United States Nuclear Regulatory Commission Official Hearing Exhibit
In the Matter of: NUCLEAR INNOVATION NORTH AMERICA LLC
(South Texas Project Units 3 and 4)
Commission Mandatory Hearing
Docket #: 05200012 & 05200013
Exhibit #: NRC-006H-MA-CM01 Identified: 11/19/2015
Admitted: 11/19/2015 Withdrawn:
Rejected: Stricken:
Other:

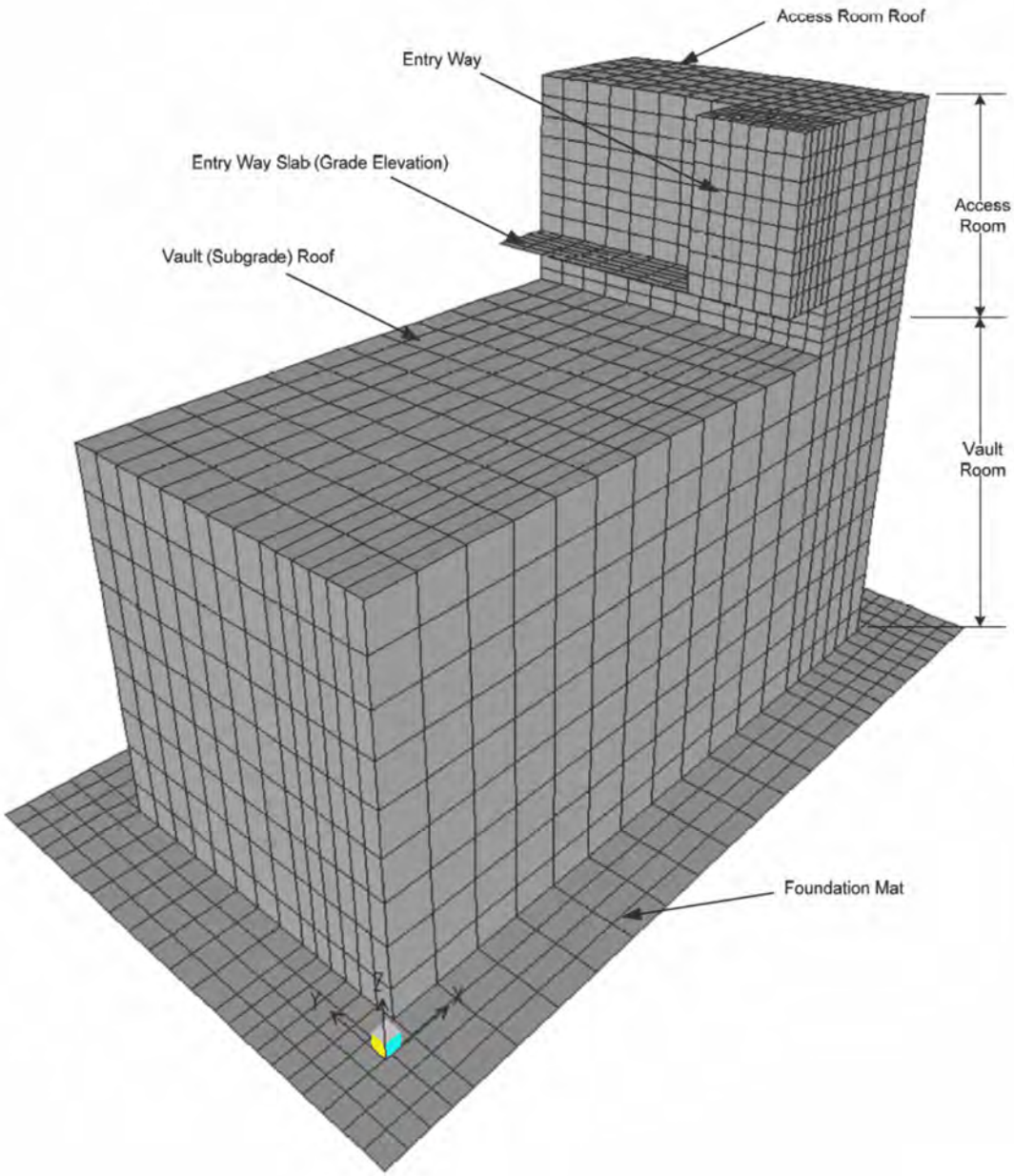

Figure 3H.6-140 DGFOSV SAP2000 Model

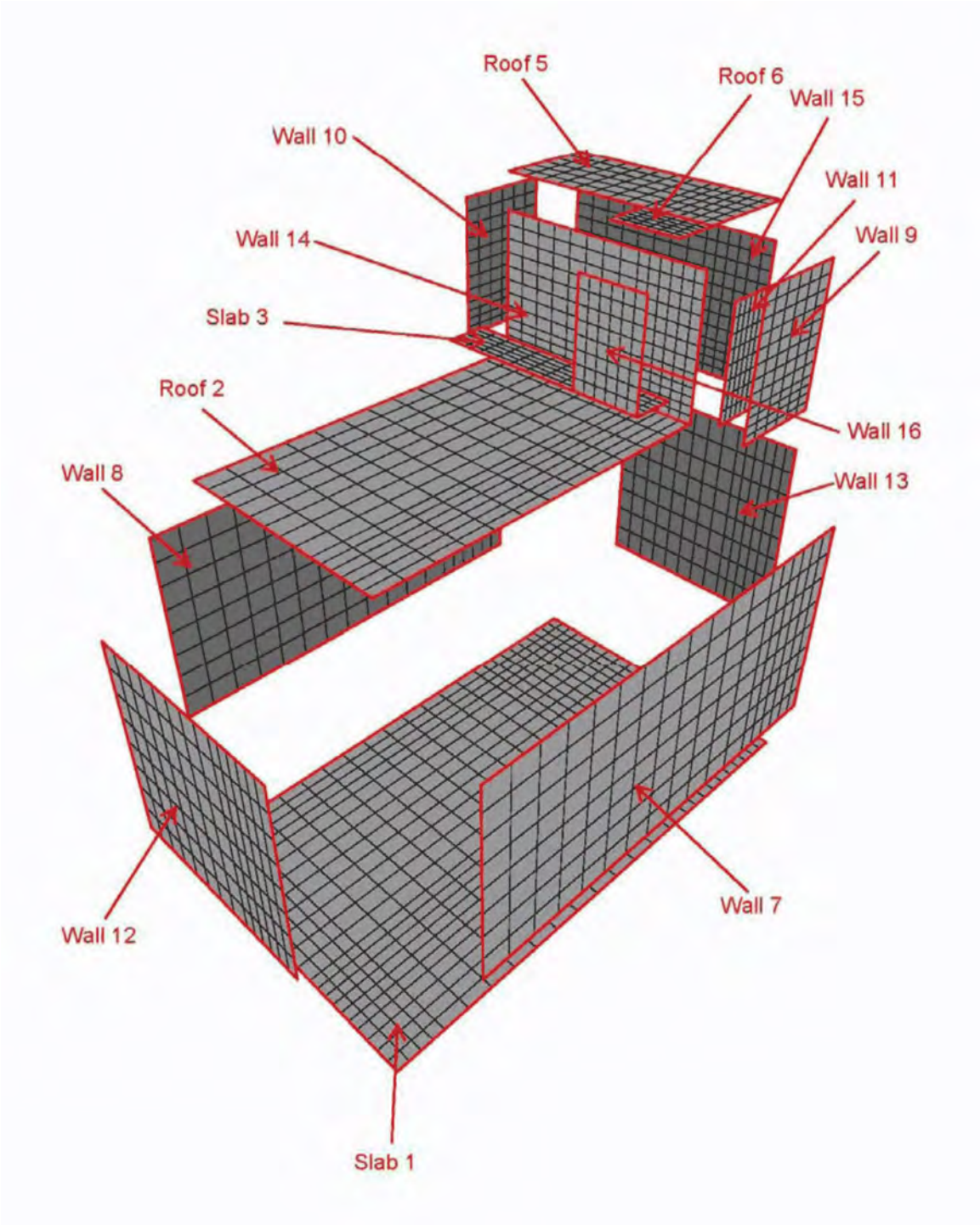

Figure 3H.6-141 DGFOSV Wall and Slab Labeling Convention

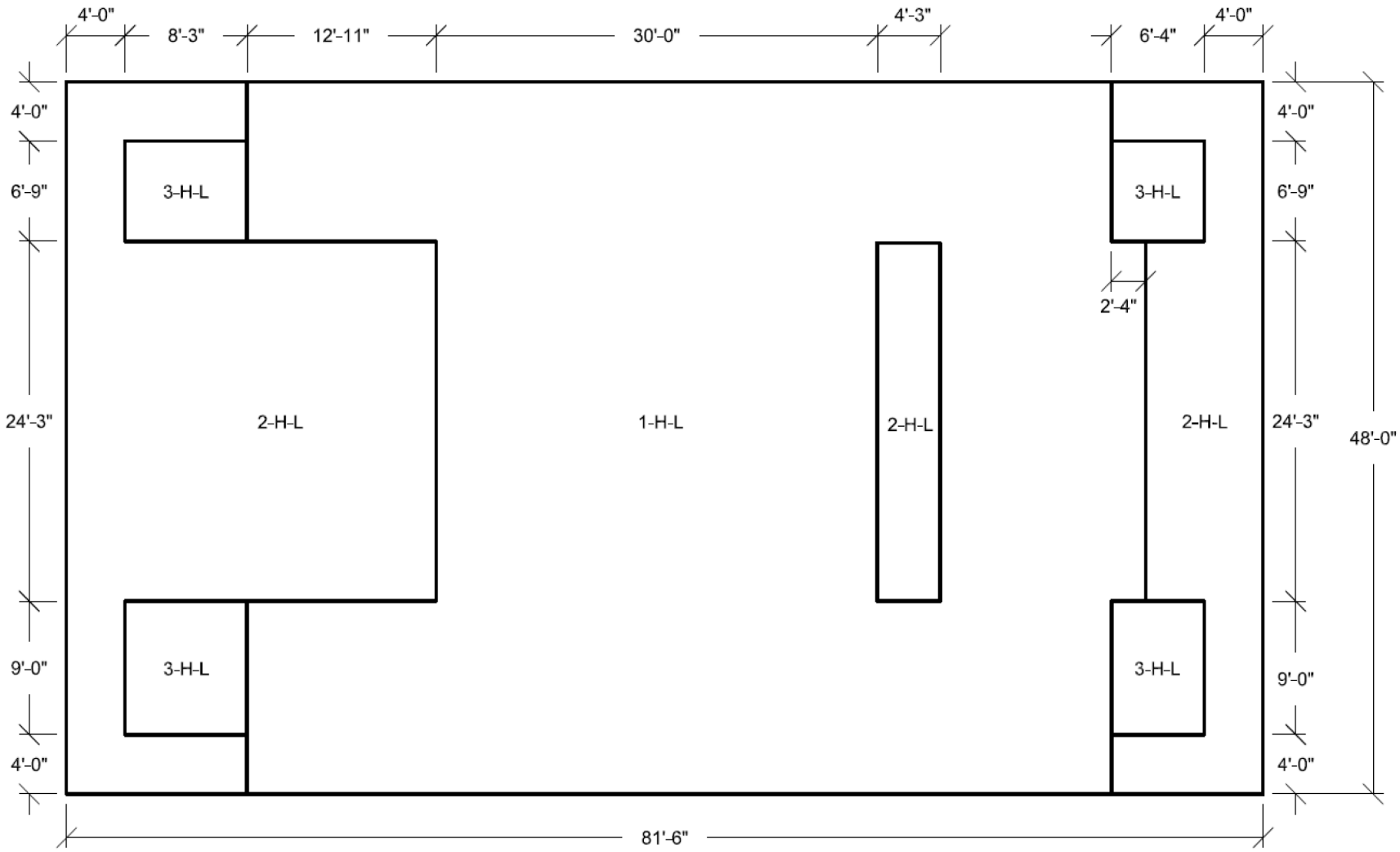

Figure 3H.6-142 DGFOSV Slab 1 Looking Down Horizontal Reinforcement Zones Near Side Face

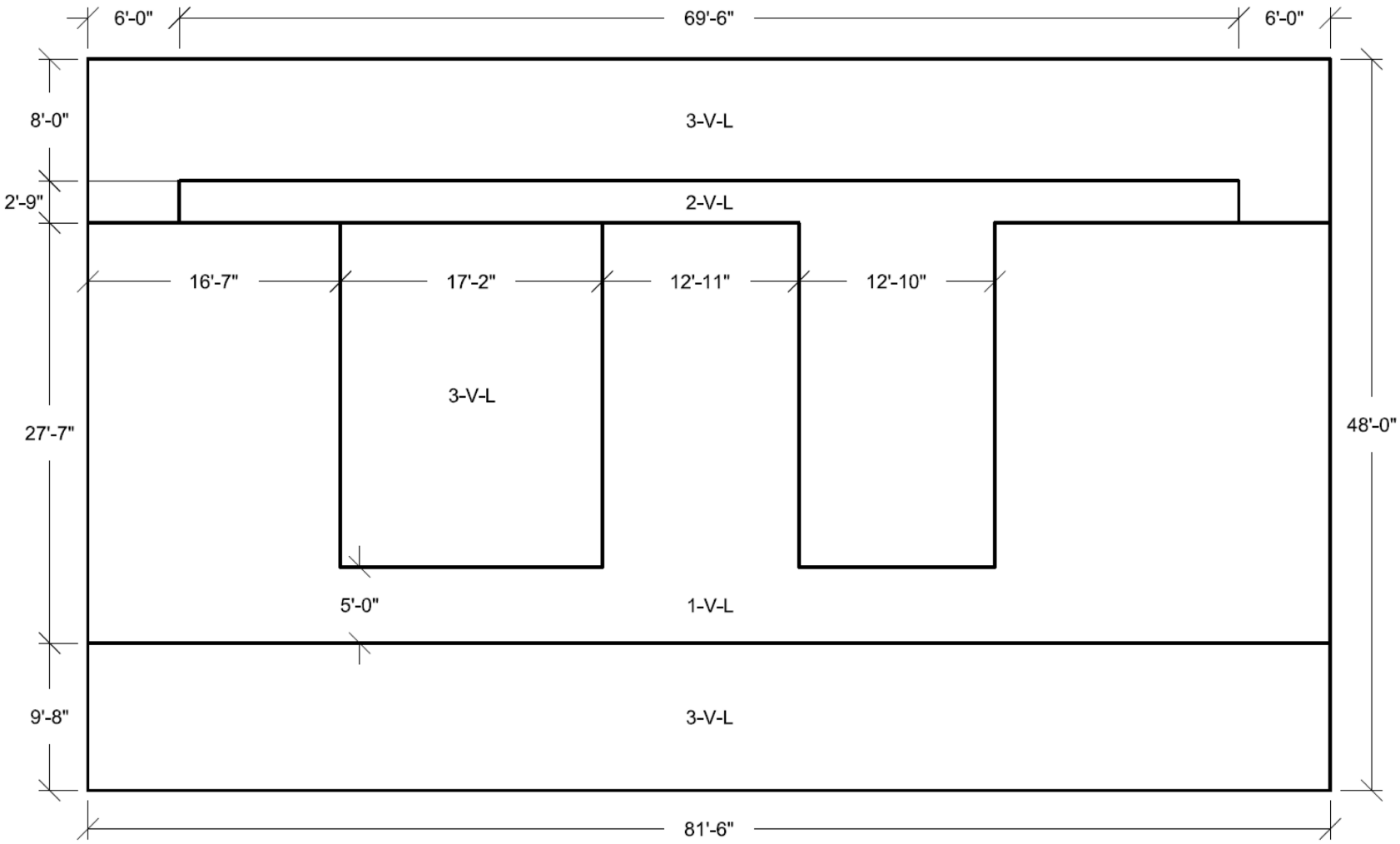

Figure 3H.6-143 DGFOSV Slab 1 Looking Down Vertical Reinforcement Zones Near Side Face

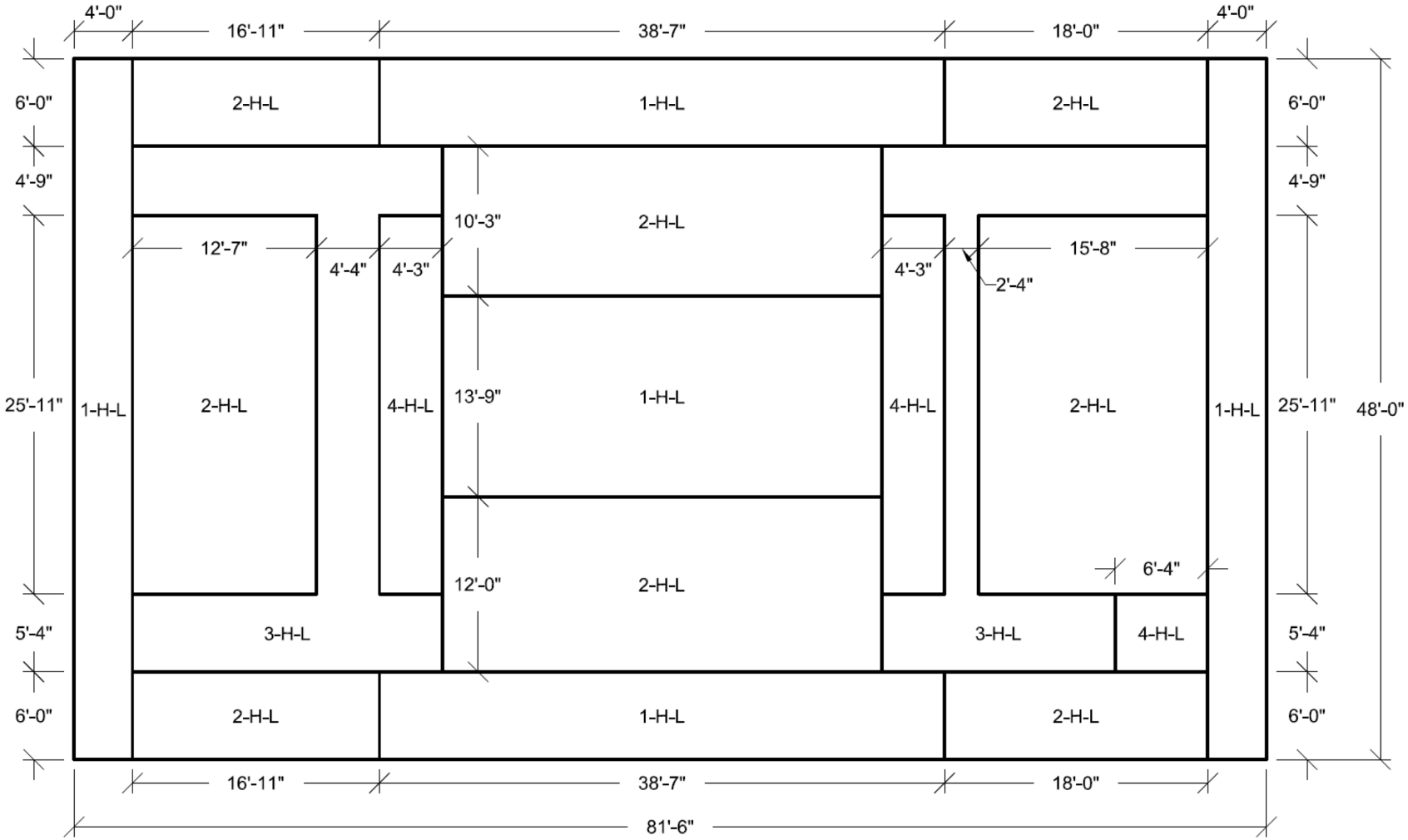

Figure 3H.6-144 DGFOSV Slab 1 Looking Down Horizontal Reinforcement Zones Far Side Face

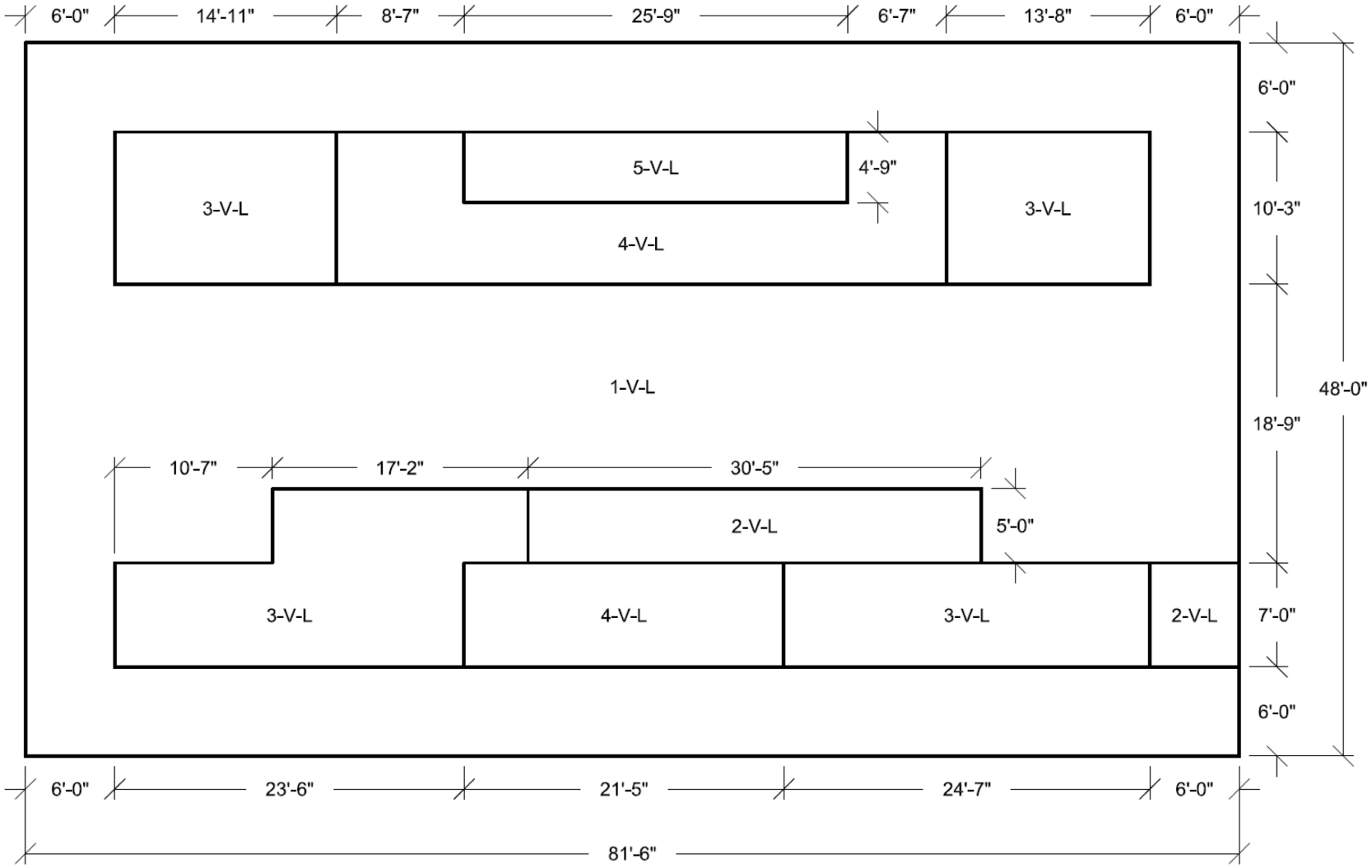

Figure 3H.6-145 DGFOSV Slab 1 Looking Down Vertical Reinforcement Zones Far Side Face

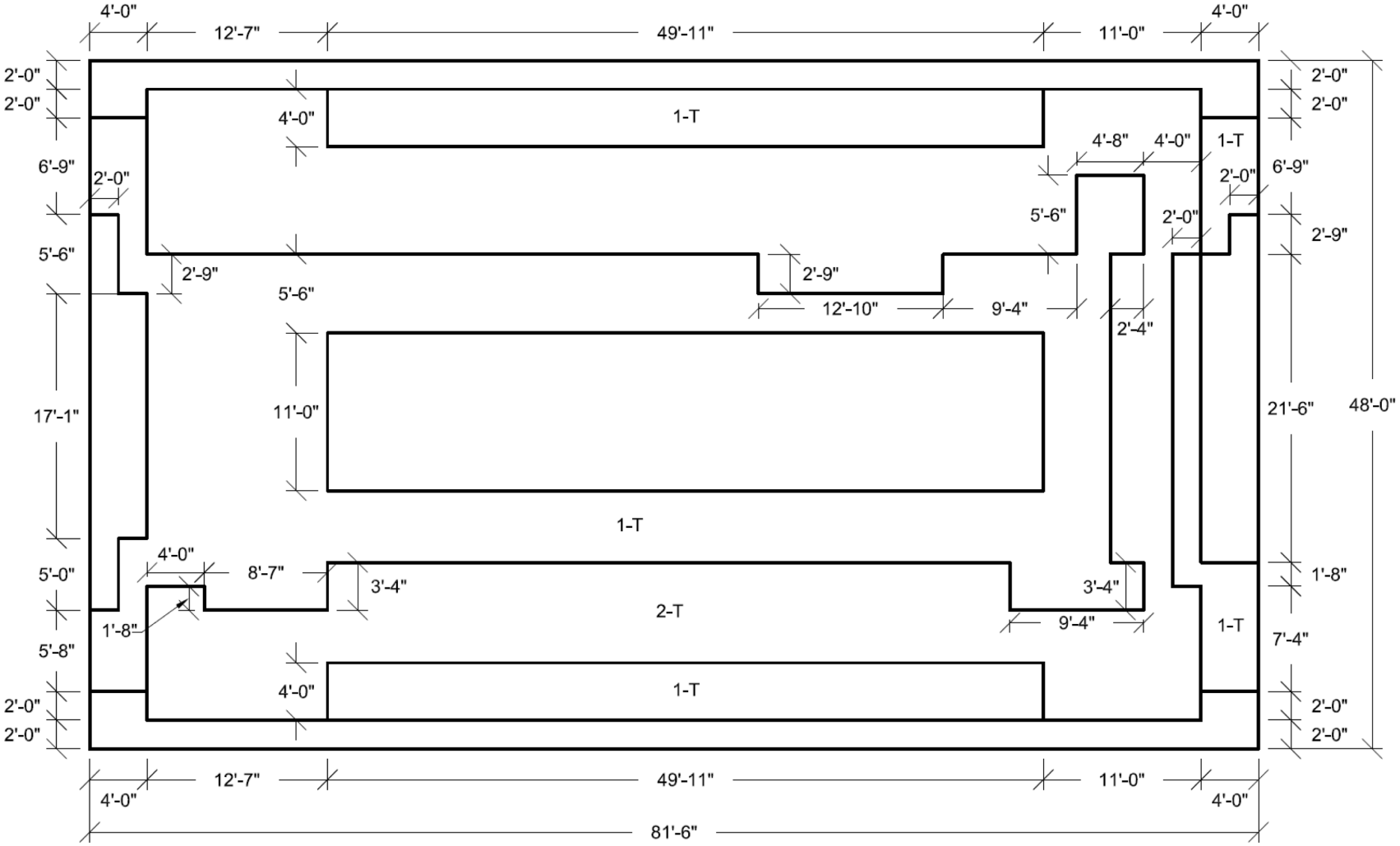

Figure 3H.6-146 DGFOSV Slab 1 Looking Down Transverse Reinforcement Zones

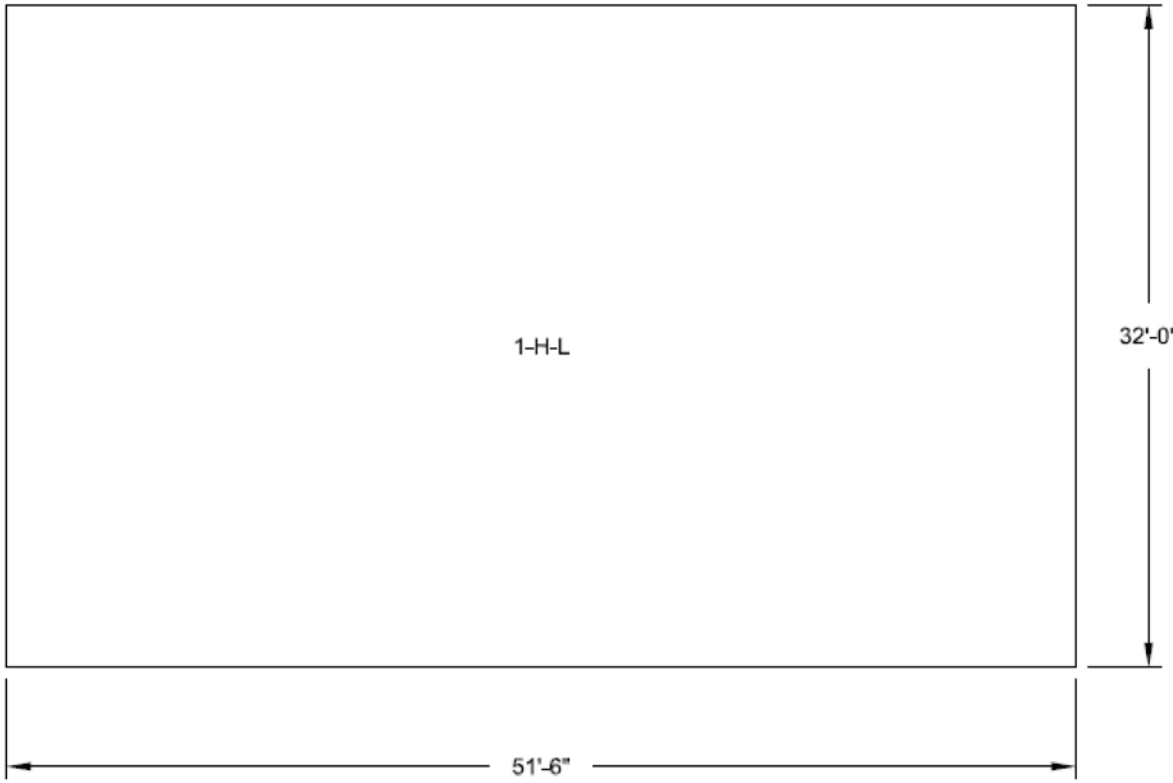

Figure 3H.6-147 DGFOSV Roof 2 Looking Down Horizontal Reinforcement Zones Near Side Face

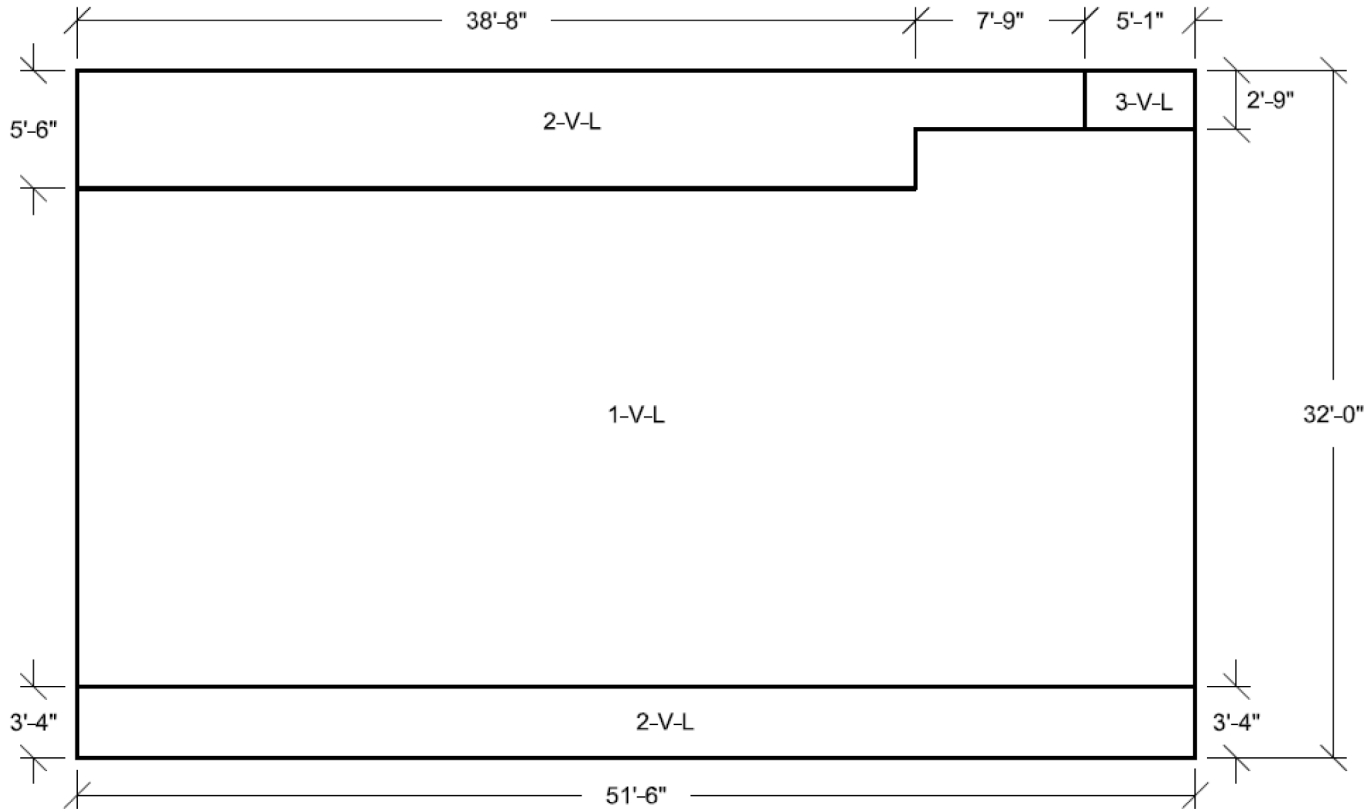

Figure 3H.6-148 DGFOSV Roof 2 Looking Down Vertical Reinforcement Zones Near Side Face

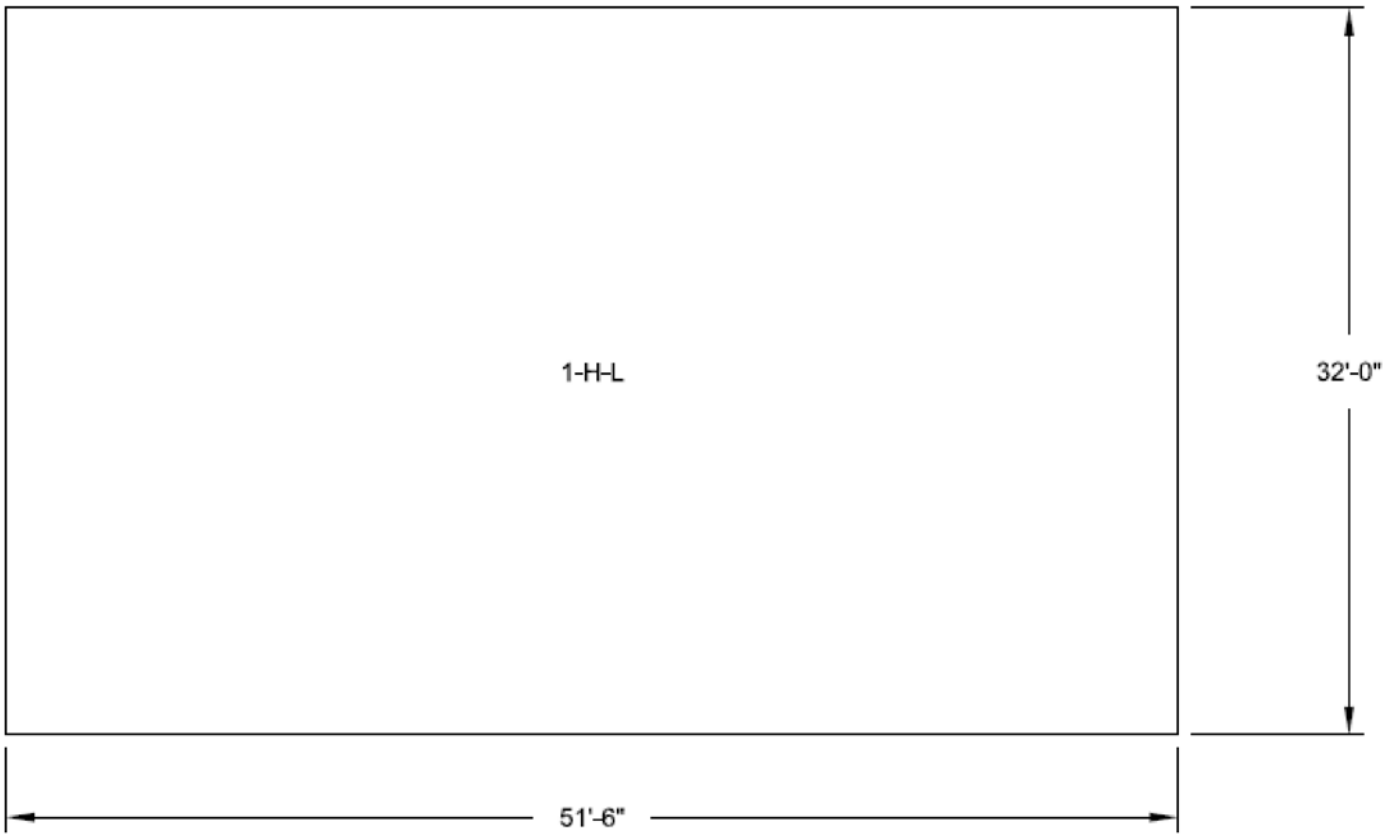

Figure 3H.6-149 DGFOSV Roof 2 Looking Down Horizontal Reinforcement Zones Far Side Face

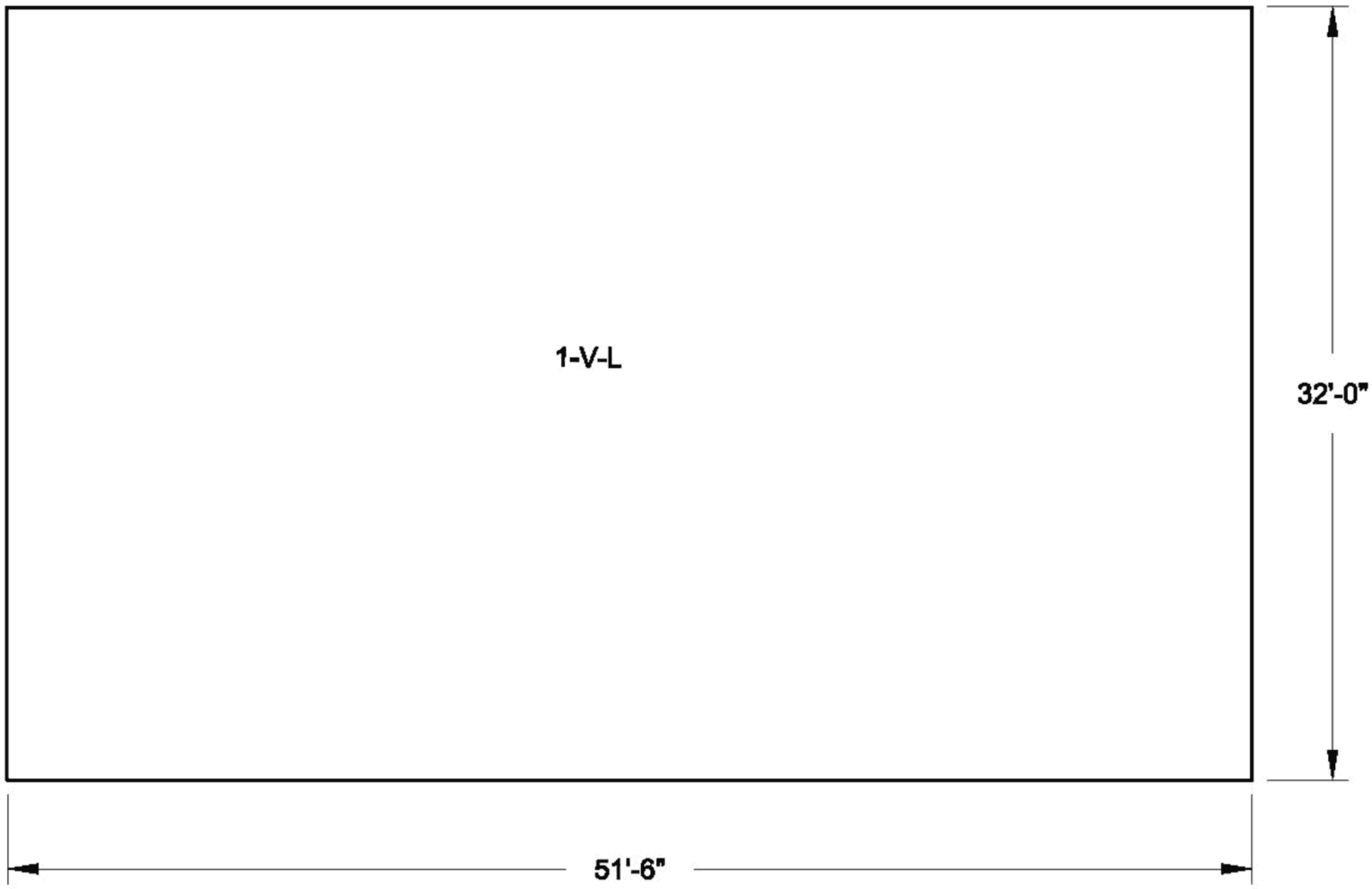

Figure 3H.6-150 DGFOSV Roof 2 Looking Down
Vertical Reinforcement Zones
Far Side Face

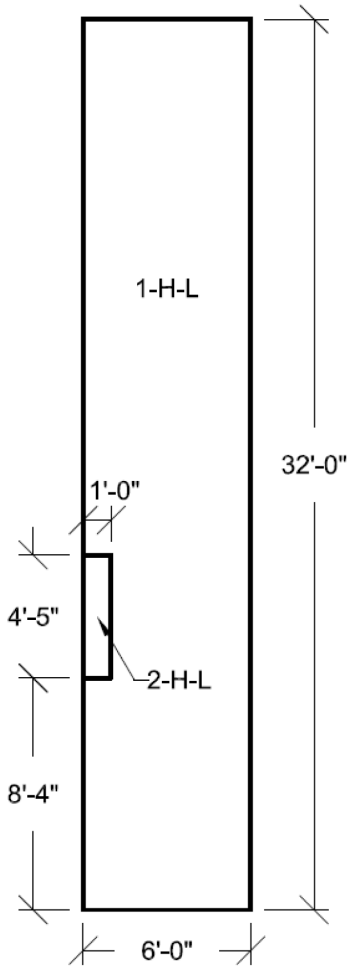

Figure 3H.6-151 DGFOSV Slab 3 Looking Down
Horizontal Reinforcement Zones
Near Side Face

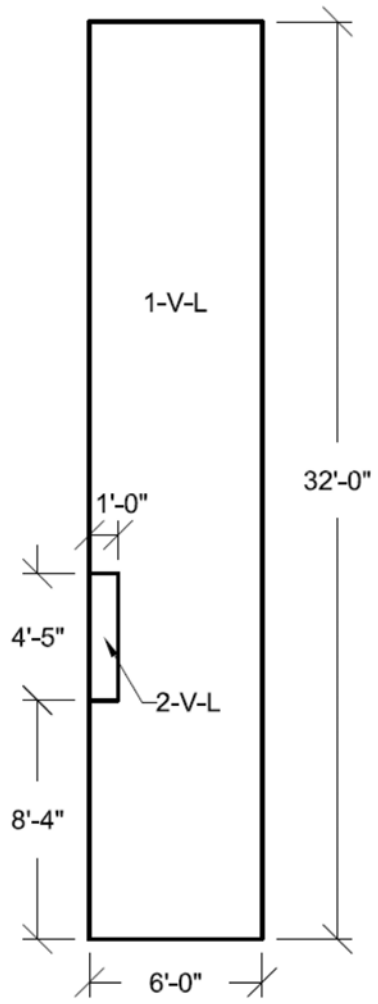

Figure 3H.6-152 DGFOSV Slab 3 Looking Down
Vertical Reinforcement Zones
Near Side Face

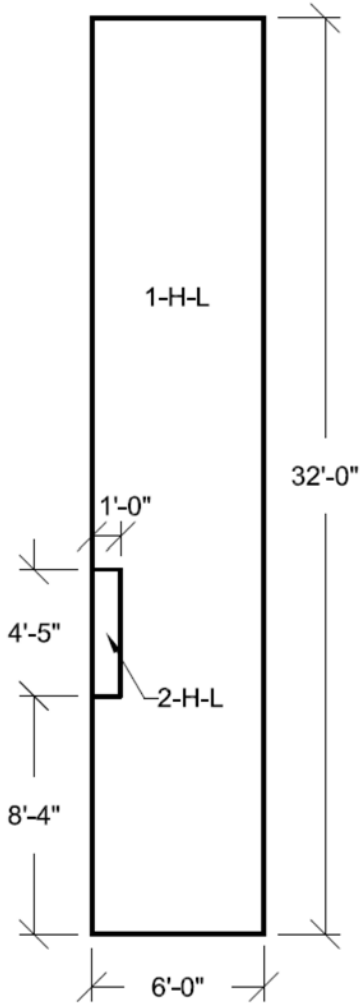

Figure 3H.6-153 DGFOSV Slab 3 Looking Down
Horizontal Reinforcement Zones
Far Side Face

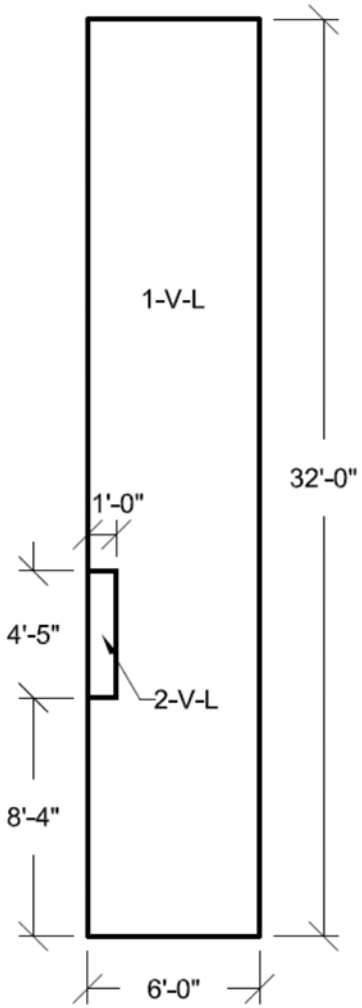

Figure 3H.6-154A DGFOSV Slab 3 Looking Down
Vertical Reinforcement Zones
Far Side Face

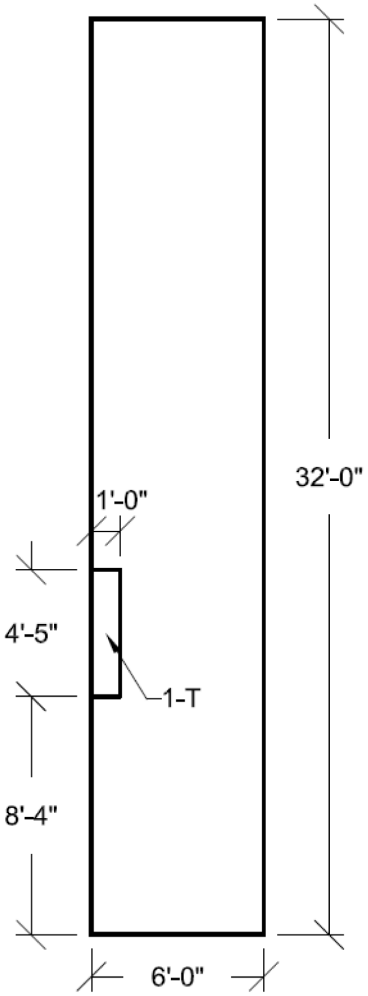

Figure 3H.6-154B DGFOSV Slab 3 Looking Down Transverse Reinforcement Zones

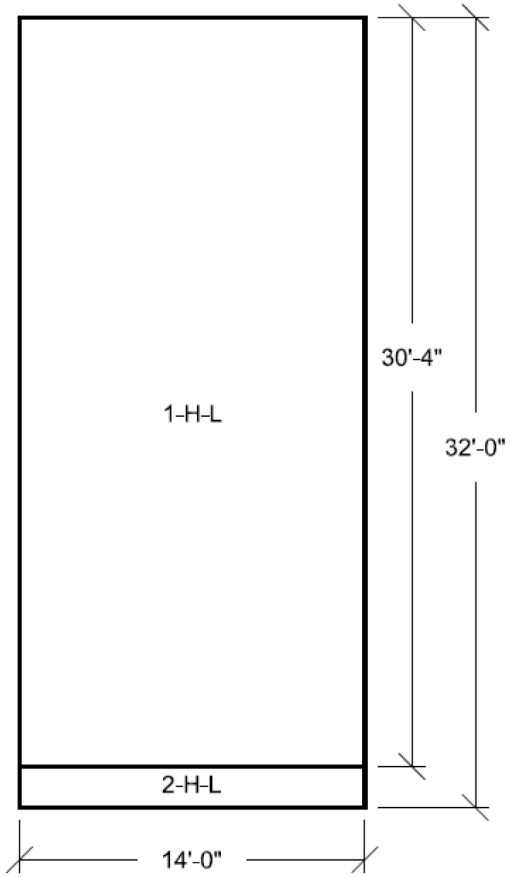

Figure 3H.6-155 DGFOSV Roof 5 Looking Down Horizontal Reinforcement Zones Near Side Face

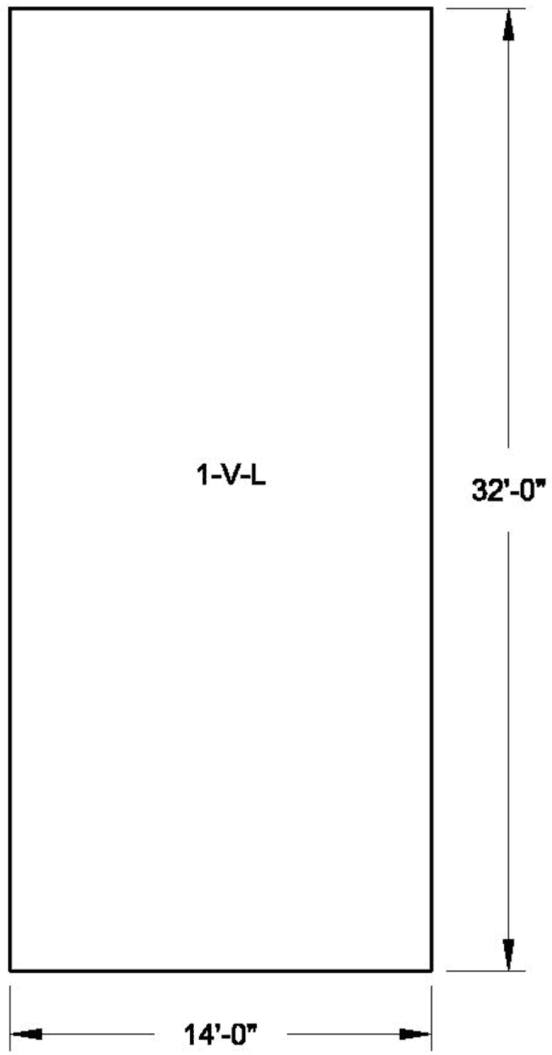

Figure 3H.6-156 DGFOSV Roof 5 Looking Down Vertical Reinforcement Zones Near Side Face

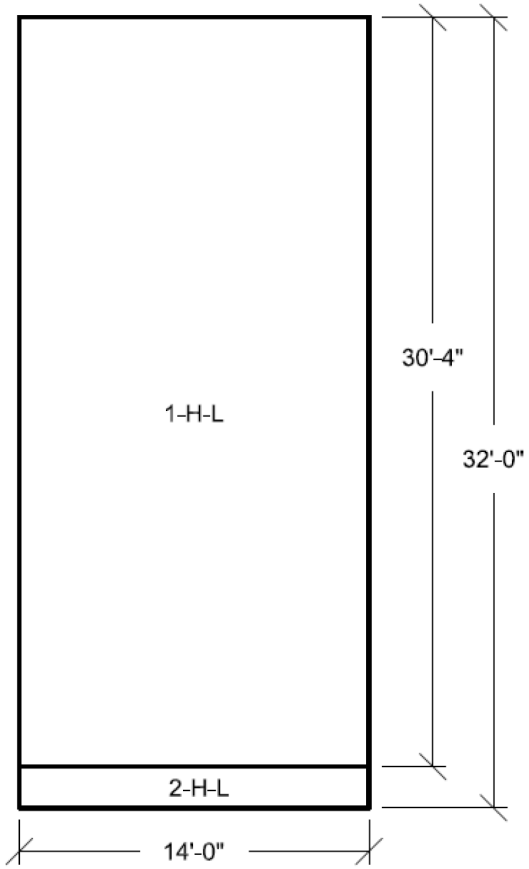

Figure 3H.6-157 DGFOSV Roof 5 Looking Down
Horizontal Reinforcement Zones
Far Side Face

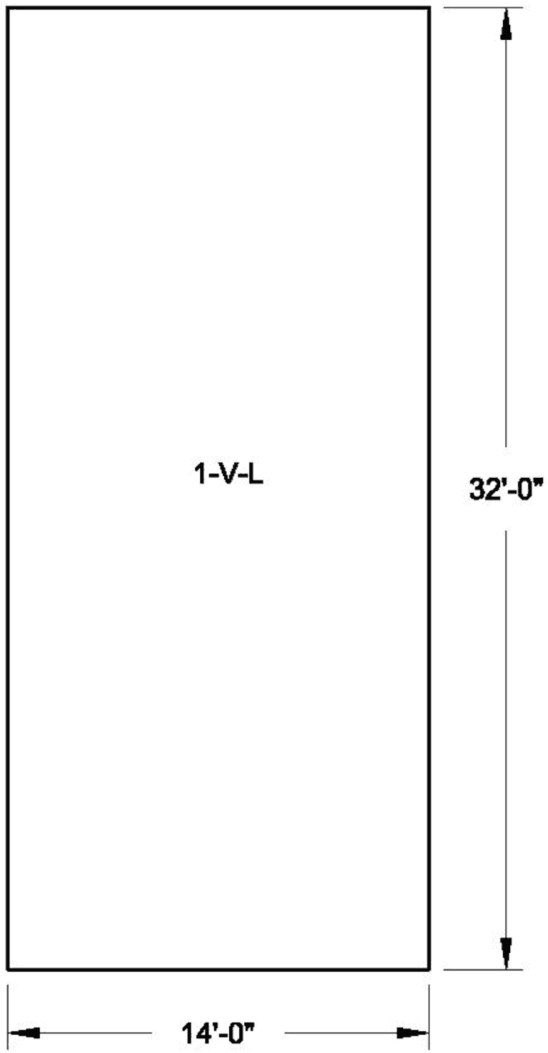

Figure 3H.6-158 DGFOSV Roof 5 Looking Down
Vertical Reinforcement Zones
Far Side Face

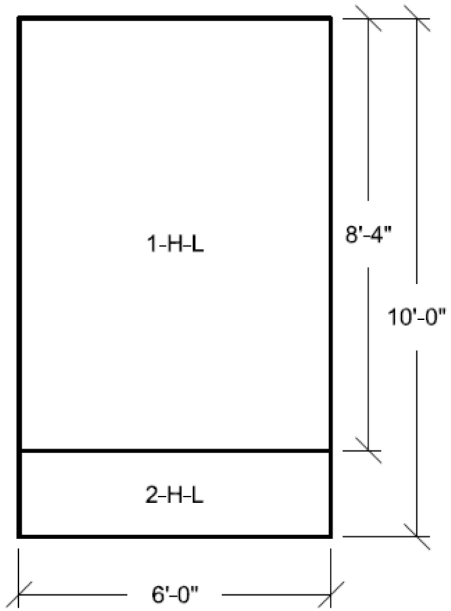

Figure 3H.6-159 DGFOSV Roof 6 Looking Down
Horizontal Reinforcement Zones
Near Side Face

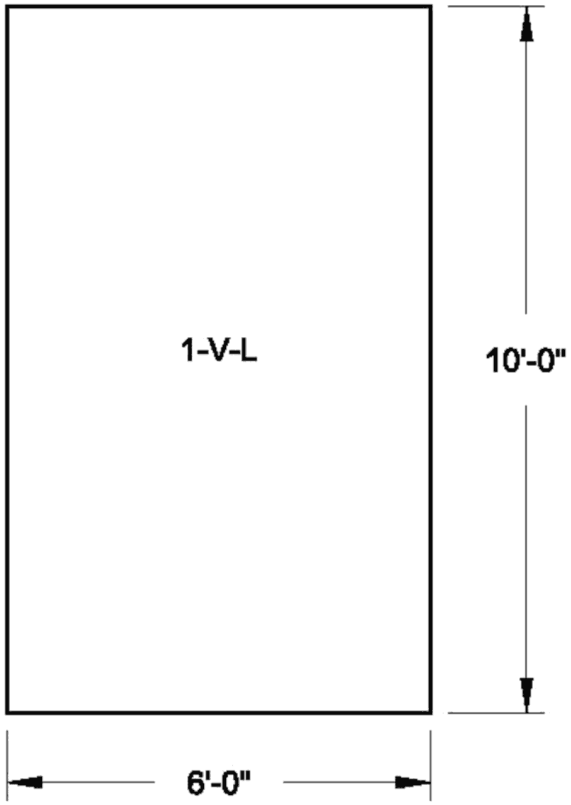

Figure 3H.6-160 DGFOSV Roof 6 Looking Down
Vertical Reinforcement Zones
Near Side Face

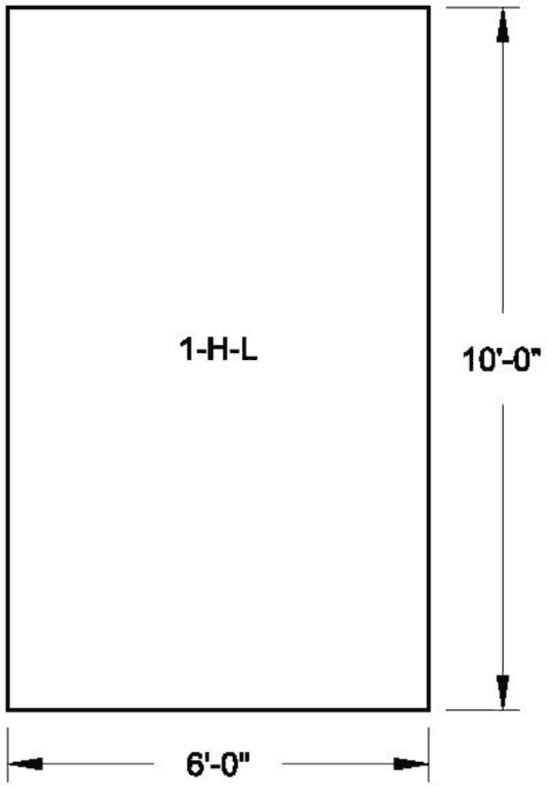

Figure 3H.6-161 DGFOSV Roof 6 Looking Down
Horizontal Reinforcement Zones
Far Side Face

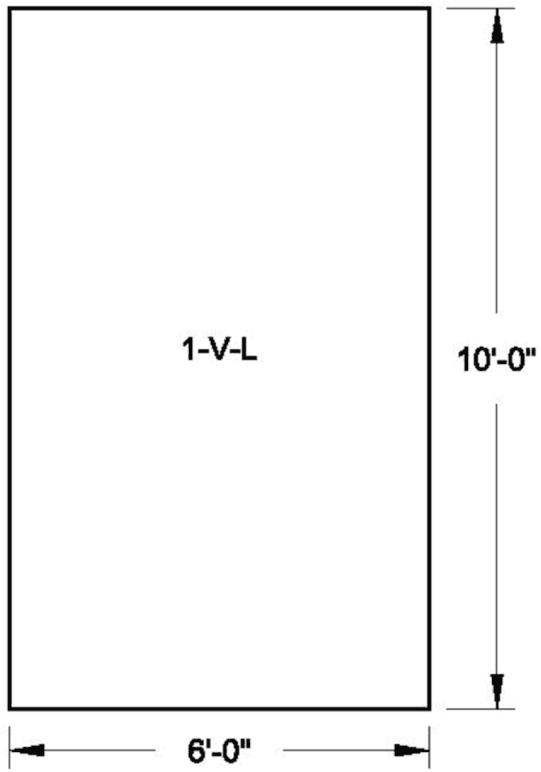

Figure 3H.6-162 DGFOSV Roof 6 Looking Down
Vertical Reinforcement Zones
Far Side Face

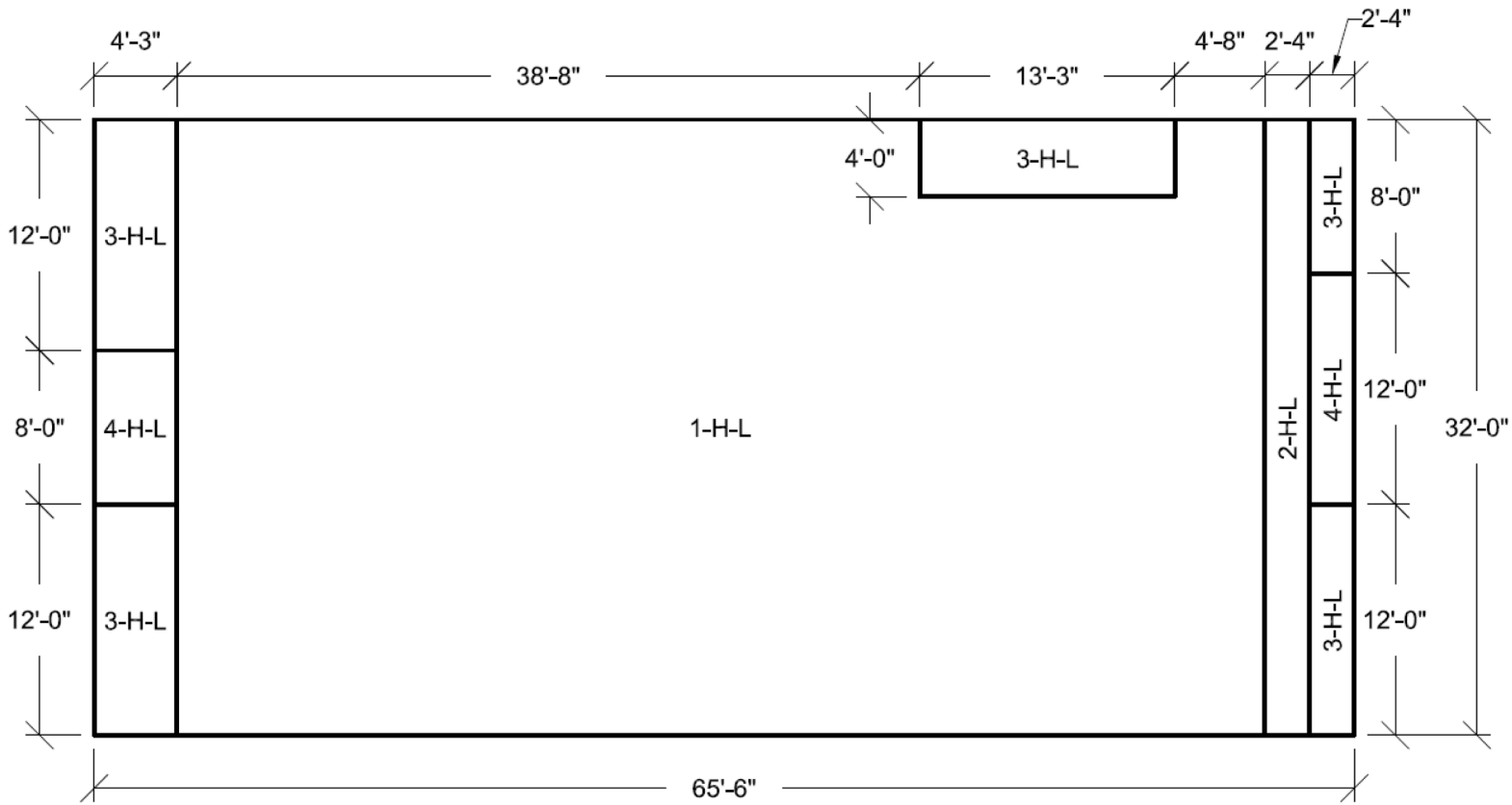

Figure 3H.6-163 DGFOSV Wall 7 Looking From Outside Horizontal Reinforcement Zones Near Side Face

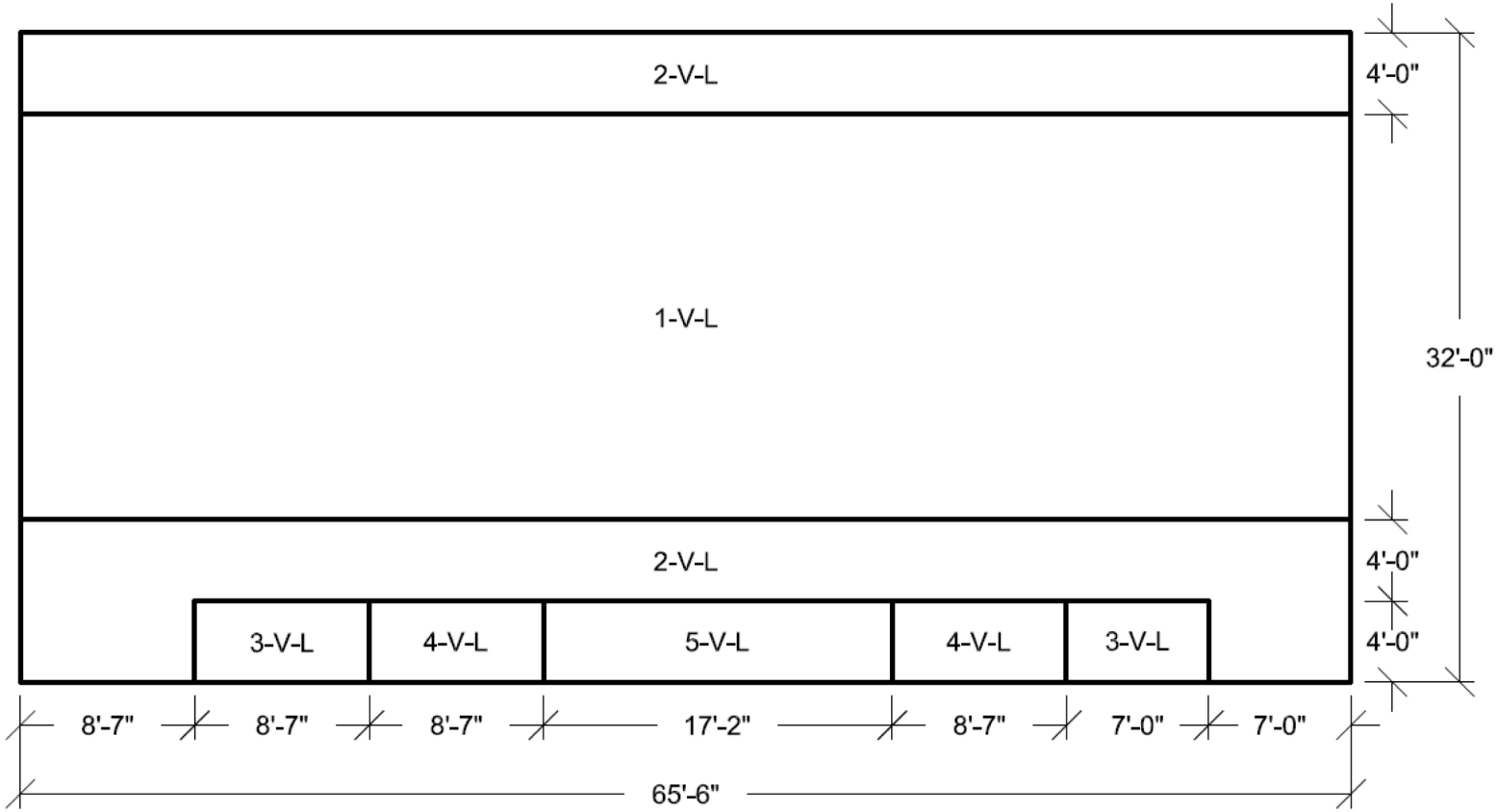

Figure 3H.6-164 DGFOSV Wall 7 Looking From Outside
Vertical Reinforcement Zones
Near Side Face

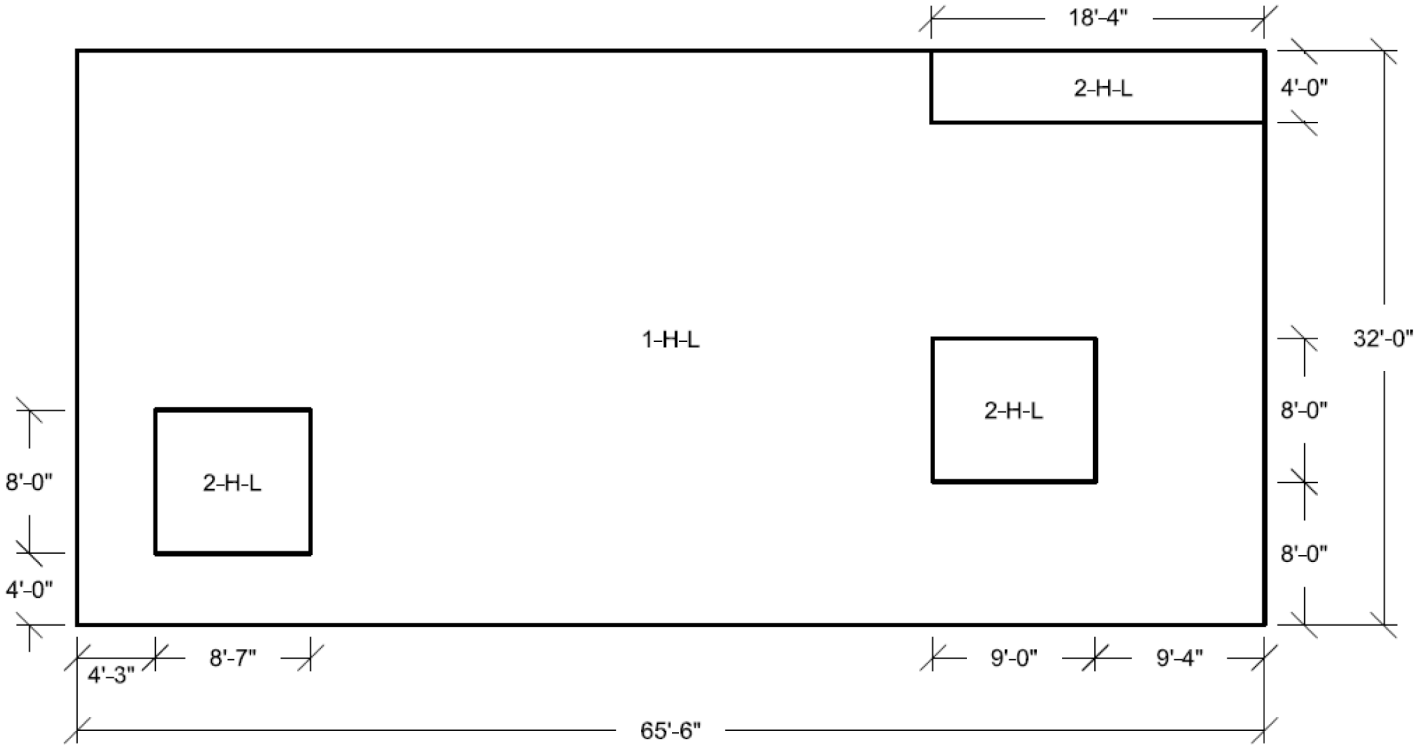

Figure 3H.6-165 DGFOSV Wall 7 Looking From Outside
Horizontal Reinforcement Zones
Far Side Face

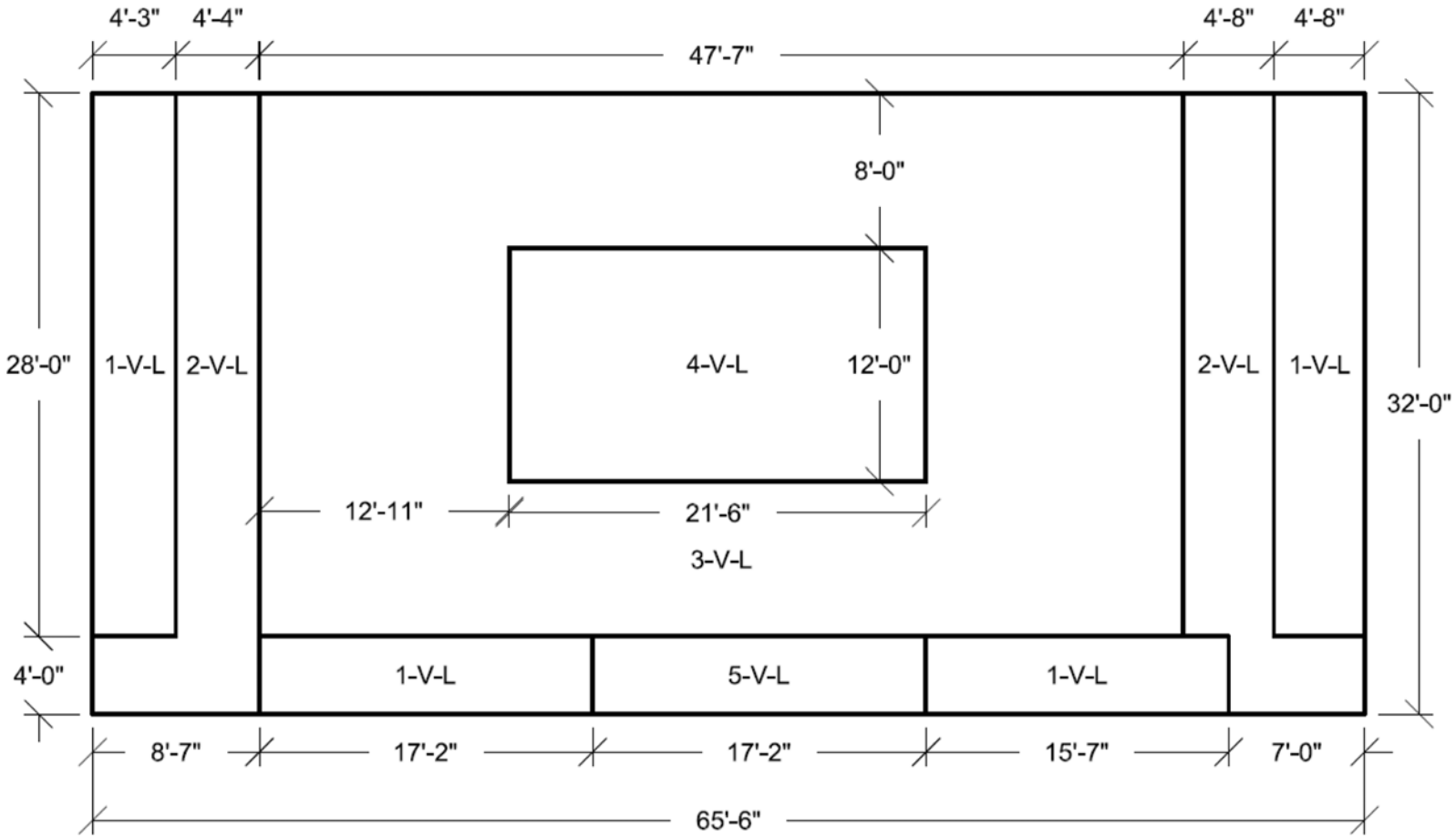

Figure 3H.6-166 DGFOSV Wall 7 Looking From Outside
Vertical Reinforcement Zones
Far Side Face

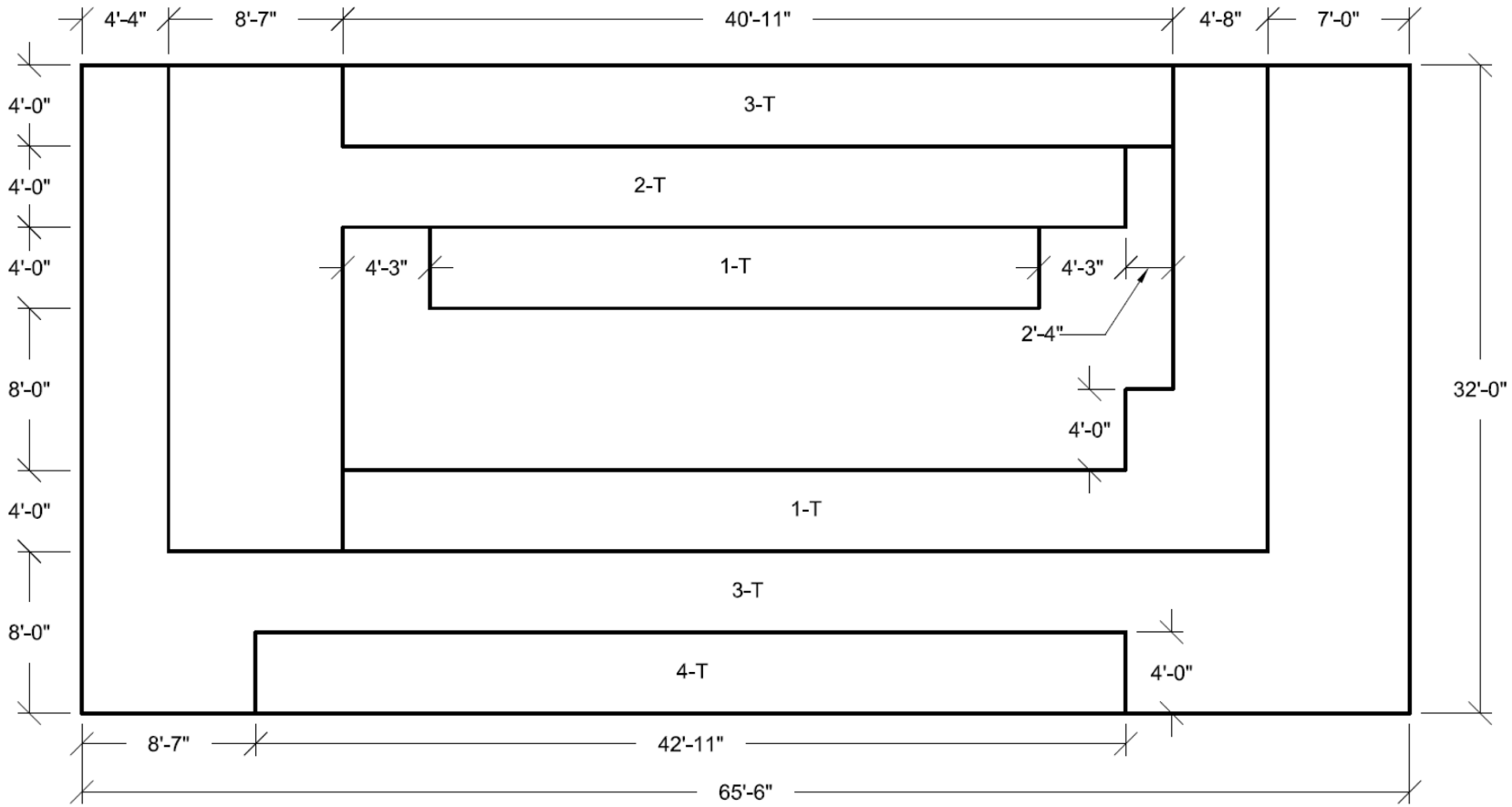

Figure 3H.6-167 DGFOSV Wall 7 Looking From Outside Transverse Reinforcement Zones

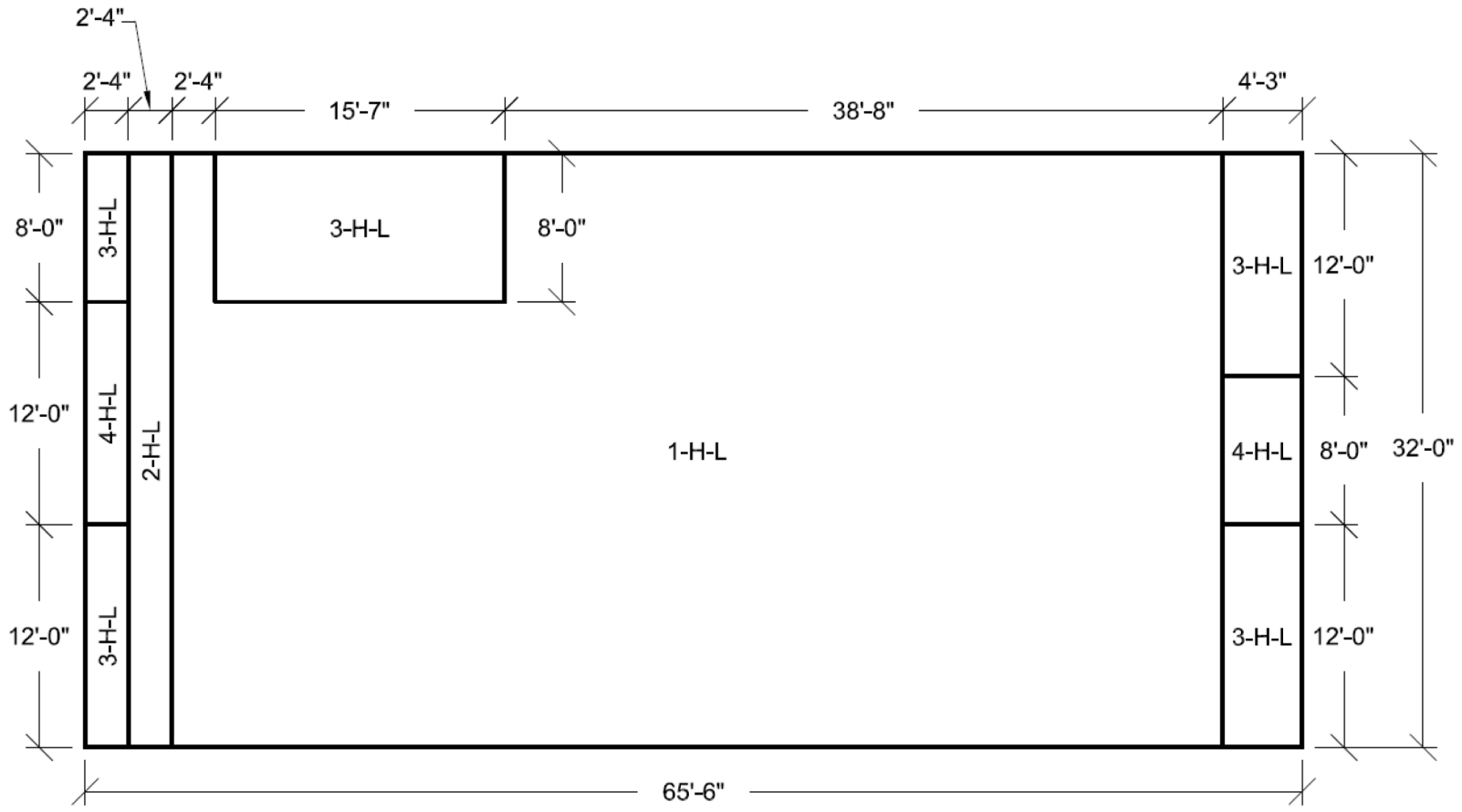

Figure 3H.6-168 DGFOSV Wall 8 Looking From Outside
Horizontal Reinforcement Zones
Near Side Face

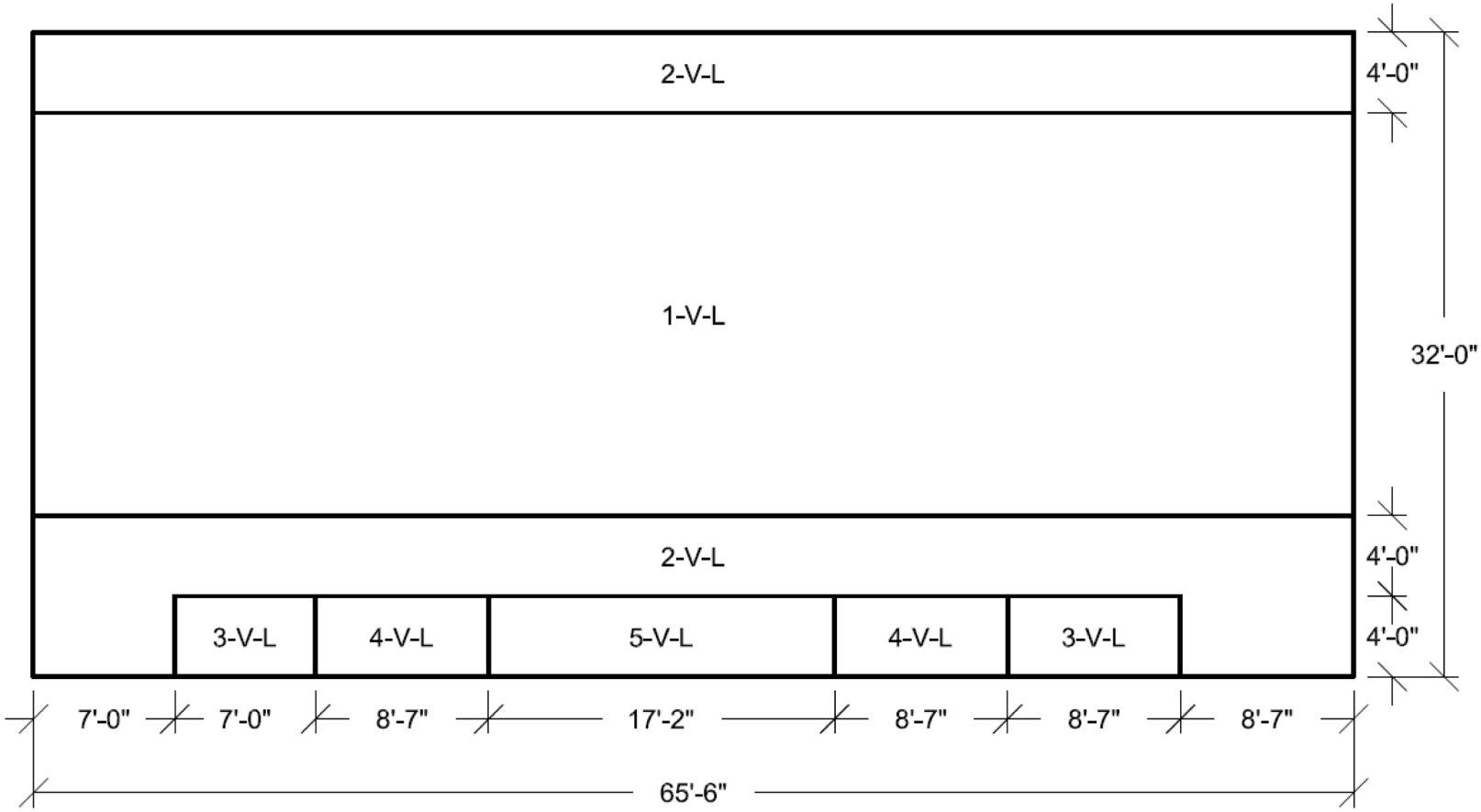

Figure 3H.6-169 DGFOSV Wall 8 Looking From Outside
Vertical Reinforcement Zones
Near Side Face

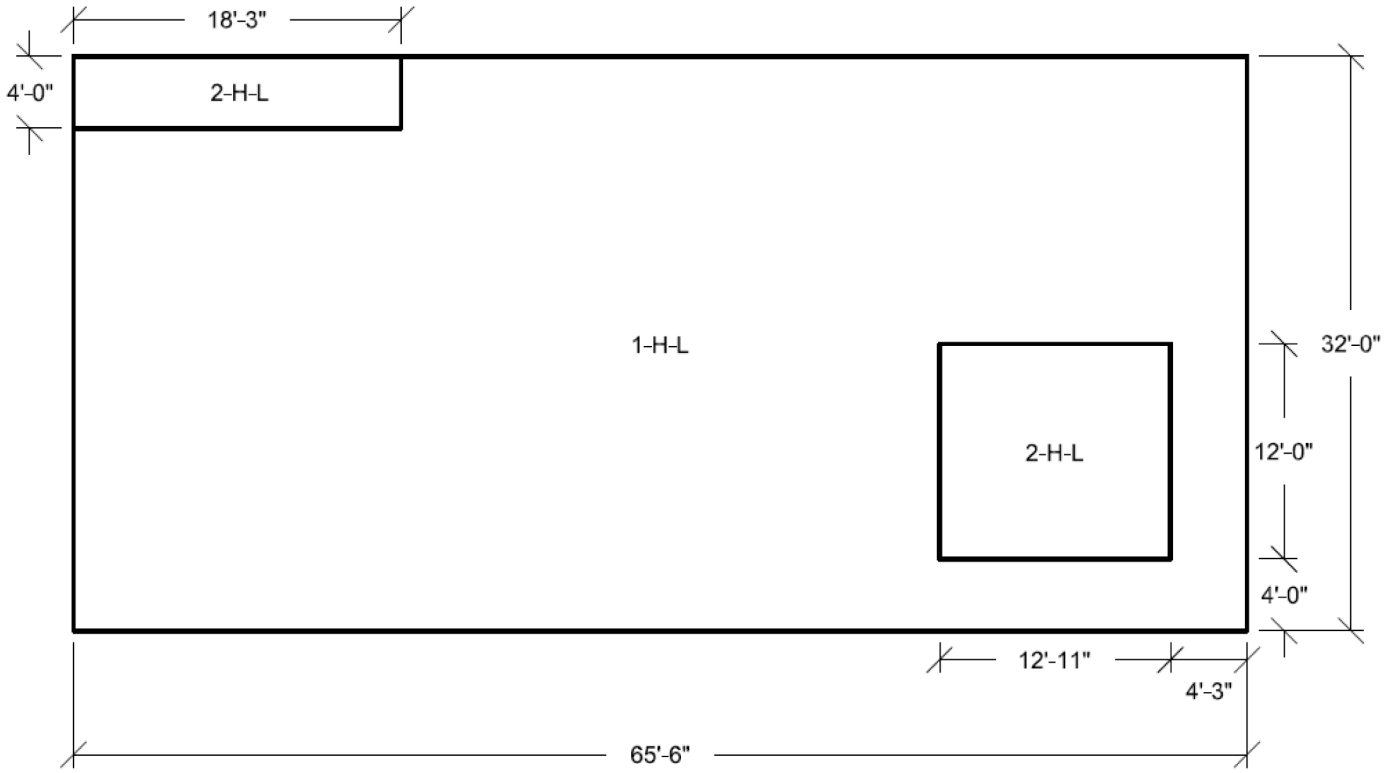

Figure 3H.6-170 DGFOSV Wall 8 Looking From Outside Horizontal Reinforcement Zones Far Side Face

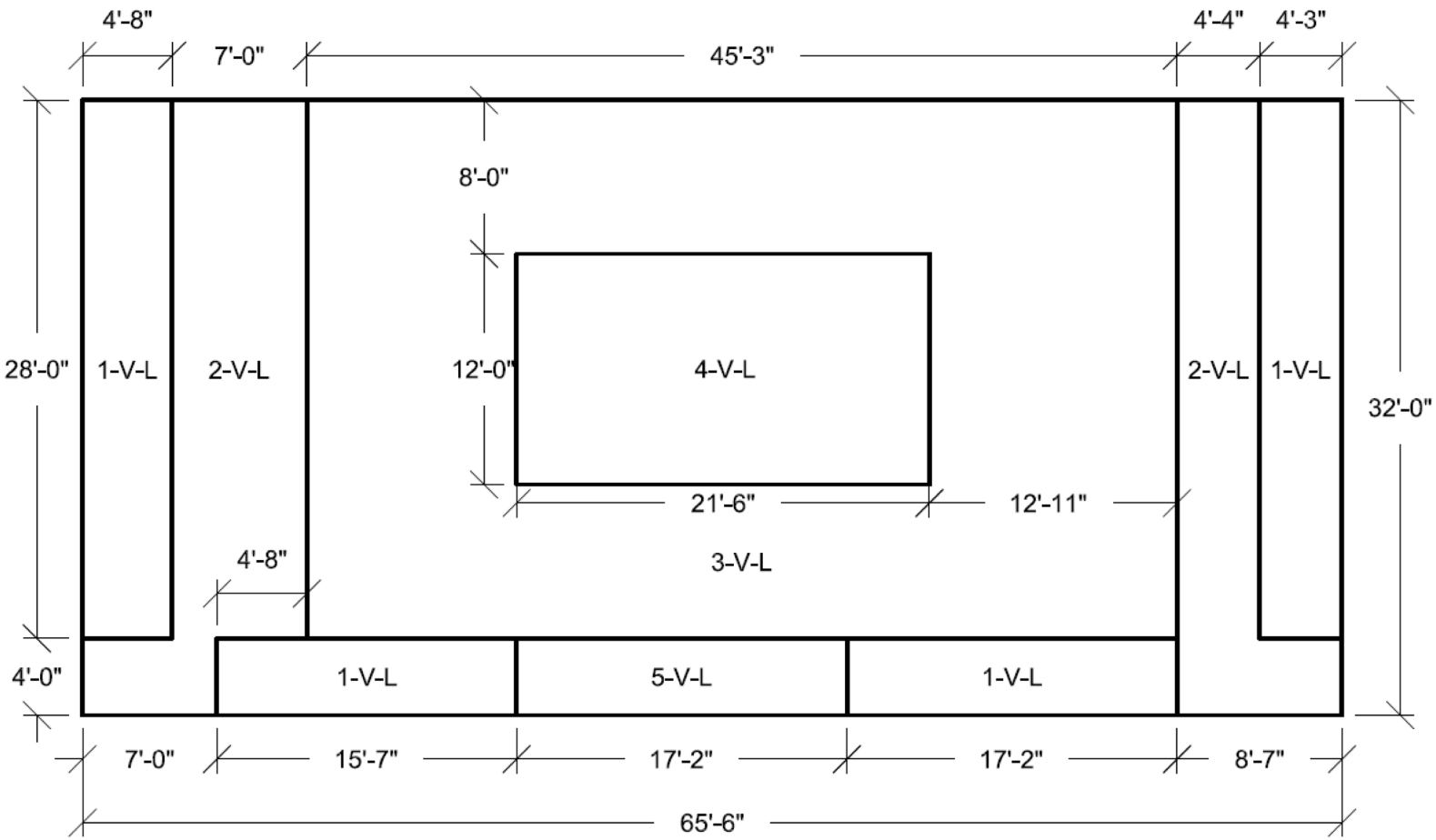

Figure 3H.6-171 DGFOSV Wall 8 Looking From Outside
Vertical Reinforcement Zones
Far Side Face

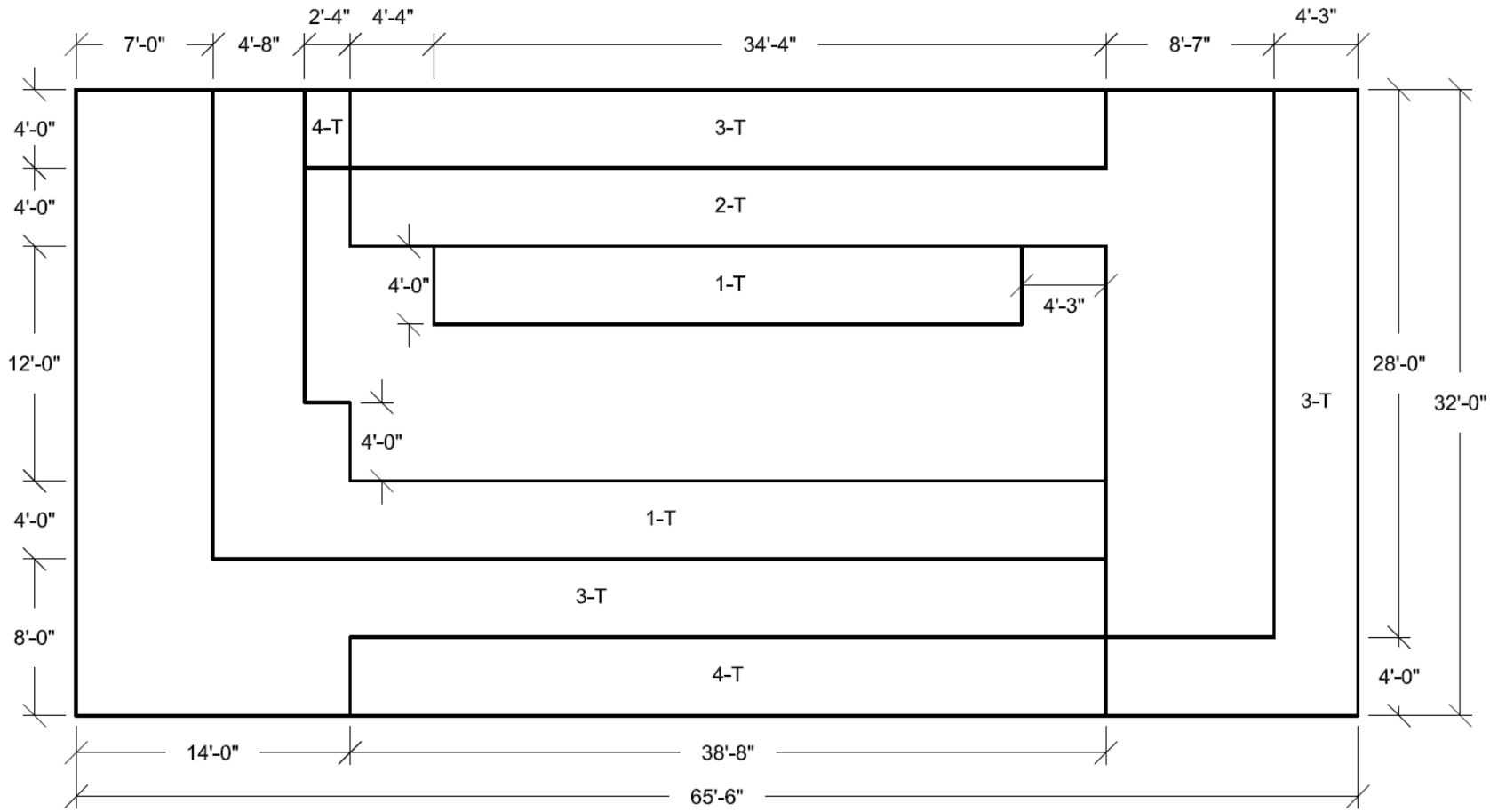

Figure 3H.6-172 DGFOSV Wall 8 Looking From Outside Transverse Reinforcement Zones

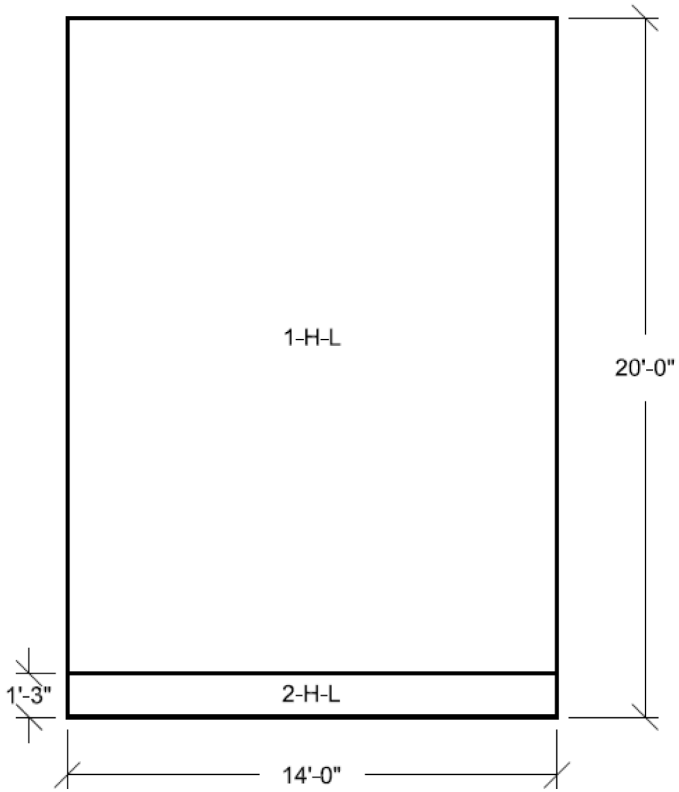

Figure 3H.6-173 DGFOSV Wall 9 Looking From Outside Horizontal Reinforcement Zones Near Side Face

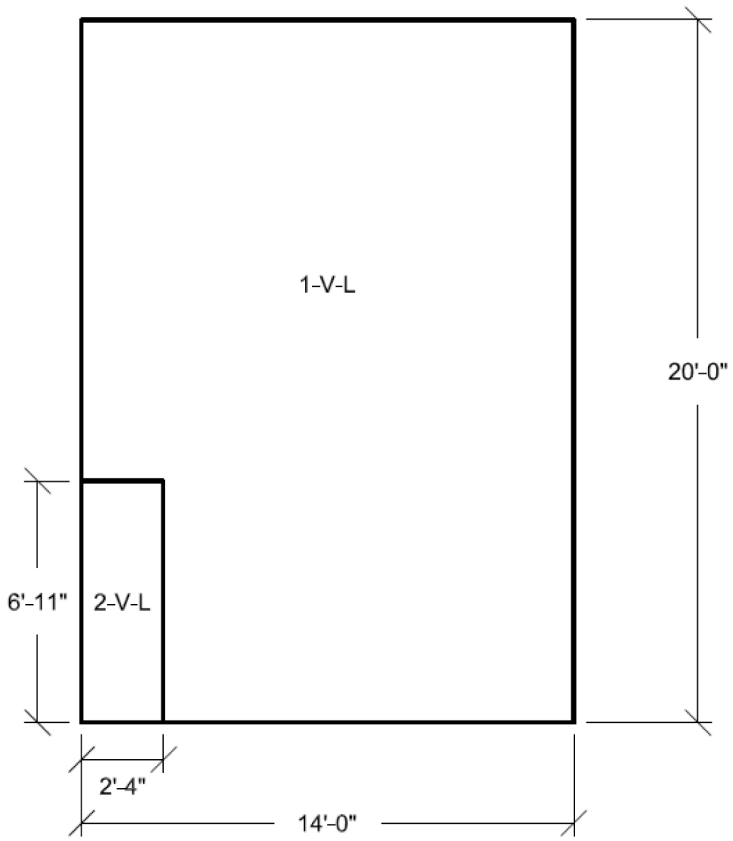

Figure 3H.6-174 DGFOSV Wall 9 Looking From Outside Vertical Reinforcement Zones Near Side Face

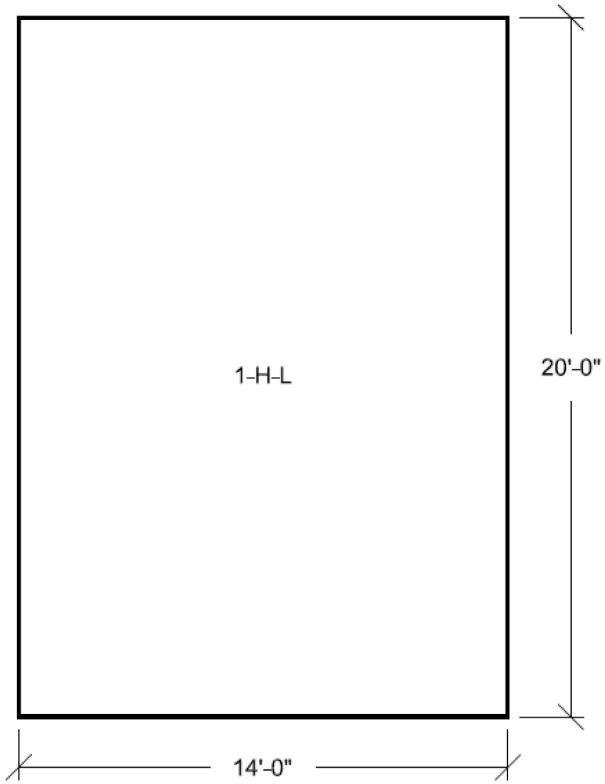

Figure 3H.6-175 DGFOSV Wall 9 Looking From Outside Horizontal Reinforcement Zones Far Side Face

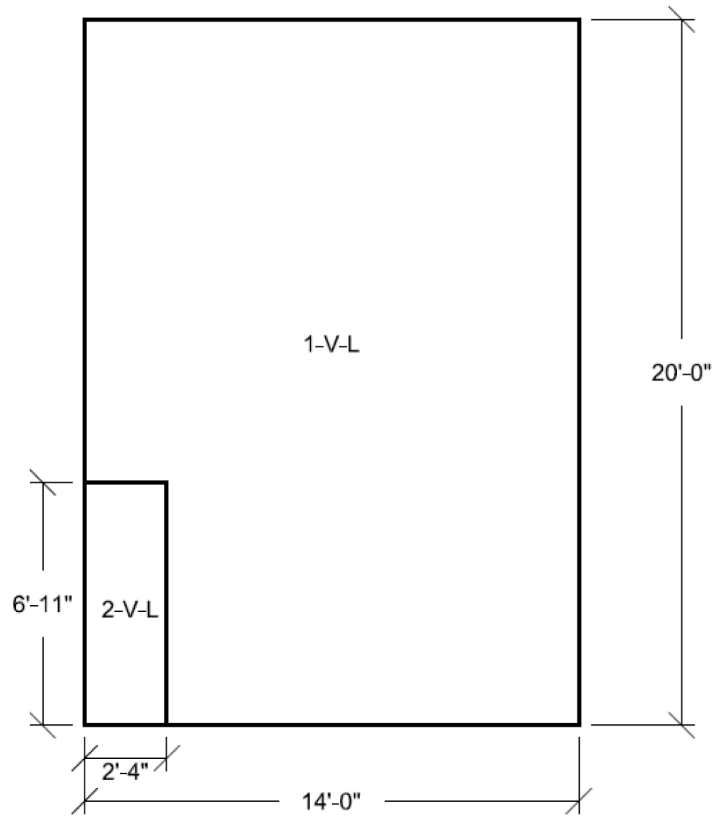

Figure 3H.6-176A DGFOSV Wall 9 Looking From Outside Vertical Reinforcement Zone Far Side Face

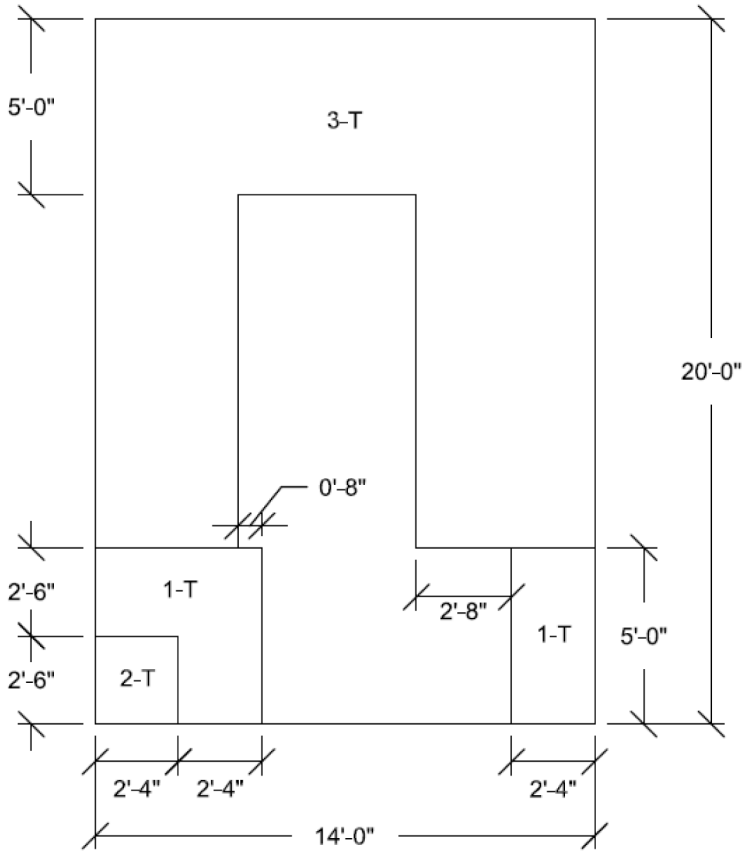

Figure 3H.6-176B DGFOSV Wall 9 Looking From Outside Transverse Reinforcement Zone

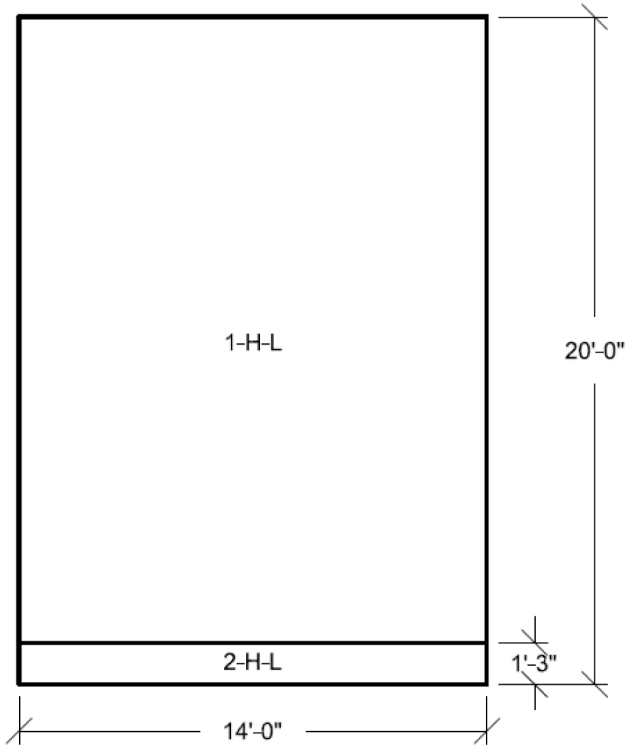

Figure 3H.6-177 DGFOSV Wall 10 Looking From Outside Horizontal Reinforcement Zones Near Side Face

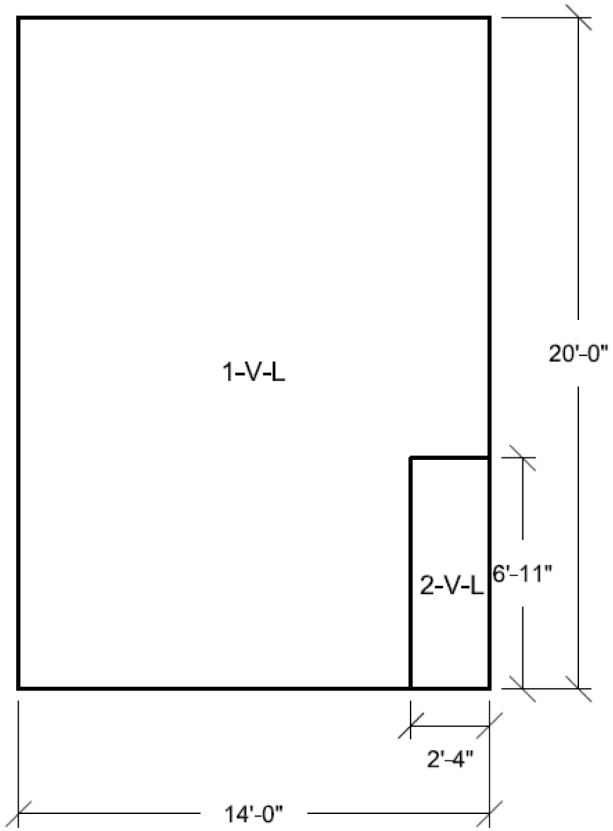

Figure 3H.6-178 DGFOSV Wall 10 Looking From Outside Vertical Reinforcement Zones Near Side Face

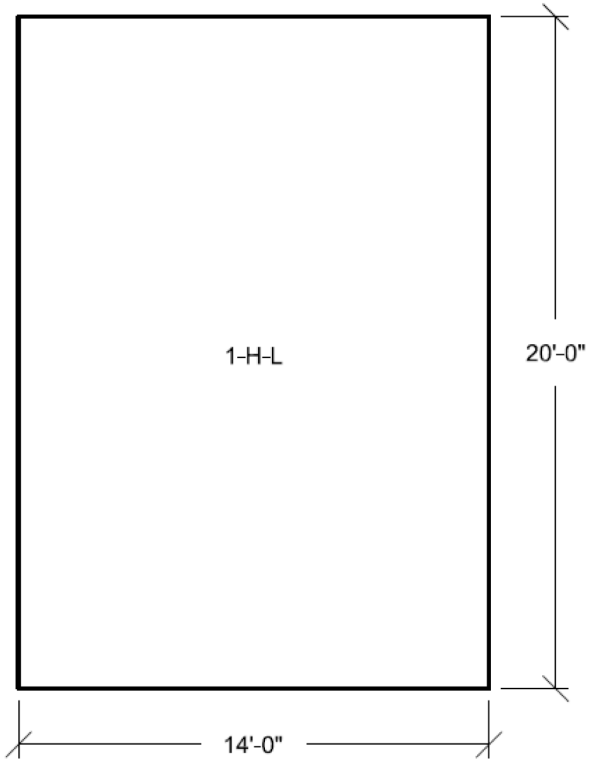

Figure 3H.6-179 DGFOSV Wall 10 Looking From Outside Horizontal Reinforcement Zones Far Side Face

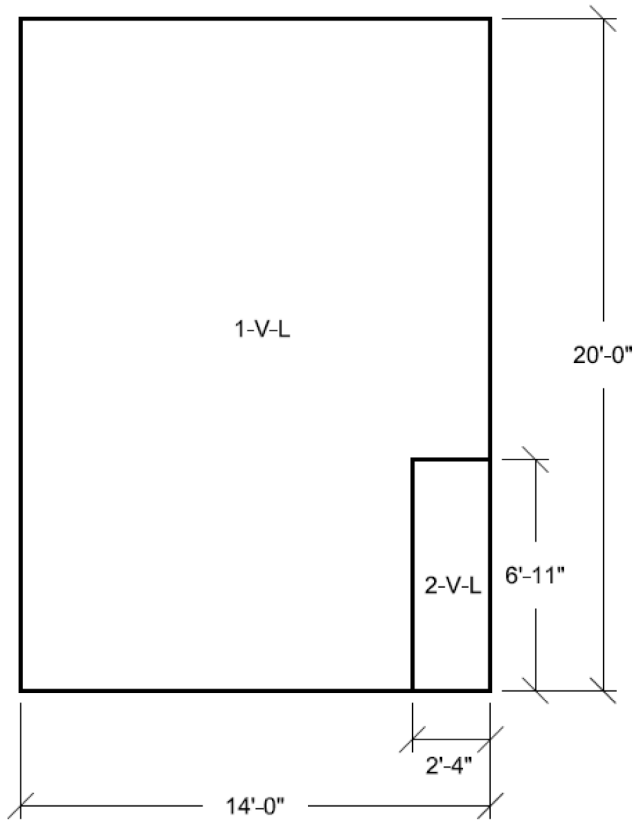

Figure 3H.6-180A DGFOSV Wall 10 Looking From Outside Vertical Reinforcement Zones Far Side Face

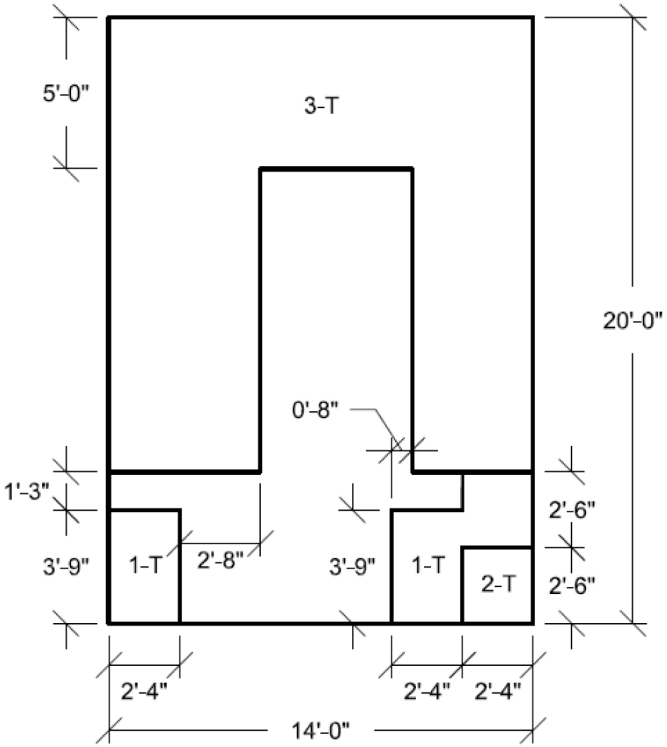

Figure 3H.6-180B DGFOSV Wall 10 Looking From Outside Transverse Reinforcement Zones

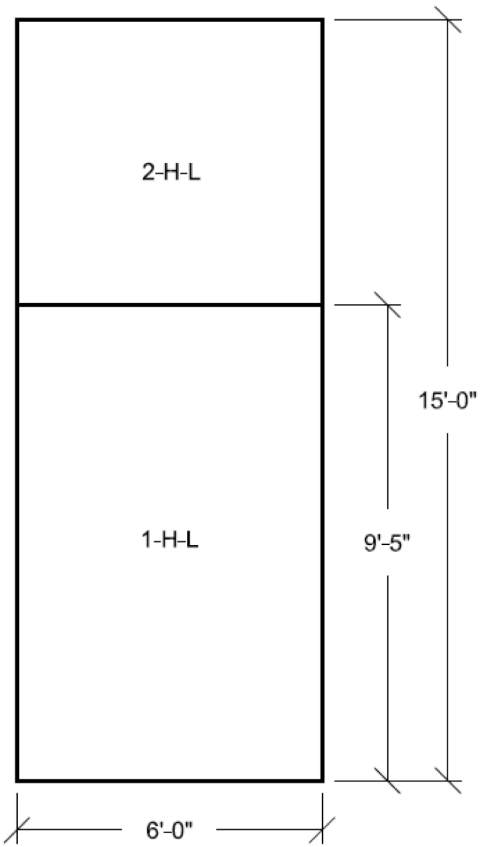

Figure 3H.6-181 DGFOSV Wall 11 Looking From Outside Horizontal Reinforcement Zones Near Side Face

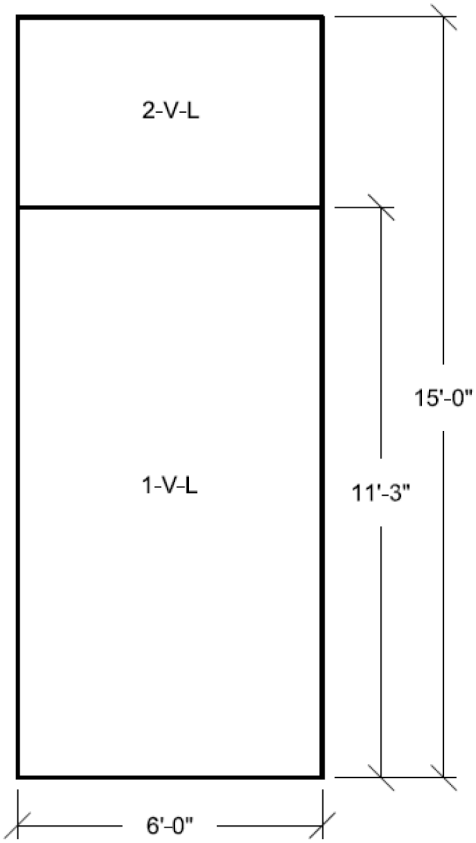

Figure 3H.6-182 DGFOSV Wall 11 Looking From Outside
Vertical Reinforcement Zones
Near Side Face

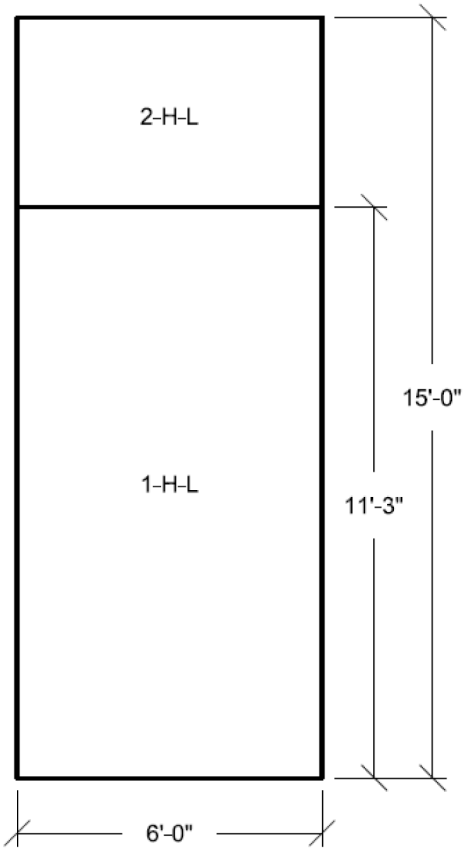

Figure 3H.6-183 DGFOSV Wall 11 Looking From Outside
Horizontal Reinforcement Zones
Far Side Face

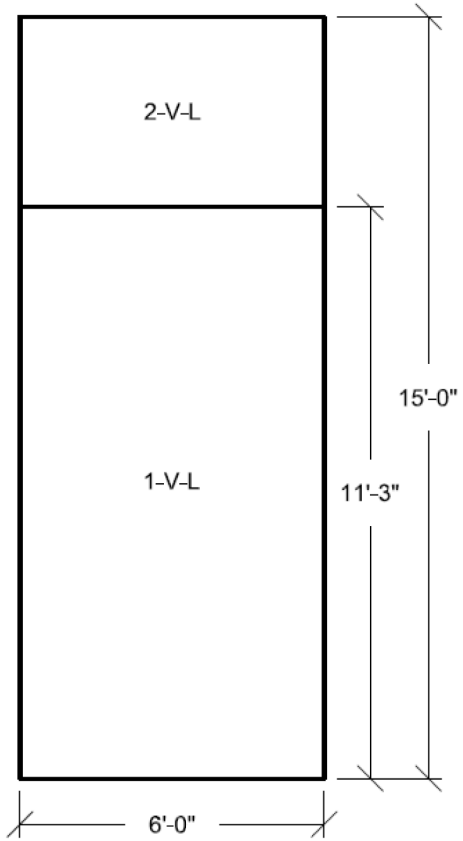

Figure 3H.6-184 DGFOSV Wall 11 Looking From Outside
Vertical Reinforcement Zones
Far Side Face

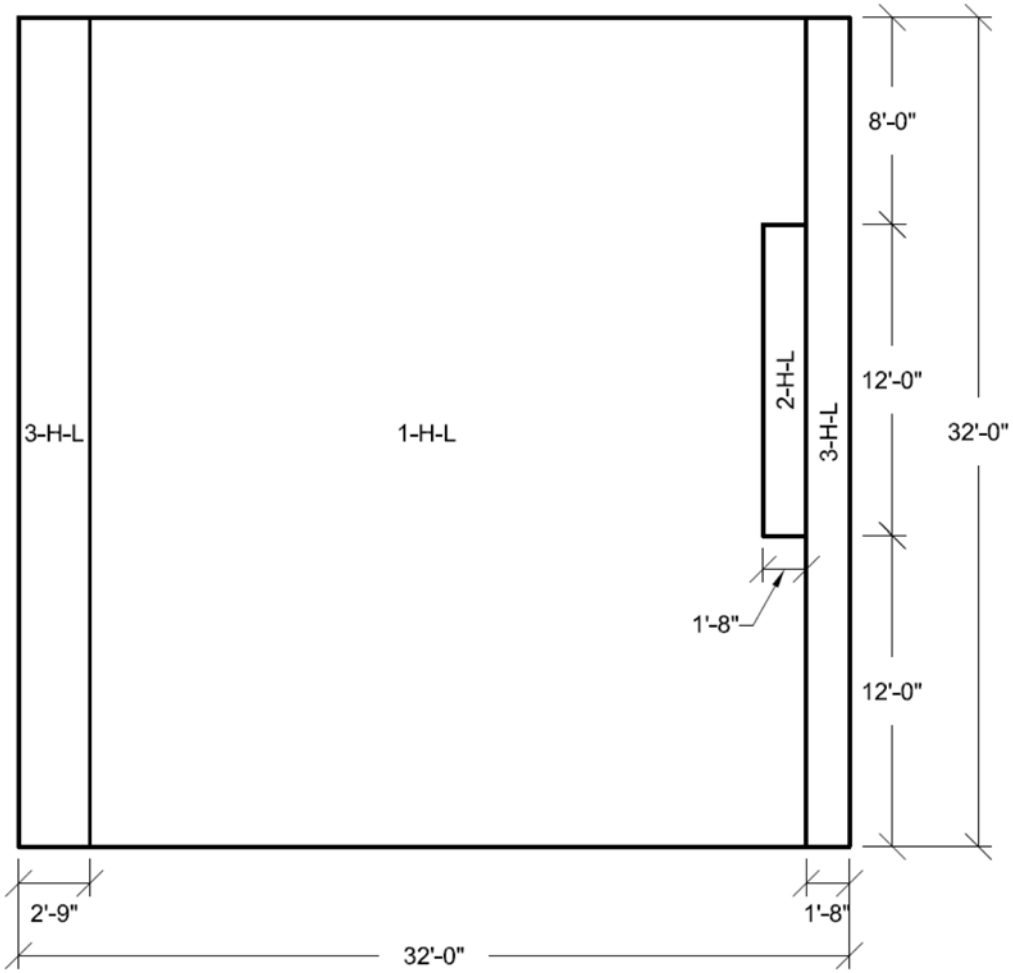

Figure 3H.6-185 DGFOSV Wall 12 Looking From Outside Horizontal Reinforcement Zones Near Side Face

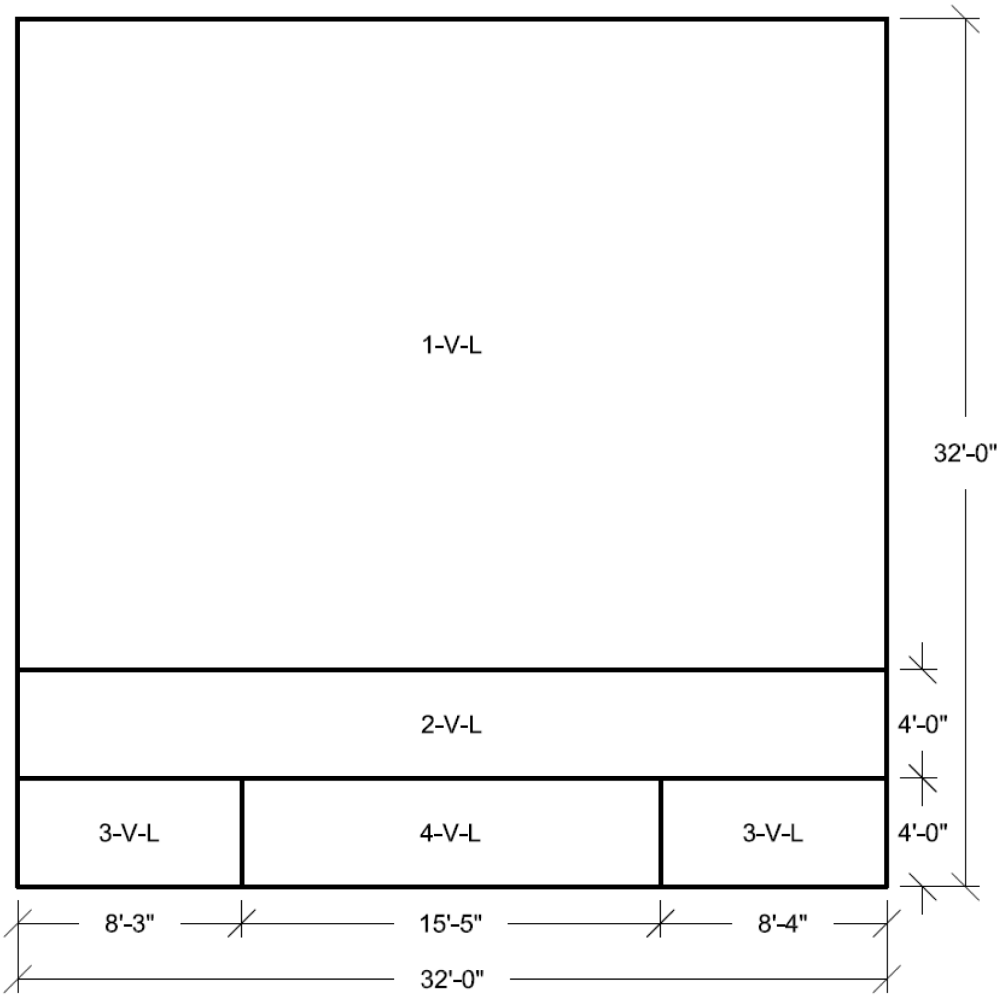

Figure 3H.6-186 DGFOSV Wall 12 Looking From Outside Vertical Reinforcement Zones Near Side Face

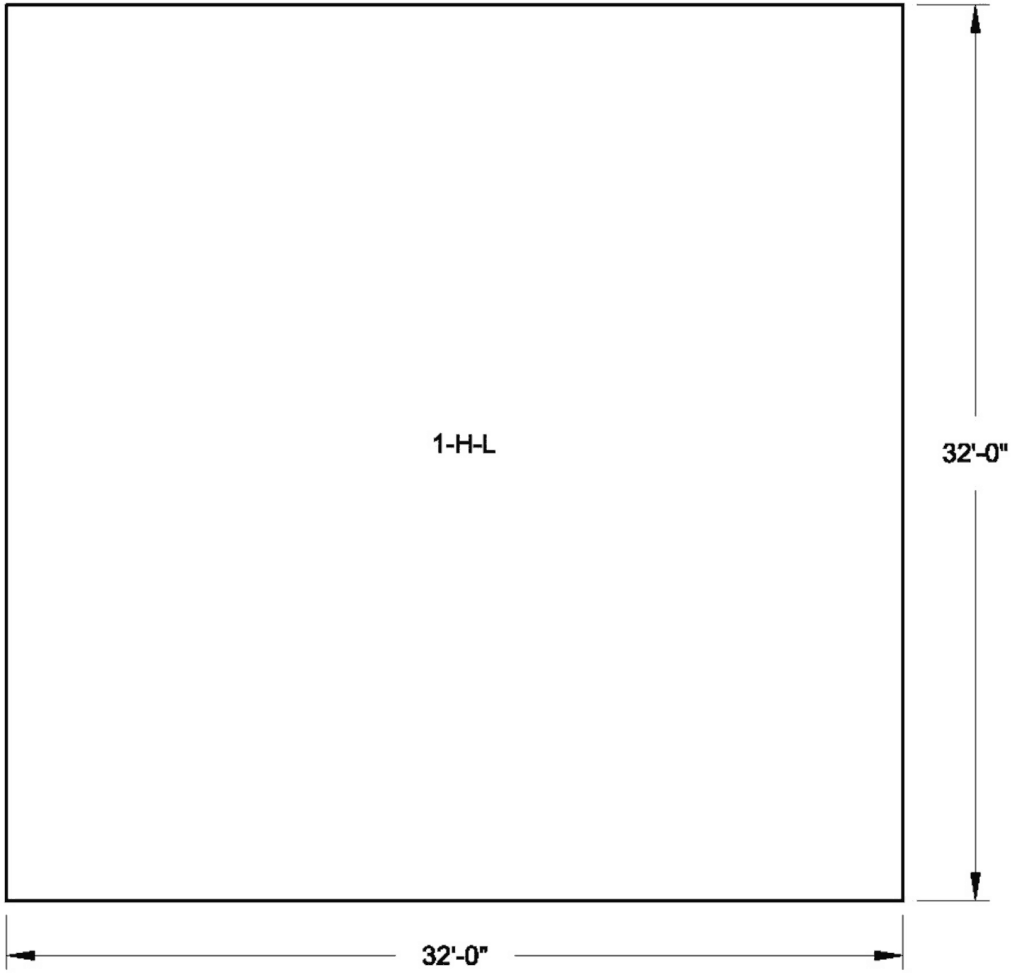

Figure 3H.6-187 DGFOSV Wall 12 Looking From Outside
Horizontal Reinforcement Zones
Far Side Face

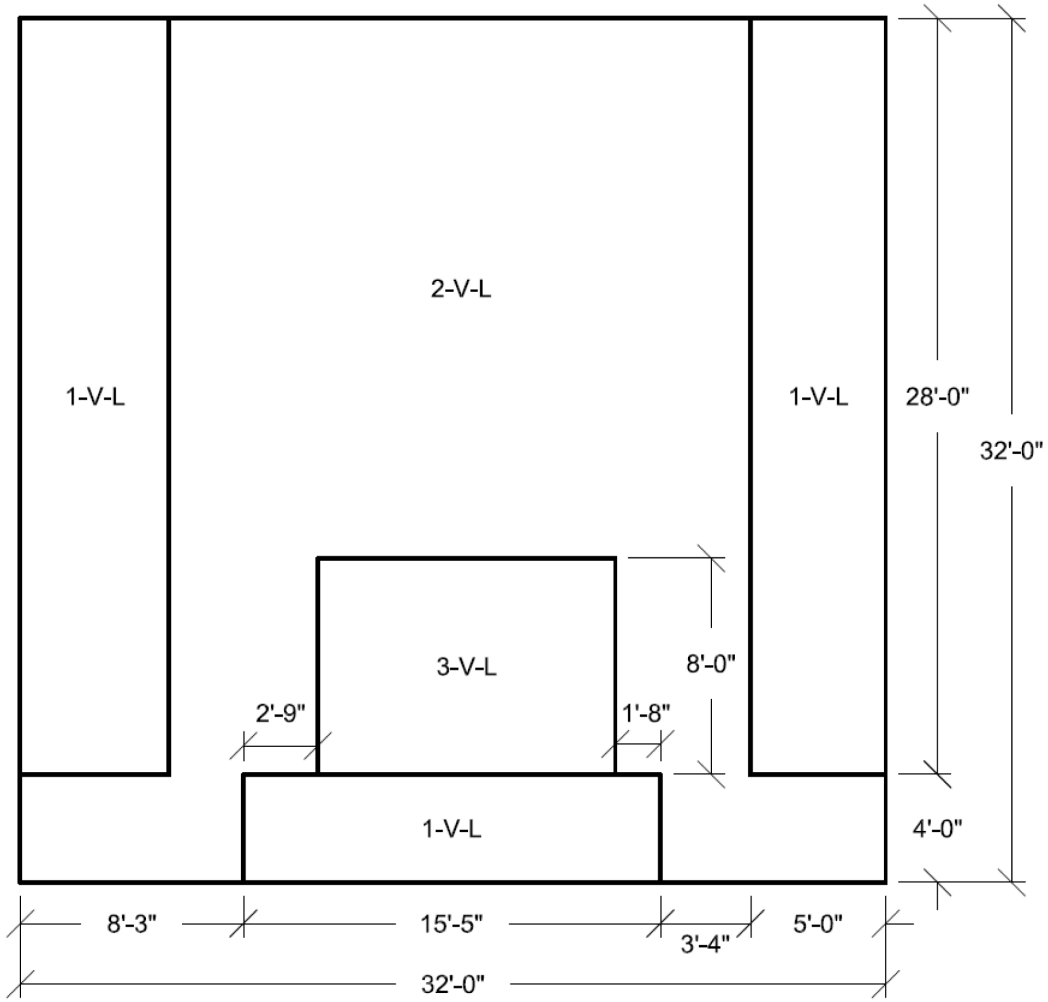

Figure 3H.6-188 DGFOSV Wall 12 Looking From Outside
Vertical Reinforcement Zones
Far Side Face

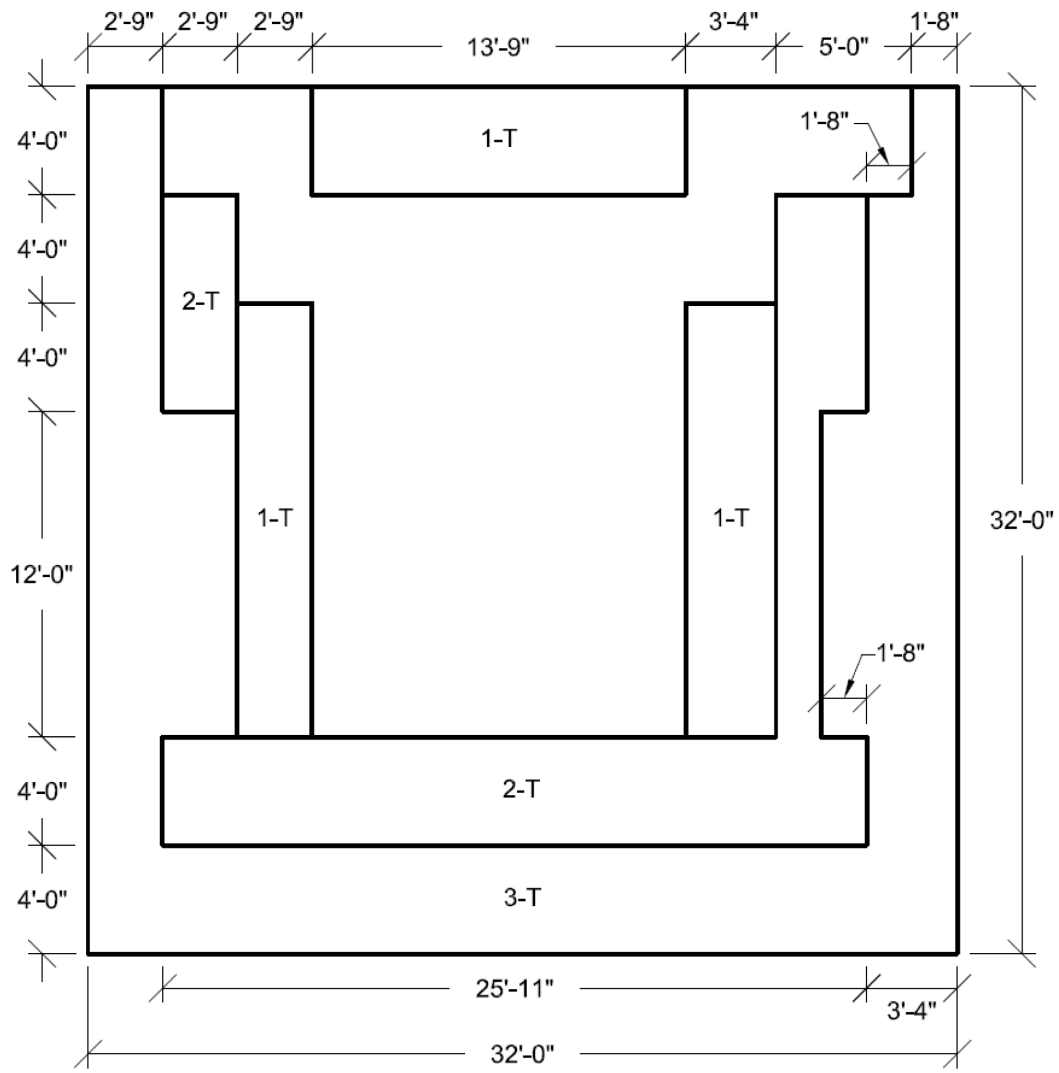

Figure 3H.6-189 DGFOSV Wall 12 Looking From Outside Transverse Reinforcement Zones

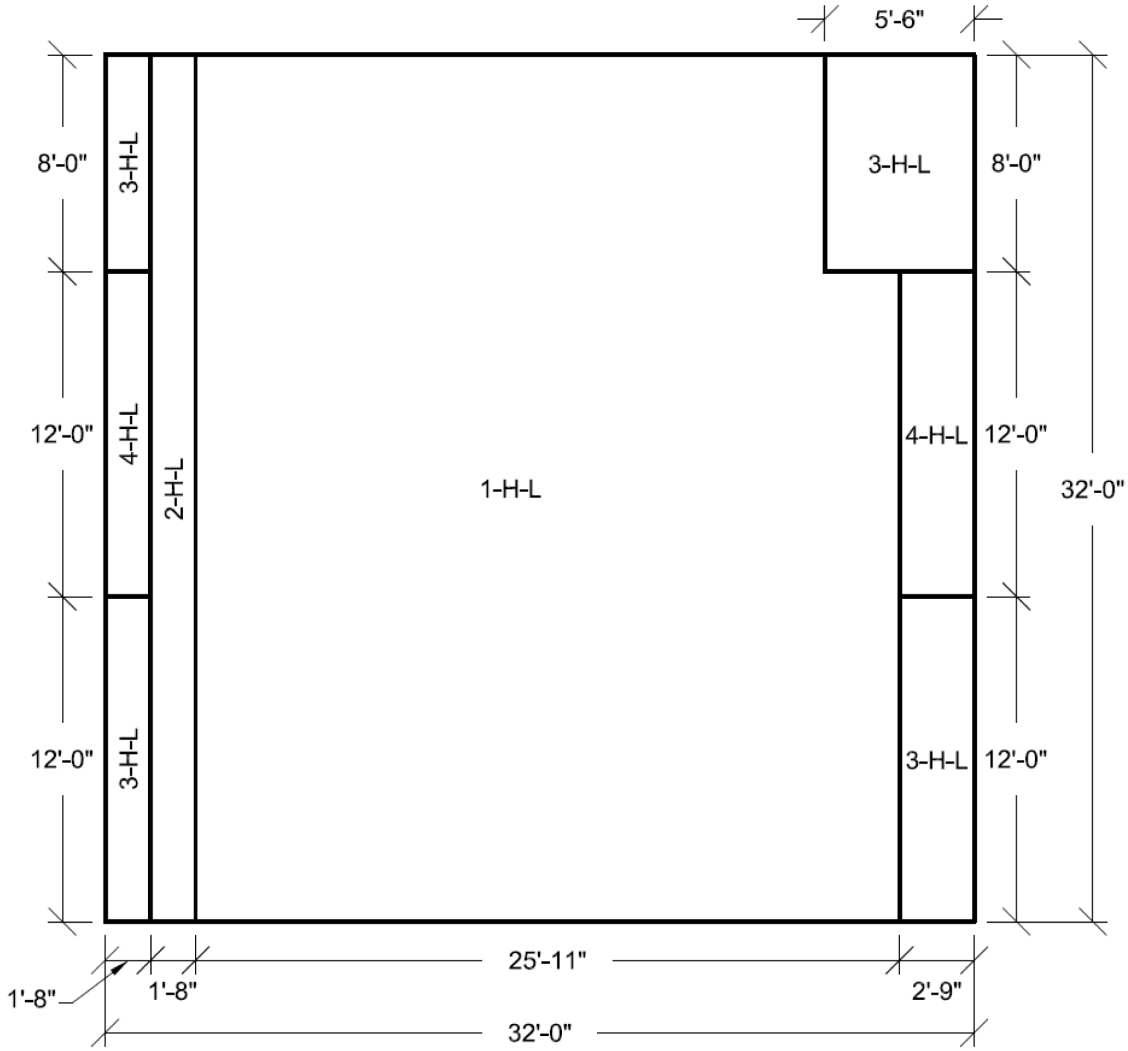

Figure 3H.6-190 DGFOSV Wall 13 Looking From Outside Horizontal Reinforcement Zones Near Side Face

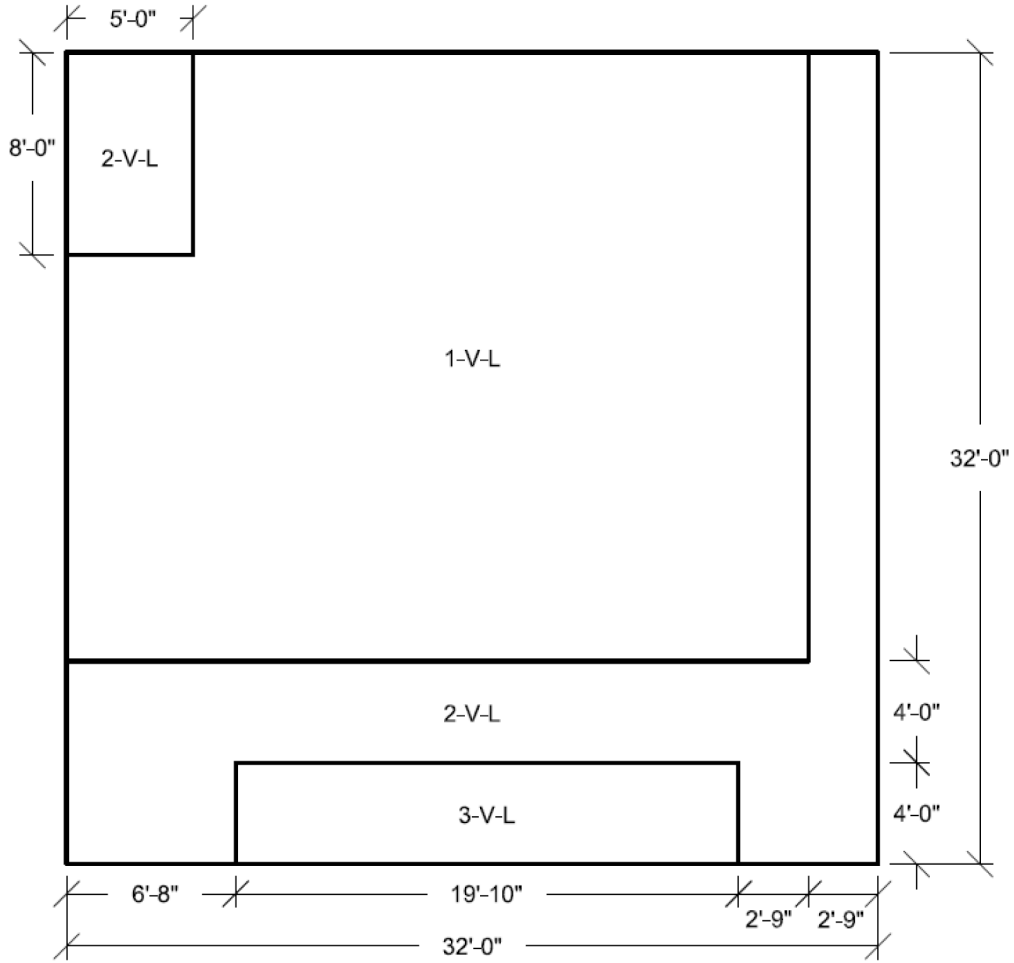

Figure 3H.6-191 DGFOSV Wall 13 Looking From Outside Vertical Reinforcement Zones Near Side Face

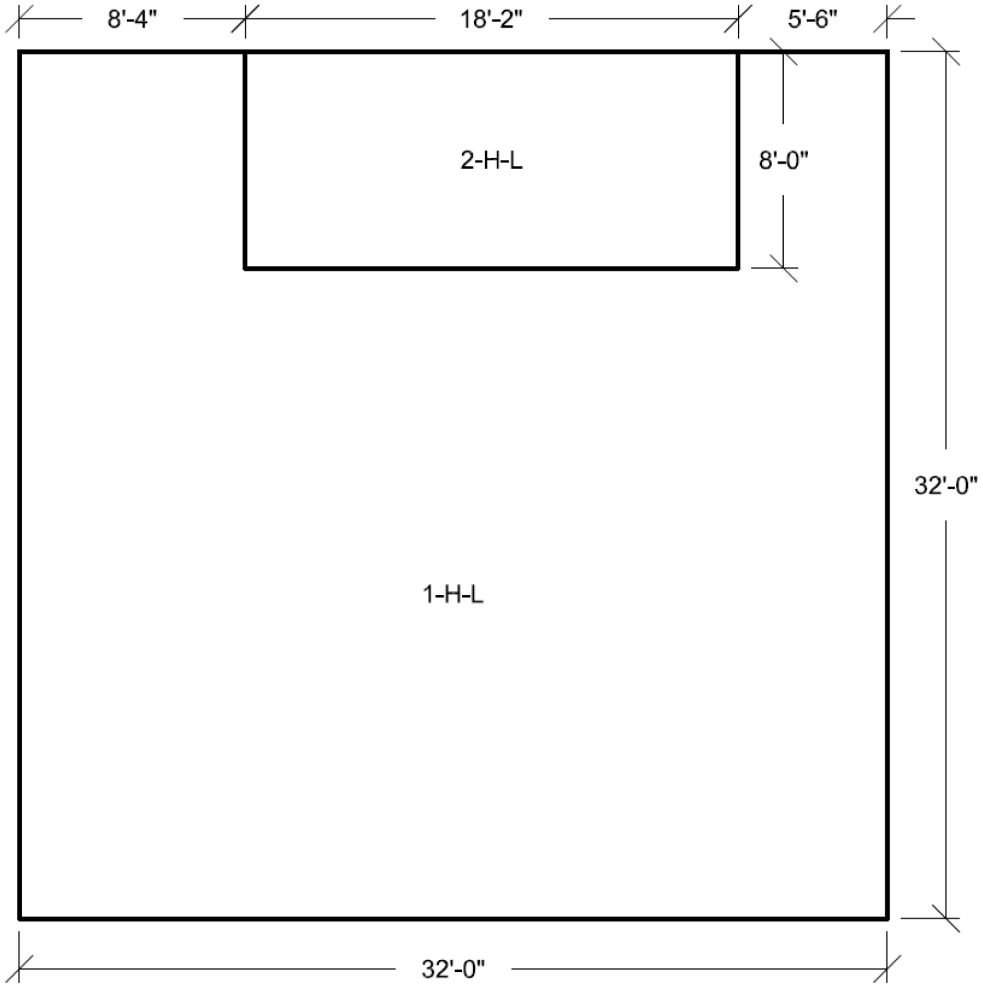

Figure 3H.6-192 DGFOSV Wall 13 Looking From Outside
Horizontal Reinforcement Zones
Far Side Face

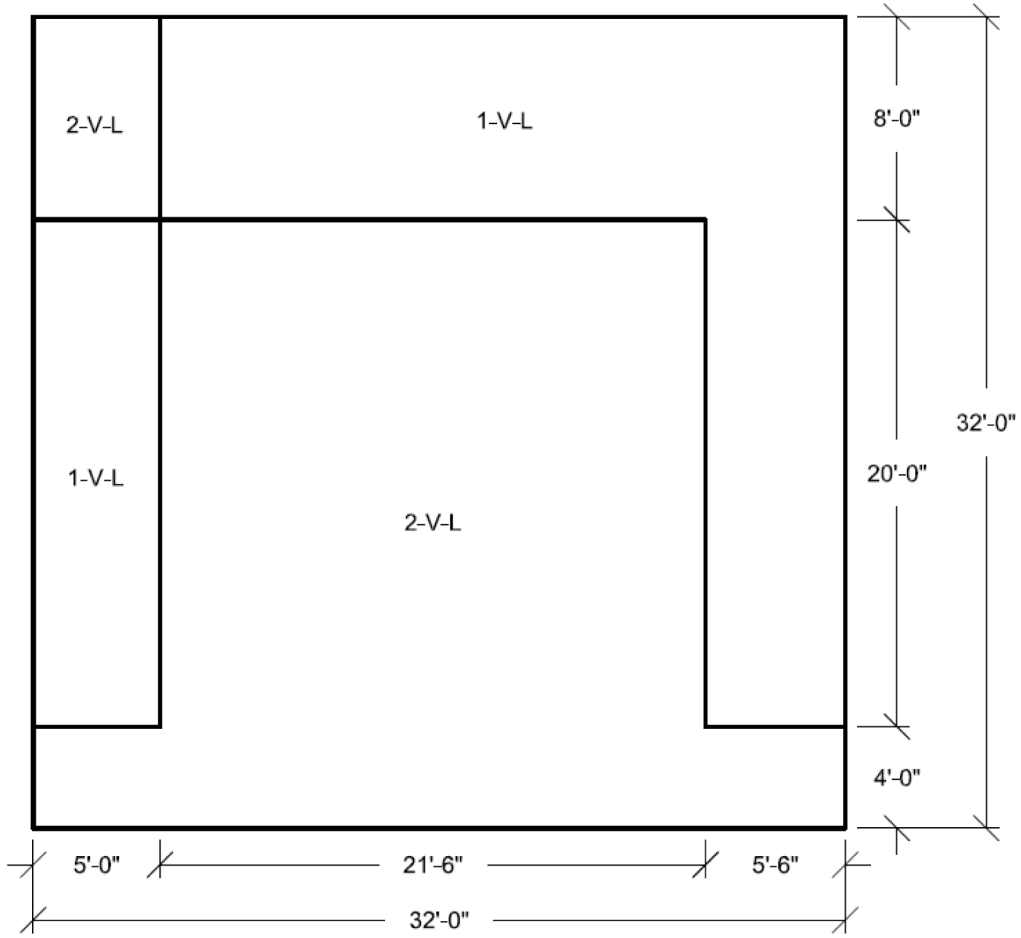

Figure 3H.6-193 DGFOSV Wall 13 Looking From Outside
Vertical Reinforcement Zones
Far Side Face

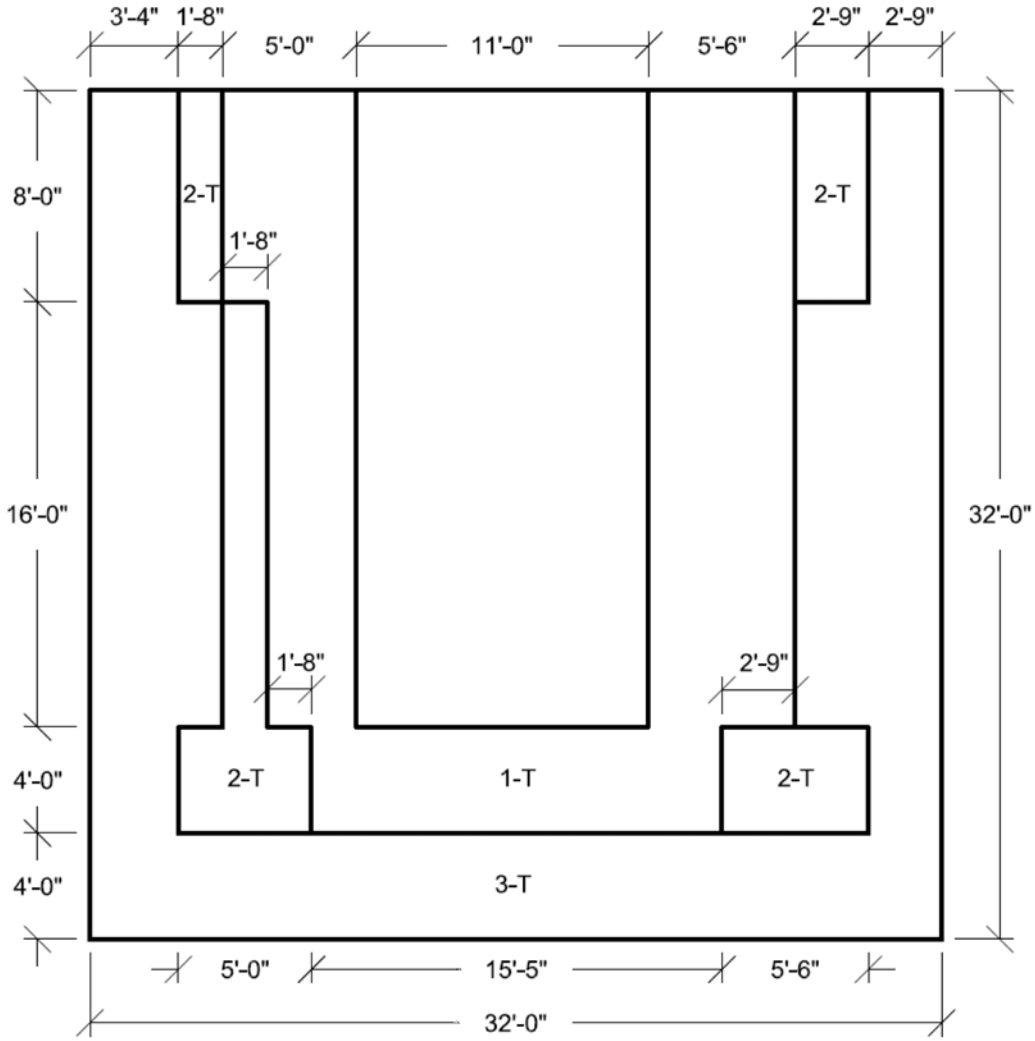

Figure 3H.6-194 DGFOSV Wall 13 Looking From Outside Transverse Reinforcement Zones

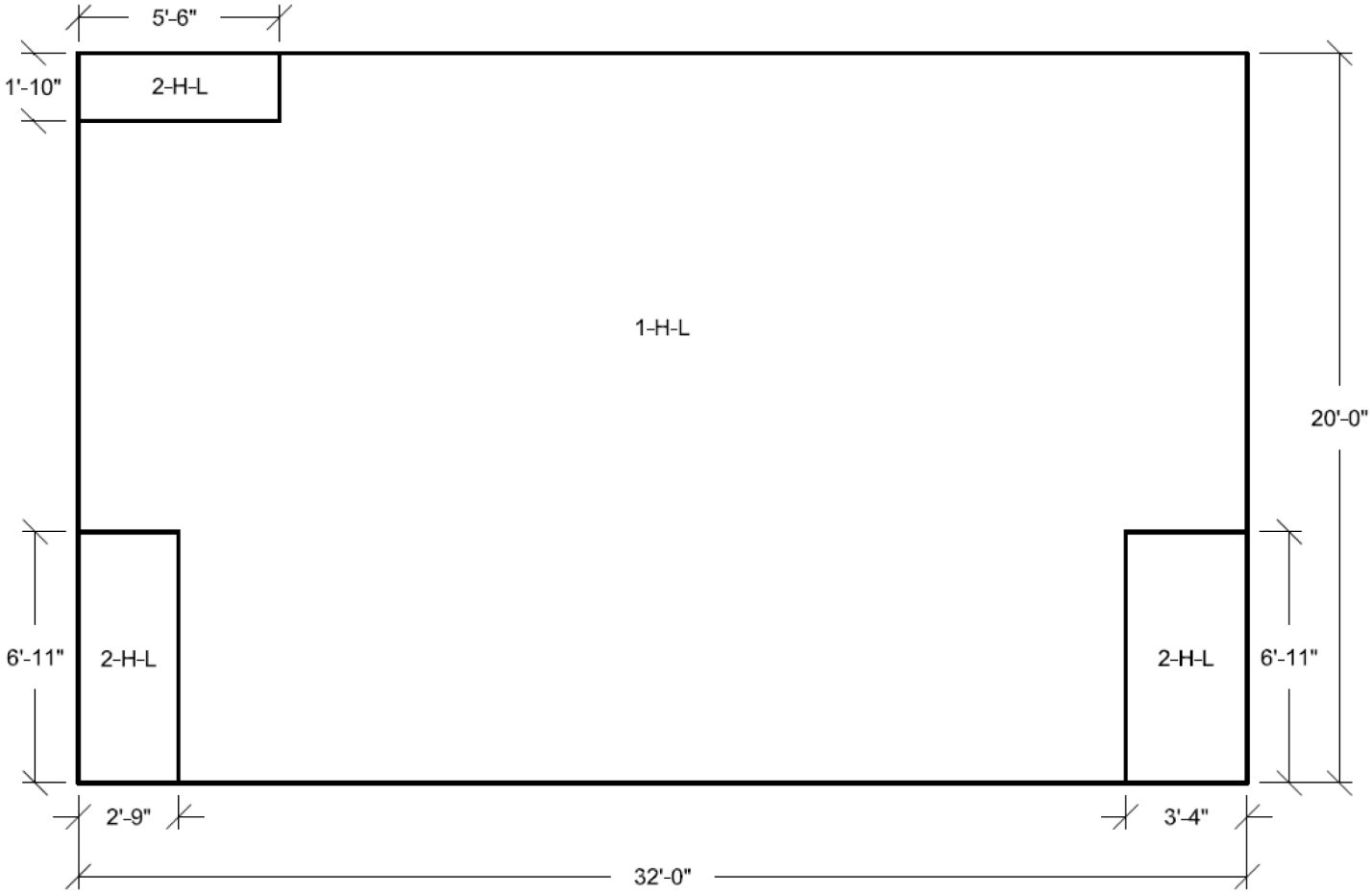

Figure 3H.6-195 DGFOSV Wall 14 Looking From Outside
Horizontal Reinforcement Zones
Near Side Face

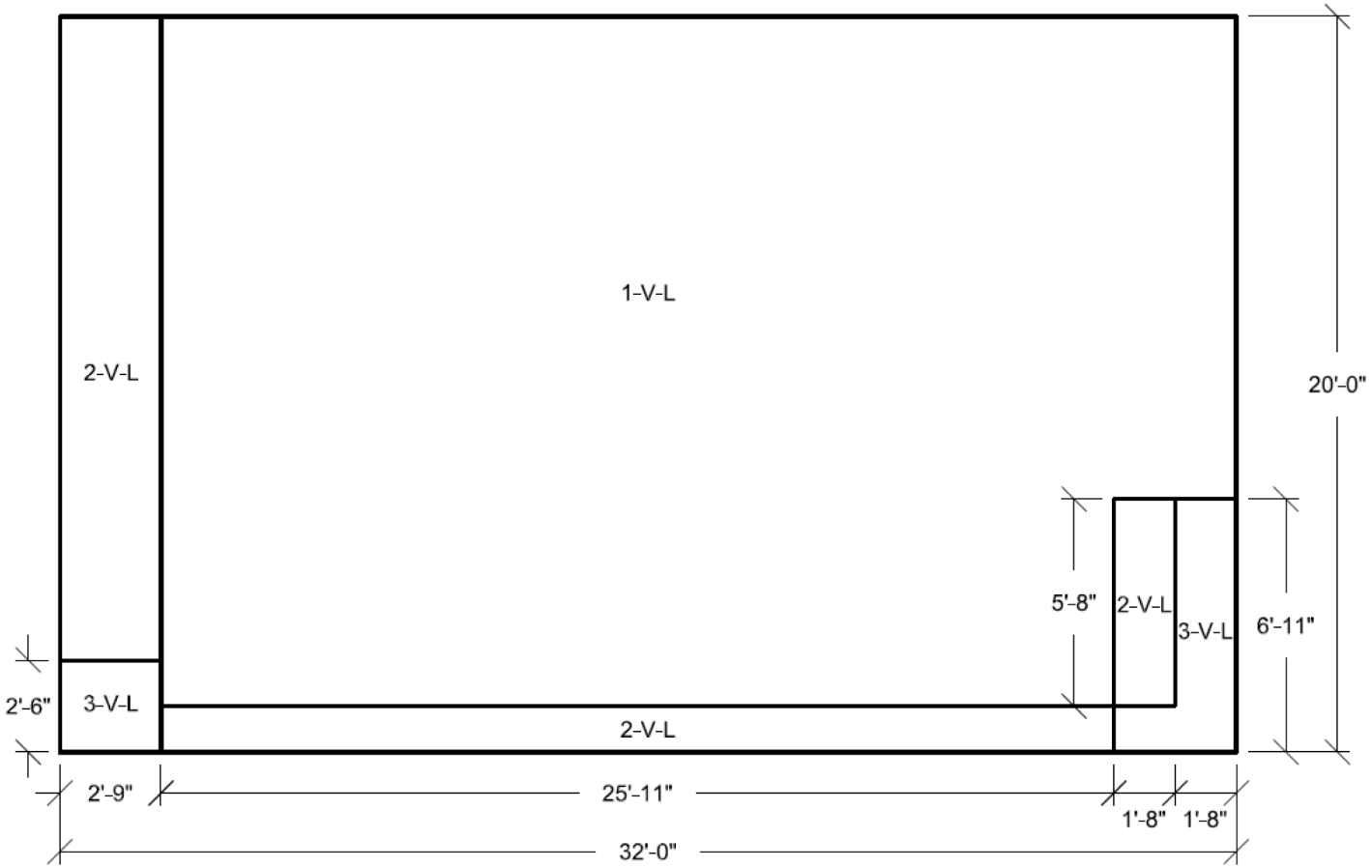

Figure 3H.6-196 DGFOSV Wall 14 Looking From Outside
Vertical Reinforcement Zones
Near Side Face

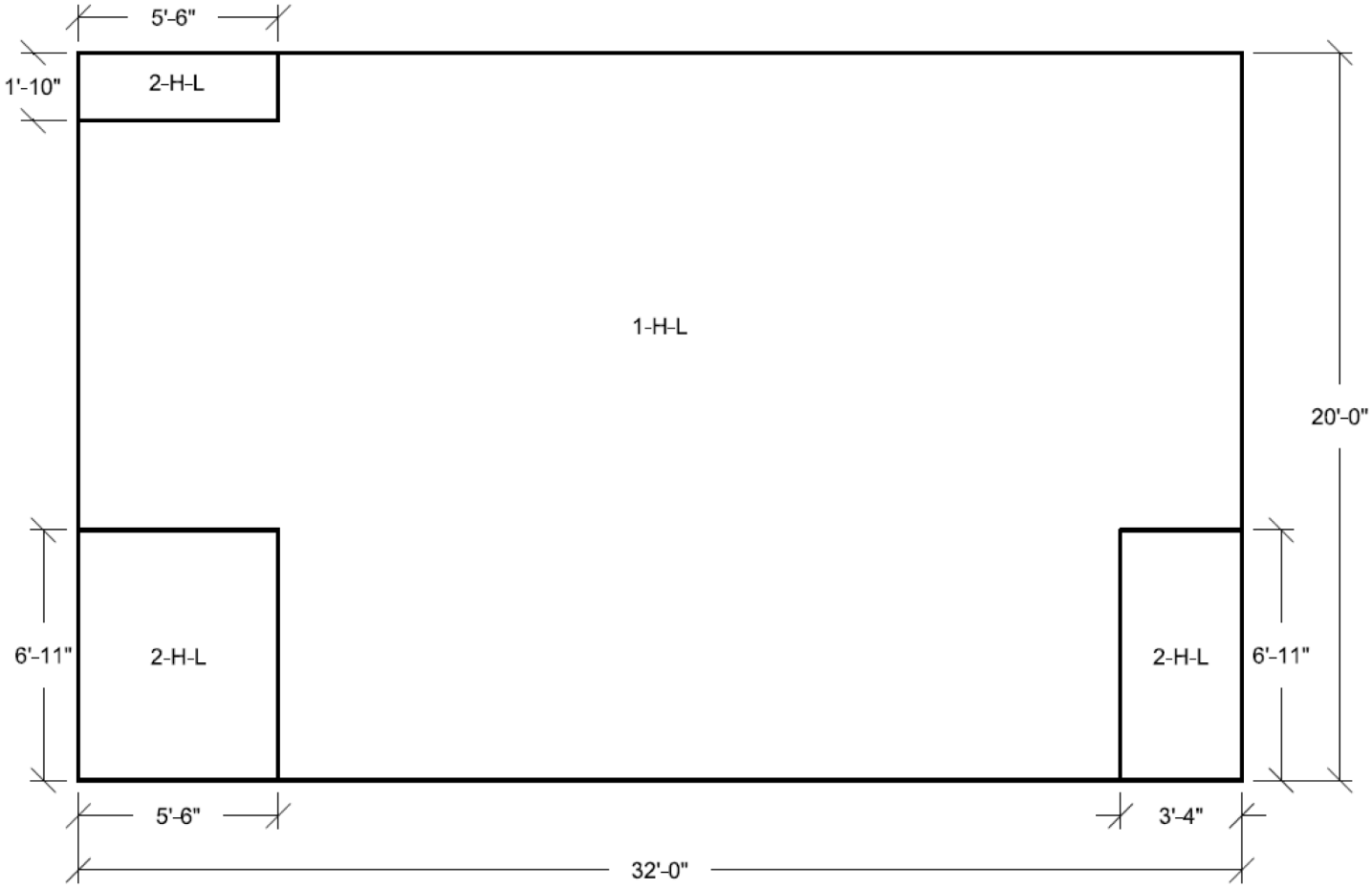

Figure 3H.6-197 DGFOSV Wall 14 Looking From Outside
Horizontal Reinforcement Zones
Far Side Face

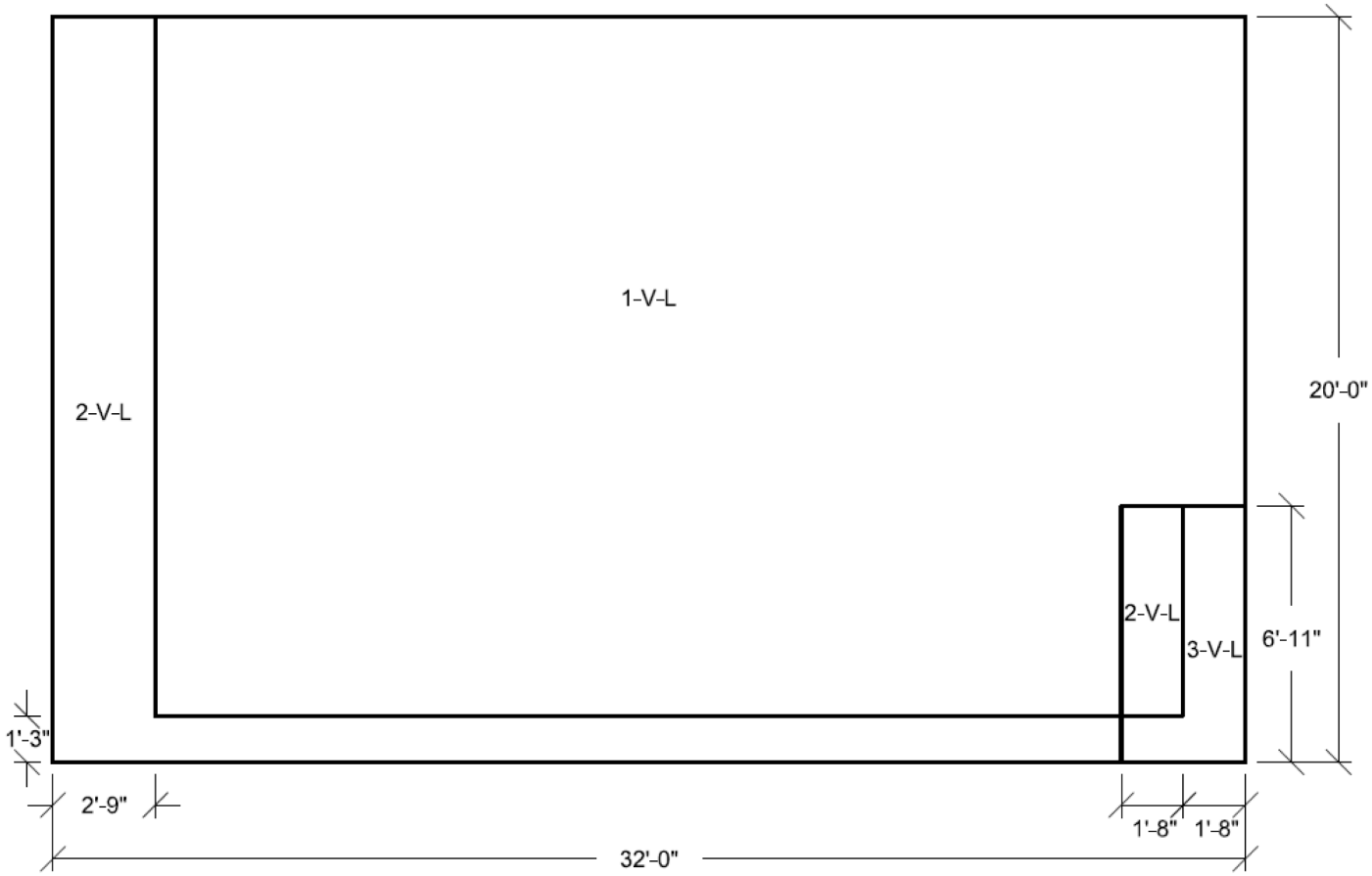

Figure 3H.6-198 DGFOSV Wall 14 Looking From Outside
Vertical Reinforcement Zones
Far Side Face

Figure 3H.6-199 DGFOSV Wall 14 Looking From Outside Transverse Reinforcement Zones

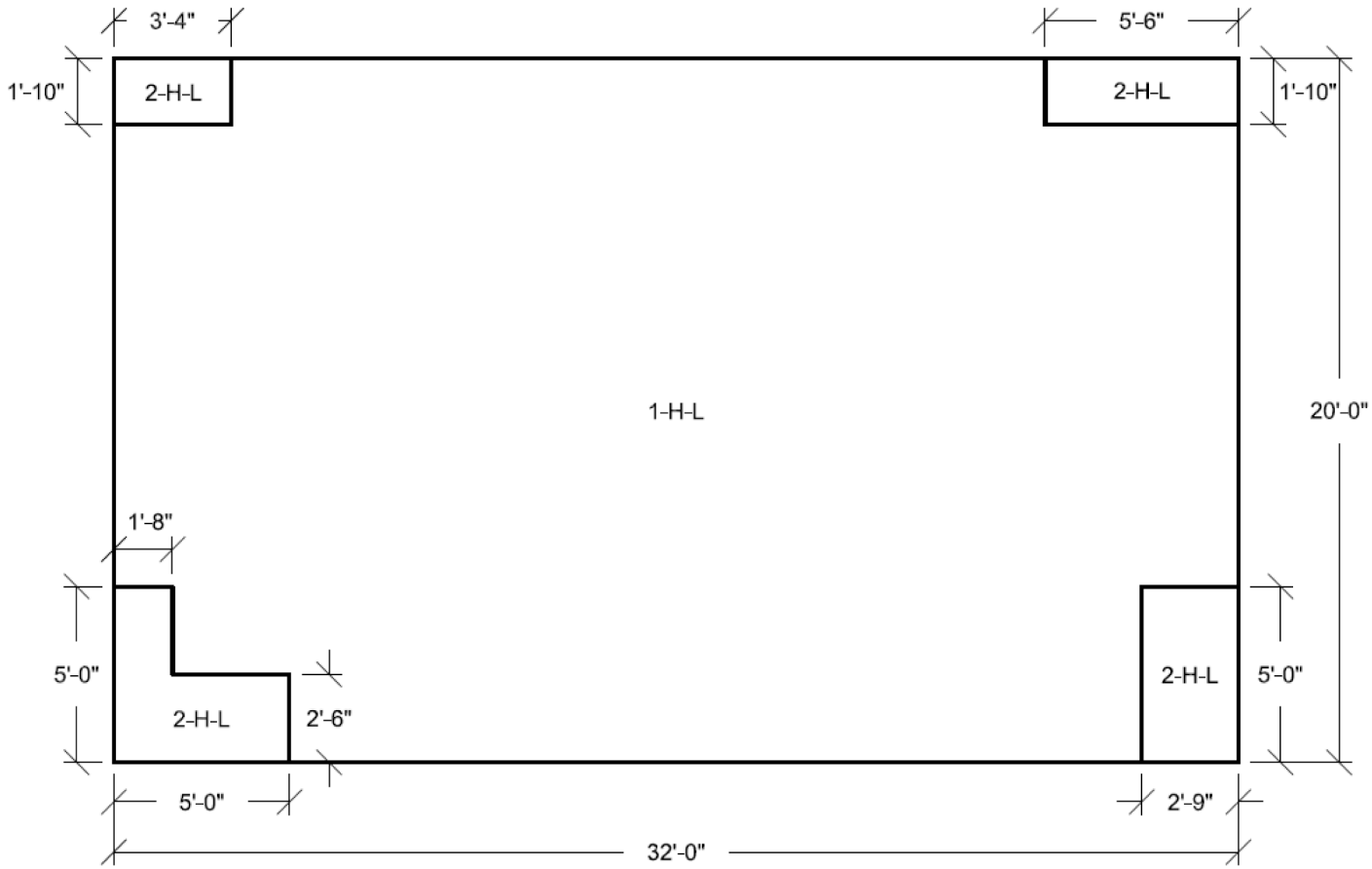

Figure 3H.6-200 DGFOSV Wall 15 Looking From Outside
Horizontal Reinforcement Zones
Near Side Face

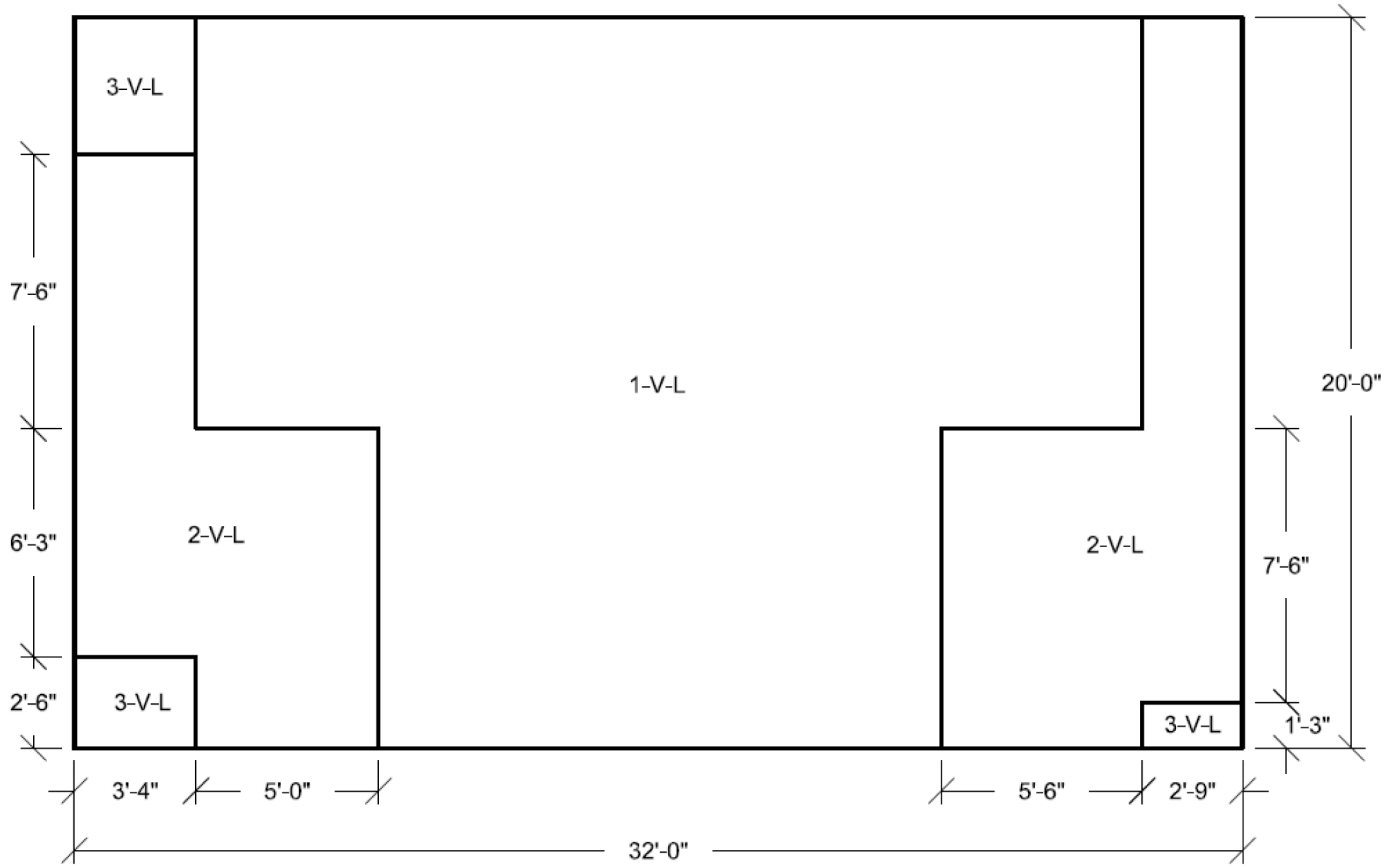

Figure 3H.6-201 DGFOSV Wall 15 Looking From Outside
Vertical Reinforcement Zones
Near Side Face

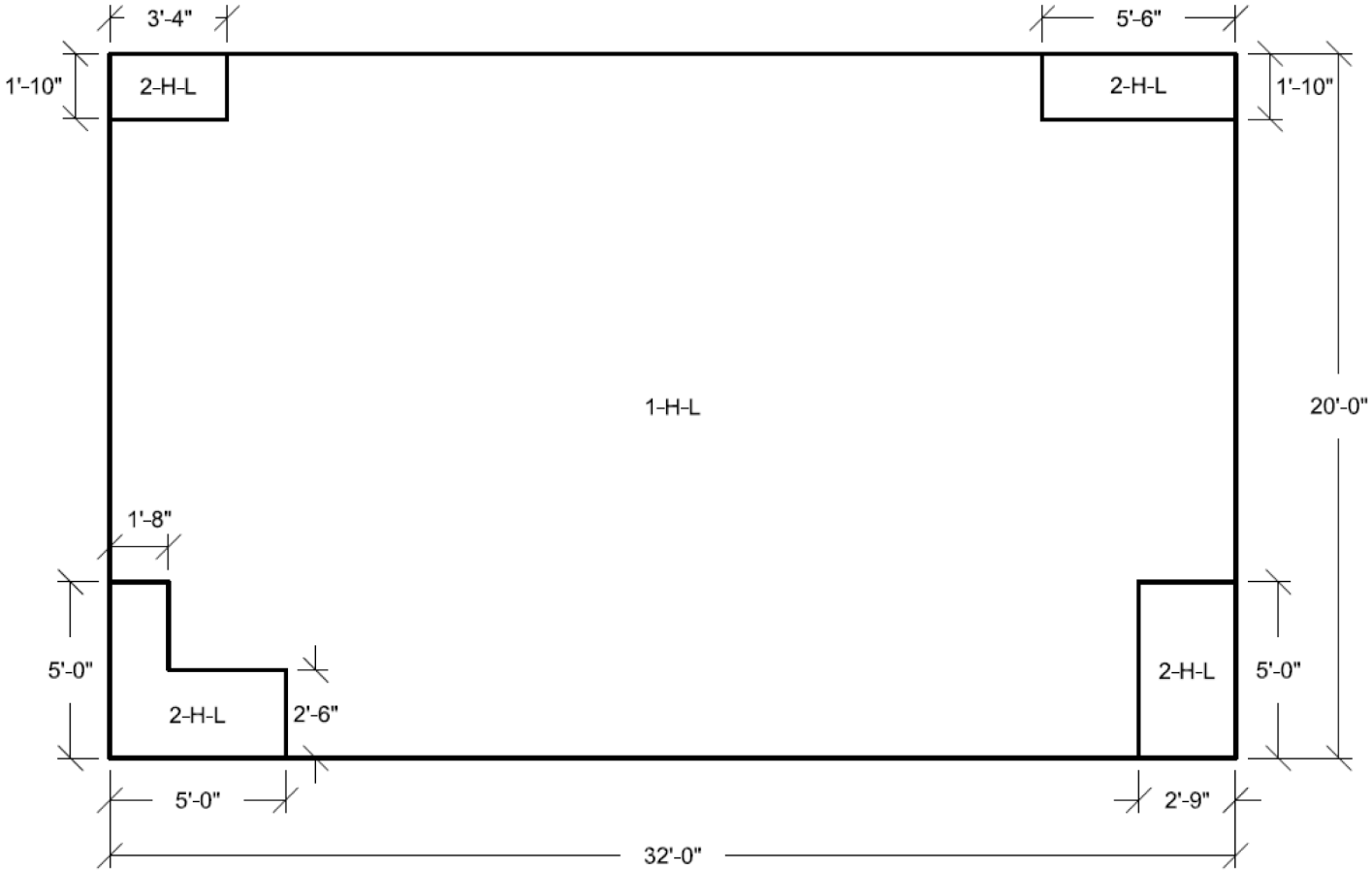

Figure 3H.6-202 DGFOSV Wall 15 Looking From Outside
Horizontal Reinforcement Zones
Far Side Face

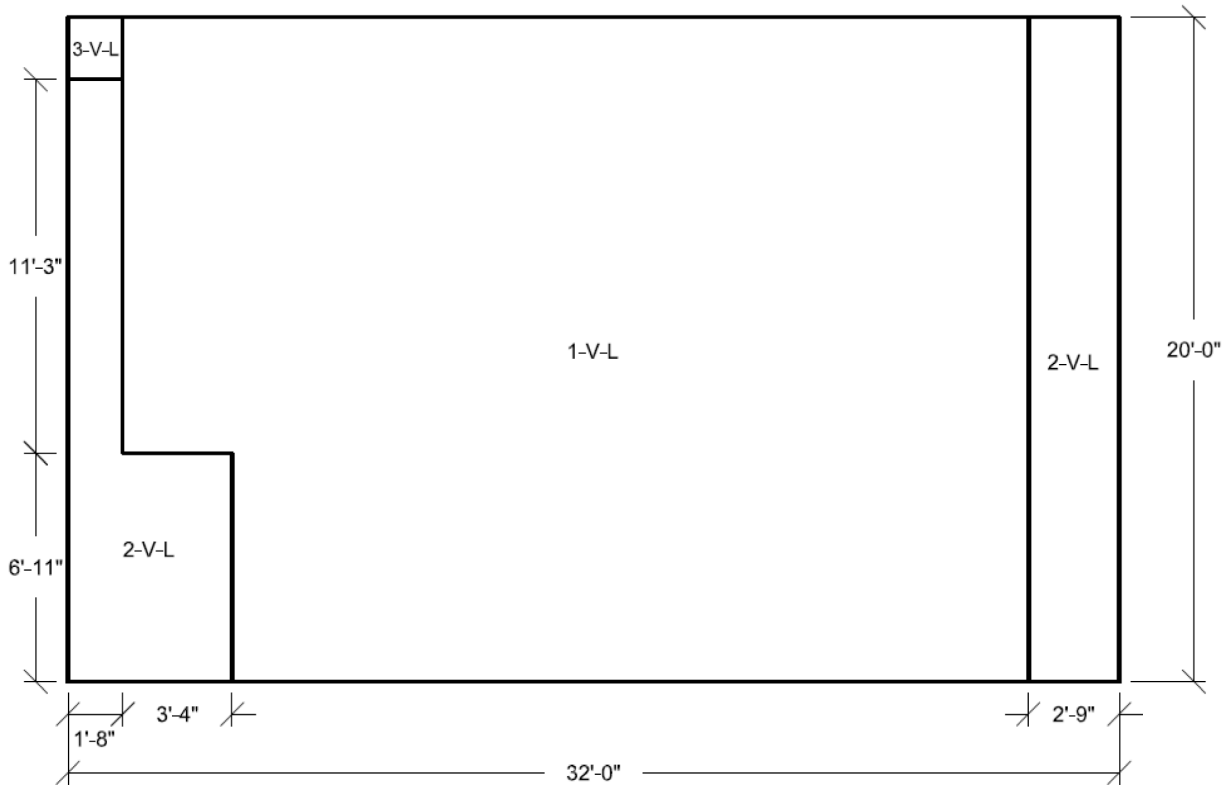

Figure 3H.6-203A DGFOSV Wall 15 Looking From Outside
Vertical Reinforcement Zones
Far Side Face

Figure 3H.6-203B DGFOSV Wall 15 Looking From Outside Transverse Reinforcement Zones

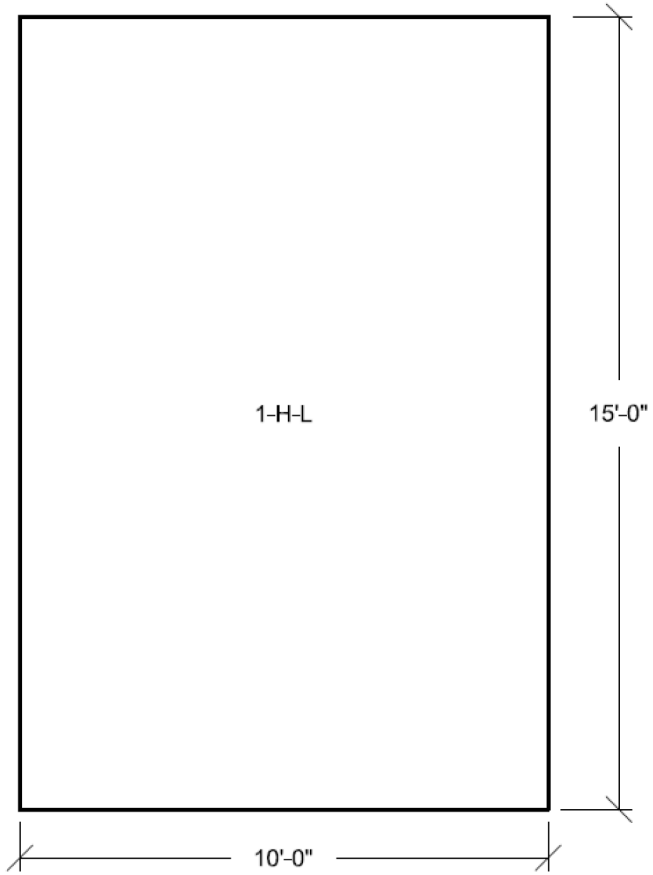

Figure 3H.6-204 DGFOSV Wall 16 Looking From Outside
Horizontal Reinforcement Zones
Near Side Face

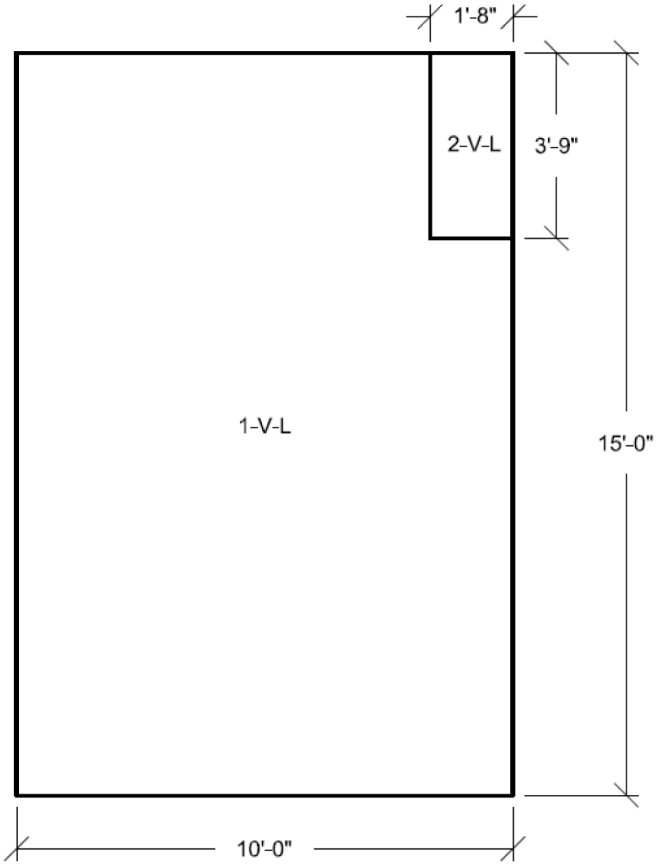

Figure 3H.6-205 DGFOSV Wall 16 Looking From Outside
Vertical Reinforcement Zones
Near Side Face

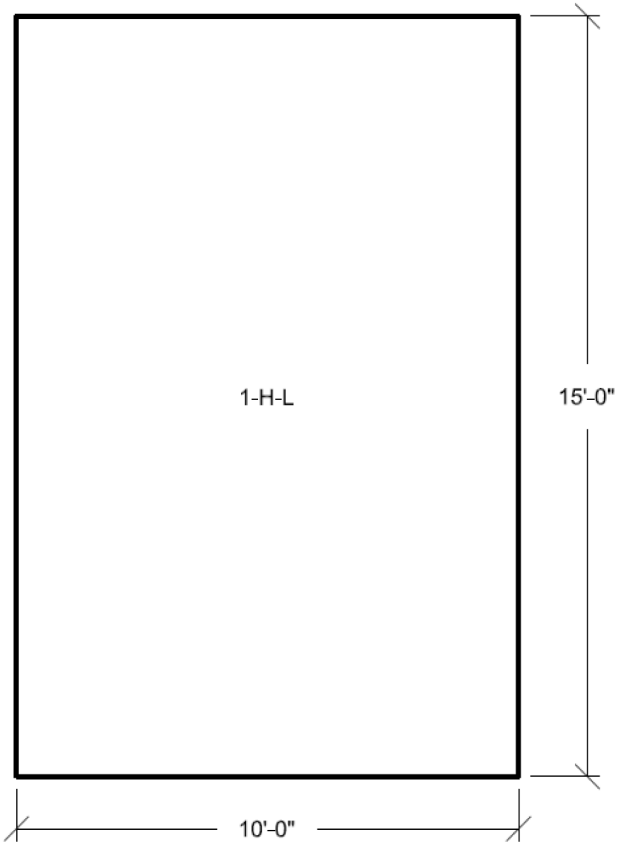

Figure 3H.6-206 DGFOSV Wall 16 Looking From Outside
Horizontal Reinforcement Zones
Far Side Face

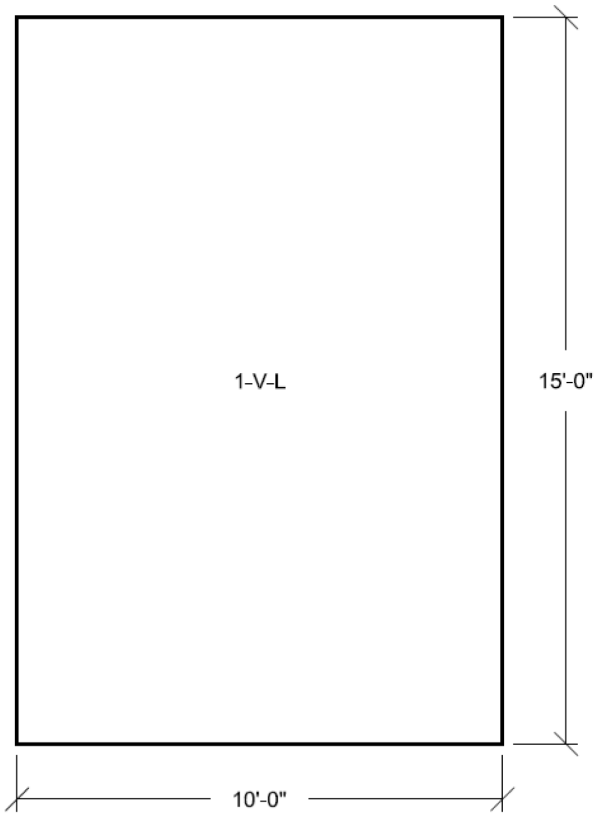

Figure 3H.6-207 DGFOSV Wall 16 Looking From Outside
Vertical Reinforcement Zones
Far Side Face

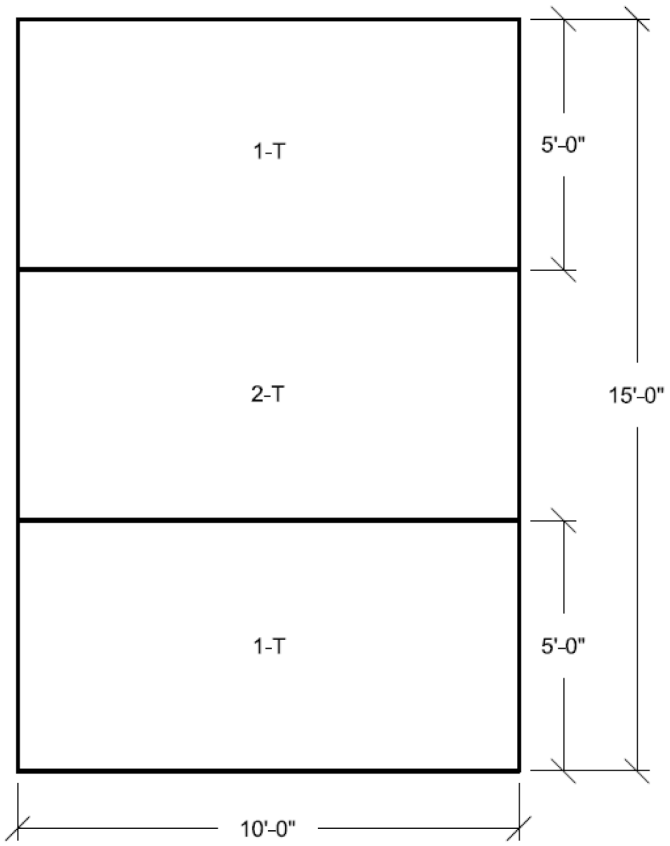

Figure 3H.6-208 DGFOSV Wall 16 Looking From Outside Transverse Reinforcement Zones

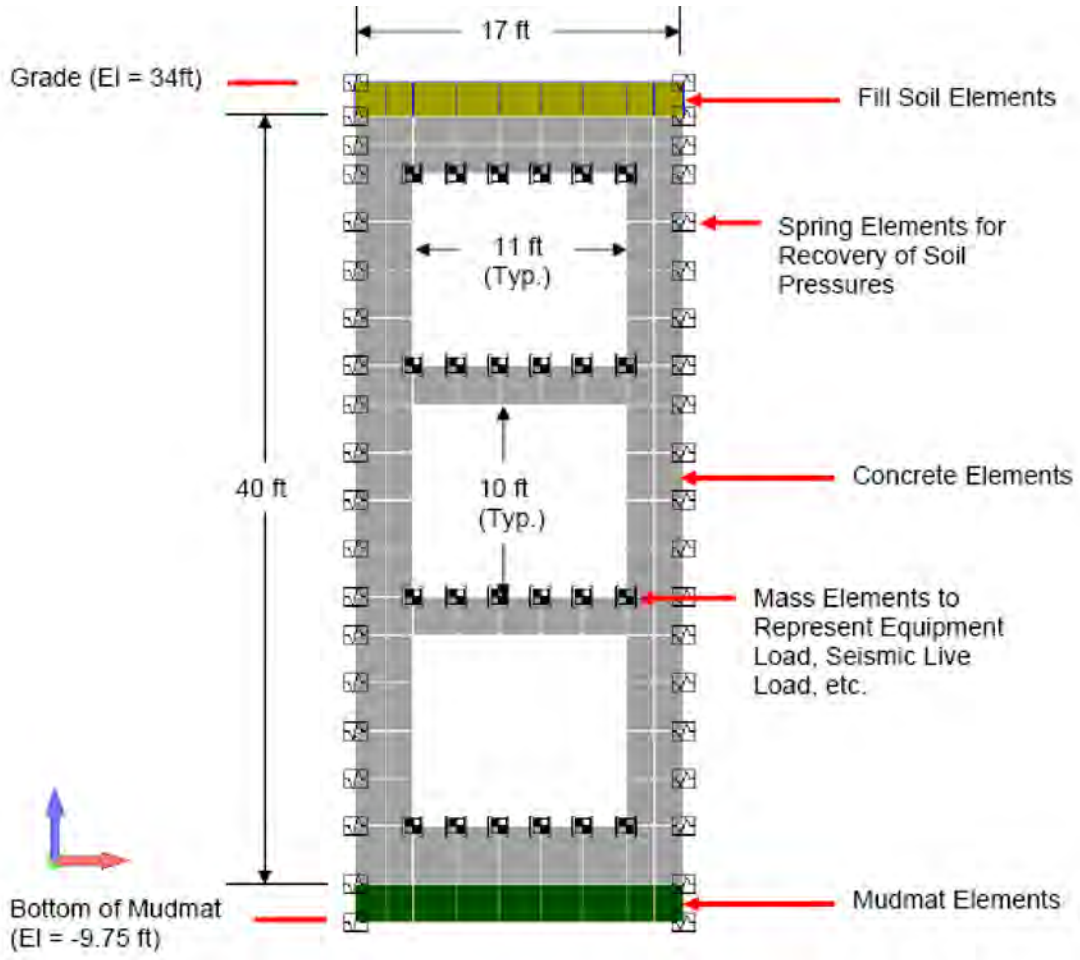

Figure 3H.6-209 SSI Model of RSW Piping Tunnel

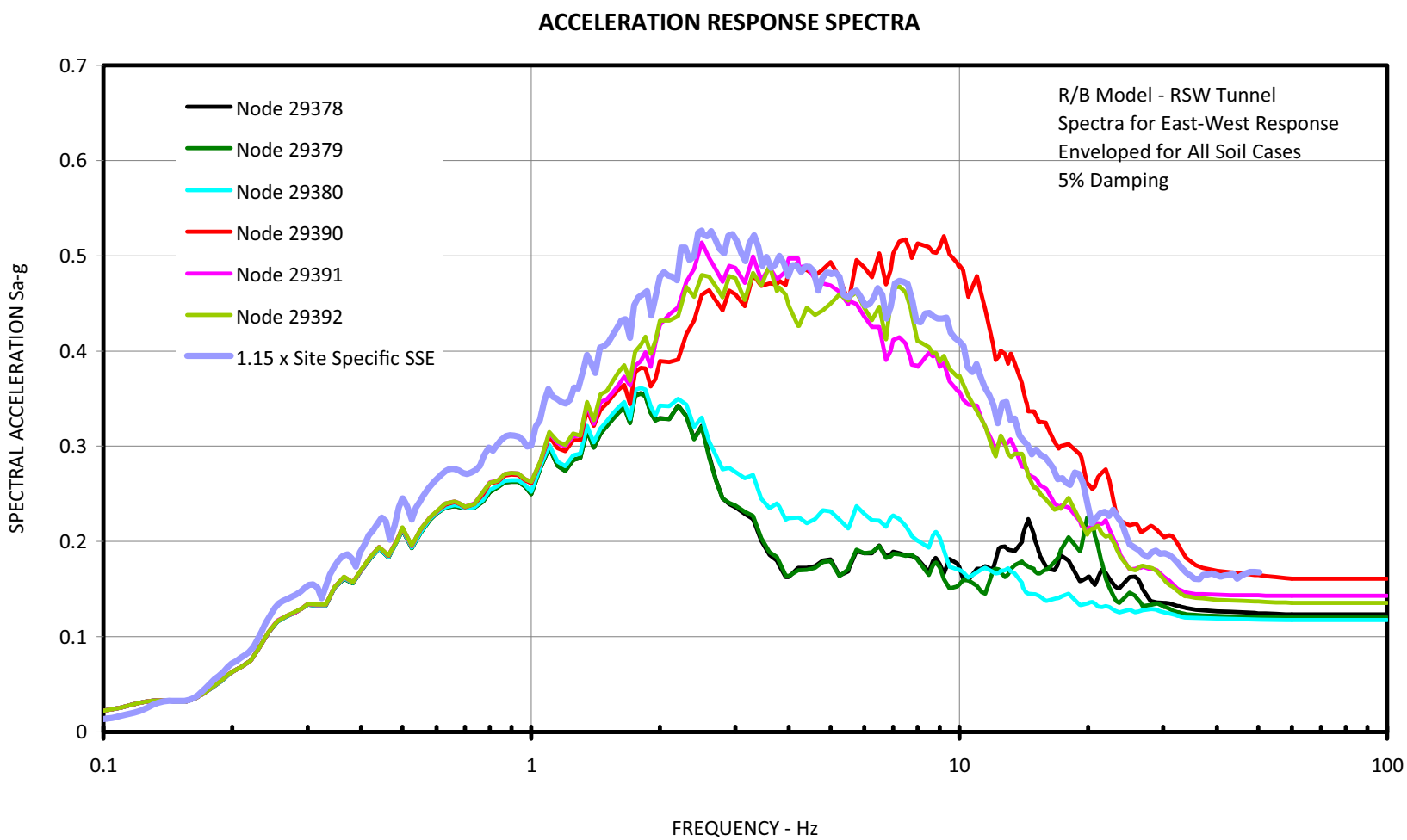

Figure 3H.6-209a Amplified E-W Site-Specific Response Spectra for Reactor Service Water (RSW) Piping Tunnel (Based on SSI Analysis of Reactor Building)

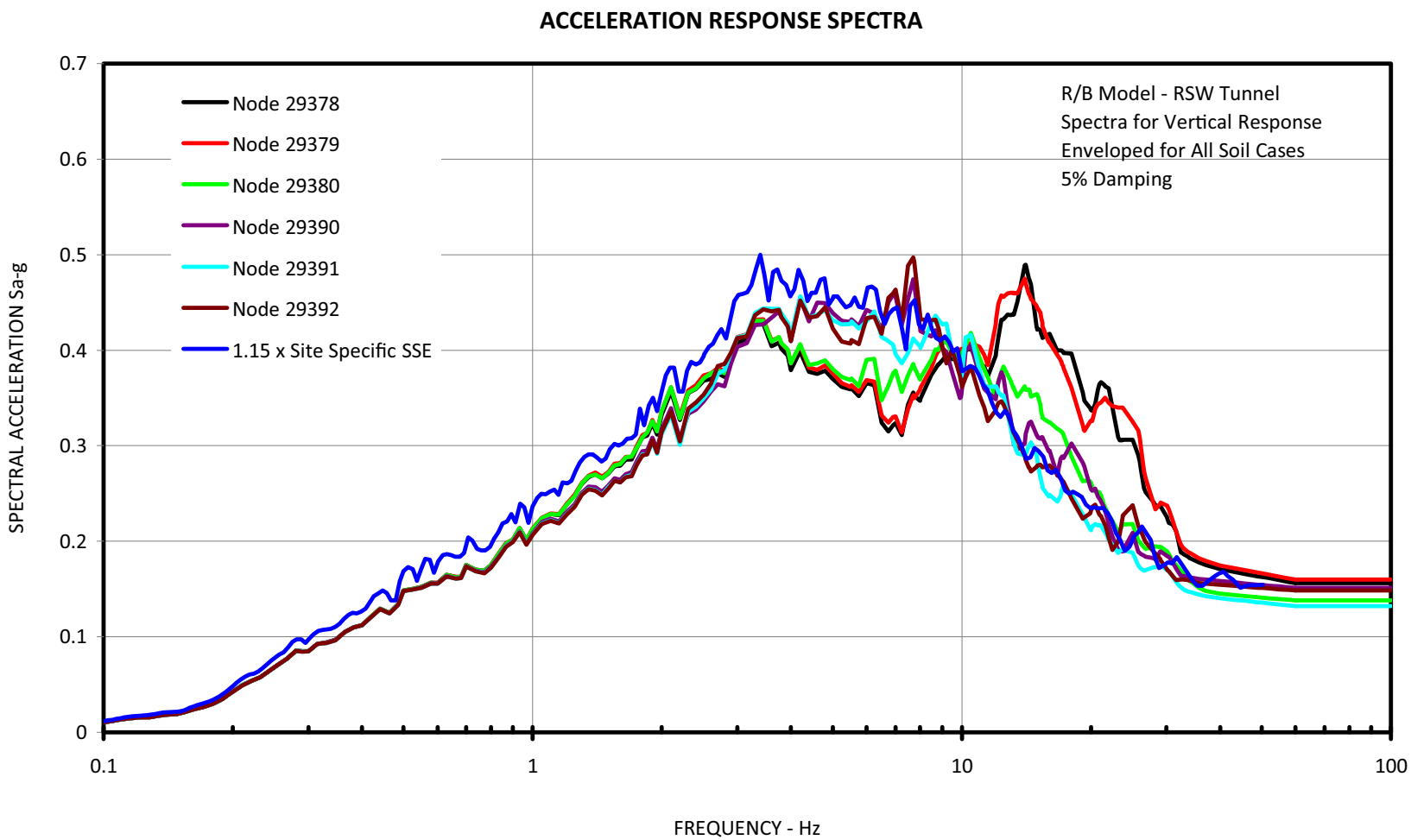

Figure 3H.6-209b Amplified Vertical Site-Specific Response Spectra for Reactor Service Water (RSW) Piping Tunnel (Based on SSI Analysis of Reactor Building)

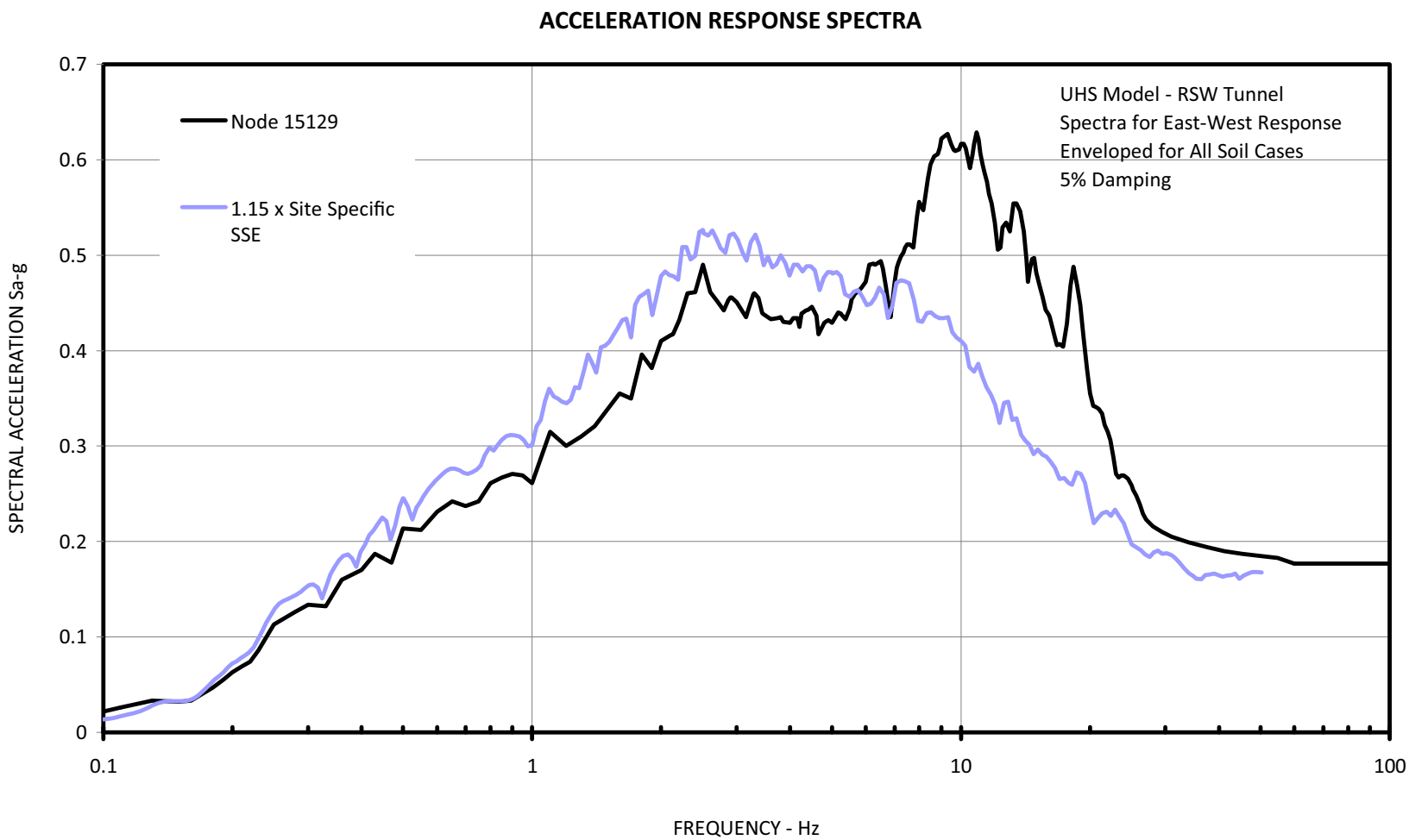

Figure 3H.6-209c Amplified E-W Site-Specific Response Spectra for Reactor Service Water (RSW) Piping Tunnel (Based on SSI Analysis of UHS/RSW Pump House)

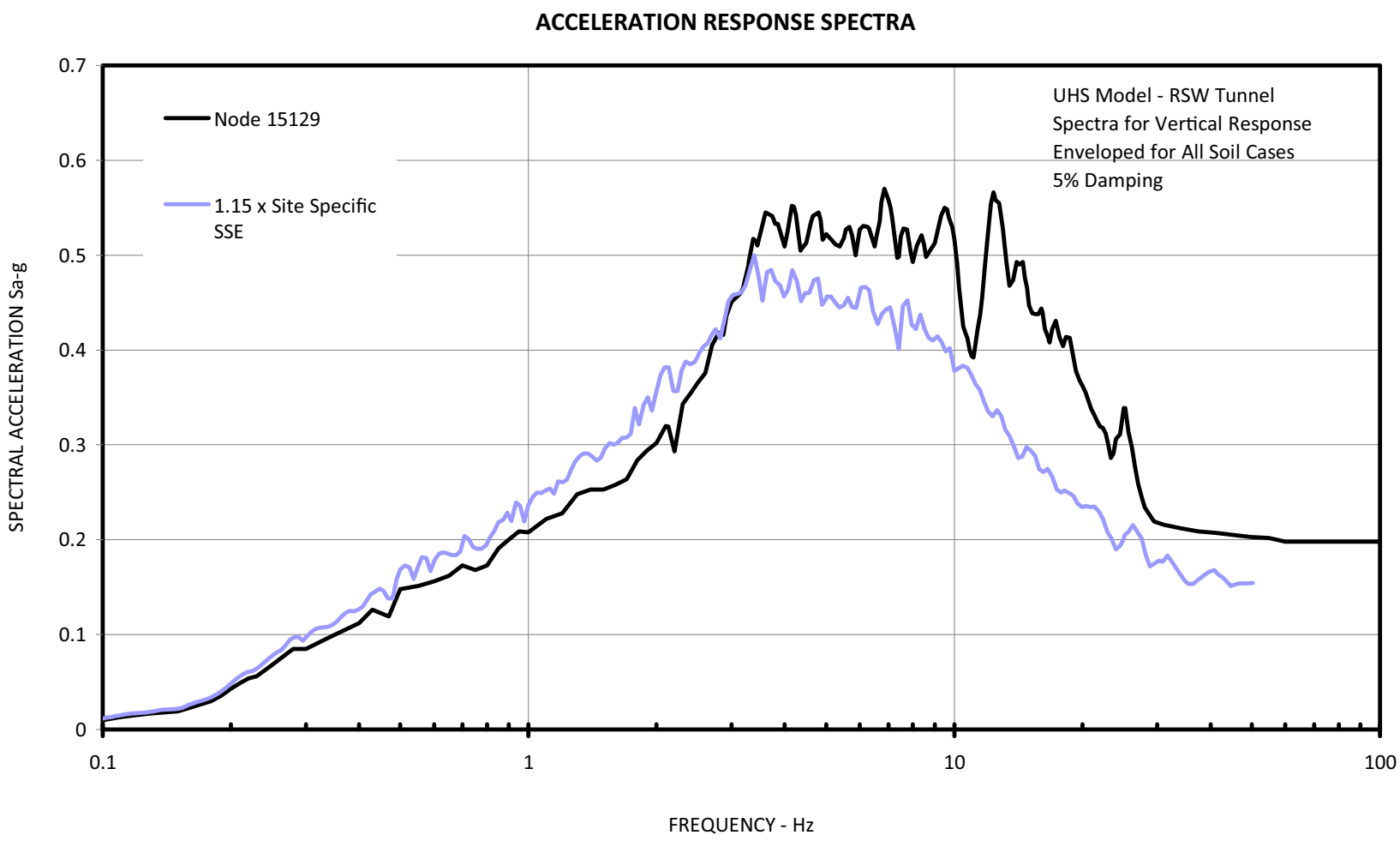

Figure 3H.6-209d Amplified E-W Site-Specific Response Spectra for Reactor Service Water (RSW) Piping Tunnel (Based on SSI Analysis of UHS/RSW Pump House)

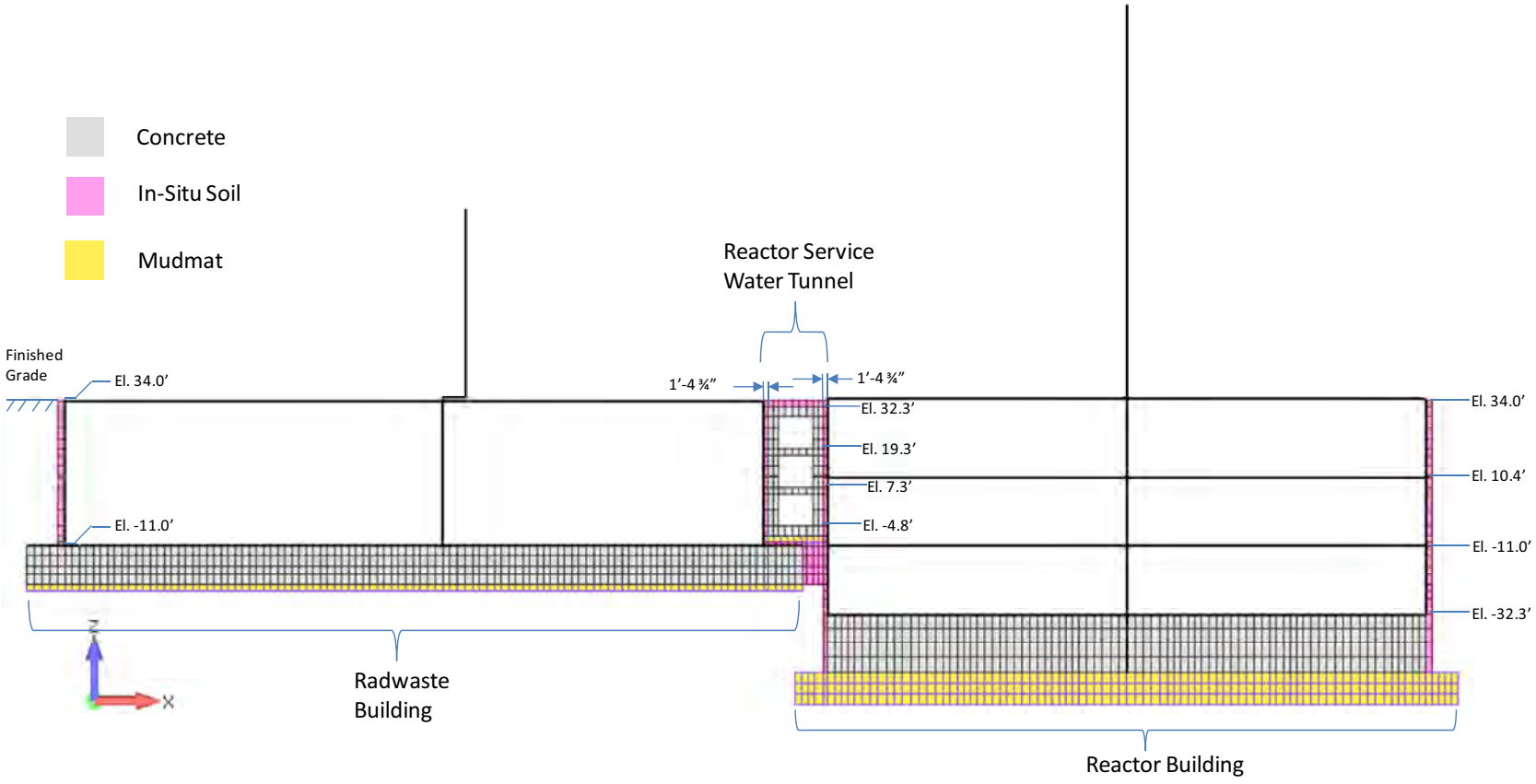

Figure 3H.6-210 SSSI 2D Model of RB + RSW Piping Tunnel + RWB

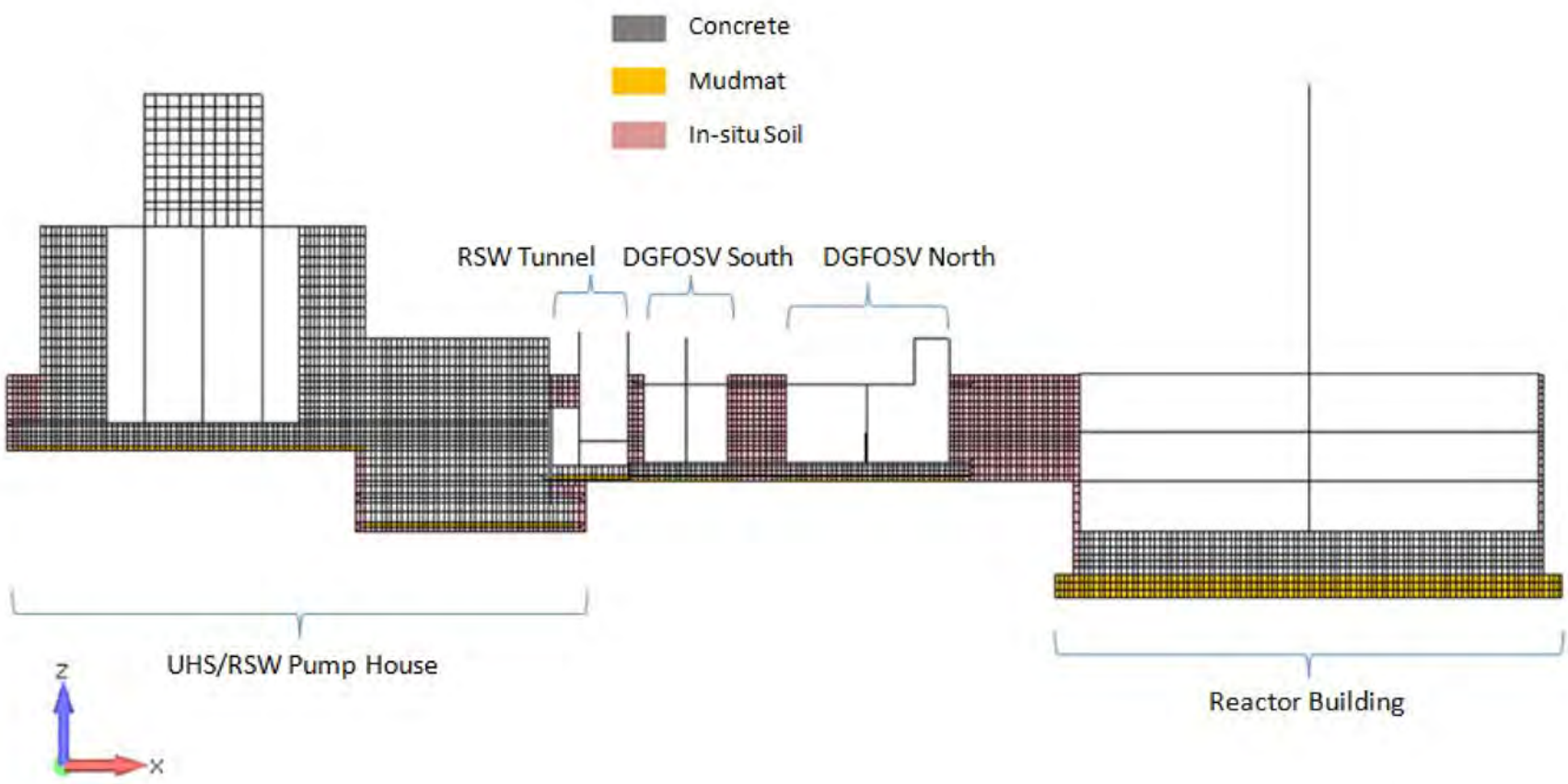

Figure 3H.6-211 2D Model of UHS/RSW Pump House, RSW Piping Tunnel, DGFOSVs and RB

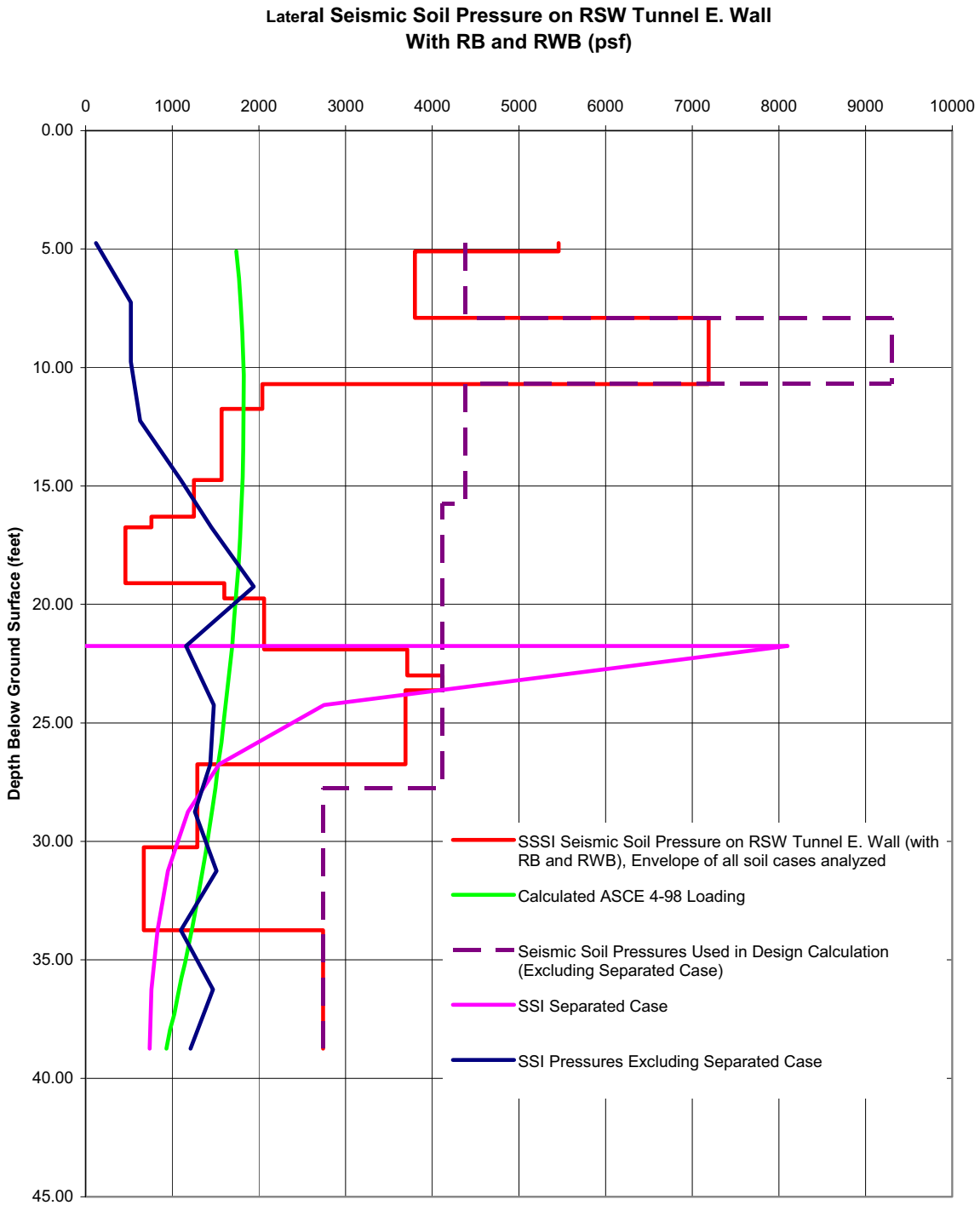

Figure 3H.6-212 Lateral Seismic Soil Pressures (psf) on RSW Piping Tunnel East Wall (Main Cross Section of RSW Piping Tunnel)

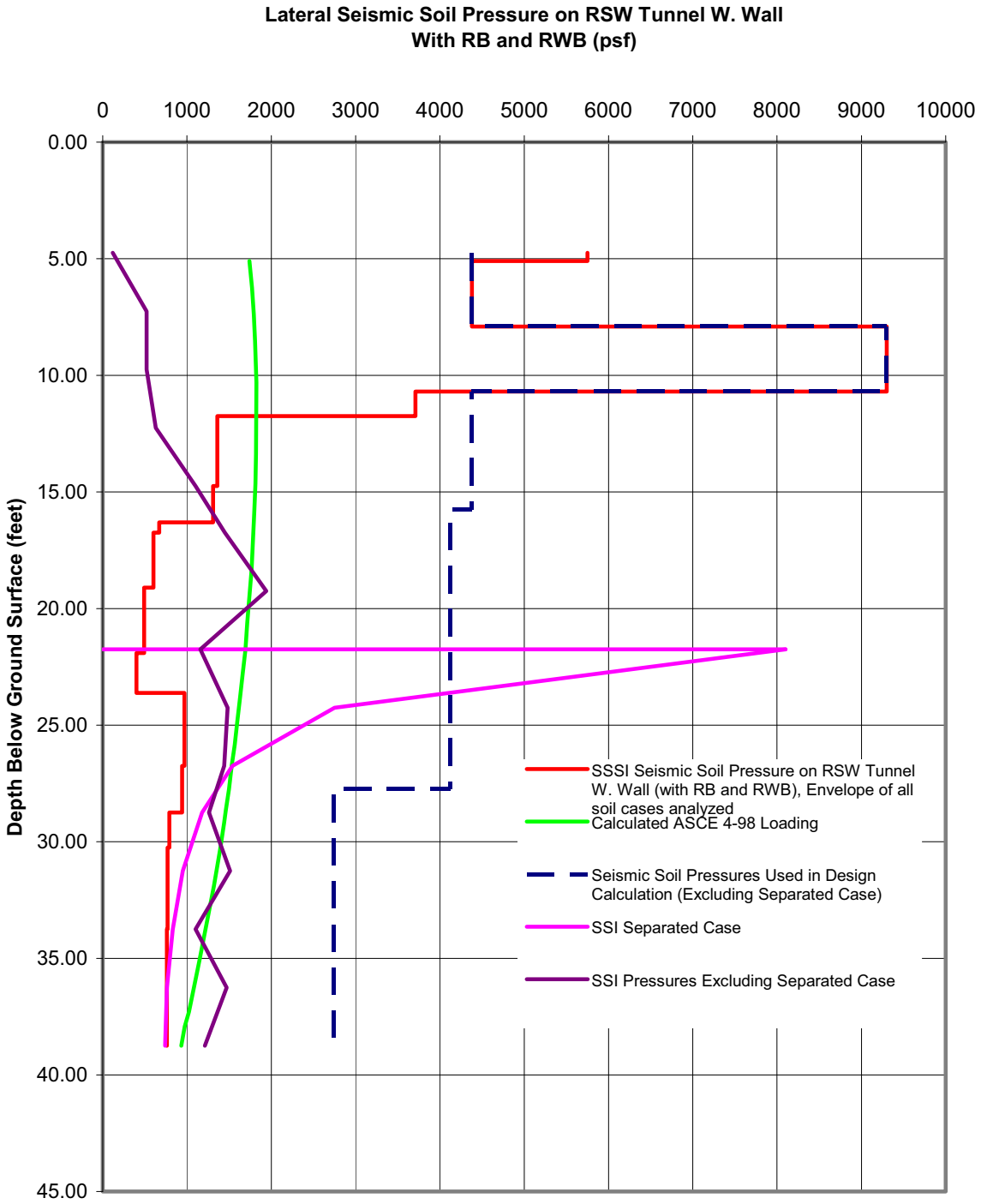

Figure 3H.6-213 Lateral Seismic Soil Pressures (psf) on RSW Piping Tunnel West Wall (Main Cross Section of RSW Piping Tunnel)

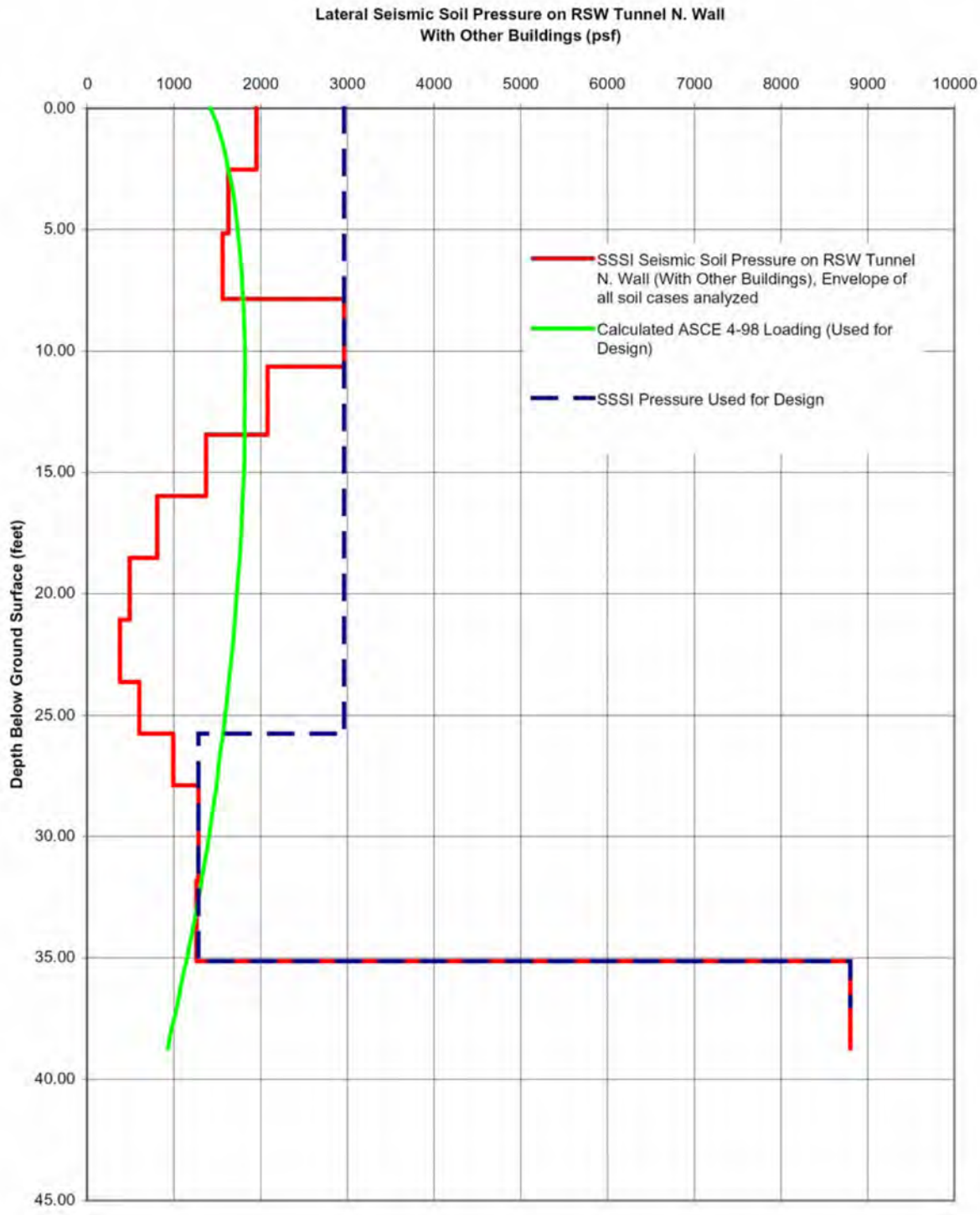

Figure 3H.6-214 Lateral Seismic Soil Pressures (psf) on RSW Piping Tunnel North Wall (RSW Piping Tunnel near UHS/RSW Pump House)

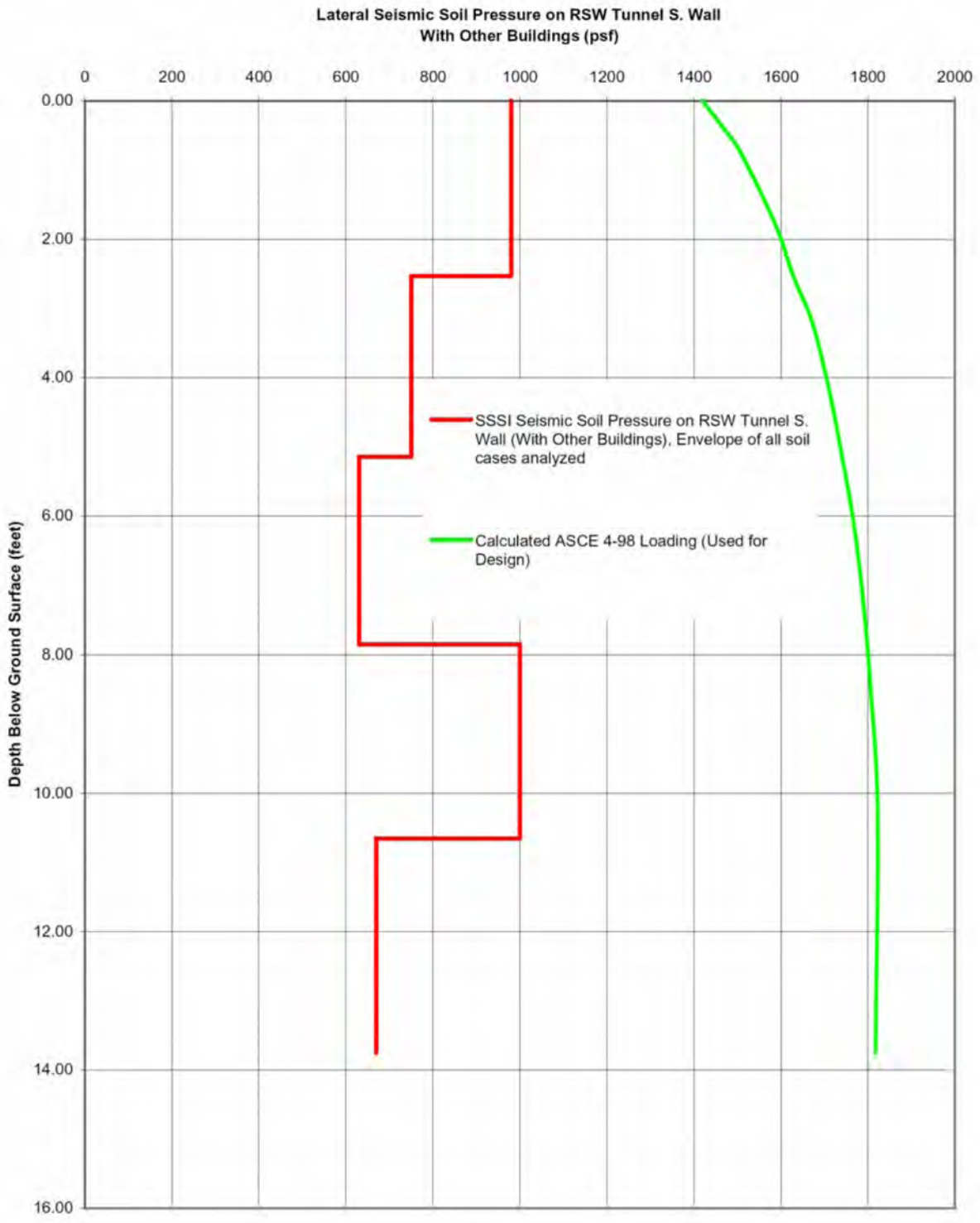

Figure 3H.6-215 Lateral Seismic Soil Pressures (psf) on RSW Piping Tunnel South Wall (RSW Piping Tunnel near UHS/RSW Pump House)

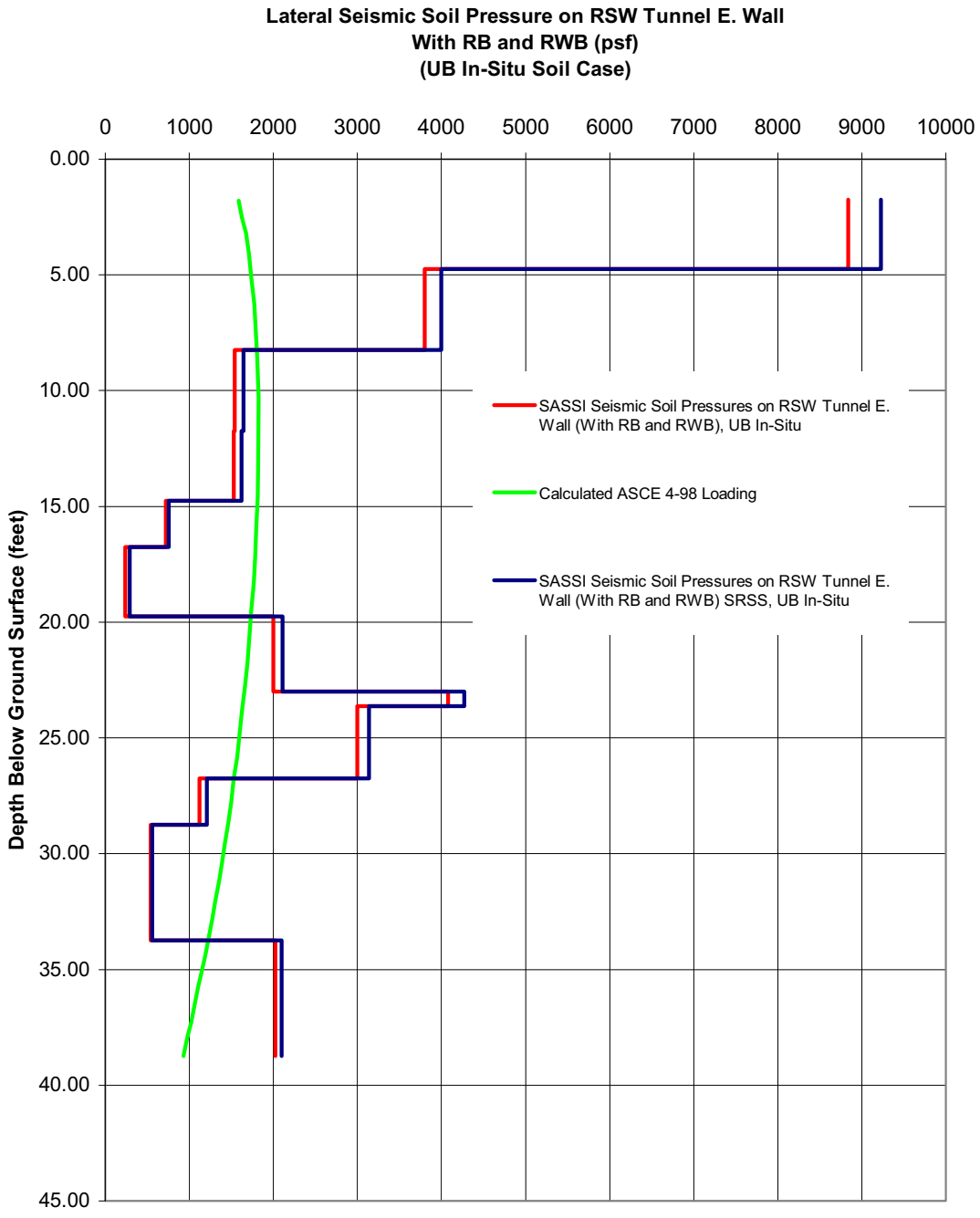

Figure 3H.6-216 Lateral Seismic Soil Pressures (psf) on RSW Piping Tunnel East Wall For UB In-Situ Soil Case (Main Cross Section of RSW Piping Tunnel, Including Effect of Vertical Excitation)

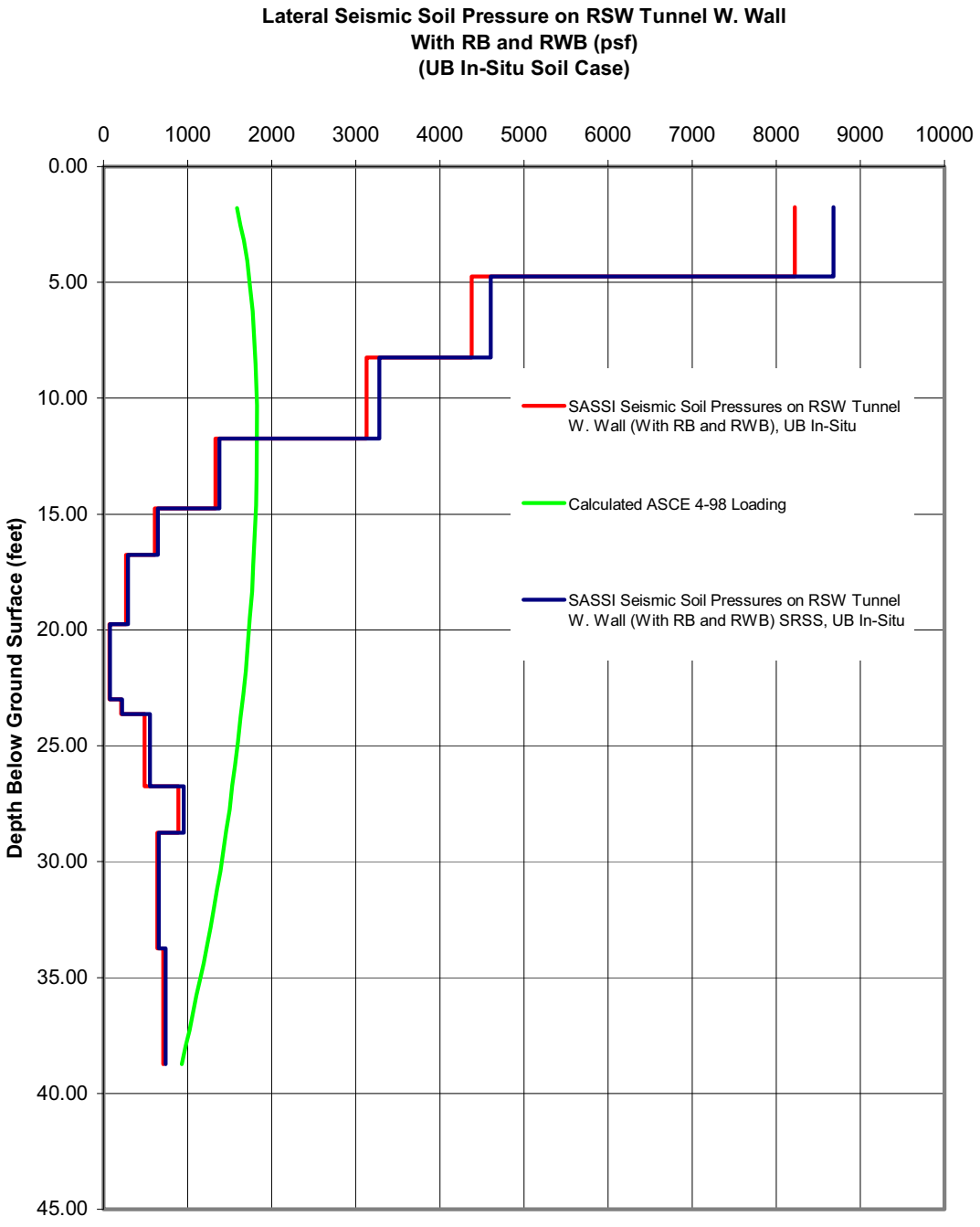

Figure 3H.6-217 Lateral Seismic Soil Pressures (psf) on RSW Piping Tunnel West Wall For UB In-Situ Soil Case (Main Cross Section of RSW Piping Tunnel, Including Effect of Vertical Excitation)

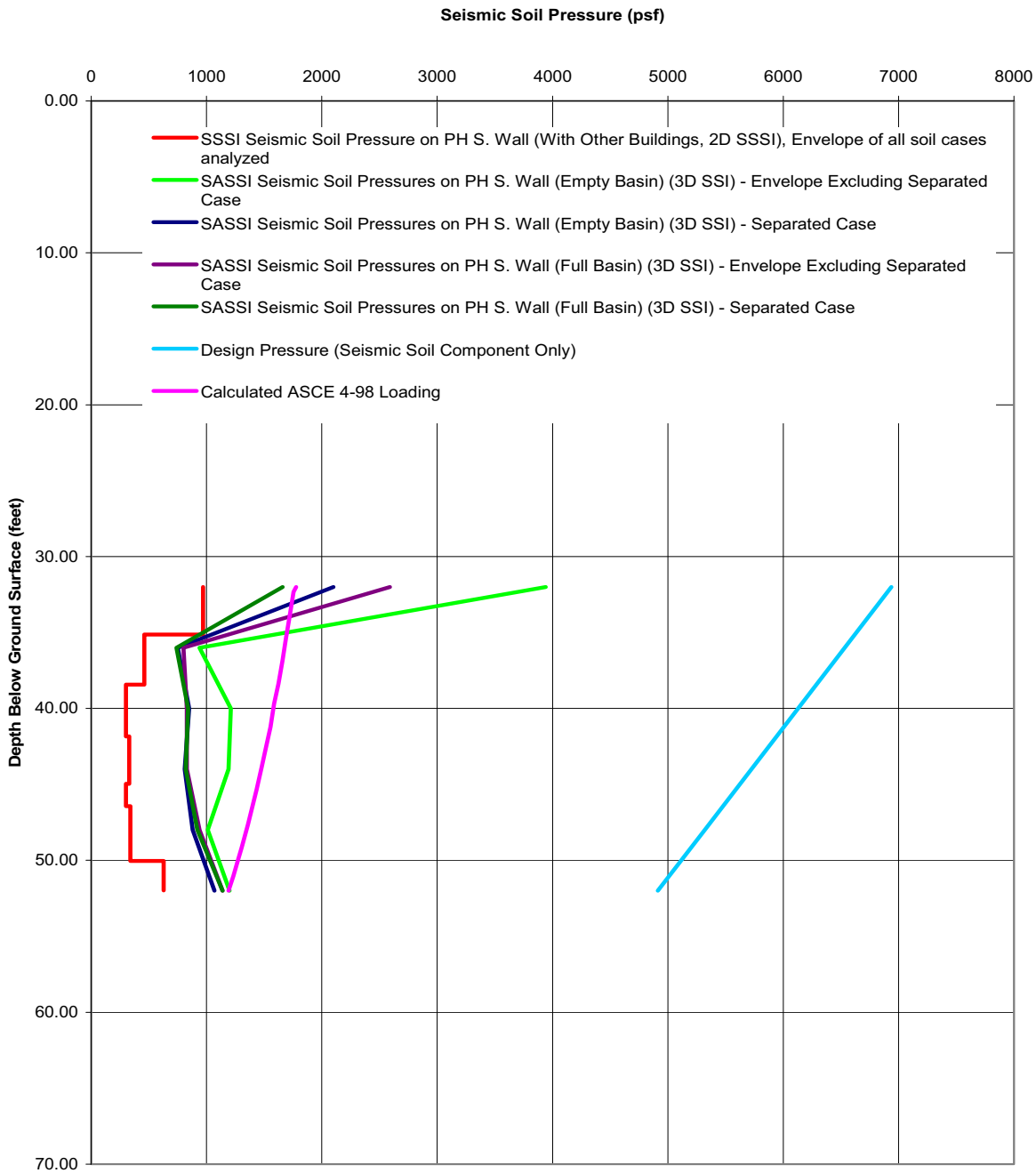

Figure 3H.6-218 SSI, SSSI, ASCE 4-98 and Design Lateral Seismic Soil Pressures on RSW Pump House South Wall

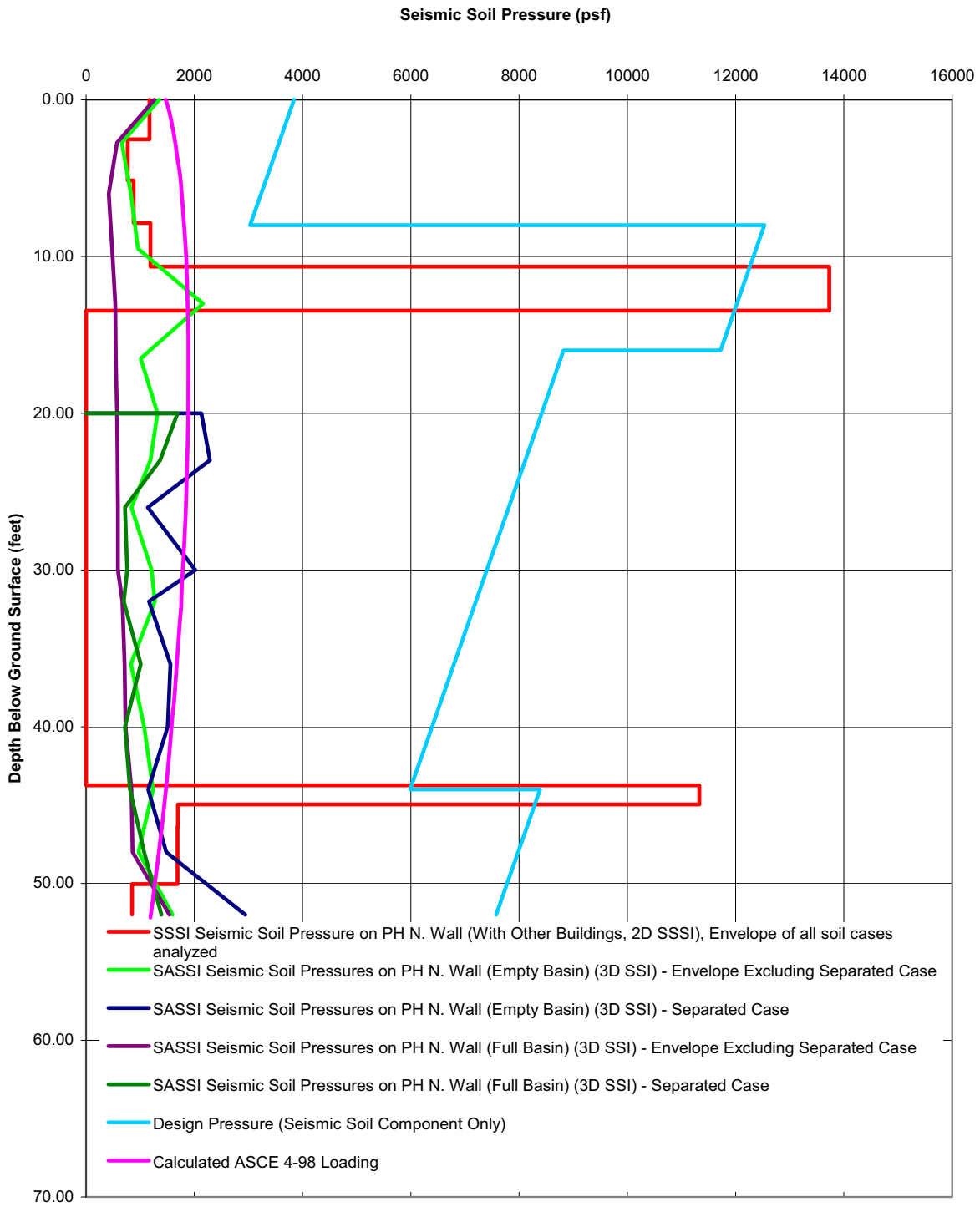

Figure 3H.6-219 SSI, SSSI, ASCE 4-98 and Design Lateral Seismic Soil Pressures on RSW Pump House North Wall

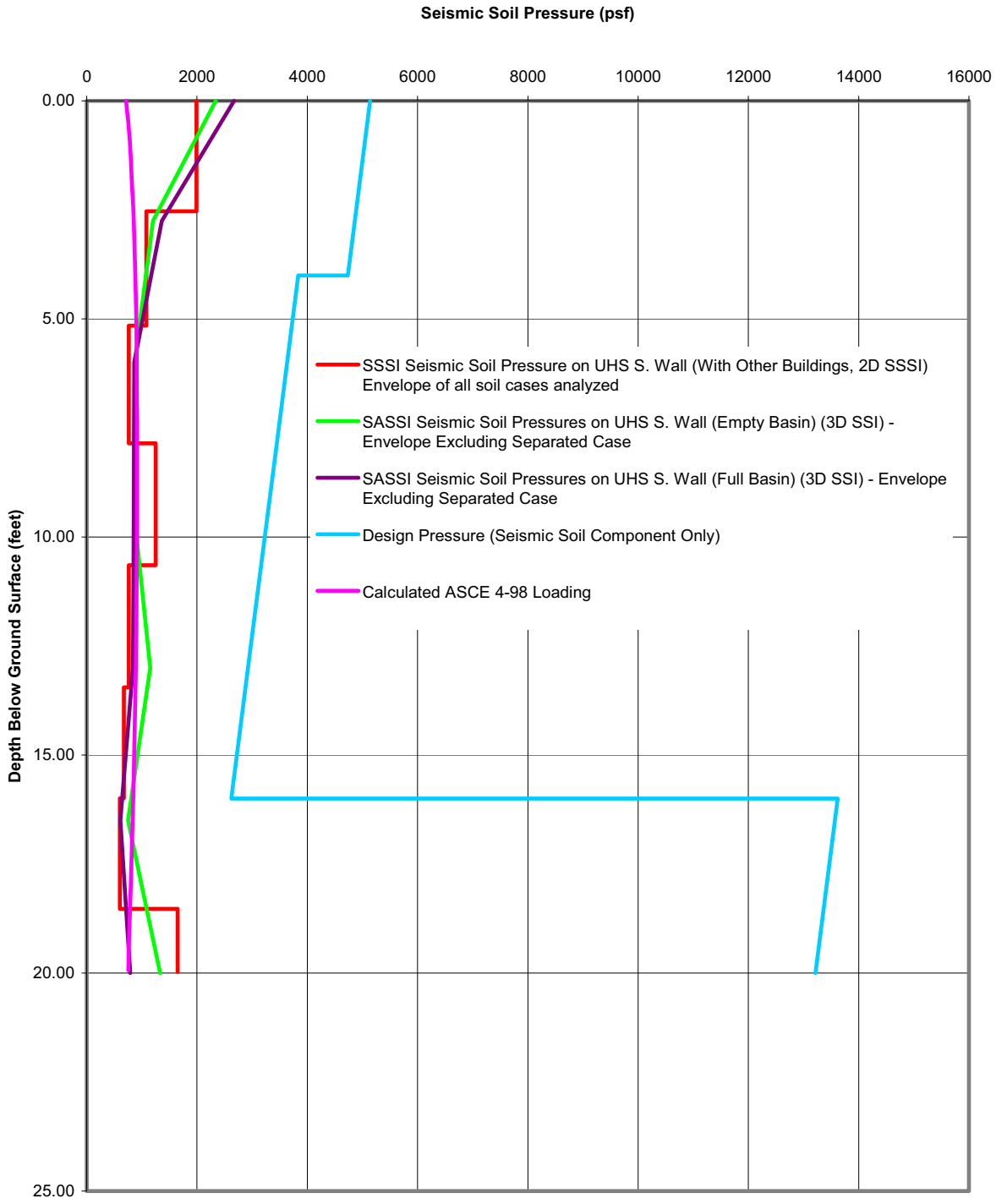

Figure 3H.6-220 SSI, SSSI, ASCE 4-98 and Design Lateral Seismic Soil Pressures on Ultimate Heat Sink Basin South Wall

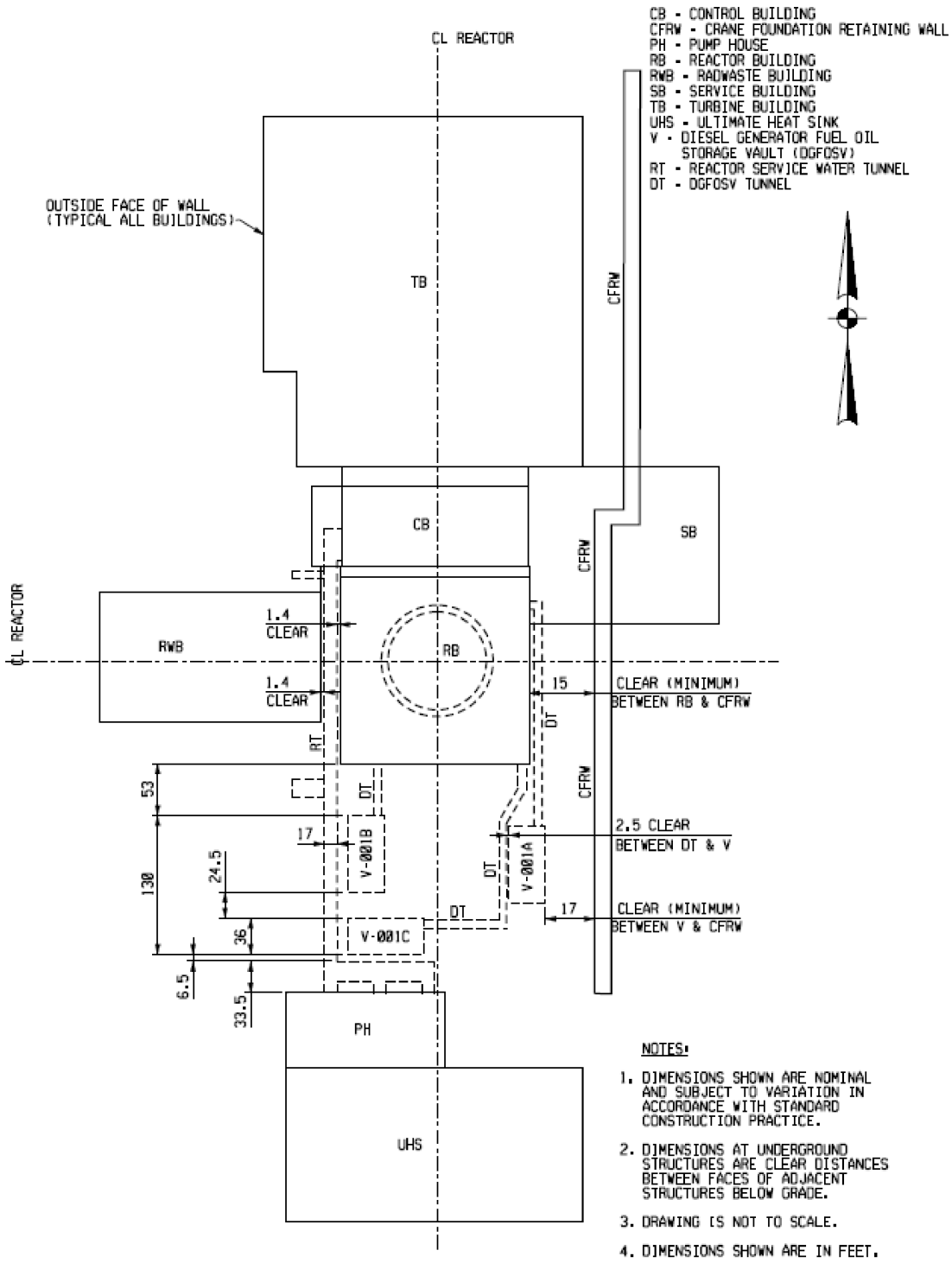

Figure 3H.6-221 Partial Site Plan

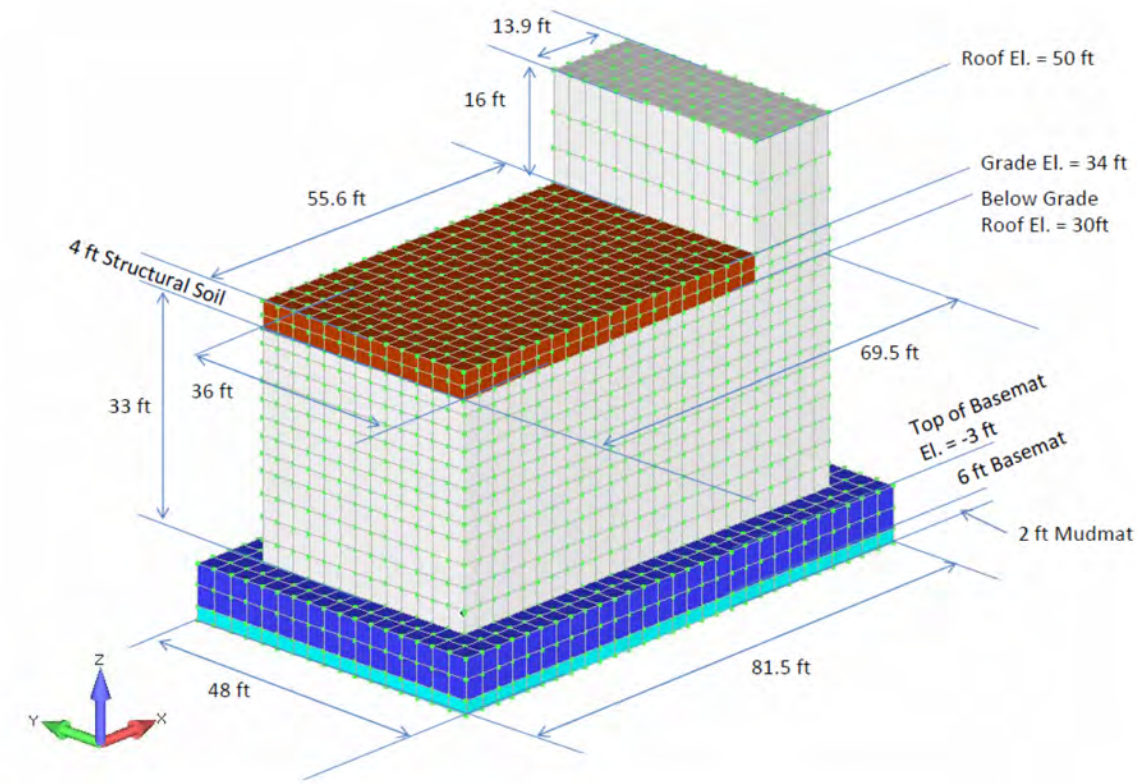

Figure 3H.6-222 3D Model of DGFOSV for SSI Analysis

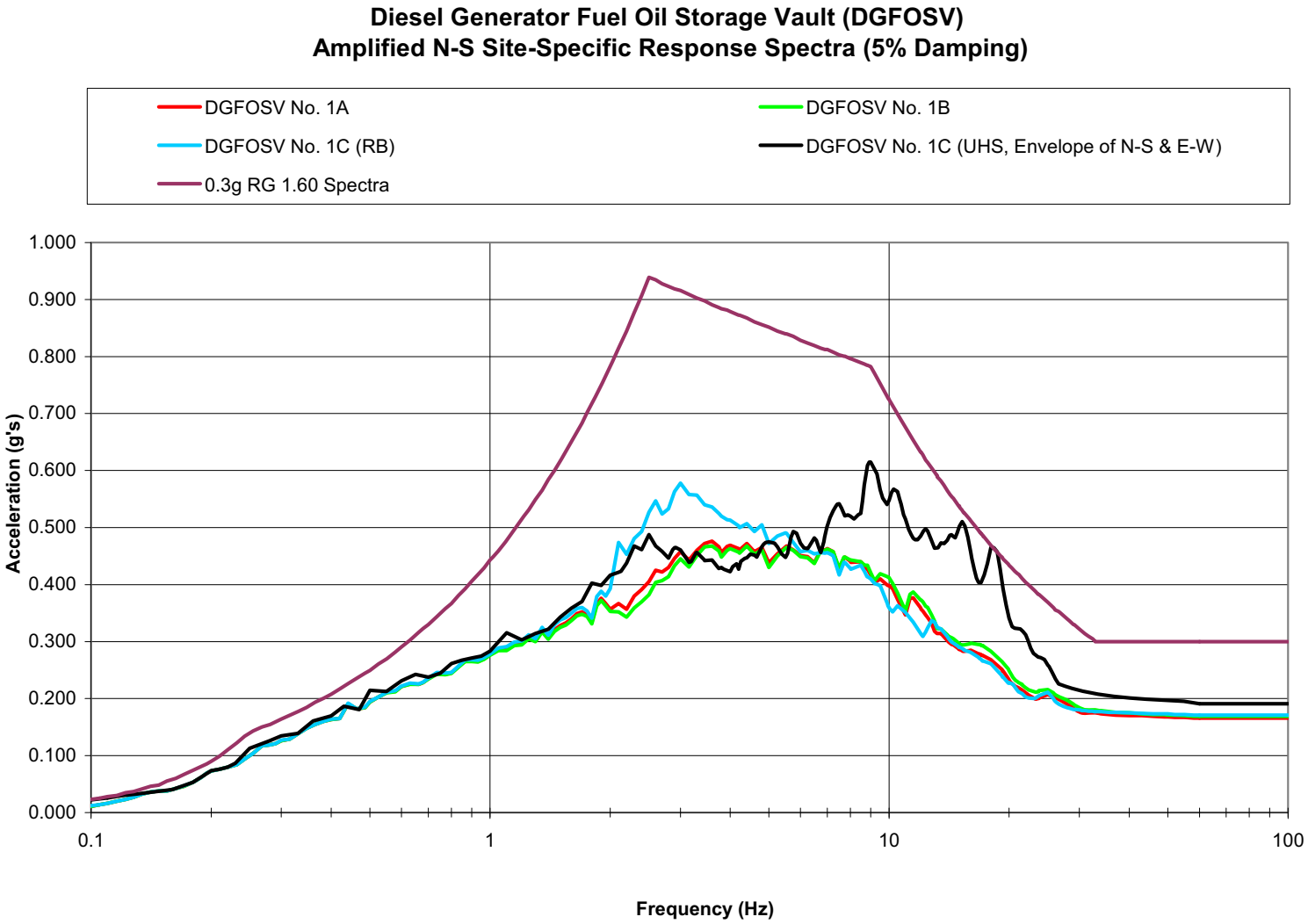

Figure 3H.6-222a Amplified N-S Site-Specific Response Spectra Diesel Generator Fuel Oil Storage Vault (DGFOSV)

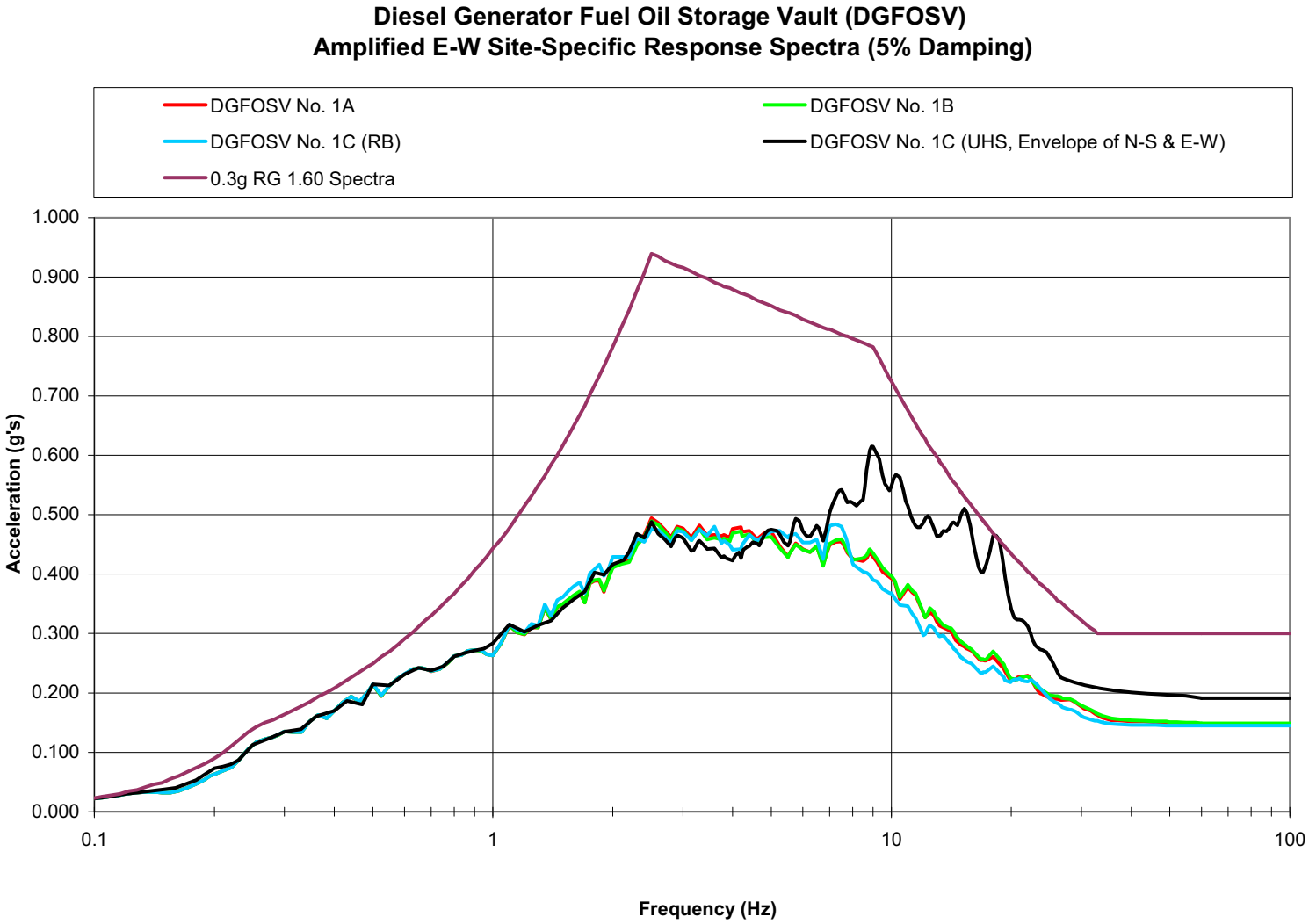

Figure 3H.6-222b Amplified E-W Site-Specific Response Spectra Diesel Generator Fuel Oil Storage Vault (DGFOSV)

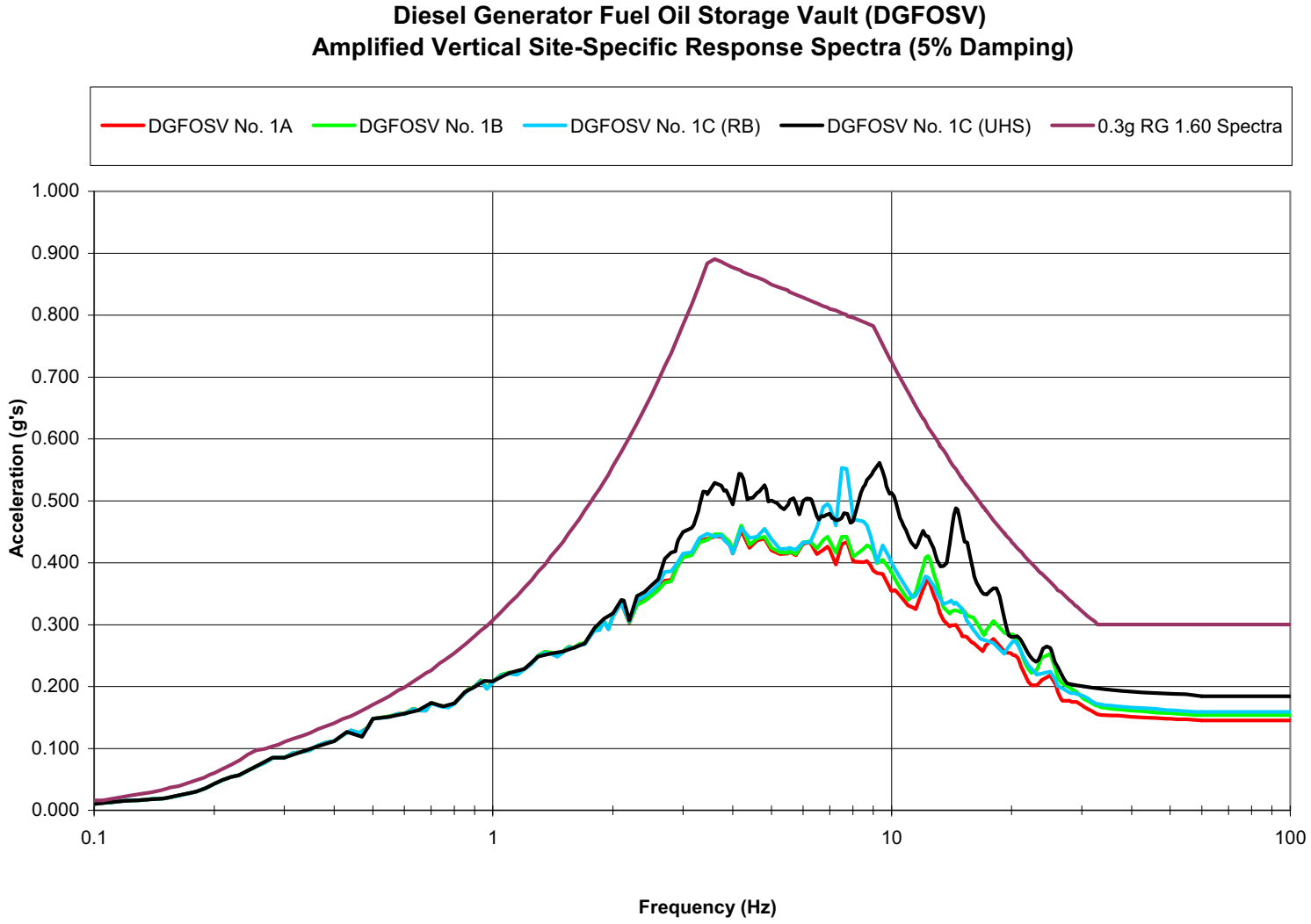

Figure 3H.6-222c Amplified Vertical Site-Specific Response Spectra Diesel Generator Fuel Oil Storage Vault (DGFOSV)

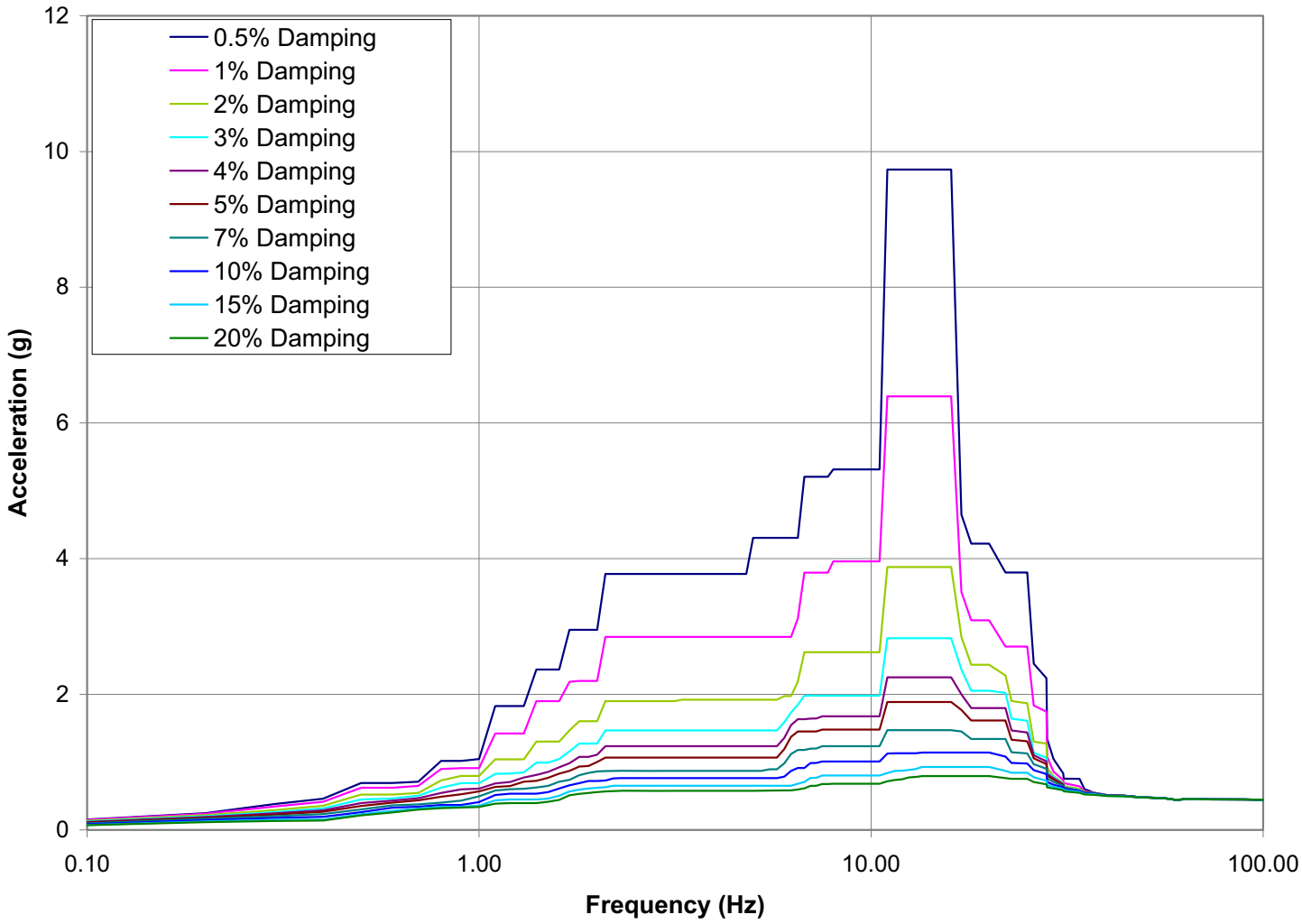

Figure 3H.6-223 Enveloped Broadened Horizontal Direction Response Spectra for DGFOSV

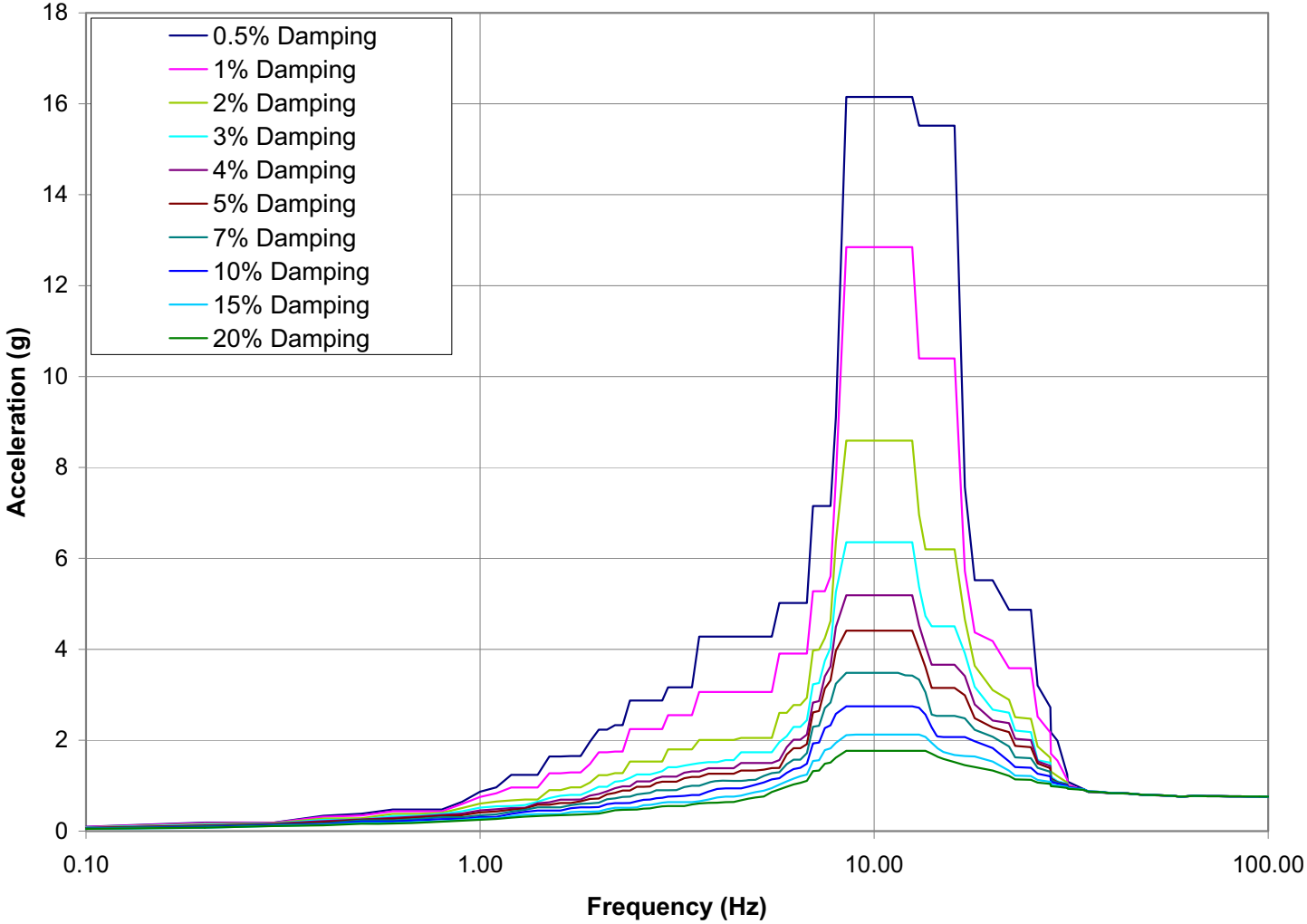

Figure 3H.6-224 Enveloped Broadened Vertical Direction Response Spectra for DGFOSV

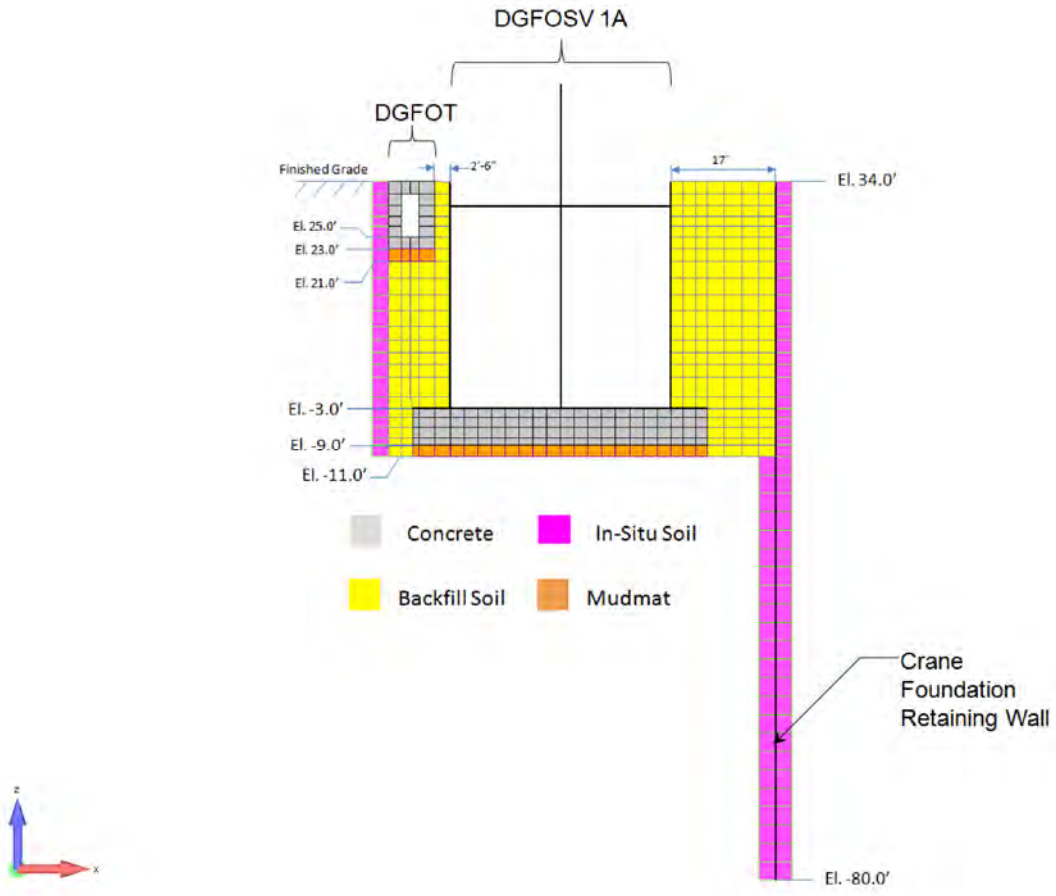

Figure 3H.6-225 2D SSSI Model of DGFOT, DGFOSV and Crane Foundation Retaining Wall

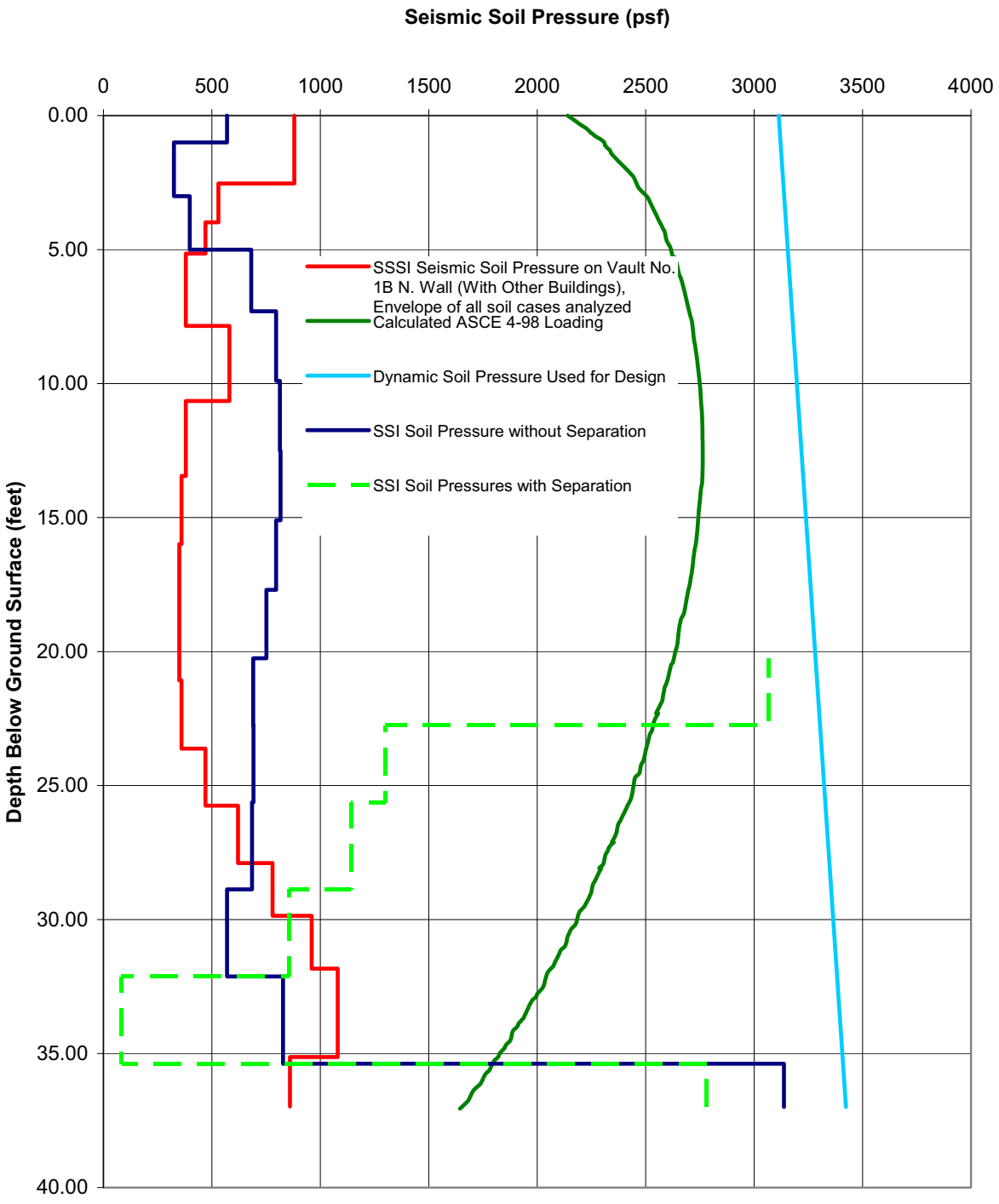

Figure 3H.6-226 SSI, SSSI, ASCE 4-98 and Design Lateral Seismic Soil Pressures on Diesel Generator Fuel Oil Storage Vault No. 1B North Wall

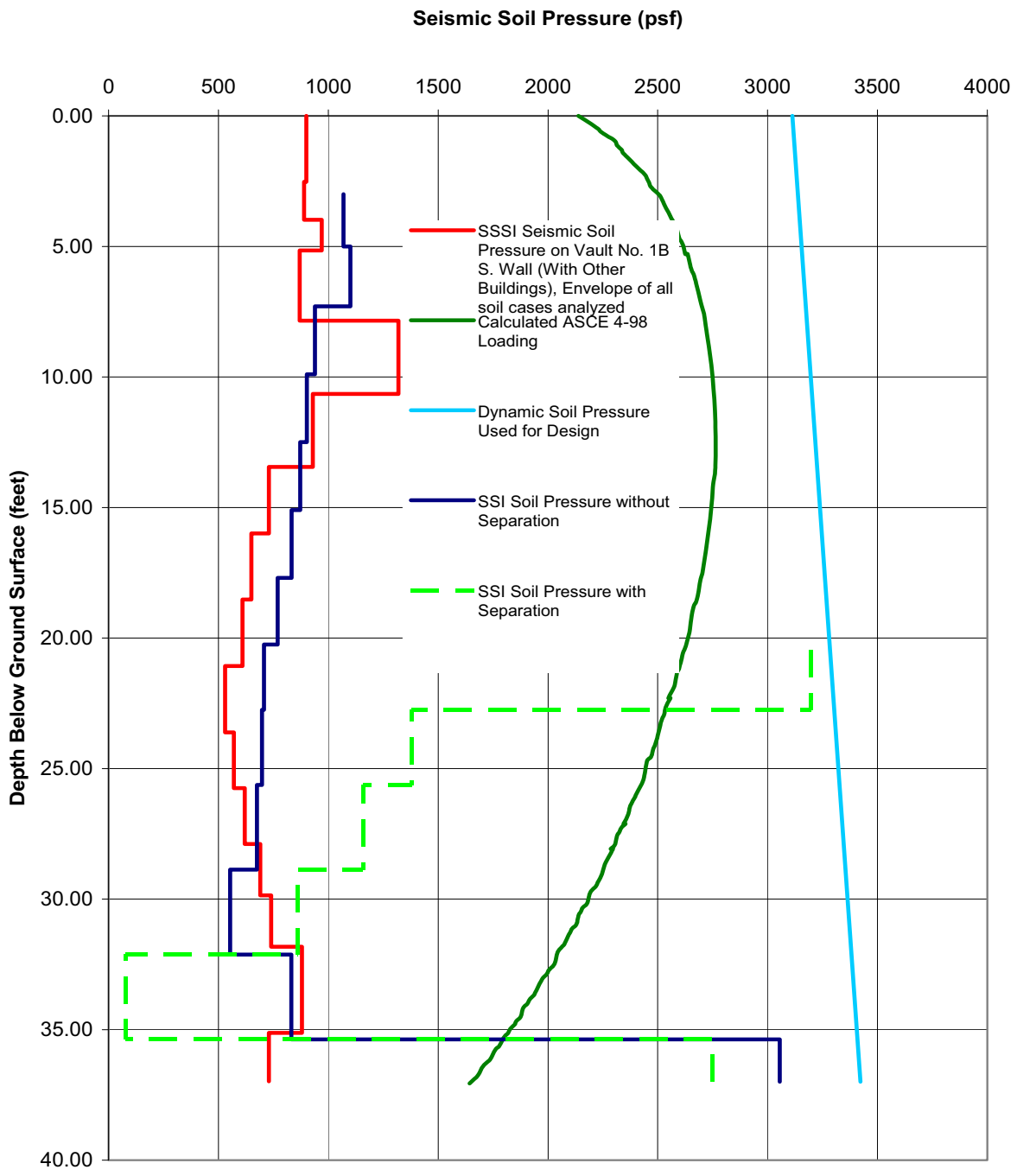

Figure 3H.6-227 SSI, SSSI, ASCE 4-98 and Design Lateral Seismic Soil Pressures on Diesel Generator Fuel Oil Storage Vault No. 1B South Wall

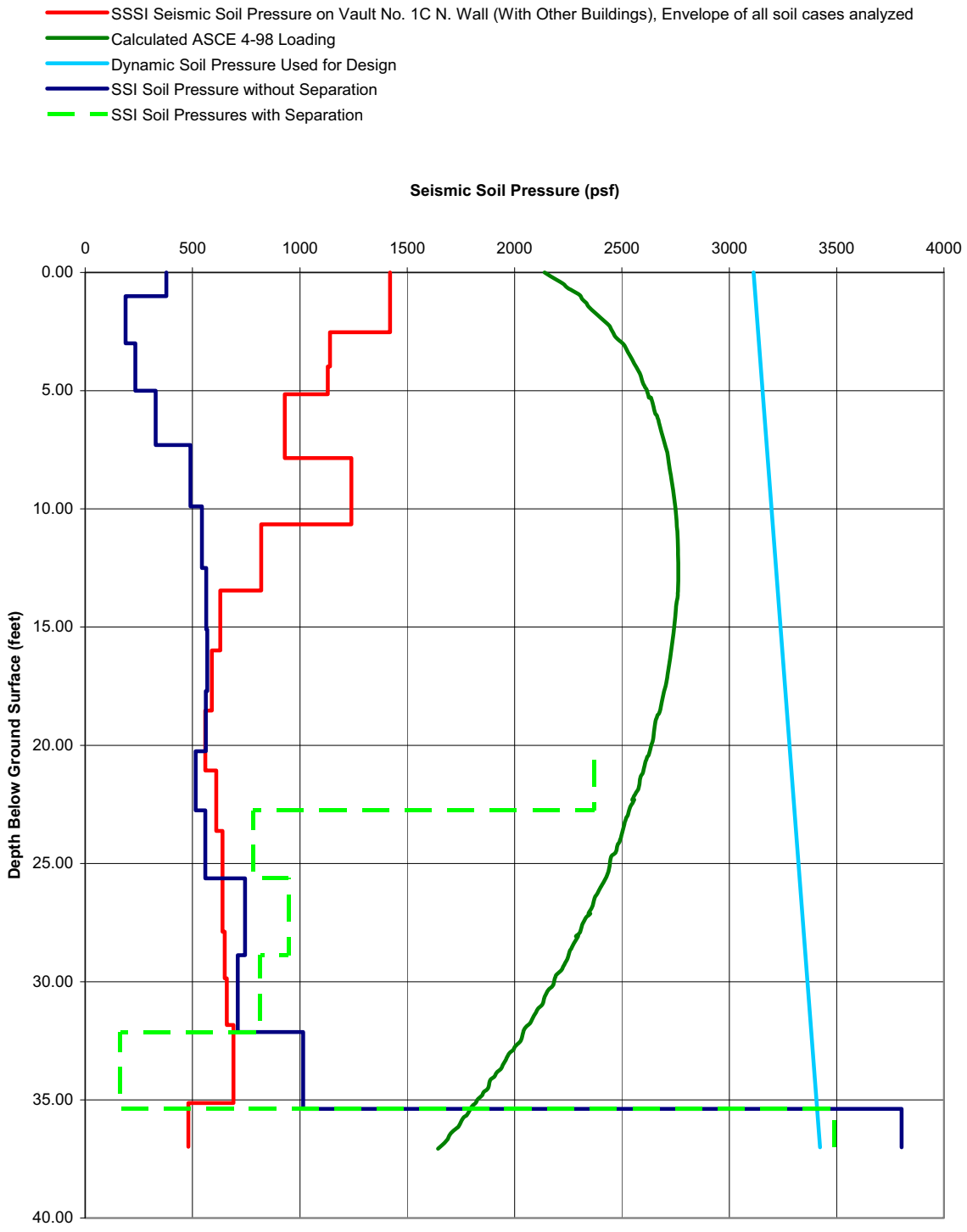

Figure 3H.6-228 SSI, SSSI, ASCE 4-98 and Design Lateral Seismic Soil Pressures on Diesel Generator Fuel Oil Storage Vault No. 1C North Wall

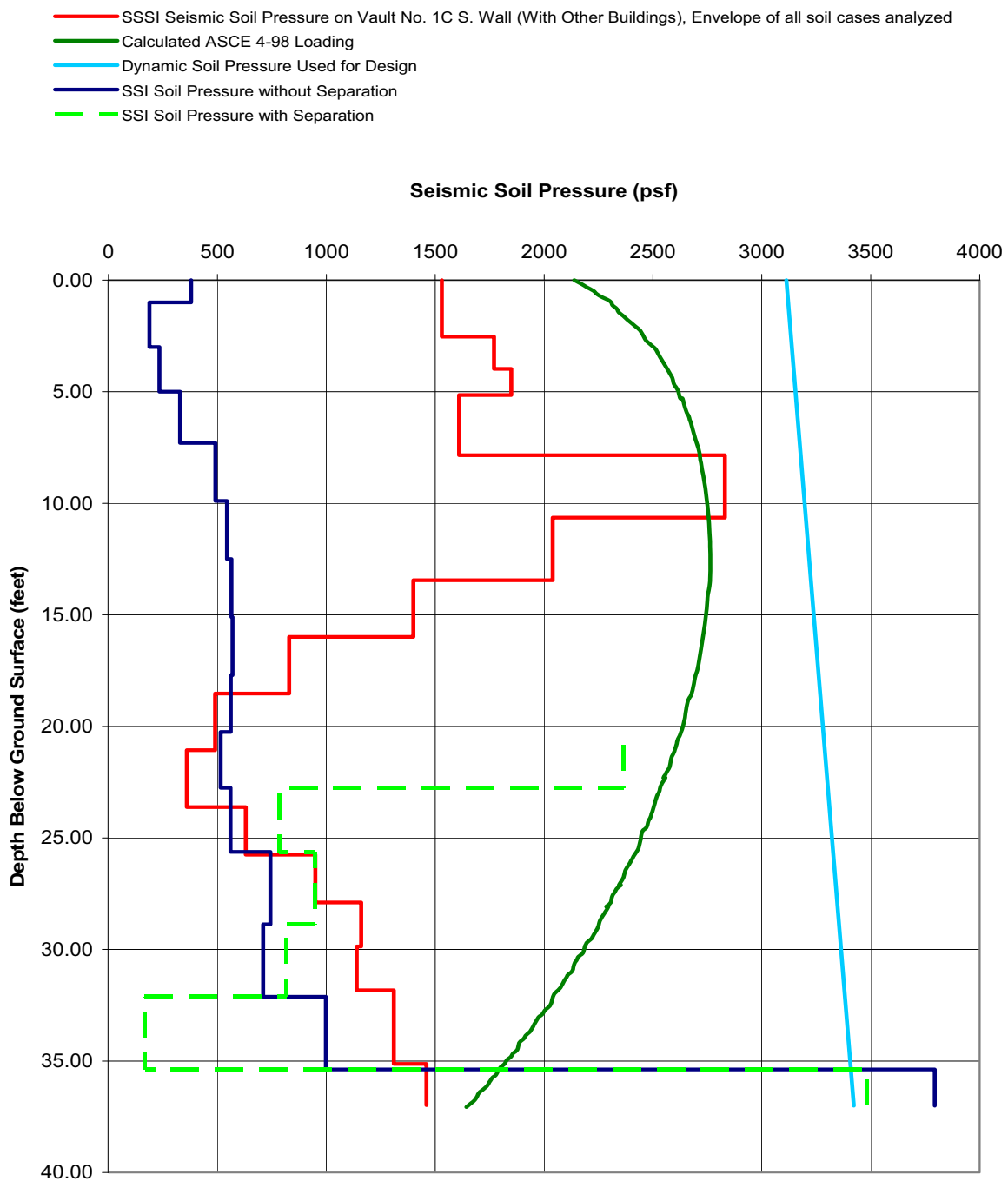

Figure 3H.6-229 SSI, SSSI, ASCE 4-98 and Design Lateral Seismic Soil Pressures on Diesel Generator Fuel Oil Storage Vault No. 1C South Wall

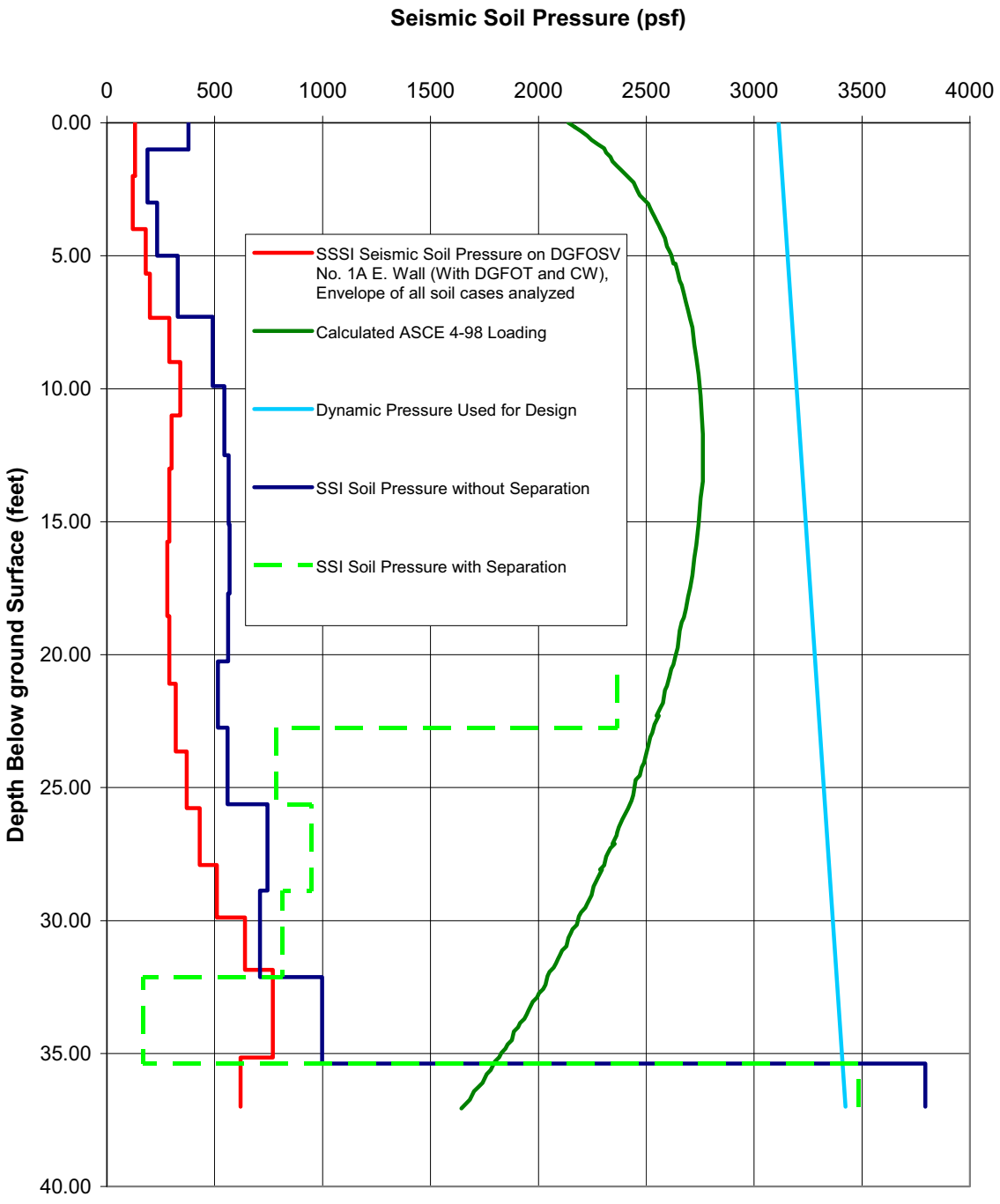

Figure 3H.6-230 SSI, SSSI, ASCE 4-98 and Design Lateral Seismic Soil Pressures on Diesel Generator Fuel Oil Storage Vault No. 1A East Wall

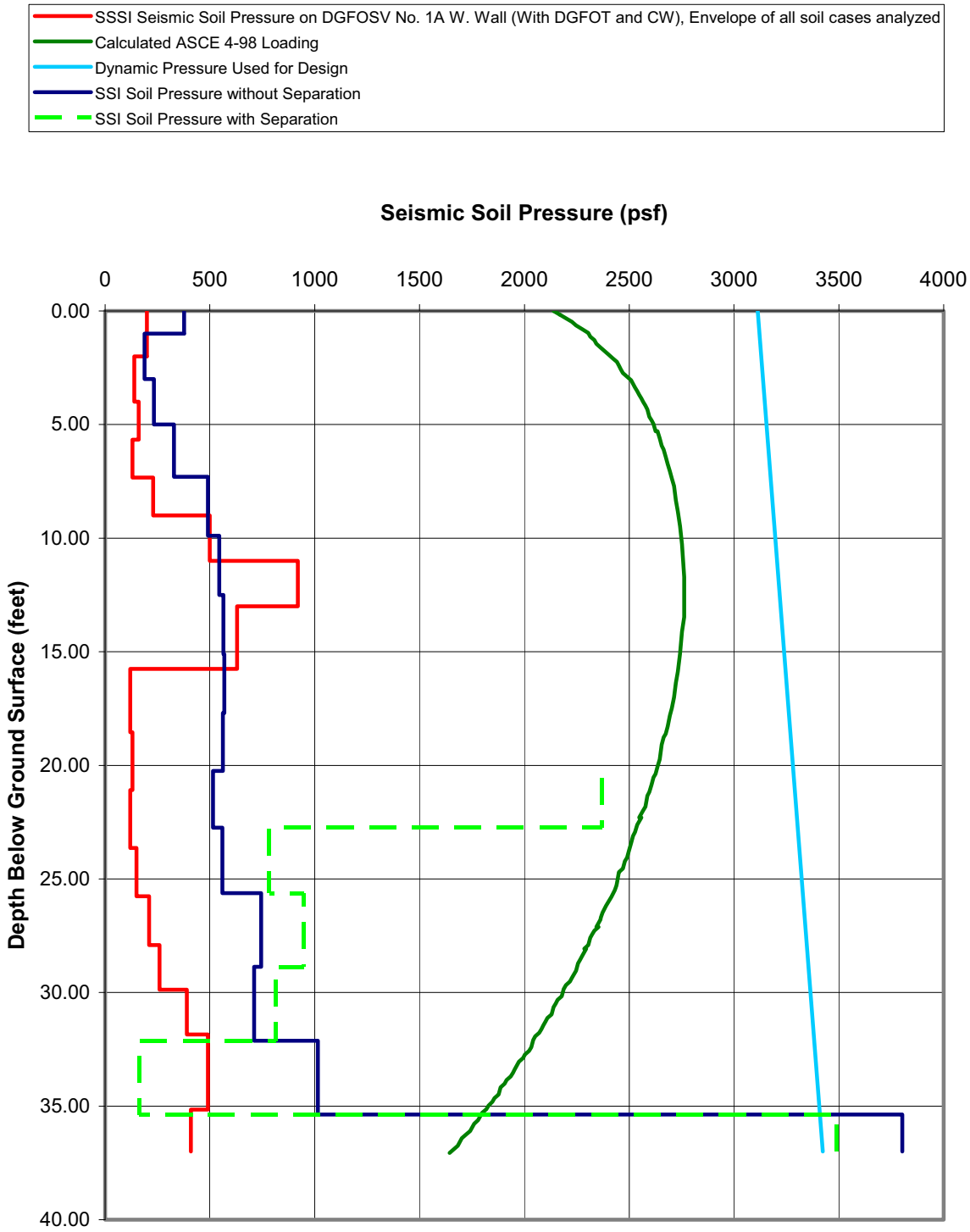

Figure 3H.6-231 SSI, SSSI, ASCE 4-98 and Design Lateral Seismic Soil Pressures on Diesel Generator Fuel Oil Storage Vault No. 1A West Wall

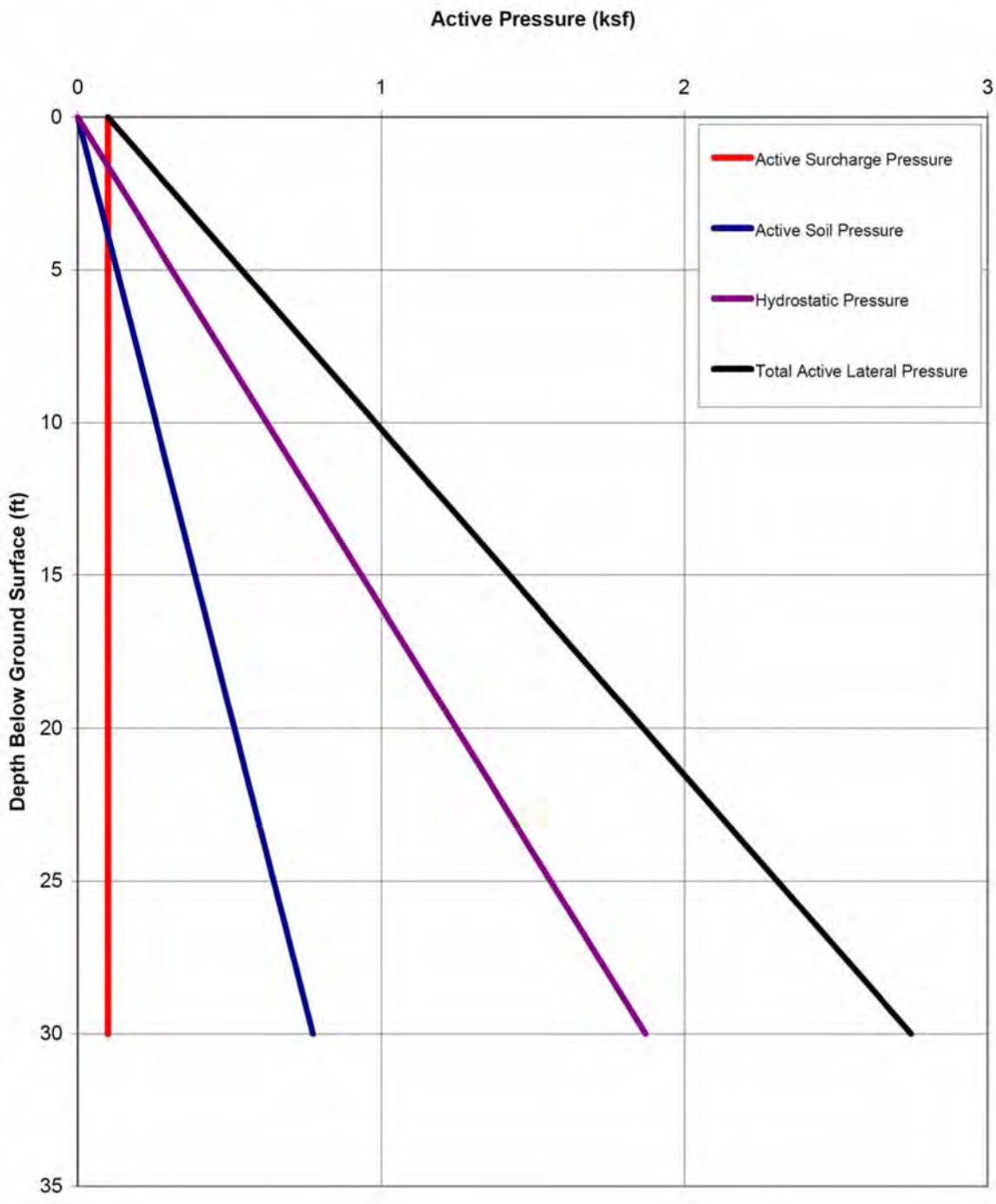

Figure 3H.6-232 Active Lateral Earth Pressure on the UHS Basin Walls

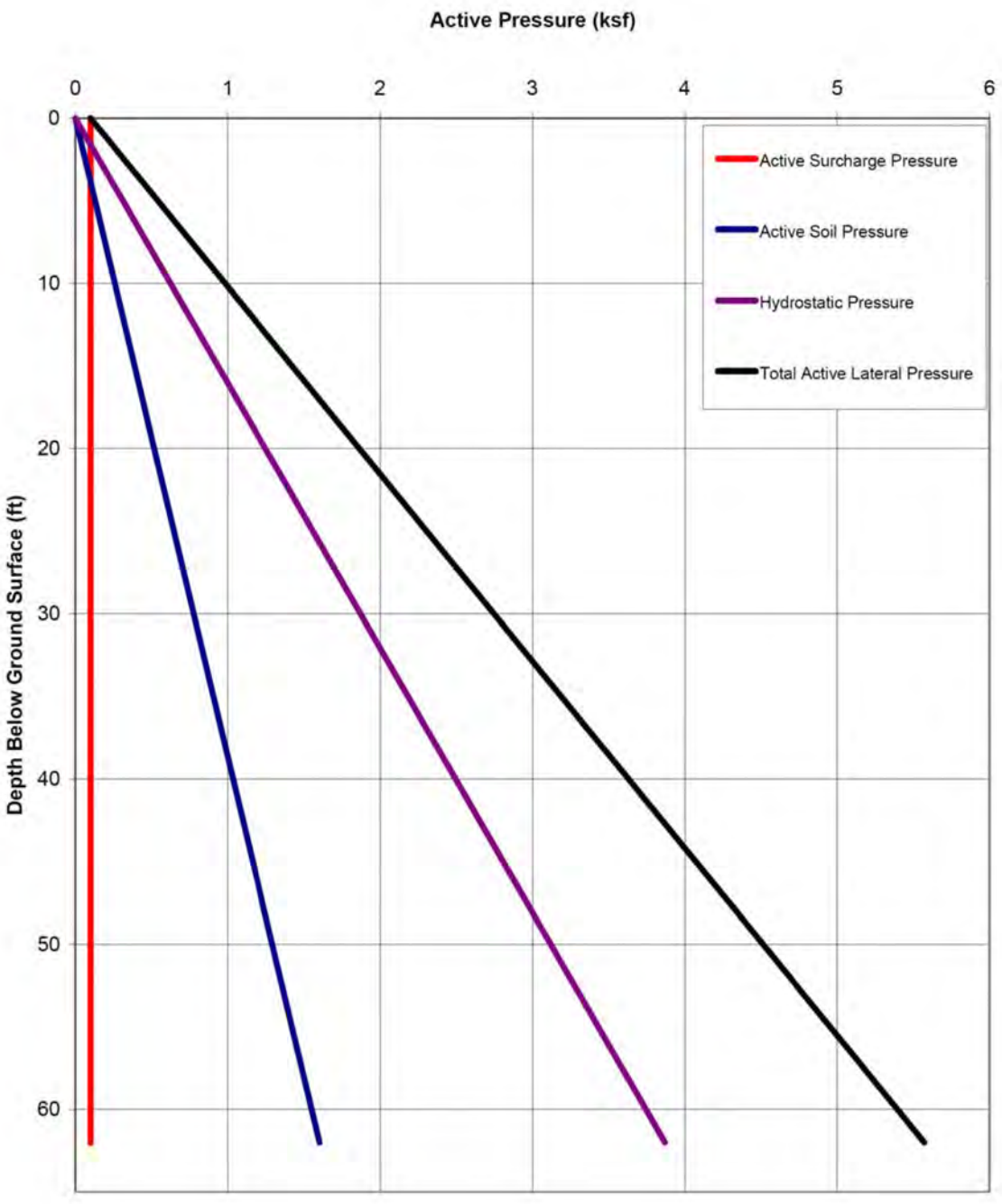

Figure 3H.6-233 Active Lateral Earth Pressure on the North, East and West Walls of the RSW Pump House

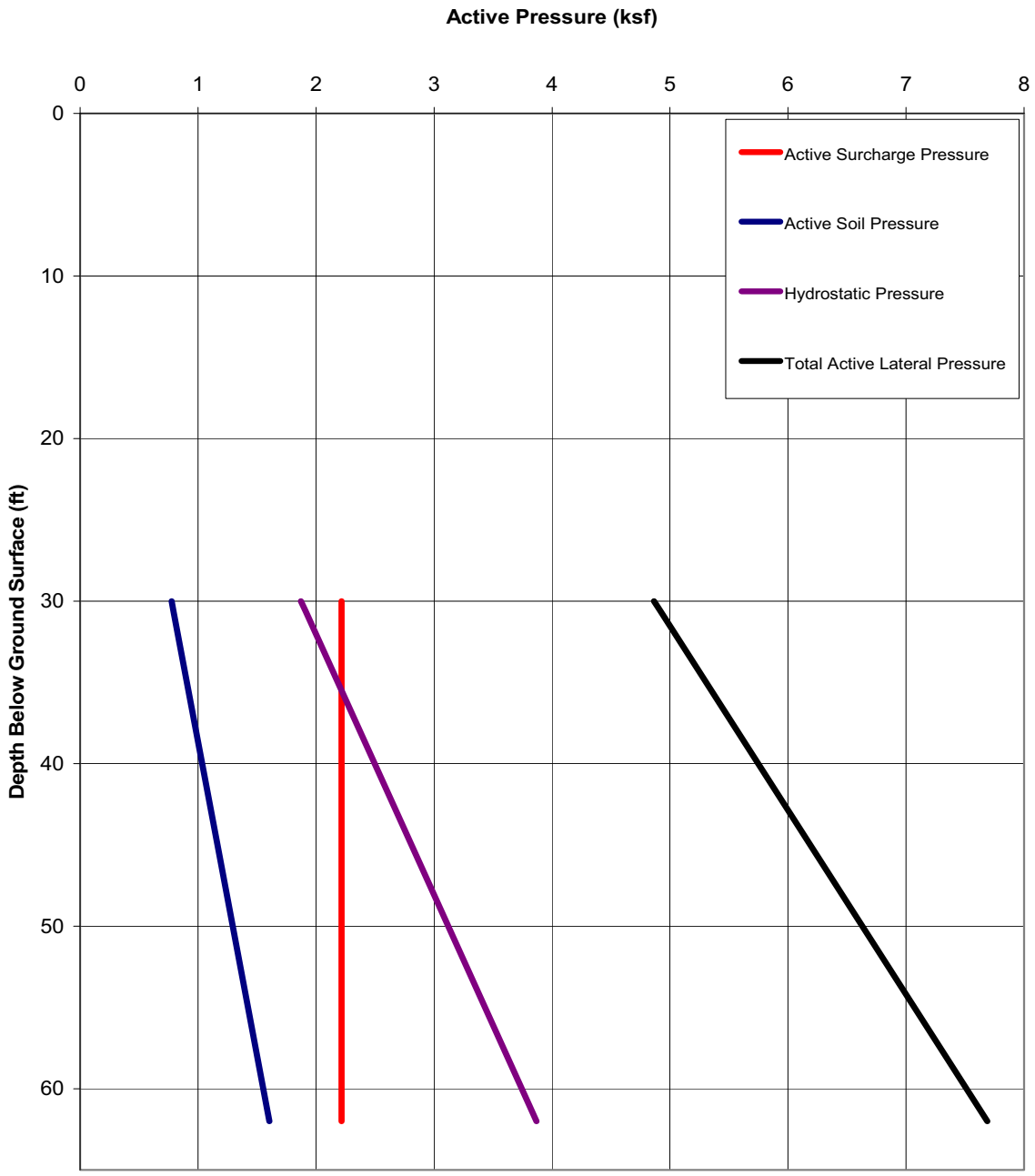

Figure 3H.6-234 Active Lateral Earth Pressure on the South Wall of the RSW Pump House

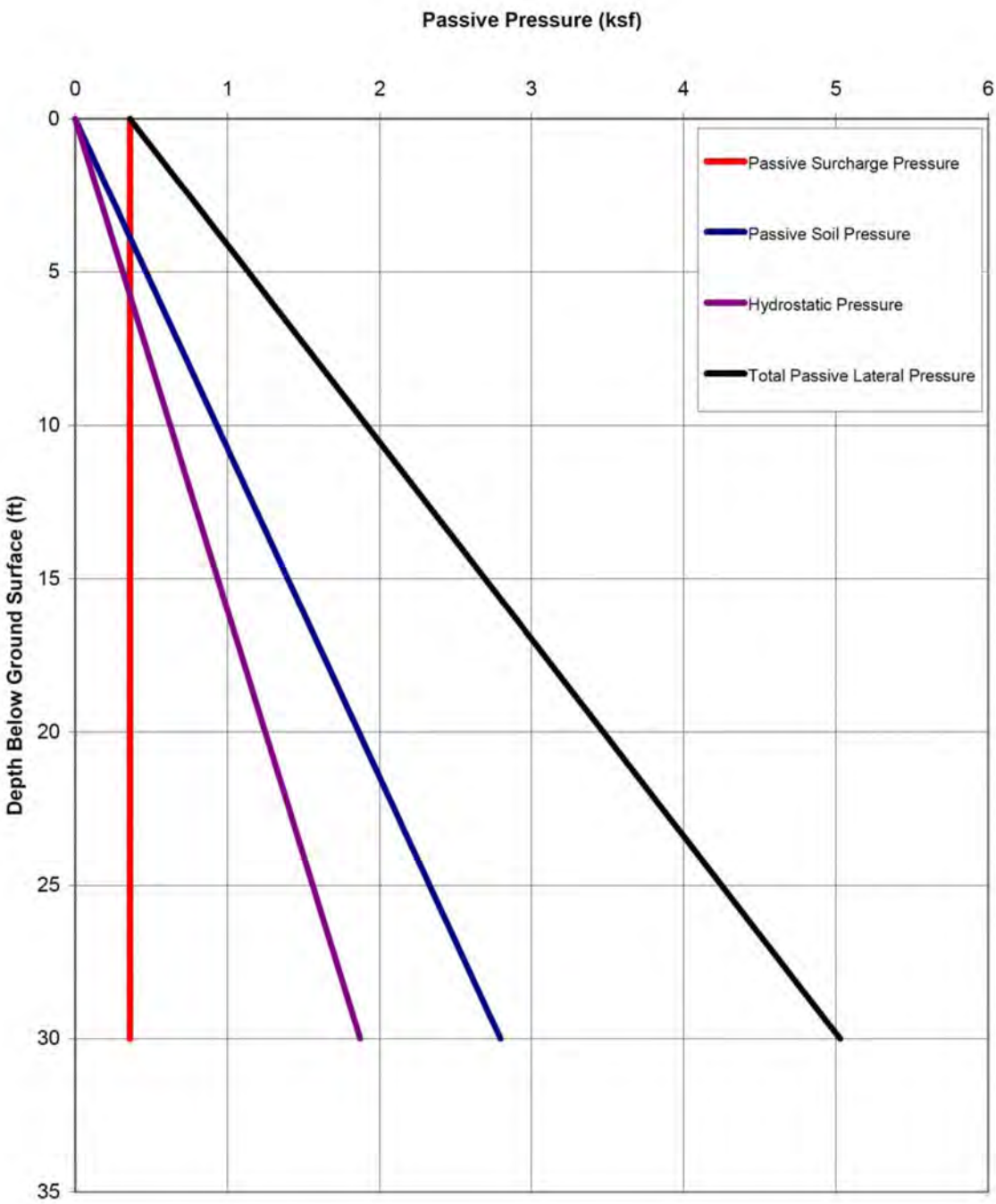

Figure 3H.6-235 Passive Lateral Earth Pressure on the UHS Basin Walls

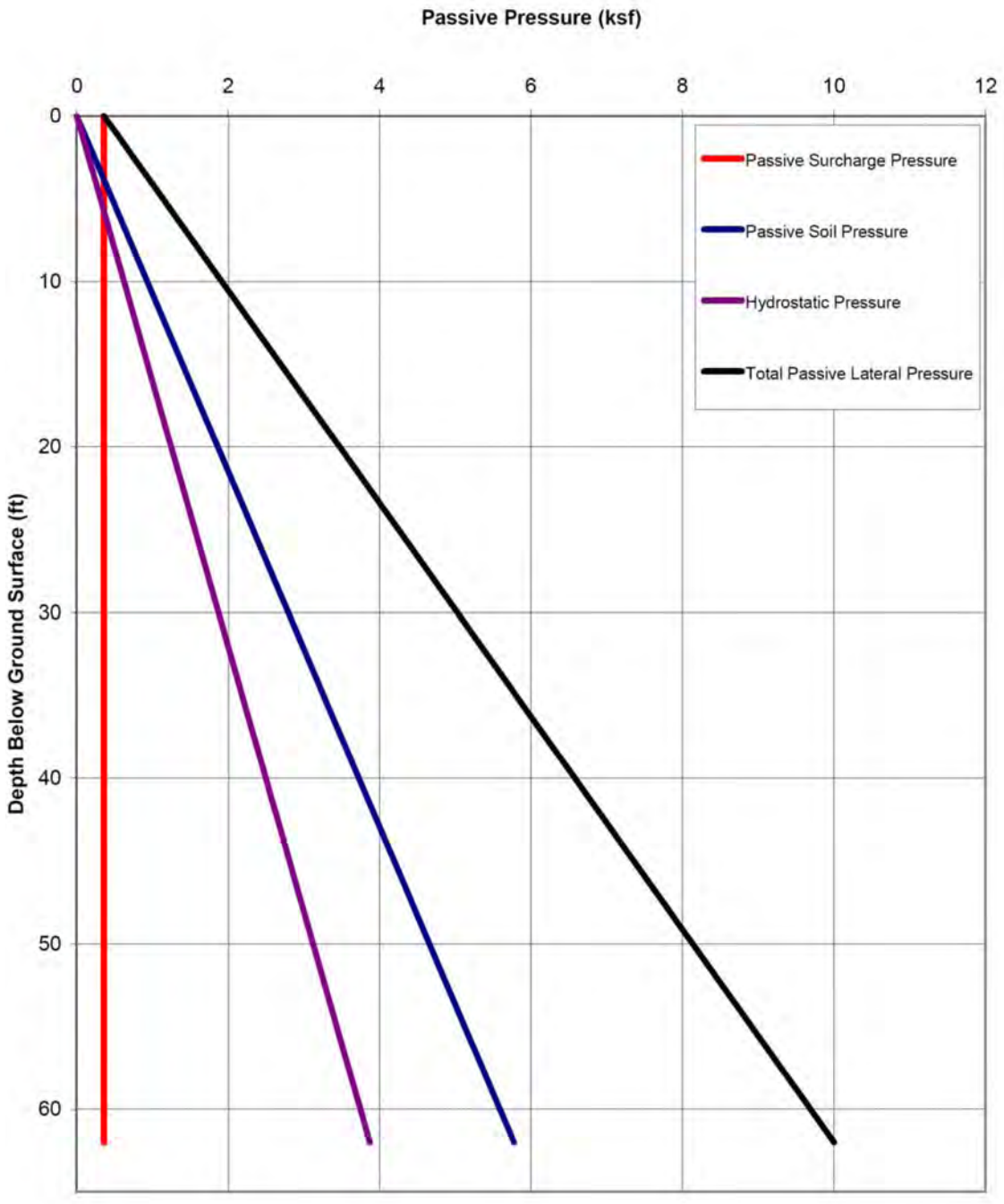

Figure 3H.6-236 Passive Lateral Earth Pressure on the North, East and West Walls of the RSW Pump House

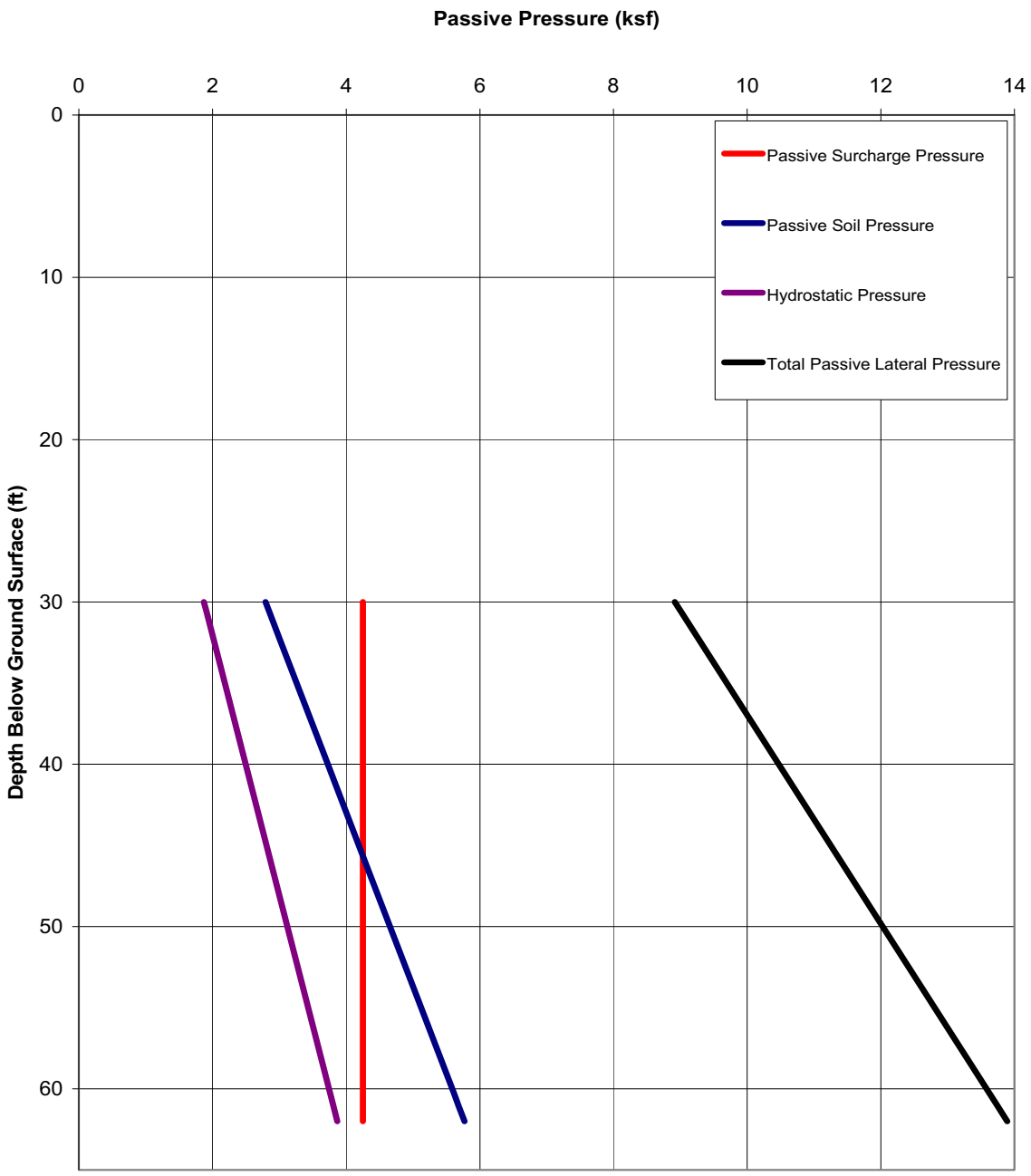

Figure 3H.6-237 Passive Lateral Earth Pressure on the South Wall of the RSW Pump House

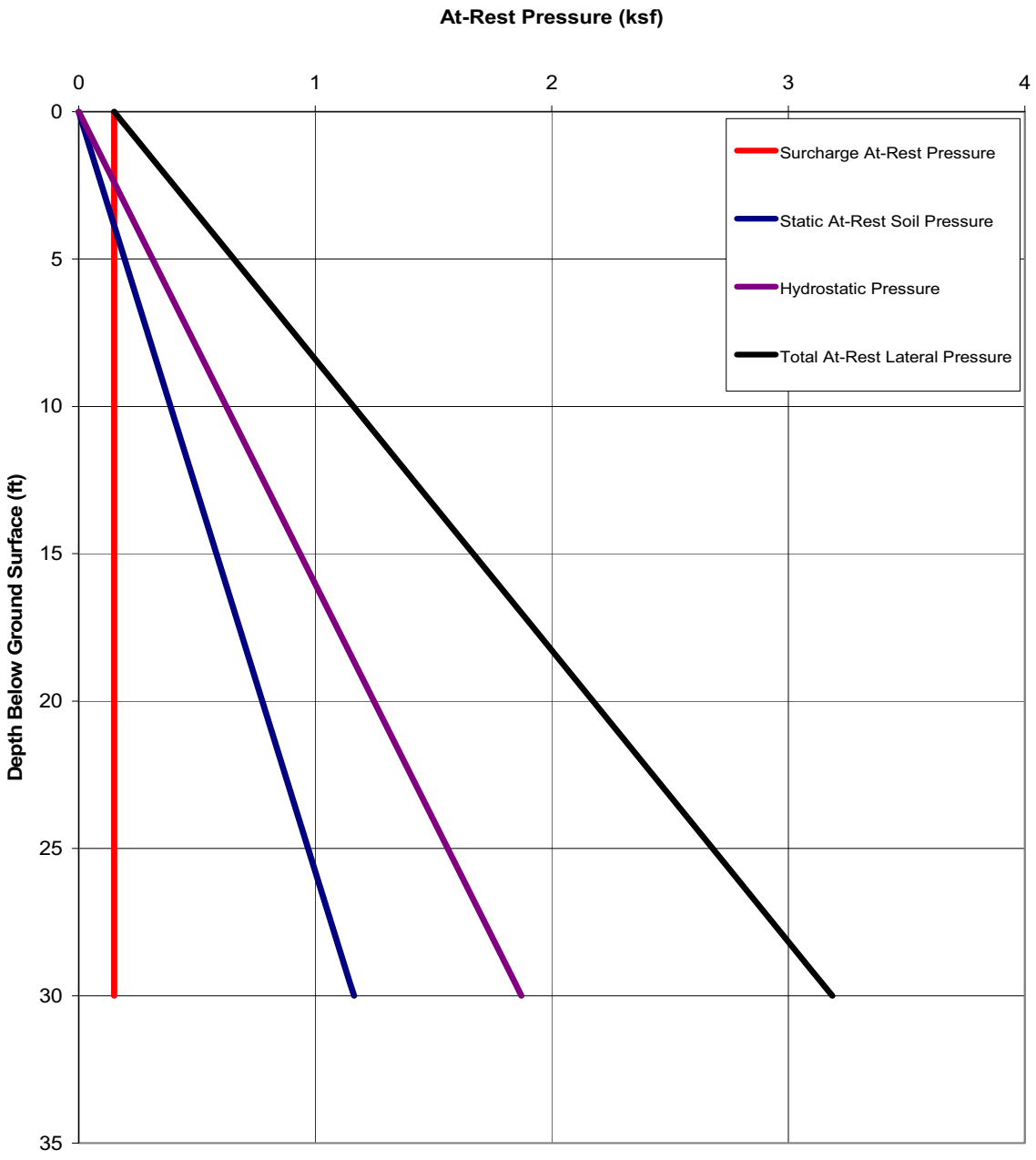

Figure 3H.6-238 At-Rest Lateral Earth Pressure on the UHS Basin Walls

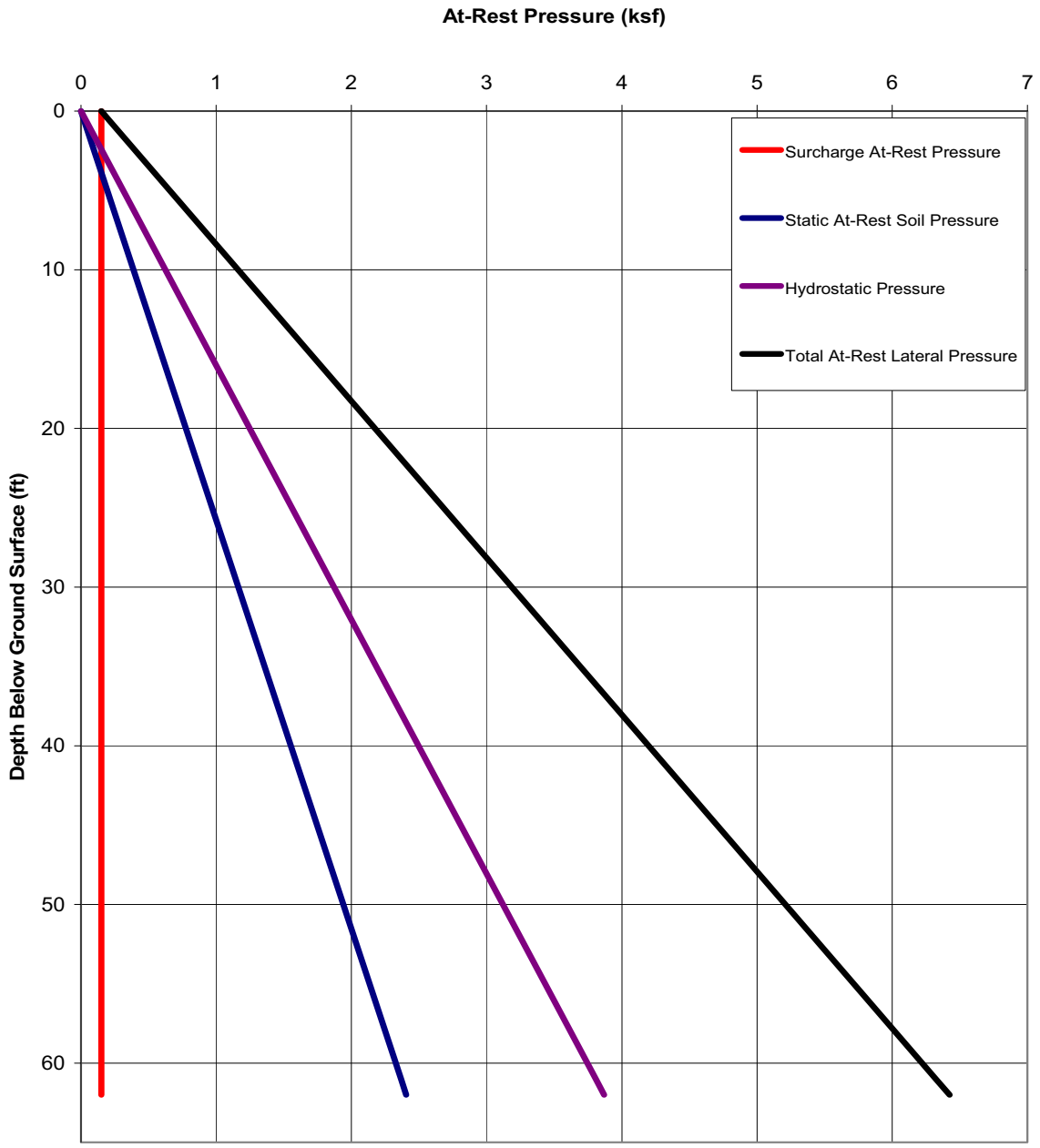

Figure 3H.6-239 At-Rest Lateral Earth Pressure on the North, East and West Walls of the RSW Pump House

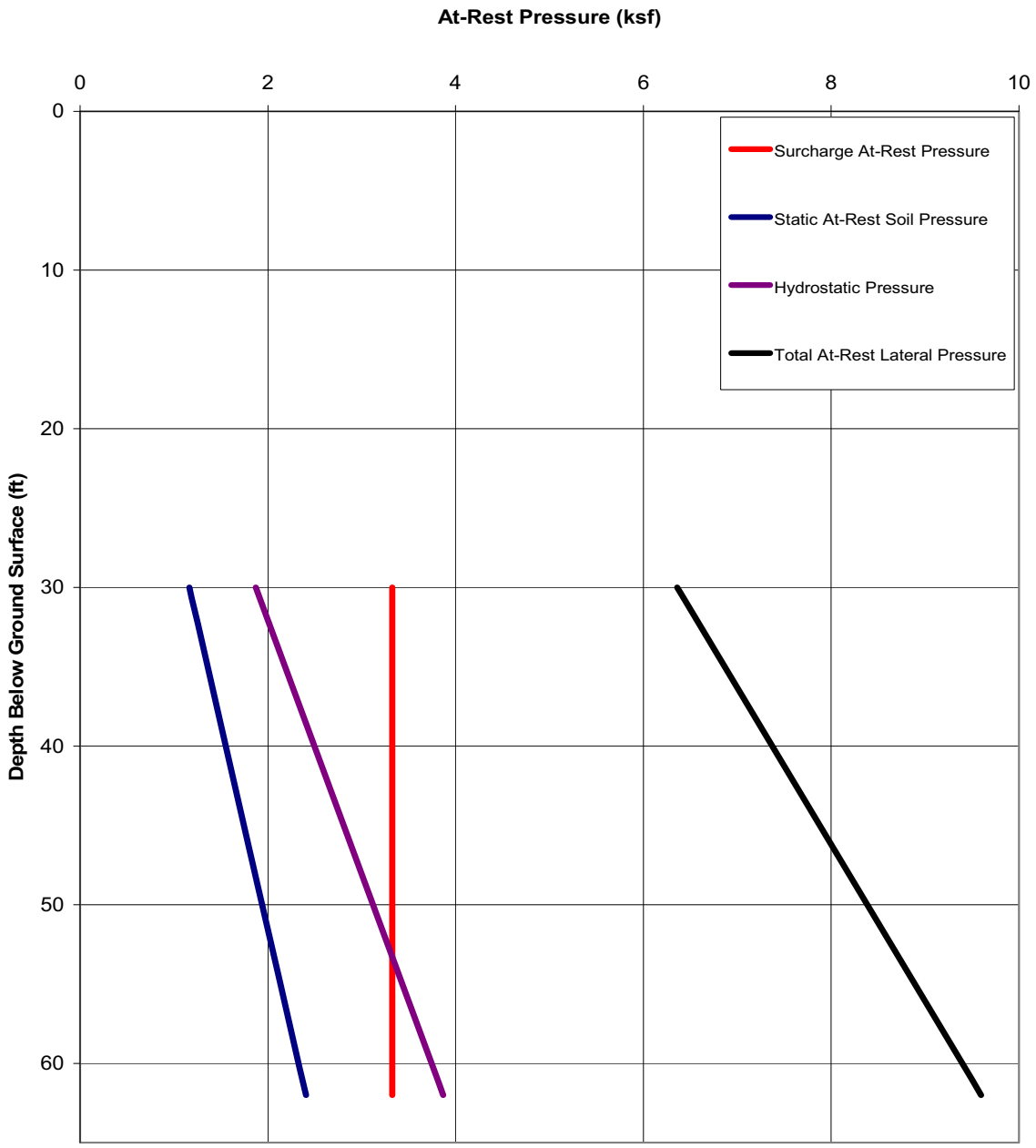

Figure 3H.6-240 At-Rest Lateral Earth Pressure on the South Wall of the RSW Pump House

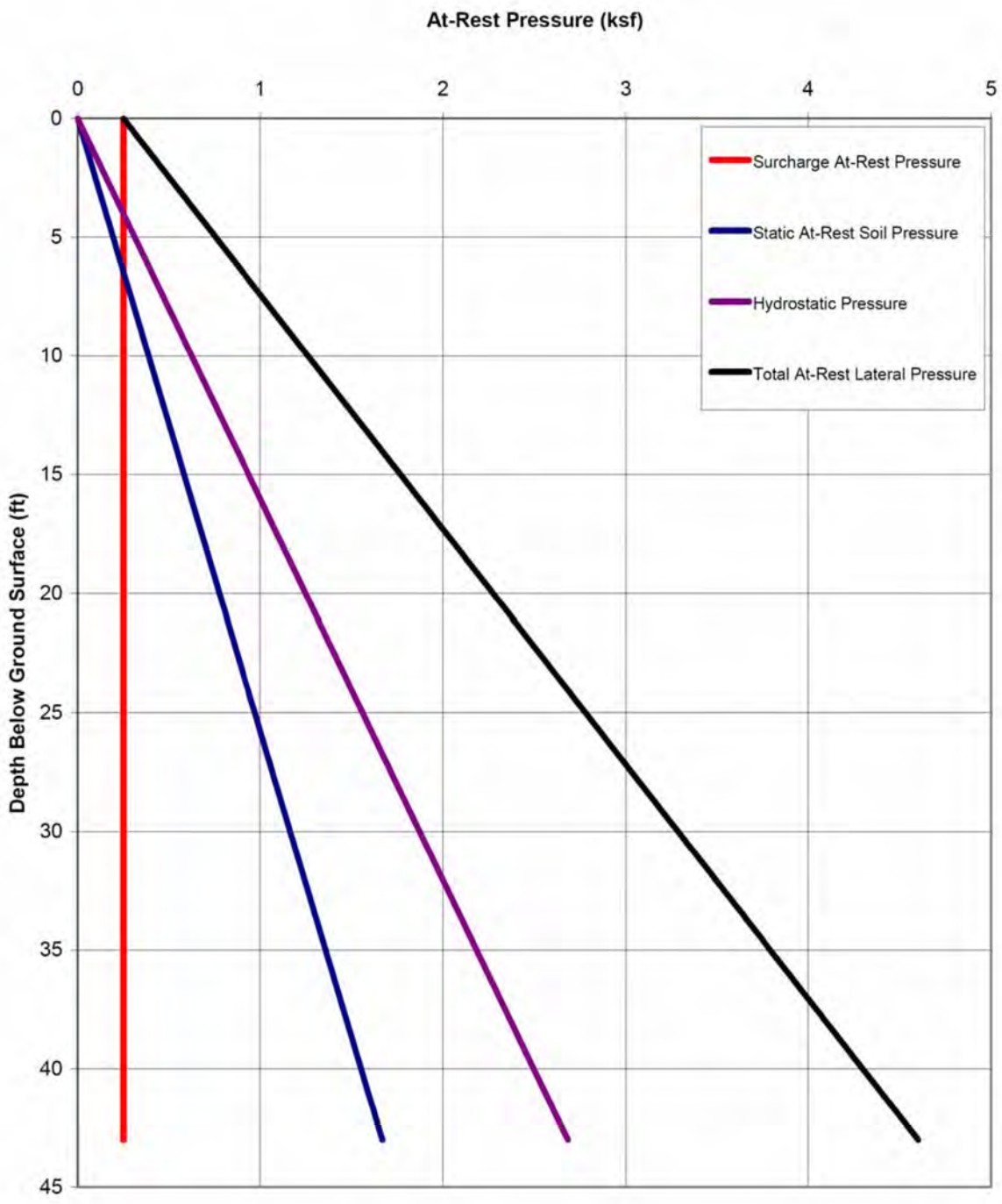

Figure 3H.6-241 At-Rest Lateral Earth Pressure on the Diesel Generator Fuel Oil Storage Vault Walls

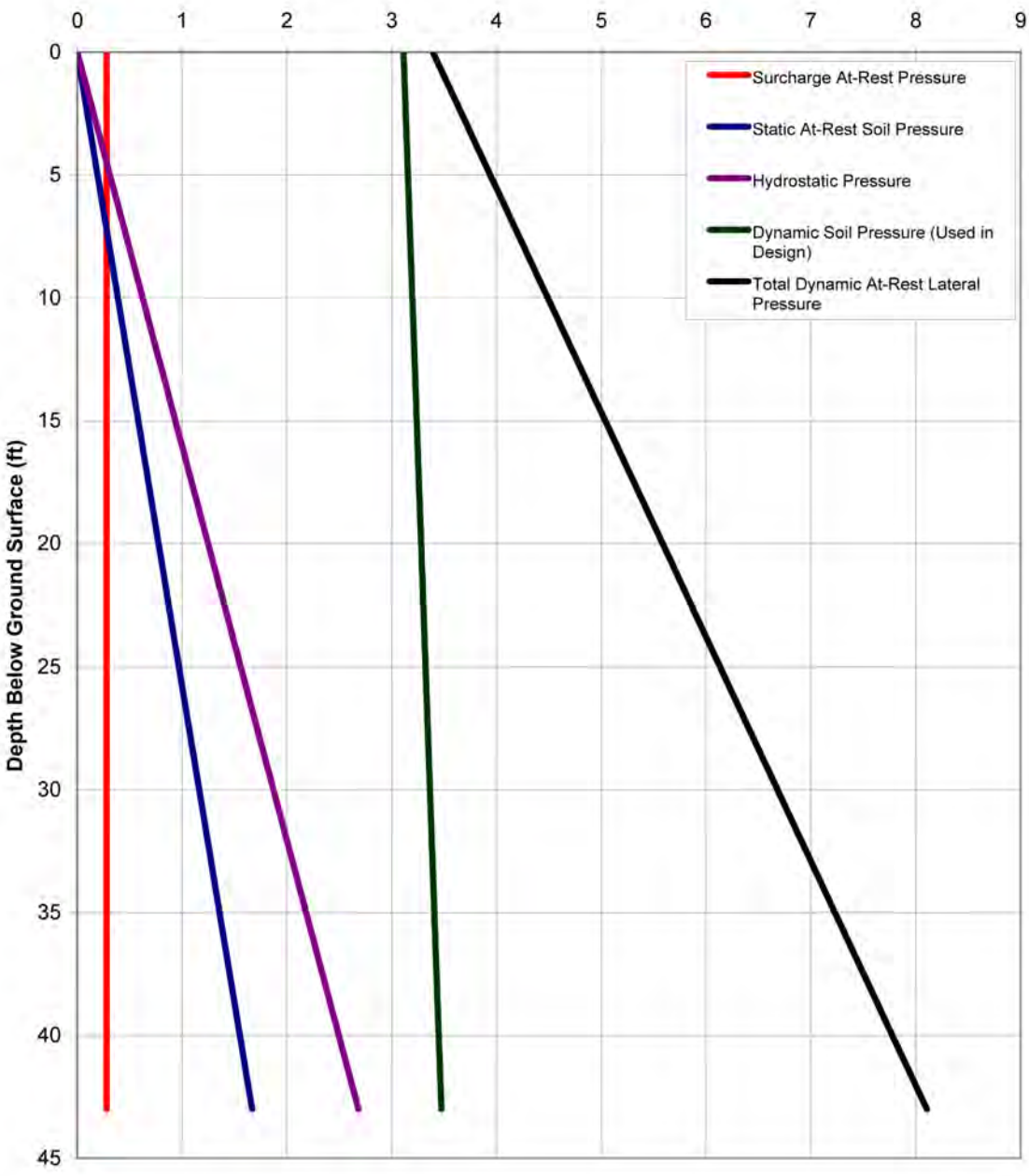

Figure 3H.6-242 Dynamic At-Rest Lateral Earth Pressure on the Diesel Generator Fuel Oil Storage Vault Walls

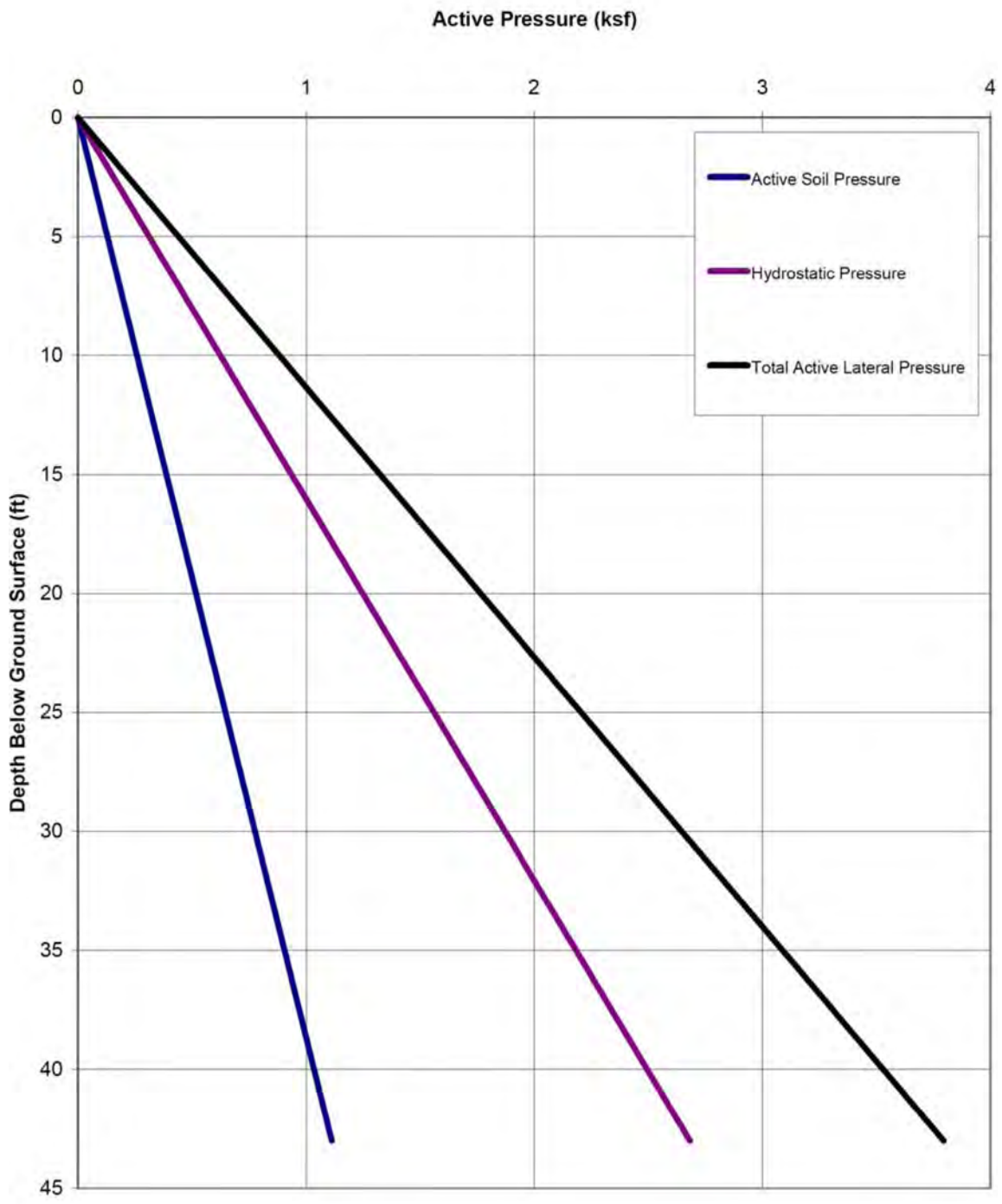

Figure 3H.6-243 Active Lateral Earth Pressure on the Diesel Generator Fuel Oil Storage Vault Walls

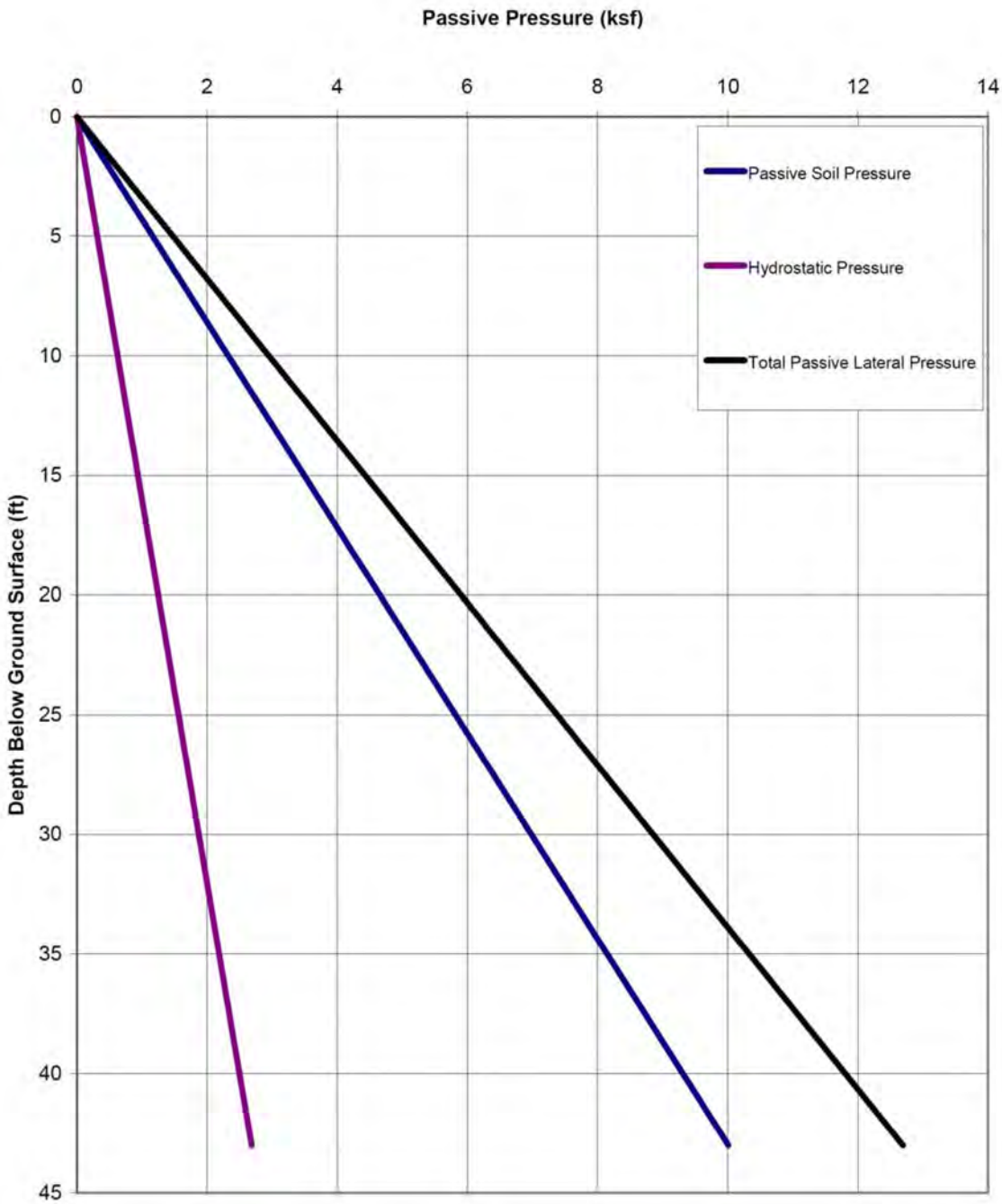

Figure 3H.6-244 Passive Lateral Earth Pressure on the Diesel Generator Fuel Oil Storage Vault Walls

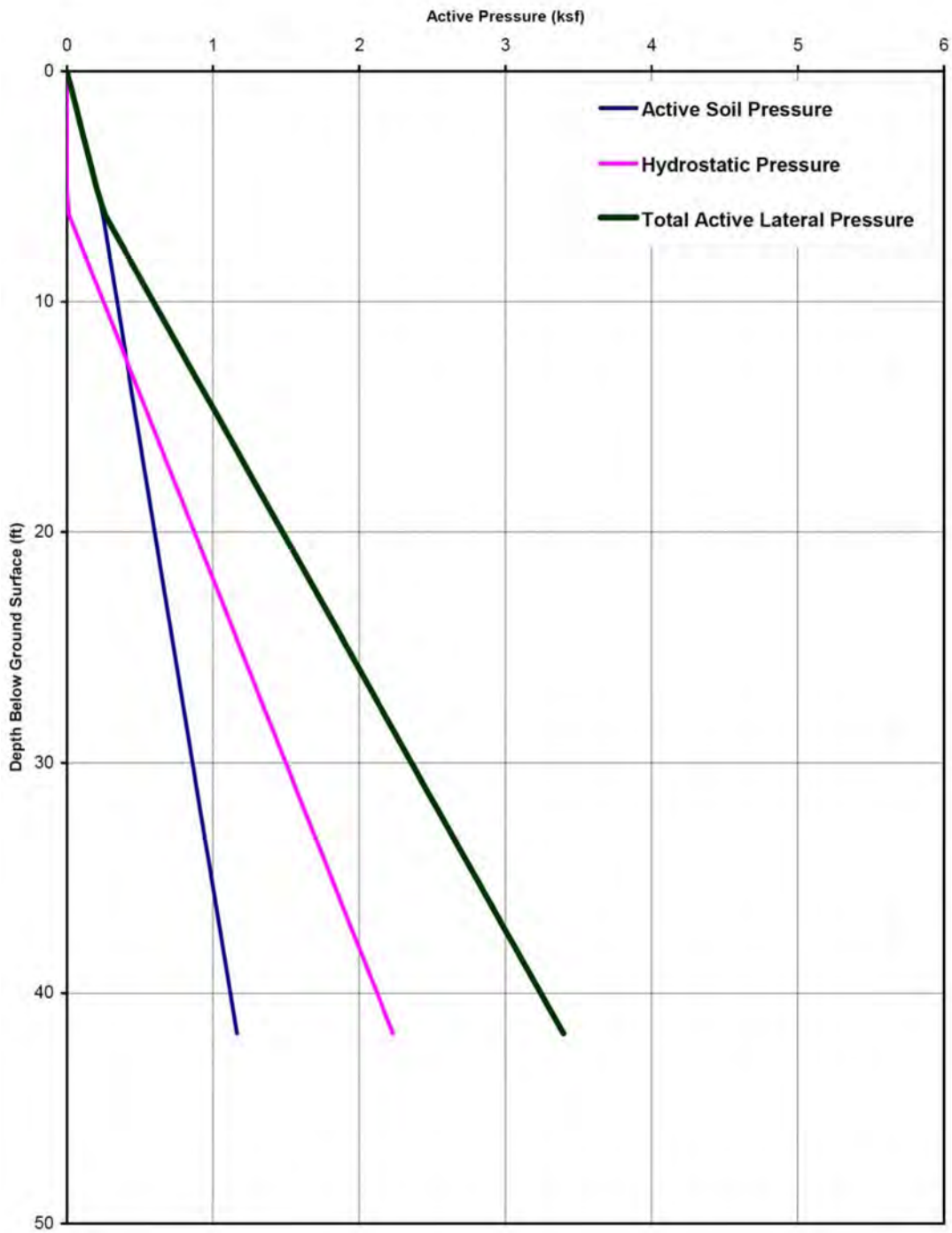

Figure 3H.6-245 Active Lateral Earth Pressure Diagrams for Typical Section of RSW Tunnel

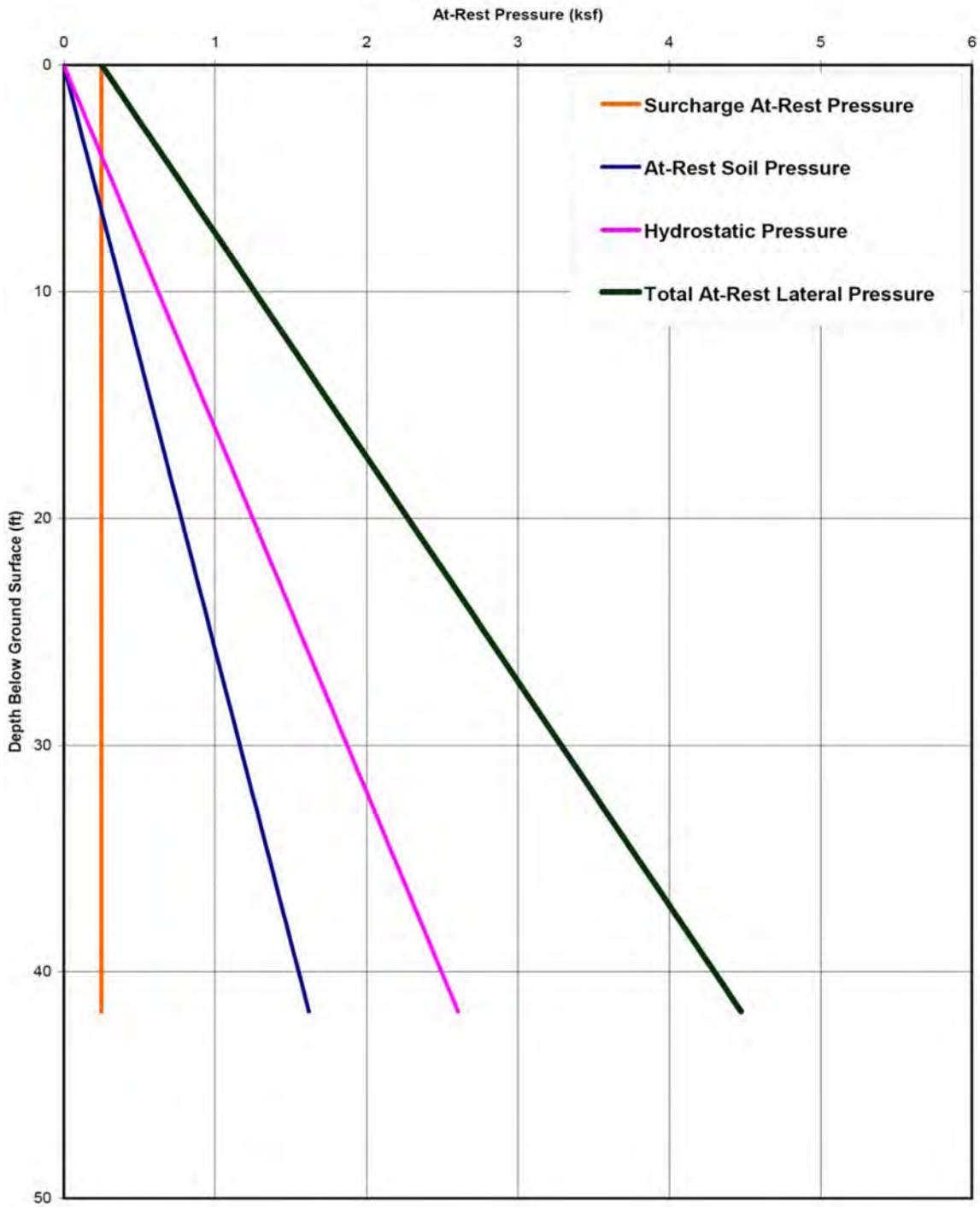

Figure 3H.6-246 At-Rest Lateral Earth Pressure Diagrams for Typical Section of RSW Tunnel

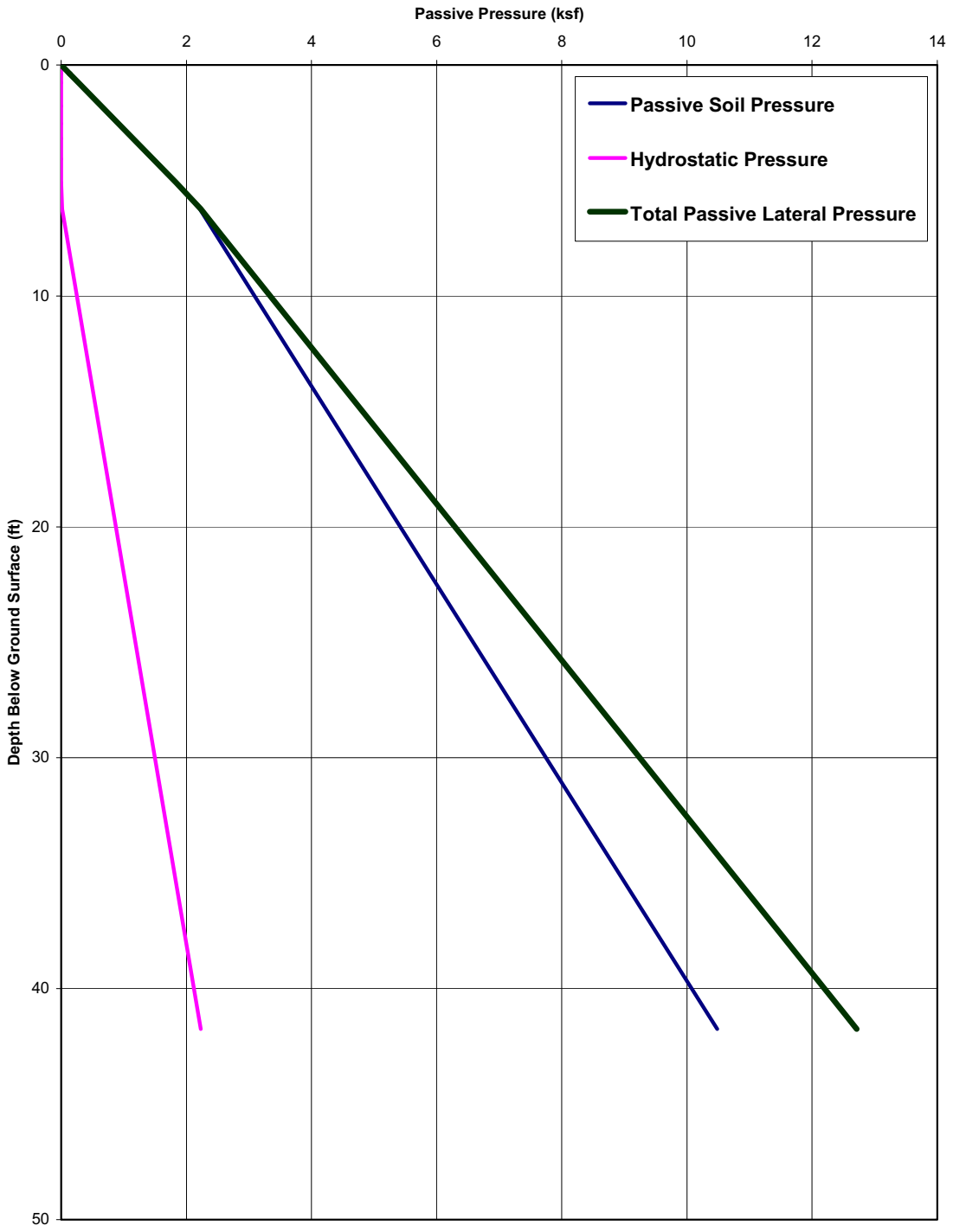

Figure 3H.6-247 Passive Lateral Earth Pressure Diagrams for Typical Section of RSW Tunnel

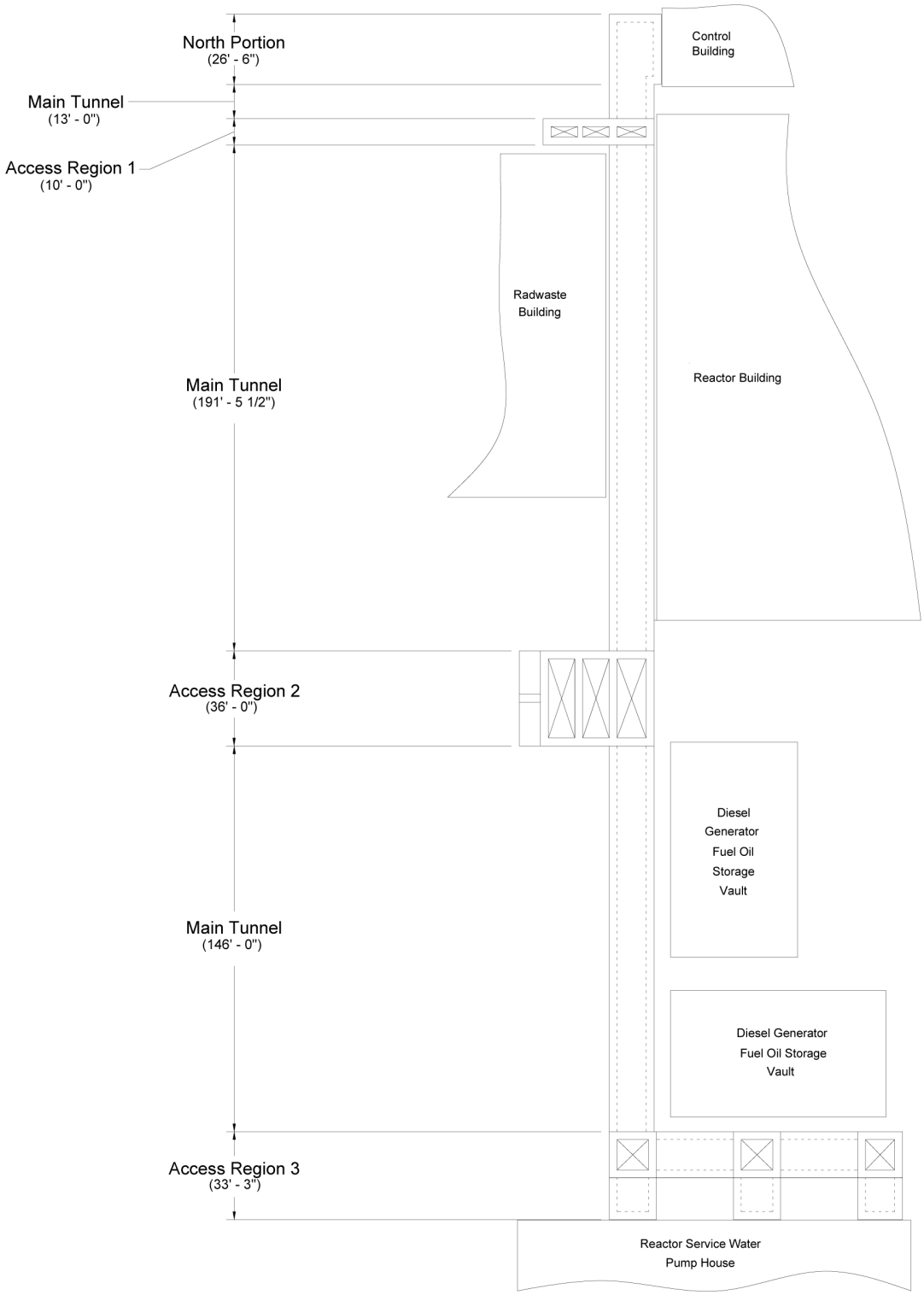

Figure 3H.6-248 RSW Tunnel Plan View

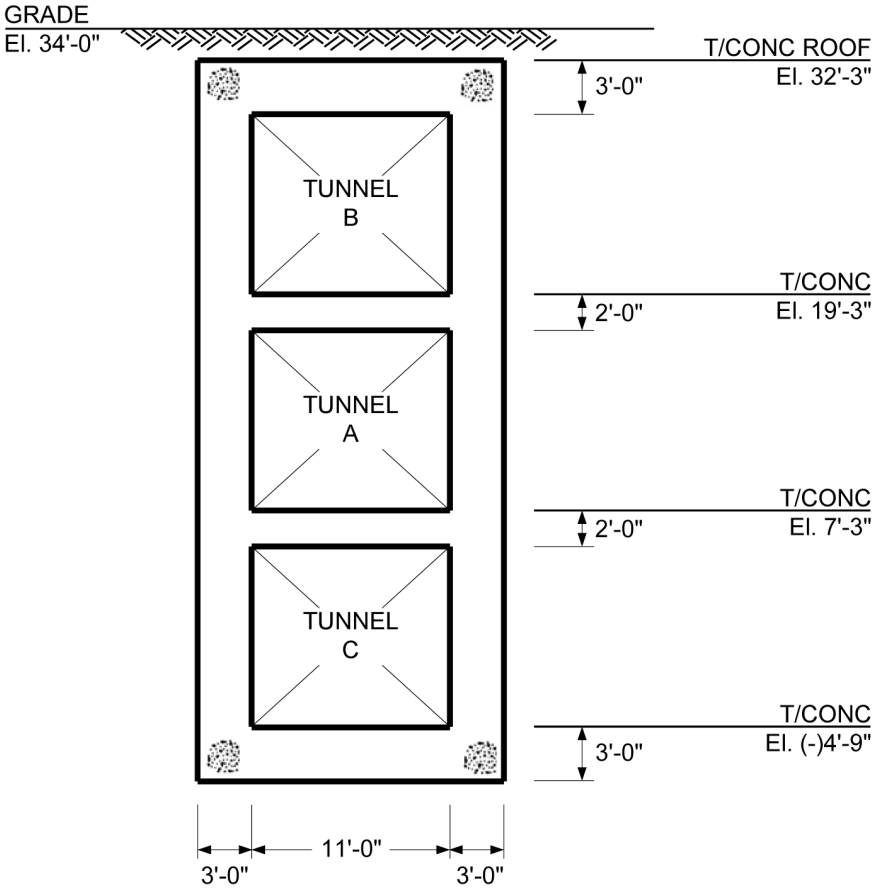

Figure 3H.6-249 Typical RSW Piping Tunnel Section

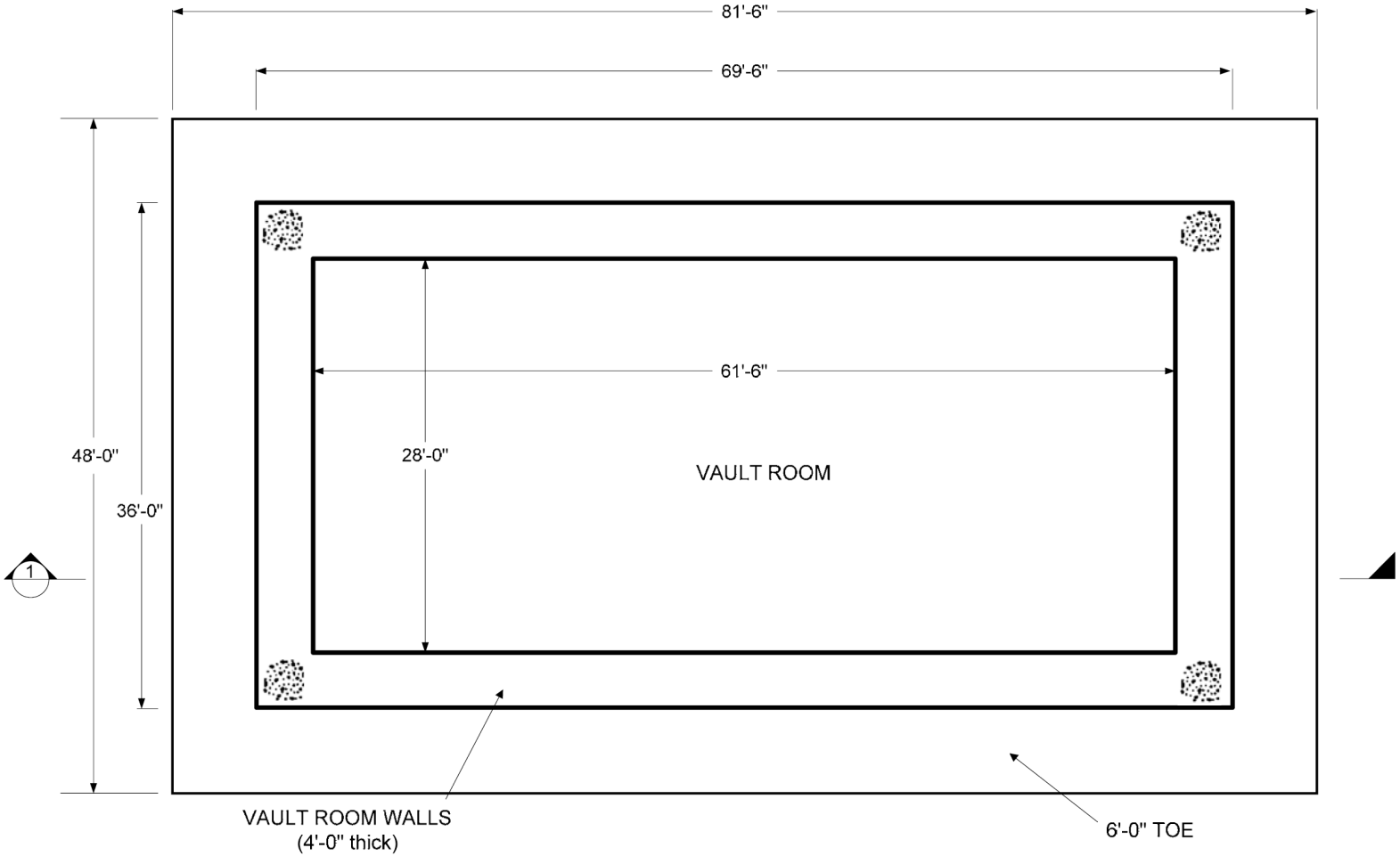

Figure 3H.6-250 Plan View of DGFOSV at Elevation -3'-0"

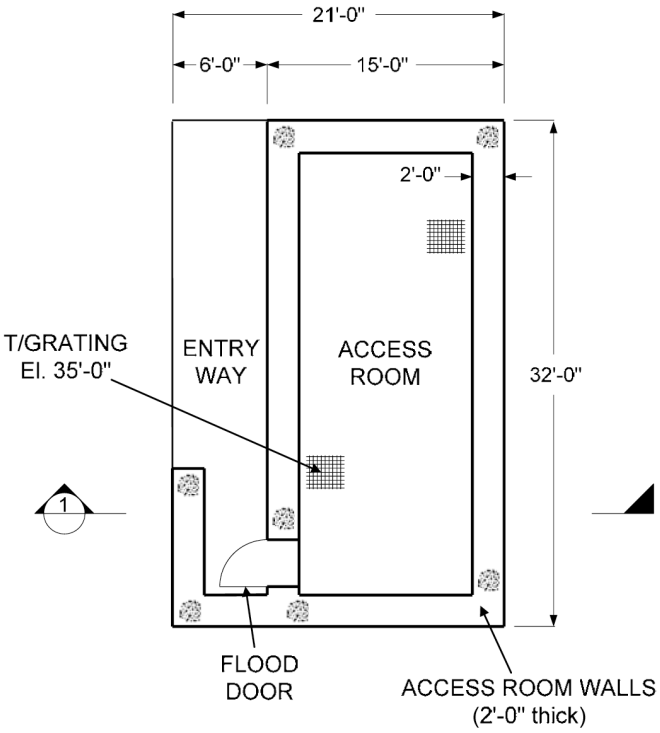

Figure 3H.6-251 Plan View of DGFOSV at Elevation 35'-0"

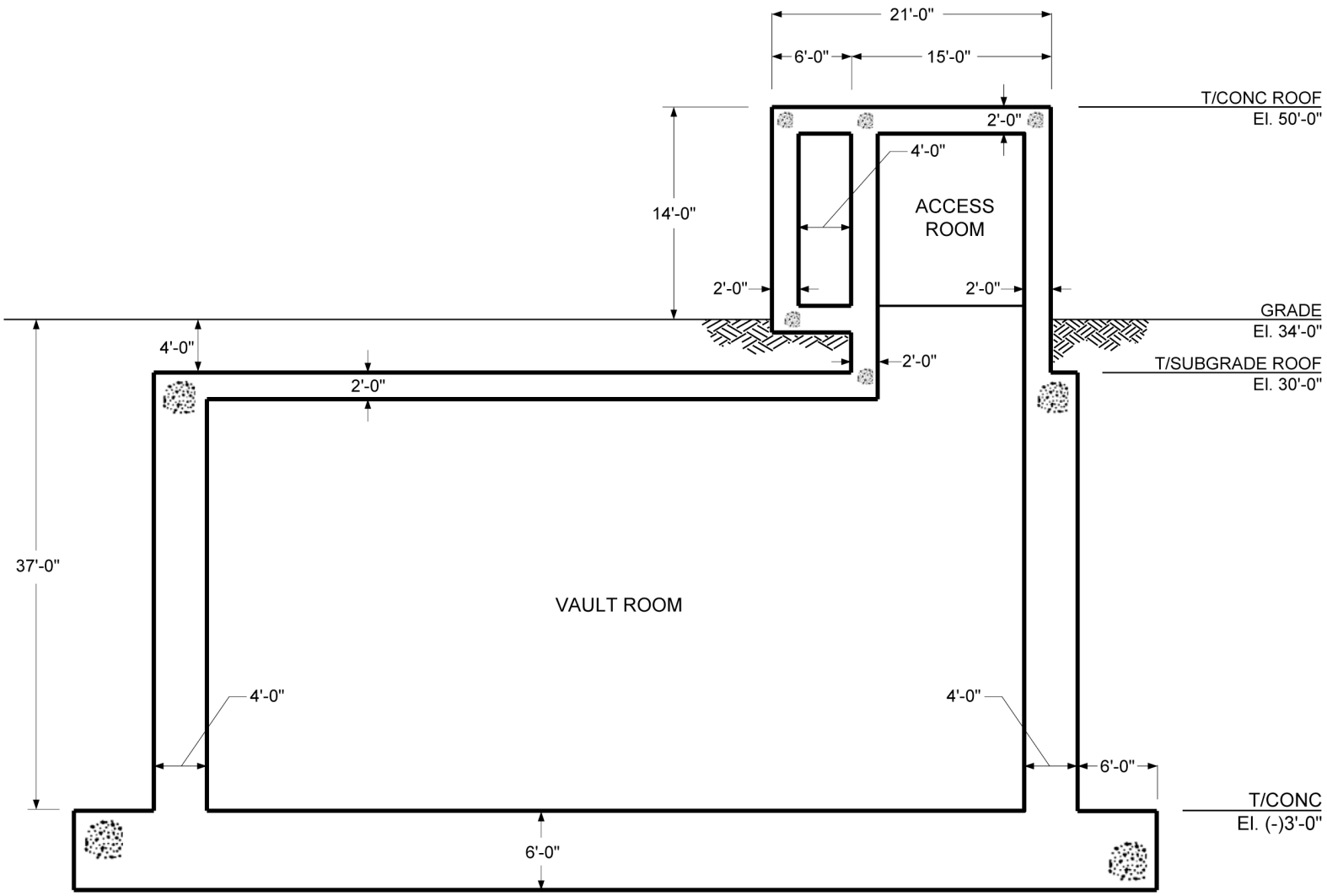

Figure 3H.6-252 DGFOSV Section 1

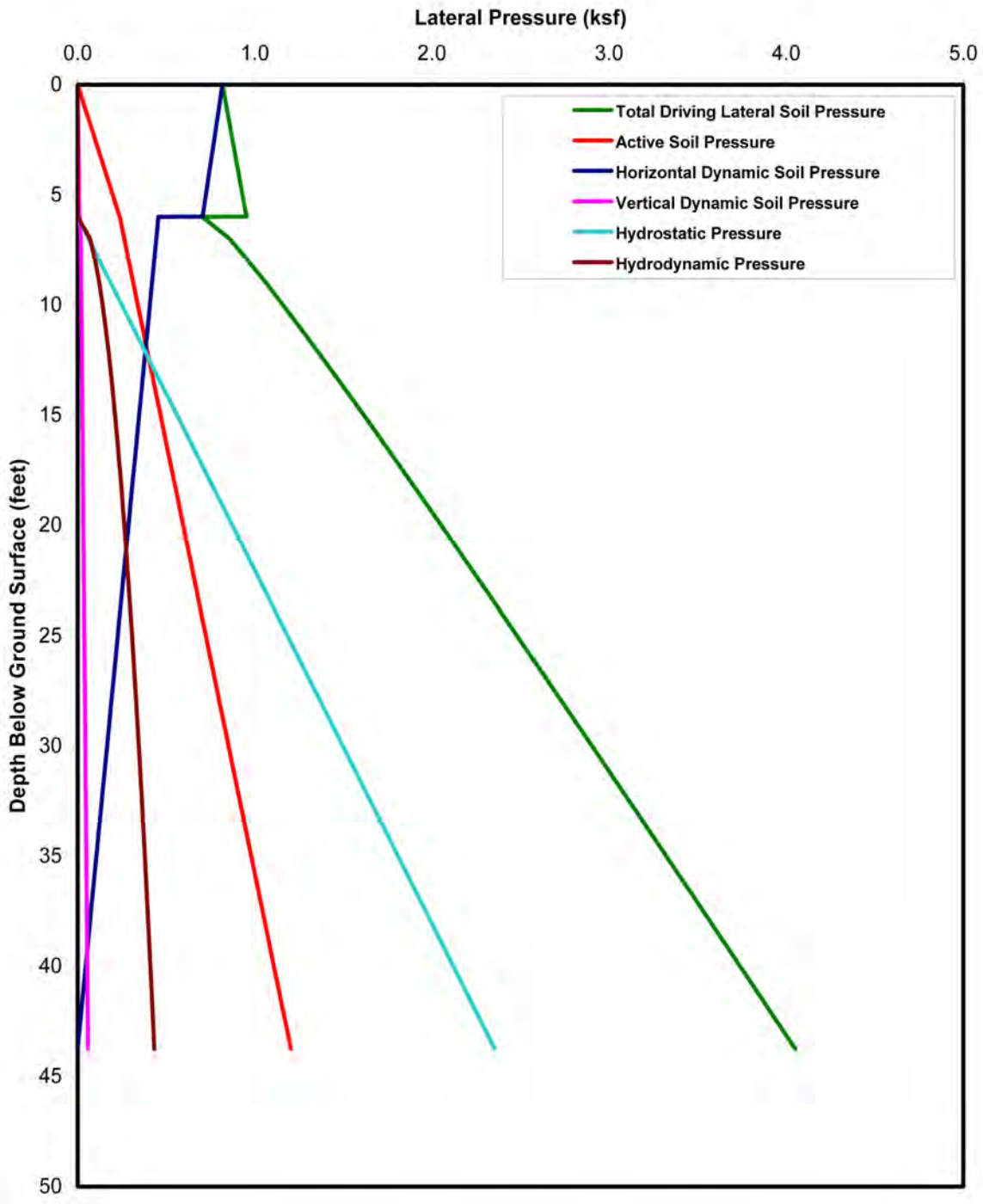

Figure 3H.6-253 Driving Lateral Pressure on the East and West Walls of RSW Tunnel (for Stability Evaluation)

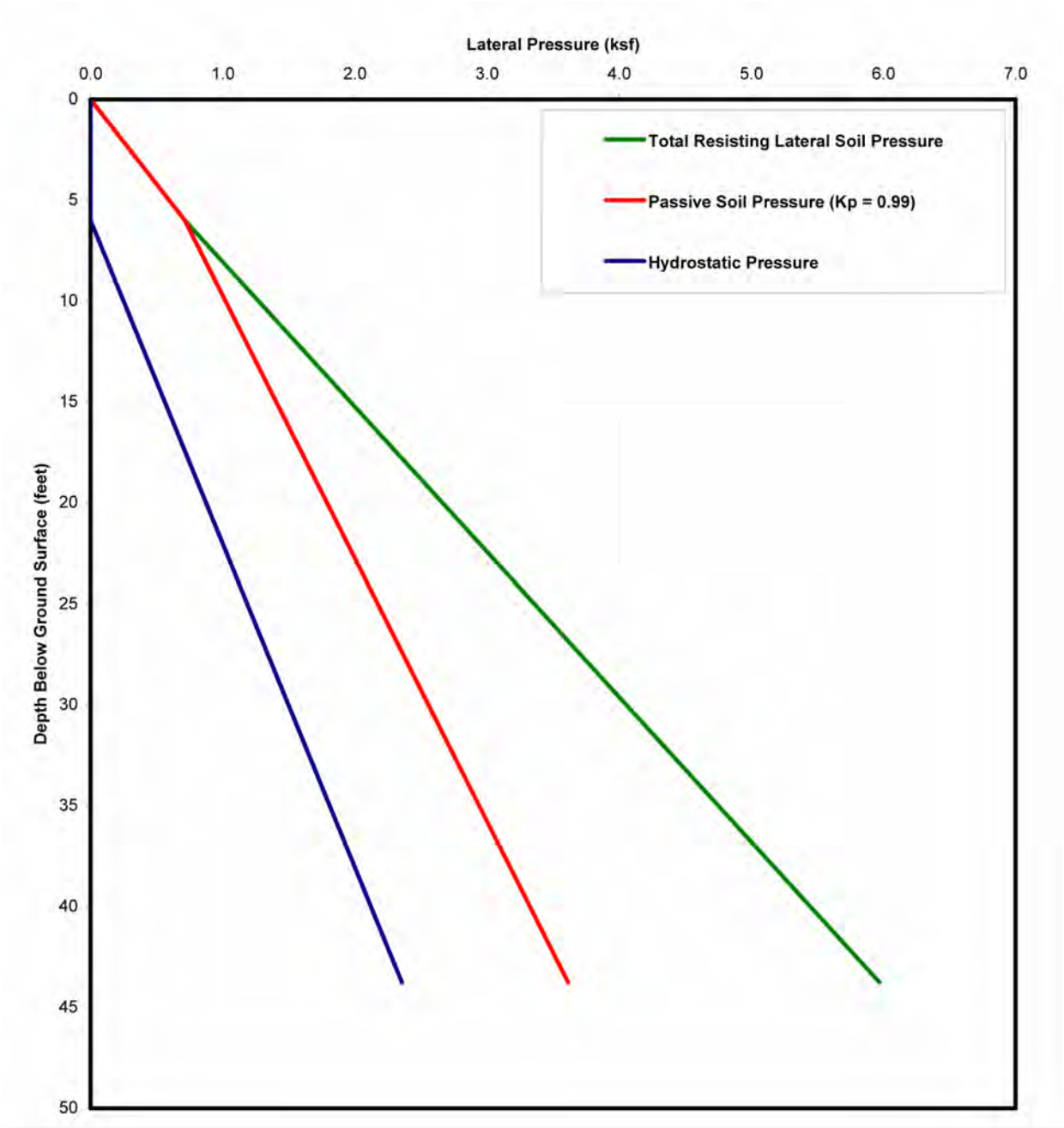

Figure 3H.6-254 Resisting Lateral Pressure on the East and West Walls of RSW Tunnel (for Stability Evaluation)

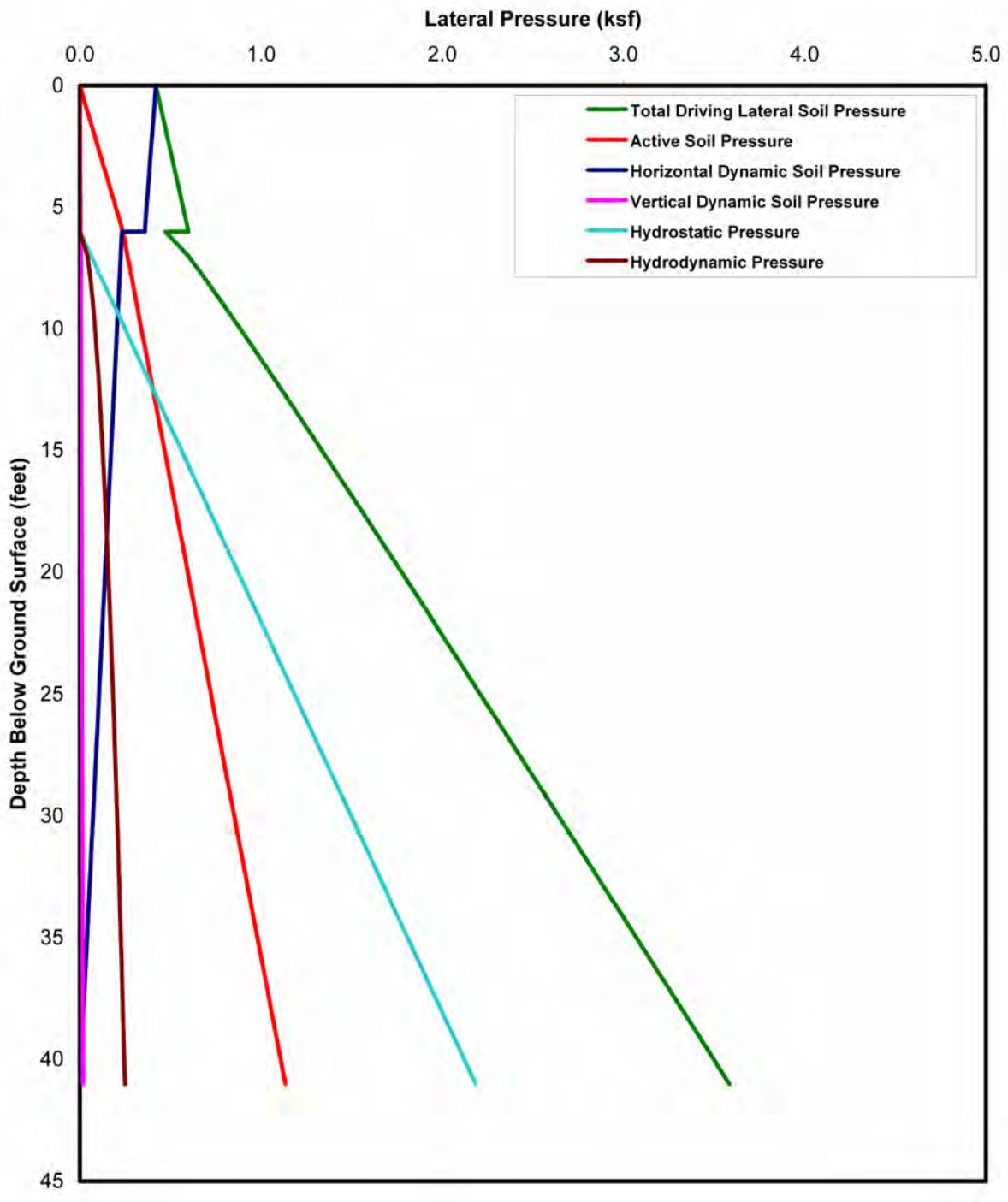

Figure 3H.6-255 Driving Lateral Pressure on the North, East, South, and West Walls of DGFOSV (for Stability Evaluation)

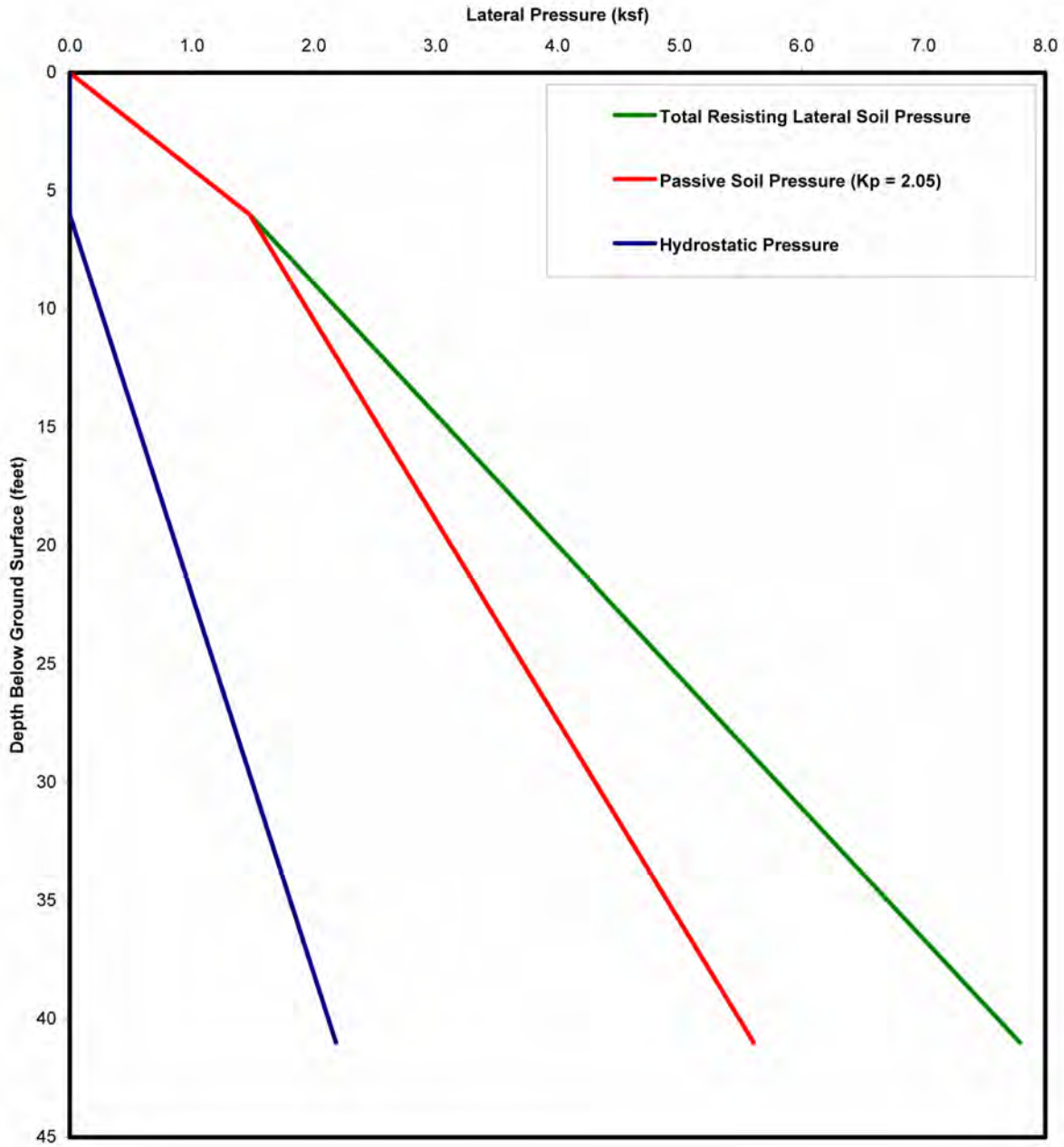

Figure 3H.6-256 Resisting Lateral Pressure on Walls of DGFOSV Perpendicular to Tank (for Stability Evaluation)

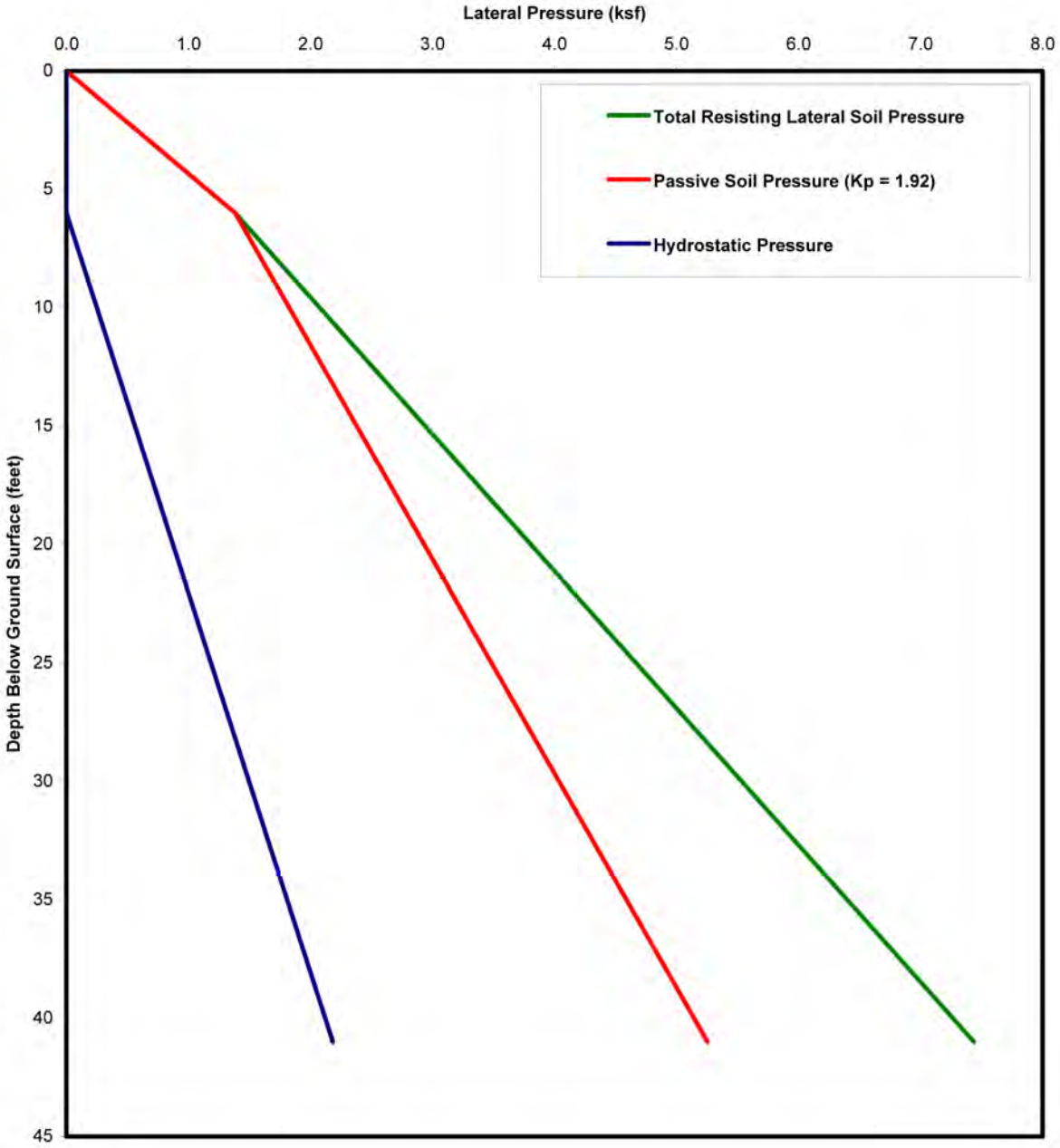

Figure 3H.6-257 Resisting Lateral Pressure on Walls of DGFOSV Parallel to Tank (for Stability Evaluation)

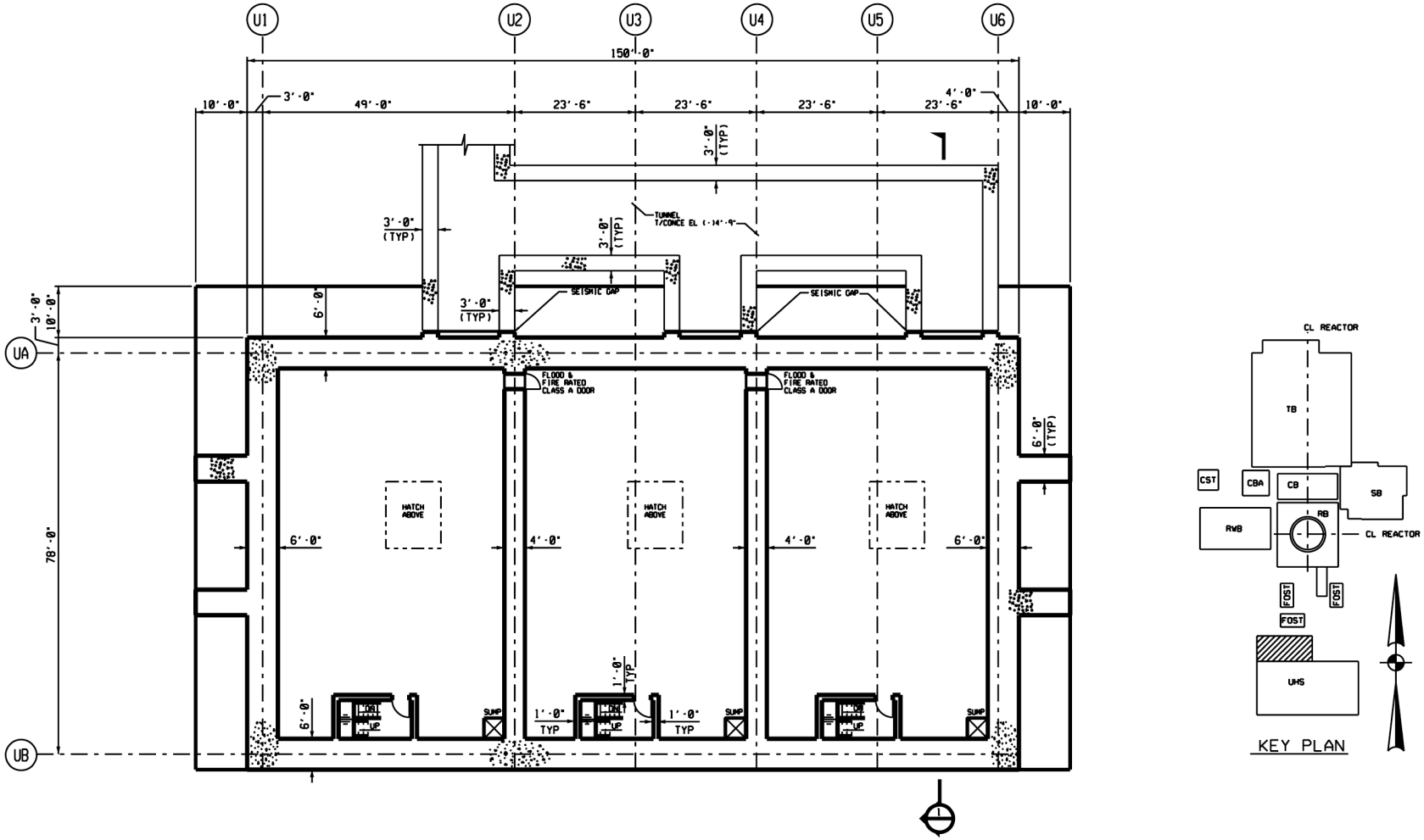

Figure 3H.6-258 RSW Pump House Floor Plan at Elevation -18'-0"

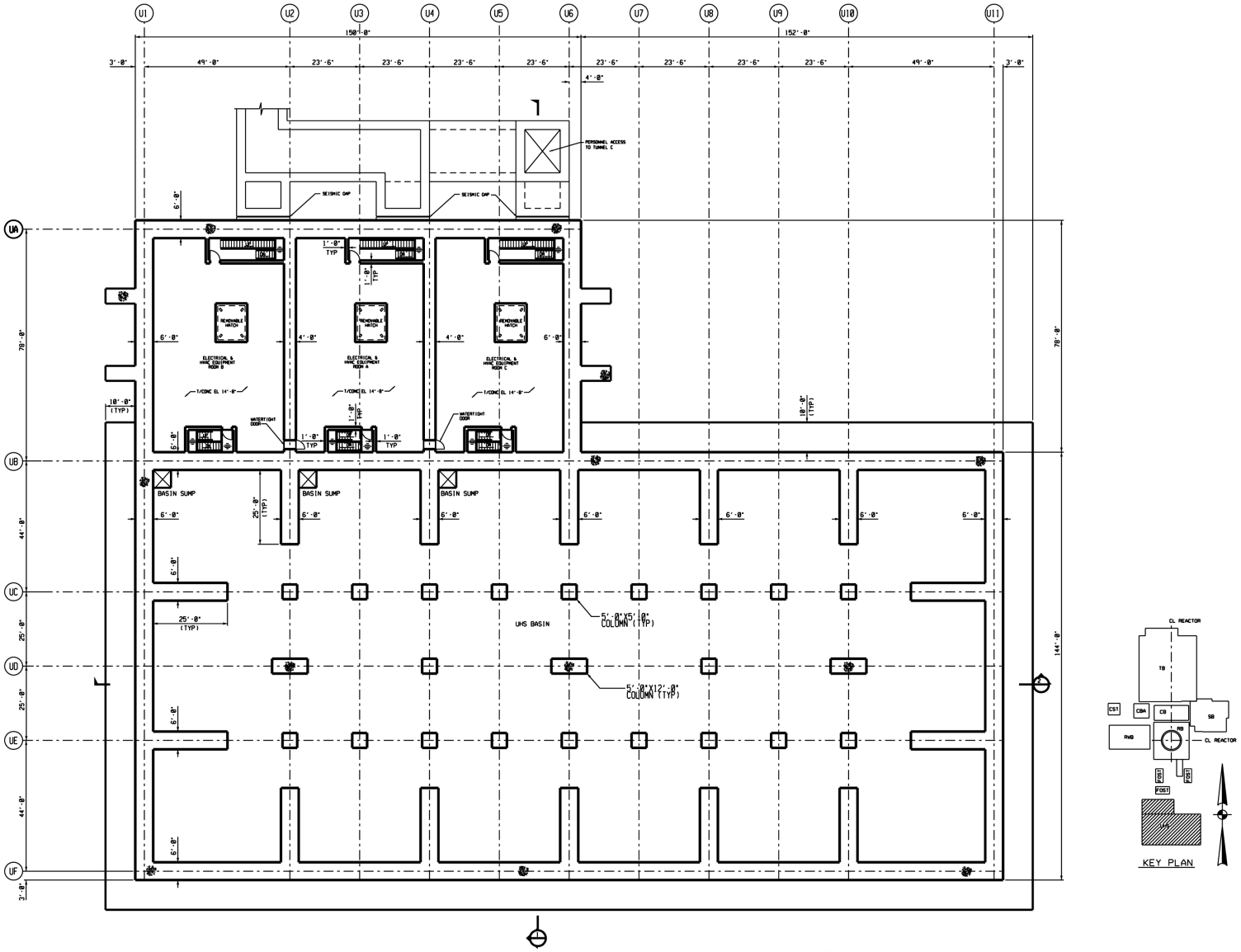

Figure 3H.6-259 UHS Basin Plan at Elevation 14'-0"

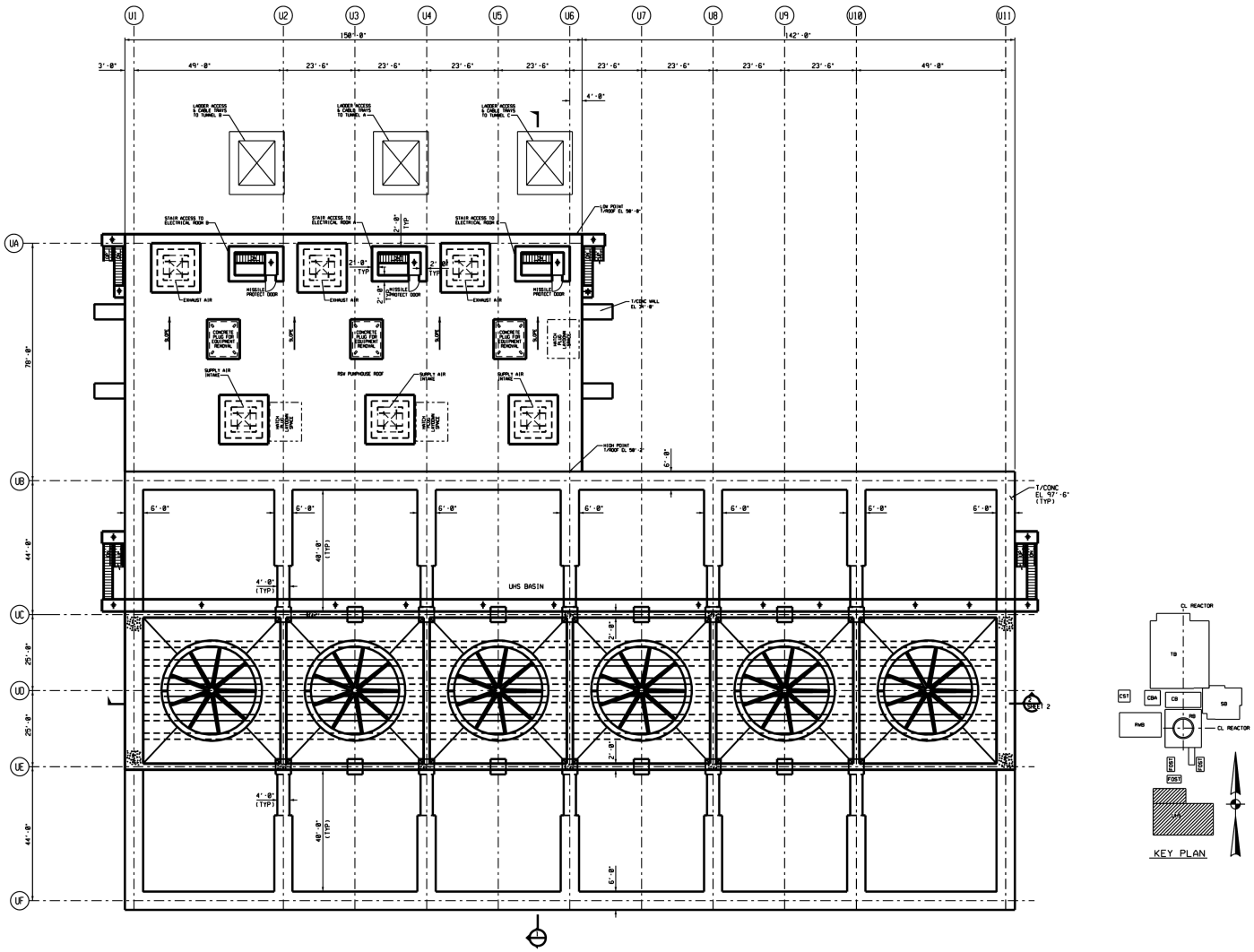

Figure 3H.6-260 UHS Tower Upper Level

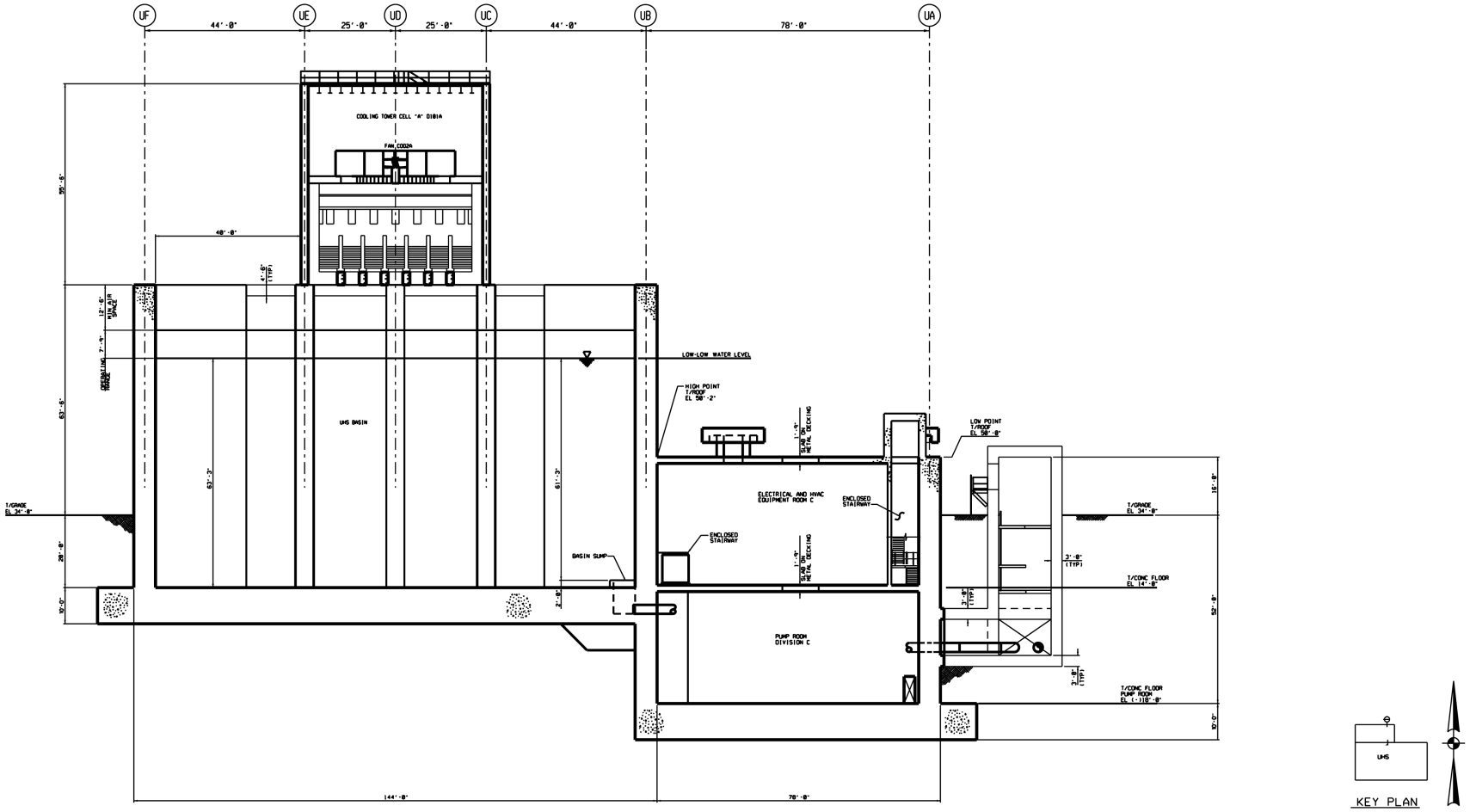

Figure 3H.6-261 UHS/RSW Pump House, Section 1

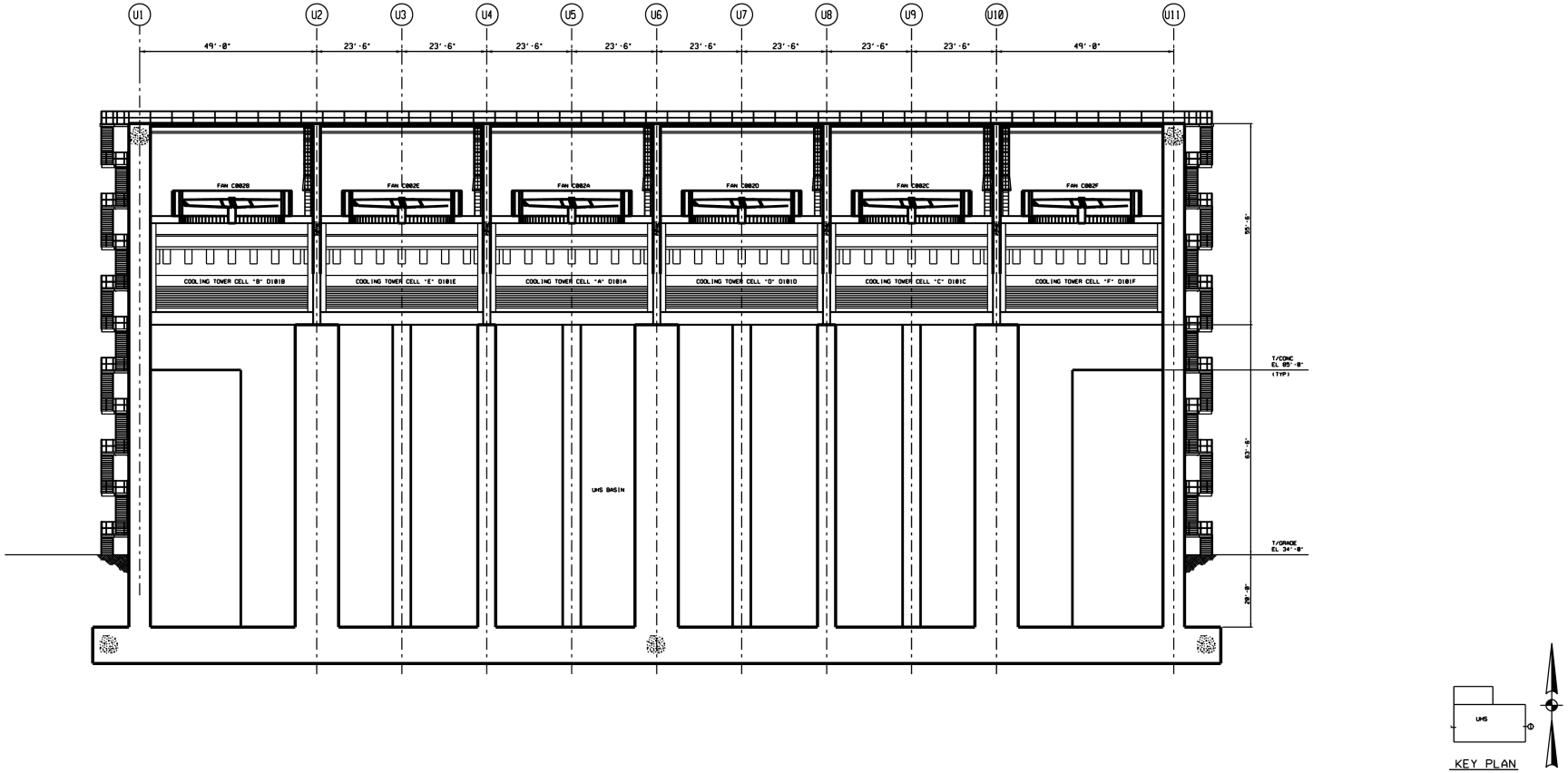

Figure 3H.6-262 UHS Section 2

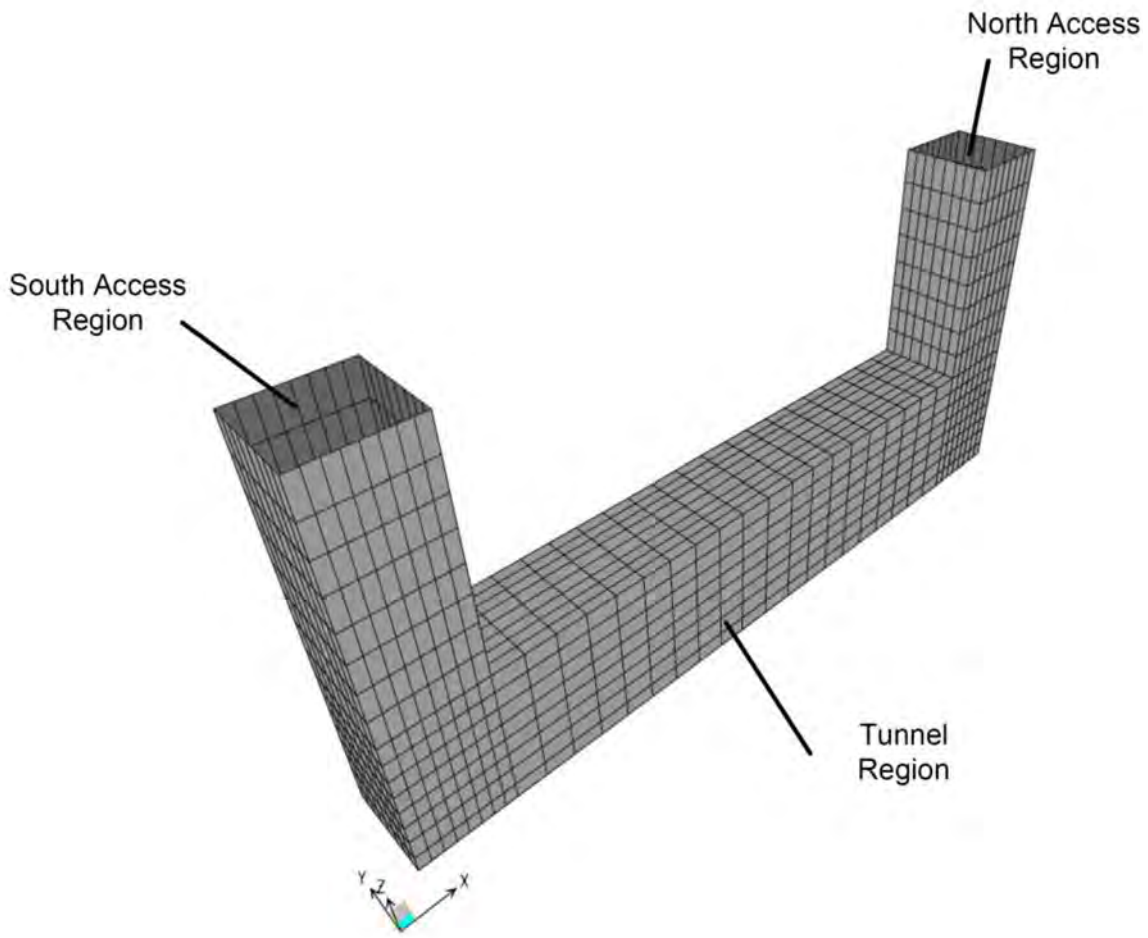

Figure 3H.7-1 SAP2000 Finite Element Analysis Model for DGFOT

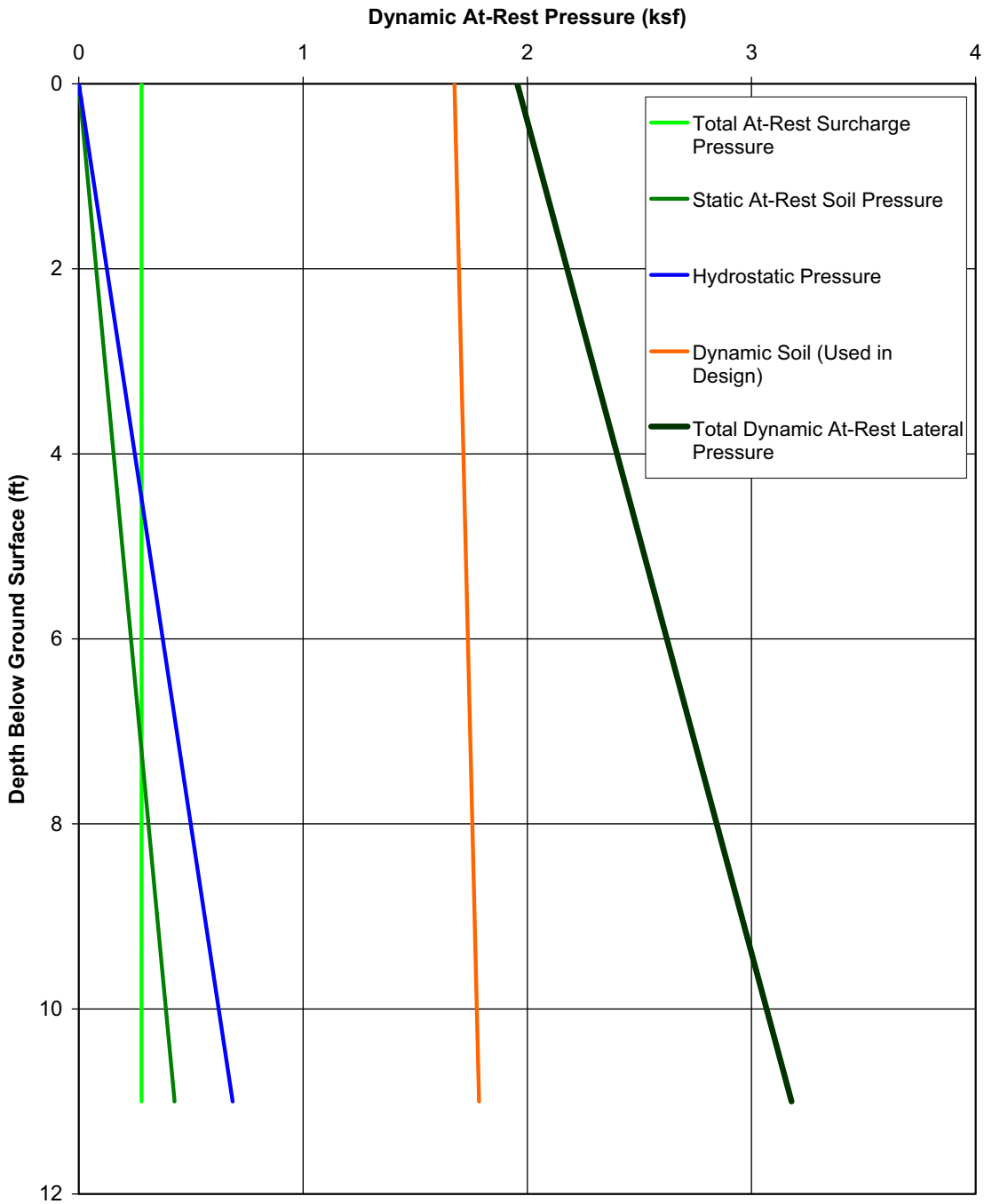

Figure 3H.7-2 Dynamic At-Rest Lateral Earth Pressure (psf) on the Walls of the Fuel Oil Tunnel DGFOT Walls

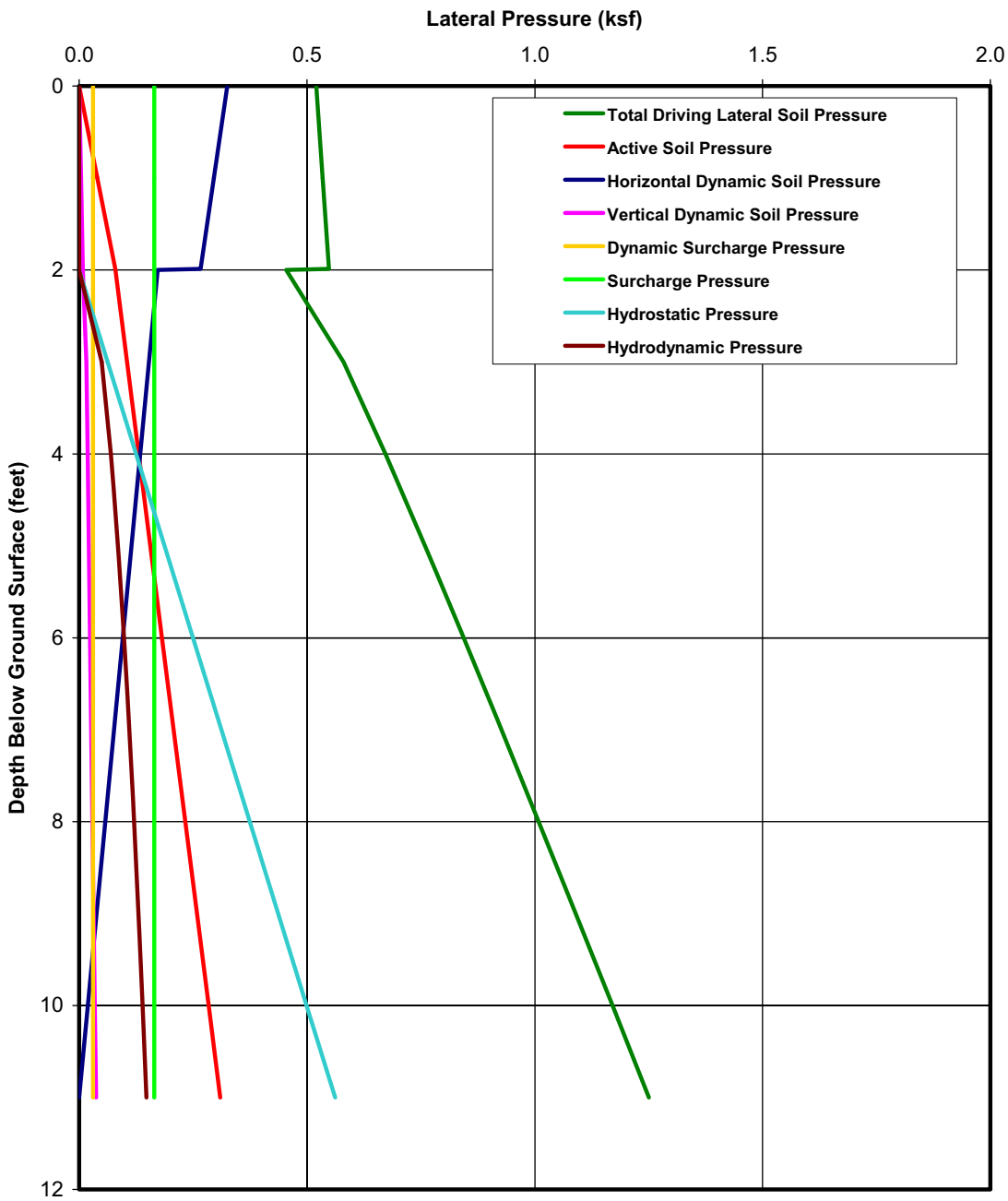

Figure 3H.7-3 Driving Lateral Earth Pressure (ksf) on the Walls of the Fuel Oil Tunnel (for Stability Evaluation)

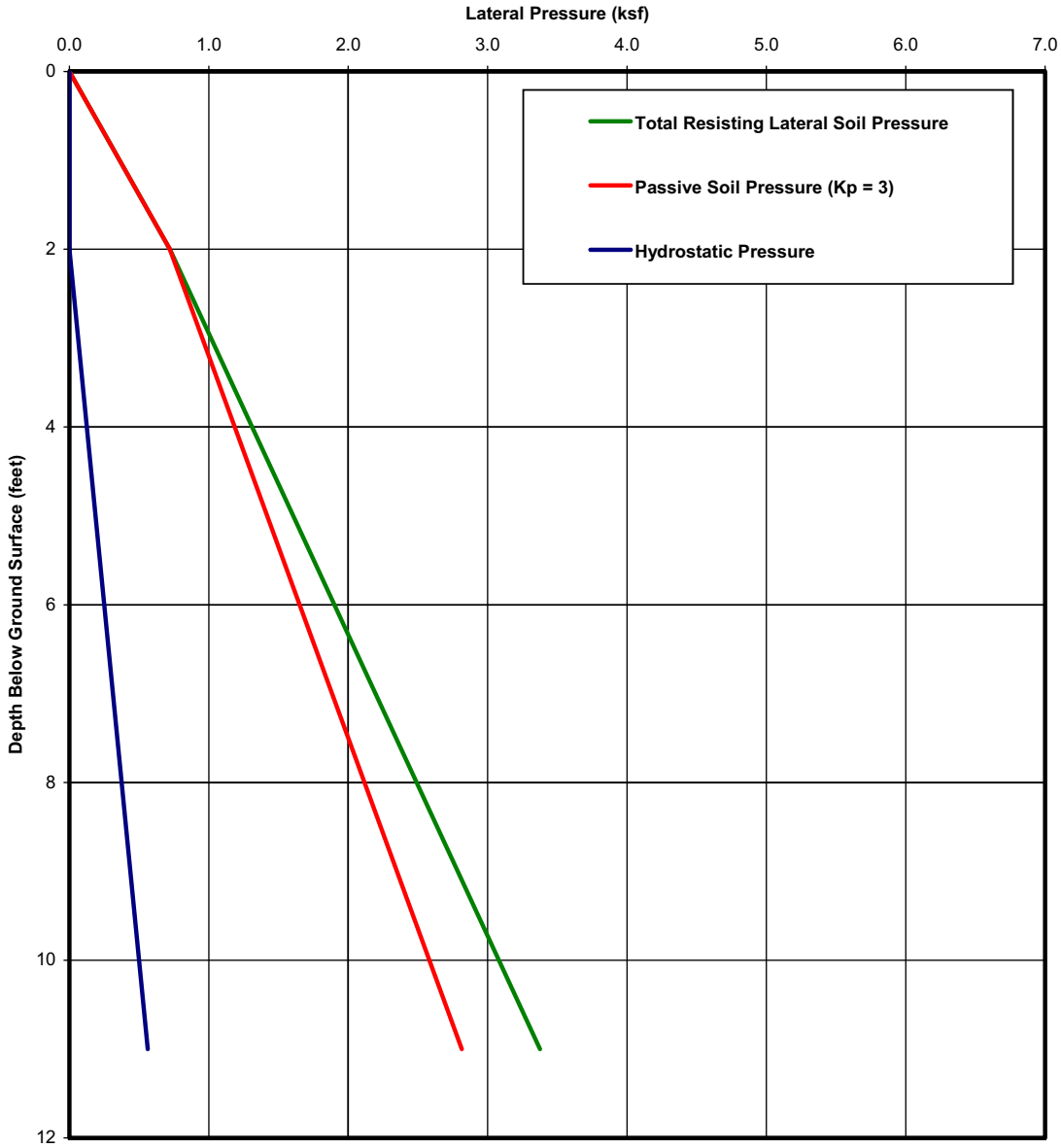

Figure 3H.7-4 Resisting Lateral Earth Pressure (ksf) on the Walls of the Fuel Oil Tunnel (for Stability Evaluation)

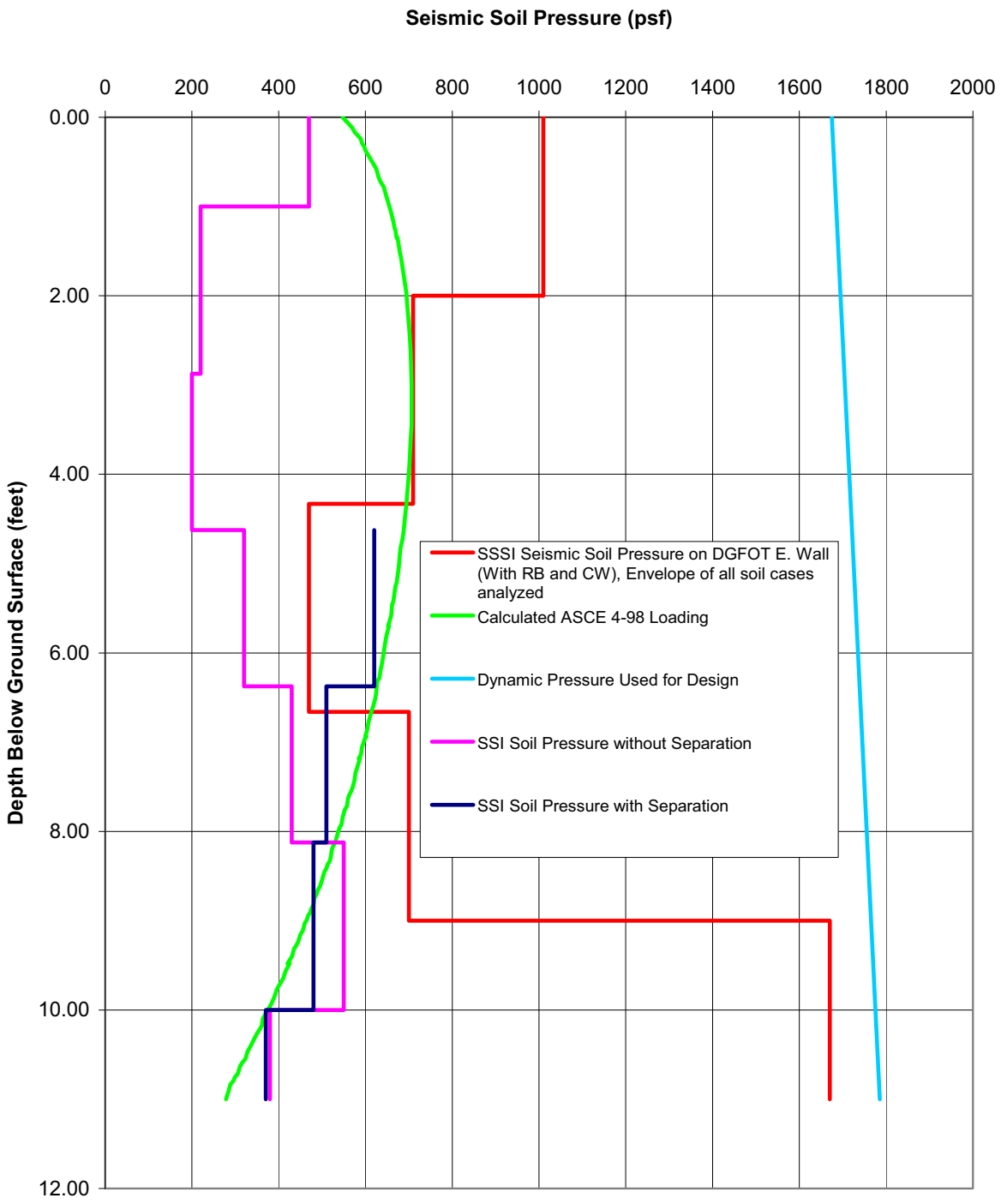

Figure 3H.7-5 SSI, SSSI, ASCE 4-98 and Design Lateral Seismic Soil Pressures (psf) on Fuel Oil Tunnel East Wall with Reactor Building and Crane Wall

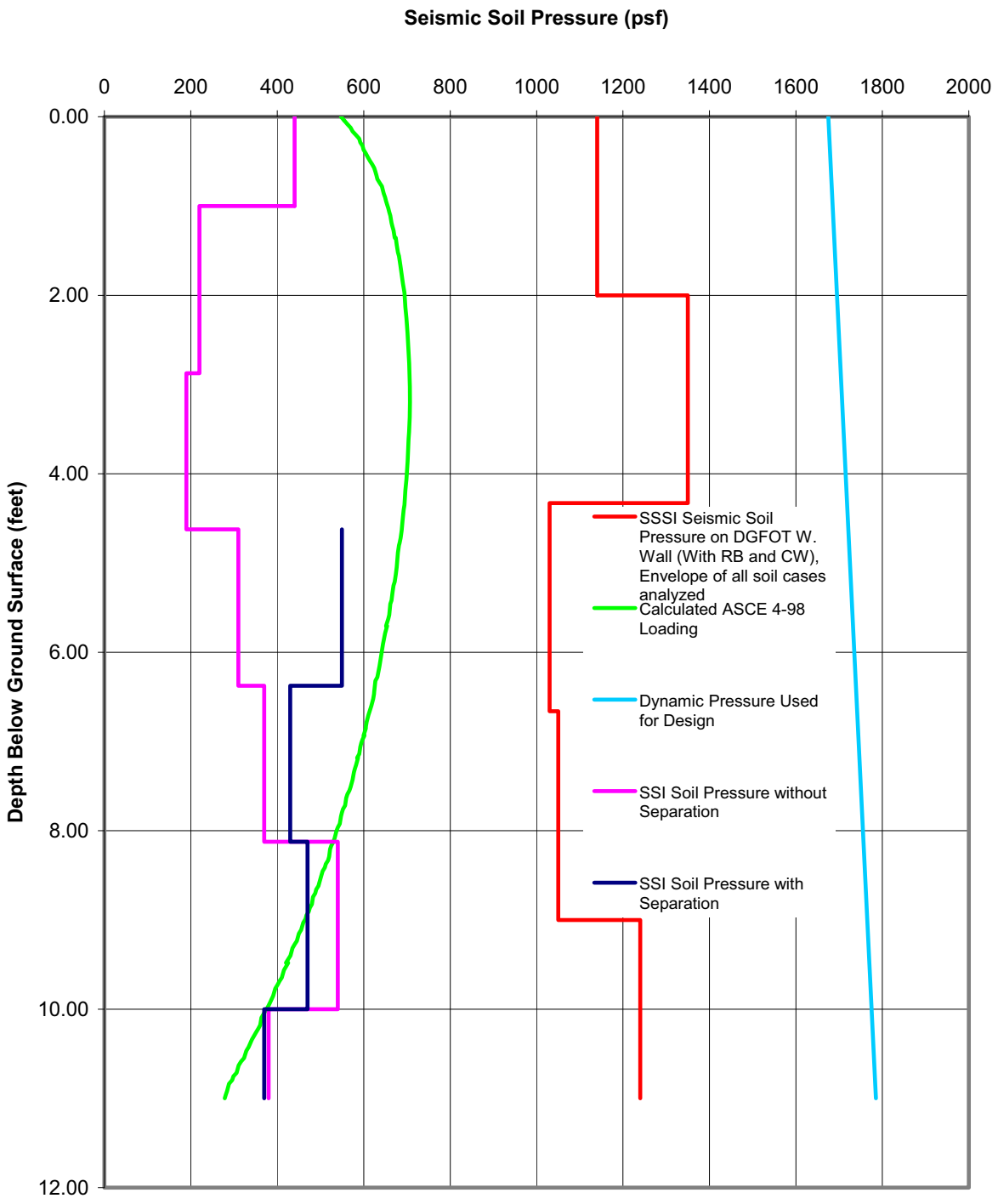

Figure 3H.7-6 SSI, SSSI, ASCE 4-98 and Design Lateral Seismic Soil Pressures (psf) on Fuel Oil Tunnel West Wall with Reactor Building and Crane Wall

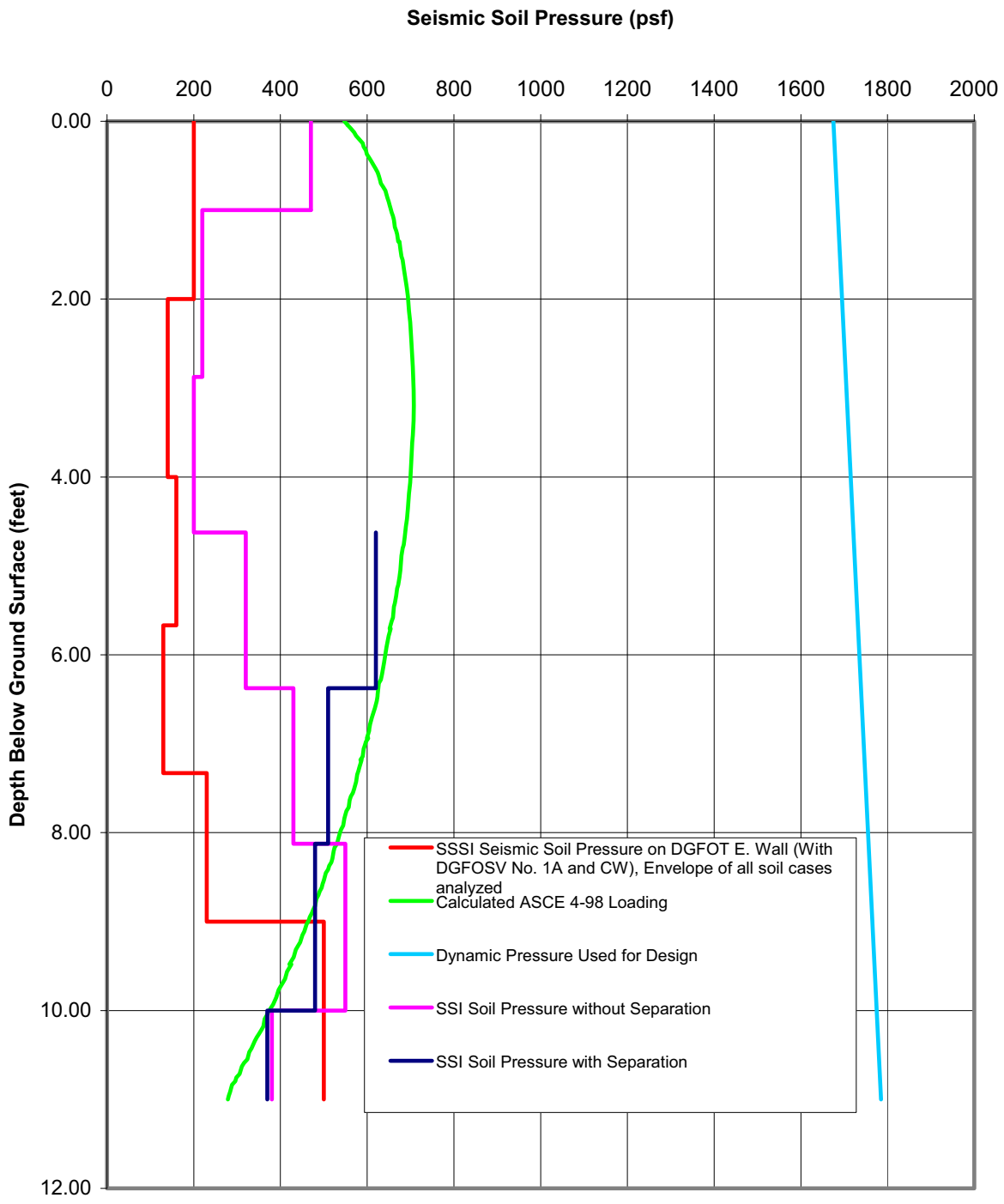

Figure 3H.7-7 SSI, SSSI, ASCE 4-98 and Design Lateral Seismic Soil Pressures (psf) on Fuel Oil Tunnel East Wall with Diesel Generator Fuel Oil Storage Vault and Crane Wall

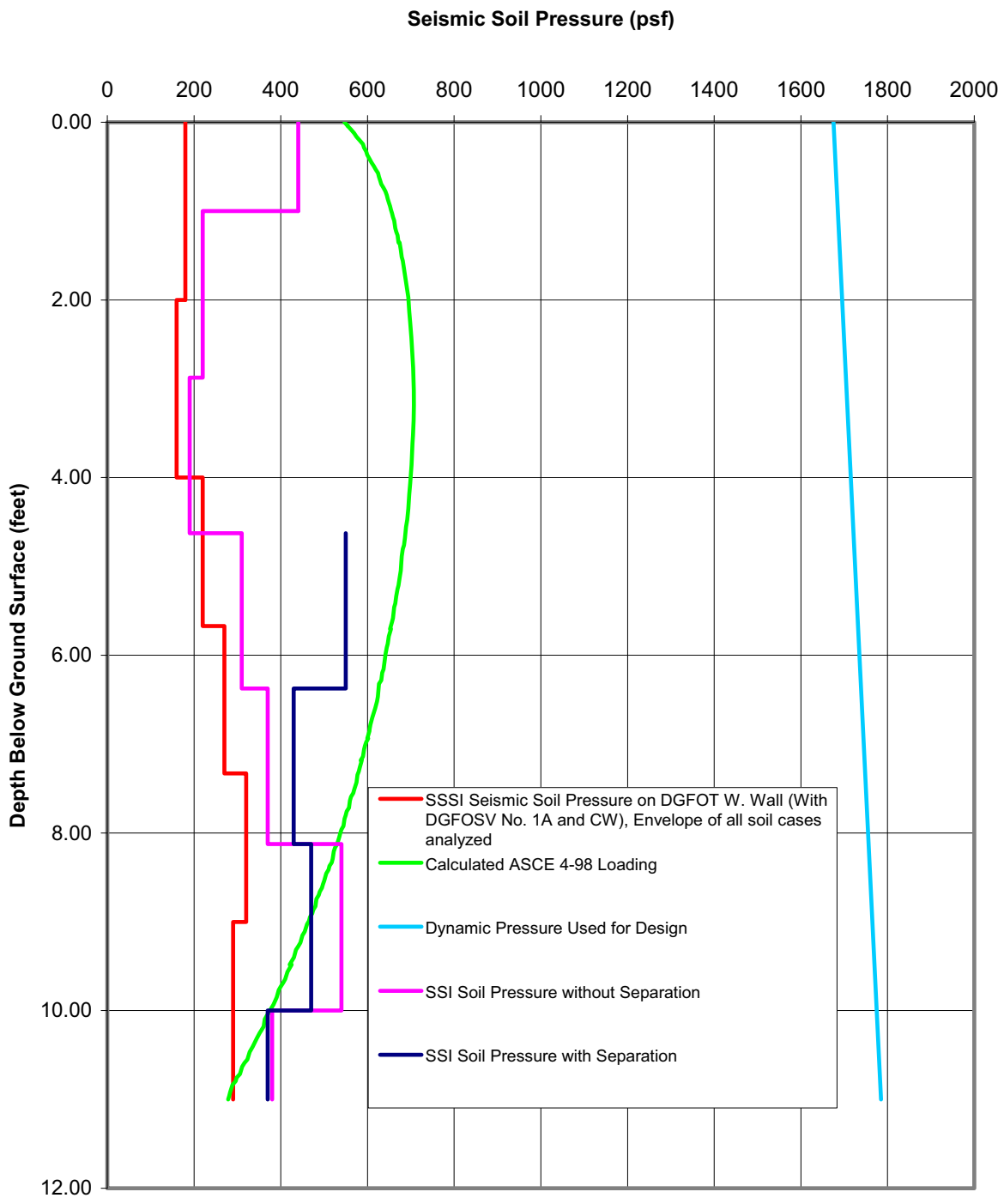

Figure 3H.7-8 SSI, SSSI, ASCE 4-98 and Design Lateral Seismic Soil Pressures (psf) on Fuel Oil Tunnel West Wall with Diesel Generator Fuel Oil Storage Vault and Crane Wall

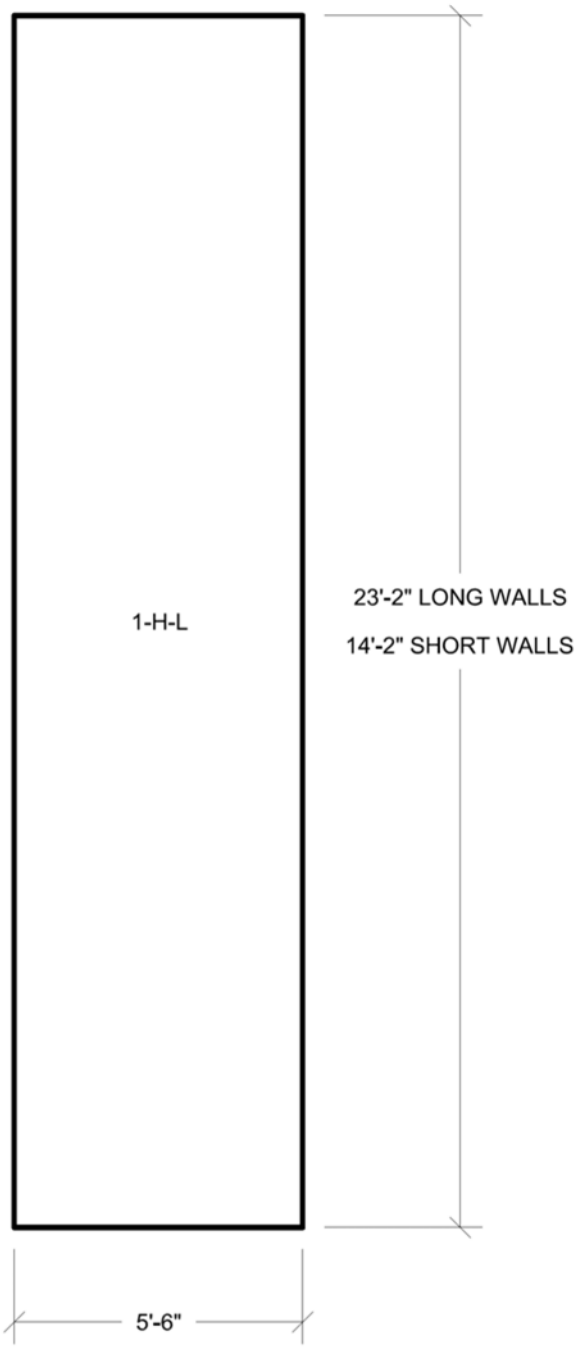

Figure 3H.7-9 Access Region Walls Looking From Outside Horizontal Reinforcement Zones Near Side and Far Side Faces

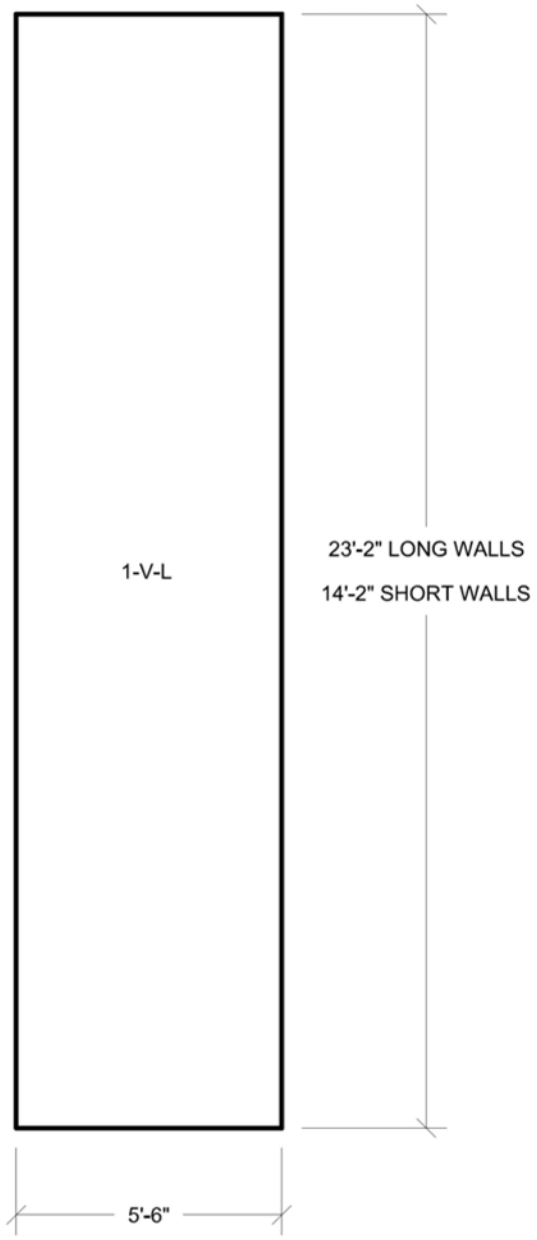

Figure 3H.7-10 Access Region Walls Looking From Outside Vertical Reinforcement Zones Near Side and Far Side Faces

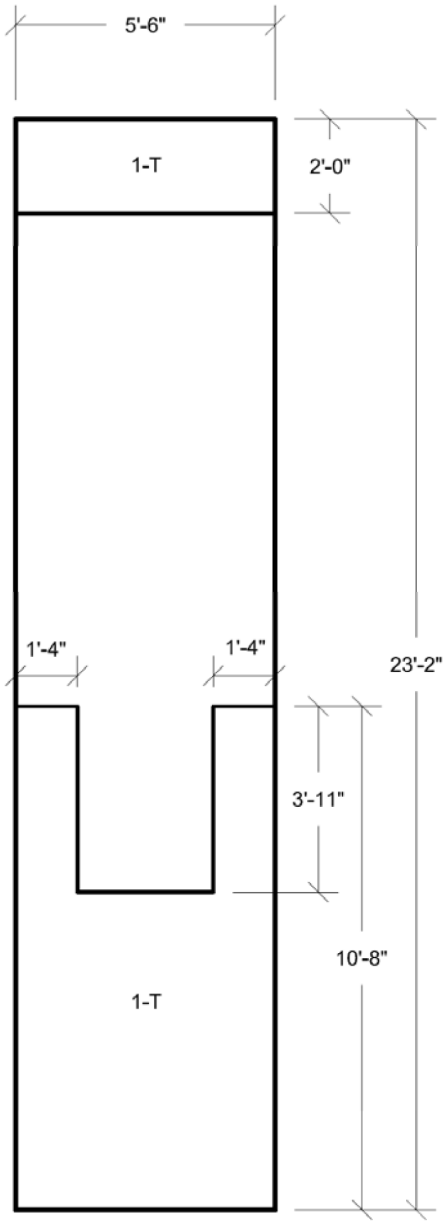

Figure 3H.7-10A Access Region Walls Looking From Outside Transverse Reinforcement Zones

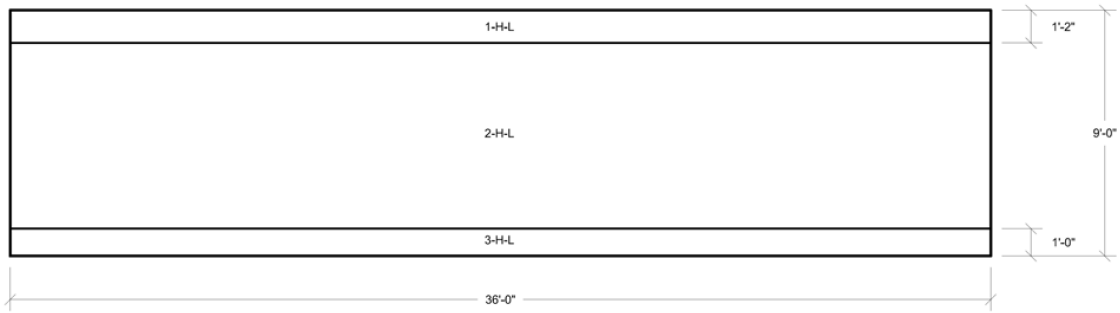

Figure 3H.7-11 Tunnel Walls Looking From Outside Horizontal Reinforcement Zones Near Side Face

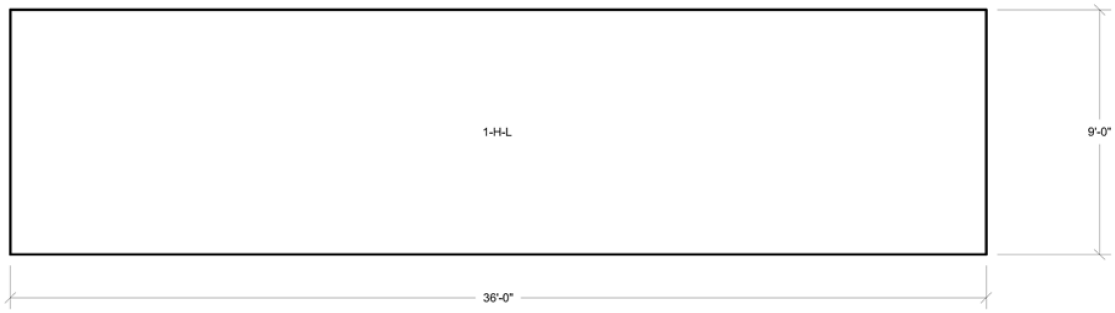

Figure 3H.7-12 Tunnel Walls Looking From Outside Horizontal Reinforcement Zones Far Side Face

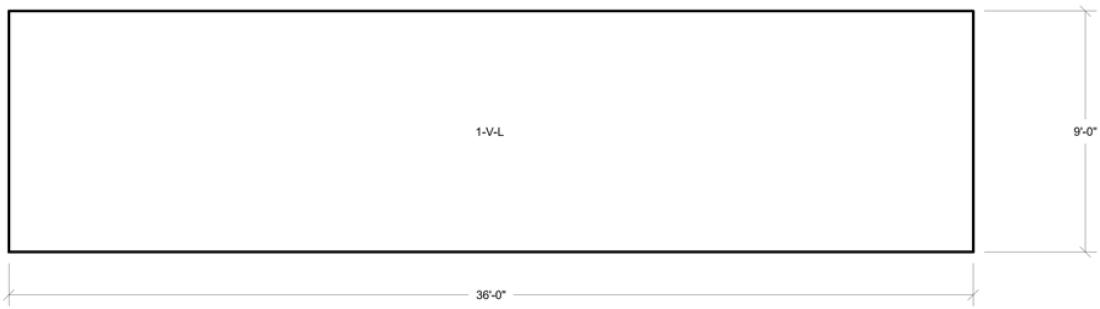

Figure 3H.7-13 Tunnel Walls Looking From Outside Vertical Reinforcement Zones Near Side Face

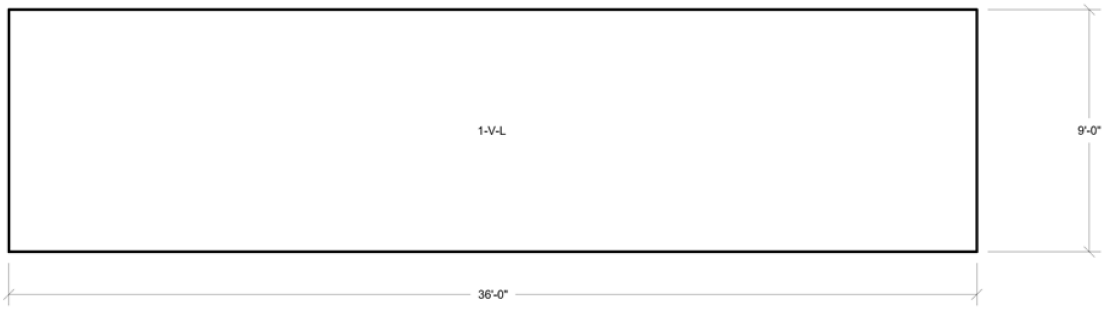

Figure 3H.7-14 Tunnel Walls Looking From Outside Vertical Reinforcement Zones Far Side Face

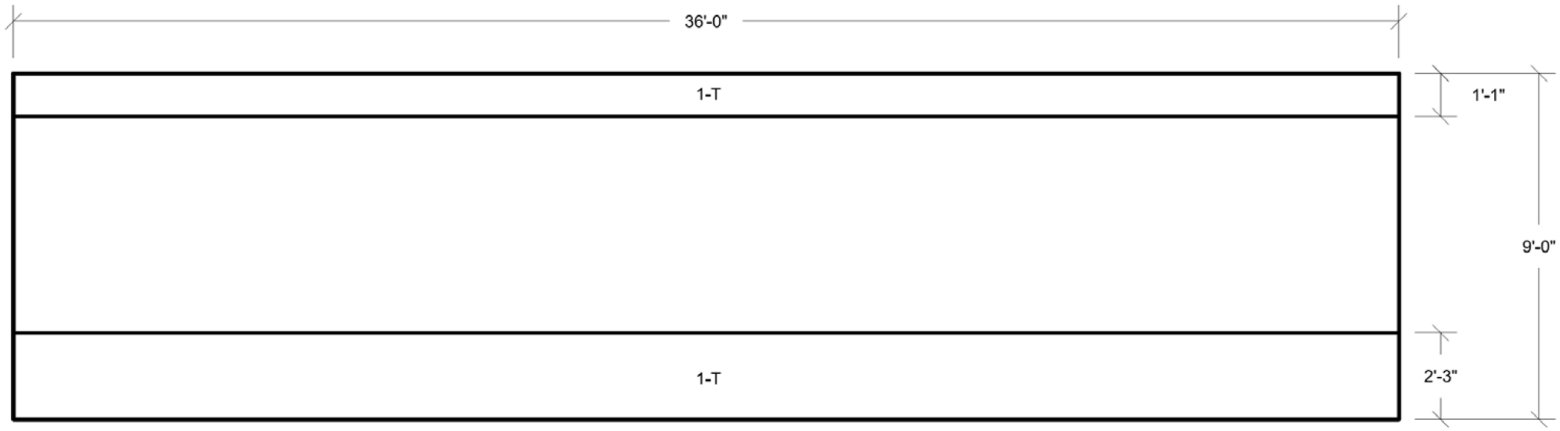

Figure 3H.7-14A Tunnel Walls Looking From Outside Transverse Reinforcement Zones

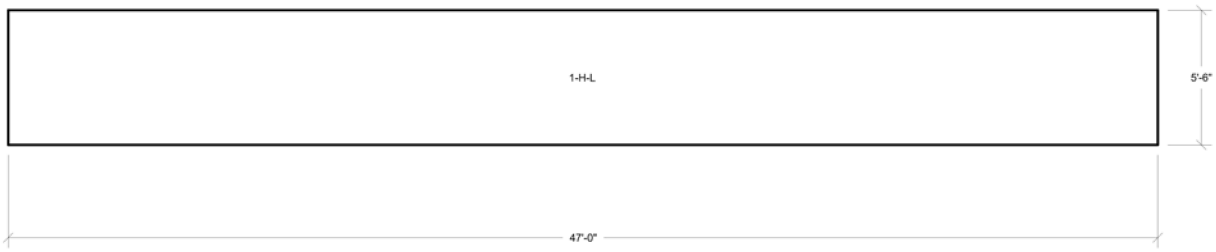

Figure 3H.7-15 Tunnel and Access Region Basemat Looking Down Horizontal Reinforcement Zones Near Side and Far Side Faces

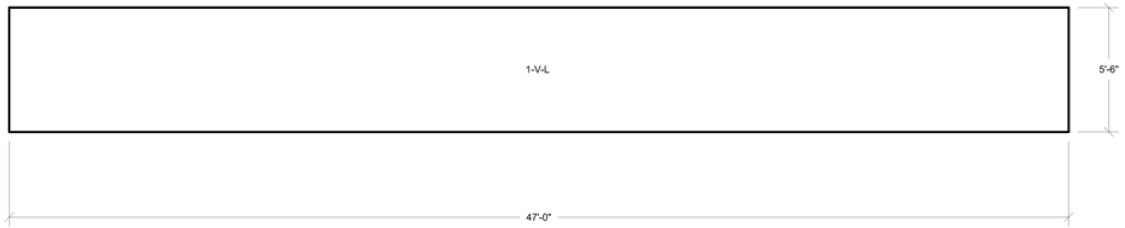

Figure 3H.7-16 Tunnel and Access Region Basemat Looking Down Vertical Reinforcement Zones Near Side and Far Side Faces

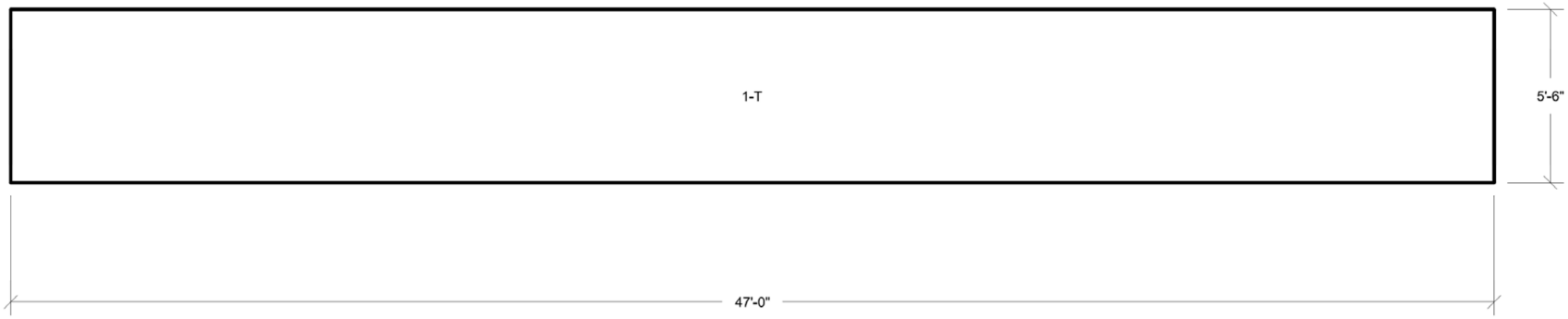

Figure 3H.7-17 Tunnel and Access Region Basemat Looking Down Transverse Reinforcement Zones

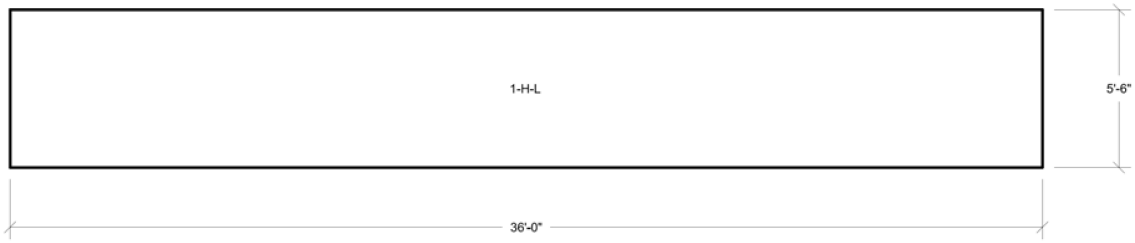

Figure 3H.7-18 Roof of Tunnel Looking Down Horizontal Reinforcement Zones Near Side and Far Side Faces

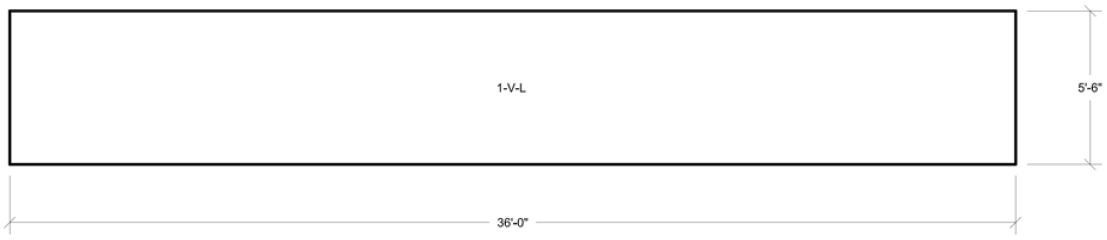

Figure 3H.7-19 Roof of Tunnel Looking Down Vertical Reinforcement Zones Near Side and Far Side Faces

Figure 3H.7-19A Roof of Tunnel Looking Down Transverse Reinforcement Zones

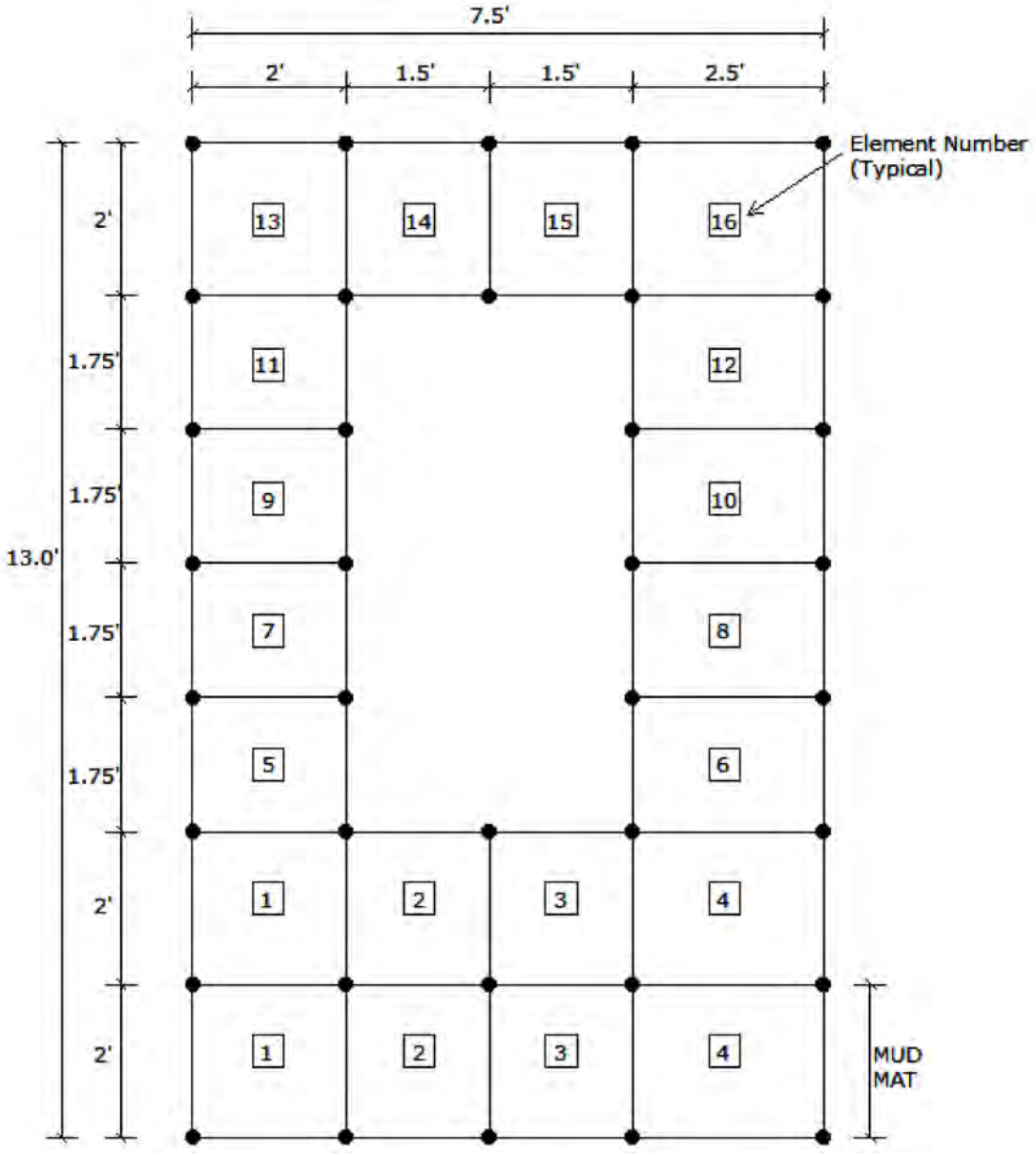

Figure 3H.7-20 2D Model for SSI Analysis of a Typical Cross section of DGFOT

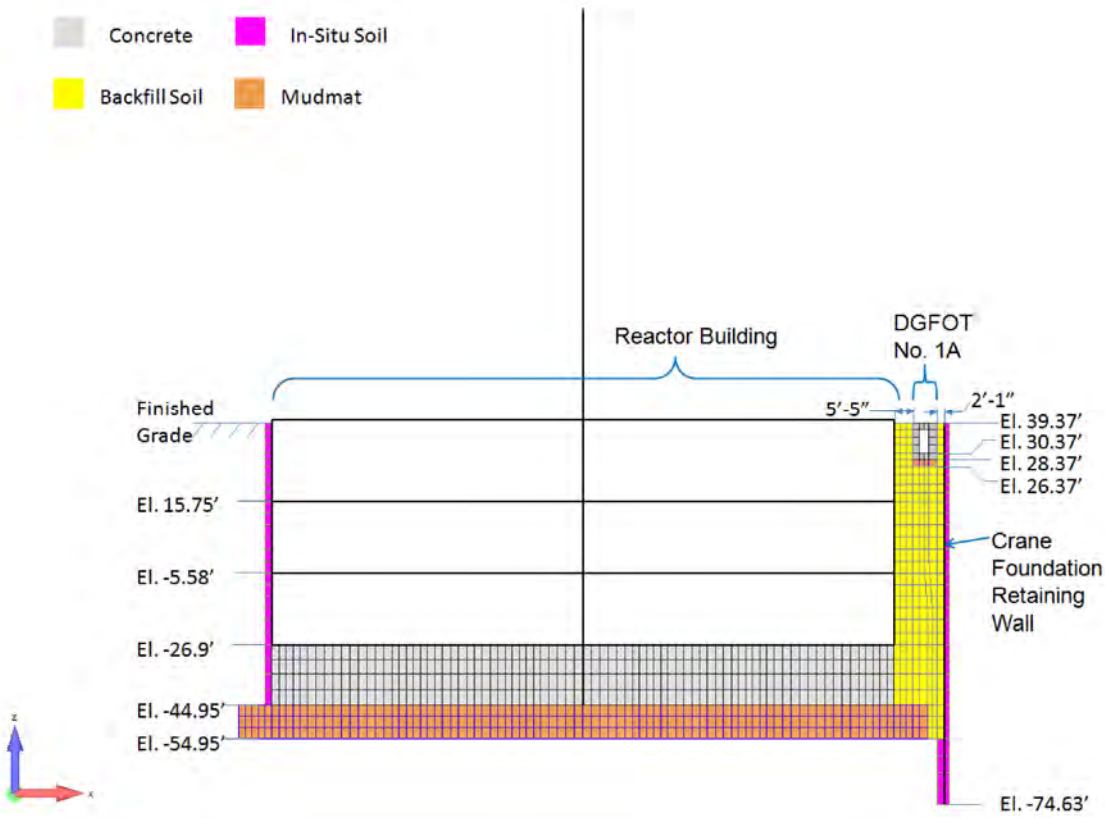

Figure 3H.7-21 2D SSSI Model of RB, DGFOT and Crane Foundation Retaining Wall

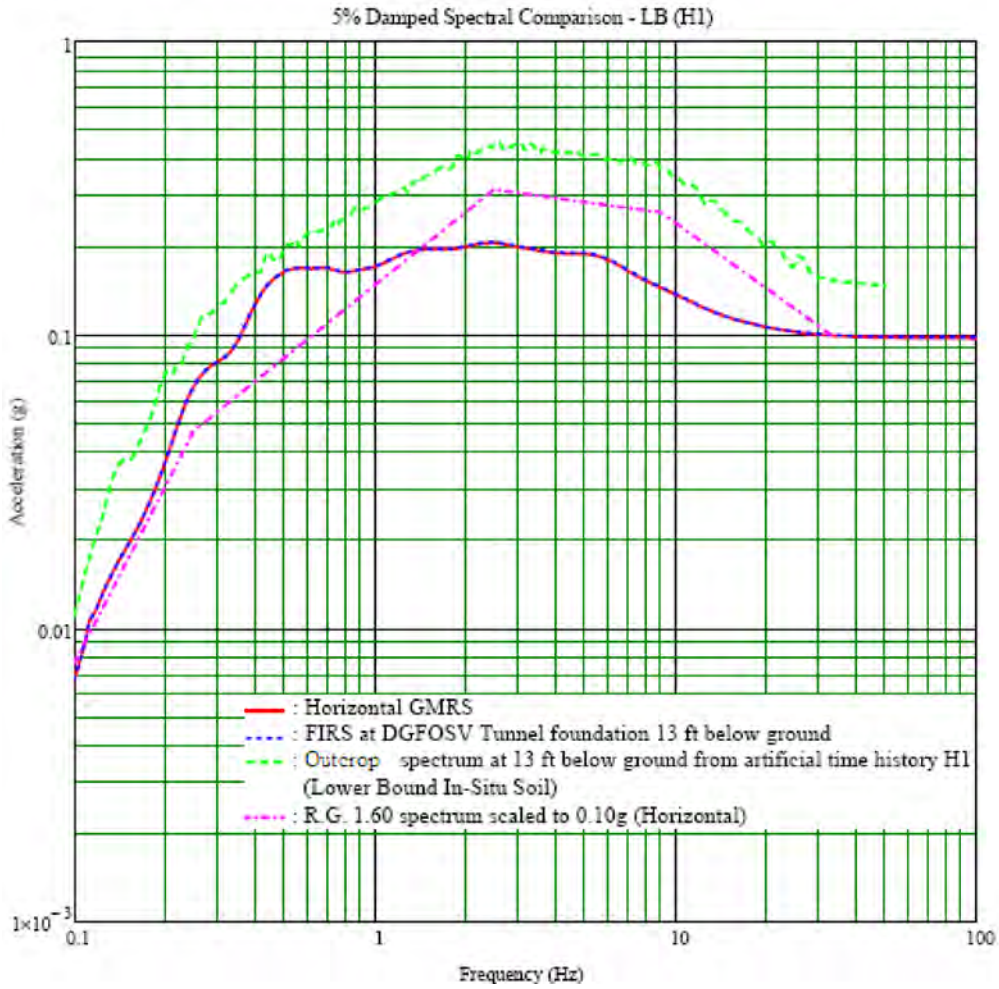

Figure 3H.7-22 Comparison of Spectra at Foundation of DGFOT – Lower Bound Soil Properties, Horizontal X Direction

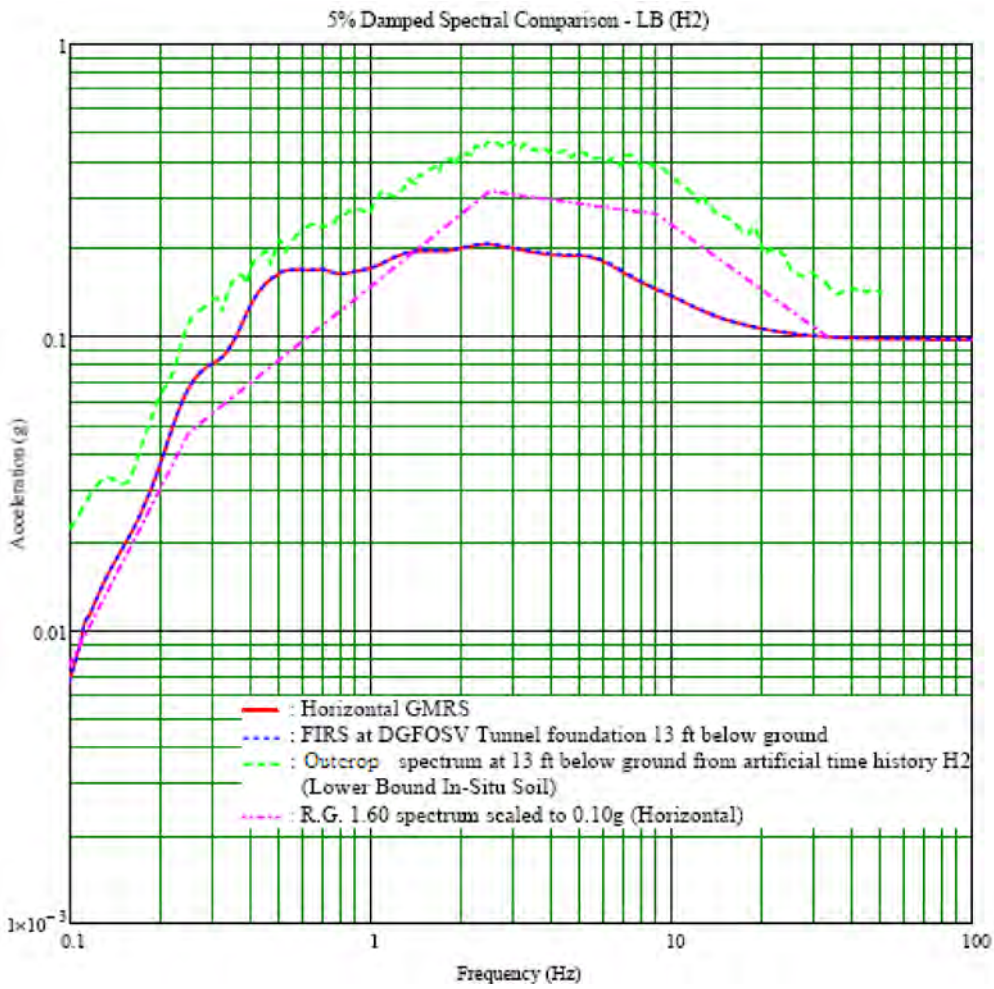

Figure 3H.7-23 Comparison of Spectra at Foundation of DGFOT – Lower Bound Soil Properties, Horizontal Y Direction

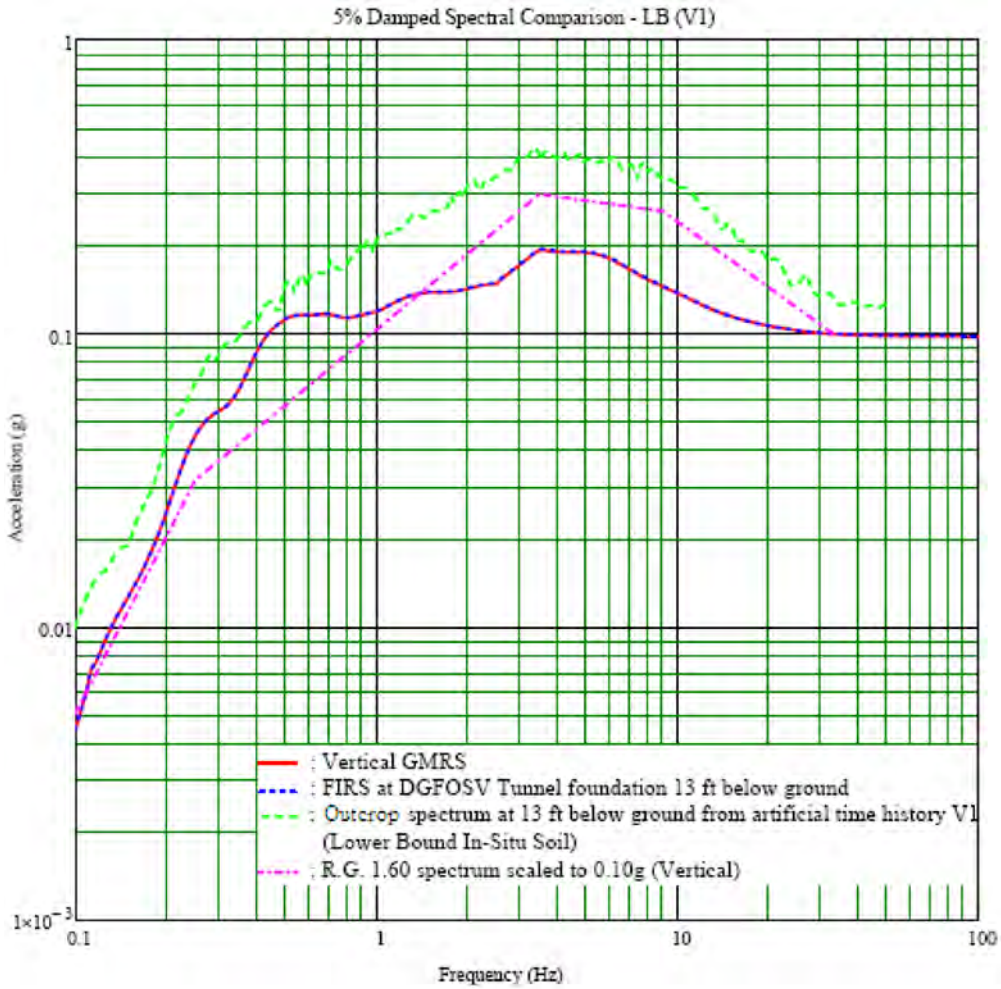

Figure 3H.7-24 Comparison of Spectra at Foundation of DGFOT – Lower Bound Soil Properties, Vertical Direction

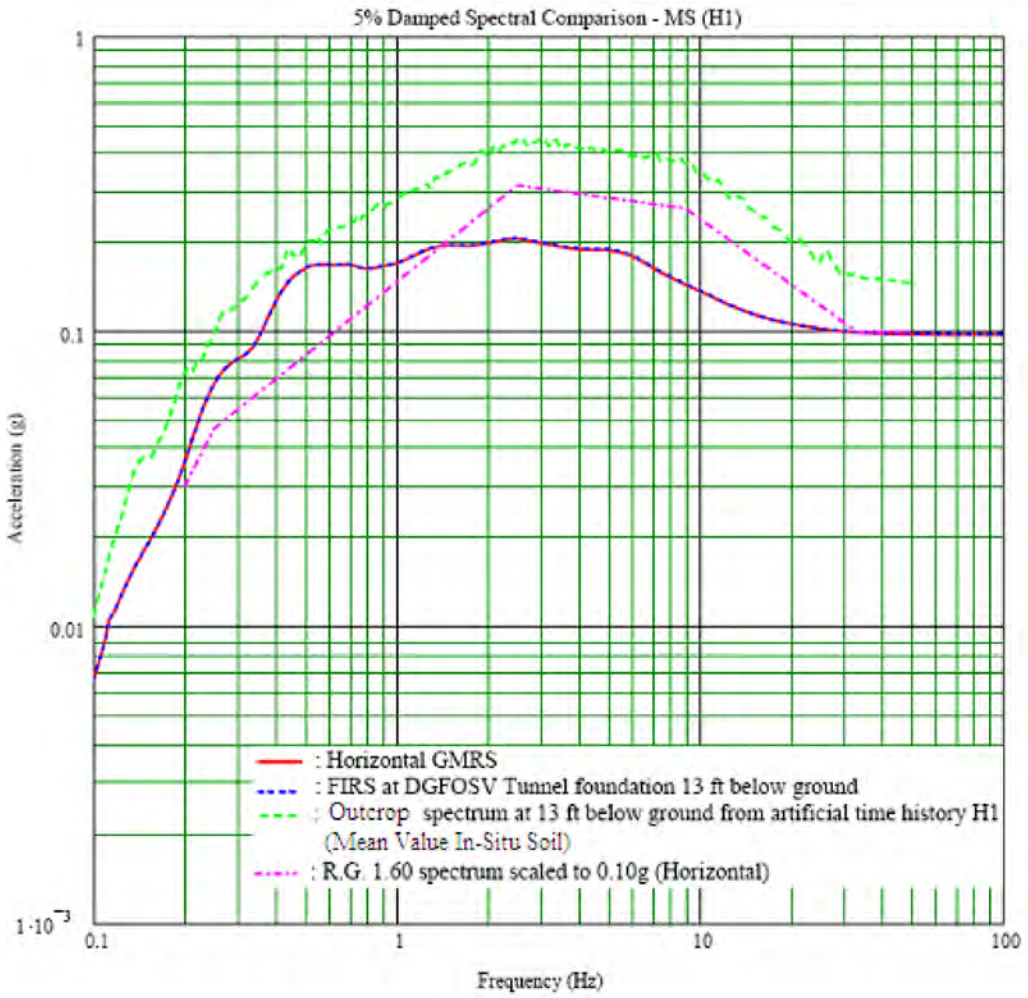

Figure 3H.7-25 Comparison of Spectra at Foundation of DGFOT – Mean Soil Properties, Horizontal X Direction

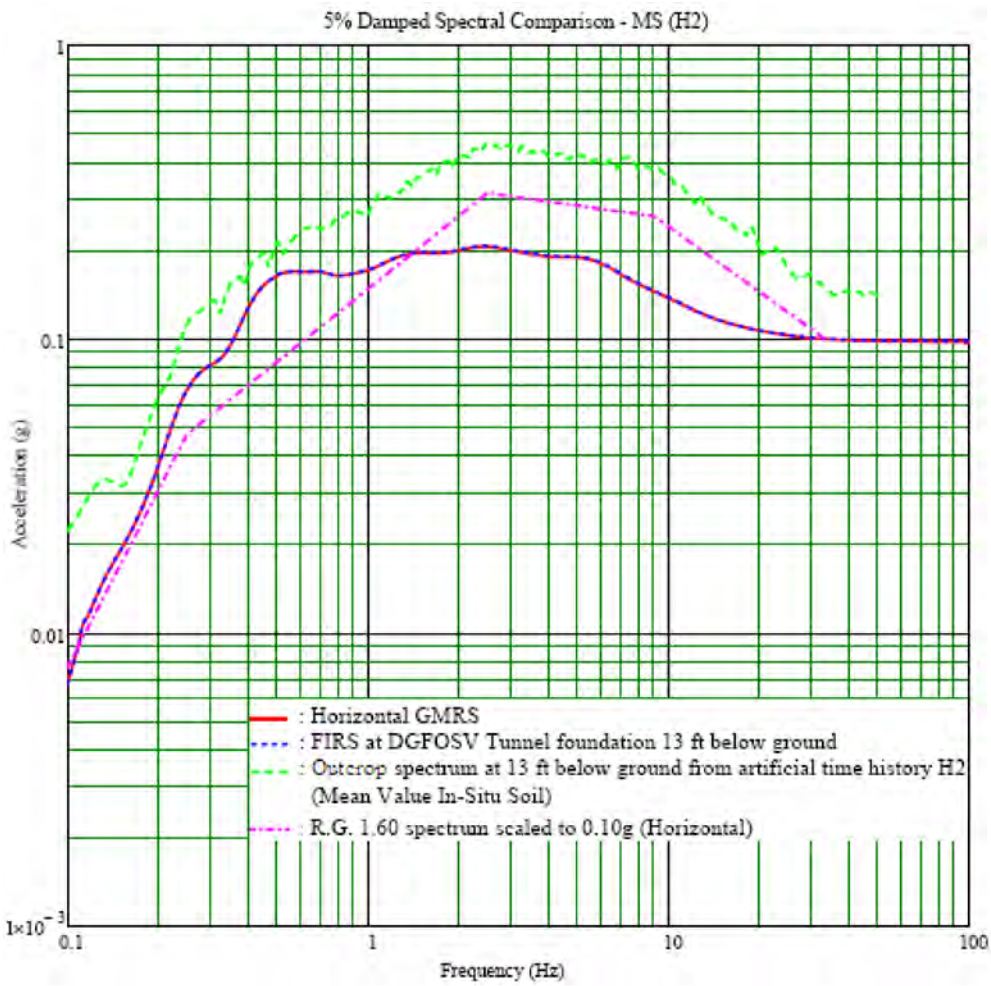

Figure 3H.7-26 Comparison of Spectra at Foundation of DGFOT – Mean Soil Properties, Horizontal Y Direction

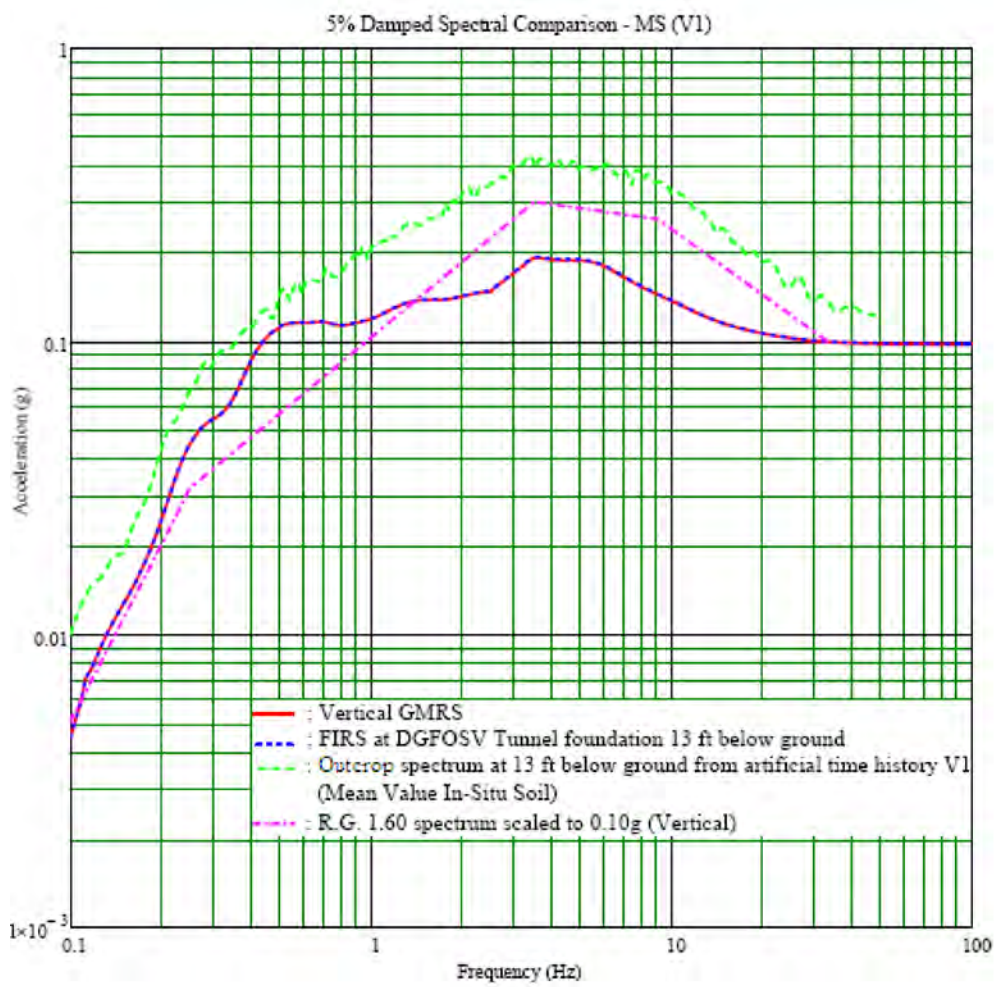

Figure 3H.7-27 Comparison of Spectra at Foundation of DGFOT – Mean Soil Properties, Vertical Direction

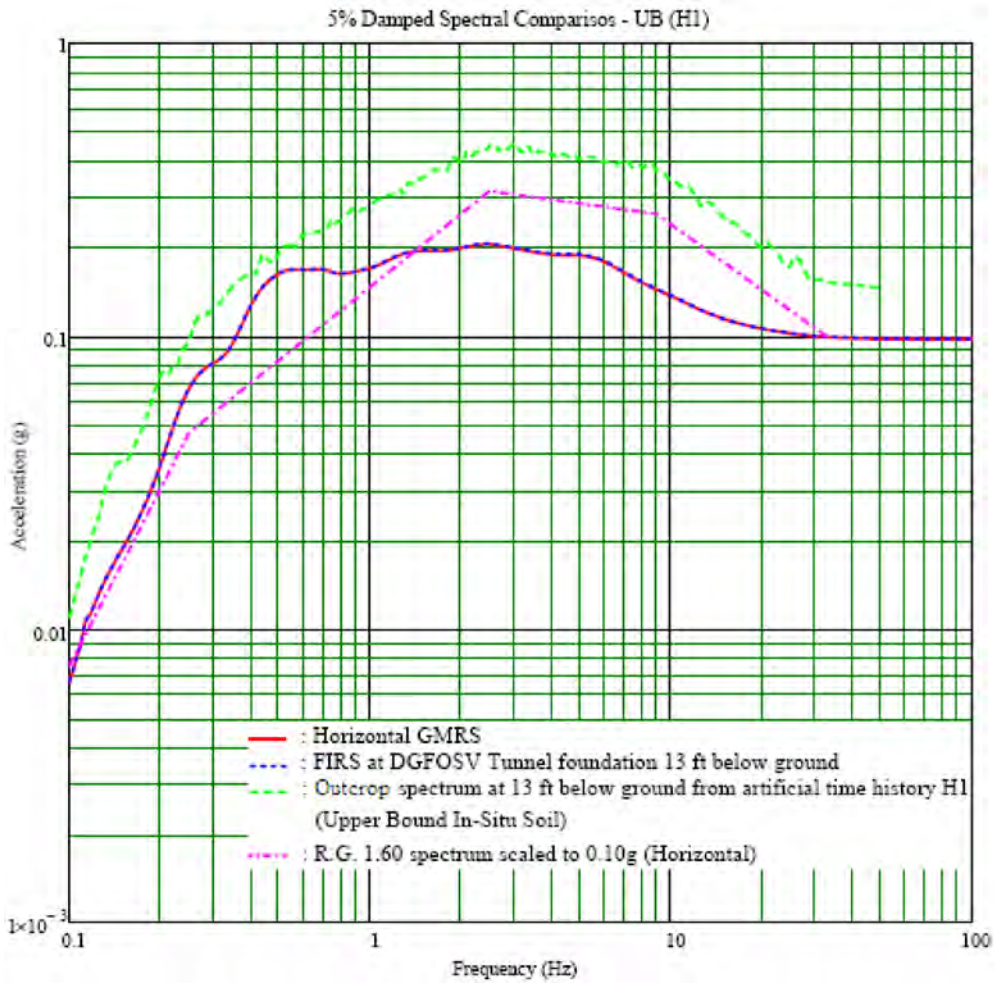

Figure 3H.7-28 Comparison of Spectra at Foundation of DGFOT – Upper Bound Soil Properties, Horizontal X Direction

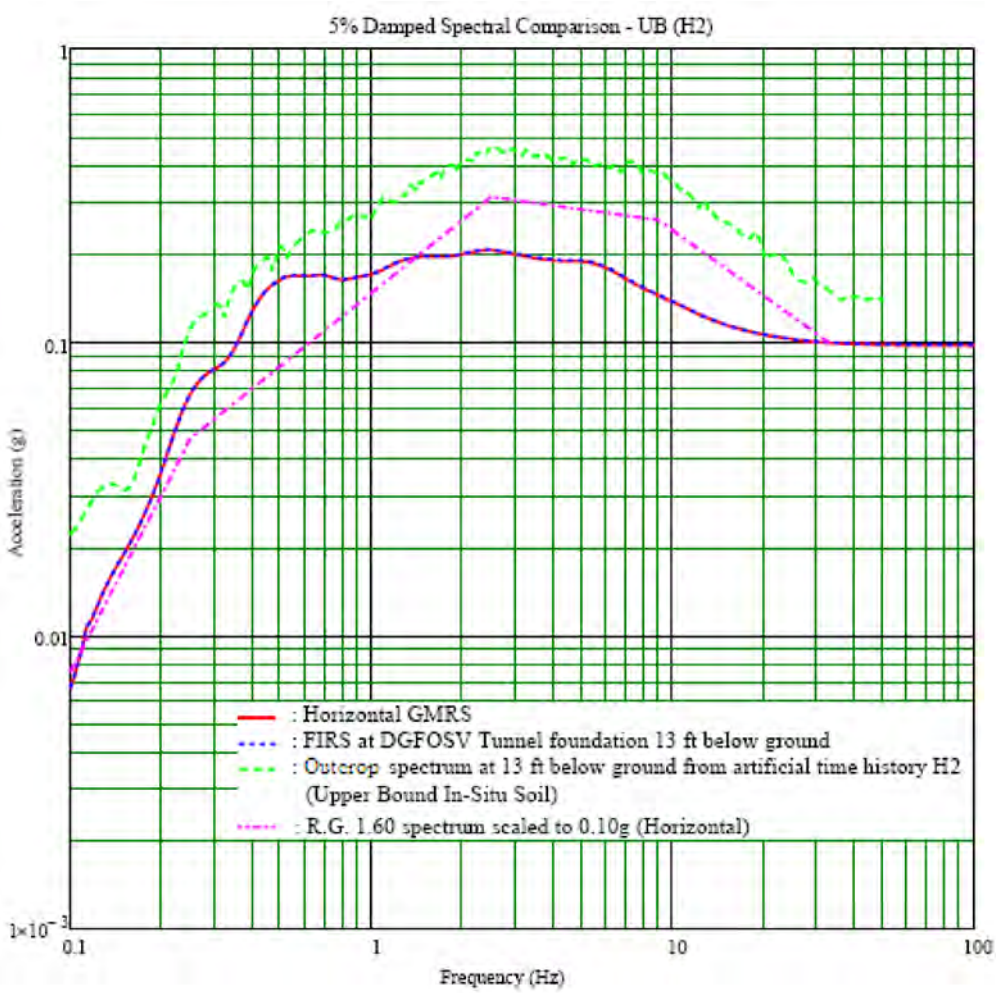

Figure 3H.7-29 Comparison of Spectra at Foundation of DGFOT – Upper Bound Soil Properties, Horizontal Y Direction

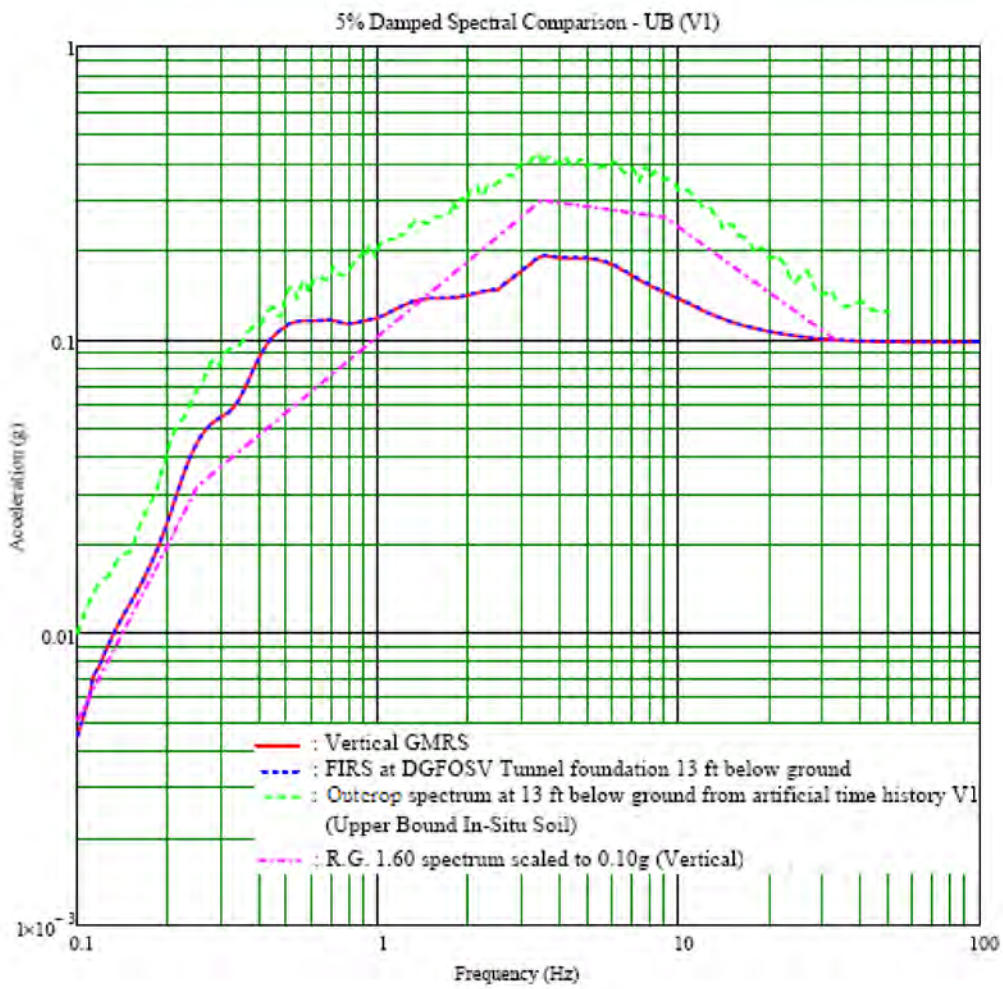

Figure 3H.7-30 Comparison of Spectra at Foundation of DGFOT – Upper Bound Soil Properties, Vertical Direction

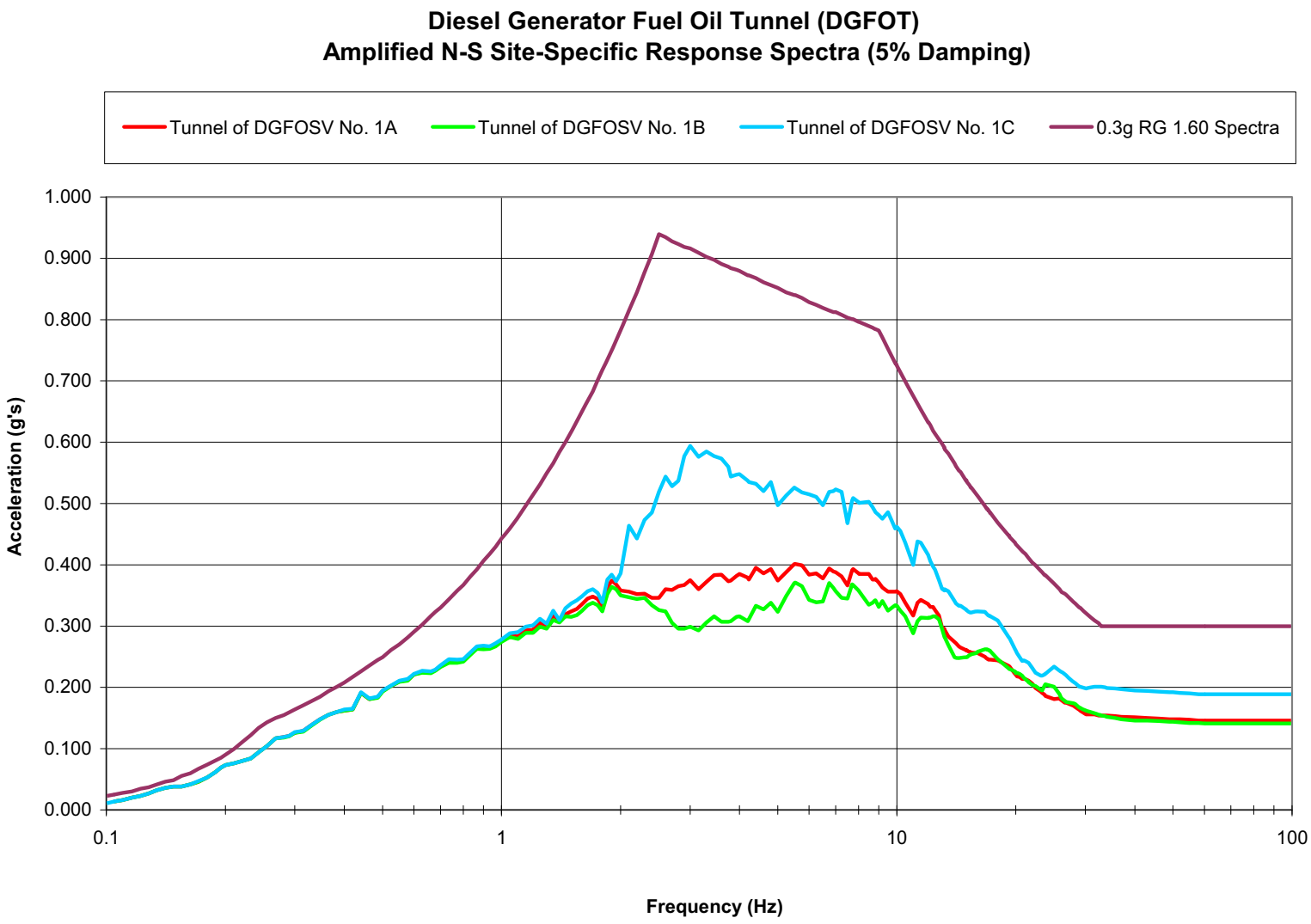

Figure 3H.7-30a Amplified N-S Site-Specific Response Spectra Diesel Generator Fuel Oil Tunnel (DGFOT)

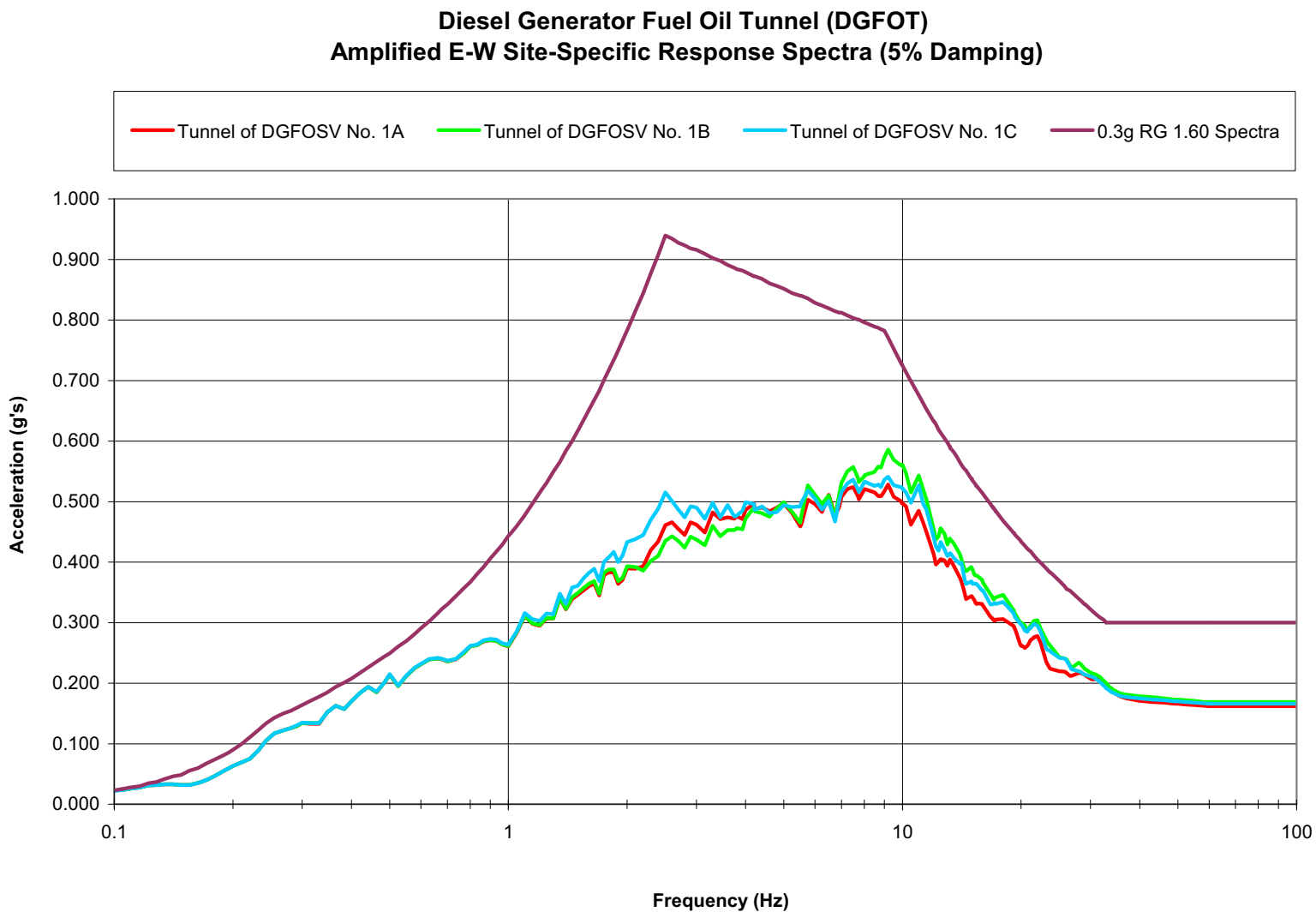

Figure 3H.7-30b Amplified E-W Site-Specific Response Spectra Diesel Generator Fuel Oil Tunnel (DGFOT)

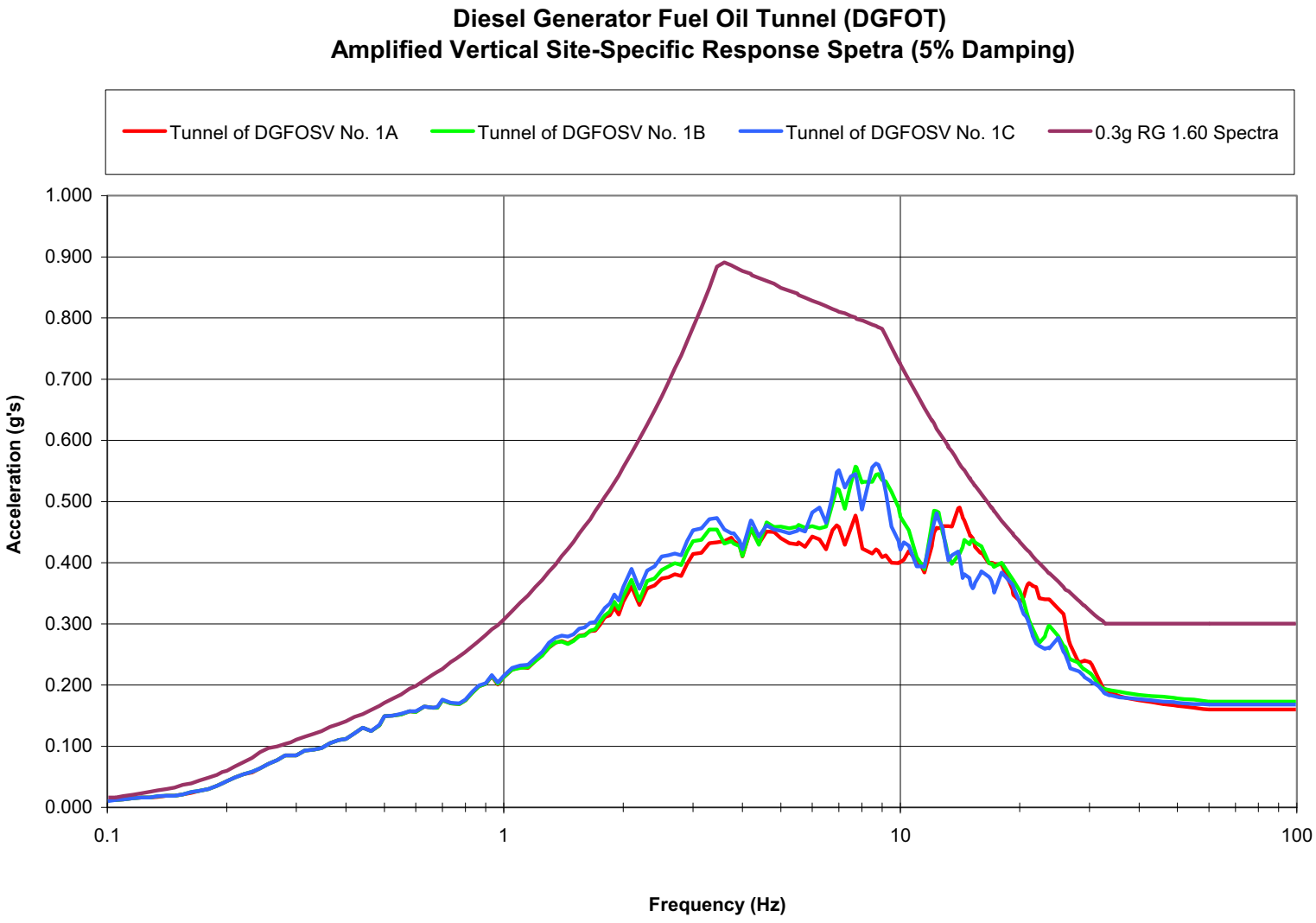

Figure 3H.7-30c Amplified Vertical Site-Specific Response Spectra Diesel Generator Fuel Oil Tunnel (DGFOT)

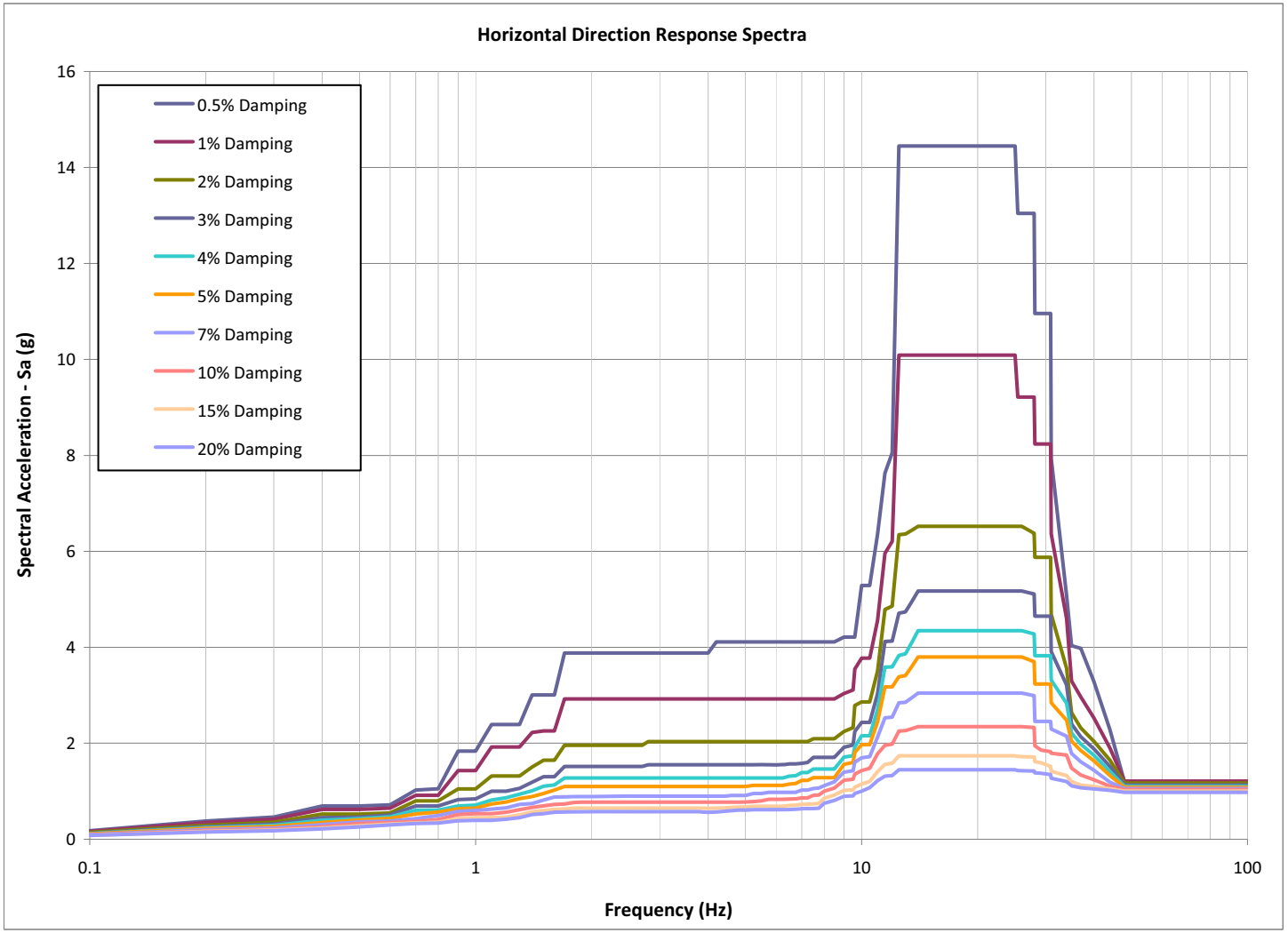

Figure 3H.7-31 Enveloped, Broadened Horizontal Response Spectra for DGFOTs

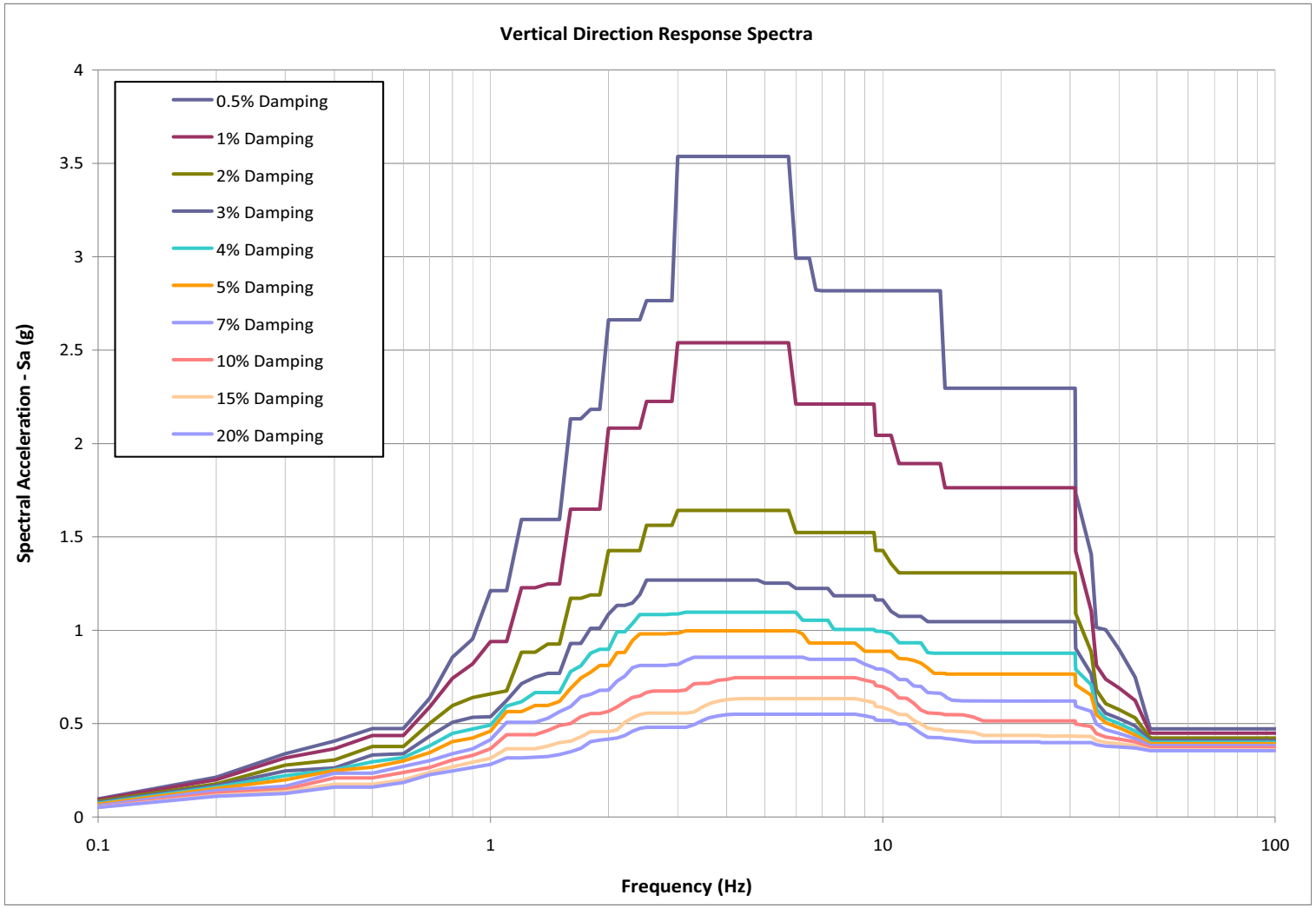

Figure 3H.7-32 Enveloped, Broadened Vertical Response Spectra for DGFOTs

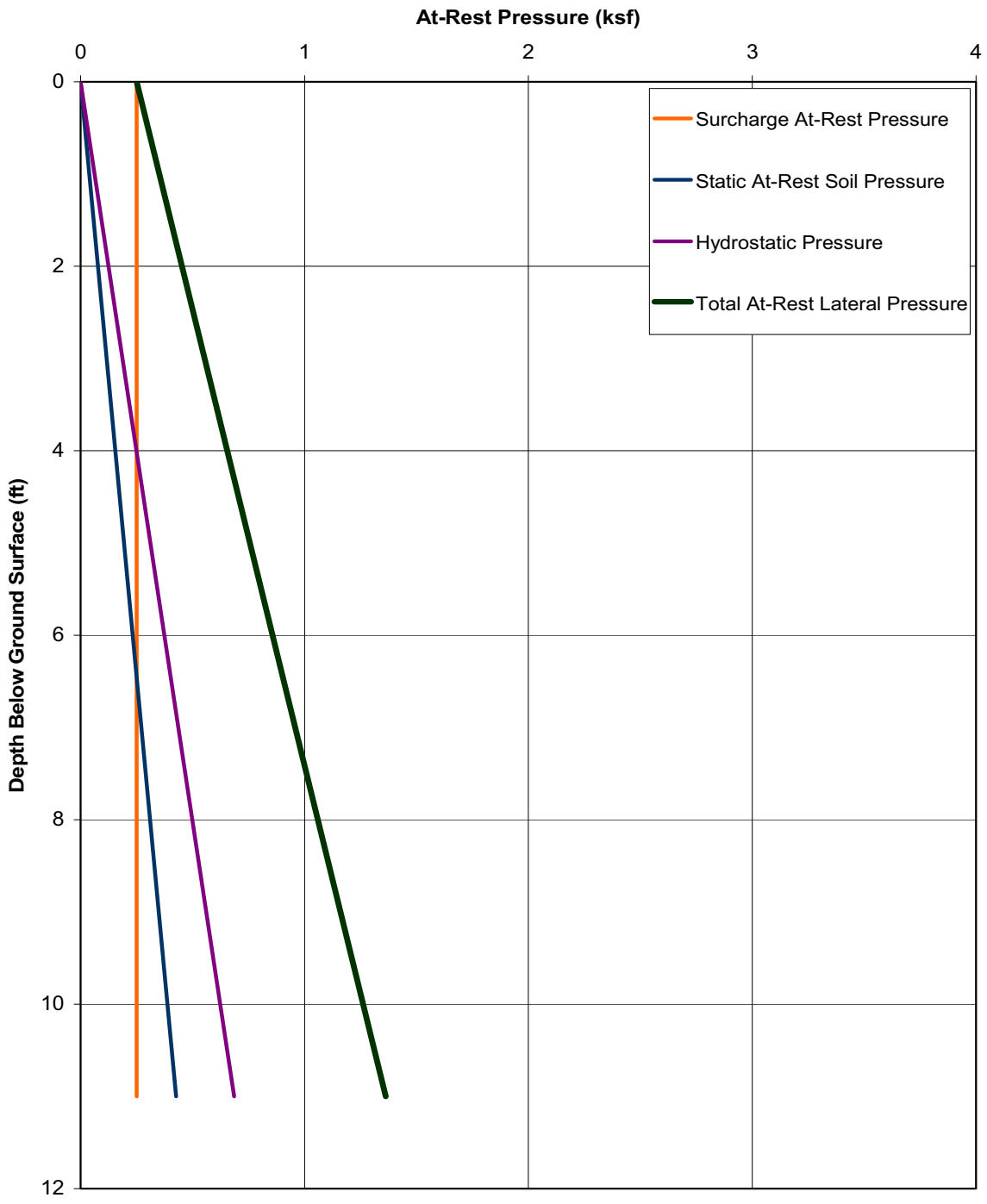

Figure 3H.7-33 At-Rest Lateral Earth Pressure on the DGFOT Walls

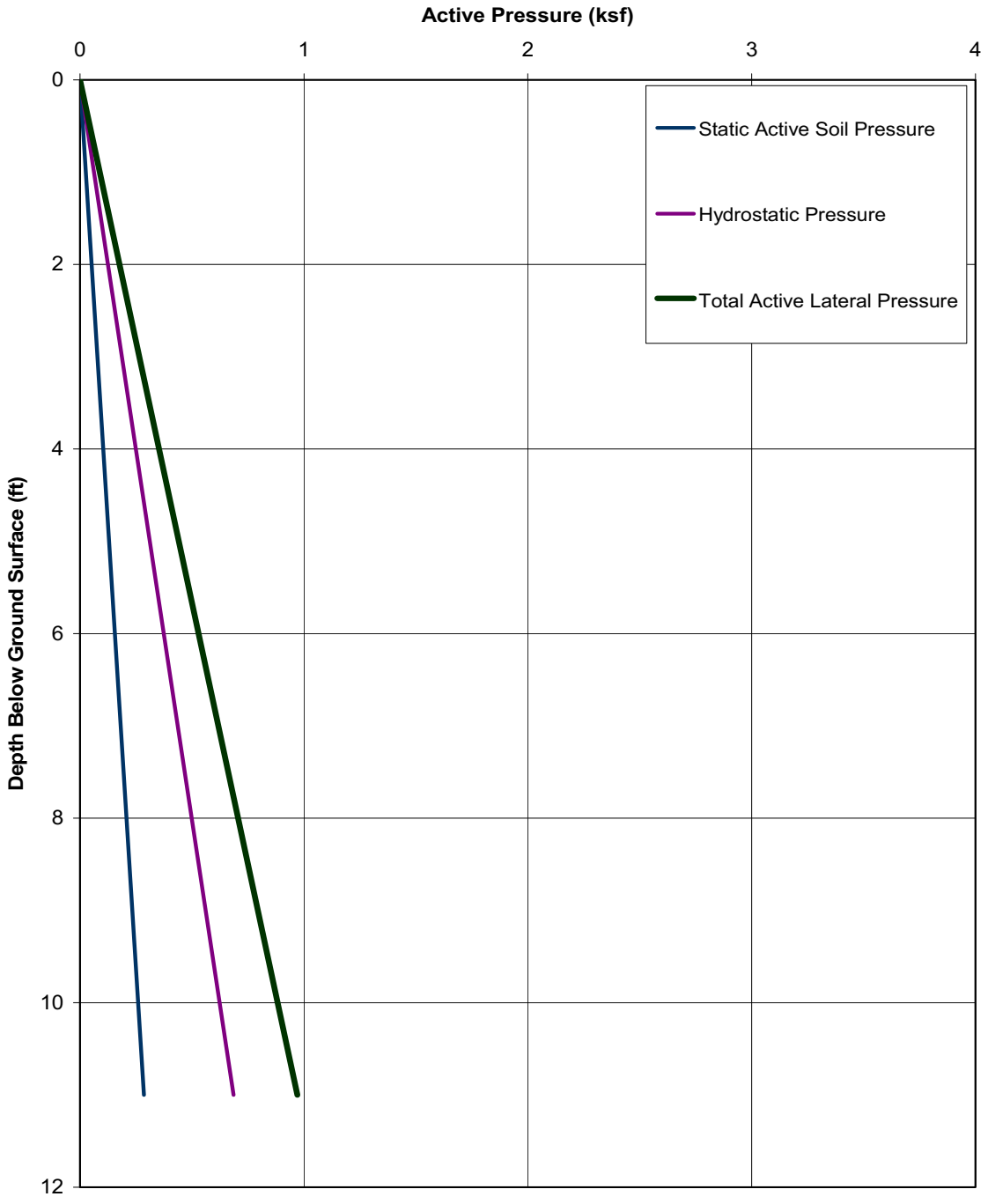

Figure 3H.7-34 Active Lateral Earth Pressure on the DGFOT Walls

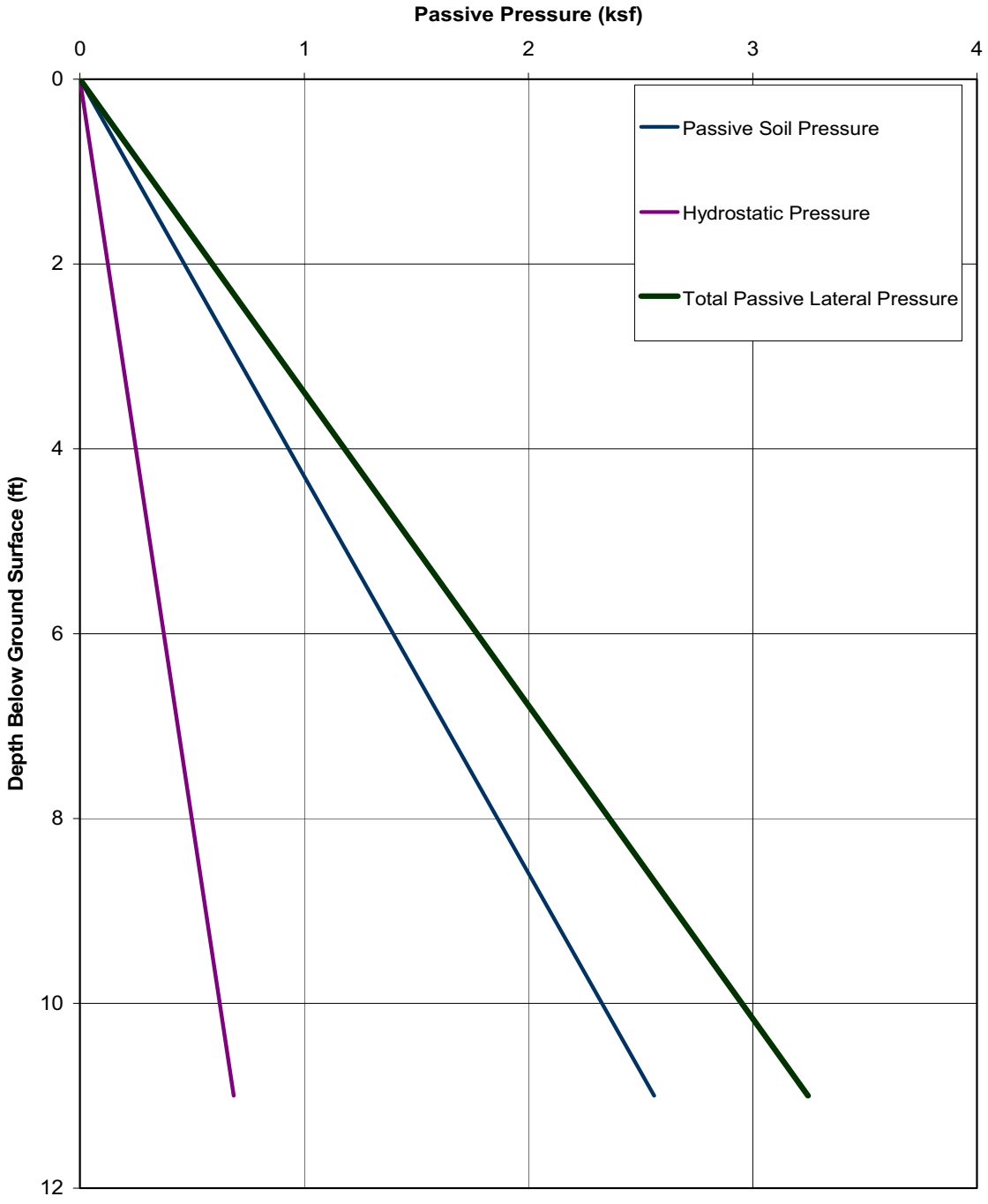

Figure 3H.7-35 Passive Lateral Earth Pressure on the DGFOT Walls

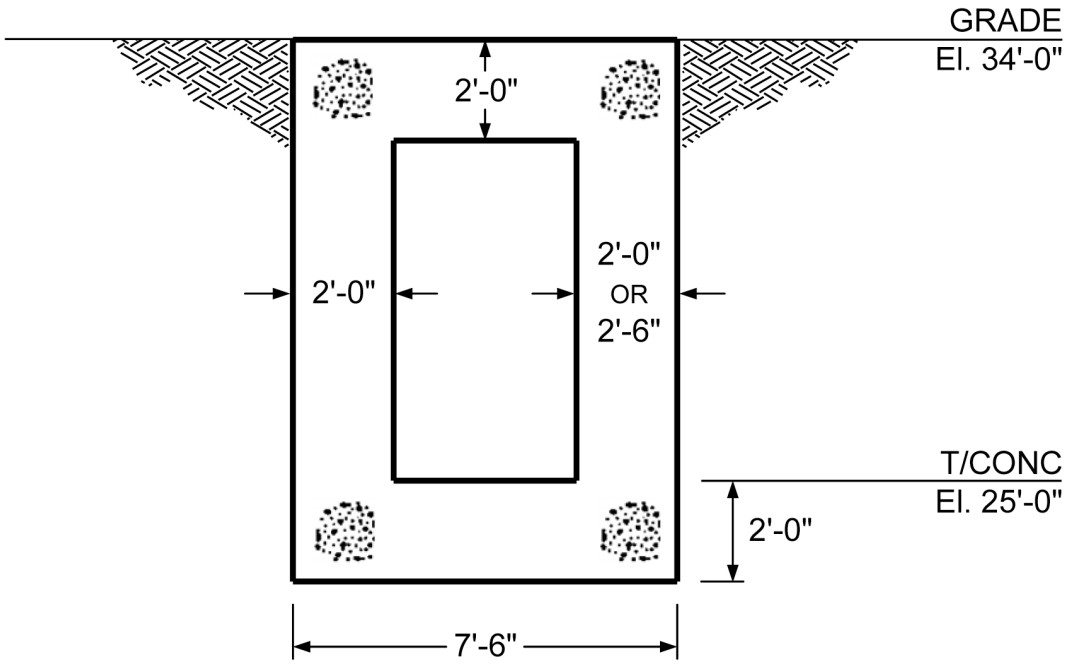

Figure 3H.7-36 Typical DGFOT Section

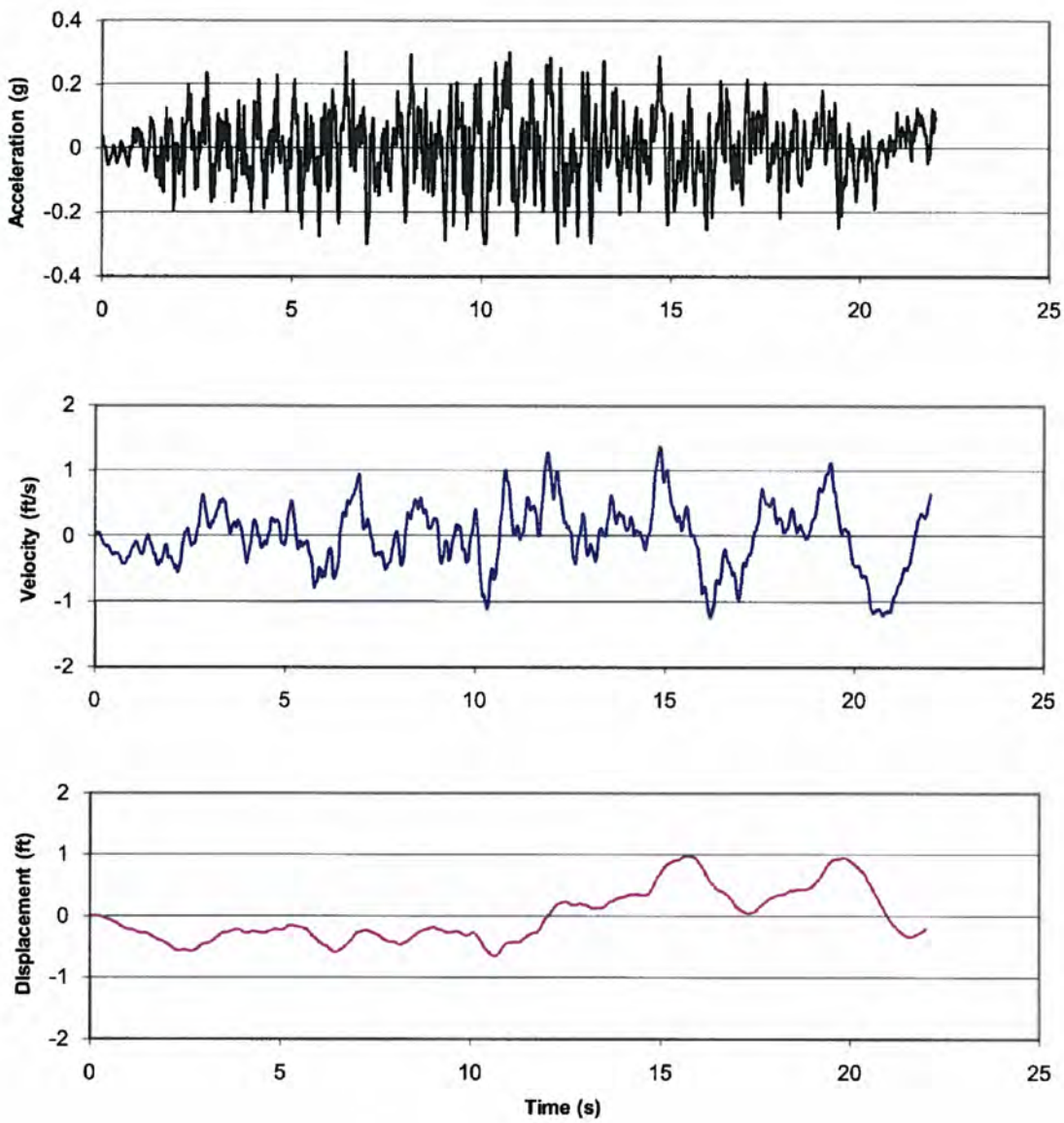

Figure 3H.8-1 Horizontal H1 Time History, Matching Horizontal R.G. 1.60 Response Spectrum

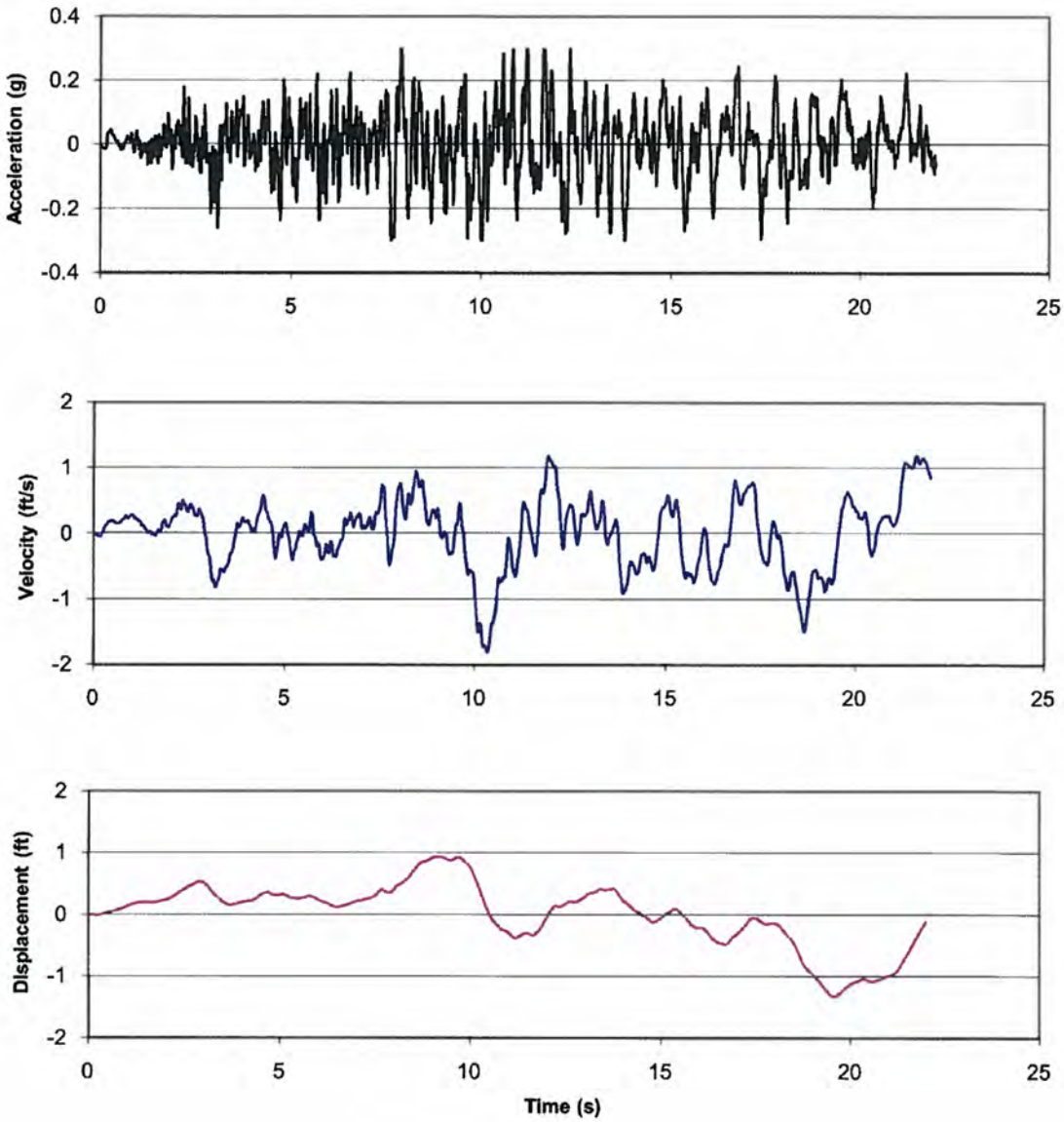

Figure 3H.8-2 Horizontal H2 Time History, Matching Horizontal R.G. 1.60 Response Spectrum

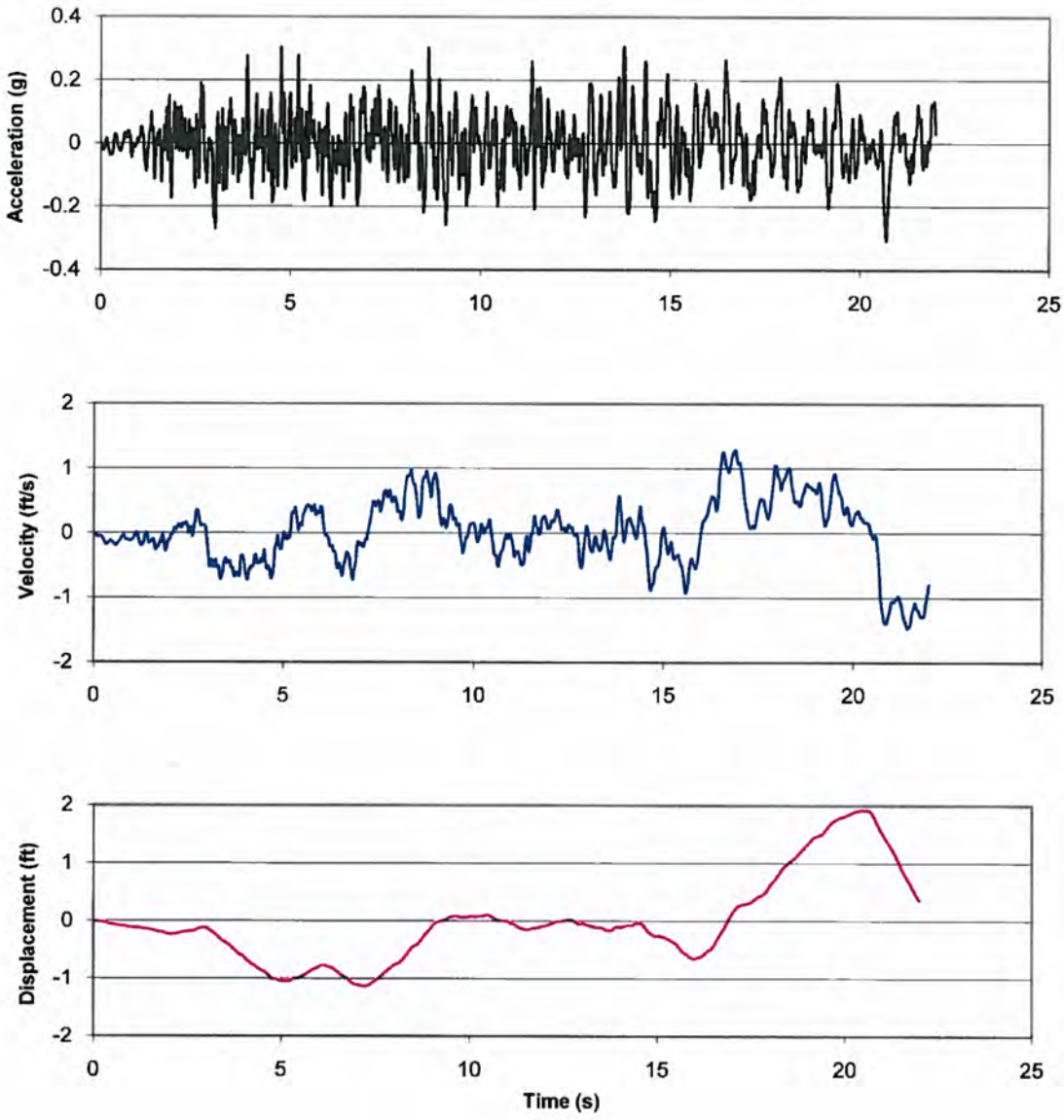

Figure 3H.8-3 Vertical V1 Time History, Matching Vertical R.G. 1.60 Response Spectrum

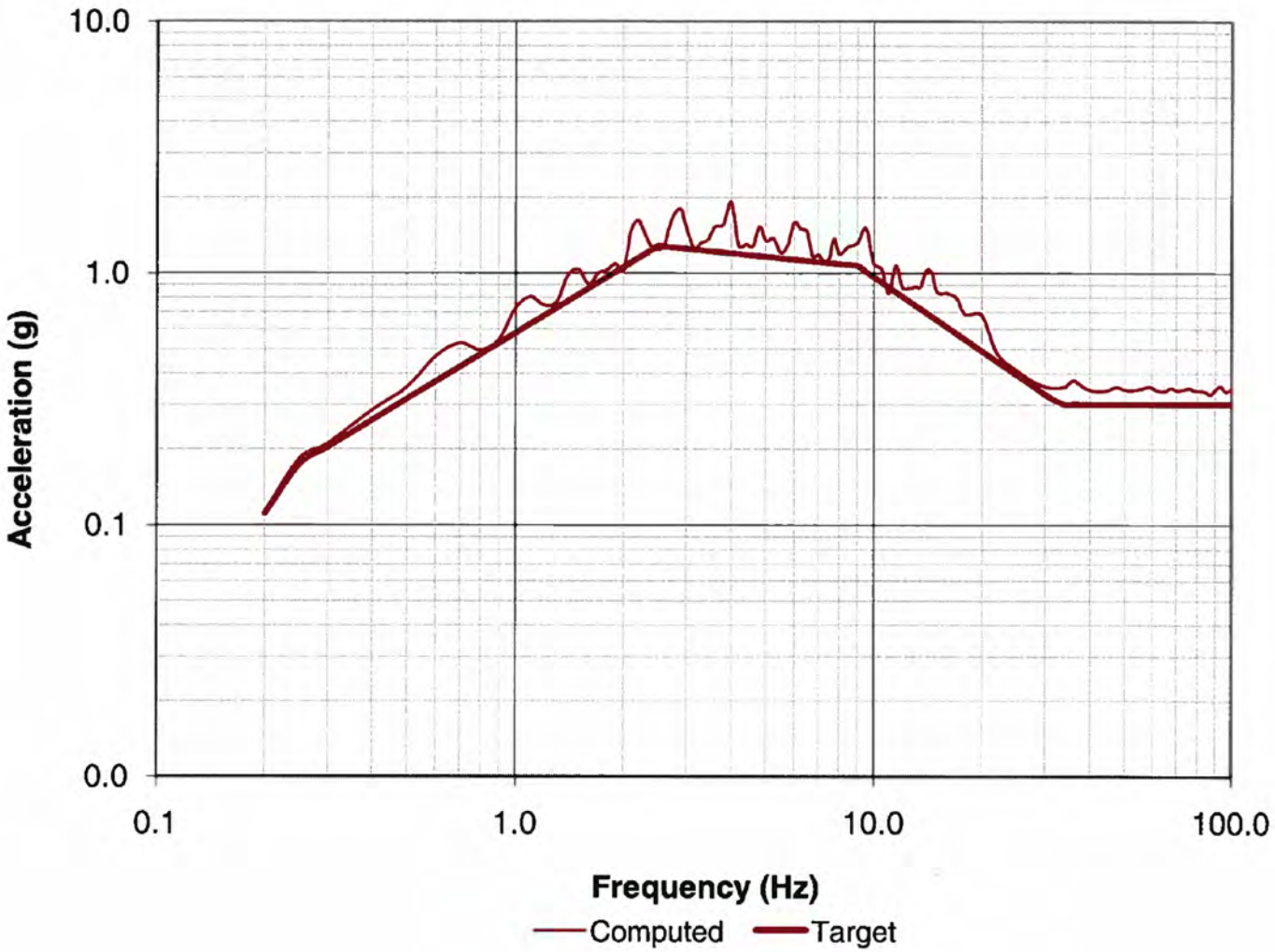

Figure 3H.8-4 Target vs. Computed Response Spectra, H1 Component, 2% damping

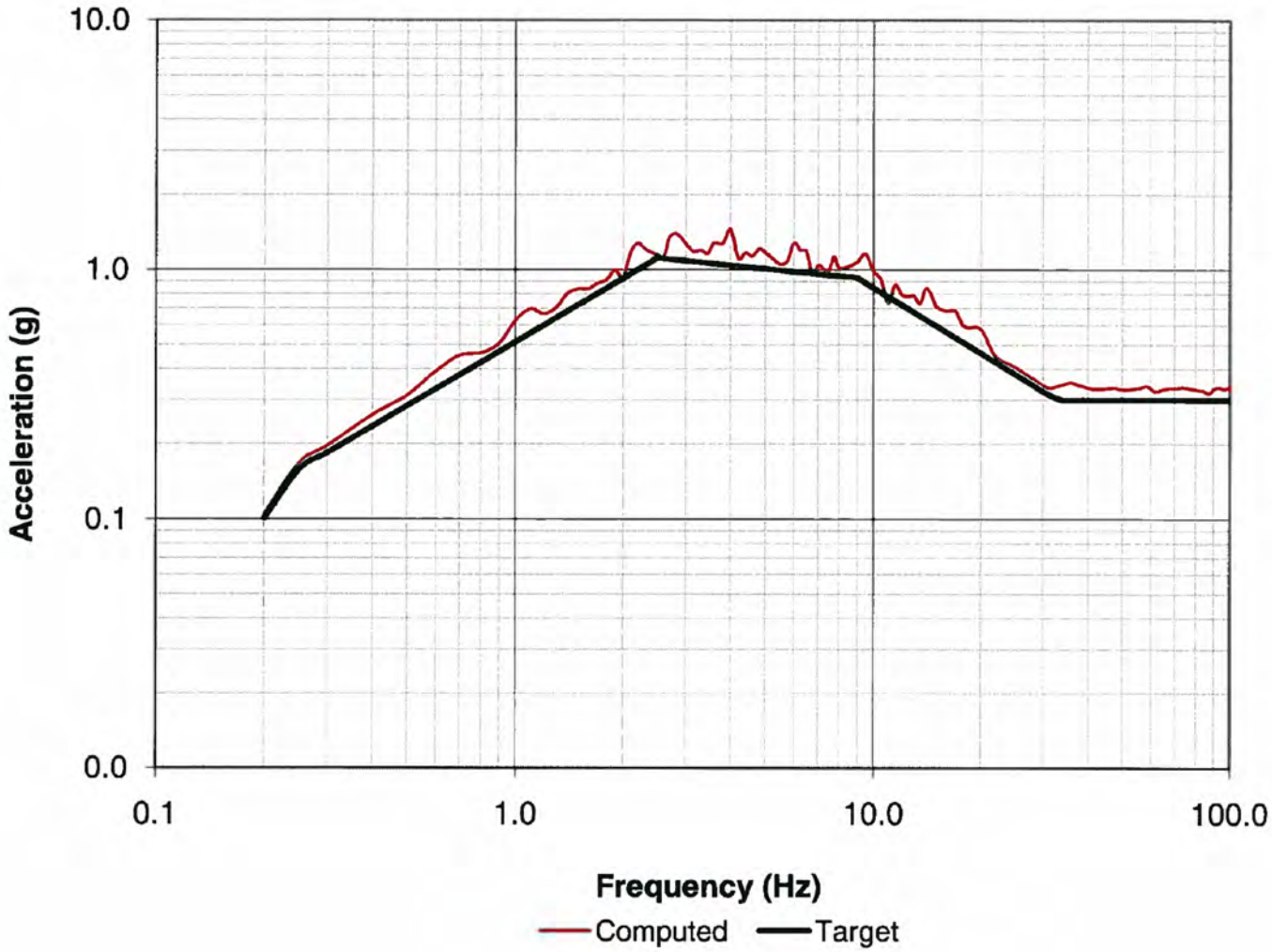

Figure 3H.8-5 Target vs. Computed Response Spectra, H1 Component, 3% damping

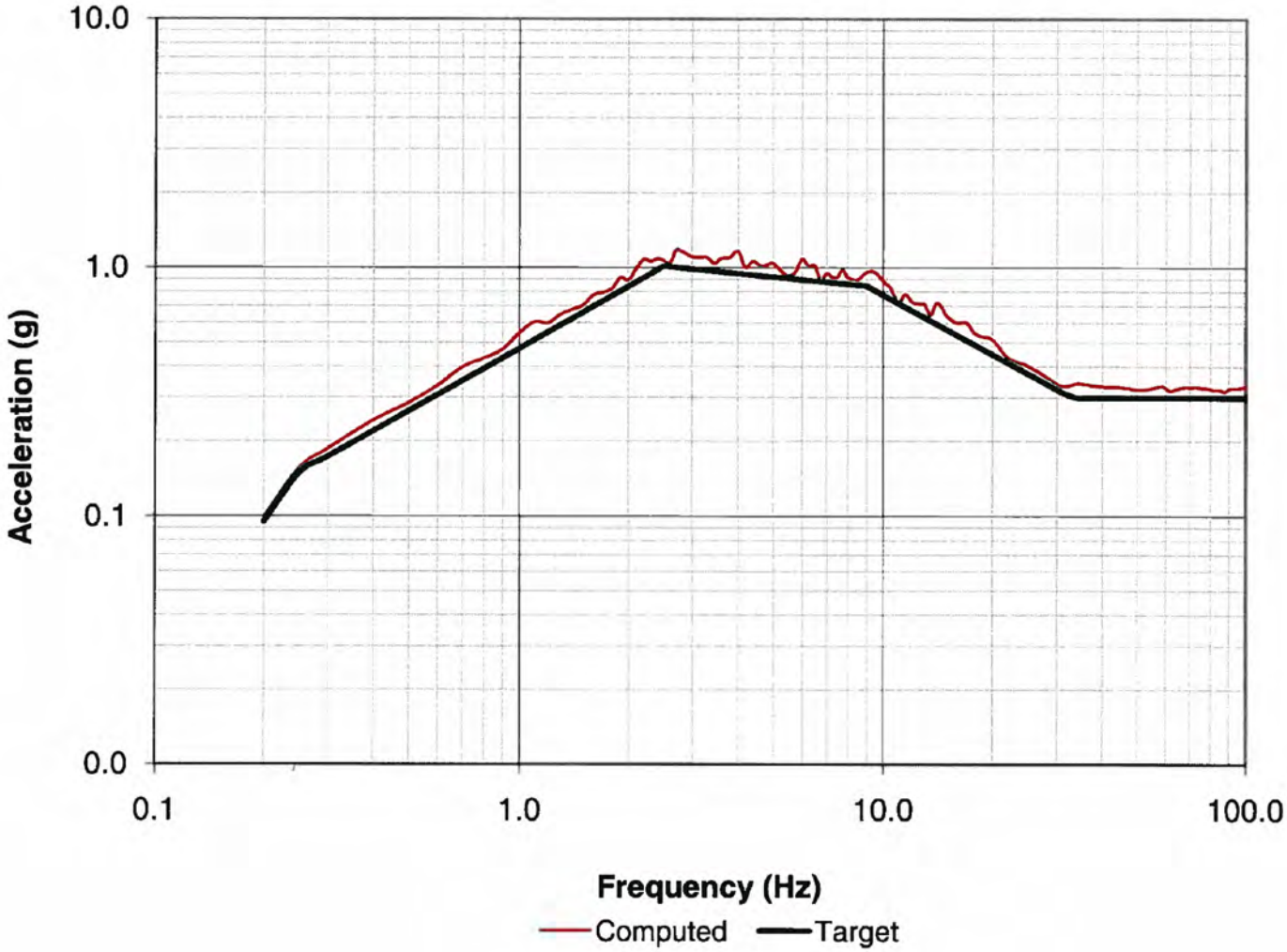

Figure 3H.8-6 Target vs. Computed Response Spectra, H1 Component, 4% damping

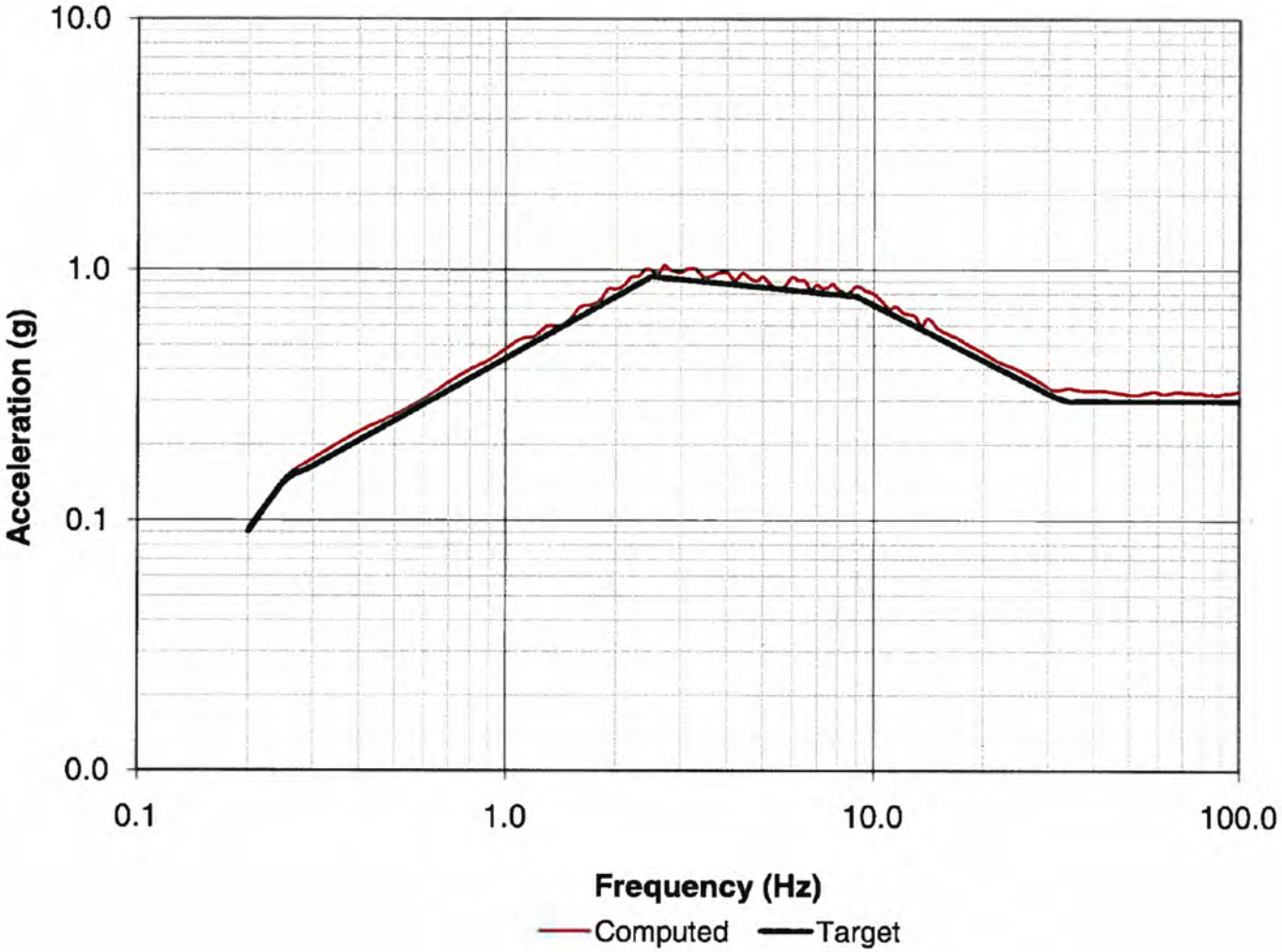

Figure 3H.8-7 Target vs. Computed Response Spectra, H1 Component, 5% damping

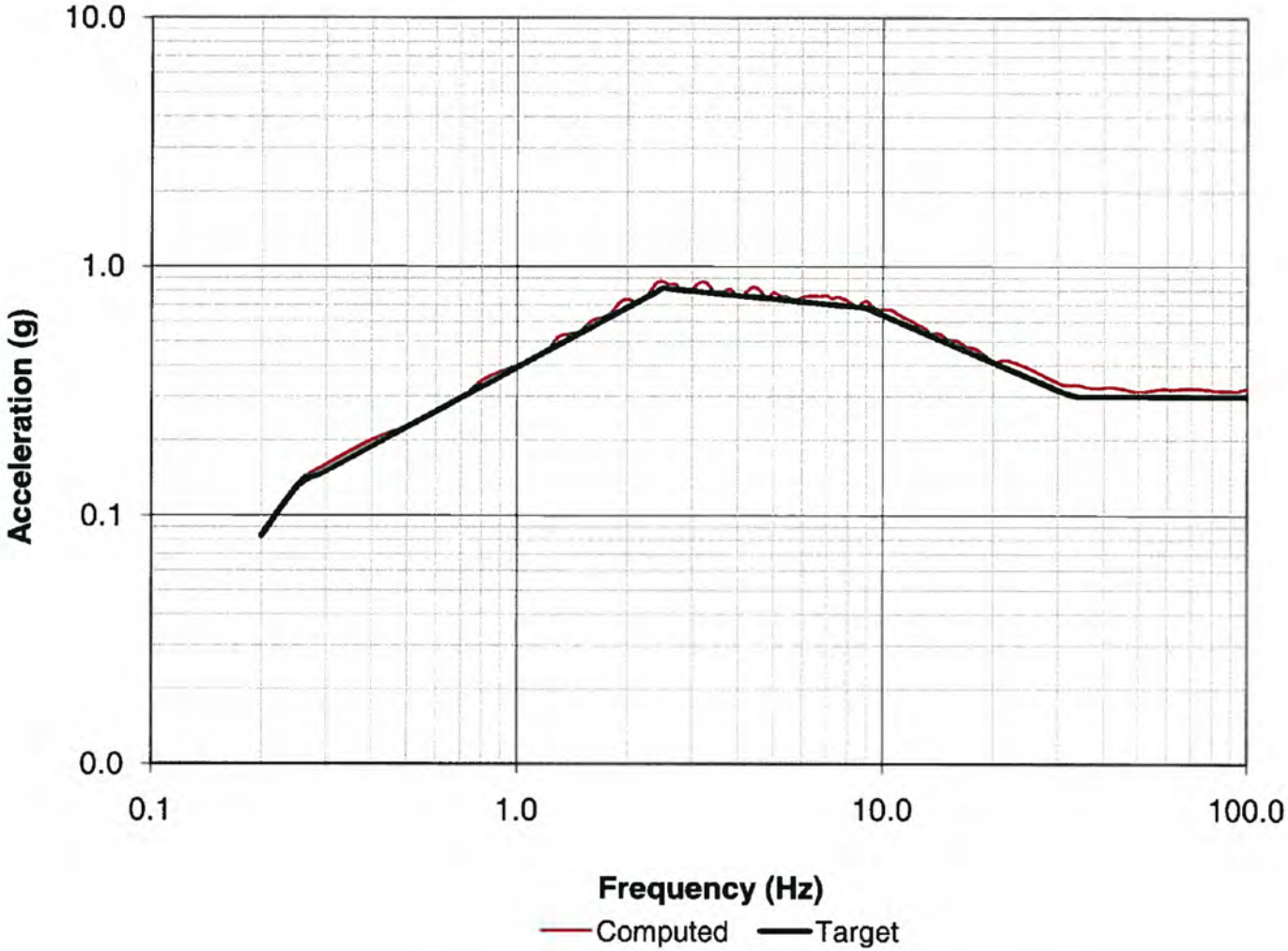

Figure 3H.8-8 Target vs. Computed Response Spectra, H1 Component, 7% damping

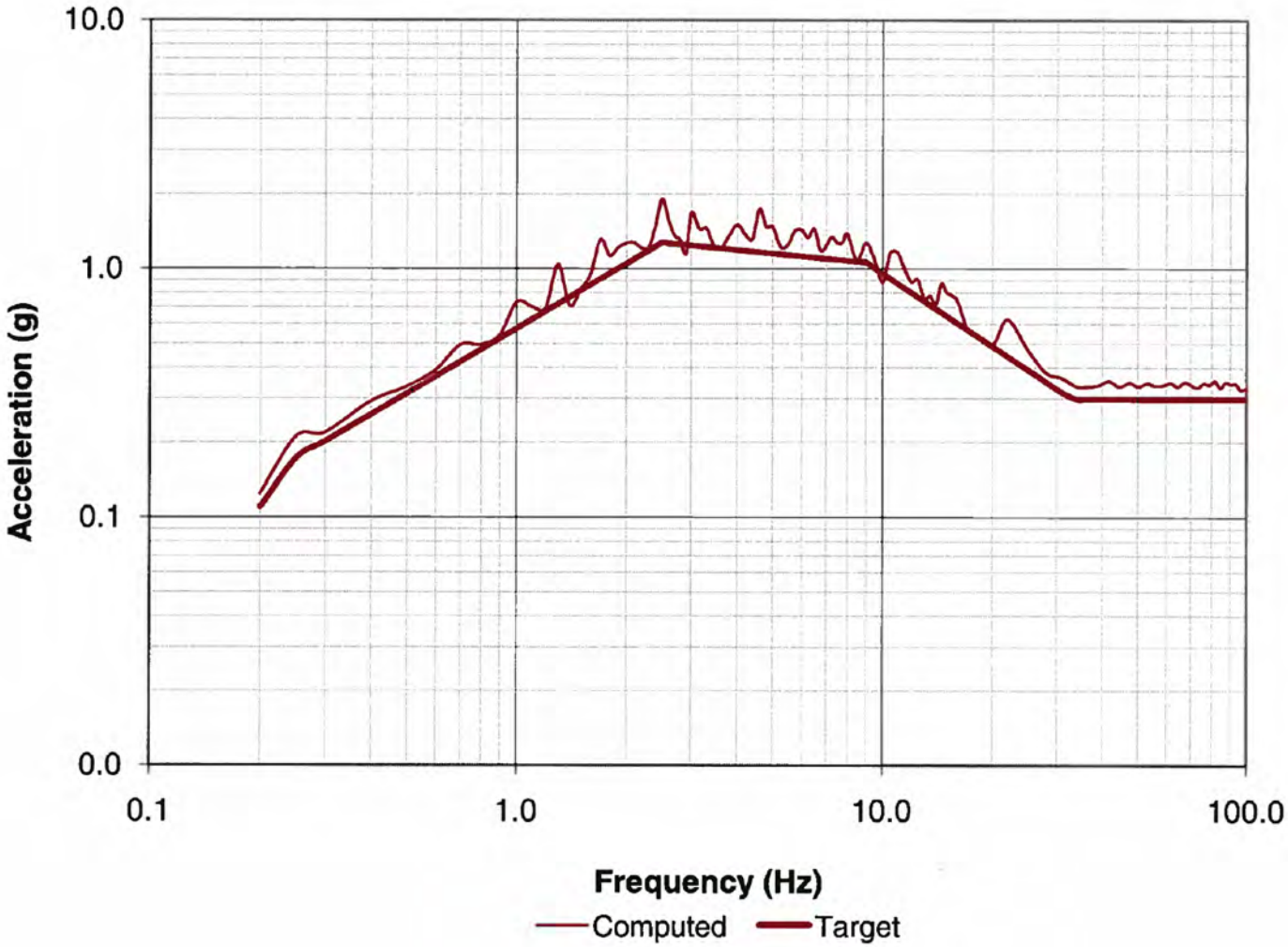

Figure 3H.8-9 Target vs. Computed Response Spectra, H2 Component, 2% Damping

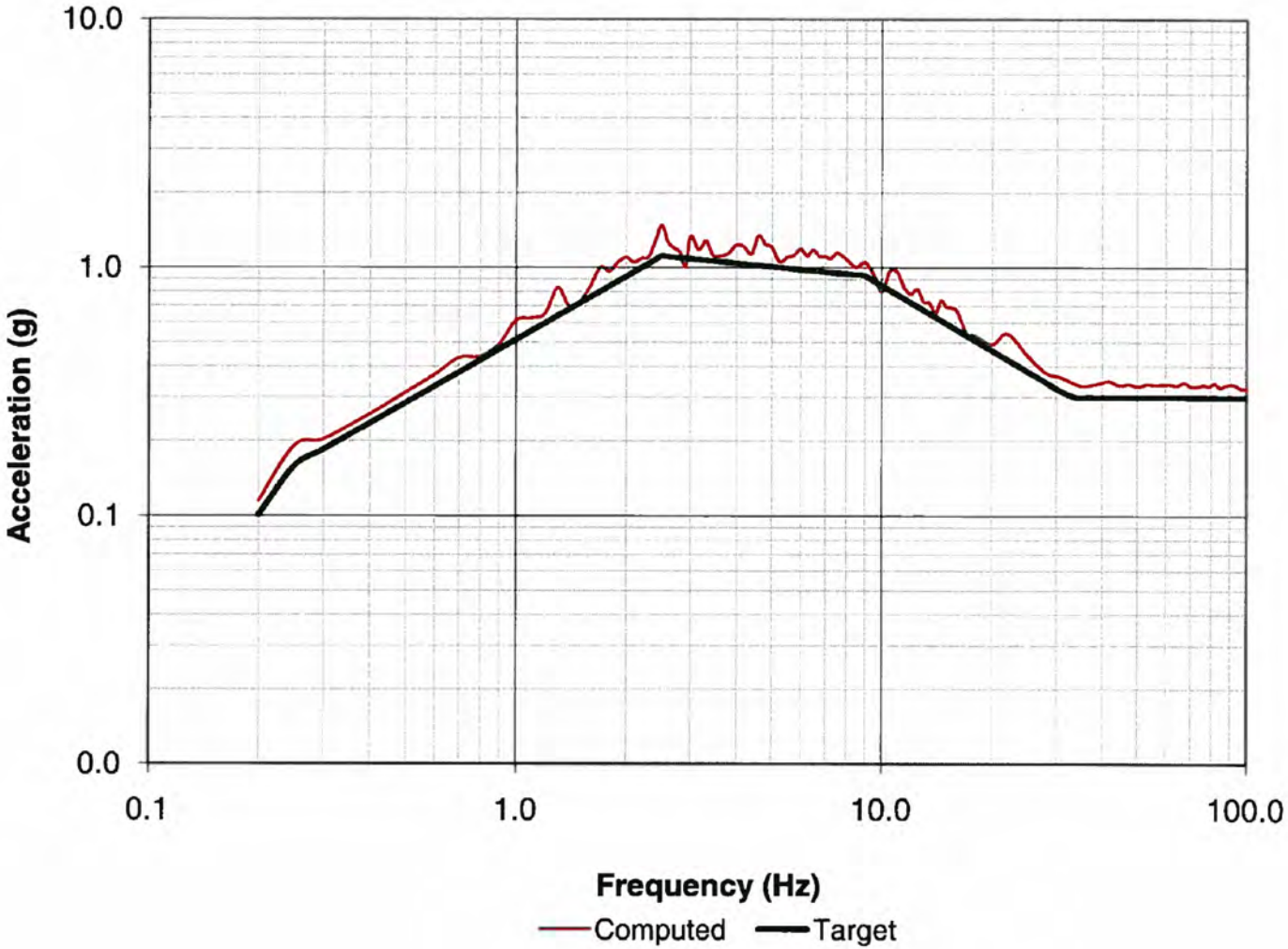

Figure 3H.8-10 Target vs. Computed Response Spectra, H2 Component, 3% Damping

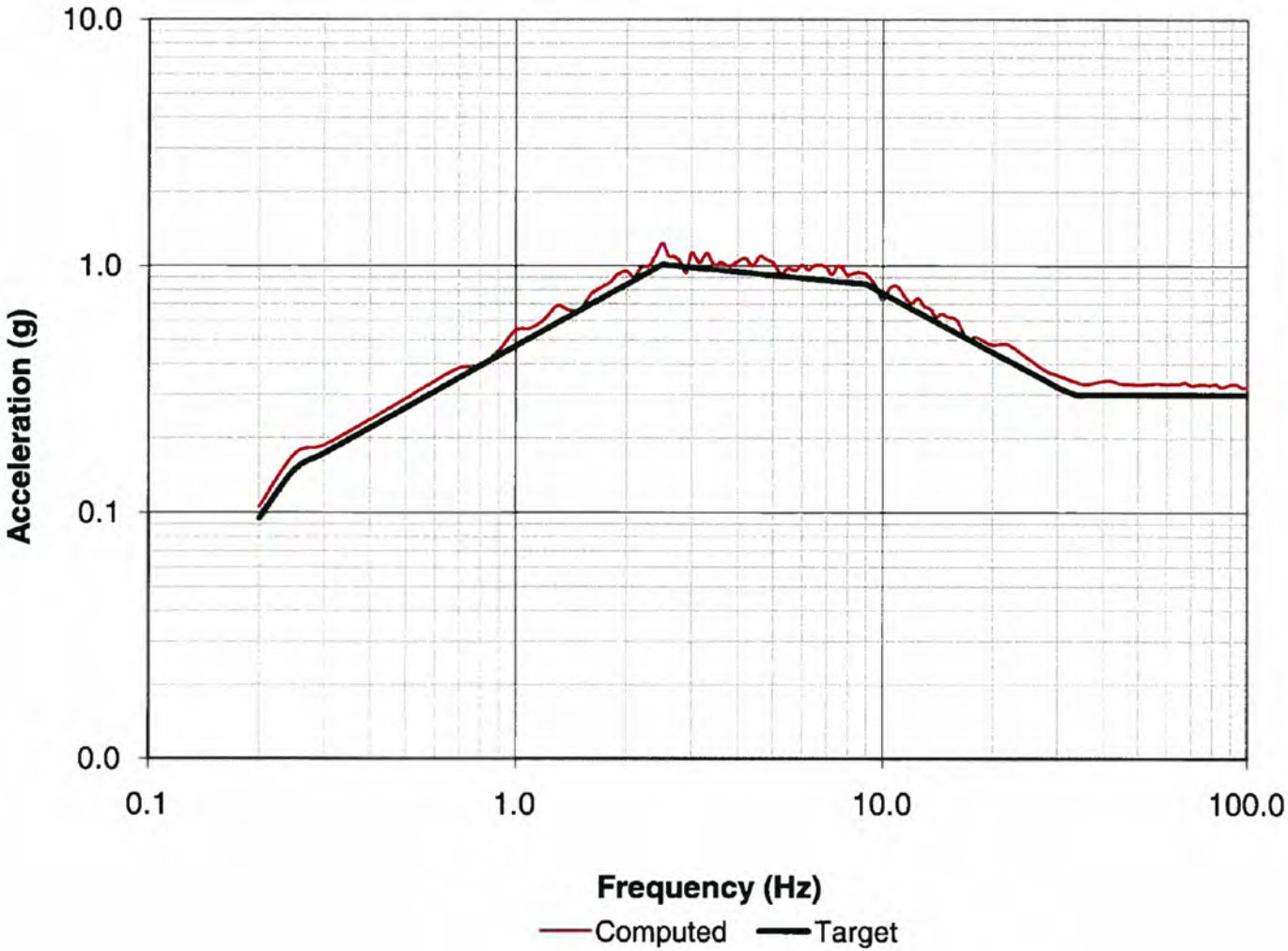

Figure 3H.8-11 Target vs. Computed Response Spectra, H2 Component, 4% Damping

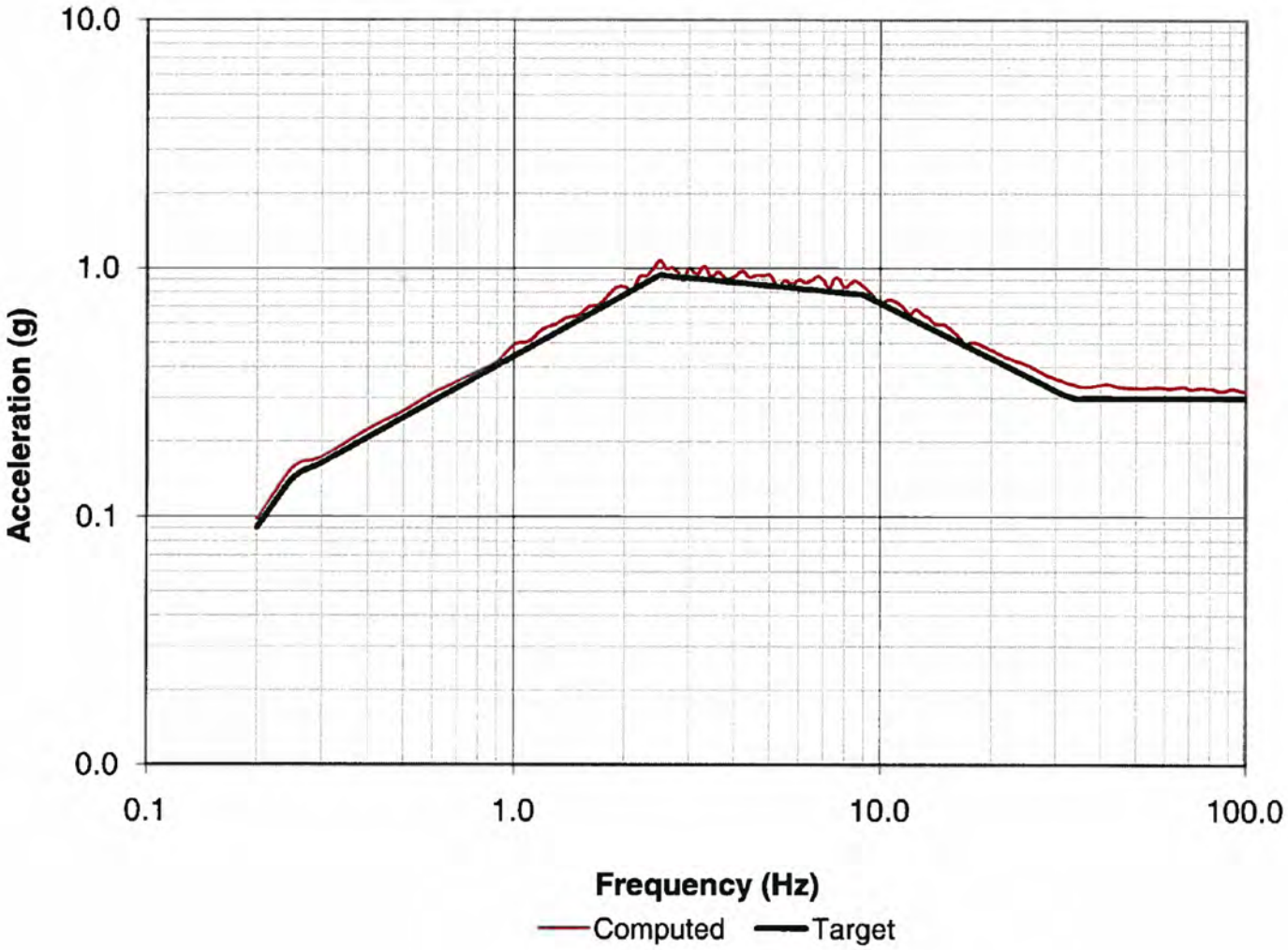

Figure 3H.8-12 Target vs. Computed Response Spectra, H2 Component, 5% Damping

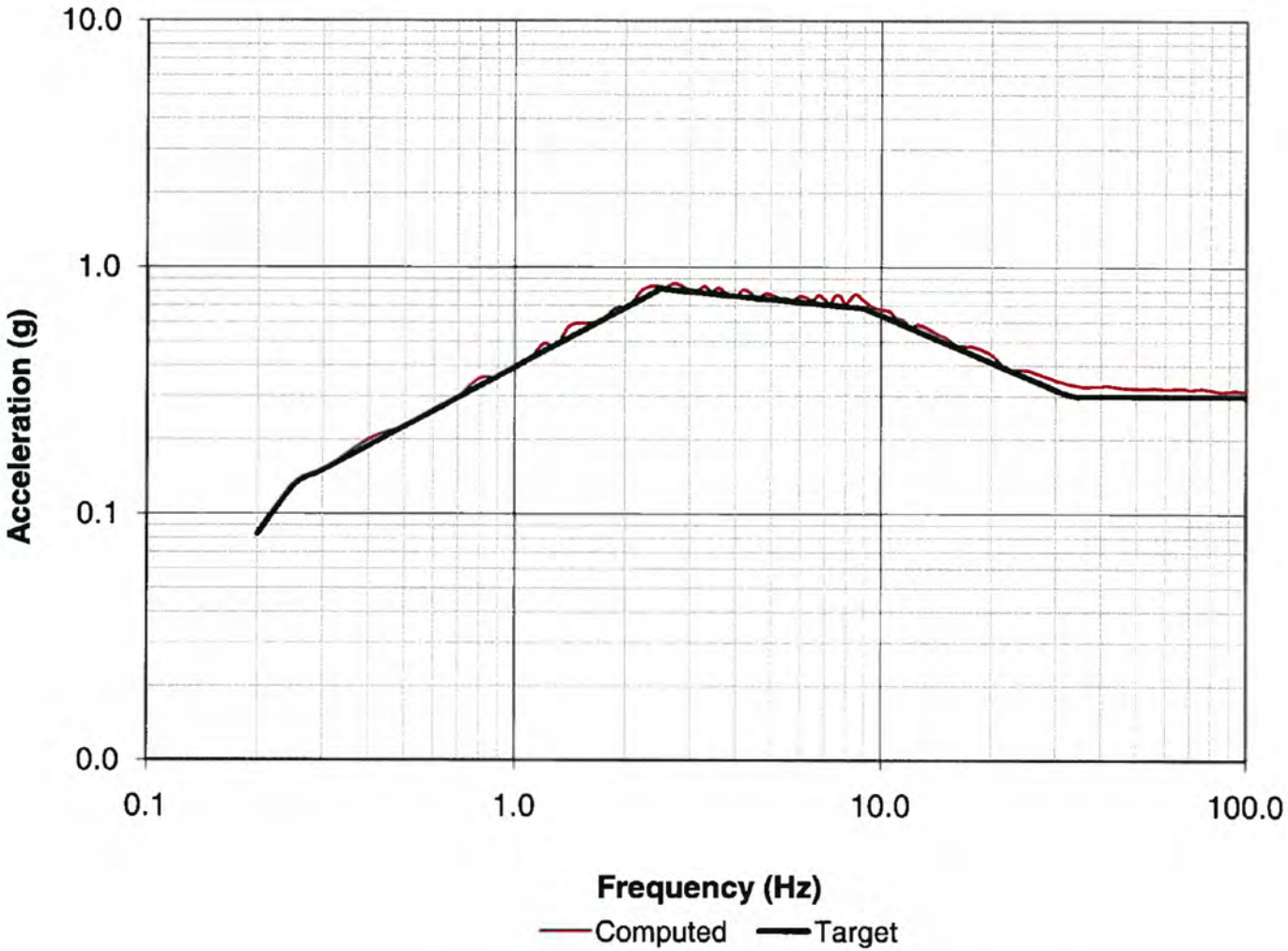

Figure 3H.8-13 Target vs. Computed Response Spectra, H2 Component, 7% Damping

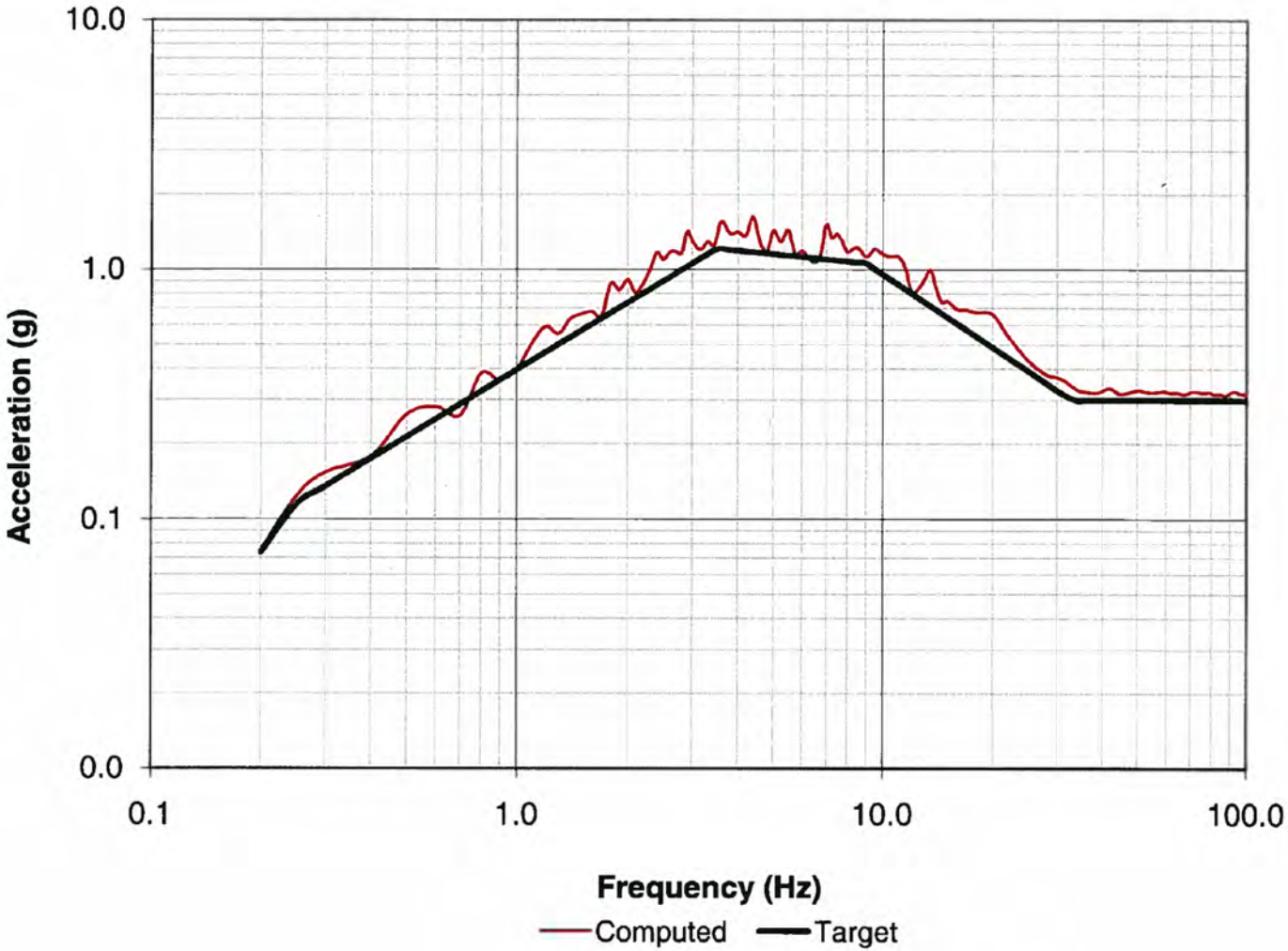

Figure 3H.8-14 Target vs. Computed Response Spectra, V1 Component, 2% Damping

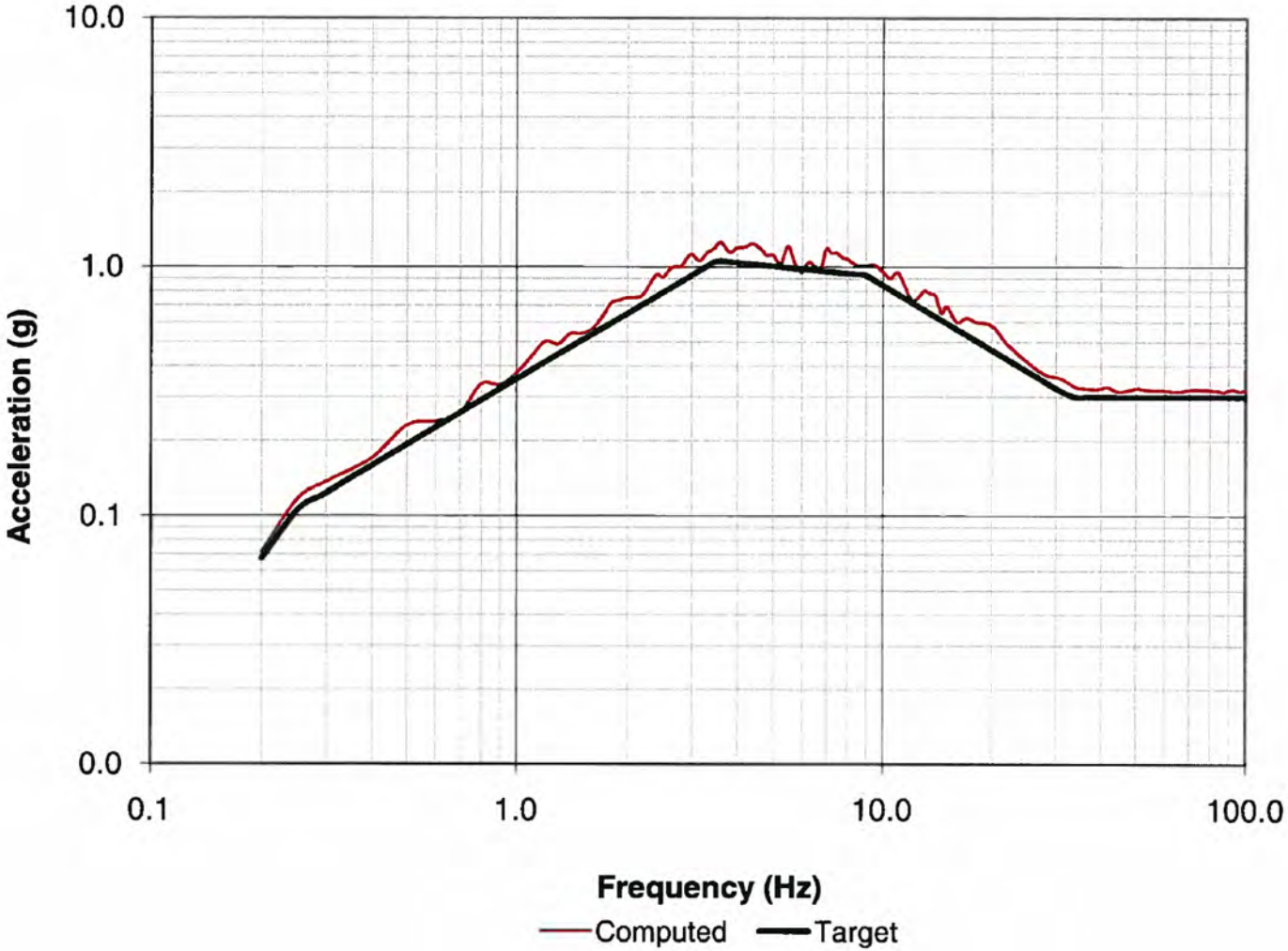

Figure 3H.8-15 Target vs. Computed Response Spectra, V1 Component, 3% Damping

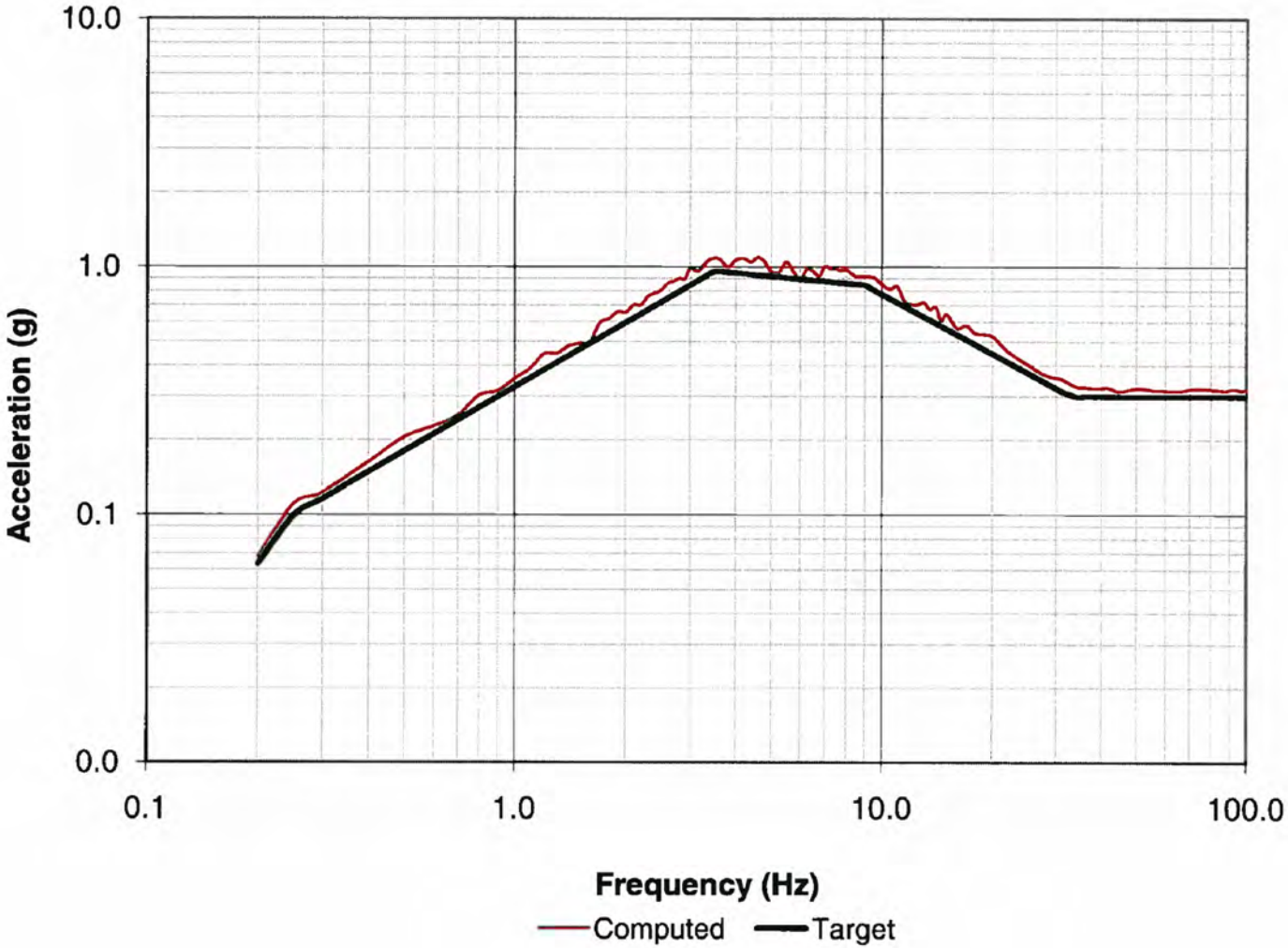

Figure 3H.8-16 Target vs. Computed Response Spectra, V1 Component, 4% Damping

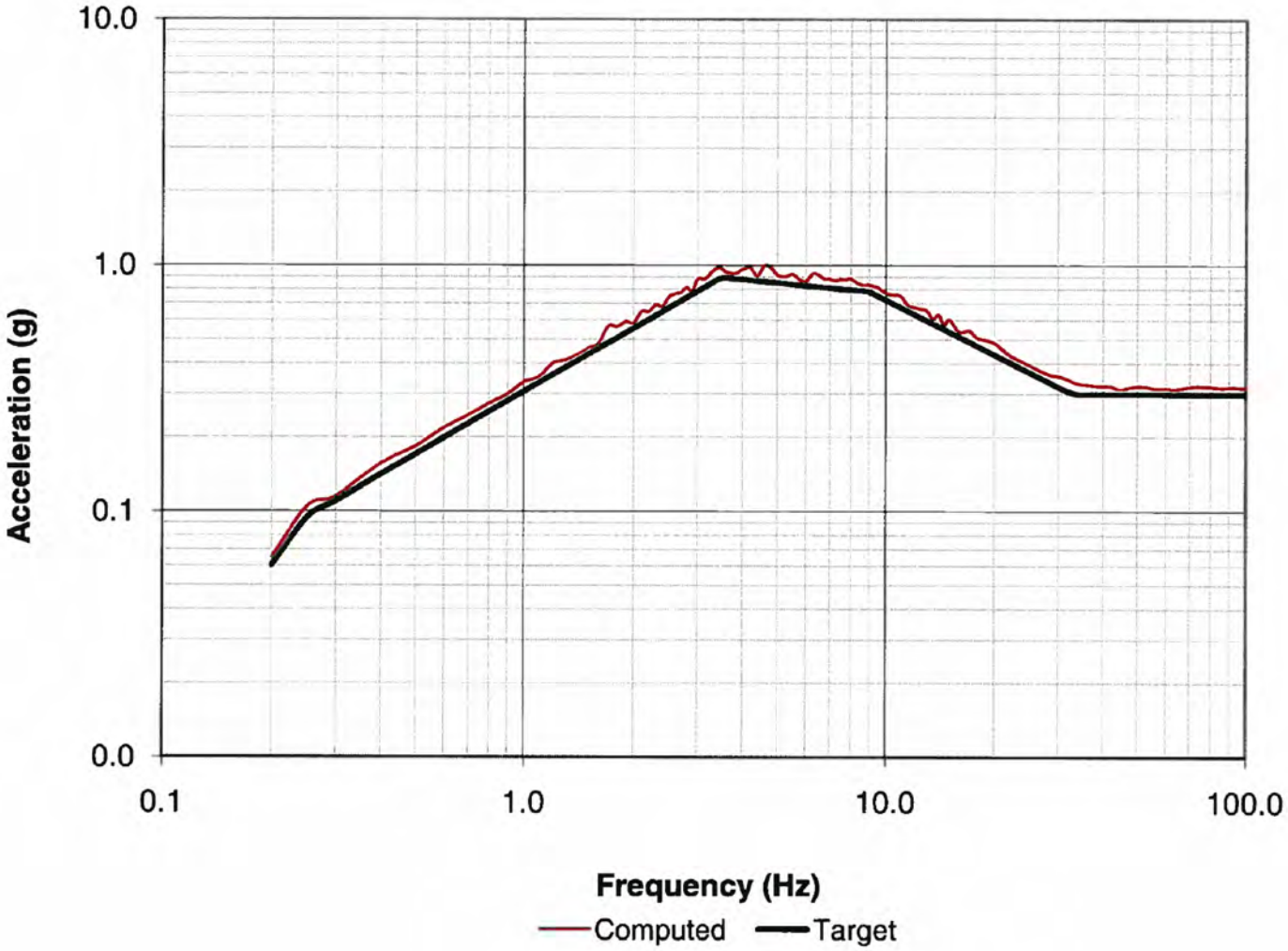

Figure 3H.8-17 Target vs. Computed Response Spectra, V1 Component, 5% Damping

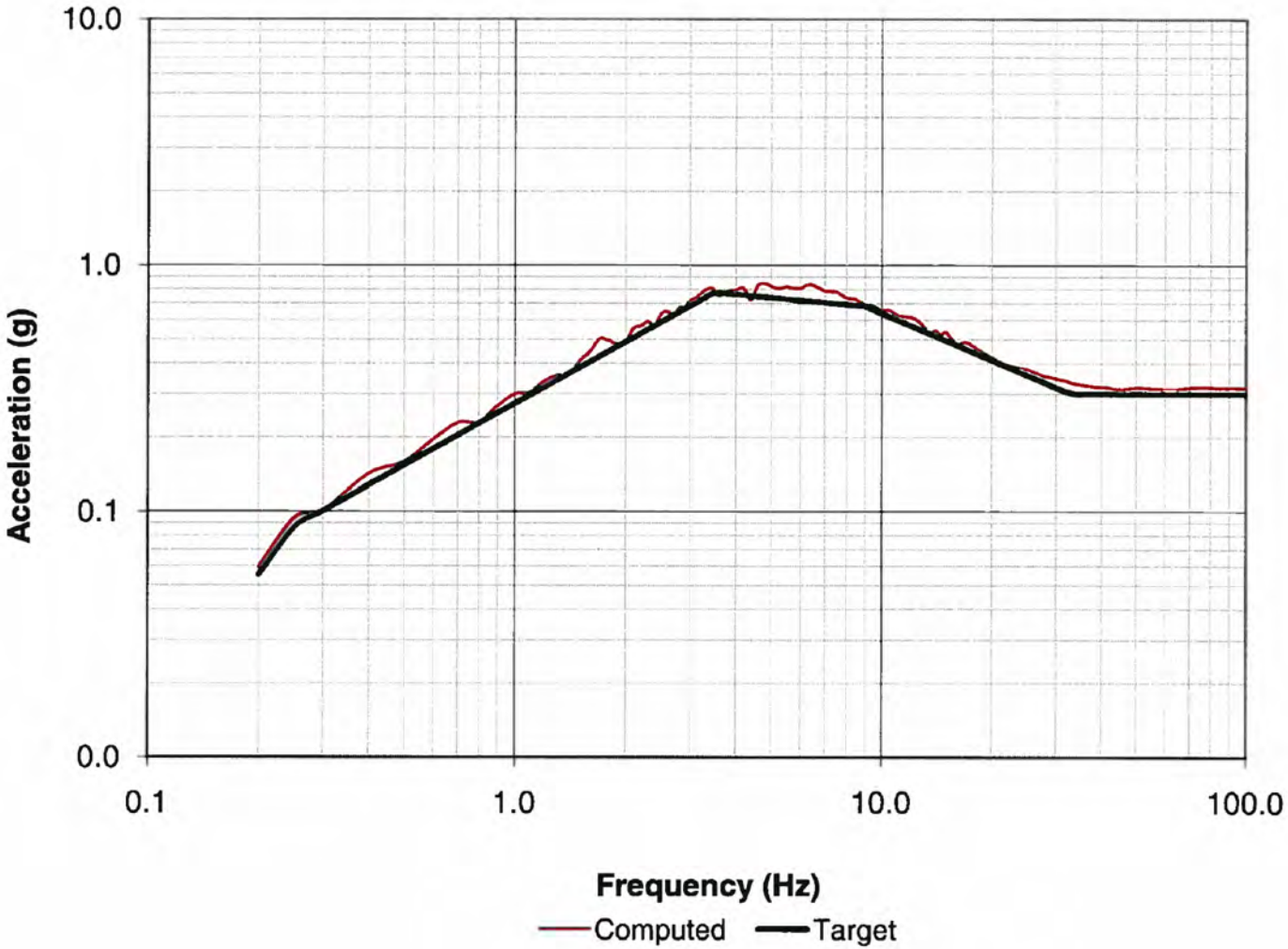

Figure 3H.8-18 Target vs. Computed Response Spectra, V1 Component, 7% Damping

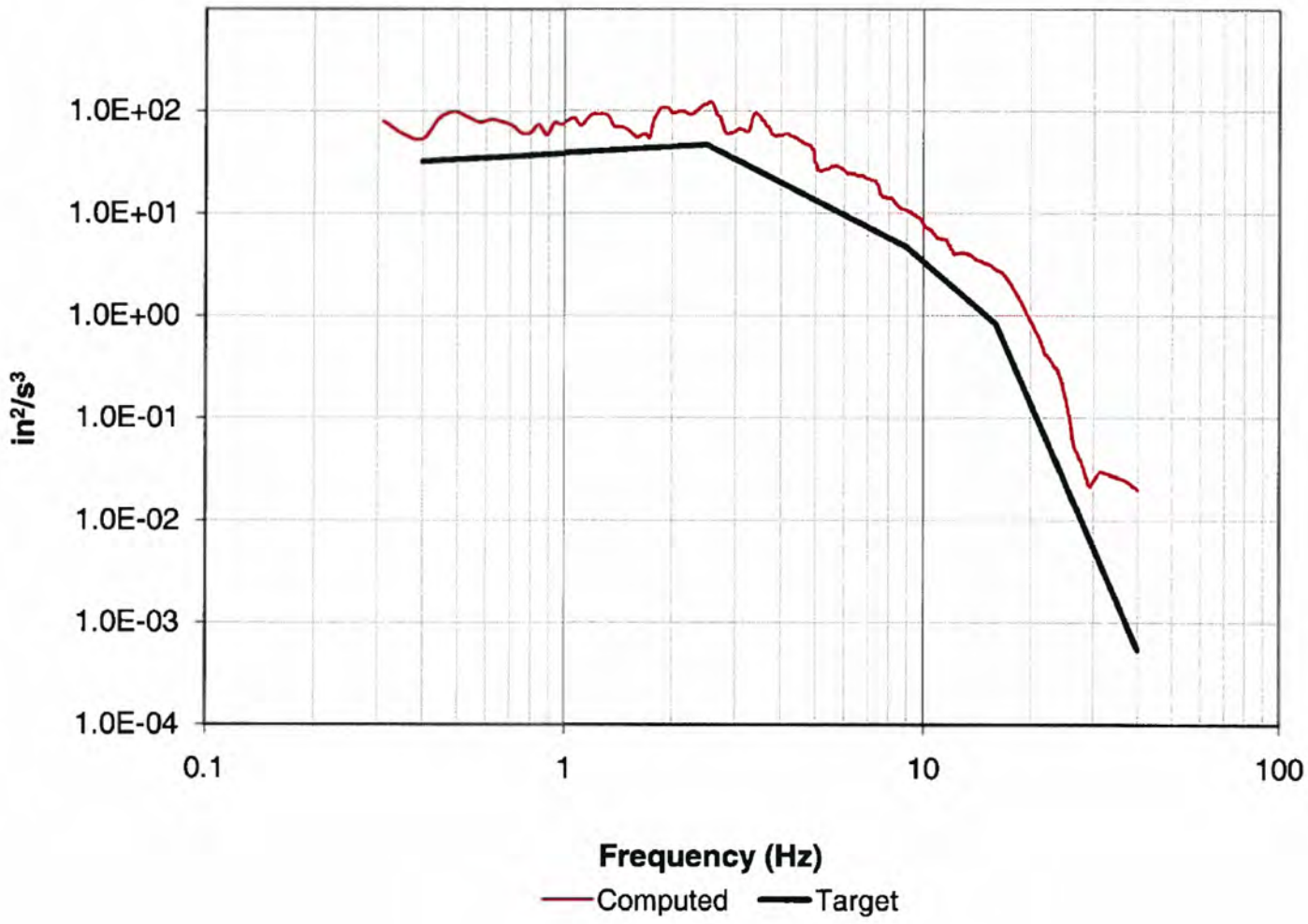

Figure 3H.8-19 Target vs. Computed Power Spectral Density, Horizontal H1 Component

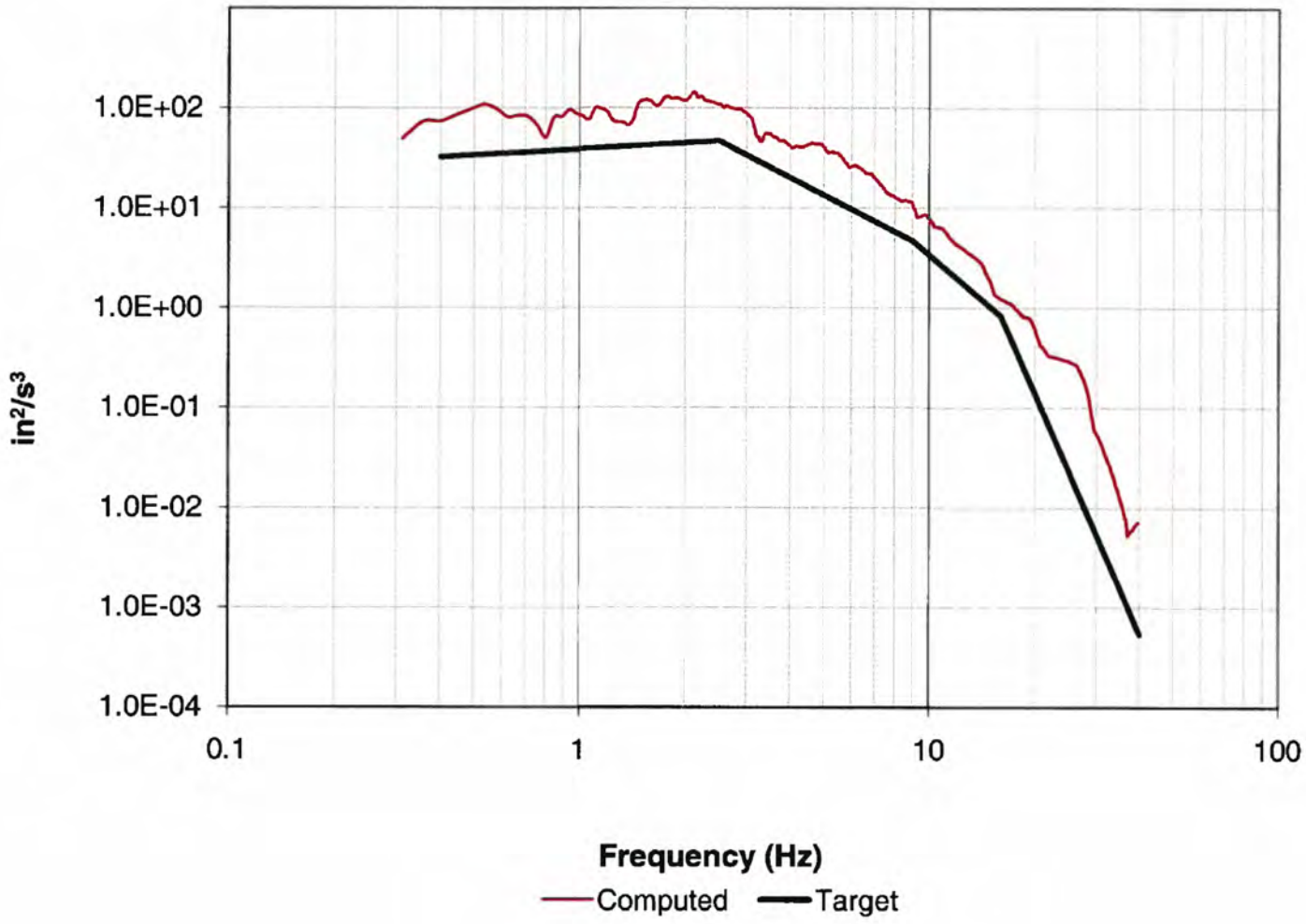

Figure 3H.8-20 Target vs. Computed Power Spectral Density, Horizontal H2 Component

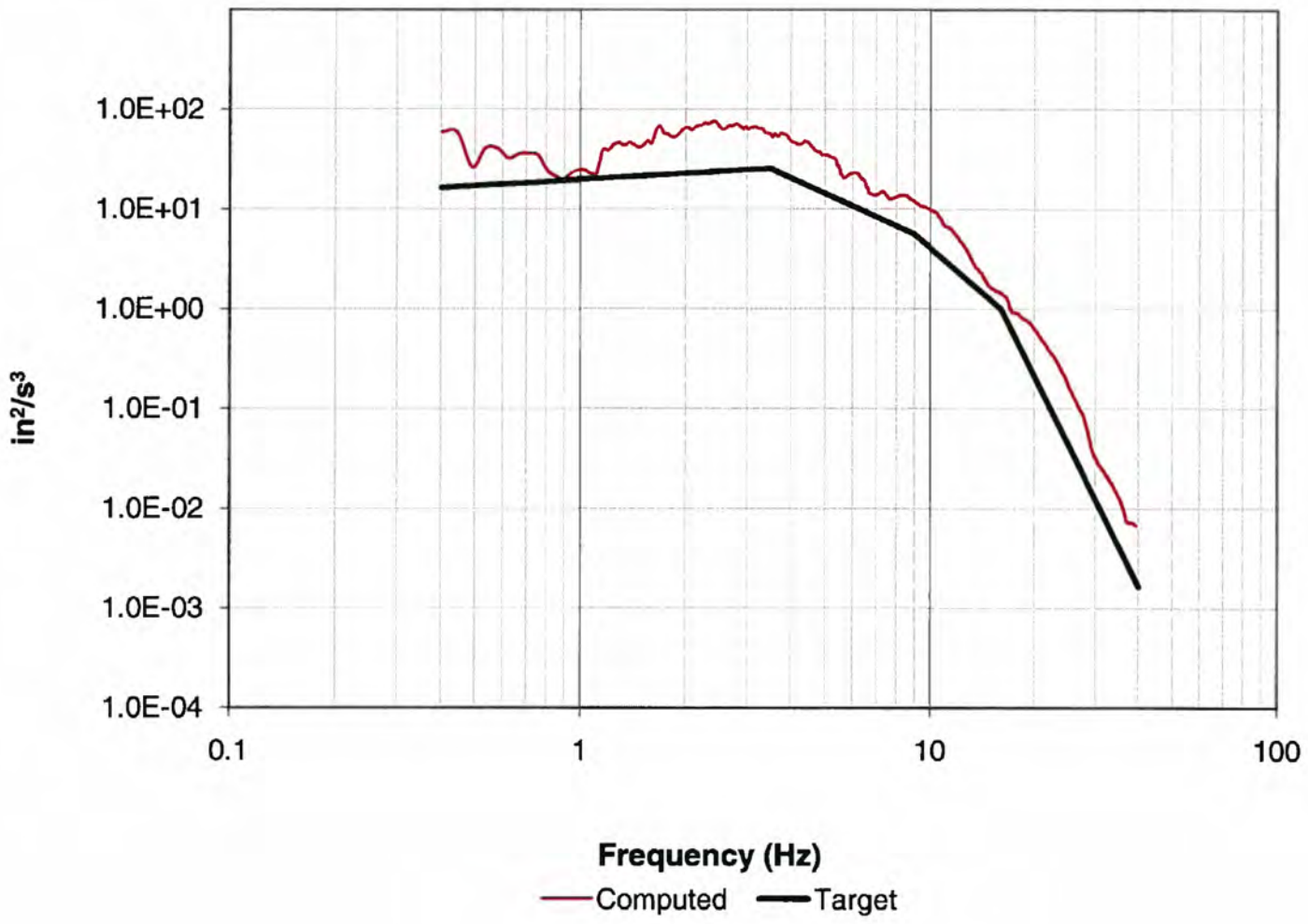

Figure 3H.8-21 Target vs. Computed Power Spectral Density, Vertical V1 Component

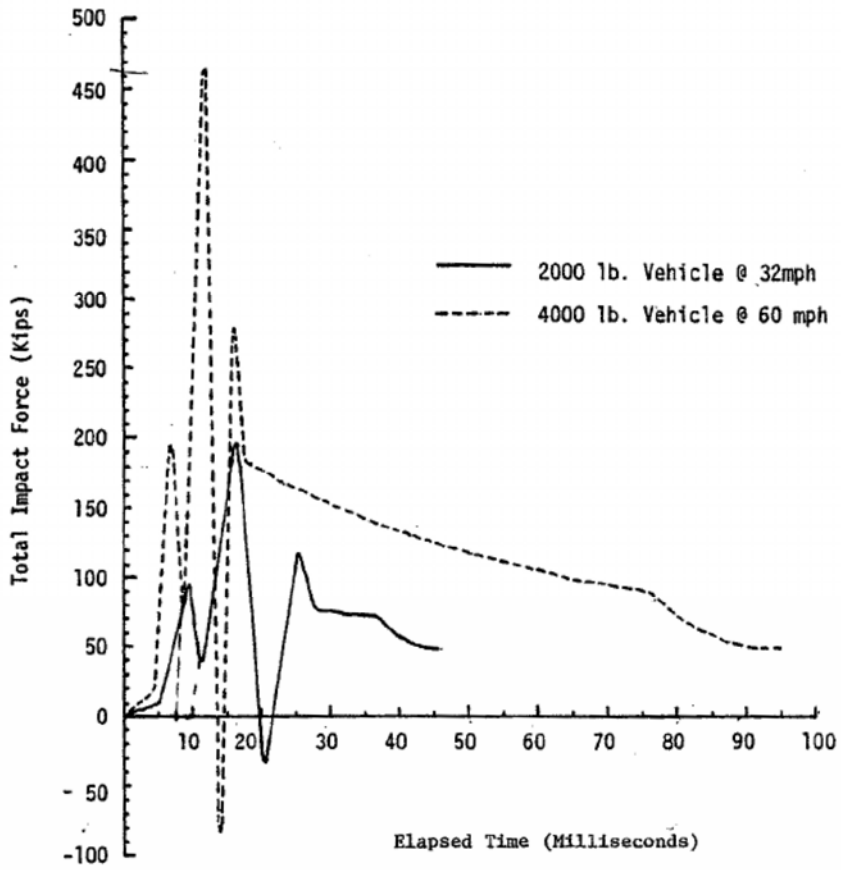

Figure 3H.11-1 Automobile Missile Impact Forcing Function

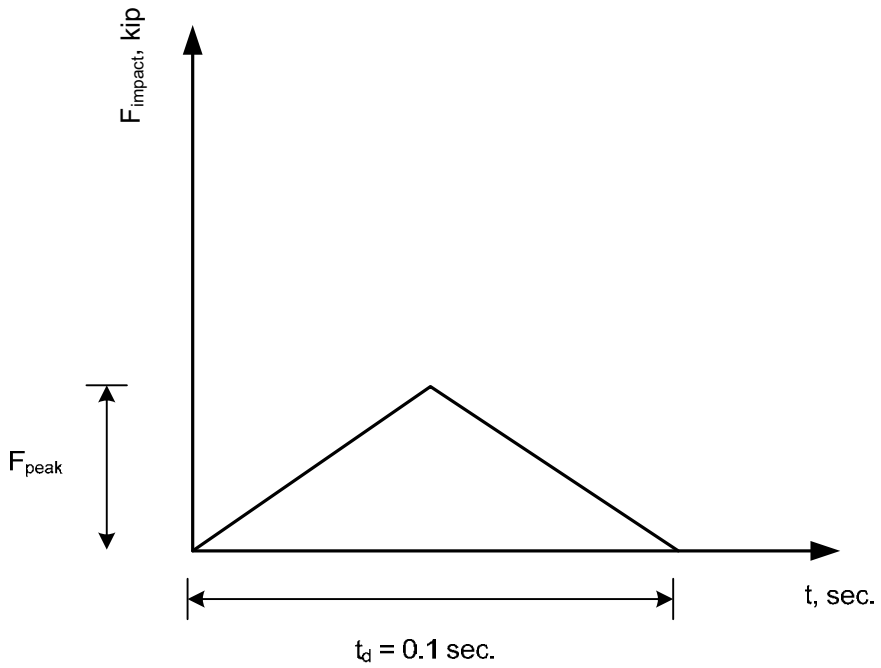

Figure 3H.11-2 Idealized Impact Force Time History for Automobile Missile

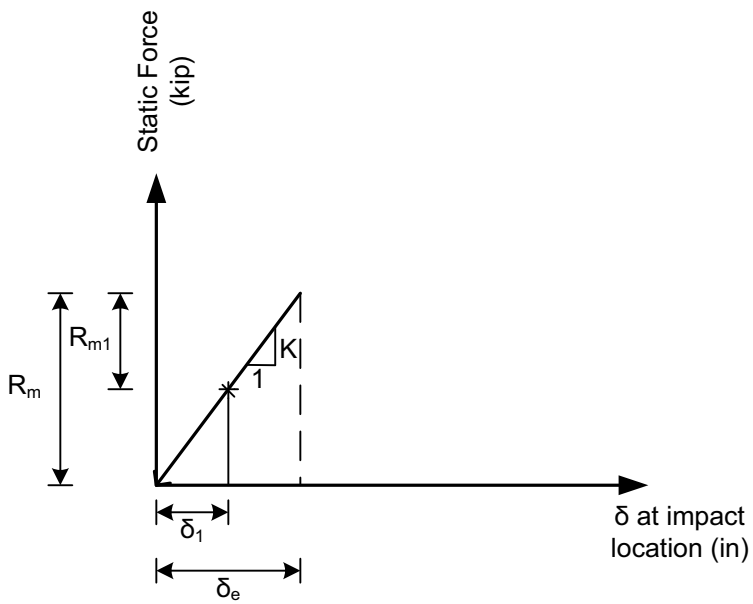

(a) – Response is in Elastic Range

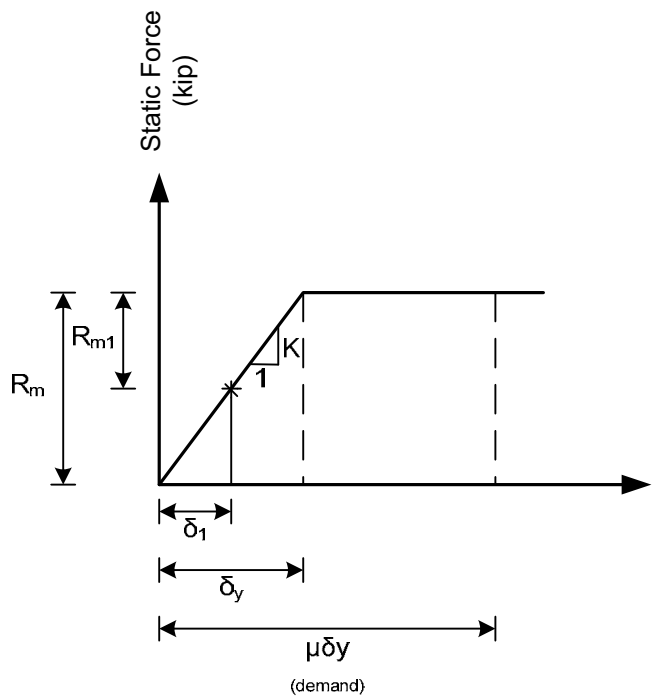

(b) – Response Extends into Plastic Range

Figure 3H.11-3 Idealized Load-Deflection Diagrams

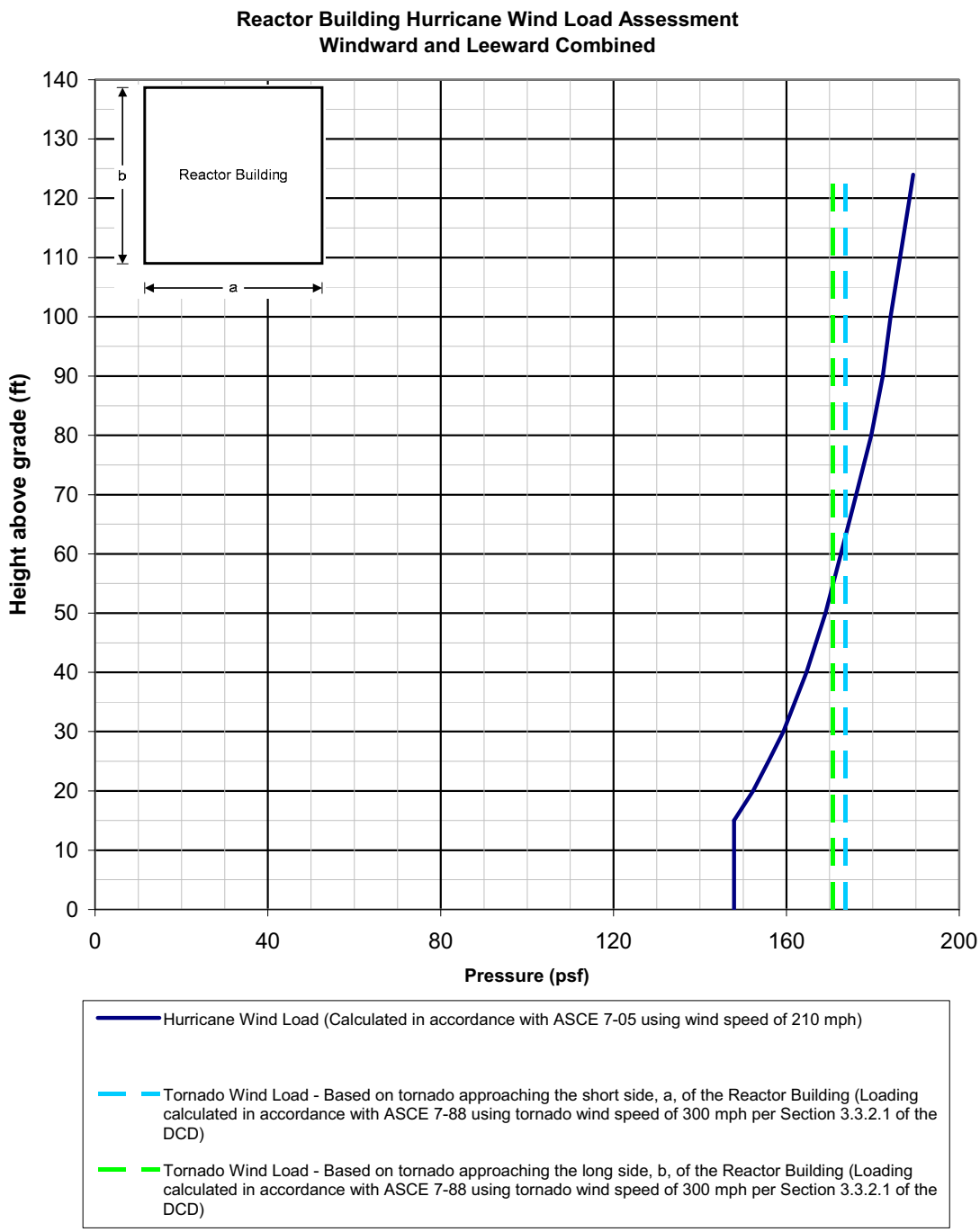

Figure 3H.11-4 Comparison of Hurricane and Tornado Wind Pressures for Reactor Building

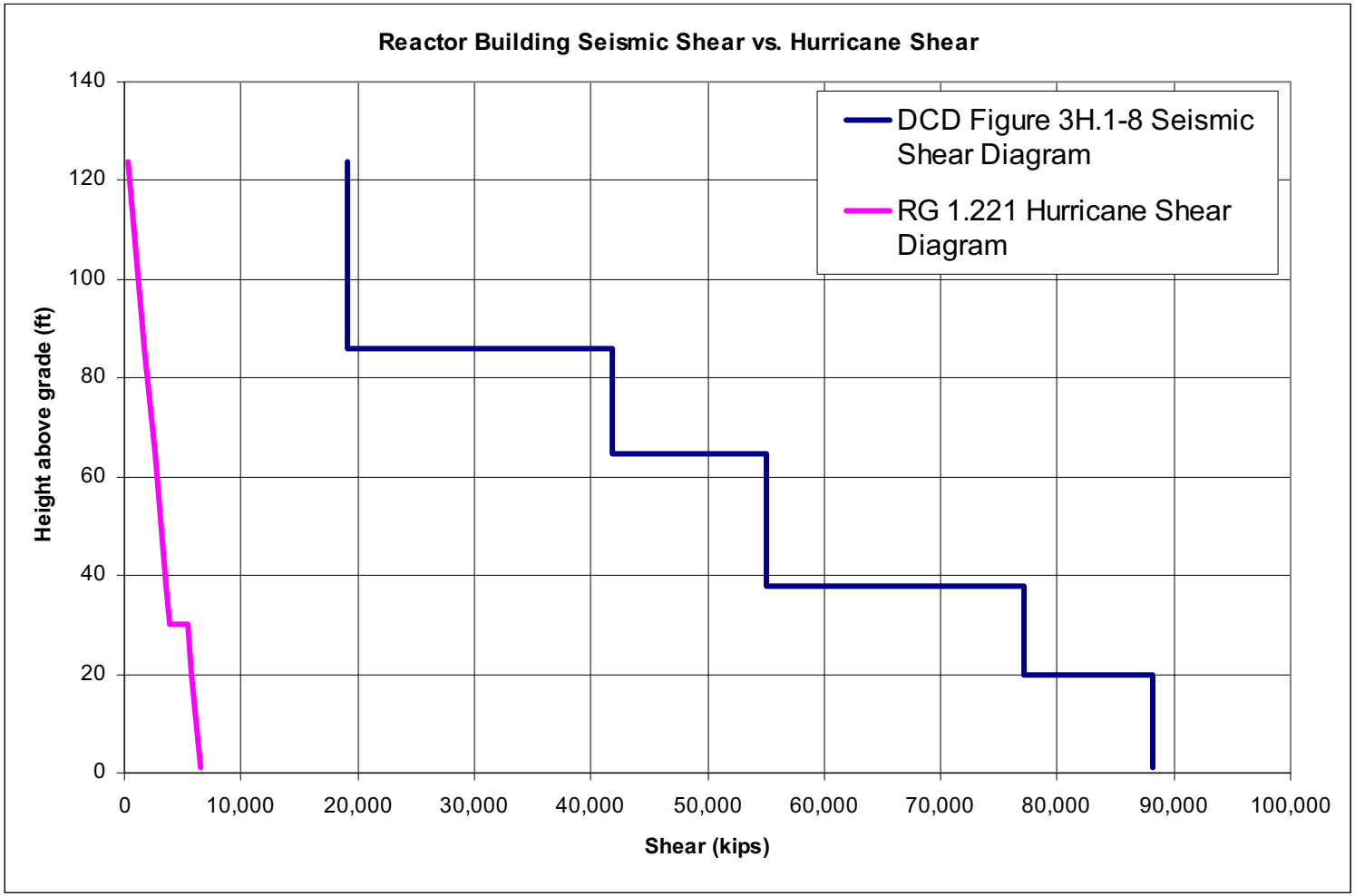

Figure 3H.11-5 Comparison of Hurricane and Seismic Shear Forces for Reactor Building

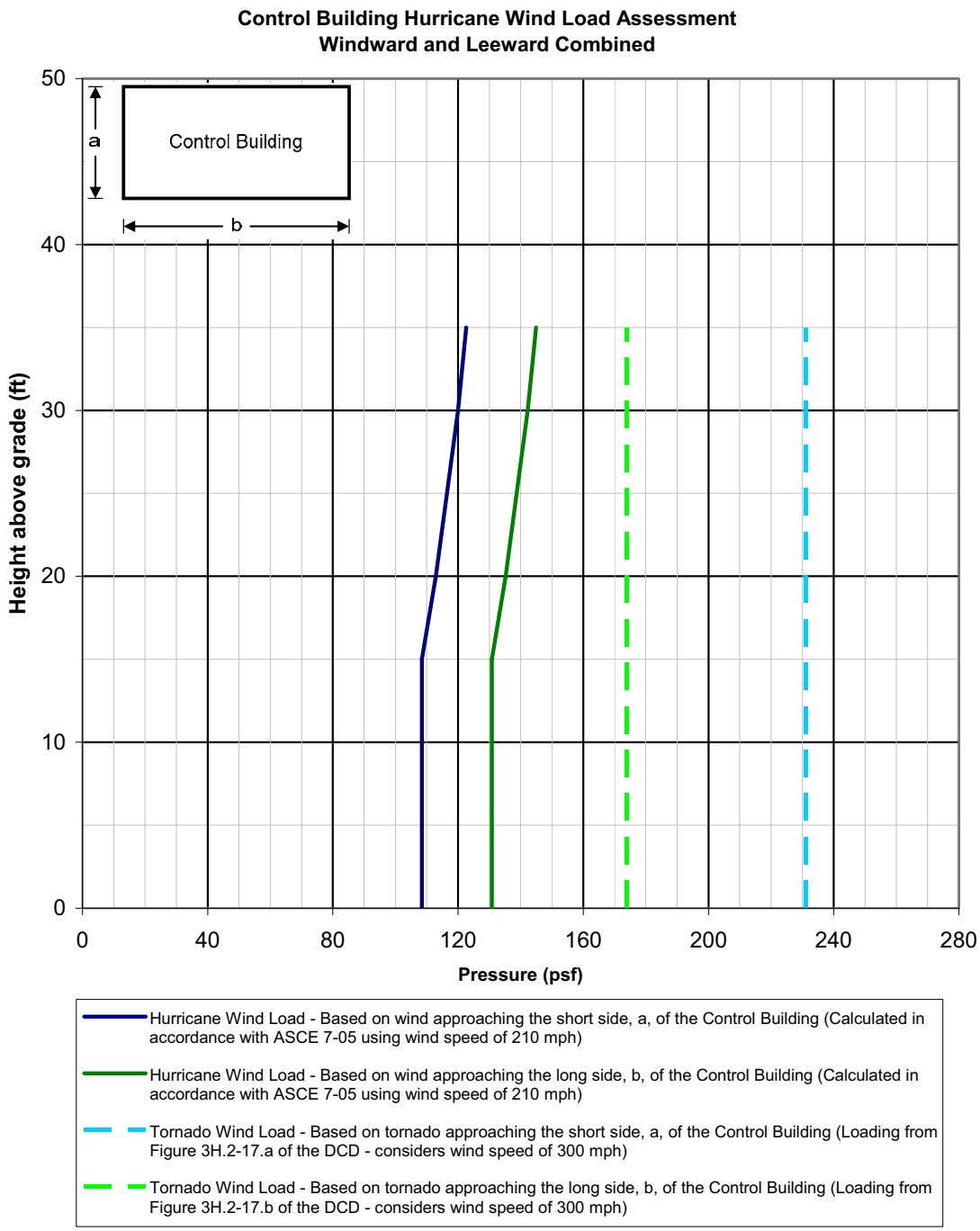

Figure 3H.11-6 Comparison of Hurricane and Tornado Wind Pressures for Control Building

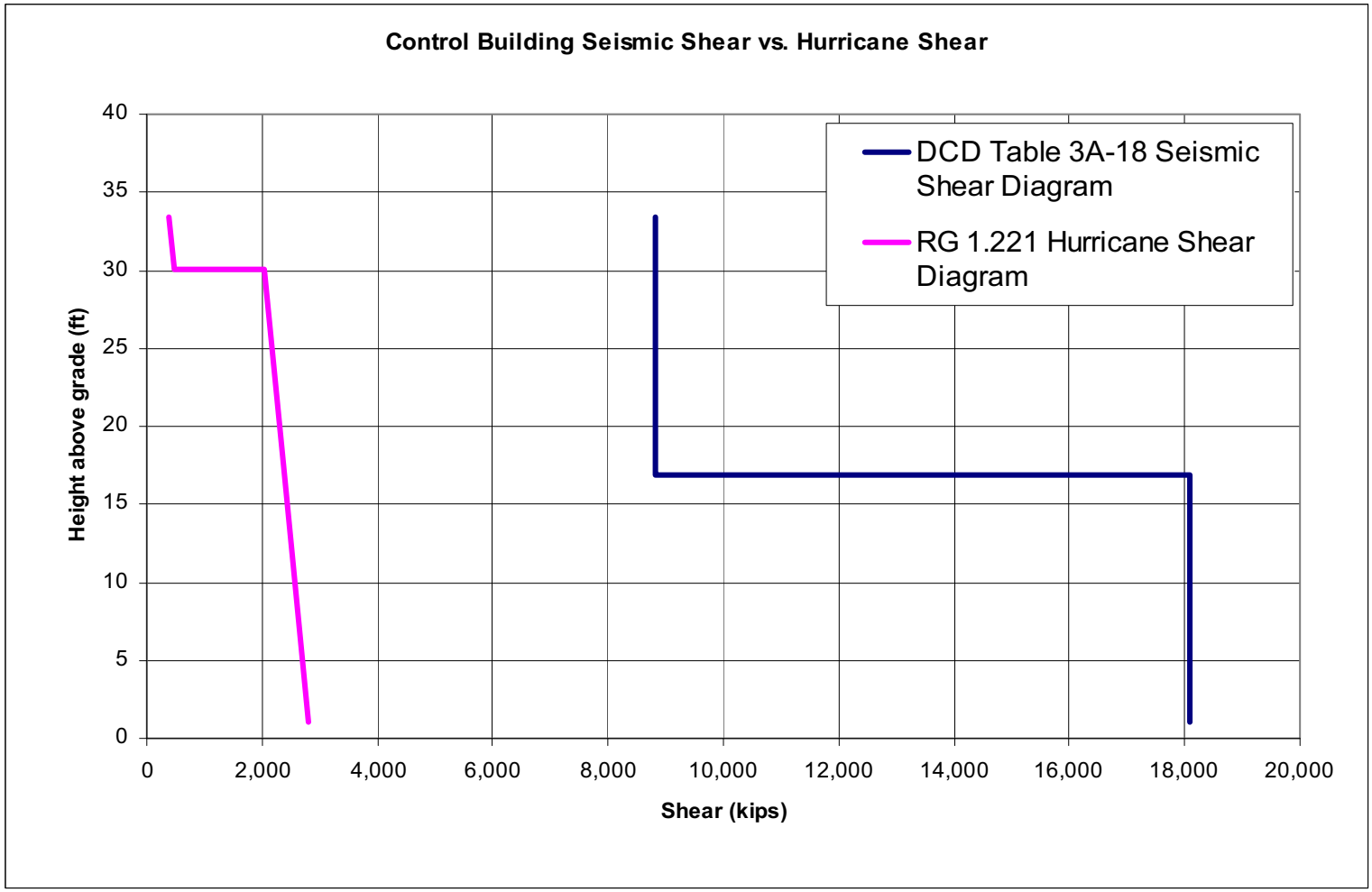

Figure 3H.11-7 Comparison of Hurricane and Seismic Shear Forces for Control Building

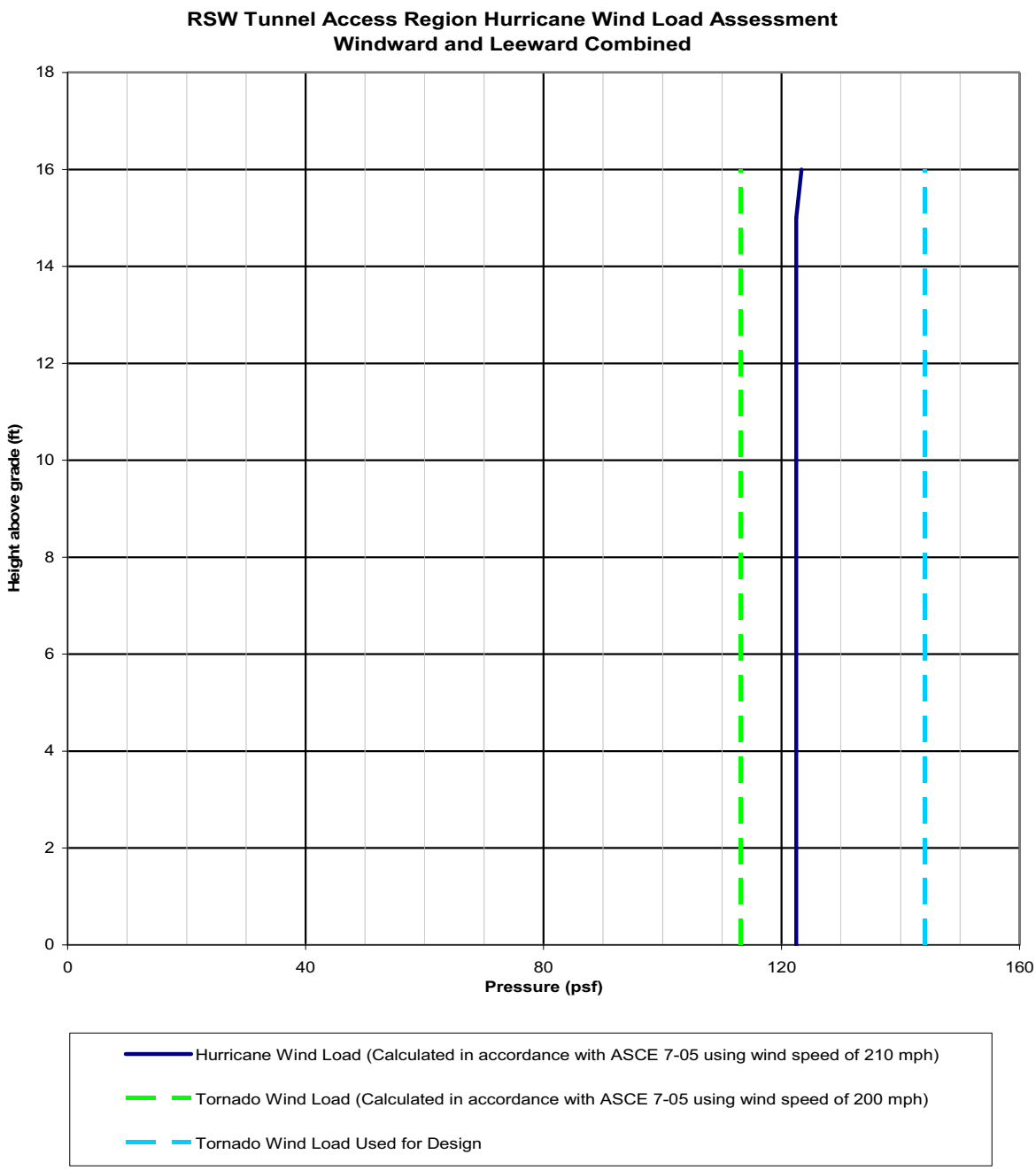

Figure 3H.11-8 Comparison of Hurricane and Tornado Wind Pressures for RSW Piping Tunnels

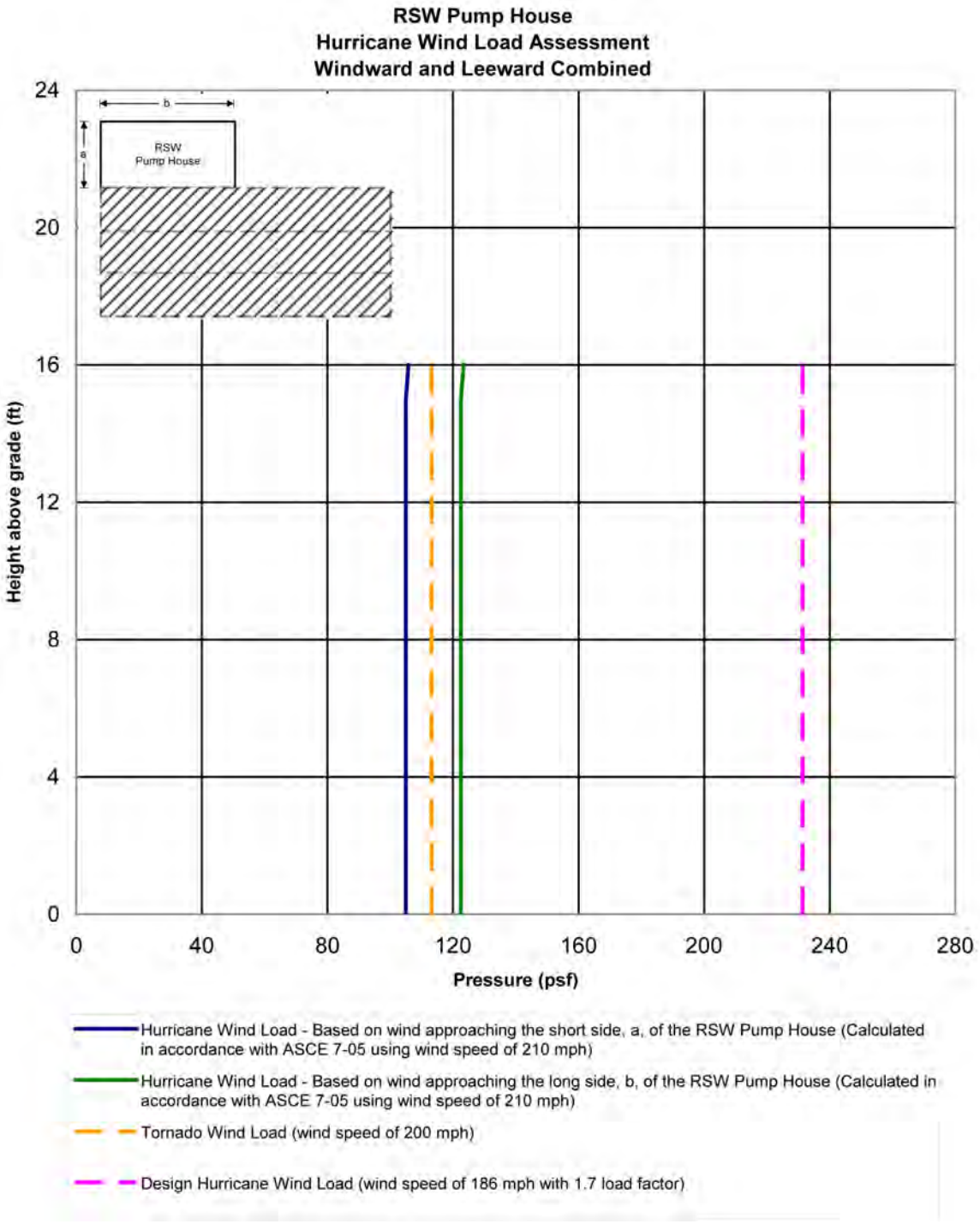

Figure 3H.11-9 Comparison of Hurricane and Tornado Wind Pressures for RSW Pump House

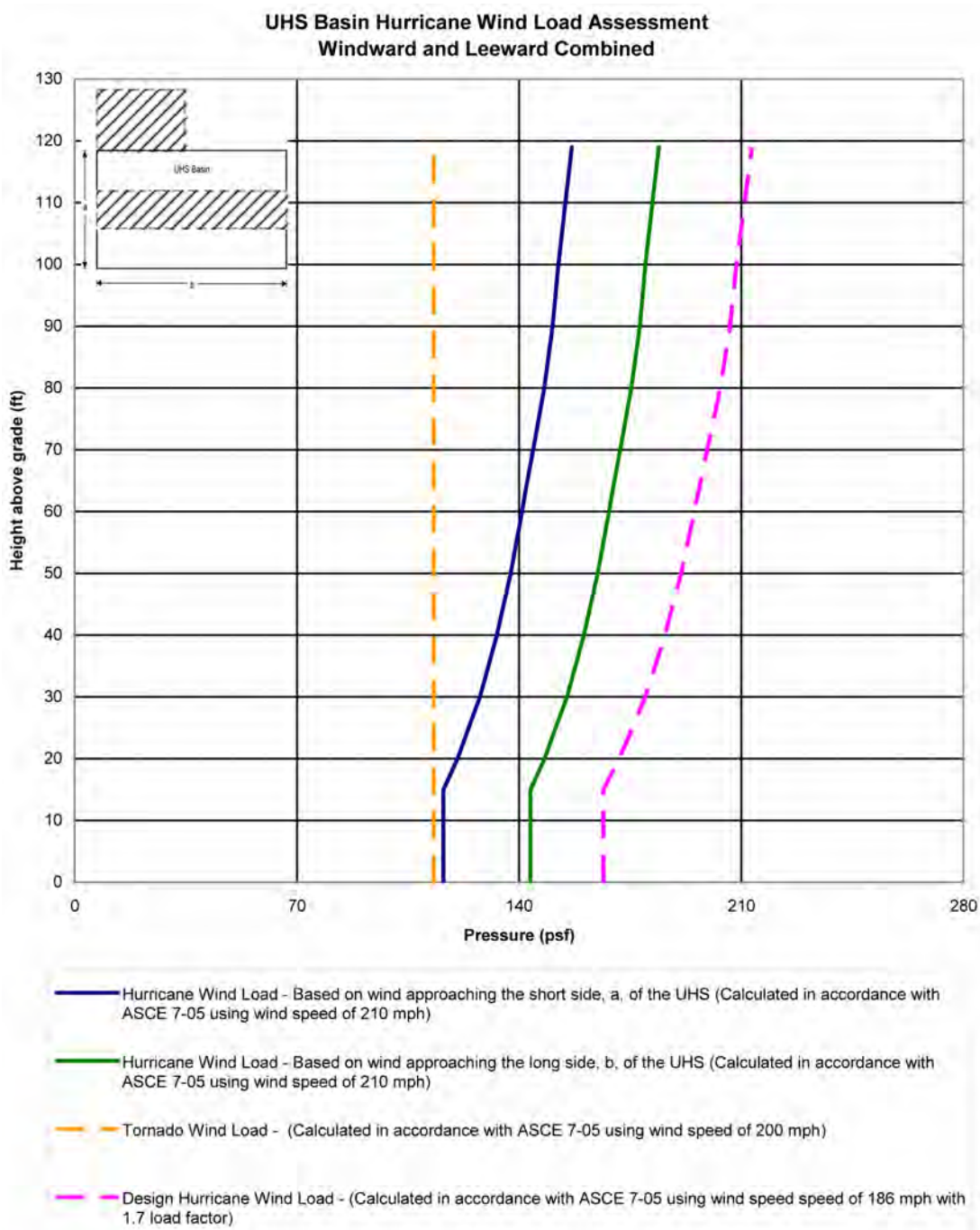

Figure 3H.11-10 Comparison of Hurricane and Tornado Wind Pressures for UHS Basin and Cooling Towers

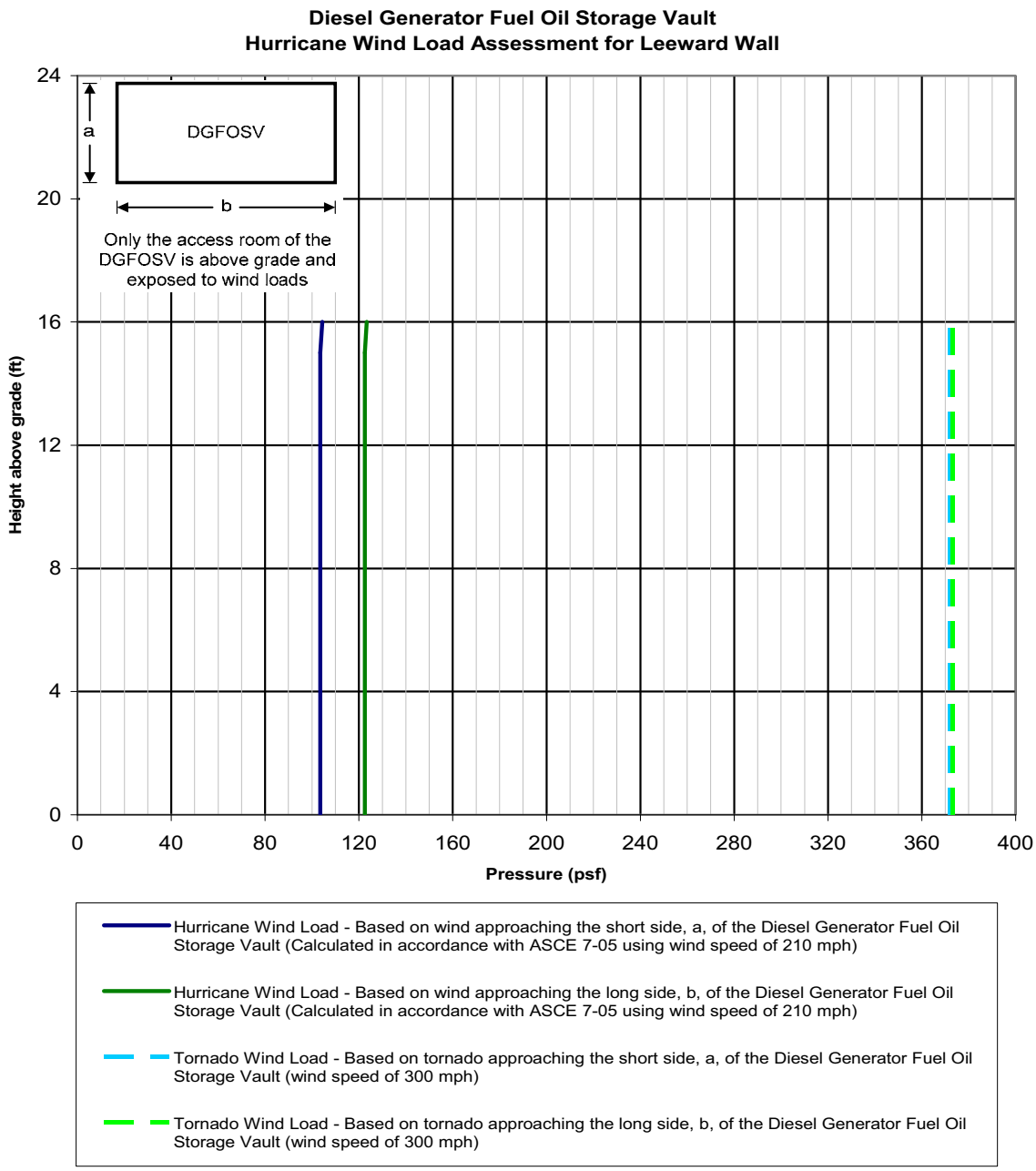

Figure 3H.11-11 Comparison of Hurricane and Tornado Wind Pressures for Diesel Generator Fuel Oil Storage Vaults

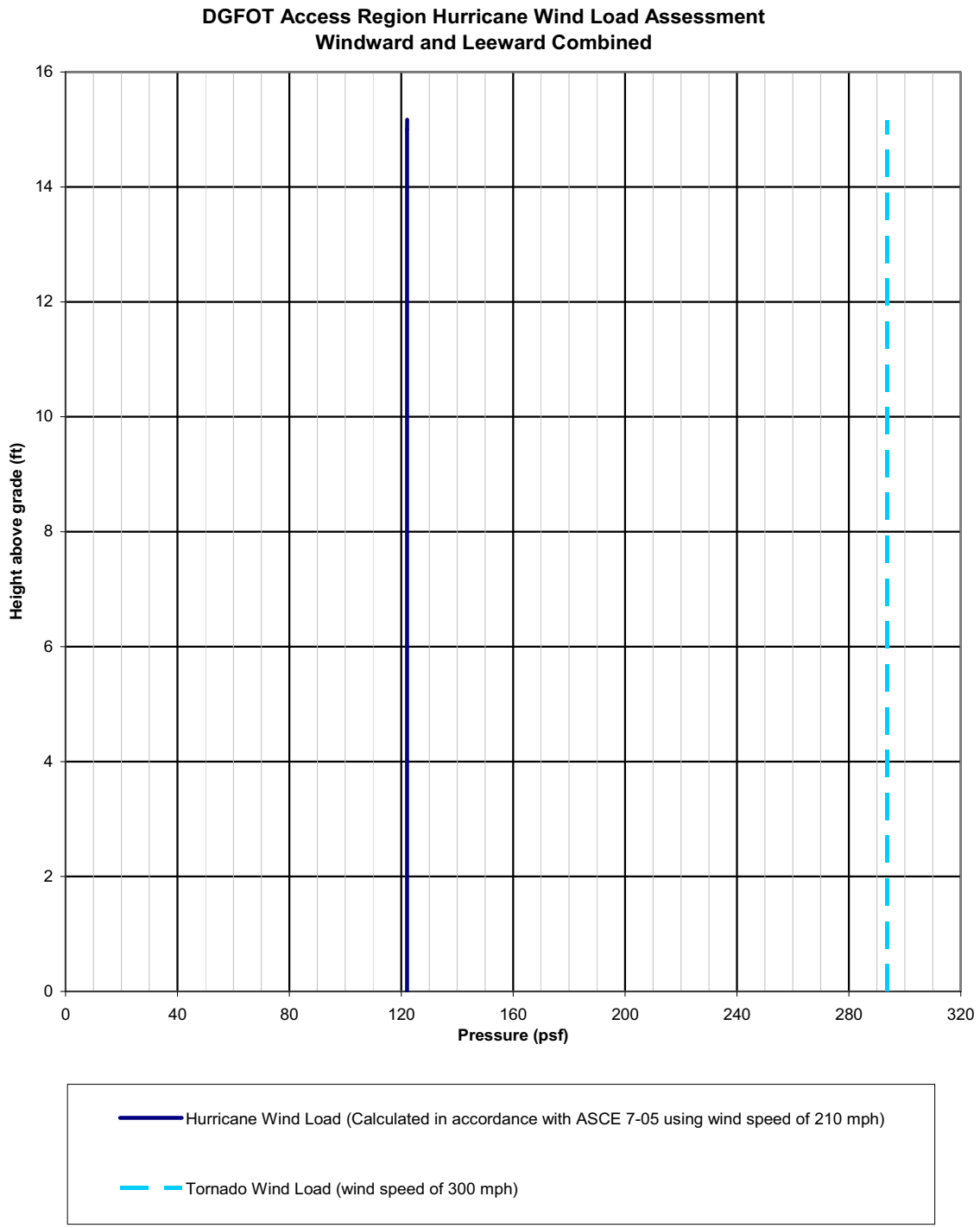

Figure 3H.11-12 Comparison of Hurricane and Tornado Wind Pressures for Diesel Generator Fuel Oil Tunnels

3I Equipment Qualification Environmental Design Criteria

The information in this section of the reference ABWR DCD, including all subsections, tables, and figures, is incorporated by reference with the following departures.

STD DEP T1 2.14-1 (Table 3I-13)

STD DEP T1 2.15-2 (Table 3I-4 and Table 3I-14)

STD DEP T1 3.4-1 (Table 3I-13 note)

STD DEP 3I-2 (Table 3I-7)

STD DEP Admin

3I.0.1 COL License Information

The following site-specific supplement addresses COL License Information Item 3.43.

The radiation environment conditions given in Tables 3I-7 through 3I-11 and Tables 3I-16 through 3I-19 will be revised as necessary based upon as-designed and as-procured equipment. These tables in the FSAR will be updated as necessary in accordance with 10 CFR 50.71(e).

Table 3I-4 Thermodynamic Environment Conditions Inside Reactor Building (Outside Secondary Containment) Plant Normal Operating Conditions

Plant Zone/Typical Equipment	Pressure[1] kPaG	Temperature °C	Relative Humidity
		Max ~~50~~ **60**	Max 90
Diesel generator rooms [Figs. 1.2-8/9.5-6]	0	Min 10	Min 10

Table 3I-13 Thermodynamic Environment Conditions Inside Reactor Building (Secondary Containment) Plant Accident Conditions[1] (Continued)

Plant Zone/Typical Equipment		Time[2] 1 (h)	6 (h)	12 (h)	100 (day)
~~*FCS[6] valves including Isolation valve (recombiner instrument, controls), electrical equipment (power source cables)[Figs. 1.2-8/6.2-40]*~~	~~*Temperature (°C)*~~ ~~*Pressure (kPaG)*~~ ~~*Humidity (%)*~~	~~*120*~~ ~~*102.97[3]*~~ ~~*Steam*~~	~~*120*~~ ~~*102.97[3]*~~ ~~*Steam*~~	~~*66*~~ ~~*3.43*~~ ~~*100*~~	~~*66*~~ ~~*0*~~ ~~*90 max*~~

4. *Safety-related motor control centers, power centers, metal clad switchgear, and remote ~~multiplexing units~~* digital logic controllers *in the reactor building are located outside the secondary containment in the emergency electrical equipment rooms.*

Table 3I-14 Thermodynamic Environment Conditions Inside Reactor Building (Outside Secondary Containment) Plant Accident Conditions

Plant Zone/Typical Equipment	Pressure[1] kPaG	Temperature °C	Relative Humidity
		Max ~~50~~ **60**	Max 90
Diesel generator room [Figs. 1.2-8/9.5-6]	0	Min 10	Min 10

Table 3I-17 Radiation Environment Conditions Inside Reactor Building Design Basis Accident (Secondary Containment)

Plant Zone/Typical Equipment	Accident	LOCA Dose Rate Gamma (Gy/h)	LOCA Dose Rate Beta (Gy/h)	Integrated Dose[1] Gamma (Gy)	Integrated Dose[1] Beta (Gy)
General floor area [Fig. 1.2-4]	15.6.5	8E-2	2E+0	2E+1	3E+2
RHR room [Figs. 1.2-4/5.4-10]	15.6.5	2E+3	1E+5	6E+5	8E+7
RCIC room [Figs. 1.2-4/5.4-8]	15.6.2	7E-2	1E+0	9E-1	3E+1
HPCF room [Figs. 1.2-4/6.3-7]	15.6.5	1E+3	6E+4	4E+5	5E+7
SGTS room [Figs. 1.2-10/6.5-1]	15.6.5	2E+4	2E+0	3E+7	3E+2
MS tunnel [Figs. 1.2-8/5.1-3]	15.6.4	9E-1	7E+0	~~*2E+0*~~**4E+1**	~~*9E+0*~~**9E+0**
Divisional valve room [Figs 1.2-5/ECCS]	15.6.5	2E+3	2E+5	8E+5	2E+8
Instrument rack room [Figs. 1.2-6/ECCS]	15.6.5	3E-2	2E+0	~~*5E+0*~~**5E+0**	~~*5E+2*~~**5E+2**

1. Integration dose is summed over a six month period for Accident Case 15.6.5, 6 hours for 15.6.2, and 2 hours for 15.6.4.

3J Not Used

The information in this appendix of the reference ABWR DCD is incorporated by reference with no departures or supplements.

3K Designated NEDE-24326-1-P Material Which May Not Change Without Prior NRC Staff Approval

The information in this appendix of the reference ABWR DCD, including all subsections, is incorporated by reference with no departures or supplements.

3L Evaluation of Postulated Ruptures in High Energy Pipes

The information in this appendix of the reference ABWR DCD, including all subsections and figures, is incorporated by reference with no departures or supplements.

3M Resolution Of Intersystem Loss Of Coolant Accident For ABWR

The information in this appendix of the reference ABWR DCD, including all subsections and tables, is incorporated by reference with the following departures.

STD DEP 11.2-1 (Table 3M-1)

STD DEP T1 2.4-3

3M.3 Boundary Limits of URS

STD DEP 11.2-1

(2) It is impractical to design or construct large tank structures to the URS design pressure that are vented to atmosphere and have a low design pressure. Tanks included in this category are:

(a) Condensate storage tank,

(b) SLC main tank,

(c) LCW collector ~~*receiving*~~ *tank,*

(d) HCW collector ~~*receiving*~~ *tank,*

(e) FPC skimmer surge tank, and

(f) FPC spent fuel storage pool and cask pit.

(g) Condensate hotwell

In summary, the following low pressure sinks are protected by an adjacent closed valve and are impractical to design to the URS design pressure.

(3) ***SLC main tank*** *-- Vented to atmosphere with the first closed valve at least 2.82 MPaG rating . The SLC main tank is designed to Seismic Category I.*

(4) ***LCW*** **Collector** ~~***Receiving***~~ ***Tank*** *- Vented to atmosphere, and the first closed valve is at least 2.82 MPaG and one of the* four ~~*dual*~~ *tank's inlet valves is locked open.*

(5) ***HCW*** **Collector** ~~***Receiving***~~ ***Tank*** *- Vented to atmosphere, and the first closed valve is at least 2.82 MPaG and one of the* three ~~*dual*~~ *tank's inlet valves is locked open.*

(6) ***FPC Skimmer Surge Tank*** *- The Fuel Pool Cooling Cleanup System's skimmer surge tank is open to the near atmospheric pressure of the refueling floor. The first closed valve is at least 2.82 MPaG rated. The FPC skimmer surge tank is designed to Seismic Category I.*

3M.4 Evaluation Procedure

STD DEP 11.2-1

Typical systems for this upgrade include the:

(1) Radwaste LCW and HCW collector *~~receiving~~ tank piping,*

(2) Fuel Pool Cooling System's RHR interface piping connected to the skimmer surge tanks,

(3) Condensate Storage System's tank locked open supply valves,

(4) Makeup Water Condensate and Makeup Water Purified Systems with locked open valves and pump bypass piping to the Condensate Storage Tank.

All test, vent and drain piping was upgraded where it interfaces with the piping upgraded to URS pressure. Similarly, all instrument and relief valve connecting piping was upgraded.

3M.5 Systems Evaluated

STD DEP 11.2-1

The following fourteen systems, interfacing directly or indirectly with the RCPB, were evaluated.

	Tier 2 Figure No.
11. Makeup Water (Purified) (MUWP) System.	*9.2-5*
12. Radwaste System (LCW Collector *~~Receiving~~Tank, HCW* Collector *~~Receiving~~ Tank).*	*11.2-2*
13. Condensate and Feedwater (CFS) System	*10.4-6*

3M.8 Results

STD DEP T1 2.4-3

STP DEP 11.2-1

The results of this work are shown by the markups of the enclosed P&IDs, which are Tier 2 figures. The affected sheets are listed below

System	Tier 2 Figure No.	Affected Sheet Nos.
1. Residual Heat Removal (RHR) System	5.4-10	1, 2, 3, 4, 6, 7
2. High Pressure Core Flooder (HPCF) System	6.3-7	1, 2
3. Reactor Core Isolation Cooling (RCIC) System	5.4-8	1, 3
4. Control Rod Drive (CRD) System	4.6-8	1, 3
5. Standby Liquid Control (SLC) System	9.3-1	1
6. Reactor Water Cleanup (CUW) System	5.4-12	1, 3
7. Fuel Pool Cooling and Cleanup (FPC) System	9.1-1	1, 2
8. Nuclear Boiler (NB) System	5.1-3	1, 5
9. Reactor Recirculation (RRS) System	5.4-4	1
10. Makeup Water (Condensate) (MUWC) System	9.2-4	1
11. Makeup Water (Purified) (MUWP) System	9.2-5	1, 2, 3
12. Radwaste System (LCW Collector~~Receiving~~ Tank, HCW Collector~~Receiving~~ Tank)	11.2-2	1, 3, 7
13. Condensate and Feedwater (CSF) System	10.4-6	
14. Sampling (SAM) System Also, see Attachment A for more detail.		

The design pressure of the following ~~two tanks~~tank was upgraded as a result of the evaluations performed in Attachment 3MA.

SLC test tank
~~RCIC turbine barometric condenser tank~~

Table 3M-1 Low Pressure Sink Component Sizes

Tank Name	Volume m^3	Diameter m	Height m	Length m	Width m	Design Pressure MPaG	Note
Condensate storage tank	2110	13.9	13.9			1.37	(1)
SLC main tank	32	3.44	3.44			SWH	(1)
LCW collector ~~receiving~~ tank	140 ~~430~~	5.63 ~~8.18~~	5.63 ~~8.18~~			SWH ~~0.98~~	(1)
HCW collector ~~receiving~~ tank	140 ~~45~~	5.63 ~~3.85~~	5.63 ~~3.85~~			SWH ~~0.98~~	(1)
FPC skimmer surge tank	30	2.3	7.2			SWH	
FPC spent fuel storage pool	2960		11.8	17.9	14.0	SWH	
FPC cask pit	121		11.8	3.2	3.2	SWH	
Condensate hotwell	7800		20	30	13		

Notes:

(1) Diameter and height calculated from volume based on diameter = height.
SWH = Static water head

3MA System Evaluation for ISLOCA

The information in this appendix of the reference ABWR DCD, including all subsections, is incorporated by reference with the following standard departures.

STD DEP T1 2.4-1

STD DEP T1 2.4-3

STD DEP T1 2.14-1

STD DEP 3MA-1

STD DEP Admin

Some of the tables in the following sections contain “xx” and “xxx” designation, indicating that the information will be determined later as a result of detailed design. This is the same convention as was used in the reference ABWR DCD.

3MA.2.2 Downstream Interfaces

The 6th bullet of this subsection is deleted to reflect the removal of the Flammability Control System.

STD DEP T1 2.14-1

- ~~*Flammability Control System branches off the main discharge line downstream of the branch that returns to the suppression pool. The FCS design pressure exceeds the URS design without upgrade.*~~

3MA.2.3 Upgraded Components - RHR System

The following information is added to the **RHR Subsystem A suction piping from the reactor pressure vessel** grouping.

STD DEP T1 2.4-1

Reference	Components	Press./Temp./Design/Seismic Class	Remarks
Sheet 2	***300A-RHR-F016A Valve LC	2.82 MPaG, 182°C, 3B, As	Was 1.37 MPaG
	***300A-RHR-098 Pipe	2.82 MPaG, 182°C, 3B, As	Was 1.37 MPaG

*** To FPC System interface

STD DEP 3MA-1

RHR Subsystem A suction piping from the suppression pool.

Reference	Components	Press./Temp./Design/ Seismic Class	Remarks
Sheet 3	20A-RHR-042 Pipe	2.82 MPaG, 182°C, 3B, As	Was 1.37 MPaG
	20A-RHR-F061A Valve	2.82 MPaG, 182°C, 3B, As	Was 1.37 MPaG

RHR Subsystem A suction piping from the reactor pressure vessel.

Reference	Components	Press./Temp./Design/ Seismic Class	Remarks
Sheet 3	*~~50A~~ 20A-RHR-F712A Valve*	*2.82 MPaG, 182°C, 3B, As*	*Was 1.37 MPaG*

RHR Subsystem A discharge fill pump suction piping from the suppression pool.

Reference	Components	Press./Temp./Design/ Seismic Class	Remarks
Sheet 3	25A-RHR-709 Pipe	2.82 MPaG, 182°C, 3B, As	Was 1.37 MPaG
	25A-RHR-F718A Valve	2.82 MPaG, 182°C, 3B, As	Was 1.37 MPaG
	25A-RHR-F719A Valve	2.82 MPaG, 182°C, 3B, As	Was 1.37 MPaG
	25A-RHR-PX013A Press.Pt.	2.82 MPaG, 182°C, 3B, As	Was 1.37 MPaG

RHR Subsystem A discharge from relief valves and test line valve directly to the suppression pool without restriction.

Reference	Components	Press./Temp./Design/ Seismic Class	Remarks
Sheet 3	20A-RHR-041 Pipe	0.310 MPaG, 104°C, 3B, As	No Change
	20A-RHR-060A Valve	0.310 MPaG, 104°C, 3B, As	No Change
Sheet 2	250A-RHR-055A Valve	0.310 MPaG, 104°C, 3B, As	No Change

RHR Subsystem B suction piping from the suppression pool.

Reference	Components	Press./Temp./Design/ Seismic Class	Remarks
Sheet 4	20A-RHR-152 Pipe	2.82 MPaG, 182°C, 3B, As	Was 1.37 MPaG
	20A-RHR-061B Valve	2.82 MPaG, 182°C, 3B, As	Was 1.37 MPaG

RHR Subsystem B discharge fill pump suction piping from the suppression pool.

Reference	Components	Press./Temp./Design/ Seismic Class	Remarks
Sheet 4	*25A-RHR-123 Pipe*	*2.82 MPaG, ~~182°C~~182°C, 3B, As*	*Was 1.37 MPaG*
	25A-RHR-741 Pipe	2.82 MPaG, 182°C, 3B, As	Was 1.37 MPaG
	25A-RHR-F718B Valve	2.82 MPaG, 182°C, 3B, As	Was 1.37 MPaG
	25A-RHR-F719B Valve	2.82 MPaG, 182°C, 3B, As	Was 1.37 MPaG
	25A-RHR-PX013B Press.Pt.	2.82 MPaG, 182°C, 3B, As	Was 1.37 MPaG

RHR Subsystem C suction piping from the suppression pool.

Reference	Components	Press./Temp./Design/ Seismic Class	Remarks
Sheet 6	20A-RHR-255 Pipe	2.82 MPaG, 182°C, 3B, As	Was 1.37 MPaG
	20A-RHR-F061C Valve	2.82 MPaG, 182°C, 3B, As	Was 1.37 MPaG

RHR Subsystem B discharge from relief valves and test line valve directly to the suppression pool without restriction.

Reference	Components	Press./Temp./Design/ Seismic Class	Remarks
Sheet 4	20A-RHR-151 Pipe	0.310 MPaG, 104°C, 3B, As	No Change
	20A-RHR-060B Valve	0.310 MPaG, 104°C, 3B, As	No Change
Sheet 2	250A-RHR-055B Valve	0.310 MPaG, 104°C, 3B, As	No Change

RHR Subsystem B interface with Radwaste System.

Reference	Components	Press./Temp./Design/ Seismic Class	Remarks
Sheet 4	150A-RHR-023 Pipe	3.43 MPaG, 66°C, 3B, As	No Change
	150A-RHR-230 Pipe	3.43 MPaG, 66°C, 3B, As	No Change
	150A-RHR-129 Pipe	*3.43 MPaG, ~~182~~66°C , 3B, As*	*No Change*
	150A-RHR-FE012B Flow El.	3.43 MPaG, 66°C, 3B, As	No Change
	20A-RHR-739 Pipe	3.43 MPaG, 66°C, 3B, As	No Change
	20A-RHR-740 Pipe	3.43 MPaG, 66°C, 3B, As	No Change
	20A-RHR-714B Valve	3.43 MPaG, 66°C, 3B, As	No Change
	20A-RHR-715B Valve	3.43 MPaG, 66°C, 3B, As	No Change
	20A-RHR-716B Valve	3.43 MPaG, 66°C, 3B, As	No Change
	20A-RHR-717B Valve	3.43 MPaG, 66°C, 3B, As	No Change
	20A-RHR-FT012B Press.Trans.	3.43 MPaG, 66°C, 3B, As	No Change
	100A-RHR-146 Pipe	3.43 MPaG, 66°C, 3B, As	No Change
	100A-RHR-F052B Valve	3.43 MPaG, 66°C, 3B, As	No Change
	200A-LCW-~~CS~~SS Pipe	*0.981 MPaG, 66°C, 4D, B*	*No Change*
	200A-LCW-~~CS~~SS Valve LO	*0.981 MPaG, 66°C, 4D, B*	*No Change*
	200A-LCW-*~~CS~~SS AO Valve*	*0.981 MPaG, 66°C, 4D, B*	*No Change*
	200A-LCW-~~CS~~SS Valve LO	*0.981 MPaG, 66°C, 4D, B*	*No Change*
	200A-LCW-~~CS~~SS AO Valve	*0.981 MPaG, 66°C, 4D, B*	*No Change*
	200A-LCW-SS Valve LO	0.981 MPaG, 66°C, 4D, B	No Change
	200A-LCW-SS AO Valve	0.981 MPaG, 66°C, 4D, B	No Change
	* LCW Collector Tank C	0 MPaG, 66°C, 4D, B	No Change
	200A-LCW-SS Valve LO	0.981 MPaG, 66°C, 4D, B	No Change
	200A-LCW-SS AO Valve	0.981 MPaG, 66°C, 4D, B	No Change
	* LCW Collector Tank D	0 MPaG, 66°C, 4D, B	No Change

RHR Subsystem C discharge fill pump suction piping from the suppression pool.

Reference	*Components*	*Press./Temp./Design/ Seismic Class*	*Remarks*
Sheet 6	25A-RHR-770 Pipe	2.82 MPaG, 182°C, 3B, As	Was 1.37 MPaG
	25A-RHR-F718C Valve	2.82 MPaG, 182°C, 3B, As	Was 1.37 MPaG
	25A-RHR-F719C Valve	2.82 MPaG, 182°C, 3B, As	Was 1.37 MPaG
	25A-RHR-PX013C Press.Pt.	2.82 MPaG, 182°C, 3B, As	Was 1.37 MPaG

RHR Subsystem C discharge from relief valves and test line valve direct to the suppression pool without restriction.

Reference	Components	Press./Temp./Design/ Seismic Class	Remarks
Sheet 6	20A-RHR-254 Pipe	0.310 MPaG, 104°C, 3B, As	No change
	20A-RHR-060C Valve	0.310 MPaG, 104°C, 3B, As	No change
Sheet 2	250A-RHR-F055C Valve	0.310 MPaG, 104°C, 3B, As	No change

RHR Subsystem C flushing line interface at branch discharge to RPV.

Reference	Components	Press./Temp./Design/ Seismic Class	Remarks
Sheet 7	*100A-RHR -F032C Valve*	*3.43 MPaG, 182°C, 3B, As*	*No change*

RHR Subsystem C flushing line interface at suction of shutdown branch from RPV.

Reference	Components	Press./Temp./Design/ Seismic Class	Remarks
Sheet ~~2~~1	*100A-MUWC-~~140~~139 Pipe*	*1.37 MPaG, 66°C, 4D, B*	*No change*
Sheet 2	*100A-RHR -F040C Valve*	*2.82 MPaG, 182°C, 3B, As*	*Was 1.37 MPaG*

RHR Subsystem C outdoor fire truck connection in RHR pump discharge pipe to RPV.

Reference	Components	Press./Temp./Design/ Seismic Class	Remarks
Sheet 7	*~~20~~100A-RHR-FE-100 Flow El.*	*3.43 MPaG, 182°C, 3B, As*	*No change*

3MA.3.3 Upgraded Components - HPCF System

STD DEP 3MA-1

HPCF Subsystem B suction piping from the suppression pool.

Reference	Components	Press./Temp./Design/ Seismic Class	Remarks
Sheet 2	xxA-HPCF-030B Valve	2.82 MPaG, 104°C, 3B, As	Was 1.37 MPaG
	xxA-HPCF-xxx Pipe	2.82 MPaG, 104°C, 3B, As	Was 1.37 MPaG

HPCF Subsystem B keep fill line interface.

Reference	Components	Press./Temp./Design/ Seismic Class	Remarks
Sheet 1	20A-HPCF-707 Pipe	10.79 MPaG, 100°C, 3B, As	No change
	20A-HPCF-716B Valve	10.79 MPaG, 100°C, 3B, As	No change
	20A-HPCF-717B Valve	10.79 MPaG, 100°C, 3B, As	No change
	20A-HPCF-PX010B Press.Pt.	10.79 MPaG, 100°C, 3B, As	No change

HPCF Subsystem C suction piping from the suppression pool and condensate storage tank.

Reference	Components	Press./Temp./Design/ Seismic Class	Remarks
Sheet 2	*20A-HPCF-PX004C Press. Pt*	*2.82 MPaG, 100°C, 3B, As*	*Was 1.37 MPaG*
	400A-HPCF-~~106~~110 Pipe	*2.82 MPaG, 100°C, 3B, As*	*Was 1.37 MPaG*
	20A-HPCF-F030C Valve	2.82 MPaG, 100°C, 3B, As	Was 1.37 MPaG
	20A-HPCF-xxx- Pipe	2.82 MPaG, 100°C, 3B, As	Was 1.37 MPaG
	~~*400A-HPCF-110 Pipe*~~	~~*0.310 MPaG, 104°C, 3B, As*~~	~~*No change*~~
	400A-HPCF-105 Pipe	1.37 MPaG, 66°C, 3B, B(S1,S2)	No change

HPCF Subsystem C keep fill line interface.

Reference	Components	Press./Temp./Design/ Seismic Class	Remarks
Sheet 1	20A-HPCF-807 Pipe	10.79 MPaG, 100°C, 3B, As	No change
	20A-HPCF-716C Valve	10.79 MPaG, 100°C, 3B, As	No change
	20A-HPCF-717C Valve	10.79 MPaG, 100°C, 3B, As	No change
	20A-HPCF-PX010C Press.Pt.	10.79 MPaG, 100°C, 3B, As	No change

3MA.4.1 Upgrade Description

STD DEP Admin

The URS boundary was terminated at the last valve before the suppression pool, which is valve ~~E510-F006~~E51-F006 and is normally closed. The suppression pool is a large structure, impractical to upgrade to the URS design pressure. The only portions of the RCIC System that are not upgraded to the URS design pressure is unobstructed piping to the suppression pool.

3MA.4.3 Upgraded Components - RCIC System

STD DEP T1 2.4-3

STD DEP 3MA-1

RCIC turbine condensate piping to the suppression pool

Reference	Components	Press./Temp./Design/ Seismic Class	Remarks
Sheet 3	20A-RCIC-723-S Pipe	8.62 MPaG, 302°C, 3B, As	Was 0.981 MPaG
	20A-RCIC-724-S Pipe	8.62 MPaG, 302°C, 3B, As	Was 0.981 MPaG
	20A-RCIC-725-S Pipe	8.62 MPaG, 302°C, 3B, As	Was 0.981 MPaG
	20A-RCIC-726-S Pipe	8.62 MPaG, 302°C, 3B, As	Was 0.981 MPaG
	20A-RCIC-F724 Valve	8.62 MPaG, 302°C, 3B, As	Was 0.981 MPaG
	20A-RCIC-F725 Valve	8.62 MPaG, 302°C, 3B, As	Was 0.981 MPaG
	20A-RCIC-PT014A Press.Trans.	8.62 MPaG, 302°C, 3B, As	Was 0.981 MPaG
	20A-RCIC-PT014B Press.Trans.	8.62 MPaG, 302°C, 3B, As	Was 0.981 MPaG
	20A-RCIC-PT014E Press.Trans.	8.62 MPaG, 302°C, 3B, As	Was 0.981 MPaG
	20A-RCIC-PT014F Press.Trans.	8.62 MPaG, 302°C, 3B, As	Was 0.981 MPaG
~~*Reference*~~	~~*Components*~~	~~*Press./Temp./Design/ Seismic Class*~~	~~*Remarks*~~
	~~*** 25A-RCIC-051-S Pipe*~~	~~*8.62 MPaG, 302°C,3B,As*~~	~~*Was 0.981 MPaG*~~
	~~*** 25A-RCIC-F051 Valve*~~	~~*8.62 MPaG, 302°C,3B,As*~~	~~*Was 0.981 MPaG*~~
	~~*** 25A-RCIC-D012 Strainer*~~	~~*8.62 MPaG, 302°C,3B,As*~~	~~*Was 0.981 MPaG*~~
	~~*** 25A-RCIC-D013 S.Trap*~~	~~*8.62 MPaG, 302°C,3B,As*~~	~~*Was 0.981 MPaG*~~
	~~*** 25A-RCIC-F052 Valve*~~	~~*8.62 MPaG, 302°C,3B,As*~~	~~*Was 0.981 MPaG*~~
~~*Sheet 3*~~	~~*** 25A-RCIC-052-S Pipe*~~	~~*2.82 MPaG, 184°C,4D,As*~~	~~*Was 0.981 MPaG*~~
	xxA-RCIC-xxx Pipe	8.62 MPaG, 302°C, 3B, As	Was 0.981 MPaG
	80A-RCIC-054-S Pipe	0.981 MPaG, 184°C, 3B, As	No change
	80A-RCIC-F054-S Check V.	0.981 MPaG, 184°C, 3B, As	No change
	80A-RCIC-F055-S Check V.	0.981 MPaG, 184°C, 3B, As	No change
Sheet 1	*A-RCIC-F069 T.Valve*	~~*2.82*~~*8.62 MPaG*, ~~*184°C*~~ 302°C, *3B, As*	*Was 10.981 MPaG*

~~** Vent via Rupture Disks.*~~
~~*** RCIC Turbine Condensate Piping to the Barometric Condenser.*~~

RCIC pump suction piping

Reference	Components	Press./Temp./Design/ Seismic Class	Remarks
Sheet 1	*20~~0~~A-RCIC-F060 Valve*	*2.82 MPaG, 77°C, 3B, As*	*Was 1.37 MPaG*
	20A-RCIC-xxx Pipe	2.82 MPaG, 77°C, 3B, As	Was 1.37 MPaG
	xxA-RCIC-F062 Valve	2.82 MPaG, 104°C, 3B, As	Was 1.37 MPaG
	xxA-RCIC-xxx- Pipe	2.82 MPaG, 104°C, 3B, As	Was 1.37 MPaG

RCIC discharge from relief valves and test line valve direct to the suppression pool without restriction.

Reference	Components	Press./Temp./Design/ Seismic Class	Remarks
Sheet 2	*250A-RHR- 008 Pipe*	*0.310 MPaG, 104°C,3B,As*	*No change*

~~RCIC vacuum tank condensate piping to the suppression pool.~~

~~Reference~~	~~Components~~	~~Press./Temp./Design/ Seismic Class~~	~~Remarks~~
~~Sheet 3~~	~~50A-RCIC-Vacuum Pump~~	~~2.82 MPaG, 121°C,4D,As~~	~~Was 0.755 MPaG~~
~~———~~	~~50A-RCIC-044-S Pipe~~	~~2.82 MPaG, 88°C,4D,As~~	~~Was 0.310 MPaG~~
~~———~~	~~50A-RCIC-067-S Pipe~~	~~2.82 MPaG, 88°C,4D,As~~	~~Was 0.310 MPaG~~
~~———~~	~~50A-RCIC-PCV Valve~~	~~2.82 MPaG, 121°C,4D,As~~	~~Was 0.755 MPaG~~
~~Sheet 3~~	~~20A-RCIC-068-S Pipe~~	~~2.82 MPaG, 121°C,4D,As~~	~~Was 0.981 MPaG~~
~~Sheet 1~~	~~50A-RCIC-F046 Check V.~~	~~2.82 MPaG, 104°C,3B,As~~	~~Was 0.310 MPaG~~
~~———~~	~~20A-RCIC-057-S Pipe~~	~~2.82 MPaG, 104°C,3B,As~~	~~Was 0.310 MPaG~~
~~———~~	~~20A-RCIC-F059 T.Valve~~	~~2.82 MPaG, 104°C,3B,As~~	~~Was 0.310 MPaG~~
~~———~~	~~50A-RCIC-F047 MO Valve~~	~~2.82 MPaG, 104°C,3B,As~~	~~Was 0.310 MPaG~~
~~———~~	~~50A-RCIC-045-S Pipe~~	~~0.981 MPaG, 104°C,3B,As~~	~~No change~~
~~Sheet 1~~	~~Suppression Pool~~		

~~RCIC steam drains from trip and throttle valve piping and turbine to condensate chamber~~

~~Reference~~	~~Components~~	~~Press./Temp./Design/ Seismic Class~~	~~Remarks~~
~~Sheet 3~~	~~* 20A-RCIC-063-S Pipe~~	~~8.62 MPaG, 302°C,3B,As~~	~~Was 0.981 MPaG~~
~~———~~	~~* 20A-RCIC-061-S Pipe~~	~~8.62 MPaG, 302°C,3B,As~~	~~Was 0.981 MPaG~~
~~———~~	~~** 20A-RCIC-064-S Pipe~~	~~8.62 MPaG, 302°C,3B,As~~	~~Was 0.981 MPaG~~

~~** RCIC Trip and Throttle Valve leakoffs are piped to Condensing Chamber.*~~
~~*** RCIC Turbine Condensate Drain connects to the Condensing Chamber*~~

~~RCIC turbine valve leakoffs are piped to the barometric condenser~~

~~Reference~~	~~Components~~	~~Press./Temp./Design/ Seismic Class~~	~~Remarks~~
~~Sheet 3~~	~~* 25A-RCIC-058-S Pipe~~	~~2.82 MPaG, 184°C,4D,As~~	~~Was 0.981 MPaG~~
~~———~~	~~** 25A-RCIC-059-S Pipe~~	~~2.82 MPaG, 184°C,4D,As~~	~~Was 0.981 MPaG~~
~~———~~	~~Barometric Condenser~~	~~2.82 MPaG, 184°C,4D,As~~	~~Was 0.755 MPaG~~
~~———~~	~~*** 25A-RCIC-065-S Pipe~~	~~2.82 MPaG, 184°C,4D,As~~	~~Was 0.755 MPaG~~
~~———~~	~~25A-RCIC-Relief Valve~~	~~2.82 MPaG, 121°C,4D,As~~	~~Was 0.755 MPaG~~
~~———~~	~~25A-RCIC-066-S Pipe~~	~~0 MPaG, 121°C,4D,As~~	~~No change~~

~~** RCIC Trip and Throttle Valve Stem leakoff is piped to the Barometric*~~
~~*** RCIC Turbine Governor Valve Stem is piped to the to Barometric Condenser.*~~
~~**** Barometric Condenser Press. relief and piping.*~~

~~**RCIC pump cooling water piping for pump and turbine lube oil coolers**~~

~~Reference~~	~~Components~~	~~Press./Temp./Design/ Seismic Class~~	~~Remarks~~
~~Sheet 3~~	~~50A-RCIC-011-W Pipe~~	~~2.82 MPaG,77°C,3B,As~~	~~Was 0.863 MPaG~~
~~——————~~	~~50A-RCIC-028-W Pipe~~	~~2.82 MPaG, 77°C,3B,As~~	~~Was 0.863 MPaG~~
~~——————~~	~~50A-RCIC-F030 Relief V.~~	~~2.82 MPaG, 77°C,3B,As~~	~~Was 0.863 MPaG~~
~~——————~~	~~50A-RCIC-029-W Pipe~~	~~2.82 MPaG, 77°C,3B,As~~	~~Was 0.863 MPaG~~
~~——————~~	~~20A-RCIC-713-W Pipe~~	~~2.82 MPaG, 77°C,3B,As~~	~~Was 0.863 MPaG~~
~~——————~~	~~20A-RCIC-PX018 Press~~	~~2.82 MPaG, 77°C,3B,As~~	~~Was 0.863 MPaG~~
~~——————~~	~~50A-RCIC-Turb.LO Cooler~~	~~2.82 MPaG, 77°C,3B,As~~	~~Was 0.863 MPaG~~
~~——————~~	~~50A-RCIC-Pump LO Cooler~~	~~2.82 MPaG, 77°C,3B,As~~	~~Was 0.863 MPaG~~
~~——————~~	~~15A-RCIC-TX019 Temp.Pt.~~	~~2.82 MPaG, 77°C,3B,As~~	~~Was 0.863 MPaG~~
~~——————~~	~~20A-RCIC-714-W Pipe~~	~~2.82 MPaG, 77°C,3B,As~~	~~Was 0.863 MPaG~~
~~——————~~	~~20A-RCIC-F714 Valve~~	~~2.82 MPaG, 77°C,3B,As~~	~~Was 0.863 MPaG~~
~~——————~~	~~20A-RCIC-PX020 Press.Pt.~~	~~2.82 MPaG, 77°C,3B,As~~	~~Was 0.863 MPaG~~
~~——————~~	~~15A-RCIC-012-W Pipe~~	~~2.82 MPaG, 77°C,3B,As~~	~~Was 0.863 MPaG~~
~~——————~~	~~15A-RCIC-013-W Pipe~~	~~2.82 MPaG, 77°C,3B,As~~	~~Was 0.863 MPaG~~
~~——————~~	~~15A-RCIC-014-W Pipe~~	~~2.82 MPaG, 77°C,3B,As~~	~~Was 0.863 MPaG~~
~~——————~~	~~15A-RCIC-015-W Pipe~~	~~2.82 MPaG, 77°C,3B,As~~	~~Was 0.863 MPaG~~
~~Sheet 3~~	~~Barometric Condenser~~	~~2.82 MPaG, 121°C,4D,As~~	~~Was 0.755 MPaG~~

~~**RCIC vacuum tank and condensate pump piped to RCIC pump suction pipe**~~

~~Reference~~	~~Components~~	~~Press./Temp./Design/ Seismic Class~~	~~Remarks~~
~~Sheet 3~~	~~RCIC Vacuum Tank~~	~~2.82 MPaG, 77°C,4D,As~~	~~Was 0.755 MPaG~~
~~——————~~	~~RCIC Press. Switch H~~	~~2.82 MPaG, 121°C,4D,As~~	~~Was 0.755 MPaG~~
~~——————~~	~~RCIC Level Switch H~~	~~2.82 MPaG, 121°C,4D,As~~	~~Was 0.755 MPaG~~
~~——————~~	~~RCIC Level Switch L~~	~~2.82 MPaG, 121°C,4D,As~~	~~Was 0.755 MPaG~~
~~——————~~	~~RCIC Cond. Pump~~	~~2.82 MPaG, 88°C,4D,As~~	~~Was 1.37 MPaG~~
~~——————~~	~~50A-RCIC-F014 Check V.~~	~~2.82 MPaG, 88°C,4D,As~~	~~Was 1.37 MPaG~~
~~——————~~	~~50A-RCIC-016-W Pipe~~	~~2.82 MPaG, 88°C,4D,As~~	~~Was 1.37 MPaG~~
~~——————~~	~~20A-RCIC-715-W Pipe~~	~~2.82 MPaG, 88°C,4D,As~~	~~Was 1.37 MPaG~~
~~——————~~	~~20A-RCIC-F715 Valve~~	~~2.82 MPaG, 88°C,4D,As~~	~~Was 1.37 MPaG~~
~~——————~~	~~20A-RCIC-PX021 Press.Pt.~~	~~2.82 MPaG, 88°C,4D,As~~	~~Was 1.37 MPaG~~
~~——————~~	~~50A-RCIC-F015 Valve~~	~~2.82 MPaG, 88°C,3B,As~~	~~Was 1.37 MPaG~~
	~~50A-RCIC-017-W Pipe~~	~~2.82 MPaG, 88°C,3B,As~~	~~Was 1.37 MPaG~~
~~——————~~	~~50A-RCIC-030-W Pipe~~	~~2.82 MPaG, 88°C,3B,As~~	~~Was 1.37 MPaG~~
~~——————~~	~~50A-RCIC-F031 MO Valve~~	~~2.82 MPaG, 88°C,3B,As~~	~~Was 1.37 MPaG~~

~~———————~~	~~50A-RCIC-F032 AO Valve~~	~~2.82 MPaG, 88°C,3B,As~~	~~Was 1.37 MPaG~~
~~———————~~	~~20A-RCIC-032-W Pipe~~	~~2.82 MPaG, 88°C,3B,As~~	~~Was 1.37 MPaG~~
~~———————~~	~~20A-RCIC-F034 T.Valve~~	~~2.82 MPaG, 88°C,3B,As~~	~~Was 1.37 MPaG~~
~~———————~~	~~* 50A-RCIC-F016 Check~~	~~2.82 MPaG, 77°C,3B,As~~	~~Was 1.37 MPaG~~

~~* 50A-RCIC-017 Pipe connects with RCIC pump suction 200A-RCIC-001-W Pipe on sheet 1 upgraded to 2.82 MPaG.~~

~~**Sheet 2: Valve gland leak off piping**~~
~~**Branch piping from RCIC steam supply isolation valves FO-035,inside primary containment and FO-036 outside primary containment to VGL Radwaste Treatment System.**~~

~~Reference~~	~~Components~~	~~Press./Temp./Design/Seismic Class~~	~~Remarks~~
~~Sh 2,I-11~~	~~25A-RCIC-506-S Pipe~~	~~8.62 MPaG, 302°C, 1A, As~~	~~Reactor Press~~
~~I-7~~	~~25A-RCIC-507-S Pipe~~	~~8.62 MPaG, 302°C, 1A, As~~	~~Reactor Press~~

Sheet 2: Instrument piping from RCIC steam supply piping to PT-009, PI-010 and level switch LS-011.

Reference	Components	Press./Temp./Design/ Seismic Class	Remarks
Sh 2,H-6	*20A-RCIC-716-S Pipe*	*8.62 MPaG, 302°C, 3B, As*	*Reactor Press*
	20A-RCIC-F716 Valve	8.62 MPaG, 302°C, 3B, As	Reactor Press
	20A-RCIC-F717 Valve	8.62 MPaG, 302°C, 3B, As	Reactor Press
H-7	*20A-RCIC-717-S Pipe*	*8.62 MPaG, 302°C,* 3B, *As*	*Reactor Press*
G-5	*20A-RCIC-718-S Pipe*	*8.62 MPaG, 302°C,* 3B, *As*	*Reactor Press*
	20A-RCIC-F718 Valve	8.62 MPaG, 302°C, 3B, As	Reactor Press
	20A-RCIC-F719 Valve	8.62 MPaG, 302°C, 3B, As	Reactor Press
F-5	*20A-RCIC-719-S Pipe*	*8.62 MPaG, 302°C,* 3B, *As*	*Reactor Press*
	20A-RCIC-F720 Valve	8.62 MPaG, 302°C, 3B, As	Reactor Press
	20A-RCIC-F721 Valve	8.62 MPaG, 302°C, 3B, As	Reactor Press

3MA.5.3 Upgraded Components - CRD System

STD DEP 3MA-1

CRD pump suction piping Condensate, Feedwater and Condensate Air Extraction System or Condensate Storage Tank of the Makeup Water System (Condensate).

Reference	Components	Press./Temp./Design/ Seismic Class	Remarks
Sheet 1	*100A-CRD-001 Pipe~~-S~~*	*2.82 MPaG, ~~20~~66°C, 6D, C*	*Was 1.37 MPaG*
	150A-MUWC-F~~-103~~xxxValve LO	*1.37 MPaG, 66°C, ~~B~~4D, ~~(S1,S2)~~As*	*No change*
	150A-CRD-002-S Pipe	*2.82 MPaG, ~~20~~66°C, 6D, C*	*Was 1.37 MPaG*
	50A-MUWC- F103Valve	*1.37 MPaG, 66°C, ~~6~~4D, C*	*Lock Open*
	50A-MUWC-103 Pipe	*Static Hd, 66°C, ~~6~~4D, C*	*No change*
	~~50A-CRD-033-S Pipe~~	*~~2.82 MPaG, 20°C, 6D, C~~*	*~~Was 1.37 MPaG~~*
	~~50A-CRD-032-S Pipe~~	*~~2.82 MPaG, 20°C, 6D, C~~*	*~~Was 1.37 MPaG~~*
	100A-CRD-F001A Gate V	*2.82 MPaG, ~~20~~66°C, 6D, C*	*Was 1.37 MPaG*
	100A-CRD-003~~-S~~ Pipe	*2.82 MPaG, ~~20~~66°C, 6D, C*	*Was 1.37 MPaG*

Reference	Components	Press./Temp./Design/Seismic Class	Remarks
Sheet 1	*CRD-D001A Filter*	*2.82 MPaG, ~~20~~66°C, 6D, C*	*Was 1.37 MPaG*
	20A-CRD-500~~-S~~ Pipe	*2.82 MPaG, ~~20~~66°C, 6D, C*	*Was 1.37 MPaG*
	20A-CRD-F500A Valve NC	*2.82 MPaG, ~~20~~66°C, 6D, C*	*Was 1.37 MPaG*
	20A-CRD-501~~-S~~ Pipe	*2.82 MPaG,~~20~~66°C, 6D, C*	*Was 1.37 MPaG*
	20A-CRD-F501A Globe V	*2.82 MPaG, ~~20~~66°C, 6D, C*	*Was 1.37 MPaG*
	100A-CRD-004~~-S~~ Pipe	*2.82 MPaG, ~~20~~66°C, 6D, C*	*Was 1.37 MPaG*
	100A-CRD-F002A Gate V	*2.82 MPaG, ~~20~~66°C, 6D, C*	*Was 1.37 MPaG*
	100A-CRD-F001B Gate V	*2.82 MPaG, ~~20~~66°C, 6D, C*	*Was 1.37 MPaG*
	100A-CRD-005~~-S~~ Pipe	*2.82 MPaG, ~~20~~66°C, 6D, C*	*Was 1.37 MPaG*
	CRD-D001B Filter	*2.82 MPaG, ~~20~~66°C, 6D, C*	*Was 1.37 MPaG*
	20A-CRD-502~~-S~~-Pipe	*2.82 MPaG, ~~20~~66°C, 6D, C*	*Was 1.37 MPaG*
	20A-CRD-F500B Globe V	*2.82 MPaG,~~20~~66°C, 6D, C*	*Was 1.37 MPaG*
	20A-CRD-503~~-S~~ Pipe	*2.82 MPaG, ~~20~~66°C, 6D, C*	*Was 1.37 MPaG*
	20A-CRD-F501B Globe V	*2.82 MPaG, ~~20~~66°C, 6D, C*	*Was 1.37 MPaG*
	100A-CRD-006~~-S~~ Pipe	*2.82 MPaG, ~~20~~66°C, 6D, C*	*Was 1.37 MPaG*
	100A-CRD-F002B Gate V	*2.82 MPaG, ~~20~~66°C, 6D, C*	*Was 1.37 MPaG*
	100A-CRD-007~~-S~~ Pipe	*2.82 MPaG, ~~20~~66°C, 6D, C*	*Was 1.37 MPaG*
	20A-CRD-700~~-S~~ Pipe	*2.82 MPaG, ~~20~~66°C, 6D, C*	*Was 1.37 MPaG*

CRD pump suction piping Condensate, Feedwater and Condensate Air Extraction System or Condensate Storage Tank of the Makeup Water System (Condensate). (Continued)

Reference	Components	Press./Temp./Design/ Seismic Class	Remarks
Sheet 1	*20A-CRD-F700 Globe V*	*2.82 MPaG, ~~20~~66°C, 6D, C*	*Was 1.37 MPaG*
	CRD-DPT001 Diff PT	*2.82 MPaG, ~~20~~66°C, 6D, C*	*Was 1.37 MPaG*
	20A-CRD-F701 Globe V	*2.82 MPaG, ~~20~~66°C, 6D, C*	*Was 1.37 MPaG*
	20A-CRD-701~~-S~~ Pipe	*2.82 MPaG, ~~20~~66°C, 6D, C*	*Was 1.37 MPaG*
	100A-CRD-F003A Gate V	*2.82 MPaG, ~~20~~66°C, 6D, C*	*Was 1.37 MPaG*
	100A-CRD-008~~-S~~ Pipe	*2.82 MPaG, ~~20~~66°C, 6D, C*	*Was 1.37 MPaG*
	25A-CRD-504~~-S~~ Pipe	*2.82 MPaG, ~~20~~66°C, 6D, C*	*Was 1.37 MPaG*
	25A-CRD-F004A Safe.RV	*2.82 MPaG, ~~20~~66°C, 6D, C*	*Was 1.37 MPaG*
	20A-CRD-702~~-S~~ Pipe	*2.82 MPaG, ~~20~~66°C, 6D, C*	*Was 1.37 MPaG*
	20A-CRD-F702A Globe V	*2.82 MPaG, ~~20~~66°C, 6D, C*	*Was 1.37 MPaG*
	CRD-PI002A Press I	*2.82 MPaG, ~~20~~66°C, 6D, C*	*Was 1.37 MPaG*
	CRD-PT003A Press T	*2.82 MPaG, ~~20~~66°C, 6D, C*	*Was 1.37 MPaG*
	CRD-C001A Pump	*~~3.43~~18.63 MPaG, 66°C, 6D, C*	*No change*
	** A-CRD-F502A Globe V*	*2.82 MPaG, ~~20~~66°C, 6D, C*	*Was 1.37 MPaG*
	** A-CRD-505~~-S~~ Pipe*	*2.82 MPaG, ~~20~~66°C, 6D, C*	*Was 1.37 MPaG*
	** A-CRD-F503A Globe V*	*2.82 MPaG, ~~20~~66°C, 6D, C*	*Was 1.37 MPaG*
	** A-CRD-F504A Globe V*	*2.82 MPaG, ~~20~~66°C, 6D, C*	*Was 1.37 MPaG*

CRD pump suction piping Condensate, Feedwater and Condensate Air Extraction System or Condensate Storage Tank of the Makeup Water System (Condensate). (Continued)

Reference	Components	Press./Temp./Design/ Seismic Class	Remarks
Sheet 1	** A-CRD-506~~-S~~ Pipe*	*2.82 MPaG, ~~20~~66°C, 6D, C*	*Was 1.37 MPaG*
	** A-CRD-507~~-S~~ Pipe*	*2.82 MPaG, ~~20~~66°C, 6D, C*	*Was 1.37 MPaG*
	** A-CRD-F505A Globe V*	*2.82 MPaG, ~~20~~66°C, 6D, C*	*Was 1.37 MPaG*
	** A-CRD-F506A Globe V*	*2.82 MPaG, ~~20~~66°C, 6D, C*	*Was 1.37 MPaG*
	100A-CRD-F003B Gate V	*2.82 MPaG, ~~20~~66°C, 6D, C*	*Was 1.37 MPaG*
	100A-CRD-010~~-S~~ Pipe	*2.82 MPaG, ~~20~~66°C, 6D, C*	*Was 1.37 MPaG*
	25A-CRD-508~~-S~~ Pipe	*2.82 MPaG, ~~20~~66°C, 6D, C*	*Was 1.37 MPaG*
	25A-CRD-F004B Safe.RV	*2.82 MPaG, ~~20~~66°C, 6D, C*	*Was 1.37 MPaG*
	20A-CRD-703~~-S~~ Pipe	*2.82 MPaG, ~~20~~66°C, 6D, C*	*Was 1.37 MPaG*
	20A-CRD-F702B Globe V	*2.82 MPaG, ~~20~~66°C, 6D, C*	*Was 1.37 MPaG*
	CRD-PI002B Press I	*2.82 MPaG, ~~20~~66°C, 6D, C*	*Was 1.37 MPaG*
	CRD-PT003B Press T	*2.82 MPaG, ~~20~~66°C, 6D, C*	*Was 1.37 MPaG*
	CRD-C001B Pump	*~~3.43~~18.63 MPaG, 66°C, 6D, C*	*No change*
	** A-CRD-509~~-S~~ Pipe*	*2.82 MPaG, ~~20~~66°C, 6D, C*	*Was 1.37 MPaG*
	** A-CRD-F502B Globe V*	*2.82 MPaG, ~~20~~66°C, 6D, C*	*Was 1.37 MPaG*
	** A-CRD-F503B Globe V*	*2.82 MPaG, ~~20~~66°C, 6D, C*	*Was 1.37 MPaG*
	** A-CRD-510~~-S~~ Pipe*	*2.82 MPaG, ~~20~~66°C, 6D, C*	*Was 1.37 MPaG*

CRD pump suction piping Condensate, Feedwater and Condensate Air Extraction System or Condensate Storage Tank of the Makeup Water System (Condensate). (Continued)

Reference	Components	Press./Temp./Design/ Seismic Class	Remarks
Sheet1	** A-CRD-F504B Globe V*	*2.82 MPaG, ~~20~~66°C, 6D, C*	*Was 1.37 MPaG*
	** A-CRD-F505B Globe V*	*2.82 MPaG, ~~20~~66°C, 6D, C*	*Was 1.37 MPaG*
	** A-CRD-511~~-S~~ Pipe*	*2.82 MPaG, ~~20~~66°C, 6D, C*	*Was 1.37 MPaG*
	** A-CRD-F506B Globe V*	*2.82 MPaG, ~~20~~66°C, 6D, C*	*Was 1.37 MPaG*
Sheet 3	25A-CRD-075 Pipe	2.82 MPaG, 66°C, 6D, C	Was 1.37 MPaG
	25A-CRD-076 Pipe	2.82 MPaG, 66°C, 6D, C	Was 1.37 MPaG
	25A-CRD-077 Pipe	2.82 MPaG, 66°C, 6D, C	Was 1.37 MPaG
	25A-CRD-F062A Valve	2.82 MPaG, 66°C, 6D, C	Was 1.37 MPaG
	25A-CRD-F062B Valve	2.82 MPaG, 66°C, 6D, C	Was 1.37 MPaG

CRD interface from pump discharge to the MUWC System condensate storage tank

Reference	Components	Press./Temp./Design/ Seismic Class	Remarks
	50A-CRD-034~~-S~~ Pipe	*18.63 MPaG, 66°C, 6D, C*	*No change*
	~~50~~20A-CRD-035~~-S~~ Pipe	*18.63 MPaG, 66°C, 6D, C*	*No change*
	~~50~~20A-CRD-F023 Globe V	*18.63 MPaG, 66°C, 6D, C*	*No change*
	50A-MUWC-xxx~~-S~~Pipe	*1.37 MPaG, 66°C, 6D, C*	*No change*

CRD interface from pump discharge to the RRS System

Reference	Components	Press./Temp./Design/ Seismic Class	Remarks
	20A-CRD-036~~-S~~ Pipe	*18.63 MPaG, 66°C, ~~4C~~6D, ~~B~~C*	*No change*
	20A-CRD-F024 Globe V	*18.63 MPaG, 66°C, ~~4C~~6D, ~~B~~C*	*No change*
	20A-CRD-F025 Globe V	*18.63 MPaG, 66°C, ~~4C~~6D, ~~B~~C*	*No change*

CRD interface from pump discharge to the CUW System

Reference	Components	Press./Temp./Design/ Seismic Class	Remarks
	20A-CRD-037-~~S~~ Pipe	*18.63 MPaG, 66°C, ~~4C~~6D, ~~B~~C*	*No change*
	20A-CRD-F026 Globe V	*18.63 MPaG, 66°C, ~~4C~~6D, ~~B~~C*	*No change*
	20A-CRD-F027 Globe V	*18.63 MPaG, 66°C, ~~4C~~6D, ~~B~~C*	*No change*

3MA.6.3 Upgraded Components - SLC System

STD DEP 3MA-1

SLC Injection Pump A suction piping from the SLC storage tank.

Reference	Components	Press./Temp./Design/ Seismic Class	Remarks
	SLC-C001A Pump	*10.79 MPaG, 66°C, ~~2~~3B, A*	*No change*
	SLC-F003A Relief V.	*10.79 MPaG, 66°C, ~~2~~3B, A*	*No change*
	50A-SLC Pipe	*2.82 MPaG, 66°C , ~~2~~3B, A*	*Was 1.37 MPaG*
	100A-SLC-F002A Valve LO	*2.82 MPaG, 66°C, ~~2~~3B, A*	*Was 1.37 MPaG*
	100A-SLC-SS Pipe	*2.82 MPaG, 66°C, ~~2~~3B, A*	*Was 1.37 MPaG*
	100A-SLC-F001A Valve MO	*2.82 MPaG, 66°C,~~2~~3B, A*	*Was 1.37 MPaG*
	** SLC-A001 Storage Tk.*	*Static Hd., 66°C, ~~2~~3B, A*	*No Change*

SLC Injection Pump B suction piping from the SLC storage tank.

Reference	Components	Press./Temp./Design/ Seismic Class	Remarks
	SLC-C001B Pump	*10.79 MPaG, 66°C, ~~2~~3B, A*	*No change*
	SLC-F003B Relief V.	*10.79 MPaG, 66°C, ~~2~~3B, A*	*No change*
	50A-SLC SS Pipe	*2.82 MPaG, 66°C , ~~2~~3B, A*	*Was 1.37 MPaG*
	100A-SLC-F002B Valve LO	*2.82 MPaG, 66°C,~~2~~3B, A*	*Was 1.37 MPaG*
	100A-SLC-SS Pipe	*2.82 MPaG, 66°C, ~~2~~3B, A*	*Was 1.37 MPaG*
	20A-SLC-SS Pipe	*2.82 MPaG, 66°C, ~~2~~3B, A*	*Was 1.37 MPaG*
	20A-SLC-F500 Valve	*2.82 MPaG, 66°C, ~~2~~3B, A*	*Was 1.37 MPaG*
	100A-SLC-F001B Valve MO	*2.82 MPaG, 66°C, ~~2~~3B, A*	*Was 1.37 MPaG*
	** SLC-A001 Storage Tk.*	*Static Hd., 66°C, ~~2~~3B, A*	*No Change*

SLC test tank piping.

Reference	Components	Press./Temp./Design/ Seismic Class	Remarks
	*** 40A-SLC-F011 Valve LC*	*10.79 MPaG, 66°C, ~~2~~3B, A*	*Was ATP*
	40A-SLC-SS Pipe	*~~10.79~~2.82 MPaG, 66°C, ~~2~~3B, ~~A~~C*	*Was 1.37 MPaG*
	SLC-A002 Test Tank	*2.82 MPaG, 66°C, ~~2~~3B, ~~A~~C*	*Was STH*
	100A-SLC-SS Pipe	*2.82 MPaG, 66°C, ~~2~~3B, ~~A~~C*	*Was 1.37 MPaG*
	100A-SLC-F012 Valve LC	*2.82 MPaG, 66°C, ~~2~~3B, A*	*Was 1.37 MPaG*
	25A-SLC-SS Pipe	*2.82 MPaG, 66°C, ~~2~~3B, ~~A~~C*	*Was 1.37 MPaG*
	SLC-F026 Relief V.	*2.82 MPaG, 66°C, ~~2~~3B, A*	*Was 1.37 MPaG*
	20A-SLC-SS Pipe	*2.82 MPaG, 66°C, ~~2~~3B, A*	*Was 1.37 MPaG*
	100A-SLC-SS Pipe	*2.82 MPaG, 66°C, ~~2~~3B, A*	*Was 1.37 MPaG*

SLC interface with MUWP for makeup and pressurization of suction piping from tank. (Pressure higher than static head of SLC storage tank.)

Reference	Components	Press./Temp./Design/ Seismic Class	Remarks
	80A-SLC-SS Pipe	*~~2.82~~1.37 MPaG, 66°C, ~~2~~3B, C*	*Was 1.37 MPaG*
	SLC-F013 Check V.	*2.82 MPaG, 66°C, ~~2~~3B, C*	*Was 1.37 MPaG*
	80A-SLC-SS Pipe	*2.82 MPaG, 66°C, ~~2~~3B, C*	*Was 1.37 MPaG*
	80A-SLC-F014 Valve LC	*2.82 MPaG, 66°C, ~~2~~3B, A*	*Was 1.37 MPaG*
	80A-SLC-SS Pipe	*2.82 MPaG, 66°C, ~~2~~3B, C*	*Was 1.37 MPaG*
	20A-SLC-SS Pipe	*2.82 MPaG, 66°C, ~~2~~3B, C*	*Was 1.37 MPaG*
	20A-SLC-F020 Valve LO	*2.82 MPaG, 66°C, ~~2~~3B, A*	*Was 1.37 MPaG*
	20A-SLC-D002 RO	*2.82 MPaG, 66°C, ~~2~~3B, A*	*Was 1.37 MPaG*
	20A-SLC-SS Pipe	*2.82 MPaG, 66°C, ~~2~~3B, C*	*Was 1.37 MPaG*

SLC storage tank interface with MUWP for purified makeup water.

Reference	Components	Press./Temp./Design/ Seismic Class	Remarks
	80A-SLC-SS Pipe	*~~2.82~~1.37MPaG, 66°C, ~~2~~3B, C*	*Was 1.37 MPaG*
	SLC-F013 Check V.	*2.82 MPaG, 66°C, ~~2~~3B, C*	*Was 1.37 MPaG*
	80A-SLC-SS Pipe	*2.82 MPaG, 66°C, ~~2~~3B, C*	*Was 1.37 MPaG*
Reference	**Components**	**Press./Temp./Design/ Seismic Class**	**Remarks**
	25A-SLC-SS Pipe	*2.82 MPaG, 66°C, ~~2~~3B, C*	*Was 1.37 MPaG*
	25A-SLC-F015 Valve LC	*2.82 MPaG, 66°C, ~~2~~3B, ~~A~~C*	*Was 1.37 MPaG*
	20A-SLC-SS Pipe	*2.82 MPaG, 66°C, ~~2B~~4D, C*	*Was 1.37 MPaG*
	20A-SLC-F505 Valve NO	*2.82 MPaG, 66°C, ~~2B~~4D, ~~A~~C*	*Was 1.37 MPaG*
	25A-SLC-SS Pipe	*2.82 MPaG, 66°C, ~~2B~~4D, C*	*Was 1.37 MPaG*
	25A-SLC-F023 Valve LC	*2.82 MPaG, 66°C, ~~2B~~4D, ~~A~~C*	*Was 1.37 MPaG*
	25A-SLC-SS Pipe	*~~2.82~~0.863 MPaG, 66°C, ~~2B~~4D, C*	*No Change*
	**SLC-A001 Storage TK.*	*Static Head, 66°C, ~~2~~3B, A*	*No Change*

3MA.7.3 Upgraded Component - CUW System

STD DEP 3MA-1

CUW system interface with Radwaste System

Reference	Components	Press./Temp./Design/ Seismic Class	Remarks
	xxA-CUW-xxx Pipe(Sam)	2.82 MPaG, 66°C, 6D, C	Was 0.981 MPaG
	xxA-CUW-xxx Pipe(RV)	2.82 MPaG, 66°C, 6D, C	Was 0.981 MPaG

3MA.8.1 Upgrade Description

STD DEP T1 2.4-1

This new line has the gate valve locked open with the check valve's flow direction into the skimmer surge tank and provides an open path into the skimmer surge tank from valves RHR F016A, *RHR-F016B and RHR-F016C.*

And to the last sentence of the second paragraph.

All the piping between the FPC valves, FPC-F029, FPC- F031, and FPC-F106 and the RHR valves, RHR-F016A, *RHR-F016B and RHR-F016C, were upgraded to the URS design pressure of 2.82 MPaG.*

The following information is added to the last sentence of the third paragraph.

Valves FPC-F093 and FPC-F017 are always locked open and provide an open path from the RHR valves, RHR-F015A, *RHR-F015B and RHR-F015C, to the spent fuel storage pool and cask pit.*

3MA.8.3 Upgraded Components - FPC System

STD DEP T1 2.4-1

STD DEP 3MA-1

Reference	Components	Press./Temp./Design/ Seismic Class	Remarks
	~~250A~~300A-RHR-F015A Valve MO	3.43 MPaG, 182°C,3B,As	No Change
	~~250A~~300A-FPC-SS Pipe	1.57 MPaG, 66°C,4C,A(S2)	No Change

The following information is added to the **FPC System interface with makeup from RHR System or SPCU System** grouping.

Reference	Components	Press./Temp./Design/ Seismic Class	Remarks
	300A-RHR-F016A Valve MO	2.82 MPaG, 182°C,3B,As	No Change
	300A-FPC-SS Pipe	2.82 MPaG, 66°C,4C,B(S1,S2)	No Change

* *FPC Valve F029 is open only for fuel pool cooling mode B (maximum heat load operation with RHR System A, B or C operating in parallel with FPC System).*

** *FPC Valve F031 is open only for fuel pool cooling mode B (refueling when Dryer/Separator Pool is drained and pumped to Radwaste LCW collector tank by RHR System A, B or C).*

FPC System interface with makeup from RHR System or SPCU System.

Reference	Components	Press./Temp./Design/ Seismic Class	Remarks
	~~250~~300A-RHR-F015C Valve MO	*3.43 MPaG, 182°C, 3B, As*	*No change*
	~~250~~300A-FPC-SS Pipe	*1.57 MPaG, 66°C, ~~3B,~~4C, A(S2)*	*No change*
	~~250~~300A-RHR-F015B Valve MO	*3.43 MPaG, 182°C, 3B, As*	*No change*
	250A-FPC-F022 Valve ~~LO~~LC	*1.57 MPaG, 66°C, 4C, A(S2)*	*No change*
	250A-FPC-SS Pipe	*1.57 MPaG, 66°C, 4C, ~~A(S2)~~B(S1,S2)*	*No change*
	250A-FPC-F023 Check Valve	*1.57 MPaG, 66°C, 4C, ~~A(S2)~~B(S1,S2)*	*No change*
	250A-FPC-SS Pipe	*1.57 MPaG, 66°C, 4C, ~~A(S2)~~B(S1,S2)*	*No change*
	20A-FPC-F097 Valve	1.57 MPaG, 66°C, 4C, A(S2)	No change
	20A-FPC-xxx SS Pipe	1.57 MPaG, 66°C, 4C, A(S2)	No change
	80A-FPC-F096 Valve	1.57 MPaG, 66°C, 4C, A(S2)	No change

3MA.10.3 Upgraded Component - RRS System

STD DEP 3MA-1

RRS interface with MUWP System for Reactor Internal Pump (RIP) casing makeup water.

Reference	Components	Press./Temp./Design/ Seismic Class	Remarks
	xxA-MUWP-xxx Pipe	2.82 MPaG, 66°C, 6D,C	Was 1.37 MPaG
	xxA-MUWP-Fxxx Valve	2.82 MPaG, 66°C, 6D,C	Was 1.37 MPaG
	15A-MUWP-188 Pipe	2.82 MPaG, 66°C, 6D,C	Was 1.37 MPaG
	15A-MUWP-F145 Valve	2.82 MPaG, 66°C, 6D,C	Was 1.37 MPaG
	50A-MUWP-186 Pipe	2.82 MPaG, 66°C, 6D,C	Was 1.37 MPaG
	50A-MUWP-F143 Valve	2.82 MPaG, 66°C, 6D,C	Was 1.37 MPaG
	50A-MUWP-187 Pipe	2.82 MPaG, 66°C, 6D,C	Was 1.37 MPaG
	50A-MUWP-F144 Valve	2.82 MPaG, 66°C, 6D,C	Was 1.37 MPaG
	xxA-MUWP-xxx Pipe	2.82 MPaG, 171°C, 3B,As	Was 1.37 MPaG
	xxA-MUWP-Fxxx Valve	2.82 MPaG, 171°C, 3B,As	Was 1.37 MPaG
	150A-~~RRS~~MUWP-Fxxx Check Valve	*1.37 MPaG, 66°C, 6D, C*	*No change*

3MA.11.3 Upgraded Components - ~~MUCW~~MUWC System

STD DEP 3MA-1

MUWC System interface with MUWP

Reference	Components	Press./Temp./Design/ Seismic Class	Remarks
	~~150~~125A-~~WUMP~~MUWP-101 SS Pipe	*1.37 MPaG, 66°C, ~~4~~6D, C*	*No change*
	150A-~~WUMP~~MUWP-Fxxx SS Valve LO	*1.37 MPaG, 66°C, ~~4~~6D, C*	*No change*
	150A~~WUMP~~MUWP-Fxxx SS Check V	*1.37 MPaG, 66°C, ~~4~~6D, C*	*No change*

MUWC interface with the CRD System pump discharge piping.

Reference	Components	Press./Temp./Design/ Seismic Class	Remarks
Sheet 1	*50A-MUWC-F103 Valve*	*1.37 MPaG, 66°C, 4D, B*	*Lock Open*

3MA.12.3 Upgraded Components - MUWP System

STD DEP 3MA-1

MUWP System interface with RRS for Reactor Internal Pump (RIP) casing makeup water.

Reference	Components	Press./Temp./Design/ Seismic Class	Remarks
Sheet 1	*~~15~~20A-RRS-502A-K Pipes*	*8.62 MPaG, 302°C, 4A, As*	*No change*
	~~15~~20A-RRS-F504A-K Valves NC	*8.62 MPaG, 302°C, 4A, As*	*No change*
	15A-MUWP-189-198 Pipes	*2.82 MPaG, 66°C, ~~4~~6D,C*	*Was 1.37 MPaG*
	50A-MUWP-185 Pipe	*2.82 MPaG, 66°C, ~~4~~6D,C*	*Was 1.37 MPaG*
	xxA-MUWP-xxx Pipe	2.82 MPaG, 66°C, 6D,C	Was 1.37 MPaG
	xxA-MUWP-Fxxx Valve	2.82 MPaG, 66°C, 6D,C	Was 1.37 MPaG
	15A-MUWP-188 Pipe	2.82 MPaG, 66°C, 6D,C	Was 1.37 MPaG
	15A-MUWP-F145 Valve	2.82 MPaG, 66°C, 6D,C	Was 1.37 MPaG
	50A-MUWP-186 Pipe	2.82 MPaG, 66°C, 6D,C	Was 1.37 MPaG
	50A-MUWP-F143 Valve	2.82 MPaG, 66°C, 6D,C	Was 1.37 MPaG
	50A-MUWP-187 Pipe	2.82 MPaG, 66°C, 6D,C	Was 1.37 MPaG
	50A-MUWP-F144 Valve	2.82 MPaG, 66°C, 6D,C	Was 1.37 MPaG
	xxA-MUWP-xxx Pipe	2.82 MPaG, 171°C, 3B,As	Was 1.37 MPaG
	xxA-MUWP-Fxxx Valve	2.82 MPaG, 171°C, 3B,As	Was 1.37 MPaG
	50A-MUWP-183 Pipe	*1.37 MPaG, 66°C, ~~4~~6D, C*	*No change*
	80A-MUWP-181 Pipe	*1.37 MPaG, 66°C, ~~4~~6D, C*	*No change*
	80A-MUWP-F140 Valve LO	*1.37 MPaG, 66°C, ~~4~~6D, C*	*No change*
	125A-MUWP-101 Pipe	*1.37 MPaG, 66°C, ~~4~~6D, C*	*No change*
	125A-MUWP-F101 Valve LO	*1.37 MPaG, 66°C, ~~4~~6D, C*	*No change*
	20A-MUWP-602 Pipe	*1.37 MPaG, 66°C, ~~4~~6D, C*	*No change*

MUWP System interface with RRS for Reactor Internal Pump (RIP) casing makeup water. (Cont.)

Reference	Components	Press./Temp./Design/ Seismic Class	Remarks
Sheet 1	*20A-MUWP-F602 Valve NC*	*1.37 MPaG, 66°C, ~~4~~6D, C*	*No change*
	20A-MUWP-601 Pipe	*1.37 MPaG, 66°C, ~~4~~6D, C*	*No change*
	20A-MUWP-F601 Valve NC	*1.37 MPaG, 66°C, ~~4~~6D, C*	*No change*
	20A-MUWP-FQ102 Flow Integr.	*1.37 MPaG, 66°C, ~~4~~6D, C*	*No change*
	20A-MUWP-801 Pipe	*1.37 MPaG, 66°C, ~~4~~6D, C*	*No change*
	20A-MUWP-F801 Valve NC	*1.37 MPaG, 66°C, ~~4~~6D, C*	*No change*
	20A-MUWP-800 Pipe	*1.37 MPaG, 66°C, ~~4~~6D, C*	*No change*
	20A-MUWP-F800 Valve NC	*1.37 MPaG, 66°C, ~~4~~6D, C*	*No change*
	20A-MUWP-PX101 Press. Pt.	*1.37 MPaG, 66°C, ~~4~~6D, C*	*No change*
	20A-MUWP-600 Pipe	*1.37 MPaG, 66°C, ~~4~~6D, C*	*No change*
	20A-MUWP-F600 Valve NC	*1.37 MPaG, 66°C, ~~4~~6D, C*	*No change*
	20A-MUWP-F100 Valve LO	*1.37 MPaG, 66°C, ~~4~~6D, C*	*No change*
	125A-MUWP-102 Pipe	*1.37 MPaG, 66°C, ~~4~~6D, C*	*No change*
	125A-MUWP-F102 Valve NC	*1.37 MPaG, 66°C, ~~4~~6D, C*	*No change*
	150A-MUWP-xxx Pipe	*1.37 MPaG, 66°C, ~~4~~6D, C*	*No change*
	150A-MUWP-xxx Pipe	*1.37 MPaG, 66°C, ~~4~~6D, C*	*No change*
	*150A-~~RRS~~*MUWP*-Fxxx Check Valve*	*1.37 MPaG, 66°C, ~~4~~6D, C*	*No change*
	150A-MUWP-xxx Pipe	*Static Head, 66°C, ~~4~~6D, C*	*No change*

3MA.13.1 Upgraded Description

STD DEP 3MA-1

*The Radwaste System LCW and HCW inlet piping header connects to each interfacing system at a valve. The header is not upgraded because it is an open pathway to the collector tanks. The ~~dual~~*four *LCW tanks rotate the fill mode one at a time through a level controlled AO valve at the inlet of each tank. The maintenance valve is a lock open type. The ~~dual~~*three *HCW tanks operate similarly to the LCW tanks.*

3MA.13.3 Upgraded Components - RW System

~~*RADWASTE SYSTEM, GE Proprietary Drawing 103E1634, Sheets 1, 3 and 7*~~.

RW LCW Subsystem interface with the RHR System

Reference	Components	Press./Temp./Design/ Seismic Class	Remarks
	200A-LCW-~~CS~~SS Pipe	*0.981 MPaG, 66°C,4D, B*	*No change*
	200A-LCW Valve LO	0.981 MPaG, 66°C,4D, B	No change
	200A-LCW-F001C AO Valve	0.981 MPaG, 66°C,4D, B	No change
	* LCW Collector Tank C	0 MPaG, 66°C, 4D, B	No change
	200A-LCW Valve LO	0.981 MPaG, 66°C,4D, B	No change
	200A-LCW-F001D AO Valve	0.981 MPaG, 66°C,4D, B	No change
	* LCW Collector Tank D	0 MPaG, 66°C, 4D, B	No change

RW HCW interface with the RHR System, Subsystem A

Reference	Components	Press./Temp./Design/ Seismic Class	Remarks
	150A-HCW-F00~~3~~2A Valve AO	*0.981 MPaG, 66°C,4D, B*	*No change*
	150A-HCW-F002B Valve AO	*0.981 MPaG, 66°C,4D, B*	*No change*
	150A-HCW-SS Valve LO	0.981 MPaG, 66°C,4D, B	No change
	150A-HCW-F002C Valve AO	0.981 MPaG, 66°C,4D, B	No change
	* HCW Collector Tank C	0 MPaG, 66°C, 4D, B	No change

RW HCW interface with the RHR System, Subsystem B

Reference	Components	Press./Temp./Design/ Seismic Class	Remarks
	150A-HCW-F00~~3~~2A Valve AO	*0.981 MPaG, 66°C,4D, B*	*No change*
	150A-HCW-F002B Valve AO	*0.981 MPaG, 66°C,4D, B*	*No change*
	150A-HCW-SS Valve LO	0.981 MPaG, 66°C,4D, B	No change
	150A-HCW-F002C Valve AO	0.981 MPaG, 66°C,4D, B	No change
	* HCW Collector Tank C	0 MPaG, 66°C, 4D, B	No change

RW HCW interface with the RHR System, Subsystem C

Reference	Components	Press./Temp./Design/ Seismic Class	Remarks
	150A-HCW-F00~~3~~2A Valve AO	*0.981 MPaG, 66°C,4D, B*	*No change*
	150A-HCW-F002B Valve AO	*0.981 MPaG, 66°C,4D, B*	*No change*
	150A-HCW-SS Valve LO	0.981 MPaG, 66°C,4D, B	No change
	150A-HCW-F002C Valve AO	0.981 MPaG, 66°C,4D, B	No change
	* HCW Collector Tank C	0 MPaG, 66°C, 4D, B	No change

4.0 Reactor

4.1 Summary Description

The information in this section of the reference ABWR DCD, including all subsections and figures, is incorporated by reference with the following supplement. A computer code that is used for analysis of reactor internal components is added to Section 4.1.4.1.

4.1.4.1 Reactor Internal Components

Computer codes used for the analysis of the internal components are as follows:

(10) ACSTIC2

4.1.4.1.10 ACSTIC2

ACSTIC2 is a Westinghouse computer code which is used for predicting the amplitudes of pump-induced acoustic pressures in fluid-handling systems using a node-flow path discretization methodology and a harmonic analysis algorithm. The pump is represented as what has been referred to in the literature as a “volumetric forcing function.” With this program, the fluid system is broken into nodes (pressure) and flow paths (mass flow), the latter connecting the former in multi-dimensional arrays or networks. The computer code is used to calculate pump-induced pressure pulsation loads on reactor internals.

4.2 Fuel System Design

The information in this section of the reference ABWR DCD, including all subsections and figures, is incorporated by reference with no departures or supplements.

4.3 Nuclear Design

The information in this section of the reference ABWR DCD, including all subsections, tables, and figures, is incorporated by reference with the following supplement.

As required by Section IV.A.3 of the ABWR Design Certification Rule, the plant-specific DCD must physically include the proprietary and safeguards information referenced in the ABWR DCD. Figure 4.3-2 in the reference ABWR DCD references proprietary information. The proprietary information that is referenced in the reference DCD is provided in COLA Part 10. This material has finality in accordance with Section VI.B.2 of the ABWR Design Certification Rule, and does not constitute a supplement to or departure from the reference ABWR DCD.

4.3.5 COL License Information

4.3.5.1 Thermal Hydraulic Stability

The following standard supplement addresses COL License Information Item 4.1.

COL License Information Item 4.1 requires the COL applicant to use NRC approved stability compliance methodology (Option III) if fuel design is changed. The fuel design is not being changed at this time.

4.4 Thermal–Hydraulic Design

The information in this section of the reference ABWR DCD, including all subsections, tables, and figures, is incorporated by reference with the following departures and supplements. STPNOC will provide an updated Stability Option III analysis once fuel is procured and the associated safety analysis is performed. This information will be available no later than 1 year prior to fuel load (COM 4.4-3).

STD DEP Admin

STD DEP 6C-1

4.4.3.1.3 Reactor Coolant System Geometric Data

STD DEP Admin

Table 4.4-5 provides the flow path length, height, liquid level, minimum elevations, and minimum flow areas for each major flow path volume within the reactor vessel. ~~and recirculation loops of the Reactor Coolant System.~~

4.4.5.5.2 MCPR Operating Limit Calculational

STD DEP Admin

A plant-unique MCPR operating limit is established to provide adequate assurance that the fuel cladding integrity safety limit for that plant is not exceeded for any moderate frequency AOO. This operating requirement is obtained by addition of the maximum ~~vCPR~~ ΔCPR value for the most limiting AOO (including any imposed adjustment factors) from conditions postulated to occur at the plant to the fuel cladding integrity safety limit.

4.4.6 Testing and Verification

STD DEP 6C-1

The testing and verification techniques to be used to assure that the planned thermal and hydraulic design characteristics of the core have been provided, and will remain within required limits throughout core lifetime are discussed in Chapter 14.

An analysis is performed to determine the required cooling for a fuel assembly post-LOCA. This analysis is discussed in Appendix 6C and is used to develop acceptance criteria for a downstream fuel effects test performed prior to initial cycle operation.

4.4.7 COL License Information

4.4.7.1 Power/Flow Operating Map

The following site-specific supplement addresses COL License Information Item 4.2.

No departures are being taken from the fuel design licensing basis that is described in the reference ABWR DCD, including the core loading map used for response analysis in Figure 4.3-1 and the basic control strategy in Table 4A-1. Consequently, the specific

power/flow operating map to be used at the plant is provided in subsection 4.4.3.3.1 and Figures 4.4-1 and 4.4-2 of the DCD.

4.4.7.2 Thermal Limits

The following site-specific supplement addresses COL License Information Item 4.3.

No departures are being taken from the fuel design licensing basis that is described in the reference ABWR DCD, including the core loading map used for response analysis in Figure 4.3-1 and the basic control strategy in Table 4A-1. Consequently, the results of the analysis to determine the thermal limits are provided in subsection 4.4.3.3.1 of the DCD.

4.5 Reactor Materials

The information in this section of the reference ABWR DCD, including all subsections, is incorporated by reference with the following departure and supplement.

STD DEP 4.5-1

STD DEP Vendor

4.5.1 Control Rod Drive System Structural Materials

4.5.1.1 Material Specifications

STD DEP 4.5-1

(1) Material List

The following material listing applies to the control rod drive (CRD) mechanism supplied for this application. The position indicator and minor non-structural items are omitted. The listing includes materials for reactor pressure boundary components that must meet all ASME Code, Section III, Class 1 requirements (Subsection NB).

The properties of the materials selected for reactor pressure boundary of *the CRD mechanism shall be equivalent to those given in Appendix I to Section III of the ASME Code or Parts A and B of Section II of the ASME Code, or are included in Regulatory Guide ~~1.85~~* 1.84*, except that cold-worked austenitic stainless steels shall be controlled by limiting hardness, bend radius, or the amount of induced strain.*

(a) Spool Piece Assembly

Spool Piece Housing	*ASME* SA-*182*/182M *Grade F304L*, F304*, F316L, F316*or ASME SA-336/336M Grade F304*, F316*
Seal Housing	*ASME* SA-*182*/182M *Grade F304L*, F304*, F316L, F316* or ASME SA-336/336M Grade F304*, F316*
Drive Shaft	~~*ASME 479 Grade XM*~~ASME SA-479/479M Type 316*, 316L or ASTM A479/479M Type 316*/**, 316L** *(Hard surfaced with ~~Colmonoy No. 6~~*Colmonoy No.6 or equivalent Nickel base alloy*)*
Ball Bearings (in water)	*ASTM* A756 Type440C** or~~*A756*~~ A 276 *Type 440C***

Ball Bearings (in air)	AISI 52100**
Gland Packing Spring	~~*Inconel X-750*~~ AMS 5699 Alloy N07750** (Alloy X-750)
Separation Spring	AMS 5699 Alloy N07750** (Alloy X-750)
Separation Magnet	Alnico No. 5 and ASME SA-479/479M Type 316*, 316L or ASTM A479/479M Type 316*/**, 316L**

(b) Ball Spindle

Ball Screw Shaft	ASME SA-564/564M Type 630 Condition H-1100 or *ASTM A-564*/564M ~~*TP630*~~ Type 630 *(17-4PH)***
	Condition H-1100
Ball Nut	ASME SA-564/564M Type 630 Condition H-1100 or *ASTM A-564*/564M ~~*TP630*~~ Type 630 *(17-4PH)* **
	Condition H-1100
Balls	*ASTM* A756 Type 440C** or ~~*A756*~~ A 580/580M *Type 440C*** or A276 Type 440C**
Guide Roller	*Stellite No. 3*, or nickel base alloy
Guide Roller Pin	~~*Haynes Alloy No. 25,*~~ ASME SA-479/479M Type XM-19 (Nitrided) or ASTM A479/479M Type XM-19** (Nitrided) or equivalent ferrous base alloy
Spindle Head Bolt	~~*Stellite No. 6B*~~ Stellite No. 6B**
Spindle Head Bushing	*Stellite No. 12***
~~*Separation Spring*~~	~~*Inconel X-750*~~
~~*Separation Magnet*~~	~~*Alnico No. 5/*~~

(c) Buffer Mechanism

Buffer Disk Spring	ASME SB-637 Alloy N07750 or~~*Inconel X-750*~~ ASTM B 637 Alloy N07750**or AMS 5542 Alloy N07750**
	(Alloy X-750)
Buffer Sleeve	ASME SA-479/479M Type 316*,316L (Hard surfaced with Colmonoy No.6) or ASTM A 479/479M Type 316*/**~~*316L*~~, 316L**
	(Hard surfaced with Colmonoy No. 6)
Guide Roller	*Stellite No. 3*, or nickel base alloy
Guide Roller Pin	~~*Haynes Alloy No. 25,*~~ ASME SA-479/479M Type XM-19 (Nitrided) or ASTM A479/479M Type XM-19** (Nitrided) or equivalent ferrous base alloy
Stop Piston	ASME SA-479/479M Type 316*,316L (Hard surfaced with Stellite No.6) or ASTM A 479/479M Type 316*/**~~*316L*~~, 316L**
	(Hard surfaced with Stellite No. 6)~~*~~

(d) Hollow Piston

Piston Tube	ASME SA-312/312M Grade TPXM-19 or~~*XM-19*~~ ASTM A 312/312M
	Grade TPXM-19
~~*Piston Head*~~ Drive Piston	ASME SA-479/479M Type 316*, 316L (Hard surfaced with Stellite No.6) or~~*316L (Hardsurfaced with Stellite No. 3)*~~ ASTM A 479/479M Type 316*/** 316L**
	(Hard surfaced with Stellite No. 6)
Latch	~~*Inconel X-750*~~ ASME SB-637 Alloy N07750 or ASTM B 637 Alloy N07750**
	(Alloy X-750)
Latch Spring	~~*Inconel X-750*~~ AMS 5699 Alloy N07750**

	(Alloy X-750)
Bayonet Coupling	ASME SB-637 Alloy N07750 or ~~*Inconel X-750*~~ ASTM B 637 Alloy N07750**
	(Alloy X-750)

(e) Guide Tube

Guide Tube	~~*316L*~~ ASME SA-312/312M Grade TP316*, TP316L or ASTM A 312/312M Grade TP316*/**, TP316L**

(f) Outer Tube Assembly

Outer Tube	ASME SA-312/312M Grade TPXM-19 or ~~*XM-19*~~ ASTM A 312/312M Grade TPXM-19**
Middle Flange	*ASME SA-182*/182M *Grade F304L~~C~~*, F304*, F316L, F316* or ASME SA-336/336M Grade F304*, F316*

(g) Miscellaneous Parts

Ball for Check Valve	~~*Haynes*~~ *Stellite No.3,* or equivalent cobalt base alloy
O-Ring Seal (Between CRD) Housing and CRD)	~~*321SS*~~ Type 321 stainless steel ~~*Coated*~~coated *with a qualified material*
CRD Installation Bolts	*ASME SA-193*/193M *Grade B7*

* The material shall be qualified to ensure that it is free from sensitization. Carbon content specified to be 0.020% maximum.

** Equivalent materials have been provided. Materials with similar chemical composition, mechanical properties, and operating experience are considered equivalent.

(2) Special Materials

*The bayonet coupling~~, latch~~ and latch ~~spring, separation spring, and gland packing spring~~ are fabricated from Alloy X-750 in the high temperature (1093°C) ~~annealed~~*solution heat treated *condition, and aged 20 hours at 704°C to produce a tensile strength of ~~1137.7~~* 1034 *MPa minimum, yield of*

~~724~~ 655 MPa minimum, and elongation of 20% minimum. The ball screw shaft and ballnut are ASTM A 564, Type ~~TP~~ 630 (17-4PH) (or its equivalent) in condition H-1100 (aged 4 hours at 593°C), with a tensile strength of 965 ~~265.3~~ MPa minimum, ~~yield of~~ yield strength of 795 ~~792.92~~ MPa minimum, and elongation of ~~15~~ 14% minimum.

These are widely used materials, whose properties are well known. The parts are readily accessible for inspection and replaceable if necessary.

All materials for use in this system shall be selected for their compatibility with the reactor coolant as described in Articles NB-2160 and NB-3120 of the ASME Code.

~~All~~Special materials, (X-750, 17-4PH)~~except SA479 or SA249 Grade XM-19,~~ have been successfully used for ~~the~~ ~~past~~ at least ~~15 to 20~~25 years in similar drive mechanisms (LPCRD or FSCRD). ~~Extensive laboratory tests have demonstrated that ASME SA479 or SA249 Grade XM-19 are suitable materials and that they are resistant to stress corrosion in a BWR environment.~~

No cold-worked austenitic stainless steels except those with controlled hardness or strain are employed in the Control Rod Drive (CRD) System. During fabrication and installation, special controls are used to limit the induced strain, and the bend radii are kept above a minimum value.

4.5.1.2 Austenitic Stainless Steel Components

STD DEP 4.5-1

(1) Processes, Inspections and Tests

All austenitic stainless steels are used in the solution heat treated condition. In all welded components which are exposed to service temperature exceeding 93°C, the carbon content of 300 series stainless steel is limited not to exceed 0.020%. On qualification, there is a special process employed which subjects selected 300 series~~Series~~ stainless steel components to temperatures in the sensitization range. The drive shaft, buffer sleeve, ~~piston~~ drive piston, stop piston~~head and buffer~~ are hard surfaced with ~~Colmonoy 6 (~~Colmonoy No.6 or ~~its /~~an equivalent~~)~~. ~~Colmonoy (or its equivalent) hard~~ Hard-surfaced components have performed successfully for the past 25~~15~~ to 30~~20~~ years in drive mechanisms. It is normal practice to remove some CRDs at each refueling outage. At this time, ~~the Colmonoy (or its equivalent)~~ hard surfaced parts are accessible for visual examination. This inspection program is adequate to detect any incipient defects before they could become serious enough to cause operating problems (see Subsection 4.5.3.1 for COL license information). The degree of conformance to Regulatory Guide 1.44 is presented in Subsection 4.5.2.4.

4.5.1.4 Cleaning and Cleanliness Control

STD DEP 4.5-1

STD DEP Vendor

Semiannual examination of 10% of the units humidity indicators is required to verify that the units are dry and in satisfactory condition. This inspection shall be performed with a ~~GE Engineering~~ designated representative present. The position indicator probes are not subject to this inspection.

Site or warehouse storage specifications require inside heated storage comparable to Level B of ~~ANSI N45.2.2~~ NQA-1, Part II, Subpart 2.2.

4.5.2 Reactor Materials

STD DEP 4.5-1

4.5.2.1 Material Specifications

Materials Used for the Core Support Structure:

- ***Shroud Support***—Niobium modified Nickel-Chromium-Iron Alloy 600 per ASME Code Case No. N-580-2 ~~*Nickel Chrome Iron Alloy, ASME SB166 or SB168*~~

- ***Shroud, Core Plate, and Grid***—ASME SA-240/240M Type 316L or Type 316* and SA479/479M Type XM-19, ~~*SA182,*~~ SA-479/479 Type 316L, ~~*SA312, SA249, or SA213 (all Type 304L or 316L)*~~SA-182/182M Grade F316L

- ***Peripheral Fuel Supports***—**ASME** ~~*SA312 Grade Type 304L or 316L*~~SA-479/479M Type 316* or Type 316L

- ***Core Plate and Top Guide Studs, Nuts, and Sleeves***~~—*ASME SA-479 (Type 304, 316, or XM 19) (all parts); or SA-193 Grade B8 Type 304 (studs); or SA-194 Grade 8 (Type 304) (nuts); or SA-479 (Type 304L or 316L), SA-182 (Grade F304L or F316L), SA-213 (Type 304L, 316 or 316L), SA-249 (Type 304L, 316, or 316L) (sleeves)*~~ASME SA-479/479M Type 316* or Type 316L and XM-19

- ***Control Rod Drive Housing***~~—*ASME SA-312 Grade TP304L or 316L SA-182 Grade F304L or F316L, and ASME SA-351 Type CF3 (Type 304L) or Type CF3M (Type 316L)*~~ASME SA-336/336M Grade F316* or ASME SA-312/312M TP316*

- ***Control Rod Guide Tube***~~—*ASME SA-351 Type CF3 or CF3M, or SA-358, SA-312, or SA-249 (Type 304L or 316L)*~~ASME SA-312/312M Grade TP316* or Type 316L (Body), SA-479/479M Type XM-19 (Base), SA 312/312M Grade TPXM-19 (Sleeve)

- ***Orificed Fuel Support***—*ASME SA-351*/351M *Grade* CF3 ~~*Type CF3 (Type 304L) or CF3M (Type 316L)*~~

* The base material shall be qualified to assure that it is free from sensitization. Carbon content is specified to be 0.02% maximum.

Materials Employed in Shroud Head and Separator Assembly and Steam Dryer Assembly:

All materials are ~~304L or~~ 316L stainless steel except castings, Steam Dryer Vanes, and Steam Dryer Seismic Blocks.

- *Plate, Sheet* and Strip*—ASTM A 240 Type ~~304L or~~ 316L~~ and Strip~~*or ASME SA-240/240M Type 316L
- *Forgings—ASTM A182 Grade ~~304L or~~* F*316L* or ASME SA-182/182M Grade F316L
- *Bars~~—ASTM A276 Type 316L or 304L~~* ASTM A 479 Type 316L or ASME SA-479/479M Type 316L
- *Pipe—ASTM A 312 Grade TP~~ 304L or~~316L* or ASME SA-312/312M Grade TP 316L
- *Tube—ASTM A269 Grade TP~~ 304L or~~ 316L* or ASME SA-312/312M Grade TP 316L or SA-403/403M WP 316L
- *Castings—ASTM A 351 Grade* CF3*~~CF8, CF8M~~*or ASME SA-351/351M Grade CF3
- Steam Dryer Seismic Blocks—ASTM A 240 Type XM-19 or ASME SA-240/240M Type XM-19
- Steam Dryer Vanes—ASTM A 240 Type 304L or 316L or ASME SA-240/240M Type 304L or 316L

All core support structures are fabricated from ASME specified materials, and designed in accordance with requirements of ASME Code Section III, Subsection NG. The other reactor internals are noncoded, and they are fabricated from ASTM or ASME specification materials or other equivalent specifications.

4.5.2.2 Controls on Welding

STD DEP 4.5-1

Core support structures are fabricated in accordance with requirements of ASME Code Section III, Subsection NG-4000, and the examination and acceptance criteria shown in NG-5000. ~~Other internals are not required to meet ASME Code requirements. ASME Section IX B&PV Code requirements are followed in fabrication of core support structures.~~

The internals, other than the core support structures, meet the requirements of the industry standards, e.g., ASME or AWS, as applicable. ASME B&PV Code Section IX

qualification requirements are followed in fabrication of core support structures. All welds are made with controlled weld heat input.

4.5.2.3 Non-Destructive Examination of Wrought Seamless Tubular Products

STD DEP 4.5-1

~~*Wrought seamless tubular products for CRD housings and peripheral fuel supports are supplied in accordance with ASME Section III, Class CS, which requires examination of the tubular products by radiographic and/or ultrasonic methods according to Paragraph NG-2550. The examination will satisfy the requirements of NG-5000.*~~ The stainless steel CRD housings (CRDHs), which are partially core support structures (inside the reactor vessel), serve as the reactor coolant pressure boundary outside the reactor vessel. The CRD housing material is supplied in accordance with ASME Section III Class 1 requirements. The CRDHs are examined and hydrostatically tested to the ASME Section III Class 1 requirements as well as Class CS requirements.

4.5.2.4 Fabrication and Processing of Austenitic Stainless Steel—Regulatory Guide Conformance

STD DEP 4.5-1

Significantly cold-worked stainless steels are not used in the reactor internals except for vanes in the steam dryers; cold work is controlled by applying limits on hardness, bend radii and surface finished on ground surfaces. Furnace sensitized material are not allowed. Electroslag welding is not applied for structural welds. The delta ferrite content for weld materials used in welding austenitic stainless steel assemblies is verified on undiluted weld deposits for each heat or lot of filler metal and electrodes. The delta ferrite content is defined for weld materials as a minimum average ~~*5.0*~~ *Ferrite Number (FN)* ~~*minimum*~~ of 8 ~~*8.0*~~ *FN*, with no individual reading less than 5 FN. ~~*average*~~ *and 20 FN maximum. This ferrite content is considered adequate to prevent any micro fissuring (Hot Cracking) in austenitic stainless steel welds. This procedure complies with the requirements of Regulatory Guide 1.31.*

The limitation placed upon the delta ferrite in austenitic stainless steel castings is 8% minimum and a maximum value of 20%~~*8FN (ferrite number) minimum and a maximum value of 20FN.*~~. *The maximum limit is used for those castings designed for a 60 year life such as the fuel support pieces, in order to limit the effects of thermal aging degradation. Short in-reactor lifetime components such as the fuel tie plates do not require such a limit.*

Proper solution annealing of the 300 series austenitic stainless steel is verified by testing per ASTM A262, "Recommended Practices for Detecting Susceptibility to Intergranular Attack in Stainless Steels." Welding of austenitic stainless steel parts is performed in accordance with Section IX (Welding and Brazing Qualification) and Section II Part C (Welding Rod Electrode and Filler Metals) of the ASME B&PV Code. ~~*Welded austenitic stainless steel assemblies require solution annealing to minimize the possibility of the sensitizing. However, welded assemblies are dispensed from this requirement when there is documentation that welds are not subject to significant sustained loads and assemblies have been free of service failure. Other reasons, in*~~

~~line with Regulatory Guide 1.44, for dispensing with the solution annealing are that (1) assemblies are exposed to reactor coolant during normal operation service which is below 93.3°C temperature or (2) assemblies are of material of low carbon content (less than 0.020%). These controls are employed in order to comply with the intent of Regulatory Guide 1.44.~~

For ABWR, the primary method used to comply with the intent of Regulatory Guide 1.44 is to require low carbon content (<0.020%) for all 300 series stainless steels exposed to high temperature reactor water. Alternately, material use is restricted to low temperature locations (T<93°C). These controls comply with the intent of Regulatory Guide 1.44.

4.5.2.5 Other Materials

STD DEP 4.5-1

Materials, other than Type-300 stainless steel, employed in reactor internals are:

(1) ~~*SA479*~~ *Type XM-19 stainless steel*

(2) ~~*SB166, 167, and 168, Nickel Chrome Iron (Alloy 600)*~~ Niobium modified Alloy 600 per ASME Code Case No. N-580-2

(3) ~~*SA637 Grade 688 Alloy X-750*~~ ASTM B 637 or ASME SB-637, AMS 5542, AMS 5699 UNS N07750 (Alloy X-750) or equivalent

~~*Alloy 600 tubing, plate, and sheet are used in the annealed condition. Bar may be in the annealed or cold drawn condition.*~~ All Nb-modified Alloy 600 is used in the solution annealed condition.

~~*Alloy X-750 components are fabricated in the annealed or equalized condition and aged when required.*~~ *Where maximum resistance to stress corrosion is required,* Alloy X-750 ~~*the material*~~ *is used in the high temperature (*~~*2000*~~1093°C) *annealed plus single aged condition.*

~~*Stellite 6 (or its equivalent) hard surfacing is applied to the austenitic stainless steel HPCF couplings using the gas tungsten arc welding or plasma arc surfacing processes*~~ A hard chromium plating surface is applied to the austenitic stainless steel HPCF couplings.

All materials ~~*, except SA479 Grade XM-19,*~~ *have been successfully used for* at least 25 years in BWR applications. ~~*the past 15 to 20 years in BWR applications.*~~ *Extensive laboratory tests have demonstrated that XM-19 is a suitable material and that it is resistant to stress corrosion in a BWR environment.*

4.5.3 COL License Information

4.5.3.1 CRD Inspection Program

The following standard supplement addresses COL License Information Item 4.4.

CRD condition and integrity are monitored by a routine visual inspection of a selected sample of CRDs during each outage period. The number and selection process for the CRDs is based on vendor recommendations and included in the preventive maintenance program. CRD performance is monitored under the provisions of the Maintenance Rule, and this monitoring coupled with the CRD inspections detects incipient defects before they become serious enough to cause operating problems. The CRD nozzle and bolting are included in the inservice inspection program. CRD bolting is accessible for inservice examinations during normally scheduled CRD maintenance.

4.6 Functional Design of Reactivity Control System

The information in this section of the reference ABWR DCD, including all subsections and figures, is incorporated by reference with the following departures and a supplement.

STD DEP 4.6-1

STD DEP 7.7-1

4.6.1.2 Description

The CRDHS supplies clean, demineralized water which is regulated and distributed to provide charging of the HCU scram accumulators and purge water flow to the FMCRDs during normal operation. The CRDHS is also the source of pressurized water for purging the Reactor Internal Pumps (RIPs) ~~and~~, the Reactor Water Cleanup(CUW) System pumps, and Nuclear Boiler System (NBS) reference leg instrument lines*.*

The CRD System performs the following functions:

(12) (Supplies purge water for the RIPs, ~~and~~ CUW pumps, and NBS reference leg instrument lines*.*

4.6.1.2.3 Hydraulic Control Units

STD DEP 4.6-1

FMCRD friction testing also utilizes a special test fixture connected to the HCU test port. The test fixture contains ~~a small pump and associated~~ hydraulic controls to pressurize the underside of the hollow piston. When the pressure under the hollow piston is high enough to overcome both the combined hollow piston and control rod weight and the drive line friction, the hollow piston will separate from the ball-nut and drift the control rod into the core. Instrumentation measures the pressure under the hollow piston as it is being inserted. The measured pressure is a direct indication of the drive line friction. Water for the test fixture ~~pump~~ is supplied from the CRD pump ~~suction~~ discharge *line via piped connections to test ports located in the HCU rooms*.

4.6.1.2.4 Control Rod Drive Hydraulic Subsystem

The Control Rod Drive Hydraulic Subsystem (CRDHS) supplies water under high pressure to charge the accumulators, to purge the FMCRDs ~~and to purge~~, the Reactor Internal Pumps (RIPs) ~~and~~, the *Reactor Water Cleanup (CUW) System pumps,* and the NBS reference leg instrument lines*. The CRDHS provides the required functions with the pumps, valves, filters, piping, instrumentation and controls shown on the CRD System P&ID (Figure 4.6-8). Duplicate components are included where necessary to assure continuous system operation if an inservice component should require maintenance. For system and component classification, see Section 3.2.*

4.6.1.2.4.1 Hydraulic Requirements

The CRDHS process conditions are shown in Figure 4.6-9. The hydraulic requirements, identified by the function they perform, are:

(4) Approximately 0.03 L/min purge flow is provided to the NBS reference leg instrument lines. The purge flow maintains the RPV water level instrument reference lines filled to address the effects of noncondensible gases in the instrument lines to prevent erroneous reference information after a rapid RPV depressurization event.

4.6.1.2.5.1 Normal Operation

Normal operation is defined as those periods of time when no control rod drives are in motion. Under this condition, the CRD System provides charging pressure to the HCUs and supplies purge water to the control rod drives, RIPs ~~and~~, CUW pumps, and purge water to the NBS reference leg instrument lines.

A multi-stage centrifugal pump (C001) supplies the system with water from the condensate and feedwater system and/or CST. A constant portion of the pump discharge is continuously bypassed back to the CST in order to maintain a minimum flow through the pump. This prevents overheating of the pump if the discharge line is blocked. The total pump flow during normal operation is the sum of the bypass flow, the FMCRD purge water flow through the flow control valve (F010), the RIP purge flow, ~~and~~ the CUW pump purge flow, and NBS reference leg instrument purge flow*. The standby pump provides a full capacity backup capability to the operating pump. It will start automatically if failure of the operating pump is detected by pressure instrumentation located in the common discharge piping downstream of the drive water filters.*

4.6.6.1 CRD and FMCRD Maintenance Procedures During Maintenance

The following standard supplement addresses COL License Information Item 4.5.

Fine motion control rod drive (FMCRD) maintenance procedures prohibit coincident removal of control rod drive (CRD) blade and drive of the same assembly.

Contingency procedures provide for core and spent fuel cooling and mitigative actions during CRD replacement with fuel in the vessel.

These procedures are in accordance with the guidelines in Section 13.5.

4A Typical Control Rod Patterns and Associated Power Distribution for ABWR

The information in this appendix of the reference ABWR DCD, including all subsections, tables, and figures, is incorporated by reference with no departures or supplements.

As required by Section IV.A.3 of the ABWR Design Certification Rule, the plant-specific DCD must physically include the proprietary and safeguards information referenced in the ABWR DCD. Appendix 4A in the reference ABWR DCD references proprietary information in Figures 4A-1a, 4A-1d, 4A-1e, 4A-2a, 4A-2d, 4A-2e, 4A-3a, 4A-3d, 4A-3e, 4A-4a, 4A-4d, 4A-4e, 4A-5a, 4A-5d, 4A-5e, 4A-6a, 4A-6d, 4A-6e, 4A-7a, 4A-7d, 4A-7e, 4A-8a, 4A-8d, 4A-8e, 4A-9a, 4A-9d, 4A-9e, 4A-10a, 4A-10d, 4A-10e, 4A-11a, 4A-11d, 4A-11e, 4A-12a, 4A-12d,4A-12e, 4A-13a, 4A-13d, and 4A-13e. That proprietary information is provided in COLA Part 10, has finality in accordance with Section VI.B.2 of the ABWR Design Certification Rule, and does not constitute a supplement to or departure from the reference ABWR DCD.

4B Fuel Licensing Acceptance Criteria

The information in this appendix of the reference ABWR DCD, including all subsections and tables, is incorporated by reference with no departures or supplements.

As required by Section IV.A.3 of the ABWR Design Certification Rule, the plant-specific DCD must physically include the proprietary and safeguards information referenced in the ABWR DCD. That proprietary information is provided in COLA Part 10, has finality in accordance with Section VI.B.2 of the ABWR Design Certification Rule, and does not constitute a supplement to or departure from the reference ABWR DCD.

4C Control Rod Licensing Acceptance Criteria

The information in this appendix of the reference ABWR DCD, including all subsections, is incorporated by reference with the following standard departure.

STD DEP Admin

4C.3.4 Reactivity

The reactivity worth of the control rod is determined by the initial amount and type of absorber material and irradiation depletion. Scram time insertion performance ~~and control rod drop times~~ affects the total reactivity inserted into the core. All of these effected must be included in the plant core analyses including nuclear, abnormal operational occurrences, infrequent events, and accidents. The reactivity worth of the rod must provide, under conditions of normal operation (including abnormal operational occurrences), appropriate margin for malfunctions, such as two stuck control rods or accidental control rod withdrawal, without exceeding specified acceptable fuel design limits.

4D Reference Fuel Design Compliance with Acceptance Criteria

The information in this appendix of the reference ABWR DCD, including all subsections and tables, is incorporated by reference.

As required by Section IV.A.3 of the ABWR Design Certification Rule, the plant-specific DCD must physically include the proprietary and safeguards information referenced in the ABWR DCD. The proprietary information that is referenced in the reference DCD is provided in COLA Part 10. This material has finality in accordance with Section VI.B.2 of the ABWR Design Certification Rule, and does not constitute a supplement to or departure from the reference ABWR DCD.

5.0 Reactor Coolant System and Connected Systems

5.1 Summary Description

The information in this section of the reference ABWR DCD, including all subsections and figures, as modified by the STP Nuclear Operating Company Application to Amend the Design Certification rule for the U.S. Advanced Boiling Water Reactor (ABWR), "ABWR STP Aircraft Impact Assessment (AIA) Amendment Revision 3," dated September 23, 2010 is incorporated by reference with the following departures.

STD DEP 5.4-1

Figure 5.1-3 Nuclear Boiler System P&ID (Sheet 4 of 11)

STD DEP 5.4-1 (Figure 5.1-3)

CUW piping pressure change to be consistent with Table 5.4-6 is incorporated in Figure 5.1-3 Nuclear Boiler System P&ID (Sheet 4 of 11) in Chapter 21.

STD DEP 5.4-5 (Figure 5.1-3)

STD DEP 7.3-6 (Figure 5.1-3)

Figure 5.1-3 Nuclear Boiler System P&ID (Sheet 2) is incorporated in Chapter 21.

This figure is modified to reflect STD DEP 7.3-6, change in SRV Position Indication from LVDTs to limit switches.

STD DEP 7.3-11

Figure 5.1-3 Nuclear Boiler System P&D (Sheets 1-11) is incorporated in Chapter 21.

Changes are made to Sheets 2 and 4 to reflect DEP 7.3-11, Leak Detection and Isolation System Value Leakage Monitoring.

STP DEP 10.1-3 (Figure 5.1-1)

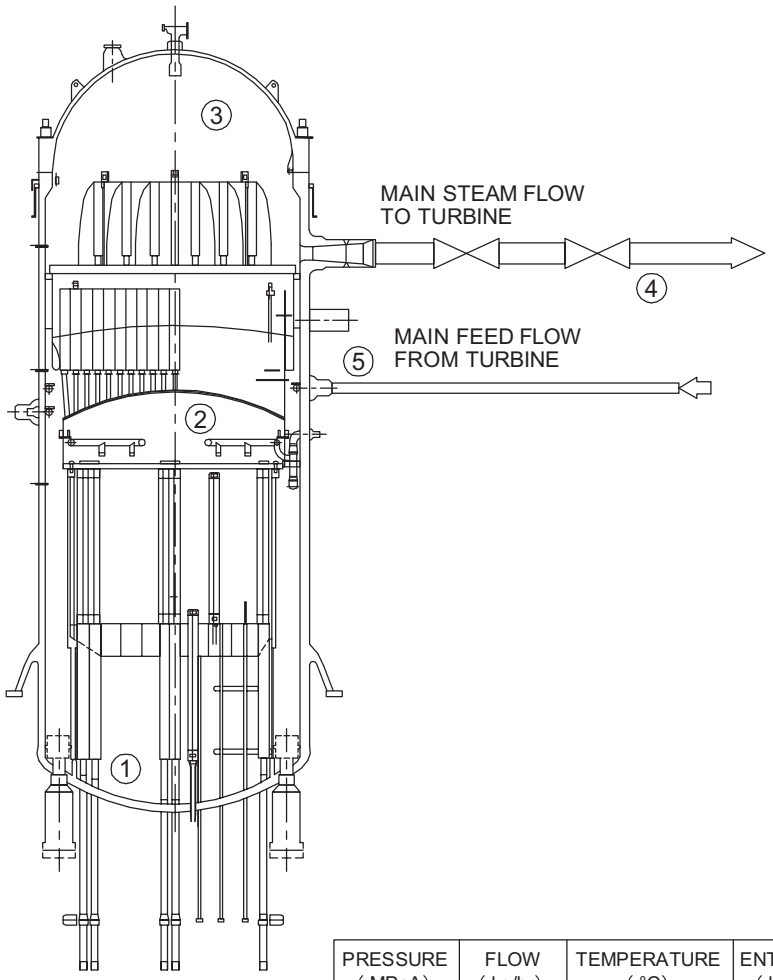

	PRESSURE (MPaA)	FLOW (kg/hr)	TEMPERATURE (°C)	ENTHALPY (kJ/kg)
1 CORE INLET	7.4	52.2×10^6	278	1227
2 CORE OUTLET	7.2	52.2×10^6	288	1500
3 SEPARATOR OUTLET (STEAM DOME)	7.2	7.65×10^6	287	2769
4 STEAMLINE (2ND ISOLATION VALVE)	6.9	7.65×10^6	285	2769
5 FEEDWATER INLET (INCLUDES CLEANUP RETURN FLOW)	7.3	7.78×10^6	216	926

Figure 5.1-1 Rated Operating Conditions of the ABWR

5.2 Integrity of Reactor Coolant Pressure Boundary

The information in this section of the reference ABWR DCD, including all subsections, tables, and figures, is incorporated by reference with the following departures and supplements.

STD DEP T1 2.3-1 (Table 5.2-6, Table 5.2-7, Figure 5.2-8)

STD DEP T1 2.4-2 (Table 5.2-6, Table 5.2-7)

STD DEP T1 2.14-1 (Table 5.2-6, Figure 5.2-8)

STD DEP 1.8-1 (Table 5.2-1 and Table 5.2-1a)

STD DEP 4.5-1 (Table 5.2-1 and Table 5.2-4)

STD DEP 5.2-2

STD DEP 5A-1 (Table 5.2-9)

STD DEP 7.3-11 (Figure 5.2-8)

STD DEP 7.3-12

STD DEP Vendor

STD DEP Admin

5.2.2.10 Inspection and Testing

STD DEP Vendor

The valves are installed as received from the factory. The ~~GE~~ equipment specification requires certification from the valve manufacturer that design and performance requirements have been met. This includes capacity and blowdown requirements. The setpoints are adjusted, verified, and indicated on the valves by the vendor. Specified manual and automatic initiated signals for power actuation (relief mode) of each SRV are verified during the preoperational test program.

5.2.3.2.2.3 Source of Impurities

STD DEP Admin

Condenser tubes and tube sheet~~s~~ materials *are ~~required to be made of titanium alloys~~* specified in subsection 10.4.1.2.3.

5.2.3.2.3 Compatibility of Construction Materials with Reactor Coolant

STD DEP 4.5-1

The construction materials exposed to the reactor coolant consist of the following:

(1) Solution-annealed austenitic stainless steels (both wrought and cast), Types 304, 304L, 316~~LN~~, 316L, ~~and~~ XM-19, CF3, CF3A and CF3M*.*

(2) Nickel-based alloy (including Niobium Modified Alloy *600 and X-750) and alloy steel.*

5.2.4 Preservice and Inservice Inspection and Testing of Reactor Coolant Pressure Boundary

STD DEP Vendor

*The design to perform preservice inspection is based on the requirements of ASME Code Section XI. The development of the preservice and inservice inspection program plans is based on ASME Code Section XI, Edition and Addenda specified in accordance with 10CFR50, Section 50.55a. For design certification, ~~GE~~*Toshiba *is responsible for designing the reactor pressure vessel for accessibility to perform preservice and inservice inspection. Responsibility for designing other components for preservice and inservice inspection is the responsibility of the COL applicant. The COL applicant will be responsible for specifying the Edition of ASME Code Section XI to be used, based on the procurement date of the component per 10CFR50, Section 50.55a. The ASME Code requirements discussed in this section for preservice and inservice inspection are based on the edition of ASME Code Section XI specified in Table 1.8-21.*

5.2.4.2.2 Piping, Pumps, Valves and Supports

STD DEP 5.2-2

Straight sections of pipe and spool pieces shall be added between fittings. The minimum length of the spool piece has been determined by using the formula L = 2T + 152 mm, where L equals the length of the spool piece (not including weld preparation) and T equals the pipe wall thickness. Where less than the minimum straight section length is used, an evaluation is performed to ensure that sufficient access exists to perform the required examinations.

5.2.4.3.1 Examination Categories

STD DEP 5.2-2

For the preservice examination, all of the items selected for inservice examination shall be performed once in accordance with ASME Code Section XI, Subsection IWB-2200, including essentially 100% of the pressure retaining welds in all Class 1 components, *with the exception of the examinations specifically excluded by ASME Code Section XI from preservice requirements, such as* surface or volumetric examinations of welds in lines smaller than NPS 1, volumetric examinations of welds in lines smaller than NPS 4, *VT-3 examination of valve body and pump casing internal surfaces (B-L-2 and B-M-2 examination categories, respectively) and the visual VT-2 examinations for categories B-E and B-P*. If the as-built design incorporates external Category B-O control rod drive housing welds, the preservice examination shall be extended to

include 100% of the welds in the installed peripheral control rod drive housings only in accordance with IWB-2200.

5.2.4.3.2.1 Ultrasonic Examination of the Reactor Vessel

STD DEP 5A-1

~~*The GE Reactor Vessel Inspection System (GERIS) meets the detection and sizing requirements of Regulatory Guide 1.150, as cited in Table 5.2-9. Inner radius examinations are performed from the outside of the nozzle using several compound angle transducer wedges to obtain complete coverage of the required examination volume. Electronic gating used in the GERIS records up to eight different reflectors simultaneously to assure that all relevant indications are recorded. Appendix 5A demonstrates compliance with Regulatory Guide 1.150.*~~ The ultrasonic system for examination of the reactor vessel meets the qualification requirements discussed in Subsection 5.2.4.3.4.

5.2.5.1.1 Detection of Leakage Within Drywell

STD DEP T1 2.4-2

STD DEP 7.3-11

The detection of small identified leakage within the drywell is accomplished by monitoring drywell equipment drain sump pump activity and sump level increases. The equipment drain sump level monitoring instruments will activate an alarm in the control room when the ~~identified~~ total *leak rate reaches ~~95~~* 114 *liters/min.*

Equipment drain sump pump activity and sump level increases will be caused primarily from leaks from large process valves through valve stem drain lines.

The determination of the source of other identified leakage within the drywell is accomplished by (1) monitoring the reactor vessel head seal drain line pressure, (2) ~~monitoring temperature in the valve stem seals drain line to the equipment drain sump, and~~ NOT USED *(3) monitoring temperature in the SRV discharge lines to the suppression pool to detect leakage through each of the SRVs. All of these monitors continuously indicate and/or record in the control room and will trip and activate an alarm in the control room on detection of leakage from monitored components.*

Excessive leakage inside the drywell (e.g., process line break or loss-of-coolant accident) is detected by high drywell pressure, low reactor water level, or high steamline flow (for breaks downstream of the flow elements). The instrumentation channels for these variables will trip when the monitored variable exceeds predetermined limits to activate an alarm and trip the isolation logic, which will close appropriate isolation valves.

The alarms, indication and isolation trip functions performed by the foregoing leak detection methods are summarized in Tables 5.2-6 and 5.2-7.

Listed below are the variables monitored for detection of leakage from piping and equipment located within the drywell:

(1) High drywell temperature

~~(2) High temperature in the valve stem seal (packing) drain lines~~ NOT USED

(3) High flow rate from the drywell floor and equipment drain sumps

(4) High steamline flow rate (for leaks downstream of flow elements in main steamline and RCIC steamline)

(5) High drywell pressure

(6) High fission product releases

(7) Reactor vessel low water level

(8) Reactor vessel head seal drain line high pressure

(9) SRV discharge piping high temperature

(10) Feedwater lines pressure difference

5.2.5.1.2 Detection of Leakage External to Drywell

STD DEP T1 2.3-1

(2) ~~(1)~~ Within steam tunnel (between primary containment and turbine building):

(a) ~~High radiation in main steamlines (steam tunnel)~~ NOT USED

5.2.5.2.1 Leak Detection Instrumentation and Monitoring Inside the Drywell

STD DEP T1 2.4-2

STD DEP 7.3-11

STD DEP 7.3-12

(1) Drywell Floor Drain Sump Monitoring

The drywell floor drain sump collects unidentified leakage such as leakage from control rod drives, floor drains, valve flanges, closed cooling water for reactor services (e.g., RIP motor cooling), condensate from the drywell atmospheric coolers, and any leakage not connected to the drywell equipment drain sump. The sump is equipped with two pumps and special instrumentation to measure sump fillup and pumpout times and provide continuous sump level rate of change monitoring with control room indication and alarm capabilities for excessive fill rate or pumpout frequency of the pumps. The drain sump instrumentation has a sensitivity of detecting reactor

coolant leakage of 3.785 liter/min within a 60 minute period. The alarm setpoint has an adjustable range up to 19 liters/min for the drywell floor drain sump. In order to provide early warning of RCS leakage to the operators, a computer based control room alarm is provided that requires operator action with an 8 L/min increase in unidentified leakage over four hours.

(2) Drywell Equipment Drain Sump Monitoring

*The drywell equipment drain sump collects only identified leakage from identified leakage sources. This sump monitors leakage from ~~valve stem packings,~~*the *RPV head flange seal~~,~~ and other known leakage sources which are piped directly into the drywell equipment drain sump.*

(10) ~~*(1) Valve Stem Packing Leakage Monitoring*~~ NOT USED

~~*Large (two inch or larger) remote power operated valves located in the drywell for the Nuclear Boiler, Reactor Water Cleanup, Reactor Core Isolation Cooling, and Residual Heat Removal Systems are fitted with drain lines from the valve stems, from between the two sets of valve steam packing. Leakage through the inner packing is carried to the drywell equipment drain sump. Leakage during hydro-testing may be observed in drain line sight glasses installed in each drain line. Also, each drainline is equipped with temperature sensors for detecting leakage. A remote-operated solenoid valve on each line may be closed to shut off the leakage flow through the first seal in order to take advantage of the second seal, and may be used during plant operation, in conjunction with the sump instrumentation, to identify the specific process valve which is leaking.*~~

(14) Feedwater Lines Pressure Difference

The Feedwater lines are monitored for excessive pressure differences that would indicate a break has occurred in one of the lines. Four channels are provided. A confirmatory high drywell pressure signal is also needed to initiate a trip of condensate pumps.

5.2.5.2.2 Leak Detection Instrumentation and Monitoring External to Drywell

STD DEP T1 2.3-1

~~*(6)*~~ ~~*Main Steamline Radiation Monitoring*~~ NOT USED.

~~*Main steamline radiation is monitored by gamma sensitive radiation monitors of the Process Radiation Monitoring System (PRMS). The PRMS provide four divisional channel trip signals to the LDS to close all MSIVs and the MSL drain valves upon detection of high radiation in the main steamline tunnel area. A reactor trip (scram) is also initiated by the same PRMS channel trip signals. The PRMS trip signals are also used to shutdown the main condenser mechanical vacuum pump and isolate its discharge line. The detectors are geometrically arranged to detect significant increases in*~~

~~radiation level with any number of main steamlines in operation. Control room indications and alarms are provided by the PRM System.RCIC Steamline Pressure Monitors.~~

5.2.5.4.1 Total Leakage Rate

STD DEP 7.3-12

The total reactor coolant leakage rate consists of all leakage (identified and unidentified) that flows to the drywell floor drain and equipment drain sumps. The total leakage rate limit is well within the makeup capability of the RCIC System (182 m^3/h). The total reactor coolant leakage rate limit is established at ~~95~~ 114 liters/min. ~~The identified and unidentified leakage rate limits are established at 95 liters/min and 3.785 liters/min, respectively.~~

The total leakage rate limit is established low enough to prevent overflow of the sumps. The equipment drain sumps and the floor drain sumps, which collect all leakage, are each pumped out by two 10 m^3/h pumps.

If either the total or unidentified leak rate limit is exceeded, an orderly shutdown shall be initiated and the reactor shall be placed in a cold shutdown condition within ~~24~~ 36 hours.

5.2.5.4.2 Identified Leakage Inside Drywell

STD DEP 7.3-11

The ~~valve stem packing of large power-operated valves, the~~ reactor vessel head flange seal and other seals in systems that are part of the reactor coolant pressure boundary, and from which normal design identified source leakage is expected, are provided with leakoff drains. The ~~nuclear system valves inside the drywell and the~~ reactor vessel head flange ~~are~~is equipped with double seals. The leakage from ~~the inner valve stem packings and from~~ the reactor vessel head flange inner seal, which discharges to the drywell equipment drain sump, ~~are~~is measured during plant operation.

5.2.5.5.1 Unidentified Leakage Rate

STD DEP 7.3-12

The unidentified leakage rate is the portion of the total leakage rate received in the drywell sumps that is not identified as previously described. ~~A threat of significant compromise to the nuclear system process barrier exists if the barrier contains a crack that is large enough to propagate rapidly (critical crack length).~~ The unidentified leakage rate limit must be low because of the possibility that most of the unidentified leakage rate might be emitted from a ~~single crack~~ break in the nuclear system process barrier.

An allowance for leakage that does not compromise barrier integrity and is not identifiable is established for normal plant operation.

The unidentified leakage rate limit is established at ~~3.785~~ 19 liters/min to allow time for corrective action before the process barrier could be significantly compromised. ~~This unidentified leakage rate is a small fraction of the calculated flow from a critical crack in a primary system pipe (Appendix 3E).~~

5.2.5.5.2 Margins of Safety

STD DEP 7.3-12

The margins of safety for a detectable flaw to reach critical size are presented in Subsection 5.2.5.5.3. ~~Figure 3E-22 shows general relationships between crack length, leak rate, stress, and line size using mathematical models.~~

5.2.5.9 Regulatory Guide 1.45: Compliance

STD DEP 7.3-12

The Limiting unidentified leakage to ~~3.785~~ 19 liters/min and identified total *leakage to ~~95~~ 114 liters/min satisfies Position C.9.*

5.2.6 COL License Information

5.2.6.1 Conversion of Indications

The following site-specific supplement addresses COL License Information Item 5.1.

Surveillance procedures convert the drywell leakage indications into a common leakage equivalent for unidentified and identified leakage to ensure that leakage requirements in the Technical Specifications are met.

There are four drywell leakage detection indications:

(1) Drywell floor drain sump monitoring system – The surveillance procedure measures the levels in various leakage collection tanks over prescribed time frames and converts these levels into a leakage rate.

(2) Airborne particulate channel of the drywell fission products monitoring system – The surveillance procedure converts the instantaneous detected radiation level into a leakage rate equivalent.

(3) Gaseous radioactivity channel of the drywell fission products monitoring system – The surveillance procedure converts the instantaneous detected radiation level into a leakage rate equivalent.

(4) Drywell air cooler condensate flow monitoring system – The surveillance procedure measures the flow rate in the drain line and converts this value to a leakage rate.

The surveillance procedures use the measured leakage rates from each of these monitors to determine a total unidentified leakage rate. The conversion of the information from the four leakage detection systems to a total leakage rate is

accomplished by computerized programs. The drywell floor drain sump monitor, airborne particulates monitor, and drywell air cooler condensate flow monitor are capable of detecting leakage rates as low as 3.785 liters/min. The procedures include direction to the operators on actions to be taken before the TS limit is reached.

5.2.6.2 Plant-Specific ISI/PSI

The following standard supplement address COL License Information Item 5.2.

The ISI/PSI program will be based on the 2004 ASME Boiler and Pressure Vessel Code Section XI, no addenda (as identified on Table 1.8-21). This code will be used for selecting components for examinations, identifying components subject to examination, a description of the components exempted from examination by applicable code, and isometric drawings used for examination. NRC requirements for performance demonstration of ultrasonic examination of reactor pressure vessels for preservice and inservice inspections, once addressed by Regulatory Guide 1.150 will be conducted in accordance with ASME Boiler and Pressure Vessel Code Section XI, Appendix VIII as required by 10 CFR 50.55a. Ultrasonic examination systems shall be qualified in accordance with ASME Boiler and Pressure Vessel Code Section XI, Appendix VIII and ultrasonic examination shall be conducted in accordance with ASME Boiler and Pressure Vessel Code Section XI, Appendix I. ASME Boiler and Pressure Vessel Code Section XI, Appendices I and VIII address near surface examination and surface resolution including the use of electronic gating as well as internal surface examination. Code cases are listed in Table 5.2-1. Any additional relief requests shall be submitted with a supporting technical justification if needed.

The PSI/ISI program for reactor coolant pressure boundary is described in Section 5.2.4 and Table 5.2-8.This COL License Information Item is addressed by the commitment to provide a comprehensive site-specific PSI and ISI program plan to the NRC at least 12 months prior to respective unit commercial power operation as discussed in Subsection 6.6.9.1. (COM 6.6-1)

5.2.6.3 Reactor Vessel Water Level Instrumentation

The following standard supplement addresses COL License Information Item 5.3.

The Reactor Vessel Water Level Instrumentation backfill water flow is supplied from the Control Rod Drive (CRD) system to the reactor water level instrumentation leg to prevent potential formation of gas pocket (large bubbles) in the reference leg. The impact of non-condensable gases on the accuracy of reactor vessel level measurements is considered in the system design. The CRD system provides a process flow of approximately 4 L/min and is based on the results of BWR Owners Group testing in response to NRC Bulletin 93-03. This flow value is confirmed during preoperational testing in accordance with FSAR Subsection 14.2.12.16(3)(d).

Table 5.2-1 Reactor Coolant Pressure Boundary Components Applicable Code Cases

Number	Title	Applicable Equipment	Remarks
[N-60-5	***(33)***	***Core Support***	**Accepted per RG 1.84**
~~*[N-71-15*~~	~~*(1)*~~	~~*Component Support]**~~	~~*1.85*~~
*[N-71-~~17~~***18**	***(1)***	***Component Support]****	**Conditionally Accepted per RG 1.84**
*[N-122-**2***	*(2)*	*Piping]**	Accepted per RG 1.84
[N-247	*(3)*	*Component Support]**	Accepted per RG 1.84
~~*[N-249-9*~~ **[N-249-14**	*(4)*	*Component Support]**	Conditionally Accepted per RG ~~*1.85*~~ **1.84**
[N-309-1	*(5)*	*Component Support]**	Accepted per RG 1.84
[N-313	*(6)*	*Piping]**	Accepted per RG 1.84
[N-316	*(7)*	*Piping]**	Accepted per RG 1.84
~~*[N-318-3*~~ ***[N-318-5***	*(8)*	*Piping]**	~~*Conditionally*~~ Accepted per RG 1.84
~~*[N-319*~~	~~*(9)*~~	~~*Piping]**~~	~~*Accepted per RG 1.84*~~
[N-319-3	**(9)**	**Piping]***	**Accepted per RG 1.84**
*[N-391-**2***	*(10)*	*Piping]**	Accepted per RG 1.84
*[N-392-**3***	*(11)*	*Piping]**	Accepted per RG 1.84
[N-393	*(12)*	*Piping]**	Accepted per RG 1.84
[N-411-1	*(13)*	*Piping]**	Conditionally Accepted per RG 1.84
[N-414	*(14)*	*Component Support]**	Accepted per RG 1.84
[N-430	*(15)*	*Component Support]**	Accepted per RG 1.84
N-236-1	(16)	Containment	Conditionally Accepted Per RG 1.147
~~*N-307-1*~~ **N-307-2**	(17)	RPV Studs	Accepted per RG 1.147
N-416-**3**	(20)	Piping	Accepted Per RG 1.147
N-432	(21)	Class 1 Components	Accepted Per RG 1.147
N-435-1	(22)	Class 2 Vessels	Accepted Per RG 1.147
N-457	(23)	Bolt and Studs	Accepted Per RG 1.147
N-463-**1**	(24)	Piping	Accepted Per RG 1.147
N-460	(25)	Class 1 & 2 Components and Piping	Accepted Per RG 1.147
N-472	(26)	Pumps	Accepted Per RG 1.147

Table 5.2-1 Reactor Coolant Pressure Boundary Components Applicable Code Cases (Continued)

Number	Title	Applicable Equipment	Remarks
[N-476	*(26a)*	*Component Support]**	**Accepted per RG 1.84**
N-479-**1**	(27)	Main Steam System	~~*Not Listed in*~~ **Accepted per** RG 1.147
N-491	(28)	Component Supports	~~*Not Listed in*~~ **Accepted per** RG 1.147
N-496	(29)	Bolts and Studs	~~*Not Listed in*~~ **Accepted per** RG 1.147
N-580-2	**(30)**	**RPV, Reactor Internals, etc**	**Approved by ASME Standards Committee (2008)**
N-608	**(31)**	**Use of Applicable Code Edition and Addenda, NCA-1140(a)(2)**	**Accepted per RG 1.84**
N-613-1	**(32)**	**Reactor Vessel**	**Accepted per RG 1.147**
N-632	**(34)**	**Containment**	**Accepted per RG 1.84**

Table 5.2-1a Reactor Coolant Pressure Boundary Components Applicable Code Cases (Continued)

(30)	Use of Alloy 600 (UNS N066000) with Columbium added, Section III, Div. 1 (SC III File #N96-44) (MC97-86)
(31)	Applicable Code Edition and Addenda, NCA-1140(a)(2), Section III, Division 1
(32)	UT Exam of Penetration Nozzles in Vessels, Category B-D, Item Nos. B3.10 and B3.90, Reactor Nozzle to Vessel Welds, Figs. IWB 2500-7(a), (b), (c), Section XI, Division 1
(33)	Material for Core Support Structures, Section III, Division 1
(34)	Use of ASTM A 572, Grades 50 and 65 for Structural Attachments to Class CC Containment Liners, Section III, Division 2.

Table 5.2-4 Reactor Coolant Pressure Boundary Materials

Component	Form	Material	Specification (ASTM/ASME)
Main Steam Isolation Valves			
Valve Body	Cast	Carbon steel	SA352 LCB
Cover	Forged	Carbon Steel	SA350LF2
Poppet	Forged	Carbon Steel	SA350LF2
Valve stem	Rod	~~*17-4 ph*~~ **Precipitation Hardened Stainless Steel**	SA 564 630 (H1100)
Body bolt	Bolting	**Low-**Alloy steel	SA 540 B23 CL4 or 5
Hex nuts	Bolting Nuts	**Low-**Alloy steel	SA 194 GR7
Main Steam Safety/Relief Valve			
Body	Forging or Casting	Carbon steel Carbon steel	ASME SA 350 LF2 ASME SA 352 LCB
Bonnet (yoke)	Forging or Casting	Carbon steel Carbon steel	ASME SA 350 LF2 ASME SA 352 LCB
Nozzle (seat)	Forging or Casting	Stainless steel or Carbon steel	ASME SA 182 Gr F316 or SA351 CF3 or CF 3M ASME SA 350 LF2 or SA 352 LCB
Body to bonnet stud	~~*Bar/rod*~~ **Bolting**	Low-Alloy steel	ASME SA 193 Gr B7
Body to bonnet nut	~~*Bar/rod*~~ **Bolting Nuts**	**Low-**Alloy steel	ASME SA 194 Gr 7
Disk	Forging or Casting	~~*Alloy steel NiCrfe*~~ **NiCrFe** Alloy Stainless steel	ASME ~~*SA*~~**SB** 637 Gr 718 ASME SA 351 CF 3A
Spring washer &	Forging	Carbon steel	ASME SA 105
Adjusting Screw or	**Bolting**	Alloy steel	ASME SA 193 Gr B6 (Quenched + tempered or normalized & tempered)
Setpoint adjustment assembly	Forgings	Carbon and alloy steel parts	Multiple specifications

Table 5.2-4 Reactor Coolant Pressure Boundary Materials (Continued)

Component	Form	Material	Specification (ASTM/ASME)
Spindle (stem)	Bar	Precipitation-hardened **stainless** steel	ASTM A564 Type 630 (H 1100)
Spring	Wire or Bellville washers	Steel Alloy Steel	ASTM A304 Gr 4161 N 45 Cr Mo V67
Main Steam Piping (between RPV and the turbine stop valve)			
Pipe	Seamless	Carbon steel	ASME SA 333 Gr. 6
Contour nozzle **250A** 10.36 MpaG	Forging	*Carbon* steel	ASME SA *350 LF 2*
Large groove flange	Forging	Carbon steel	ASME SA 350 LF 2
50A special nozzle	Forging	Carbon steel	ASME SA 350 LF2
Elbow	Seamless	Carbon steel	ASME SA 420
Head fitting/penetration piping	Forging	Carbon steel	ASME SA 350 LF2
Feedwater Piping (between RPV and the seismic interface restraint)			
Pipe	Seamless	Carbon steel	ASME SA 333 Gr. 6
Elbow	Seamless	Carbon steel	ASME SA 420
Head fitting/penetration piping	Forging	Carbon steel	ASME SA 350 LF2
Nozzle	Forging	Carbon steel	ASME SA 350 LF2
Recirculation Pump Motor Cover			
Bottom flange (cover)	Forging	**Low-**Alloy steel	ASME SA 533 Gr. B Class 1 or SA 508 Class 3
Stud	Bolting	**Low-**Alloy steel	ASME SA 540 CL.3 Gr.B24 or SA 193, B7
Nut	Bolting **Nuts**	**Low-**Alloy steel	ASME SA 194 Gr. 7
CRD			
Middle flange	Forging	Stainless steel	SA 182**/182M**, F304L***,** **F304*,F**316L* **or F316*, or SA 336/336M, F304* or F316***
Spool piece	Forging	Stainless steel	SA 182**/182M**, F304L* **, F304*F**316L***, or SA 336/336M, F304* or F316***

Table 5.2-4 Reactor Coolant Pressure Boundary Materials (Continued)

Component	Form	Material	Specification (ASTM/ASME)
Mounting bolts	~~*Bar*~~ **Bolting**	**Low-**Alloy steel	~~*SA-194*~~ **SA-193/193M Grade** B7
Seal housing	Forging	Stainless steel	SA 182**/182M**, F304L* **, F304*F**316L* **or F316***, **or SA 336/336M, F304* or F316***
Seal housing nut	Bar	Stainless steel	SA 564, ~~*17-4PH*~~ **630**(H1100)
Reactor Pressure Vessel			
Shells and Heads	Plate	**Low-Alloy steel** ~~*Mn-1/2 Mo-1/2 Ni*~~	SA-533, Type B, Class 1
	Forging	~~*¾ Ni-1/2 Mo-Cr-V*~~ Low alloy steel	SA-508, Class 3
Shell and Head Flange	Forging	~~*¾ Ni-1/2 Mo-Cr-V*~~ Low alloy steel	SA-508 Class 3
Flanged Nozzles	Forging	~~*C-Si*~~ Low alloy steel	SA-508 Class 3
Drain Nozzles	Forging	~~*C-Si*~~ Carbon steel **or Stainless steel**	SA-508 Class 1 **or SA 182, F316L* or F316* SA-336, F316***
Appurtenances/Instrumentation Nozzles	Forging	~~*Cr-Ni-Mo*~~ Stainless steel	SA-182, Grade F316L* or ~~*F316*‡*~~ **F316*** or SA-336, ~~*Class F316L* or F316*‡*~~ **Class F316***
	Bar, Smls. Pipe	Ni-Cr-Fe (UNS N06600)	~~*SB-166*‡ or SB-167*‡*~~ **Code Case N-580-2**
Stub Tubes	Forging	Ni-Cr-Fe (UNS N06600)	~~*SB-564*‡*~~ **Code Case N-580-2**
	Bar, Smls. Pipe	Ni-Cr-Fe (UNS N06600)	~~*SB-166*‡ or SB-167*‡*~~ **Code Case N-580-2**

* Carbon content is maximum 0.020%.
~~*† Carbon content is maximum 0.020% and nitrogen from 0.060 to 0.120%.*~~
~~*‡ Added niobium content is 1 to 4%.*~~

Table 5.2-6 LDS Control and Isolation Function vs. Monitored Process Variables

Monitored Variables / LDS Control & Isolation Functions	Reactor Water Level Low	Turbine Inlet SL Press Low	Reactor Pressure High	MSL Flow Rate High	~~MSL Radiation High~~	MSL Tunnel Amb. Temp High	Turbine Area Amb. Temp High	Main Condenser Vacuum Low	Drywell Pressure High	RHR Equip Area Temp High	RCIC Equip Area Temp High	RCIC SL Pressure Low	RCIC SL Flow Rate High	RCIC Vent Exhaust Press High	CUW Equip Area Temp High	CUW Differential Flow High	SLCS Pumps Running	LCW Drain Line Radiation High	HCW Drain Line Radiation High	R/B HVAC Exhaust Air Rad High	F/H Exhaust Air Rad High	**FW Line Pressure Difference**
MSIVs & MSL Drain Line Valves	L1.5	X		X	~~X~~	X	X	X														
CUW Process Lines Isolation	L2		X*			X									X	X	X					
RHR S/C PCV Valves	L3		X							X												
RCIC Steamline Isolation											X	X	X	X								
ATIP Withdrawal	L3								X													
DW RAD Sampling Isolation	L2								X													
SPCU Process Line Isolation	L3								X													
DW LCW Sump Drain Line Isolation	L3								X									X				
DW HCW Sump Drain Line Isolation	L3								X										X			
RCW PCV Valves Isolation	L1								X													
HNCW PCV Valves Isolation	L1								X													
AC System P&V Valves Isolation	L3								X											X	X	
~~FCS PCV Valves Isolation~~	~~L3~~								~~X~~													
R/B HVAC Air Ducts Isolation	L3								X											X	X	
SGTS Initiation	L3								X											X	X	
Condensate Pump Trip **									**X**													**X**

* *Head spray valve only*
** **Both signals must be present**

Table 5.2-7 Leakage Sources vs. Monitored Trip Alarms

Leakage Source	Monitored Plant Variable Location		Reactor Vessel Water Level Low	Drywell Pressure High	DW Floor Drain Sump High Flow	DW Equip Drain Sump High Flow	DW Fission Products Radiation High	Drywell Temperature High	SRV Discharge Line Temperature High	Vessel Head Flange Seal Pressure High	RB Eq/Fl Drain Sump High Flow	DW Air Cooler Condensate Flow High	MSL or RCIC Steamline Flow High	MSL Tunnel or TB Ambient Area Temp High	Equip Areas Ambient or Diff Temp High	CUW Differential Flow High	~~MSL Tunnel Radiation High~~	Inter-System Leakage (Radiation) High	**Feedwater Line Differential Pressure High**
Main Steamlines	I		X	X	X		X	X	X			X	X						
		O	X								X		X	X	X		✗		
RCIC Steamline	I		X	X	X		X	X				X	X						
		O	X								X		X		X				
RCIC Water	I																		
		O									X				X				
RHR Water	I		X	X	X		X	X				X							
		O									X				X			⊗	
HPCF Water	I		X	X	X		X	X				X							
		O									X				X				
CUW Water	I		X	X	X		X	X				X							
		O	X								X			X	X	X		⊗	**X**
Feedwater	I		X	X	X		X	X				X							
		O									X			X					**X**
Recirc Pump Motor Casing	I			X	X		X	X				X						⊗	
		O																	

Table 5.2-7 Leakage Sources vs. Monitored Trip Alarms

Leakage Source	Monitored Plant Variable Location		Reactor Vessel Water Level Low	Drywell Pressure High	DW Floor Drain Sump High Flow	DW Equip Drain Sump High Flow	DW Fission Products Radiation High	Drywell Temperature High	SRV Discharge Line Temperature High	Vessel Head Flange Seal Pressure High	RB Eq/Fl Drain Sump High Flow	DW Air Cooler Condensate Flow High	MSL or RCIC Steamline Flow High	MSL Tunnel or TB Ambient Area Temp High	Equip Areas Ambient or Diff Temp High	CUW Differential Flow High	~~MSL Tunnel Radiation High~~	Inter-System Leakage (Radiation) High	**Feedwater Line Differential Pressure High**
Reactor Vessel Head Seal	I					X				X									
		O																	
Valve Stem Packing	I					X													
		O									X								
Miscellaneous Leaks	I				X			X											
		O									X							Ⓧ	

I = Inside Drywell Leakage
O = Outside Drywell Leakage
Ⓧ = Reactor coolant leakage in cooling water to RHR Hx, RIP Hx, CUW Non-regen Hx's or to FP cooling Hx.

Table 5.2-9 ~~*Ultrasonic Examination of RPV: Reg. Guide 1.150 Compliance*~~

NOT USED

The following figure is located in Chapter 21:

Figure 5.2-8, Leak Detection and Isolation System IED (Sh. 1-10)

This figure is revised due to departure STD DEP 2.3-1, STD DEP T1 2.14-1, and STD DEP 7.3-11

5.3 Reactor Vessel

The information in this section of the reference ABWR DCD, including all subsections and figures, is incorporated by reference with the following departures and supplements.

STD DEP T1 2.1-2

STD DEP 5.3-1

STD DEP Vendor

STD DEP Admin

5.3.1.2 Special Procedures Used for Manufacturing and Fabrication

STD DEP Vendor

All fabrication of the RPV is performed in accordance with ~~GE~~Vendor-approved drawings, fabrication procedures, and test procedures. The shells and vessel heads are made from formed plates or forgings, and the flanges and nozzles from forgings. Welding performed to join these vessel components is in accordance with procedures qualified per ASME Code Section III and IX requirements. Weld test samples are required for each procedure for major vessel full-penetration welds. Tensile and impact tests are performed to determine the properties of the base metal, heat-affected zone, and weld metal.

5.3.1.6.1 Compliance with Reactor Vessel Material Surveillance Program Requirements

STD DEP 5.3-1

STD DEP Admin

The materials surveillance program monitors changes in the fracture toughness properties of ferritic materials in the reactor vessel beltline region resulting from exposure to neutron irradiation and thermal environment.

Reactor vessel materials surveillance specimens are provided in accordance with requirements of ASTM E-185 and 10~~CRF~~CFR 50 Appendix H. Materials for the program are selected to represent materials used in the reactor beltline region. Charpy V-notch and tensile specimens are manufactured from the material actually used in the reactor beltline region. To represent those, if any, RPV pressure boundary welds that are in the beltline region (or are exposed to the predicted maximum neutron fluence (E>1.60E-13J) at the end of the design lifetime exceeding $1x10^{17}$ neutron/cm^2 at the inside surface of the reactor vessel), Charpy V-notch specimens of weld metal and HAZ material, and tensile specimens of weld metal are manufactured from the sample welds. The same ~~hat~~heat of weld wire and lot of flux (if applicable) and the same welding practice as used for the beltline weld are utilized to make the sample welds. The specimen capsules are provided, each containing a minimum of

12 Charpy V-notch and tensile specimens of the beltline material along with ~~and~~*temperature monitors. Additionally, if required, the specimens identified to represent the welds requiring surveillance are also loaded in the same numbers. The surveillance specimen holders having brackets welded to the vessel cladding in the core beltline region are provided to hold the specimen capsules and a neutron dosimeter. Since reactor vessel specifications require that all low-alloy steel pressure vessel boundary materials be produced to fine-grain practice, the bracket welding does not pose a concern of underclad cracking. A set of out-of-reactor baseline Charpy V-notch specimens, tensile specimens, and archive material are provided with the surveillance test specimens. The neutron dosimeter and temperature monitors will be located as required by ASTM E-185.*

Four surveillance capsules are provided. The predicted end of the adjusted reference nil ductility temperature of the reactor vessel steel is less than 38°C.

The following proposed withdrawal schedule is extrapolated from ASTM E-185.

- *First Capsule: After 6 effective full-power years.*
- *Second Capsule: After 20 effective full-power years.*
- *Third Capsule: With an exposure not to exceed the peak EOL fluence.*
- *Fourth Capsule: Schedule determined based on results of first two capsules per ASTM E-185, Paragraph 7.6.2 (see Section 5.3.4.2 for additional capsule requirements). Fracture toughness testing of irradiated capsule specimens will be in accordance with requirements of ASTM E-185 as called out for by 10CFR50 Appendix H.*

5.3.1.6.4 Position of Surveillance Capsules and Methods of Attachment Appendix H.II B (2)

STD DEP 5.3-1

The surveillance specimen holders, described in Subsections 5.3.1.6.1 and 3.9.5.1.2.10, are located at different azimuths at common elevation in the core beltline region. The locations are selected to produce lead factor ~~*of approximately 1.2*~~ greater than 1 and less than or equal *to 1.5 for the inserted specimen capsules. A positive spring-loaded locking device is provided to retain the capsules in position throughout any anticipated event during the lifetime of the vessel. The capsules can be removed from and reinserted into the surveillance specimen holders. See Subsection 5.3.4.2 for COL license information requirements pertaining to the surveillance material, lead factors, withdrawal schedule and neutron fluence levels.*

In areas where brackets (such as the surveillance specimen holder brackets) are located, additional nondestructive examinations are performed on the vessel base metal and stainless steel weld-deposited cladding or weld-buildup pads during vessel manufacture. The base metal is ultrasonically examined by straight-beam techniques to a depth at least equal to the thickness of the bracket being joined. The area

examined is the area of width equal to at least half the thickness of the part joined. The required stainless steel weld-deposited cladding is similarly examined. The full penetration welds are liquid-penetrant examined. Cladding thickness is required to be at least 3.2 mm. These requirements have been successfully applied to a variety of bracket designs which are attached to weld-deposited stainless steel cladding or weld buildups in many operating BWR reactor pressure vessels.

5.3.1.6.5 Time and Number of Dosimetry Measurements

STD DEP Vendor

~~*GE provides a*~~ A *separate neutron dosimeter* is provided *so that fluence measurements may be made at the vessel ID during the first fuel cycle to verify the predicted fluence at an early date in plant operation. This measurement is made over this short period to avoid saturation of the dosimeters now available. Once the fluence-to-thermal power output is verified, no further dosimetry is considered necessary because of the linear relationship between fluence and power output. It will be possible, however, to install a new dosimeter, if required, during succeeding fuel cycles.*

5.3.3 Reactor Vessel Integrity

STD DEP Vendor

The reactor vessel material, equipment, and services associated with the reactor vessels and appurtenances would conform to the requirements of the subject purchase documents. Measures to ensure conformance included provisions for source evaluation and selection, objective evidence of quality furnished, inspection at the vendor source and examination of the completed reactor vessels.

Toshiba ~~*GE*~~ *provides inspection surveillance of the reactor vessel fabricator in-process manufacturing, fabrication, and testing operations in accordance with* ~~*the GE*~~their *quality assurance program and approved inspection procedures. The reactor vessel fabricator is responsible for the first level inspection of manufacturing, fabrication, and testing activities, and* Toshiba ~~*GE*~~ *is responsible for the first level of audit and surveillance inspection.*

5.3.3.1.1.1 Reactor Vessel

STD DEP T1 2.1-2

The cylindrical shell and top and bottom heads of the reactor vessel are fabricated of low-alloy steel, the interior of which is clad with stainless steel weld overlay except for the top head, and *all nozzles but the steam outlet nozzles ~~and the reactor internal pump casings~~. The bottom head is clad with Ni-Cr-Fe alloy. The reactor internal pump penetrations are clad with Ni-Cr-Fe alloy, or alternatively stainless steel.* The reactor internal pump motor casings are clad with stainless steel only in the stretch tube region and around the bottom of the reactor internal pump motor casings where they interface with the motor cover closures.

5.3.3.3 Fabrication Methods

STD DEP Vendor

STD DEP Admin

*The reactor pressure vessel is a vertical cylindrical pressure vessel of welded construction fabricated in accordance with ASME Code Section III, Class 1, requirements. All fabrication of the reactor pressure vessel ~~was~~*is *performed in accordance with ~~GE~~*Vendor*-approved drawings, fabrication procedures, and test procedures. The shell and vessel head ~~were~~*are *made from formed low-alloy steel plates or forgings and the flanges and nozzles from low-alloy steel forgings. Welding performed to join these vessel components ~~was~~*is *in accordance with procedures qualified to ASME Section III and IX requirements. Weld test samples ~~were~~*are *required for each procedure for major-vessel full-penetration welds.*

5.3.4 COL License Information

5.3.4.1 Fracture Toughness Data

The following site-specific supplement addresses COL License Information Item 5.4.

Fracture toughness data based on the limiting reactor vessel actual materials will be provided in an amendment to the FSAR in accordance with 10 CFR 50.71(e) that occurs one year after the on-site acceptance of the reactor vessel. The data will be based on test results from the actual materials used in the RPV. (COM 5.3-1)

The evaluation methods will be in accordance with 10 CFR 50 Appendices G and H, Regulatory Guide 1.99 Rev. 2, and Reference 5.3-4.

5.3.4.2 Materials and Surveillance Capsule

The following site-specific supplement addresses COL License Information Item 5.5.

The site-specific information of the materials and surveillance program for STP 3 & 4 is as follows:

(1) Specific materials in each surveillance capsule

The surveillance specimens are fabricated from extra portions of vessel forging material from the core regions. The vessel material is low alloy steel, ASME SA-508 Class 3. Surveillance specimens are fabricated by sectioning a weldment made from the extra forging material. Surveillance specimens are taken from the base metal, weld metal and the heat affected zone of the weldment.

(2) Capsule lead factor

The lead factor of each capsule is approximately 1.1.

(3) Withdrawal schedule for each surveillance capsule

The capsule withdrawal schedule is in accordance with ABWR DCD Tier 2 Section 5.3.1.6.1.

(4) Neutron fluence to be received by each capsule at the time of its withdrawal

The neutron fluence to be received by each capsule is as follows:

(a) First capsule: 5.2×10^{16} n/cm^2

(b) Second capsule: 1.7×10^{17} n/cm^2

(c) Third capsule: not to exceed 5.0×10^{17} n/cm^2

(d) Fourth Capsule: will be based on the results of the first two capsules

(5) Vessel end-of life peak neutron fluence

The vessel end-of-life neutron fluence is approximately 5.0×10^{17} n/cm^2.

The materials and surveillance capsule program for STP 3 & 4 are in accordance with Reference 5.3-3.

The Final Safety Analysis Report will be updated prior to receipt of fuel on site to identify the specific materials in each surveillance capsule and provide a plant-specific replacement for the Pressure-Temperature limits. The data will be based on test results from the actual materials used in the RPV. (COM 5.3-2)

5.3.4.3 Plant-Specific Pressure-Temperature Information

The following site-specific supplement addresses COL License Information Item 5.6.

Plant-specific calculations of RT_{NDT}, stress intensity factors, and pressure-temperature curves similar to those in Regulatory Guide 1.99 and SRP Section 5.3.2 will be provided in an amendment to the FSAR in accordance with 10 CFR 50.71(e) prior to receipt of fuel on site. The data will be based on test results from the actual materials used in the RPV. (COM 5.3-3)

The evaluation methods will be in accordance with 10 CFR 50 Appendices G and H, Regulatory Guide 1.99 Rev. 2, and Reference 5.3-4.

5.3.5 References

~~5.3-2~~ ~~*"Transient Pressure Rises Affecting Fracture Toughness Requirements for Boiling Water Reactors", January1979 (NEDO-21778-A).*~~

5.3-3 "Reactor Pressure Vessel Material Surveillance Program", Toshiba Corporation, April 2009 (UTLR-0003, Rev. 0).

5.3-4 SIR-05-044-A, "Pressure-Temperature Limits Report Methodology for Boiling Water Reactors," April 2007

5.4 Components and Subsystem Design

The information in this section of the reference ABWR DCD, including all subsections, tables and figures, is incorporated by reference with the following departures and supplements.

STD DEP T1 2.4-1 (Figure 5.4-10, Figure 5.4-11)

STD DEP T1 2.4-3 (Table 5.4-2, Figures 5.4-8 and 5.4-9)

STD DEP T1 2.4-4 (Table 5.4-2, Figures 5.4-9 and 5.4-11)

STD DEP T1 2.14-1 (Figure 5.4-10)

STD DEP 5B-1 (Table 5.4-4, Figure 5.4-11)

STD DEP 5.4-1 (Table 5.4-6, Figure 5.4-12, and Figure 5.4-13)

STD DEP 5.4-2 (Figure 5.4-1)

STD DEP 5.4-3 (Table 5.4-3, Table 5.4-5)

STD DEP 5.4-4 (Figure 5.4-4)

STD DEP 5.4-5 (Figure 5.4-12)

STD DEP 6C-1(Table 5.4-1a, Table 5.4-2, Figures 5.4-9 and 5.4-11)

STD DEP 7.3-11

STP DEP 10.1-3

STD DEP Vendor

5.4.1.3.1 Recirculation Motor Cooling Subsystem

STD DEP 5.4-4

The RMHX is a vertically-oriented, shell-and-tube U-tube heat exchanger with a bottom water box, as shown schematically on Figure 5.4-4. Principal approximate sizing parameters feature a carbon steel <u>or stainless steel</u> *shell outside diameter of approximately 400 mm and approximately 2700 mm length, 8.62 MPaG design pressure and 302°C design temperature. Tubes are stainless steel material designed for external pressure loading. Shell tube sheet and water box material is carbon steel* <u>or stainless steel</u>*. The RMHX stands taller than the RM motor casing, but the bottoms of each are located approximately at the same elevation. RMC Subsystem primary coolant from the RIP motor cavity flows outbound from a nozzle near the top of the motor casing, and through 63A stainless steel piping, which courses across and upward to the RMHX primary coolant inlet nozzle located near the top of the RMHX shell. This RMC flow proceeds downward, under the combined action of driving pressure head developed (when the RIP is running) by the RM auxiliary impeller and*

by buoyancy head developed by temperature (density) differences existing over the vertical closed-loop path lengths. In moving downward through the shell, this primary coolant sweeps back and fourth across the tube bundles guided by horizontal flow baffle/tube-support plates. Flow exits from the shell through a nozzle located just above the tube sheet and crosses, via 65A piping, directly back to the RIP motor casing on a piping run which is arranged primarily in a horizontal plane. Upon entering the RM casing, this primary coolant is drawn into the suction region of the RM auxiliary impeller, where it is then driven upward through the RM to begin another circuit around this RM-RMHX-RM flow loop.

5.4.5.2 Description

STP DEP 10.1-3

Two isolation valves are welded in a horizontal run of each of the four main steam pipes; one valve is as close as possible to the inside of the drywell, and the other is just outside the containment.

*Figure 5.4-7 shows a main steamline isolation valve (MSIV). Each MSIV is a Y-pattern, globe valve. Rated steam flow through each valve is ~~1.918 x 10^6 kg/h~~*1.912 x 10^6^kg/h*. The main disc or poppet is attached to the lower end of the stem. Normal steam flow tends to close the valve, and higher inlet pressure tends to hold the valve closed. The bottom end of the valve stem closes a small pressure balancing hole in the poppet. When the hole is open, it acts as a pilot valve to relieve differential pressure forces on the poppet. Valve stem travel is sufficient to give flow areas past the wide open poppet greater than the seat port area. The poppet travels approximately 90% of the valve stem travel to close the main steam port area; approximately the last 10% of the valve stem travel closes the pilot valve. The air cylinder actuator can open the poppet with a maximum differential pressure of 1.38 MPaG across the isolation valve in a direction that tends to hold the valve closed.*

A Y-pattern valve permits the inlet and outlet passages to be streamlined; this minimizes pressure drop during normal steam flow and helps prevent debris blockage.

5.4.5.4 Inspection and Testing

STD DEP 7.3-11

Leakage from the valve stem packing is collected and measured by the drywell drain system.~~During shutdown, while the nuclear system is pressurized, the leak rate through the inner valve stem packing can be measured by collecting and timing the leakage.~~

5.4.6.2.1.3 Interlocks

STD DEP T1 2.4-3

The following defines the various electrical interlocks:

(1) *Valve~~s~~ F039 ~~and F047 are two~~ is key-locked open ~~valves~~ with an individual keylock.*

(2) *The F001 limit switch activates when not fully closed and closes F008 and F009.*

(3) *The F039 limit switch activates when fully open and clears the permissive for F037 ~~and F045~~ to open.*

(4) *The F037 and turbine trip and throttle valve limit switches activate when not fully closed to initiate the turbine governor valve signal ramp generator and to clear permissives for F004 to open.*

(5) *The F037 limit switch activates when fully closed and permits ~~F031, F032,~~ F040 and F041 to open and closes F004 and F011.*

(6) *The turbine trip throttle valve ~~(part of C002)~~ limit switch activates when fully closed and closes F004 and F011.*

(7) *High reactor water level (Level 8) closes F037~~, F012, F045~~ and, subsequently, F004 and F011. This level signal is sealed in and must be manually reset. It will automatically clear if a low reactor water level (Level 2) reoccurs.*

(8) *High turbine exhaust pressure, low pump suction pressure, 110% turbine electrical overspeed, or an isolation signal actuates the turbine trip logic and closes the turbine trip and throttle valve. When the signal is cleared, the trip and throttle valve must be reset from the control room.*

(9) *Overspeed of 125% trips the mechanical trip, which is reset at the turbine.*

(10) *An isolation signal closes F035, F036, F048, and other valves as noted in Items (6) and (8).*

(11) *An initiation signal opens F001,~~and~~ F004,* and *F037~~, F012 and F045~~ when other permissives are satisfied, starts the gland seal system, and closes F008 and F009.*

(12) *High- and low-inlet RCIC steamline drain pot levels respectively open and close F058.*

(13) *The combined signal of low flow plus pump discharge pressure opens and, with increased flow, closes F011. Also see Items (5), (6) and (7).*

5.4.6.2.2.1 Design Conditions

STD DEP T1 2.4-3

Operating parameters for the components of the RCIC System are shown in Figure 5.4-9. The RCIC components are:

(1) ~~One 100% capacity turbine and accessories~~One 100% capacity turbine, pump set and accessories.

~~(2) One 100% capacity pump assembly and accessories.~~

(2) ~~(3)~~ Piping, valves, and instrumentation for:

(a) Steam supply to the turbine

(b) Turbine exhaust to the suppression pool

(c) Makeup supply from the condensate storage tank to the pump suction

(d) Makeup supply from the suppression pool to the pump suction

(e) Pump discharge to the feedwater line, a full flow test return line, a minimum flow bypass line to the suppression pool~~, and a coolant water supply to accessory equipment~~

The basis for the design conditions is ASME B&PV Code Section III, Nuclear Power Plant Components.

Analysis of the net positive suction head (NPSH) available to the RCIC pump in accordance with the recommendations of Regulatory Guide 1.1 is provided in Table 5.4-1a.

5.4.6.2.5.2 Emergency Mode (Transient Events and LOCA Events)

STD DEP T1 2.4-3

Startup of the RCIC System occurs automatically either upon receipt of a reactor vessel low water level signal (Level 2) or a high drywell pressure signal. During startup, the turbine control system limits the turbine-pump speed to its maximum normal operating value, controls transient acceleration, and positions the turbine governor valve as required to maintain constant pump discharge flow over the pressure range of the system. ~~Input to the turbine governor is from the flow controller monitoring the pump discharge flow. During standby conditions, the flow controller output is saturated at its maximum value.~~ RCIC system utilizes a flow control system that is an integral part of the pump and turbine.

~~When the RCIC System is shut down, the low signal select feature of the turbine control system selects the idle setting of a speed ramp generator. The ramp generator output signal during shutdown corresponds to the low limit step and a turbine speed demand of 73.3 to 104.7 rad/s.~~

~~On RCIC System startup, bypass valve F045 (provided to reduce the frequency of turbine overspeed trips) opens to accelerate the turbine to an initial peak speed of approximately 157 rad/s; now under governor control, turbine speed is returned to the low limit turbine speed demand of 73.3 rad/s to 104.7 rad/s. After a predetermined delay (5 to 10 s), the steam supply valve leaves the full closed position and the ramp~~

~~generator is released. The low signal select feature selects and sends this increasing ramp signal to the governor. The turbine increases in speed until the pump flow satisfies the controller setpoint. Then the controller leaves saturation, responds to the input error, and integrates the output signal to satisfy the input demand.~~

The operator has the capability to select manual control of the governor, and ~~adjust~~ change *speed and flow (within hardware limitations) to match decay heat steam generation during the period of RCIC operation.*

The RCIC pump delivers the makeup water to the reactor vessel through the feedwater line, which distributes it to obtain mixing with the hot water or steam within the reactor vessel.

The RCIC turbine will trip automatically upon receipt of any signal indicating turbine overspeed, low pump suction pressure, high turbine exhaust pressure, or an autoisolation signal. Automatic isolation occurs upon receipt of any signal indicating:

(1) A high pressure drop across a flow device in the steam supply line equivalent to 300% of the steady-state steam flow at 8.22 MPaA.

(2) A high area temperature.

(3) A low reactor pressure of 0.34 MPaG minimum.

(4) A high pressure in the turbine exhaust line.

The steam supply valve F037~~, steam supply bypass valve F045 and cooling water supply valve F012~~ will close upon receipt of signal indicating high water level (Level 8) in the reactor vessel. These valves will reopen (auto-restart) should an indication of low water level (Level 2) in the reactor vessel occur. Water Level 2 automatically resets the water level trip signal. The RCIC System can also be started, operated, and shut down remote manually provided initiation or shutdown signals do not exist.

5.4.7.1 Design Basis

STD DEP T1 2.4-1

*Connections are provided to the upper pools on ~~two~~*three *loops to return shutdown cooling flow to the upper pools during normal refueling activities if necessary. These connections also allow the RHR System to provide additional fuel pool cooling capacity as required by the Fuel Pool Cooling System during the initial stages of the refueling outage.*

5.4.7.1.1.6 Wetwell and Drywell Spray Cooling

STD DEP 5.4-3

Two of the RHR loops provide containment spray cooling subsystems. Each subsystem provides both wetwell and drywell spray cooling. This subsystem provides steam condensation and primary containment atmospheric cooling following a small

break LOCA by pumping water from the suppression pool, through the heat exchangers and into the wetwell and drywell spray spargers in the primary containment. The preferred method of containment spray is with both wetwell and drywell spray used simultaneously started by manual initiation. If wetwell spray is desired by itself, without drywell spray, it can be initiated by operator action, but must be used in conjunction with ~~one of the full flow modes, which are either~~ the suppression pool (S/P) cooling mode ~~or the low pressure flooder (LPFL)mode~~. To accomplish this, a full flow mode must be initiated first, then its flow is throttled back to approximately one half flow. The wetwell spray valve would then be opened, followed by re-establishing rated flow for wetwell spray operation by opening the applicable full flow mode throttle valve as required. This mode of operation is only recommended for performance of periodic surveillance required by the Technical Specifications, which would likely utilize S/P cooling for the full flow mode. The wetwell spray mode is terminated automatically by a LOCA signal. If desired, the drywell spray mode can be initiated by operator action of opening the drywell spray valves post-LOCA in the pressure of high drywell pressure. The drywell mode is terminated automatically as the RPV injection valve starts to open, which results from a LOCA and reactor depressurization. Both wetwell and drywell spray modes can also be terminated by operator action. The wetwell spray lines have a flow meter with indication in the control room.

5.4.7.1.1.8 Fuel Pool Cooling

STD DEP T1 2.4-1

~~Two~~ Three *of the RHR loops* can *provide supplemental fuel pool cooling during normal refueling activities and any time the fuel pool heat load exceeds the cooling capacity of the fuel pool heat exchangers. For normal refueling activities where the reactor well is flooded and the fuel pool gates are open, water is drawn from the reactor shutdown suction lines, pumped through the RHR heat exchangers and discharged through the reactor well distribution spargers. For 100% core removal, if necessary, water is drawn from the Fuel Pool Cooling (FPC) System skimmer surge tanks, pumped through the RHR heat exchangers and returned to the fuel via the FPC System cooling lines. These operations are initiated and shut down by operator action.*

5.4.7.2.2 Equipment and Component Description

STD DEP 6C-1

STD DEP Vendor

(1) System Main pumps

The main pumps must satisfy the following system performance requirements. The pump equipment performance requirements include additional margins so that the system performance requirements can be achieved. These margins are standard ~~GE~~equipment specification practice and are included in procurement specifications for flow and pressure measuring accuracy and for power source frequency variation.

Number of pumps	*3*
Pump type	*Centrifugal*
Drive unit type	*Constant Speed Induction Motor*
Design flow rate	*954 m^3/h*
Total discharge head at design flow rate	*125m*
Maximum bypass flow	*147.6 m^3/h*
Minumum total discharge head at maximum bypass flow rate	*220m Max* *195m Min*
Maximum runout flow	*1130 m^3/h*
Maximum pump brake horse power	*550 kw*
Net positive suction head ~~(HPSH)~~(NPSH) at 1m ~~about~~ above the pump floor setting	~~2.4m~~2.0m
Process fluid temperature range	*10 to 182°C*

STD DEP 5B-1

(2) Heat Exchangers

(c) Safe Shutdown—The RHR System brings the reactor to a cold shutdown condition of less than 100°C within 36 hours of control rod insertion with two out of the three divisions in operation. The RHR System is manually activated into the shutdown cooling mode below a nominal vessel pressure of 0.93 MPaG.

The RHR heat exchanger capacity is required to be sufficient to meet each of these functional requirements. The limiting function for the RHR heat exchanger capacity is reactor shutdown. *~~post-LOCA containment cooling.~~ The heat exchanger capacity, K, is* 4.27×10^5 W/°C *~~370.5kJ/°C-s~~ per heat exchanger.*

The performance characteristics of the heat exchangers are shown in Table 5.4-4.

5.4.7.2.6 Manual Action

STD DEP T1 2.4-1

(6) Fuel Pool Cooling

Three*~~Two~~ of the RHR loops* can *provide supplemental fuel pool cooling during normal refueling activities and any time the fuel pool heat load exceeds the cooling capacity of the fuel pool heat exchangers. For normal refueling activities where the reactor well is flooded and the fuel pool gates are open, water is drawn from the reactor shutdown suction lines, pumped through the RHR heat exchangers and discharged through the reactor well distribution spargers. For 100% core removal, if necessary, water is drawn from the Fuel Pool Cooling (FPC) System skimmer surge tanks, pumped through the RHR heat exchangers and returned to the fuel pool via the FPC System cooling lines. These operations are initiated and shut down by operator action.*

5.4.8.2 System Description

STD DEP 5.4-1

The total capacity of the system, as shown on the process flow diagram in Figure 5.4-13, is equivalent to 2% of rated feedwater flow. ~~Each pump, NRHX, and F/D is capable of 50% system capacity operation, with the one RHX capable of 100% system capacity operation.~~ Each pump and F/D is capable of 100% system capacity operation. Each of two NRHX is capable of 50% system capacity operation, with the one RHX capable of 100% system capacity operation.

5.4.15 COL License Information

5.4.15.1 Testing of Main Steam Isolation Valves

The following site-specific supplement addresses COL License Information Item 5.7.

Testing of the Main Steam Isolation valves under operating conditions will be performed during the Initial Test Program as described in Subsections 14.2.12.2.26 and 14.2.12.2.34. ITAAC 6 from Table 2.1.2, Nuclear Boiler System, will ensure the MSIVs meet their design basis.

5.4.15.2 Analysis of Non-Design Basis Loss of AC Coping Capability

The following site-specific supplements listed in this section address COL License Information Item 5.8.

5.4.15.2.1 Analysis to Demonstrate the Facility has 8 Hour Non-Design SBO Capability

The capability of the RCIC System to operate for 8 hours as discussed in Subsection 5.4.6 and NUREG-1503 will be demonstrated during the Initial Test Program as described in section 14.2.12.1.9. A best estimate analysis will be available for NRC review by the end of preoperational testing demonstrating that the RCIC system can function for 8 hours in an SBO event. This analysis will reflect Class 1E loadings based on expected plant and operator response during this event. Additionally, an evaluation of room temperature response during the transient will ensure that equipment remains within its qualification envelope. Similar evaluations have been satisfactorily performed on other ABWRs. (COM 5.4-1)

5.4.15.2.2 Analysis to Demonstrate that the DC Batteries and SRV/ADS Pneumatics have Sufficient Capacity

A best estimate analysis demonstrating adequate DC battery and pneumatic supply capacity based on the as purchased equipment configuration will be completed and available for NRC review prior to the commencement of the Preoperational Test Program. This analysis will reflect Class 1E bus loadings based on expected plant response during the 8-hour SBO event. Additionally, an evaluation of room temperature response will ensure that the batteries remain within their qualification envelope. Similar evaluations have been satisfactorily performed on other ABWRs. (COM 5.4-2)

5.4.15.3 ACIWA Flow Reduction

The following site-specific supplement addresses COL License Information Item 5.9.

A hydraulic analysis will be performed to determine if a flow reduction device is needed based on the actual flow rate capacities, pressure, and hose size of the diesel driven pump. This analysis will be available for NRC review prior to the commencement of the Preoperational Test Program. (COM 5.4-3)

5.4.15.4 RIP Installation and Verification During Maintenance

The following site-specific supplement addresses COL License Information Item 5.10.

Procedures address RIP installation and verification for motor bottom cover, as well as visual monitoring of the potential leakage during impeller-shaft and plug removal. A contingency plan assures that core and spent fuel cooling can be provided in the event of loss of coolant during Reactor Internal Pump (RIP) maintenance.

This contingency plan will address the following items:

- Worst case scenario evaluated
- Impact on personnel and plant
- Assumptions made in respect to contingency plan
- Response time of plant and personnel in regard to contingency plan
- Worst case flow rate of drain down of vessel
- Number of pumps plant procedures allow to perform concurrent maintenance activities with the potential to drain the vessel
- Recovery phase

Table 5.4-1a Net Positive Suction Head (NPSH) Available to RCIC Pumps

A	*Suppression pool is at its minimum depth, El. -3740 mm.*
B.	~~*Centerline of pump suction*~~NPSH Reference level *is at El. -7200 mm.**
C.	*Suppression pool water is at its maximum temperature for the given operating mode, 77°C.*
D.	*Pressure is atmospheric above the suppression pool.*
E.	*Minimum suction strainer area as committed to by Appendix 6C methods.*

NPSH available = $H_{ATM} + H_S - H_{VAP} - H_F$

where:

H_{ATM}	=	*Atmospheric head*
H_S	=	*Static head*
H_{VAP}	=	*Vapor pressure head*
H_F	=	*Maximum frictional head including strainer*

Minimum Expected NPSH
RCIC pump flow is 182m^3*/h*

The maximum suppression pool temperature is 77°C.

H_{ATM}	=	*10.62m*
H_S	=	*3.46m*
H_{VAP}	=	~~*4.33m*~~4.39m
H_F	=	*2.10m*

NPSH available = ~~*10.26*~~10.62+*3.46* - 4.39 - ~~*4.33*~~ *2.10*~~*=7.65m*~~= 7.59m

NPSH required = ~~*7.3m*~~7.0 m

*Margin*** = ~~*0.35m*~~0.59m = $NPSH_{available} - NPSH_{required}$

**NPSH Reference* ~~*Point*~~*level is 1m above the pump floor level*

**The final system design will meet the required NPSH with adequate margin.

Table 5.4-2 Design Parameters for RCIC System Components	
(1) RCIC Pump Operation (C001)	
Flow rate	*Injection flow - 182 m^3/h*
	~~Cooling water flow - 4 to 6 m^3/h~~
	~~Total pump discharge - 188 m^3/h (includes no margin for pump wear)~~
Water temperature range	*10°to 60°C, continuous duty* *40°to 77°C, short duty*
NPSH	7.0m*~~7.3m~~ minimum*
Developed head	*900m at 8.22 MPaA reactor pressure*
	186 m at 1.14 MPaA reactor pressure
Maximum pump	*675 kW at 900m developed head* *125 kW at 186m developed head*
Design pressure	*11.77 MPaG*
~~(3) RCIC leakoff orifices (D017, D018)~~	*~~Sized for 3.2 mm diameter minimum to 4.8 mm diameter maximum~~*
(3) Flow element (FE007)	

Table 5.4-2 Design Parameters for RCIC System Components (Continued)	
(4) Valve Operation Requirements	
~~*Cooling water pressure control valve (F013)*~~	~~*Self-contained downstream sensing control valve capable of maintaining constant downstream pressure of 0.52 MPa*~~
~~*Cooling water relief valve (F030)*~~	~~*Sized to prevent overpressuring piping, valves, and equipment in the coolant loop in the event of failure of pressure control valve F013*~~
~~*Barometric condenser condensate drain Line isolation valves (F031 & F032)*~~	~~*These valves operate only when RCIC System is shutdown, allowing drainage to CUW System and they must operate against a differential pressure of 0.52 MPa*~~
~~*Cooling loop shutoff valve (F012)*~~	~~*This valve allows water to be passed through the auxiliary equipment coolant loop and must operate against a differential pressure of 9.65 MPa*~~
~~*Steam supply bypass valve (F045)*~~	~~*Open and/or close against full differential of 8.12 MPa within 5 seconds*~~
~~*Vacuum pump discharge isolation valve (F047)*~~	~~*Open and/or close against 0.314 MPa differential pressure at a temperature of 170°C.*~~
~~*Vacuum pump discharge check valve (F046)*~~	~~*Located at the highest point in the line.*~~
(10) Suction Strainer Sizing	
The suppression pool suction shall be sized so that:	
(a) *Pump NPSH requirements are satisfied when strainer is* ~~*50% plugged*~~ blocked in accordance with RG 1.82 analysis methods~~*; and particles over 2.4 mm diameter are restrained from passage into the pump and feedwater sparger.*~~	

Table 5.4-3 RHR Pump/Valve Logic

Valve Number	Valve Function	Normal Position	Automatic Logic or Permissives		
			Condition	Automatic Action	
F017 B,C	Drywell Spray Valves	Closed	Note *D* **D**	Close	Permissive: To open requires high drywell pressure and F005 fully closed, or to open for test requires F018 fully closed.
F018 B,C	Drywell Spray Isolation Valves	Closed	Note *H* **H**	Close	Permissive: To open requires high drywell pressure and F005 fully closed, or to open fully requires F017 fully closed.
F019 B,C	Wetwell Spray Isolation Valves	Closed	Note *A* **A**	Close	Permissive: To open requires F012 fully closed and either the absence of LOCA or F005 fully closed.
C002	N/A	Run	Note *A* **A**	Stop	

NOTES:

C. ~~*Pump is running*~~ Pump discharge pressure high and low loop flow signal

G. High suppression pool temperature. ~~***(when activated by suppression pool cooling mode)***~~

H. ~~*LOCA condition as indicated by a not-fully-closed injection valve F005.*~~ **LOCA condition as indicated by a not fully closed injection valve F005.**

J. *High loop flow signal.*

Table 5.4-4 RHR Heat Exchanger Design and Performance Data

Design Point Function	~~*Post-LOCA Containment*~~ **Reactor Shutdown**

Table 5.4-5 Component and Subsystem Relief Valves

MPL No.	Service	Relief Route	Relief Pressure (MPaG)	Relief Flow (m^3 /h)
E11-F028A-C	Reactor Water	A	~~*3.44*~~3.43	
E11-F051A-C	Reactor Water	A	~~*3.44*~~3.43	

Table 5.4-6 Reactor Water Cleanup System Equipment Design Data

Pumps		
System Flow Rate (kg/h)	152,500	
Type	Vertical Sealless centrifugal pump	
Number Required	2 **(One Pump is required running at 100% capacity)**	
Capacity (% of CUW System flow each)	~~*50*~~ **100**	
Design Temperature (°C)	66	
Design pressure (MPaG)	~~*10.20*~~ **10.65**	
Discharge head at shutoff (m)	~~*160*~~ **182**	
Heat Exchangers	Regenerative	Nonregenerative
Number Required	1 (3 shells per unit)	2 (2 shells per unit)
Capacity (% CUW System flow each)	100	50
Shell design pressure (MPaG)	~~*10.20*~~ **10.65**	***1.37***
Shell design temperature (°C)	302	85
Tube design pressure (MPaG)	***8.83***	***8.83***
Tube design temperature (°C)	302	302
Type	Horizontal U-tube	Horizontal U-tube
Exchange Capacity (kJ/h) (per unit)	~~*1.15 x 10*~~^{8} **1.15x10**^{8}	~~*2.01x 10*~~^{7} **2.01x10**^{7}
Filter-Demineralizers		
Type	pressure precoat	
Number Required	2 **(One F/D train is required running at 100% capacity)**	
Capacity (% of CUW System flow each)	~~*50*~~ **100**	
Flow rate per unit (kg/h)	~~*76,250*~~ **152,500**	
Design Temperature (°C)	66	
Design pressure (MPaG)	~~*10.20*~~ **10.65**	
Linear velocity (m/h)	~~*~2.5*~~ **~5.0**	
Differential Pressures (MPa)		
Clean	0.034	
Annunciate	0.17	
Backwash	0.21	
Containment Isolation Valves		
Closing time (s)	<30	
Maximum differential pressure (MPa)	8.62	

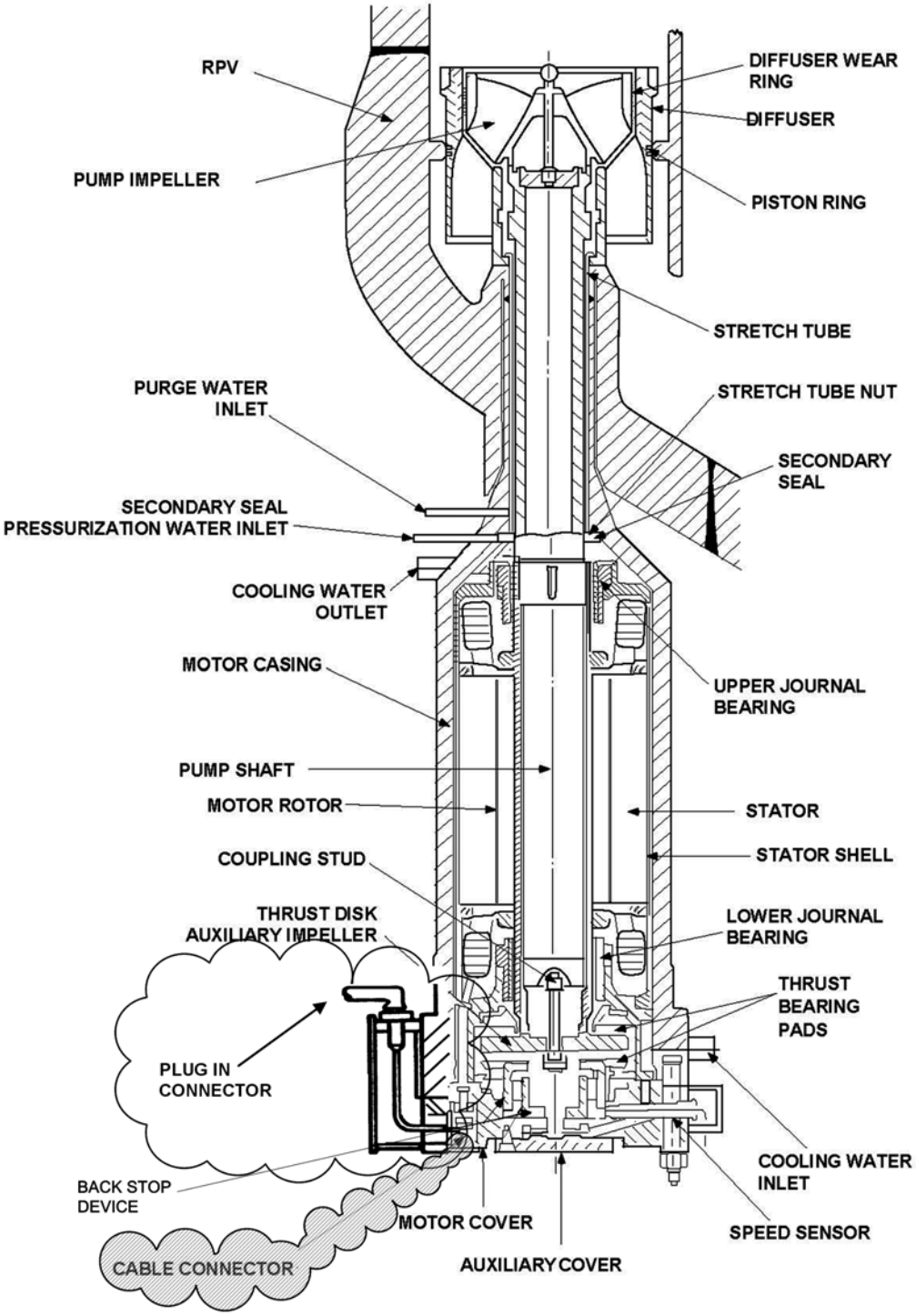

Figure 5.4-1 Reactor Internal Pump Cross Section

Figures located in Chapter 21:

Figure 5.4-4 Reactor Recirculation System P&ID

STD DEP 5.4-4

The Recirculation Motor Heat Exchanger (RMHX) shell, tube sheet and water box material is carbon steel or stainless steel. Material description of connection points between RMHX shell, tube sheet and water box are deleted to permit both of these materials.

Figure 5.4-8 Reactor Core Isolation Cooling System P & ID (Sheet 1, 2, and 3)

STD DEP T1 2.4-3

Replacement of separate pump and turbine assembly with an integrated turbine-pump monoblock device is incorporated in these figures in Chapter 21.

Figure 5.4-9 Reactor Core Isolation Cooling System PFD (Sheet 1 & 2)

STD DEP T1 2.4-3

Replacement of separate pump and turbine assembly requires changes to process conditions for support subsystems.

STD DEP 6C-1

Reduced minimum NPSH available is incorporated in this figure (Sheet 2) in Chapter 21.

STD DEP T1 2.4-4

50% suction strainer blockage is changed to blockage in accordance with RG 1.82 Rev. 3

Figure 5.4-10 Residual Heat Removal System P&ID (Sheet 1, 4 and 6)

STD DEP T1 2.14-1

Removal of the Hydrogen Recombiners

Figure 5.4-11 Residual Heat Removal PFD (Sheet 1)

STD DEP 2.4-1, STD DEP 5B-1 and STD DEP 6C-1

The capability to use RHR division A in the Fuel Pool Cooling Assist Mode, increase Heat Exchanger K Valve, and reduced minimum NPSH available are incorporated in this figure in Chapter 21.

Figure 5.4-11 Residual Heat Removal System PFD (Sheet 2)

STD DEP T1 2.4-1

The capability to use RHR division A in the Fuel Pool Cooling Assist Mode is incorporated in this figure in Chapter 21

STD DEP T1 2.4-4

50% Blockage is changed to blockage in accordance with RG 1.82 analysis

Figure 5.4-12 Reactor Water Cleanup System P&ID (Sheet 1 of 4)

STD DEP 5.4-1

CUW piping pressure change to be consistent with Table 5.4-6 is incorporated in this figure in Chapter 21.

Figure 5.4-12 Reactor Water Cleanup System P&ID (Sheet 2 of 4)

STD DEP 5.4-1

CUW piping pressure change to be consistent with Table 5.4-6 is incorporated in this figure in Chapter 21.

STD DEP 5.4-5

A vent line down to main steam line is provided on the top of the RPV head spray return line, in order to avoid accumulation of hydrogen generated by radiolysis of reactor water during normal reactor operation.

Figure 5.4-12 Reactor Water Cleanup System P&ID (Sheet 3 of 4)

STD DEP 5.4-1

CUW piping pressure change to be consistent with Table 5.4-6 is incorporated in this figure in Chapter 21.

Figure 5.4-13 Reactor Water Cleanup System PFD (Sheet 2 of 2)

STD DEP 5.4-1

The consistency change to CUW pump and filter demineralizer flow is incorporated in this figure in Chapter 21.

5A Method of Compliance For Regulatory Guide 1.150

The information in this appendix of the reference ABWR DCD, including all subsections and figures, is deleted (STD DEP 5A-1).

5B RHR Injection Flow And Heat Capacity Analysis Outlines

The information in this appendix of the reference ABWR DCD, including all subsections and figures, is incorporated by reference with the following departure.

STD DEP 5B-1

5B.2 Outline For Injection Flow Confirmation

5B.2.3 Beginning Injection Flow

Analysis *- Determine the hydraulic head loss, Hmin, for the LPFL line for the minimum flow mode flowrate, QMin, from the head to flow-squared relationship as follows:*

~~*PMin = HMin + Hs + Hv + 11.55 MPa+ margin*~~

Above equation is replaced by equation listed below

PMin = HMin + Hs + Hv + 1.55 MPa+ margin

Confirmation - *(Convert all terms to consistent units)*

PMin = HMin + Hs + Hv + 1.55 MPa+ margin

5B.2.4 Rated Injection Flow

Analysis - *Determine the hydraulic head loss for the LPFL line at 954 m^3/h, H954, from the head to flow-acquired relationship as follows:*

~~$H954 + (H1 - Hs)(954/Q1)^2$~~

Above equation is replaced by equation listed below

$H954 = (H1 - Hs)(954/Q1)^2$

Confirmation - *(Convert all terms to consistent units)*

~~*P954 + H954 + Hs + Hv + 0.27 MPa+ margin*~~

Above equation is replaced by equation listed below

P954 = H954 + Hs + Hv + 0.27 MPa+ margin

5B.3 Outline For Heat Exchanger Confirmation

Analysis

(a) *Sizing of the RHR heat exchanger was based on the* shutdown cooling ~~*S/P cooling*~~ *needed during a* cooldown to a normal 17-day refueling outage. ~~*feedwater line break LOCA to maintain the S/P temperature below 97°C with any two of three RHR loops operating.*~~ *The result was each loop having the same identical heat exchanger, each*

characterized within an overall heat removal capacity of 4.27 x 10^5 W/°C *~~370.5 kJ/s°C~~ for each loop.*

(b) *The heat removal capacity is specified as* 4.27 x 10^5 W/°C, *~~370.5 kJ/sec °C,~~ which is a constant in the following equation.*

~~*Q, kJ/s = (370.5) (Ti - Tu)*~~

Q, W = (4.27 x 10^5) (Ti - Tu)

Where Ti = Temperature from the Reactor *~~S/P~~ or into the RHR heat exchanger, °C*

Tu = Ultimate heat sink temperature, °C

(c) *For the system design sizing analysis, the heat exchanger capacity was assumed constant over the range of analysis, which covered the* Reactor *~~S/P~~ temperature range of* 28.3°C to 49°C. *~~43.3°C to 97°C.~~ Water from the* Reactor *~~S/P~~ is the input to the RHR heat exchanger, or Ti. The heat exchanger flow rate (*Reactor *~~S/P~~ side, tube side) was assumed constant at 954 m^3/h.*

(d) *The* 4.27 x 10^5 W/°C *~~370.5 kJ/s °C~~ constant characterizes the combined performance of the following equipment, flow conditions, and peripheral heat loads.*

(e) *A detailed analytical heat exchanger and pump design that incorporates the features ~~of 4 above~~ in an overall integrated solution will be available by the applicant. This detailed analytical model will produce heat removal capacity values equal to or greater than* 4.27 x 10^5 W/°C *~~370.5 kJ/s°C~~ over the same temperature operating range used for the system analysis* (28.3°C to 49°C). *~~(43.3°C to 97°C).~~ This may be a combination of the applicants' own analysis plus the analysis of equipment vendors.*

6 Engineered Safety Features

6.0 General

The information in this section of the reference ABWR DCD is incorporated by reference with no departures or supplements.

6.1 Engineered Safety Feature Materials

The information in this section of the reference ABWR DCD, including all subsections and tables, is incorporated by reference with the following supplements.

6.1.1.1.1 Material Specification

The following site-specific supplement addresses site-dependent information identified in the reference ABWR DCD Tier 2 Table 6.1-1.

Materials to be used in the Reactor Building Cooling Water System heat exchanger and the Reactor Service Water System pump, piping, and valves are identified in Table 6.1-1.

6.1.3 COL License Information

6.1.3.1 Protective Coatings and Organic Materials

The following site-specific supplement addresses COL License Information Item 6.1.

An analysis of any containment coatings not complying with the requirements of Regulatory Guide 1.54 and ANSI N101.2 will be performed after the procurement of the components.

The analysis will include:

(1) The total amount of protective coatings and organic materials used inside the containment that do not meet the requirements of Regulatory Guide 1.54 and ANSI N101.2.

(2) An evaluation of the generation rate as a function of time of combustible gases that can be formed from organic materials under Design Basis Accident conditions.

(3) Provision of the technical basis and assumptions used for this evaluation (Subsections 6.1.2.1 and 6.1.2.2).

This analysis will be completed and available for NRC review by the end of the respective unit preoperational testing. (COM 6.1-2) This analysis will be documented and retained in plant quality records in accordance with applicable sections of 10 CFR 50, Appendix B.

Table 6.1-1 Engineered Safety Features Component Materials*

Component	Form	Material	Specification (ASTM/ASME)
Reactor Building Cooling Water System			
Heat Exchanger†	Plate Tubes	**Titanium†**	**SB-265 Gr 1†**
Reactor Service Water System†			
Pump	Casting	**Stainless Steel†**	**SA-351 Gr CF3M†**
			SA-351 Gr CF8†
			SA-351 Gr CF8M†
Valves	Casting		
	Casting		
	Casting	**Stainless Steel†**	**SA-351 Gr CF3M†**
			SA-351 Gr CF8†
			SA-351 Gr CF8M†
	Forging	**Stainless Steel†**	**SA-182 Gr F316L†**
Piping	Seamless Pipe	**Stainless Steel†**	**SA-312 Gr TP316L†**
	Welded Pipe	**Stainless Steel†**	**SA-358 Gr 316L†**

* *Carbon content for wrought austenitic stainless steels will be limited to 0.020% for service temperatures above 93.3°C.*

† *Materials are site-dependent.*

6.2 Containment Systems

The information in this section of the reference ABWR DCD, including all subsections, tables, and figures, as modified by the STP Nuclear Operating Company Application to Amend the Design Certification rule for the U.S. Advanced Boiling Water Reactor (ABWR), "ABWR STP Aircraft Impact Assessment (AIA) Amendment Revision 3," dated September 23, 2010 is incorporated by reference with the following departures and supplements.

STD DEP T1 2.3-1 (Table 6.2-7)

STD DEP T1 2.4-2

STD DEP T1 2.4-3 (Tables 6.2-7, 6.2-8 and 6.2-10)

STD DEP T1 2.4-4

STD DEP T1 2.14-1 (Figure 6.2-38, Figure 6.2-40, Figure 6.2-41,Tables 6.2-7, 6.2-8 and 6.2-10)

STD DEP T1 3.4-1

STD DEP 6.2-2 (Tables 6.2-1 and 6.2-2, Figures 6.2-2, 6.2-3, 6.2-4, 6.2-5, 6.2-6a and b, 6.2-7a and b, 6.2-8a, 6.2-8b, 6.2-8c, 6.2-9, 6.2-10, 6.2-11, 6.2-12a and 6.2-12b, 6.2-13a and 6.2-13b, 6.2-14, 6.2-15, 6.2-22, 6.2-23a, 6.2-23b, 6.2-24, 6.2-25a, and 6.2-25b.)

STD DEP 6.2-3 (Tables 6.2-5, 6.2-6, 6.2-7, 6.2-8 and 6.2-10)

STD DEP 6C-1(Table 6.2-2b, 6.2-2c)

STD DEP 9.2-7 (Table 6.2-9)

STD DEP 9.2-9 (Table 6.2-9)

STD DEP 9.3-2 (Tables 6.2-7, 6.2-8, 6.2-9 and 6.2-10)

STD DEP Admin (Tables 6.2-5, 6.2-7, 6.2-8 and 6.2-10)

6.2.1.1.1 Design Bases

STD DEP T1 2.14-1

*(9) The Atmospheric Control System (ACS) establishes and maintains the containment atmosphere to less than 3.5% by volume oxygen during normal operating conditions to ~~assure that~~*maintain *an inert atmosphere~~ operation of two permanently installed recombiners can be initiated on high levels as determined by the Containment Atmospheric Monitoring System (CAMS)~~.*

6.2.1.1.2.1 Drywell

STD DEP 6.2-2

The maximum drywell temperature occurs in the *case of a steamline break (~~169.7°C~~*173.2°C) Although this exceeds the ABWR drywell design temperature (171.1°C), it only exceeds it by 2.1°C and only for about 2 seconds. Due to thermal inertia, components in the drywell would not have sufficient time to reach the design limit temperature. *~~and is below the design value (171.1°C)~~.*

The maximum drywell pressure occurs in the *case of a feedwater line break (~~268.7~~*281.8 *kPaG). The design pressure for the drywell (309.9 kPaG) includes ~~16%~~*approximately 10% *margin.*

6.2.1.1.2.2 Wetwell

STD DEP 6.2-2

*The wetwell chamber design pressure is 309.9 kPaG and design temperature is ~~103.9°C~~*104°C.

Under normal plant operating conditions, the maximum suppression pool water and wetwell airspace temperature is 35°C or less. ~~Under blowdown conditions following an isolation event or LOCA, the initial pool water temperature may rise to a maximum of 76.7°C.~~The continued release of decay heat after the initial blowdown following an isolation event or LOCA *may result in suppression pool temperatures as high as ~~97.2~~* 99.6*°C. The Residual Heat Removal (RHR) System is available in the Suppression Pool Cooling mode to control the pool temperature. Heat is removed via the RHR heat exchanger(s) to the Reactor Building Cooling Water (RCW) System and finally to the Reactor Service Water (RSW) System. The RHR System is described in Subsection 5.4.7.*

6.2.1.1.3.3 Accident Response Analysis

STD DEP 6.2-2

The containment design pressure and temperature were established based on enveloping the results of this range of analyses~~ plus providing NRC prescribed margins~~.

*For the ABWR pressure suppression containment system, the peak containment pressure following a LOCA is ~~very~~*relatively *insensitive to variations in the size of the assumed primary system rupture. This is because the peak occurs late in the blowdown and is determined in very large part by the transfer of the noncondensible gases from the drywell to the wetwell airspace. ~~This process is not significantly influenced by the size of the break.~~ In addition, there is ~~a 15%~~*an approximately 10% *margin between the peak calculated value and the containment design pressure that will easily accomodate small variations in the calculated maximum value.*

*Tolerances associated with fabrication ~~and installation may result in the as-built size of the postulated break areas being 5% greater than the values presented in this chapter. Based on the above, these as-built variations would not invalidate the plant safety analysis presented in this chapter and Chapter 15~~*of the RPV nozzles have been taken into account in this analysis.

6.2.1.1.3.3.1 Feedwater Line Break

STD DEP T1 2.4-2

STD DEP 6.2-2

*Immediately following a double-ended rupture in one of the two main feedwater lines just outside the vessel (Figure 6.2-1), the flow from both sides of the break will be limited to the maximum allowed by critical flow considerations. The effective flow area on the RPV side is ~~given in Figure 6.2-2~~*0.08399 m^2. *Reverse RPV flow in the second FW line is prevented by check valves shown in Figure 6.2-1. ~~During the inventory depletion period, subcooled blowdown occurs and the effective flow area at saturated condition is much less than the actual break area. The detailed calculational method is provided in Reference 6.2-1.~~*

~~The maximum possible feedwater flow rate was calculated to be 164% of nuclear boiler rated (NBR), based on the response of the feedwater pumps to an instantaneous loss of discharge pressure. Since the Feedwater Control System will respond to decreasing RPV water level by demanding increased feedwater flow, and there is no FWLB sensor in the design, this maximum feedwater flow was conservatively assumed to continue for 120 seconds (Figure 6.2-3). This is very conservative because:~~

~~(1) All feedwater system flow is assumed to go directly to the drywell.~~

~~(2) Flashing in the broken feedwater line was ignored.~~

~~(3) Initial feedwater flow was assumed to be 105% NBR.~~

~~(4) The feedwater pump discharge flow will coastdown as the feedwater system pumps trip due to low suction pressure. During the inventory depletion period, the flow rate is less than 164% because of the highly subcooled blowdown. A feedwater line length of 100m was assumed on the feedwater system side.~~

In order to provide further assurance of conservatism, FWLB mitigation is added to the ABWR design. The system is described in Section 7.3.1.1.2. *The specific enthalpy time history, assuming the break flow of Figure 6.2-3, is shown in Figure 6.2-4.* Initial reactor power is assumed to be 102% NBR.

6.2.1.1.3.3.1.1 Assumptions for Short-Term Response Analysis

STD DEP 6.2-2

The response of the Reactor Coolant System and the Containment System during the short-term blowdown period of the accident has been analyzed using the following assumptions:

*(1) The initial conditions for the FWLB accident ~~are such that system energy is maximized and the system mass is minimized~~*maximize the containment pressure response. That is:

(a) The reactor is operating at 102% of the rated thermal power, which maximizes the post-accident decay heat.

*(b) The initial suppression pool mass is at the ~~low~~*high *water level.*

(c) The initial wetwell air space volume is at the high water level.

*(d) The suppression pool temperature is the operating maximum ~~temperature~~*value.

*(4) The main steam isolation valves (MSIVs) start closing at 0.5 s after the accident. ~~They are fully closed in the shortest possible time (at 3.5 s) following closure initiation.~~*The turbine stop valves are closed in 0.2 seconds after reactor trip/turbine trip (RT/TT). *By assuming rapid closure of these valves, the RPV is maintained at a high pressure, which maximizes the calculated discharge of high energy water into the drywell.*

*(5) ~~The vessel depressurization flow rates are calculated using Moody's homogeneous equilibrium model (HEM) for the critical break flow (Reference 6.2-2).~~The vessel depressurization flow rates are calculated using Moody's ~~homogeneous equilibrium model (HEM) for the critical break flow~~*critical flow model *(Reference 6.2-2). ~~The break area on the RPV side for this study is shown in Figure 6.2-2. During the inventory depletion period, subcooled blowdown occurs and the effective break area at saturated conditions is much less than the actual area. The detailed calculational method is provided in Reference 6.2-1.~~*

~~*Reactor vessel internal heat transfer is modeled by dividing the vessel and internals into six metal nodes. A seventh node depends on the fluid (saturated or subcooled liquid, saturated steam) covering the node at the time. The assumptions include:*~~

~~*(a) The center of gravity of each node is specified as the elevation of that node.*~~

~~*(b) Mass of water in system piping (except for HPCF and feedwater) is included in initial vessel inventory.*~~

~~*(c) Initial thermal power is 102% of rated power at steady state conditions with corresponding heat balance parameters which correspond to turbine control valve constant pressure of 6.75 MPaA.*~~

~~*(d) Pump heat, fuel relaxation, and metal water reaction heat are added to the ANSI/ANS 5.1 decay heat curve plus 20% margin.*~~

~~*(e) Initial vessel pressure is 7.31 MPaA.*~~

(6) ~~*There are two HPCF Systems, one RCIC System, and three RHR Systems in the ABWR. One HPCF System, one RCIC System and two RHR Systems are assumed to be available. HPCF flow cannot begin until 36 seconds after a break, and then the flow rate is a function of the vessel to wetwell differential pressure. Rated HPCF flow is 182 m^3/h per system at 8.12 MPaD and 727 m^3/h, per system at 0.69 MPaD. Rated RHR flow is 954 m^3/h at 0.28 MPaD with shutoff head of 1.55 MPaD. Rated RCIC flow is 182 m^3/h with reactor pressure between 8.12 MPaG and 1.04 MPaG, and system shuts down at 0.34 MPaG~~Influence of the ECCS systems is minimal since the time interval analyzed for short-term is approximately the same time as the response time of associated systems injections into the RPV.

(8) The wetwell airspace temperature is allowed to exceed the suppression pool temperature as determined by a mass and energy balance on the airspace.

(9) Wetwell and drywell wall and structure heat transfer are ignored.

(10) Actuation of SRVs is modeled.

(11) Wetwell-to-drywell vacuum breakers ~~*are not modeled*~~ are modeled but do not open.

(12) Drywell and wetwell sprays and RHR cooling mode are not modeled.

(13) ~~*The dynamic backpressure model is used.*~~Not Used

(14) Initial drywell conditions are 0.107 MPa, 57°C and 20% relative humidity.

(15) Initial wetwell airspace conditions are 0.107 MPa, 35°C and 100% relative humidity.

(16) *The drywell is modeled as a single node. All break flow into the drywell is homogeneously mixed with the drywell inventory.*

(17) ~~*Because of the unique containment geometry of the ABWR, the inert atmosphere in the lower drywell would not transfer to the wetwell until the peak pressure in the drywell is achieved. Figure 6.2-5 shows the actual case and the model assumption. Because the lower drywell is connected to the drywell connecting vent, no gas can escape from the lower drywell until the peak pressure occurs. This situation can be compared to a bottle whose opening is exposed to an atmosphere with an increasing pressure. The contents of the lower drywell will start transferring to the wetwell as soon as the upper drywell pressure starts decreasing. A conservative credit for transfer of 50% of the lower drywell contents into the wetwell was taken.*~~ Not Used

6.2.1.1.3.3.1.2 Assumptions for Long-Term Cooling Analysis

STD DEP 6.2-2

Following the blowdown period, the ECCS discussed in Section 6.3 provides water for core flooding, containment spray, and long-term decay heat removal. The containment pressure and temperature response during this period was analyzed using the following assumptions:

(1) ~~*The ECCS pumps are available as specified in Subsection 6.3.1.1.2 (except one low pressure flooder feeding a broken feedwater line, in case of a FWLB).*~~There are two HPCF Systems, one RCIC System, and three RHR Systems in the ABWR. All motor operated pump systems (HPCF and RHR) are assumed to be available to maximize pump heat into the suppression pool. *A single failure of one RHR heat exchanger was assumed for conservatism.*

(2) *The ANSI/ANS-5.1-* 1979 *decay heat* plus 2-sigma uncertainty *is used. Fission energy, fuel relaxation heat, and pump heat are included.*

(3) *The suppression pool* ~~*is the only heat sink available in the containment system.*~~ volume corresponds to the low water level.

(4) ~~*After 10 minutes, the RHR heat exchangers are activated to remove energy via recirculation cooling of the suppression pool with the RCW System and ultimately to the RSW System. This is a conservative assumption, since the RHR design permits initiation of containment cooling well before a 10 minute period (see response to Question 430.26).*~~After 30 minutes, one RHR heat exchanger is activated to remove energy via recirculation cooling of the suppression pool and one RHR heat exchanger is activated to remove energy via drywell sprays with the RCW System and ultimately to the RSW System.

(6) *The lower drywell flooding ~~of 815m3 was assumed to occur 70 seconds after scram. During the blowdown phase, a portion of break flow flows into the lower drywell. This is conservative, since lower drywell flooding will probably occur at approximately 110 to 120 second time period.~~*is not modeled. Water which is from the lower drywell is assumed to be mixed with the suppression pool to calculate the bulk average temperature.

(7) *~~At 70 seconds, the feedwater specific enthalpy becomes 418.7 J/g (100 C saturation fluid enthalpy)~~*Structural heat sinks are modeled in the containment system.

6.2.1.1.3.3.1.3 Short-Term Accident Responses

STD DEP 6.2-2

The calculated containment pressure and temperature responses for a feedwater line break are shown in Figures 6.2-6 and 6.2-7, respectively. ~~The peak pressure (268.7 kPaG) and temperature (140°C) occur in the drywell. The containment design pressure of 309.9 kPaG is 115% of the peak pressure.~~

~~The drywell pressurization is driven by the wetwell pressurization for stable peaks. The wetwell pressurization is a function of three major parameters:~~

~~(1) The increased wetwell air mass caused by the addition of drywell air~~

~~(2) Compression of the airspace volume due to increased suppression pool volume~~

~~(3) Increased vapor partial pressure from increasing suppression pool temperature~~

*~~The suppression pool volume increase is caused by the liquid addition to the containment system from the broken feedwater line. Contribution of these parameters to wetwell pressurization is about 80% by the increased air mass, 15% by the compression effects, and 5% by the increased vapor partial pressure. Once air carryover from the drywell is completed, the wetwell and, subsequently, the drywell pressure peak occurs as the volumetric compression is completed and the pool volume begins to decrease due to the drawdown effects of the ECCS flow. Since the suppression pool volume continues to decrease as the ECCS flow continues, the short-term pressure peak is the peak pressure for the transient.~~*The containment pressure response (Figure 6.2-6) covers the pool swell phase of the short-term containment response. The drywell pressure peaks soon after bubble breakthrough as the break flow continues to push the drywell air to the wetwell. The wetwell pressure also continues to climb after this phase as the air carryover from the drywell continues.

6.2.1.1.3.3.1.4 Long-Term Accident Responses

STD DEP 6.2-2

In order to assess the adequacy of the containment system following the initial blowdown transient, an analysis was made of the long-term temperature and pressure response following the accident. The analysis assumptions are those discussed in Subsection 6.2.1.1.3.3.1.2.

~~*The short-term pressure peak (268.7 kPaG) of Figure 6.2-6 is the peak pressure for the whole transient.*~~ *Figure 6.2-8 shows temperature time histories for the suppression pool, wetwell, and drywell temperatures. The peak pool temperature (* 99.6*°C) is reached at* 6600 *seconds (*1.833 *hours)*. This is less than the suppression pool temperature value of 100°C which is used in the net positive suction head available (NPSHA) calculations for RHR and HPCF.

6.2.1.1.3.3.2 Main Steamline Break

STD DEP 6.2-2

A schematic of the ABWR main steamlines, with a postulated break in one of the main steamlines, is shown in Figure 6.2-9. The main steamline (MSL) break is a double-ended break with one end fed by the RPV directly through the broken line, and the other fed by the RPV through the unbroken main steamlines until the MSIVs are closed. Once the MSIVs are closed, the break flow is only from the RPV through the broken line.

Each MSL contains a flow limiter built into the MSL nozzle on the RPV with a throat area of 0.09848 m^2, as shown in Figure 6.2-9. This flow limiter provides the effective break area for the vessel side.

Flow from the condenser side of the break continues for 0.5 seconds, at which time the MSIVs begin to close on high flow signal. A valve stroke time of 4.5 seconds is used for the MSIV closure. Flow from the condenser side of the break is ramped down to zero between 0.5 and 5.0 seconds.~~*The effective break area used for the MSL is shown in Figure 6.2-10. More detailed descriptions of the MSL break model are provided in the following:*~~

~~*(1) Each MSL contains a flow limiter built into the MSL nozzle on the RPV with a throat area of 0.0983m*^{2}*, as shown in Figure 6.2-9.*~~

~~*(2) The break is located in one MSL at the inboard MSIV.*~~

~~*(3) During the inventory depletion period, the flow multiplier of 0.75 is applied (Reference 6.2-1).*~~

~~*(4) The flow resistance of open MSIVs is considered. A conservative value of 2.062 for pressure loss coefficient for two open MSIVs was taken. The nominal value is approximately 3.0. When the open MSIV resistance is considered, the flow chokes at the MSIV on the piping side as soon as the inventory depletion period ends. The effective flow area on the piping side reduces to 70% of a frictionless piping area. The value of 70% applies to flow of steam and twophase mixture with greater than 15% quality.*~~

~~*This assumption is quite conservative because all other resistances in piping are ignored and the flow in the steamline within a one to two second period is either all steam or a two-phase mixture of much greater than 15% quality.*~~

~~*(5) MSIVs are completely closed at a conservative closing time of 5.5 seconds (0.5 seconds greater than the maximum closing time plus instrument delay), in order to maximize the break flow.*~~

6.2.1.1.3.3.2.1 Assumptions for Short-Term Response Analysis

STD DEP 6.2-2

The response of the reactor coolant system and the containment system during the short-term blowdown period of the MSLB accident is analyzed using the assumptions listed in the above subsection and Subsection 6.2.1.1.3.3.1.1 for the feedwater line break, ~~*with the following exceptions:*~~except feedwater mass flow rate for a MSL break was assumed to be 130% NBR for the case where no operator action is assumed to control water level. Additional cases were run with feedwater mass flow rate regulated to control RPV water level or with no feedwater flow based on an assumed loss of offsite power.

~~*(1) The vessel depressurization flow rates are calculated using the Moody's HEM for the critical break flow.*~~

~~*(2) The turbine stop valve closes at 0.2 second. This determines how much steam flows out of the RPV, but does not affect the inventory depletion time on the piping side.*~~

~~*(3) The break flow is saturated steam if the RPV collapsed water level is below the MSL elevation; otherwise, the flow quality is the vessel average quality. This case provides the limiting drywell temperature.*~~

~~*Another case was evaluated with the assumption that the two-phase level swell would reach the main steam nozzle in one second, thereby changing the flow quality to the RPV average quality after one second. This case provides a higher drywell pressure but a lower drywell temperature than the first assumption.*~~

~~*(4) The feedwater mass flow rate for a MSL break was assumed to be 130% NBR for 120 seconds. This is a standard MSL break containment analysis assumption based on a conservative estimate of the total available feedwater inventory and the maximum flow available from the feedwater pumps with discharge pressure equal to the RPV pressure. The feedwater enthalpy was calculated as described for the FWL break (Subsection 6.2.1.1.3.3.1.1) for 130% NBR flow, and is shown in Figure 6.2-11.*~~

~~*(5) The SRVs are not actuated.*~~

6.2.1.1.3.3.2.3 Short-Term Accident Response

STD DEP 6.2-2

*Figures 6.2-12 ~~through 6.2-15~~*and 6.2-13 *show the pressure and temperature responses of the drywell and wetwell during the blowdown phase of the steamline break ~~accident~~.*

The maximum drywell temperature (173.2°C) is predicted to occur for the steamline break. *The MSLB with two-phase blowdown starting when the RPV ~~collapsed~~*water *level is at* or below *the main steamline nozzle provides the highest peak drywell temperature. The peak drywell* air *temperature is ~~169.7~~*173.2*°C, ~~below the~~*which is above the *design value of 171.1°C, and is the limiting one as compared to the FWLB peak temperature.* As noted in Section 6.2.1.1.2.1, this peak calculated drywell temperature exceeds the design limit for only 2 seconds. *The peak drywell pressure for the MSLB remains below that for the FWLB, which becomes the most limiting.* The peak drywell pressure is below the design pressure. The MSLB is the limiting event for peak drywell temperature. The FWLB is the most limiting for drywell pressure.

6.2.1.1.3.3.2.4 Long-Term Accident Response

STD DEP 6.2-2

~~*The long-term containment pressure and temperature responses following the MSLB accident remain below those for the feedwater line break, which is the most limiting event.*~~The long-term containment pressure response following the MSLB accident remains below that for the feedwater line break. The long-term temperature response remains below that for the peak achieved in the short term for the steam line break shown in Figure 6.2-13.

6.2.1.1.3.4.1 Short-Term Pressurization Model

STD DEP 6.2-2

*The analytical models, assumptions and methods used to evaluate the containment response during the reactor blowdown phase of a LOCA are ~~described in References 6.2-1, and 6.2-2~~*similar to those for the feedwater line break.

6.2.1.1.4 Negative Pressure Design Evaluation

STD DEP 6.2-2

Drywell depressurization following a ~~FWLB~~LOCA results in the severest pressure transient in the drywell; this transient is therefore used in sizing the Wetwell-to-Drywell Vacuum Breaker System (WDVBS). The most severe depressurization in the wetwell is caused by wetwell spray actuation subsequent to a stuck open relief valve. The analysis of this transient shows that the Primary Containment Vacuum Breaker System (PCVBS) is not required.

6.2.1.1.7 Asymmetric Loading Conditions

STD DEP Admin

Localized pipe forces, pool swell and SRV actuation are asymmetric pressure loads which act on the containment and internal structure (see Subsection ~~6.2.1.1.5~~ 6.2.1.1.6 for magnitudes of pool swell and SRV loads).

6.2.1.7 Instrumentation Requirements

In addition to the ABWR design features, the control of the suppression pool cleanliness is a significant element of minimizing the potential for strainer plugging. ~~The COL applicant will review the issue of maintaining the suppression pool cleanliness, and propose to the NRC Staff an acceptable method for assuring that the suppression pool cleanliness is maintained. Methods shall be considered for removing, at periodic intervals, sediment and floating or sunk debris from the suppression pool that the SPCU does not remove. See Subsection 6.2.7.3 for COL license information.~~

~~Refer to Appendix 6C for additional information on BWR design guidelines.~~

6.2.1.7.1 Suppression Pool Cleanliness Program

6.2.1.7.1.1 Purpose

This operational program is to ensure that the primary containment is free from debris that could become dislodged in an accident and be transported to the ECCS suction strainers and interfere with their proper functioning during a design basis event.

6.2.1.7.1.2 Scope

This program applies to the primary containment, including the drywell and suppression pool, for STP Units 3 and 4. This program has design, maintenance and operational elements. This program is comprised of: (1) design change control to ensure that material whose susceptibility to damage resulting in uncontrolled debris is limited and cannot be replaced with material with greater susceptibility: (2) restricted access to primary containment during reactor operations and refueling periods: (3) suppression pool cleanup system operation to maintain S/P cleanliness ; (4) foreign material exclusion and housekeeping requirements to ensure that foreign material that could be detrimental to ECCS strainer operation if left in primary containment is removed prior to containment close out; and (5) drywell , S/P, and strainer inspections

following outages to ensure that no debris is present prior to the containment being closed out in preparation for operation.

The program is based on ABWR Operating Experience, Electric Power Research Institute (EPRI) guidelines contained in EPRI TR 1016315, "Nuclear Maintenance Applications Center: Foreign Material Exclusion Guidelines" and Institute of Nuclear Power Operations (INPO) guidance in INPO 07-008, "Guidelines for Achieving Excellence in Foreign Material Exclusion (FME)."

6.2.1.7.1.3 Responsibilities

The operations and maintenance organizations have overall responsibility for the procedures that implement this program. There is a suppression pool cleanliness program owner, whose responsibility is to have overview of all aspects of this program, including reviewing procedures, training station personnel, being aware of industry operating experience, and on an ongoing basis assessing the overall effectiveness of the program.

6.2.1.7.1.4 Standards

There will be no fibrous or calcium silicate insulation inside the primary containment. All insulation will be RMI-type which will not pass through the ECCS suction strainers. Design change control will ensure that the RMI is not replaced with fibrous or calcium silicate insulation.

The primary containment will be designated as a Foreign Material Exclusion (FME) Zone 1 in accordance with the INPO Definition. This is an area where loss of FME could result in personnel injury, nuclear fuel failure, reduced safety system or station availability, or an outage extension or significant cost for recovery and is the highest level of FME defined by INPO. All activities associated with suppression pool cleanliness will be done in accordance with the STP 3 & 4 Quality Assurance Program.

The S/P cleanup system will be operated as necessary to maintain the water chemistry in the S/P comparable to that required for refueling water.

The primary containment atmosphere is inerted during reactor operations. Therefore, access to the primary containment is effectively prohibited.

6.2.1.7.1.5 Key Elements of the Suppression Pool Cleanliness Program

During refueling outages, the containment is a FME Zone 1 area. In addition, strict house keeping controls are in place to ensure that only needed material is brought into containment and that work areas are restored to their original conditions following completion of the work. Prior to entry into the containment during scheduled or unscheduled outages, all material will be accounted for and documented.

Following each refueling outage, a detailed visual inspection is performed of the primary containment to identify and remove any loose debris. This detailed inspection is controlled by plant procedures in accordance with the Procedure Development

Program. All debris identified will be documented and entered into the corrective action program for trending and potential action.

In addition a remote visual inspection will be performed of the Residual Heat Removal (RHR), Reactor Core Isolation Cooling (RCIC), and High Pressure Core Flooder (HPCF) suction strainers and the S/P floor to ensure there is no debris present. This inspection will be focused on the presence of debris in the suction strainers but will also look for any structural gaps that would allow debris to bypass the strainer flow holes. Results of these inspections will be documented in the procedure and in the corrective action program. Debris that is identified will be removed and any strainer structure gaps will be assessed and repaired if necessary.

The S/P cleanup system will normally be operated in alignment with a train of the fuel pool cleanup filter/demineralizers to ensure S/P water quality. Floating debris and sediment in the suppression pool not removed by the Suppression Pool Cleanup System will be removed during refueling outages.

In the unlikely event of a primary containment entry during the operating cycle, a close-out inspection will be performed prior to the return to operation.

6.2.1.7.1.6 Acceptance Criteria

Procedures related to suppression pool cleanliness will have defined acceptance criteria that must be met prior to closing containment and returning to power. Acceptance criteria will be absence of debris in the primary containment non suppression pool areas. For the strainers themselves, the acceptance criteria will be that the strainer inlets are not restricted, the strainer screens are not plugged, and the strainer structure does not have any structural gaps. For the suppression pool, the acceptance criteria will be the absence of debris and sediment.

There is a documented close-out of containment following completion of all cleanliness inspections and prior to resumption of power operation.

6.2.1.7.1.7 Procedural Controls

Station procedures that implement the suppression pool cleanliness program will be developed in accordance with the Procedure Development Plan described in Section 13.5. These procedures will address control of materials, access to the containment, inspection and cleanup of containment, inspection and cleanup of the strainers, and inspection and cleanup of the suppression pool.

6.2.1.7.1.8 Implementation

The suppression pool cleanliness program will be implemented prior to the initiation of the startup test program.

6.2.1.7.1.9 Corrective Action Program

Adverse conditions from the containment and strainer inspections will be documented in the STP 3 & 4 corrective action program to ensure they are properly addressed and to allow trending and analysis of results.

6.2.1.7.1.10 Audits

Periodic audits will be performed by the STP 3 & 4 Quality Assurance department on this program.

6.2.1.7.1.11 Operating Experience

Operating experience at other plants will be periodically assessed for lessons learned that could be applied to the STP 3 & 4 program.

6.2.2.3.1 System Operation and Sequence of Events

STD DEP T1 2.4-4

STD DEP 6.2-2

(4) ~~*Containment cooling is initiated after 10 minutes (see Response to Question 430.26).*~~ Containment cooling is initiated after 30 minutes.

Analysis of the net positive suction head (NPSH) available to the RHR and HPCF pumps in accordance with the recommendations of Regulatory ~~*Guide*~~ Guides *1.1* and 1.82 *is provided in Tables 6.2-2b and 6.2-2c, respectively.*

6.2.4.3.2.1.1.6 Recirculation Pump Seal Purge Water Supply Line

STD DEP 6.2-3

The evaluations for previous similar designs show that the consequences of breaking the line are less severe than those of failing an instrument line. The recirculation pump seal water line is 20A Quality Group B from the manual shutoff valve located close to the recirculation pump motor housing through the ~~*second*~~ excess flow *check valve (located outside the containment). From the* ~~*second*~~ *excess flow check valve to the CRD connection, the line is Quality Group D.* An orifice is located inside the containment and if ~~*If*~~ *the line is postulated to fail and* ~~*either one of*~~ *the* excess flow check valve ~~*check valves*~~ *is assumed not to close (single active failure), the flow rate through the broken line is calculated to be substantially less than permitted for a broken instrument line. Therefore,* ~~*the two check valves in series*~~ this configuration provides ~~*provide*~~ *sufficient isolation capability for postulated failure of the line.*

6.2.4.3.2.1.2 Effluent Lines

STD DEP Admin

Table ~~*6.2-3*~~ ~~*6.2.7*~~6.2-6 *contains those effluent lines that comprise the reactor coolant pressure boundary and which penetrate the containment.*

6.2.4.3.4 Evaluation of Containment Purge and Vent Valves Isolation Barrier Design

STD DEP T1 3.4-1

STD DEP 6.2-3

Protection of the containment purge system CIVs from the effects of flood and dynamic effects of pipe breaks will be provided in accordance with Sections 3.4 and 3.6. The CIVs are air-operated with pilot ~~DC~~ AC solenoid valve. The power to the ~~DC~~ AC solenoid valve is supplied from the ~~DC~~ Vital AC distribution system to the ~~demultiplexer~~ I/O device for the valve. Both the supply and return lines for the ~~DC~~ AC are fused at the ~~multiplexer~~ I/O device so that faults are isolated and do not propagate back up into the portions of the ~~DC~~ Vital AC system common with other systems. This is also discussed in the Fire Hazard Analysis in Section 9A.5.

6.2.5 Combustible Gas Control in Containment

STD DEP T1 2.14-1

The Atmospheric Control System (ACS) is provided to establish and maintain an inert atmosphere within the primary containment during all plant operating modes except during shutdown for refueling or equipment maintenance and during limited periods of time to permit access for inspection at low reactor power. ~~The Flammability Control System (FCS) is provided to control the potential buildup of hydrogen and oxygen from design basis metal water reaction and radiolysis of water. The objective of these systems is to preclude combustion of hydrogen causing damage to essential equipment and structures. The COL applicant is required to provide a comparison of costs and benefits for any optional alternate system of hydrogen control.~~

6.2.5.1 Design Bases

STD DEP T1 2.14-1

Since there is no design requirement for the ACS ~~or FCS~~ in the absence of a LOCA and since there is no design basis accident in the ABWR that results in core uncovery or fuel failures, the following requirements mechanistically assume that a LOCA producing the design basis quantities of hydrogen and oxygen has occurred. Following are criteria that serve as the bases for design:

(1) The hydrogen generation from metal-water reaction is defined in Regulatory Guide 1.7.

(2) The hydrogen and oxygen generation from radiolysis is defined in Regulatory Guide 1.7.

*(7) ~~The FCS is capable of controlling combustible gas concentrations in the containment atmosphere for the design bases LOCA without relying on purging and without releasing radioactive material to the environment.~~*Not Used

(8) The ACS ~~and FCS together are~~is designed to maintain an inert primary containment after the design-bases LOCA, assuming a single-active failure The backup purge function need not meet this criterion.

(12) The ACS is non-safety class except as necessary to assure primary containment integrity (penetrations, isolation valves). The ACS ~~and FCS are~~is designed and built to the requirements specified in Section 3.2.

6.2.5.2.1 General

STD DEP T1 2.14-1

The ~~FCS and~~ ACS ~~are systems~~system is designed to control the environment within the primary containment. ~~The FCS provides control over hydrogen and oxygen generated following a LOCA. In an inerted containment, mixing of any hydrogen generated is not required.~~ Any oxygen evolution from radiolysis is very slow such that natural convection and molecular diffusion is sufficient to provide mixing. Spray operation will provide further assurance that the drywell or wetwell is uniformly mixed. ~~The FCS consists of the following features:~~

~~(1) (1) The FCS has two recombiners installed in the secondary containment. The recombiners process the combustible gases drawn from the primary containment drywell.~~

~~(2) (2) The FCS is activated when a LOCA occurs. The oxygen and hydrogen remaining in the recombiners after having been processed are transmitted to the suppression pool.~~

The ACS provides and maintains an inert atmosphere in the primary containment during plant operation. The system is not designed as a continuous containment purging system. The ACS exhaust line isolation valves are closed when an inert condition in the primary containment has been established. The nitrogen supply makeup lines, compensating for leakage, provide a makeup flow of nitrogen to the containment. If a LOCA signal is received, the ACS valves close. Nitrogen purge from the containment occurs during shutdown for personnel access. Purging is accomplished with the containment inlet and exhaust isolation valves opened to the selected exhaust path and the nitrogen supply valves closed. Nitrogen is replaced by air in the containment (see Item (3) Shutdown-Deinerting below this subsection). The system has the following features:

(3) The redundant oxygen analyzer system (CAMS) measures oxygen in the drywell and suppression chamber. Oxygen concentrations are displayed in the main control room. ~~Description of safety-related display instrumentation for containment monitoring is provided in Chapter 7. Electrical requirements for equipment associated with the combustible gas control system are in accordance with the appropriate IEEE standards as referenced in Chapter 7.~~

The following interfaces with other systems are provided:

(1) Residual Heat Removal System (RHR): The RHR System provides postaccident suppression pool cooling, as necessary, following heat dumps to the pool, including the exothermic heat of reaction released by the design basis metal-water reaction. This heat of reaction is very small and has no real effect on pool temperature or RHR heat exchanger sizing. The wetwell spray portion of the RHR may be activated during a LOCA help mixing by reducing pocketing. Wetwell spray would also serve to accelerate deaeration of the suppression pool water, though the impact of the dissolved oxygen on wetwell airspace oxygen concentration is very small. ~~The RHR System also provides cooling water to the exhaust flow from the FCS.~~

(6) Containment Atmospheric Monitoring System: Monitors oxygen levels in the wetwell and drywell ~~during accident conditions~~ to confirm the primary containment oxygen level is kept within limits.

6.2.5.2.6.1 General

STD DEP 6.2-3

(6) The rupture disk is part of the primary containment boundary and is able to withstand the containment design pressure (309.9 kPa) with no leakage to the environment. It is also capable of withstanding full vacuum in the wetwell vapor space without leakage. The disk ruptures at 617.8 kPa due to overpressurization during a severe accident as required to assure containment structural integrity. As potential backup to a leaking, fractured or improperly sealed rupture disk, the two valves upstream of the disk can be closed. These valves are safety-related and are subjected to all testing required for normal isolation valves. The solenoids in these valves are ~~DC~~ powered by vital AC (VAC)*. These valves are capable of closing against pressures up to 617.8 kPaG.*

6.2.5.2.7 ~~*Flammability Control System*~~Not Used

STD DEP T1 2.14-1

~~*(1) All pressure-containing equipment, including piping between components is considered an extension of the containment, and designed to ASME Section III Safety Class 2 requirements. Independent drywell and suppression chamber penetrations are provided for the two recombiners. Each penetration has two normally closed isolation valves; one pneumatically operated and one motor operated. The system is designed to meet Seismic Category I requirements. The recombiners are in separate rooms in the secondary containment and are protected from damage by flood, fire, tornadoes and pipe whip.*~~

~~*(2) After a LOCA, the system is manually actuated from the control room when high oxygen levels are indicated by the containment atmospheric monitoring system (CAMS). (If hydrogen is not present, oxygen concentrations are controlled by nitrogen makeup.) Operation of either recombiner will provide*~~

~~*effective control over the buildup of oxygen generated by radiolysis after a design basis LOCA. Once placed in operation the system continues to operate until it is manually shut down when an adequate margin below the oxygen concentration design limit is reached.*~~

6.2.5.4 Tests and Inspections

STD DEP T1 2.14-1

Preoperational tests of the ACS ~~and FCS~~ are conducted during the final stages of plant construction prior to initial startup.

6.2.5.5 Instrumentation Requirements

STD DEP T1 2.14-1

As discussed in Subsection 6.2.5.2, ~~safety grade~~ oxygen monitoring is provided in the wetwell and drywell by the CAMS. This monitoring function, when used during normal operation, determines when the primary containment is inert and nitrogen purging may be terminated. It also determines when primary containment is de-inerted and personnel re-enter procedures may be initiated.

6.2.5.6 Personnel Safety

The following standard supplement addresses the COL License Information Item in this subsection of the reference ABWR DCD.

A special maintenance procedure provides the requirements for controlling purged drywell entry. This procedure contains the following elements:

(1) Inerting and de-inerting of the drywell is in conformance with applicable Technical Specifications.

(2) Personnel access to the drywell is normally prohibited at all times when the drywell has an oxygen-deficient atmosphere, unless an emergency condition arises, in which case the procedure outlined in Subsection 6.2.5.6(8) should be followed.

(3) The status of the drywell atmosphere is posted at the drywell entrance at all times, and the entrance locked, except when cleared for entry.

(4) Suitable authorization, control and recording procedures are established and remain in effect throughout the entry process.

(5) Prior to initial entry, the drywell is purged with air in accordance with operating procedure until drywell samples indicate that the following conditions are met:

(a) Oxygen: Greater than 16.5% content by volume.

(b) Hydrogen: Less than 14% of the lower limit of flammability, or a limit of 0.57% hydrogen by volume. (The lower flammability limit is 4.1% hydrogen content by volume.)

(c) Carbon Monoxide: Less than 100 ppm.

(d) Carbon Dioxide: Less than 5000 ppm.

(e) Airborne Activity: Less than applicable limits in 10 CFR 20, or equivalent.

(6) During the purge, drywell atmosphere samples are drawn from a number of locations when the drywell oxygen analyzer indicates an oxygen concentration of 16.5% or greater. Samples are analyzed for oxygen, hydrogen, carbon monoxide, carbon dioxide and airborne activity. When the results of two successive samples taken at least one-half hour apart are found to be within the conditions in Subsection 6.2.5.6(5), initial entry may be authorized.

(7) Criteria for entry are:

(a) The initial entry will require a minimum of two (2) persons.

(b) Initial entry will require, in addition to normal protective clothing and protective equipment consisting of self-contained breathing apparatus (such as Scott Air Pack), portable air sampling and monitoring equipment, and portable radiation survey meters.

(c) A means of communication shall be established.

(8) Under certain conditions, the Plant General Manager (or his designee) may deem that an emergency condition exists which would justify drywell entry with an oxygen deficient atmosphere.

(9) When it has been determined from the results of the initial entry survey and samples that the entire drywell atmosphere meets the required conditions, the drywell may be cleared for general access and the drywell status posted at the drywell entrance.

6.2.7 COL License Information

6.2.7.1 Alternate Hydrogen Control

The following standard supplement addresses COL License Information Item 6.2.

The NRC has revised 10 CFR 50.44 to amend its standards for combustible gas control in light-water-cooled power reactors. The amended rule eliminates the requirements for hydrogen recombiners and relaxes the requirements for hydrogen and oxygen monitoring. With the elimination of the requirement to provide hydrogen control equipment, the need to provide cost analysis for alternate control systems is also eliminated.

6.2.7.2 Administrative Control Maintaining Containment Isolation

The following standard supplement addresses COL License Information Item 6.3.

The necessary controls for maintaining the primary containment boundary in accordance with Subsection 6.2.6.3.1 are in various plant operating procedures which control operation, testing and maintenance requirements for containment barriers. These include administrative procedures for controlling access, surveillance and maintenance procedures for controlling testing and restoration of containment components and operating procedures for controlling the routine operation of containment valves and components.

6.2.7.3 Suppression Pool Cleanliness

The following standard supplement addresses COL License Information Item 6.4.

Subsection 6.2.1.7.1 provides a description of the operational program for Suppression Pool Cleanliness. This program will be implemented prior to Plant Startup as described in Table 13.4S-1 of Section 13.4S. The procedures that will implement this program will be complete and available for NRC review 60-days prior to startup testing (COM 6.2-1) .

6.2.7.4 Wetwell to Drywell Vacuum Breaker Protection

The following standard supplement addresses COL License Information Item 6.5.

The vacuum breakers are installed horizontally and located in the wetwell gas space. There is one valve per penetration (through the pedestal wall) with the valves opening into the lower drywell. The location protects vacuum breaker valves from being subjected to the cyclic pressure loading during LOCA steam condensation period. The location of these valves, both axially and azimuthally, is shown in Figures 1.2-3c and 1.2-13k. A Vacuum Breaker Shield (consisting of a solid "V" shaped plate) is provided below each vacuum breaker to protect the valves from LOCA pool swell loads. The pool swell loads in the wetwell space, where the vacuum breaker assemblies are exposed, are discussed in FSAR Appendix 3B.

6.2.7.5 Containment Penetration Leakage Rate Test (Type B)

The following standard supplement addresses COL License Information Item 6.5a.

Type B leakage rate tests are performed in conformance with 10 CFR 50 Appendix J for containment penetrations whose designs incorporate resilient seals, bellows, gaskets, or sealant compounds, airlocks and lock door seals, equipment and access hatch seals, and electrical canisters, and other such penetrations. The Containment Leakage Rate Program is described in Subsection 6.2.6.2.1.

6.2.8 References

STD DEP 6.2-2

6.2-5 “Implementation of ABWR DCD Methodology using GOTHIC for STP 3 and 4 Containment Design Analyses.” WCAP-17058, Westinghouse Electric Company, LLC, June 2009.

6.2-6 "Nuclear Maintenance Applications Center: Foreign Material Exclusion Guidelines", EPRI TR 1016315, Electric Power Research Institute, July 2008.

6.2-7 "Guidelines for Achieving Excellence in Foreign Materials Exclusion (FME)", INPO 07-008, Institute of Nuclear Power Operations, December 2007.

Table 6.2-1 Containment Parameters

Design Parameter	Design Value	Calculated Value[1]
1. Drywell pressure	309.9 kPaG	~~268.7 kPaG~~ 281.8 kPaG
2. Drywell temperature	171.1°C	~~170°C~~ 173.2°C[2]
3. Wetwell pressure	309.9 kPaG	~~179.5~~ 217.2
4. Wetwell temperature		
• Gas Space	~~103.9 °C~~104°C	~~98.9~~ 98.6°C
• Suppression pool	~~97.2~~ 100°C	~~96.9~~ 99.6°C
5. Drywell-to-wetwell differential pressure	+172.6 kPaD -13.7 kPaD	~~+109.8 kPaG~~ +148.3 kPaD - 10.7 kPaG

1 Calculated values from Ref 6.2-5

2 Calculated drywell maximum temperature exceeds design temperature for only 2 seconds. See discussion in Section 6.2.1.1.2.1.

Table 6.2-2 Containment Parameters

	Drywell	Wetwell
A. Drywell and Wetwell		
1. Internal Design Pressure (kPaG)	309.9	~~309.96~~309.9
3. Design Temperature (°C)	171.1	~~103.9~~104
B. Vent System		
5. Vent Loss Coefficient (Varies with number of vents open)		~~2.5 - 3.5~~ ‡

‡ Provided in Section 6.1 of Reference 6.2-5.

Table 6.2-2b Net Positive Suction Head (NPSH) Available to RHR Pumps

A. *Suppression pool is at its minimum depth, El. –3740 mm.*

B. ~~*Centerline of pump suction*~~**NPSH Reference level** *is at El. –7200 mm******.

C. *Suppression pool water is at its maximum temperature for the given operating mode, 100°C.*

D. *Pressure is atmospheric above the suppression pool.*

E. *Minimum suction strainer area as committed to by Appendix 6C methods.*

NPSH available = $H_{ATM} + H_S - H_{VAP} -$ ~~H_F~~**($H_F + H_{ST}$)**

where:

H_{ATM}*= Atmospheric head*

H_S*= Static head*

H_{VAP}*= Vapor pressure head*

H_F*= Maximum Frictional head* ~~*including strainer allowed*~~**excluding strainer frictional head**

H_{ST} = Strainer frictional head

Minimum Expected NPSH

RHR Pump Runout is 1130 m^3/h.

Maximum suppression pool temperature is 100°C.

H_{ATM}~~*=10.78m*~~**10.77m**

H_S*=3.46m*

H_{VAP} ~~*=10.78m*~~**10.77m**

~~H_F*=0.71m*~~

NPSH available = ~~*10.78 + 3.46 – 10.78 – 0.71 = 2.75m*~~**10.77 + 3.46 - 10.77 - ($H_F + H_{ST}$) =3.46 - ($H_F + H_{ST}$)**

NPSH required = ~~*2.4m*~~**2.0m**

Margin =~~*0.35m*~~**1.46 - ($H_F + H_{ST}$)=** *NPSH available – NPSH required*

*** NPSH Reference level is 1m above the pump floor level**

**** The final system design will meet the required NPSH with adequate margin.**

Table 6.2-2c Net Suction Head (NPSH) Available to HPCF Pumps

A. *Suppression pool is at its minimum depth, El. –3740 mm.*

B. *Centerline of pump suction***NPSH Reference level** *is at El. –7200 mm******.*

C. *Suppression pool water is at its maximum temperature for the given operating mode, 100°C.*

D. *Pressure is atmospheric above the suppression pool.*

E. *Minimum suction strainer area as committed to by Appendix 6C methods.*

NPSH available = $H_{ATM} + H_S - H_{VAP} -$ ~~H_F~~ $(H_F + H_{ST})$

Where:

H_{ATM}*=Atmospheric head*

H_S *= Static head*

H_{VAP} *= vapor pressure head*

H_F *= Maximum Frictional head* ~~*including strainer allowed*~~**excluding strainer frictional head**

H_{ST} = Strainer frictional head

Minimum Expected NPSH

HPCF Pump Runout is 890 m^3/h.

Maximum suppression pool temperature is 100°C

H_{ATM} = ~~*10.78m*~~**10.77m**

H_S = *3.46m*

H_{VAP} = ~~*10.78m*~~**10.77m**

~~H_F = *0.91m*~~

NPSH available = ~~*10.78 + 3.46 – 10.78 – 0.91 = 2.55m*~~ $10.77 + 3.46 - 10.77 - (H_F + H_{ST}) = 3.46 - H_F - + H_{ST})$

NPSH required = ~~*2.2m*~~**1.7 m**

Margin = ~~*0.35*~~*1.76 -* $(H_F + H_{ST}) =$ *NPSH available – NPSH required*

***NPSH Reference level is 1m above the pump floor level**

**** The find system design will meet the required NPSH with adequate margin.**

Table 6.2-5 Reactor Coolant Pressure Boundary (RCPB) Influent Lines Penetrating Drywell

Drywell	Inside Drywell	Outside Drywell
Influent Line		
5. Reactor water cleanup, reactor vessel head spray	~~MOV~~ **CV**	**MOV**
6. Recirculating internal pump seal purge water supply	~~CV~~N/A	~~CV~~EFCV

Note:
EFCV - Excess flow check valve

Table 6.2-6 Reactor Coolant Pressure Boundary (RCPB) Effluent Lines Penetrating Drywell

Inside Drywell	Outside Drywell	Drywell
Effluent Line		
1. Main steam	~~GOV~~AOV	GOV

Note:
AOV-Air operated valve. Air to open, and Air and/or spring to close.

Table 6.2-7 Containment Isolation Valve Information Reactor Recirculation System RIP Purge

Valve No.	B31-F008A-H/J/K
Line Size	~~15A~~20A

Table 6.2-7 Containment Isolation Valve Information*

MPL	System	Page
~~T49~~	~~Flammability Control~~	~~Page 6.2 155 and 6.2 156~~

Table 6.2-7 Containment Isolation Valve Information Standby Liquid Control System

Valve No.	*C41-F008*	*C41-F006A*	*C41-F006B*
Type C Leak Test	~~No (w)~~ **Yes**	~~No (w)~~ **Yes**	~~No (w)~~ **Yes**

Table 6.2-7 Containment Isolation Valve Information ~~(Continued)~~
Containment Atmospheric Monitoring

Valve No.	**D23-F001A/B**	**D23-F004A/B**	**D23-F005A/B**	**D23-F006A/B**	**D23-F007A/B**	**D23-F008A/B**
Normal Position	Open	Close/**Open**	Close/**Open**	Close/**Open**	Close/**Open**	Close/**Open**
Containment Isolation Signal(c)	~~N/A~~ **RM**	~~N/A~~ **RM**	~~N/A~~ **RM**	~~N/A~~ **RM**	~~N/A~~ **RM**	~~N/A~~ **RM**

Table 6.2-7 Containment Isolation Valve Information ~~(Continued)~~

Residual Heat Removal System Wetwell Spray

Valve No.	**E11-F019B**	**E11-F019C**
Post-accident Position	Close**/Open**	Close**/Open**
Closure Time (s)	~~20~~ ~~**34**~~**20**	~~20~~ ~~**34**~~**20**

Residual Heat Removeal System Drywell Spray

Valve No.	**E11-F017B**	**E11-F018B**	**E11-F017C**	**E11-F018C**
Post-accident Position	Close**/Open**	Close**/Open**	Close**/Open**	Close**/Open**

Residual Heat Removal System Minimum Flow Line

Valve No.	**E11-F021A**	**E11-F021B**	**E11-F021C**
Shutdown Position	~~Open~~ **Close**	~~Open~~ **Close**	~~Open~~ **Close**

Residual Heat Removal System S/P Cooling

Valve No.	**E11-F008A**		**E11-F008B**		**E11-F008C**
Line Size	~~200A~~ **250A**		~~200A~~ **250A**		~~200A~~ **250A**

Residual Heat Removal System S/P Suction (LPFL)

Valve No.	**E11-F001A**	**E11-F001B**	**E11-F001C**
Post-accident Position	~~Close~~ **Open**	~~Close~~ **Open**	~~Close~~ **Open**

Residual Heat Removal System Inboard Shutdown Cooling

Valve No.	**E11-F010A**	**E11-F010B**	**E11-F010C**
Shutdown Position	~~***Close***~~**Open/Close**	~~***Close***~~**Open/Close**	~~***Close***~~**Open/Close**

Containment Isolation Valve Information

Residual Heat Removal System Outboard Shutdown Cooling

Valve No.	**E11-F011A**	**E11-F011B**	**E11-F011C**
Shutdown Position	~~***Close***~~**Open/Close**	~~***Close***~~**Open/Close**	~~***Close***~~**Open/Close**

Table 6.2-7 Containment Isolation Valve Information ~~(Continued)~~

Residual Heat Removal System Injection and Testable Check

Valve No.	**E11-F005B**	**E11-F006B**	**E11-F005C**	**E11-F006C**
Post-accident Position	Close/**Open**	Close/**Open**	Close/**Open**	Close/**Open**

High Pressure Core Flooder System S\P Suction

Valve No.	**E22-F006B**	**E22-F006C**
Post-Accident Position	Close/**Open**	Close/**Open**
Containment Isolation Signal (c)	~~N/A~~ **RM**	~~N/A~~ **RM**

High Pressure Core Flooder System Test and Minimum Flow

Valve No.	**E22-F009B**	**E22-F010B**	**E22-F009C**	**E22-F010C**
Containment Isolation Signal (c)	~~N/A~~ **RM**	~~N/A~~ **RM**	~~N/A~~ **RM**	~~N/A~~ **RM**

High Pressure Core Flooder System Injection

Valve No.	**E22-F003B**	**E22-F004B**	**E22-F003C**	**E22-F004C**
Post-Accident Position	Close/**Open**	Close/**Open**	Close/**Open**	Close/**Open**

Nuclear Boiler System Main Steam Lines A, B, C and D

Valve No.	**B21-F008A/B C/D**	**B21-F009A/B C/D**
ESF	~~Yes~~ **No**	~~Yes~~ **No**
Type C Leak Test	Yes(e)~~(t)~~	Yes(e)~~(t)~~
Primary Actuation	*N_2 to open* *N_2 and/or Spring to close*	*~~N_2~~Air to open* *~~N_2~~Air and/or Spring to close*
Containment Isolation Signal (c)	C, ~~D~~, E, F, H, N, BB, RM	C, ~~D~~, E, F, H, N, BB, RM

Table 6.2-7 Containment Isolation Valve Information ~~(Continued)~~

Nuclear Boiler System Main Steam Line Drains

Valve No.	B21-F011	B21-F012
ESF	~~Yes~~ **No**	~~Yes~~ **No**
Type C Leak Test	Yes(e)~~(t)~~	Yes(e)~~(t)~~
Normal Position	~~*Open/**Close***~~ *Open*	~~*Open/**Close***~~ *Open*
Containment Isolation Signal (c)	C, ~~*D*~~, E, F, H, N, BB, RM	C, ~~*D*~~, E, F, H, N, BB, RM
Power Source (Div)	~~*II*~~ ~~***I***~~ **II**	~~*I*~~ ~~***II***~~ **I**

Nuclear Boiler System Feedwater Line A and B

Valve No.	B21-F004A/B	B21-F003A/B
Type C Leak Test	Yes ~~(t)~~	Yes ~~(t)~~
Shutdown Position	~~*Close*~~Open/Close	~~*Close*~~Open/Close
Post-Accident Position	~~*Close*~~Open/Close	~~*Close*~~Open/Close

Reactor Core Isolation Cooling System Steam Supply

Valve No.	E51-F035	E51-F048	E51-F036
Type C Leak Test	Yes(e) ~~(t)~~	Yes(e) ~~(t)~~	Yes ~~(t)~~
Post-Accident Position	~~*Close*~~Open/Close	~~*Close*~~Open/Close	~~*Close*~~Open/Close

Reactor Core Isolation Cooling System S/P Suction

Valve No.	E51-F006
Post-Accident Position	~~*Close*~~Close/Open

Reactor Core Isolation Cooling System Turbine Exhaust

Valve No.	E51-F039	E51-F038
Type C Leak Test	Yes(e) ~~(t)~~	Yes~~(t)~~
Shutdown Position	*Open*	~~*Open*~~Close

Table 6.2-7 Containment Isolation Valve Information ~~(Continued)~~
~~Reactor Core Isolation Cooling System Vacuum Pump Discharge~~

~~Valve No.~~	~~E51-F047~~	~~E51-F046~~
~~Tier 2 Figure~~	~~5.4-8 (Sheet 1)~~	~~5.4-8 (Sheet 1)~~
~~Applicable Basis~~	~~GDC 56~~	~~GDC 56~~
~~Fluid~~	~~Steam~~	~~Steam~~
~~Line Size~~	~~50A~~	~~50A~~
~~ESF~~	~~Yes~~	~~Yes~~
~~Leakage Class~~	~~(a)~~	~~(a)~~
~~Location~~	~~O~~	~~O~~
~~Type C Leak Test~~	~~No(l)~~	~~No(l)~~
~~Valve Type~~	~~Gate~~	~~Check~~
~~Operator~~	~~Motor~~	~~Self~~
~~Primary Actuation~~	~~Electrical~~	~~N/A~~
~~Secondary Actuation~~	~~Manual~~	~~N/A~~
~~Normal Position~~	~~Open~~	~~Close~~
~~Shutdown Position~~	~~Open~~	~~Open~~
~~Post Accident Position~~	~~Close~~	~~Close~~
~~Power Fail Position~~	~~As is~~	~~N/A~~
~~Containment Isolation Signal (c)~~	~~RM~~	~~N/A~~
~~Closure Time (s)~~	~~<10~~	~~Instantaneous~~
~~Power Source (Div)~~	~~I~~	~~N/A~~
~~See page 6.2-167 for notes~~		

Table 6.2-7 Containment Isolation Valve Information ~~(Continued)~~
Atmospheric Control System

Valve No.	T31-F001	T31-F002	T31-F003	T31-F004	T31-F005	T31-F006	T31-F007
Line Size	~~550A~~ ~~500A~~550A	~~550A~~ ~~500A~~550A	~~550A~~ ~~500A~~550A	~~550A~~ ~~500A~~550A	50A	~~550A~~ ~~500A~~550A	250A
Containment Isolation Signal (c)	A, K, XX, YY, **RM**	A, K, XX, YY, **RM**	A, K, XX, YY, **RM**	A, K, XX, YY, **RM**	A, K, XX, YY, **RM**	A, K, XX, YY, **RM**	RM

Atmospheric Control System

Valve No.	T31-F008	T31-F009	T31-F025	T31-F039	T31-F040	T31-F041
Line Size	~~550A~~ ~~500A~~550	~~550A~~ ~~500A~~550A	400A	50A	50A	50A
Leakage Class	~~(b)~~ **(a)**	~~(b)~~ **(a)**	~~(b)~~ **(a)**	~~(b)~~ **(a)**	~~(b)~~ **(a)**	~~(b)~~ **(a)**
Type C Leak Test	Yes **(b)**	Yes **(b)**~~)~~	Yes **(b)**	Yes **(b)**	Yes~~(e)~~	Yes~~(e)~~
Containment Isolation Signal (c)	A, K, XX, YY, **RM**	A, K, XX, YY, **RM**	A, K, XX, YY, **RM**	A, K, XX, YY, **RM**	A, K, XX, YY, **RM**	A, K, XX, YY, **RM**
Closure Time (s)	<20	<~~20~~ **15**	<20	<15	<15	<15

Atmospheric Control System

Valve No.	T31-F731	T31-~~F033A/B~~ F733A/B	T31-F~~035A-D~~ F735A-D	T31-F010	T31-F011
Line Size	20A	20A	20A	250A	~~550A~~ ~~500A~~550A
Containment Isolation Signal (c)	RM	RM	RM	RM	A, K XX, YY, **RM**

Atmospheric Control System

Valve No.	T31-F805A/B	T31-D001	T31-D002
Type C Leak Test	No(m)	No~~(P)~~ **(p)**	No~~(P)~~ **(p)**

Table 6.2-7 Containment Isolation Valve Information ~~(Continued)~~
~~Flammability Control System~~

~~Valve No.~~	~~T49-F001C~~	~~T49-F001B~~	~~T49-F002A~~	~~T49-F002E~~
~~Tier 2 Figure~~	~~6.2-40 (Sheet 2)~~	~~6.2-40 (Sheet 1)~~	~~6.2-40 (Sheet 1)~~	~~6.2-40 (Sheet 2)~~
~~Applicable Basis~~	~~GDC 56~~	~~GDC 56~~	~~GDC 56~~	~~GDC 56~~
~~Fluid~~	~~DW Atmosphere~~	~~DW Atmosphere~~	~~DW Atmosphere~~	~~DW Atmosphere~~
~~Line Size~~	~~100A~~	~~100A~~	~~100A~~	~~100A~~
~~ESF~~	~~Yes~~	~~Yes~~	~~Yes~~	~~Yes~~
~~Leakage Class~~	~~(a)~~	~~(a)~~	~~(a)~~	~~(a)~~
~~Location~~	~~O~~	~~O~~	~~O~~	~~O~~
~~Type C Leak Test~~	~~No(u)~~	~~No(u)~~	~~No(u)~~	~~No(u)~~
~~Valve Type~~	~~Gate~~	~~Gate~~	~~Gate~~	~~Gate~~
~~Operator~~	~~Motor~~	~~Motor~~	~~Pneumatic~~	~~Pneumatic~~
~~Primary Actuation~~	~~Electrical~~	~~Electrical~~	~~Electrical~~	~~Electrical~~
~~Secondary Actuation~~	~~Manual~~	~~Manual~~	~~Manual~~	~~Manual~~
~~Normal Position~~	~~Close~~	~~Close~~	~~Close~~	~~Close~~
~~Shutdown Position~~	~~Close~~	~~Close~~	~~Close~~	~~Close~~
~~Post-Accident Position~~	~~Open~~	~~Open~~	~~Open~~	~~Open~~
~~Power Fail Position~~	~~As is~~	~~As is~~	~~As is~~	~~As is~~
~~Containment Isolation Signal(c)~~	~~A,K~~	~~A,K~~	~~A,K~~	~~A,K~~
~~Closure Time (s)~~	~~<30~~	~~<30~~	~~<30~~	~~<30~~
~~Power Source (Div)~~	~~III~~	~~II~~	~~I, III~~	~~I, II~~
~~See page 6.2-167 for notes~~				

Table 6.2-7 Containment Isolation Valve Information ~~(Continued)~~
~~Flammability Control System~~

~~Valve No.~~	~~T49-F006A~~	~~T49-F006E~~	~~T49-F007C~~	~~T49-F007B~~
~~Tier 2 Figure~~	~~6.2-40 (Sheet 1)~~	~~6.2-40 (Sheet 2)~~	~~6.2-40 (Sheet 2)~~	~~6.2-40 Sheet 1)~~
~~Applicable Basis~~	~~GDC 56~~	~~GDC 56~~	~~GDC 56~~	~~GDC 56~~
~~Fluid~~	~~WW Atmosphere~~	~~WW Atmosphere~~	~~WW Atmosphere~~	~~WW Atmosphere~~
~~Line Size~~	~~150A~~	~~150A~~	~~150A~~	~~150A~~
~~ESF~~	~~Yes~~	~~Yes~~	~~Yes~~	~~Yes~~
~~Leakage Class~~	~~(a)~~	~~(a)~~	~~(a)~~	~~(a)~~
~~Location~~	~~O~~	~~O~~	~~O~~	~~O~~
~~Type C Leak Test~~	~~No(u)~~	~~No(u)~~	~~No(u)~~	~~No(u)~~
~~Valve Type~~	~~Gate~~	~~Gate~~	~~Gate~~	~~Gate~~
~~Operator~~	~~Pneumatic~~	~~Pneumatic~~	~~Motor~~	~~Motor~~
~~Primary Actuation~~	~~Electrical~~	~~Electrical~~	~~Electrical~~	~~Electrical~~
~~Secondary Actuation~~	~~Manual~~	~~Manual~~	~~Manual~~	~~Manual~~
~~Normal Position~~	~~Close~~	~~Close~~	~~Close~~	~~Close~~
~~Shutdown Position~~	~~Close~~	~~Close~~	~~Close~~	~~Close~~
~~Post-Accident Position~~	~~Open~~	~~Open~~	~~Open~~	~~Open~~
~~Power Fail Position~~	~~As is~~	~~As is~~	~~As is~~	~~As is~~
~~Containment Isolation Signal(c)~~	~~A,K~~	~~A,K~~	~~A,K~~	~~A,K~~
~~Closure Time (s)~~	~~<30~~	~~<30~~	~~<30~~	~~<30~~
~~Power Source (Div)~~	~~I, III~~	~~I, II~~	~~III~~	~~II~~
~~See page 6.2-167 for notes~~				

Table 6.2-7 Containment Isolation Valve Information ~~(Continued)~~
Reactor Water Cleanup System

Valve No.	**G31-F071**	**G31-F072**
Tier 2 Figure	5.4-12 (Sheet 1)	5.4-12 (Sheet 1)
Applicable Basis	GDC55	GDC55
Fluid	RPV H_2O	RPV H_2O
Line Size	20A	20A
ESF	No	No
Leakage Class	(a)	(a)
Location	I	O
Type C leak Test	Yes	Yes
Valve Type	Globe	Globe
Operator	Pneumatic	Pneumatic
Primary Actuation	Electrical	Electrical
Secondary Actuation	Manual	Manual
Normal Position	Close	Close
Shutdown Position	Close	Close
Post-accident Position	Close	Close
Power Fail Position	Close	Close
Containment Isolation Signal(c)	C,E,F,H,N,BB,RM	C,E,F,H,N,BB,RM
Closure Time(s)	<15	<15
Power Source (Div)	II	I
See page 6.2-167 for notes		

Table 6.2-7 Containment Isolation Valve Information
Suppression Pool Cleanup System

Valve No.	G51-F001	G51-F002	G51-F006	G51-F007
Applicable Basis	GDC ~~56 57~~56	GDC ~~56 57~~**56**	GDC ~~56 57~~**56**	GDC ~~56 57~~**56**
ESF	~~Yes~~ **No**	~~Yes~~ **No**	~~Yes~~ **No**	~~Yes~~ **No**
Type C Leak Test	No~~(p) (r)~~**(q)**	No~~(p) (r)~~**(q)**	No~~(q)~~**(r)**	No~~(q)~~**(r)**
Shutdown Position	Open **/Close**	Open **/Close**	Open /**Close**	Open **/Close**
Post-Accident Position	Close	Close	~~N/A~~ Close	Close
Containment Isolation Signal(c)	A,K,**X,RM**	A,K,**X,RM**	A,K,**X,RM**	A,K,**X,RM**
Closure Time (s)	~~<30~~ ~~**45**~~**<30**	<~~30~~ **45**~~**<30**~~	Inst.	~~<30~~ ~~**60**~~**<30**

Reactor Building Cooling Water System

Valve No.	P21-F075A /F076A	P21-F081A /F080A	P21-F075B /F076B	P21-F081B /F080B
Applicable Basis	GDC ~~57~~ **56**	GDC ~~57~~ **56**	GDC ~~57~~ **56**	GDC ~~57~~ **56**
Leakage Class	~~(b)~~ **(a)**	~~(b)~~ **(a)**	~~(b)~~ **(a)**	~~(b)~~ **(a)**
Type C Leak Test	No~~(s)~~ (t)	No~~(s)~~ (t)	No~~(s)~~ (t)	No~~(s)~~ (t)
Post-Accident Position	Close**/Open**	Close**/Open**	Close**/Open**	Close**/Open**

HVAC Normal Cooling Water System

Valve No.	P24-F053	P24-F054	P24-F~~0~~142	P24-F~~0~~141
Applicable Basis	GDC ~~57~~ **56**	GDC ~~57~~ **56**	GDC ~~57~~ **56**	GDC ~~57~~ **56**
Leakage Class	~~(b)~~ **(a)**	~~(b)~~ **(a)**	~~(b)~~ **(a)**	~~(b)~~ **(a)**
Containment Isolation Signal(c)	CX,K**,RM**	N/A	CX,K**,RM**	CX,K**,RM**
Power Source (Div)	I	N/A	~~I~~ ~~**II**~~ **I**	~~III~~ ~~**I**~~ **II**

Table 6.2-7 Containment Isolation Valve Information (Continued)

Service Air System

Valve No.	**P51-F131**	**P52-F132**
Applicable Basis	GDC ~~57~~ **56**	GDC ~~57~~**56**
See page 6.2-167 for notes		

Instrument Air System

Valve No.	**P52-F276**	**P52-F277**
Applicable Basis	GDC ~~57~~ **56**	GDC ~~57~~ **56**

High Pressure Nitrogen Gas Supply System

Valve No.	**P54-F007A/F008A**	**P54-F007B/F008B**	**P54-F200/F209**
Applicable Basis	GDC ~~57~~ **56**	GDC ~~57~~ **56**	GDC ~~57~~ **56**
Leakage Class	~~(b)~~ **(a)**	~~(b)~~ **(a)**	~~(b)~~ **(a)**
Type C Leak Test	No~~(r)~~ **(s)**	No~~(r)~~ **(s)**	No~~(r)~~ **(s)**
Containment Isolation Signal(c)	~~GG(Y)~~N/A	~~GG(Y)~~N/A	~~GG(Y)~~N/A

Leak Detection & Isolation System

Valve No.	**E31-F002**	**E31-F003**	**E31-F004**	**E31-F005**	**E31-F009/ F010**
Type C Leak Test	Yes(e)	Yes(e)	Yes(e)	Yes(e)	Yes(e) ~~(t)~~
Containment Isolation Signal(c)	B,K,**RM**	B,K,**RM**	B,K,**RM**	B,K,**RM**	N/A

Table 6.2-7 Containment Isolation Valve Information ~~(Continued)~~
Radwaste System

Valve No.	**K17-F003**	**K17-F004**	**K17-F103**	**K17-F104**
Applicable Basis	GDC ~~57~~ **56**	GDC ~~57~~ **56**	GDC ~~57~~ **56**	GDC ~~57~~ **56**
Type C Leak Test	No~~(v)~~ (w)	No~~(v)~~ (w)	No~~(v)~~ (w)	No~~(v)~~ (w)
Containment Isolation Signal(c)	A/~~FF~~ ,**K,RM**	FF,**A,K,RM**	A/~~FF~~ ,**K,RM**	FF,**A,K,RM**

Table 6.2-7 Breathing Air System

Valve No.	~~P56-F001~~P81-F251	~~P56-F002~~P81-F252
Tier 2 Figure	9.3-10	9.3-10
Applicable Basis	GDC 56	GDC 56
Fluid	Air	Air
Line Size	40A	40A
ESF	No	No
Leakage Class	~~(a)~~(b)	~~(a)~~(b)
Location	O	I
Type C Leak Test	Yes	Yes
Valve Type	Globe	~~Check~~Globe
Operator	~~Manual~~HW	~~None~~HW
Primary Actuation	~~Electrical~~ Manual	~~Electrical~~Manual
Secondary Actuation	~~Manual~~NA	~~Manual~~ NA
Normal Position	Close	Close
Shutdown Position	Close/Open	Close/Open
Post-Accident Position	Close	Close
Power Fail Position	~~As is~~NA	~~As is~~NA
Containment Isolation Signal(c)	NA	NA
Closure Time (s)	NA	NA
Power Source (Div)	NA	NA
See page 6.2-167 for notes		

Table 6.2-7 Containment Isolation Valve Information (Continued)
Neutron Monitoring System

Valve No.	C51-J004A	C51-J004B	C51-J004C	C51-J011
Tier 2 Figure	7.6-2 (Sheet 3)	7.6-2 (Sheet 3)	7.6-2 (Sheet 3)	7.6-2 (Sheet 3)
Applicable Basis	GDC57	GDC57	GDC57	GDC57
Fluid	N_2	N_2	N_2	N_2
Line Size	OD15	OD15	OD15	20A
ESF	No	No	No	No
Leakage Class	(a)	(a)	(a)	(a)
Location	O	O	O	O
Type C leak Test	Yes	Yes	Yes	Yes
Valve Type	Ball	Ball	Ball	Globe
Operator	Motor	Motor	Motor	Solenoid
Primary Actuation	Electrical	Electrical	Electrical	Electrical
Secondary Actuation	N/A	N/A	N/A	N/A
Normal Position	Close	Close	Close	Close
Shutdown Position	Close	Close	Close	Close
Post-accident Position	Close	Close	Close	Close
Power Fail Position	Close	Close	Close	Close
Containment Isolation Signal(c)	A,K	A,K	A,K	A,K
Closure Time(s)	<3	<3	<3	Instantaneous
Power Source (Div)	N/A	N/A	N/A	N/A
See page 6.2-167 for notes				

Notes:
(c) Isolation Signal Codes

Signal	Description
~~D~~	~~High radiation- main steamline.~~
~~M~~	~~Line bleak in RHR shutdown.~~
T	High pressure RCIC turbine exhaust ~~diaphragm~~

(v) ~~Flammability control is a closed loop, safety-grade system required to be functional post-accident. Whatever is leaking (if any) is returned to the primary containment. In addition, during ILRT, these valves are opened and the lines are subjected to Type A test.~~Not Used

Table 6.2-8 Primary Containment Penetration List*

Penetration Number	Name	Elevation (mm)	Azimuth (deg)	Offset (mm)	Diameter (mm)	Barrier Type	Testing†‡
X-5	L/D Personnel Hatch	-650	0	0	2400/~~5000~~ **4300**	Door	B
X-6	L/D Equipment Hatch	-900	180	0	2400/~~5000~~ **4300**	Door	B
X-10A	Mainsteam Line	16300	0	1400	1200	**Valve**	~~A~~ **C**
X-10B	Mainsteam Line	16300	0	4200	1200	**Valve**	~~A~~ **C**
X-10C	Mainsteam Line	16300	0	-4200	1200	**Valve**	~~A~~ **C**
X-10D	Mainsteam Line	16300	0	-1400	1200	**Valve**	~~A~~ **C**
X-11	Mainsteam Drain	13650	0	5200	500	**Valve**	~~A~~ **C**
X-12A	Feedwater Line	13810	0	2800	950	**Valve**	~~A~~ **C**
X-12B	Feedwater Line	13810	0	-2800	950	**Valve**	~~A~~ **C**
X-22	Borated Water Injection	15250	275	0	450	**Valve**	A
X-30B	Drywell Spray	14680	260	-3400	200	**Valve**	A
X-30C	Drywell Spray	14680	100	3400	200	**Valve**	A
X-31A	HPCF (B)	14630	260	0	600	**Valve**	A
X-31B	HPCF (C)	14630	100	0	600	**Valve**	A
X-32A	LPFL (B) RHR (B)	14610	260	-2000	650	**Valve**	A
X-32B	LPFL (C) RHR (C)	14610	100	-1800	650	**Valve**	A
X-33A	RHR Suction (A)	14550	80	-800	750	**Valve**	A
X-33B	RHR Suction (B)	14550	260	1800	750	**Valve**	A
X-33C	RHR Suction (C)	14550	100	2000	750	**Valve**	A
X-37	RCIC Turbine Steam	~~14450~~ **14414**	80	1200	550	**Valve**	~~A~~ **C**
X-38	RPV Head Spray	14450	310	1500	550	**Valve**	~~A~~ **C**
X-50	CUW Pump Feed	14480	310	0	600	**Valve**	~~A~~ **C**
X-60	MUWP Suction	13500	290	0	200	**Valve**	~~A~~ **C**
X-61	RCW Suction (A)	~~13500~~**13700**	45	-3000	200	**Valve**	A
X-62	RCW Return (A)	~~13500~~**13700**	45	-2000	200	**Valve**	A
X-63	RCW Suction (B)	13500	225	3400	200	**Valve**	A
X-64	RCW Return (B)	13500	225	2400	200	**Valve**	A
X-65	HNCW Suction	13500	225	250	350	**Valve**	~~A~~ **C**
X-66	HNCW Return	13500	225	1400	350	**Valve**	~~A~~ **C**
X-69	SA	19000	42	0	90	**Valve**	~~A~~ **C**

Table 6.2-8 Primary Containment Penetration List*

Penetration Number	Name	Elevation (mm)	Azimuth (deg)	Offset (mm)	Diameter (mm)	Barrier Type	Testing†‡
X-70	IA	~~9000~~ **19000**	46	0	200	**Valve**	~~A~~ **C**
X-71A	*ADS Accumulator (A)*	*19000*	*50*	*0*	*200*	**Valve**	A
X-71B	*ADS Accumulator (B)*	*19000*	*296.5*	*1000*	*200*	**Valve**	A
X-72	*Relief Valve Accumulator*	*19000*	*296.5*	*2000*	*200*	**Valve**	A
X-80	Drywell Purge Suction	13700	68	0	~~550~~ ~~500~~550	**Valve**	~~A~~ **C**
X-81	Drywell Purge Exhaust	19000	216	0	~~550~~ ~~500~~550	**Valve**	~~A~~ **C**
X-82	~~FCS Suction~~ **Spare**	14850	225	-600	150	**Welded Cap**	~~A~~ ~~C~~ **A**
X-90	Spare	20100	~~46~~ 50	0	400	**Welded Cap**	~~C~~ A
X-91	Spare	20100	296.5	1000	~~400~~ **300**	**Welded Cap**	~~C~~ A
X-92	Spare	~~16400~~ 14700	~~45~~ ~~55~~ 45	~~12700~~ -1000	~~400~~ **300**	**Welded Cap**	~~C~~ A
X-93	Spare	14700	135	-500	400	**Welded Cap**	~~C~~ A
X-94	**Spare**	**16400**	**300**	**-500**	**400**	**Welded Cap**	~~C~~ A
X-95	**Spare**	**9400**	**45**	**-400**	**400**	**Welded Cap**	~~C~~ A
X-100A	RIP Power	~~13500~~ ~~16400~~13500	~~55~~ ~~51~~ 55	-1100	450	O-ring	B
X-100B	RIP Power	~~13500~~ ~~16400~~13500	180	~~2650~~ 2725	450	O-ring	B
X-100C	RIP Power	~~13500~~ ~~16400~~13500	180	-6550	~~450~~ **300**	O-ring	B
X-100D	RIP Power	~~13500~~ ~~16400~~13500	280	0	450	O-ring	B
X-100E	RIP Power	~~13500~~ ~~16400~~13500	~~180~~ ~~281~~180	~~-2650~~ -2725	450	O-ring	B
X-100F	RIP Power	~~16400~~ **13500**	~~51~~ 280	~~2800~~ 1350	450	O-ring	B
X-101A	LP Power	16400	~~45~~ ~~51~~ 45	0	~~300~~ **450**	O-ring	B
X-101B	LP Power	16400	180	~~50~~125	~~300~~ **450**	O-ring	B
X101C	LP Power	16400	180	~~1350~~ -1425	300	O-ring	B
X-101D	FMCRD Power	~~19000~~ ~~20100~~ 19000	~~279.5~~ 279 81	~~1350~~ -1350	300	O-ring	B

Table 6.2-8 Primary Containment Penetration List* (Continued)

Penetration Number	Name	Elevation (mm)	Azimuth (deg)	Offset (mm)	Diameter (mm)	Barrier Type	Testing†‡
X-101E	FMCRD Power	~~19000~~ ~~*20100*~~ ***19000***	~~***81***~~**260.5**	-1350	300	O-ring	B
X-101F	*FMCRD Power*	~~*19000*~~	**279.5** ~~***260.5***~~	**1350** ~~***-1350***~~	*300*	O-ring	B
X-101G	FMCRD Power	~~19000~~ ***19000***	99	~~***-1350***~~ **1350**	300	O-ring	B
X-101J	*LP Power*	~~*16700*~~	180	*5250*	*300*	*O-ring*	*B*
X-101K	*LP Power*	~~*16400*~~	45	*3900*	*300*	*O-ring*	*B*
X-102A	I & C	16400	~~45~~ ~~***51***~~**45**	-1350	300	O-ring	B
X-102B	I & C	16400	180	~~***1350***~~ **1425**	~~300~~ **450**	O-ring	B
X-102C	I & C	~~16400~~ ~~*763016400*~~	~~180~~ ~~***220***~~**180**	~~***-2650***~~ **-2725**	300	O-ring	B
X-102D	I & C	~~16100~~ ~~*13500*~~16100	~~280~~ ~~***51***~~**280**	~~***0***~~**1350**	300	O-ring	B
X-102E	I & C	~~19000~~ ~~*13500*~~19000	~~99~~ ~~***180***~~**99**	-1350	300	O-ring	B
X-102F	I & C	~~19000~~ ~~*13500*~~19000	~~273.5~~ ~~***180***~~**279.5**	-1350	300	O-ring	B
X-102G	I & C	13500	~~180~~ ~~***281***~~**180**	~~***-1350***~~ **-1175**	300	O-ring	B
X102-H	*I & C*	*13500*	180	-5250	*300*	*O-ring*	*B*
X102-J	*I & C*	*13500*	55	*1100*	*300*	*O-ring*	*B*
X-103A	I & C	~~16400~~ ~~*6500*~~ See Note 1	~~***45***~~ ~~***32***~~**340.5**	~~***-1350***~~**0**	~~300~~ **150**	O-ring	B
X-103B	I & C	~~**16400**~~ ~~***6500***~~ See Note 1	~~**180**~~ ~~***306***~~**211**	~~***50***~~**0**	~~300~~ **150**	O-ring	B
X-103C	I & C	~~**16400**~~ ~~***7630***~~ See Note 1	~~**180**~~ ~~***213***~~**134**	~~***-525***~~**0**	~~300~~ **150**	O-ring	B
X-103D	I & C	~~**16400**~~ ~~***7630***~~ See Note 1	~~**180**~~ ~~***138***~~**295**	~~***2650***~~**5600**	~~300~~ **150**	O-ring	B
X-103E	I & C	~~**16400**~~ ~~***7630***~~ See Note 1	~~**45**~~ ~~***150***~~**211**	~~***2700***~~**1350**	300	O-ring	B
X-104A	FMCRD Position Indicator	~~**19000**~~ ~~***20100***~~***19000***	81	0	300	O-ring	B
X-104B	FMCRD Position Indicator	~~**19000**~~ ~~***20100***~~***19000***	260.5	0	300	O-ring	B
X-104C	FMCRD Position Indicator	20100	99	~~***0***~~**1350**	~~300~~ **450**	O-ring	B

Table 6.2-8 Primary Containment Penetration List* (Continued)

Penetration Number	Name	Elevation (mm)	Azimuth (deg)	Offset (mm)	Diameter (mm)	Barrier Type	Testing†‡
X-104D	FMCRD Position Indicator	20100	279.5	~~0~~1350	~~300~~ 450	O-ring	B
X-104E	FMCRD Position Indicator	~~19000~~ ~~20100~~19000	~~99~~81	~~-0~~1350	300	O-ring	B
X-104F	FMCRD Position Indicator	~~19000~~ ~~20100~~19000	260.5	1350	~~300~~ 450	O-ring	B
X-104G	FMCRD Position Indicator	~~19000~~ ~~20100~~19000	~~81~~99	~~1350~~0	300	O-ring	B
X-104H	FMCRD Position Indicator	~~19000~~ ~~20100~~19000	279.5	0	~~300~~ 450	O-ring	B
X-105A	Neutron Detection	~~20100~~ ~~19000~~20100	81	~~-1350~~ ~~0~~1350	~~300~~ 450	O-ring	B
X-105B	Neutron Detection	~~20100~~ ~~19000~~20100	260.5	~~-1350~~ ~~1300~~1350	~~300~~ 450	O-ring	B
X-105C	Neutron Detection	~~20100~~ ~~19000~~20100	99	~~-5250~~ ~~0~~ -1350	~~300~~ 450	O-ring	B
X-105D	Neutron Detection	~~20100~~ ~~19000~~20100	279.5	~~-1350~~ ~~1300~~ -1350	~~300~~ 450	O-ring	B
~~X-105E~~	~~Neutron Detection~~	~~19000~~	~~81~~	~~-1300~~	~~450~~	~~O-ring~~	~~B~~
~~X-105F~~	~~Neutron Detection~~	~~19000~~	~~260.5~~	~~0~~	~~450~~	~~O-ring~~	~~B~~
~~X-105G~~	~~Neutron Detection~~	~~19000~~	~~99~~	~~1300~~	~~450~~	~~O-ring~~	~~B~~
~~X-105H~~	~~Neutron Detection~~	~~19000~~	~~279.5~~	~~0~~	~~450~~	~~O-ring~~	~~B~~
X-106A	**Div I Instrumentation**	~~13500~~16400	~~51~~45	~~1370~~1350	**300**	**O-ring**	**B**
X-106B	**Div II Instrumentation**	**13500**	**180**	~~1157~~125	**300**	**O-ring**	**B**
X-106C	**Div III Instrumentation**	~~13500~~16400	**180**	~~-1157~~ -6200	**300**	**O-ring**	**B**
X-106D	**Div IV Instrumentation**	~~13500~~16100	~~281~~280	~~-1370~~0	**300**	**O-ring**	**B**
X-106F	*Div NON Instrumentation*	*16400*	*180*	*2725*	*300*	*O-ring*	*B*
X-106G	*Div NON Instrumentation*	*16400*	*45*	*2700*	*300*	*O-ring*	*B*
X-106H	*Div NON Instrumentation*	*14700*	*55*	*1000*	*300*	*O-ring*	*B*
X-106J	*Div NON Instrumentation*	*20100*	*260.5*	*-1350*	*300*	*O-ring*	*B*

Table 6.2-8 Primary Containment Penetration List* (Continued)

Penetration Number	Name	Elevation (mm)	Azimuth (deg)	Offset (mm)	Diameter (mm)	Barrier Type	Testing†‡
X-107A	**Group B Instr**	~~13500~~16400	~~291~~180	~~-1370~~ -4950	**300**	**O-ring**	**B**
X-107B	**Power and Control**	**13500**	**180**	~~-4850~~ 1425	**450**	**O-ring**	**B**
X-110	~~FCS Suction~~ **Spare**	~~13500~~ 20100	~~55~~99	~~1000~~0	300	~~O-ring~~ **Welded Cap**	~~B~~ ~~C~~A
X-111	Spare	~~13500~~ ~~15000~~20100	~~280~~260.5	~~1350~~0	300	O-ring	B
X-112	Spare	~~13500~~ ~~19000~~20100	~~180~~ ~~81~~279.5	~~-5250~~0	300	O-ring	B
~~X-113~~	~~Spare~~	~~13500~~ ~~19000~~	~~180~~ ~~261~~	~~1350~~	~~300~~	~~O-ring~~	~~B~~
X-130A	*I & C*	*13500*	*45*	*0*	*300*	Valve ~~O-ring~~	~~B~~A
X-130B	*I & C*	*13500*	*212*	*0*	*300*	Valve ~~O-ring~~	~~B~~A
X-130C	*I & C*	*13500*	*124*	*0*	*300*	Valve ~~O-ring~~	~~B~~A
X-130D	*I & C*	*13500*	*295*	*0*	*300*	Valve ~~O-ring~~	~~B~~A
X-140A	*I & C*	~~1293~~~~13500~~	45	-2500 ~~-27000~~	*250*~~300~~	Valve ~~O-ring~~	~~B~~A
X-140B	*I & C*	*13500*	*300*	*0*	*300*	Valve ~~O-ring~~	~~B~~A
X-141A	*I & C*	*13500*	*63.5*	*0*	*300*	Valve ~~O-ring~~	~~B~~A

Table 6.2-8 Primary Containment Penetration List* (Continued)

Penetration Number	Name	Elevation (mm)	Azimuth (deg)	Offset (mm)	Diameter (mm)	Barrier Type	Testing†‡
~~X-141B~~ X-141B	~~I & C~~ I & C	~~13500~~ 13500	~~275~~ 275	~~0~~ 0	~~300~~ 300	~~O-ring~~ **Valve**	~~B~~A
X-142A	I & C	20100	38	0	90	**Valve** ~~**O-ring**~~	~~**B**~~A
X-142B	I & C	20100	244	0	90	**Valve** ~~**O-ring**~~	~~**B**~~A
X-142C	I & C	20100	116	0	90	**Valve** ~~**O-ring**~~	~~**B**~~A
X-142D	I & C	20100	296.5	2000	90	**Valve** ~~**O-ring**~~	~~**B**~~A
X-143A	I & C	14700	45	0	90	**Valve** ~~**O-ring**~~	~~**B**~~A
X-143B	I & C	14700	212	0	90	**Valve** ~~**O-ring**~~	~~**B**~~A
X-143C	I & C	14700	124	0	90	**Valve** ~~**O-ring**~~	~~**B**~~A
X-143D	I & C	14700	300	0	90	**Valve** ~~**O-ring**~~	~~**B**~~A
X-144A	I & C	**12700**~~**12650**~~	45	0	90	**Valve** ~~**O-ring**~~	~~**B**~~A
X-144B	I & C	**12700**~~**12650**~~	~~212~~	0	90	**Valve** ~~**O-ring**~~	~~**B**~~A
X-144C	I & C	**12700**~~**12650**~~	124	0	90	**Valve** ~~**O-ring**~~	~~**B**~~A
X-144D	I & C	**12700**~~**12650**~~	300	0	90	**Valve** ~~**O-ring**~~	~~**B**~~A
X-146A	I & C	19000	38	0	300	**Valve** ~~**O-ring**~~	~~**B**~~A
X-146B	I & C	19000	248	0	300	**Valve** ~~**O-ring**~~	~~**B**~~A
X-146C	I & C	19000	112	0	300	**Valve** ~~**O-ring**~~	~~**B**~~A
X-146D	I & C	19000	296.5	0	300	**Valve** ~~**O-ring**~~	~~**B**~~A
X-147	I & C	20100	248	0	90~~100~~	**Valve** ~~**O-ring**~~	~~**B**~~A
X-160	LDS Monitor	20100	**46**~~**42**~~	0	250	**Valve** ~~**O-ring**~~	~~**B**~~A
X-161A	CAMS I & C	~~**14700**~~ **20100**	~~**45**~~ 42.75	~~**1000**~~ 0	250	~~O-ring~~ **Welded Cap**	~~**B C**~~ A
X-161B	CAMS I & C	**14700 20100**	~~**290**~~ **292.5**	0	250	~~O-ring~~ **Welded Cap**	~~**B C**~~ A

Table 6.2-8 Primary Containment Penetration List* (Continued)

Penetration Number	Name	Elevation (mm)	Azimuth (deg)	Offset (mm)	Diameter (mm)	Barrier Type	Testing†‡
X-162A	~~CAMS I & C~~ **Sample/Return Drywell Gas**	19000	116	0	250	~~O-ring~~ **Valve**	~~B~~ A
X-162B	~~CAMS I & C~~ **Sample/Return Drywell Gas**	19000	244	0	250	~~O-ring~~ **Valve**	~~B~~ A
X-170	I & C	13400	310	0	200	**Valve** ~~*O-ring*~~	~~*B*~~A
~~X-171~~ **X-171**	~~I & C~~ **I & C**	~~14700~~ **16400**	~~55~~ **45**	~~-1000~~ **-2700**	~~300~~ **250**	~~O-ring~~ **Valve**	~~B~~**A**
X-177	*I & C*	*15900*	*135*	*-500*	*250*	***Valve*** ~~*O-ring*~~	~~*B*~~*A*
X-200B	*Wetwell Spray*	*8900*	*258*	*0*	*100*	*Valve*	*A*
X-200C	*Wetwell Spray*	*8900*	*102*	*0*	*100*	*Valve*	*A*
X-201	*RHR Pump Suction (A)*	***-7200*** ~~*-7085*~~	*36*	*0*	*450*	*Valve*	*A*
X-202	*RHR Pump Suction (B)*	***-7200*** ~~*-7085*~~	*216*	*0*	*450*		*A*
X-203	*RHR Pump Suction (C)*	***-7200*** ~~*-7085*~~	*144*	*0*	*450*	*Valve*	*A*
X-204	*RHR Pump Test (A)*	~~*1200*~~***800***	~~*86*~~ ~~*266*~~ ***85***	*0*	*250*	*Valve*	*A*
X-205	*RHR Pump Test (B)*	~~*1200*~~**800**	~~*266*~~ **265**	0	250	Valve	A
X-206	*RHR Pump Test (C)*	~~*1200*~~**800**	~~*94*~~ **95**	0	250	Valve	A
X-210	*HPCF Pump Suction (B)*	-7085	252	0	400	Valve	A
X-211	*HPCF Pump Suction (C)*	-7085	108	0	400	Valve	A
X-213	RCIC Turbine Exhaust	~~5800~~ **5848**	60	0	550	Valve	~~A~~C
X-214	*RCIC Pump Suction*	-7050	72	*0*	*200*	*Valve*	*A*
~~X-215~~	~~RCIC Vacuum Pump~~	~~2000~~	~~70~~	~~0~~	~~250~~		~~A~~
X-216	*SPCU Pump Suction*	-7450	*283*	*0*	*200*	*Valve*	A
X-217	*SPCU Return*	1700	*340*	*0*	*250*	*Valve*	A
~~X-220~~	~~MSIV Leak-off~~	~~9200~~	~~45~~	~~-2000~~	~~250~~		~~B~~
X-240	Wetwell Purge Suction	9200	45	1200	~~550~~ ~~500~~**550**	Valve	~~A~~**C**

Table 6.2-8 Primary Containment Penetration List* (Continued)

Penetration Number	Name	Elevation (mm)	Azimuth (deg)	Offset (mm)	Diameter (mm)	Barrier Type	Testing†‡
X-241	Wetwell Purge Exhaust	9200	~~230~~221	0	~~550~~ ~~500~~550	Valve	~~A~~C
X-242	~~FCS Return~~ **Spare**	1500	225	-1000	150	**Welded Cap**	~~AC~~A
X-250	~~Spare~~ **Breathing Air**	~~8500~~ ~~20100~~19000	~~45~~ ~~60~~ 296.5	~~0~~3000	~~400~~ ~~40~~ 200	Valve	~~A~~C
~~X-251~~	~~Spare~~	~~9000~~	~~213~~	~~0~~	~~400~~		~~A~~
X-252	~~FCS Return~~ **Spare**	1500	50	0	300	Welded Cap	~~B~~ ~~C~~A
~~X-253~~	~~Spare~~	~~2650~~	~~135~~	~~1000~~	~~300~~		~~B~~
X-254	*Spare*	*2650*	*225*	*-1000*	*300*	***Welded Cap***	~~B~~A
~~X-255~~	~~Spare~~	~~1200~~	~~282~~	~~0~~	~~300~~		~~B~~
~~X-300A~~	~~I & C~~	~~7300~~	~~134~~	~~0~~	~~300~~	~~O-ring~~	~~B~~
~~X-300B~~	~~I & C~~	~~7300~~	~~211~~	~~0~~	~~300~~	~~O-ring~~	~~B~~
~~X-320~~ **X-320**	~~I & C~~ **I & C**	~~8900~~8900	~~74~~74	~~0~~0	~~90~~90	~~O-ring~~ **Valve**	~~B~~A
X-321A	I & C	~~2050~~	~~97.5~~112	0	300	~~O-ring~~ **Valve**	~~B~~ **A**
X-321B	I & C	~~6000~~2200	~~262.5~~248	0	300	~~O-ring~~ **Valve**	~~B~~ **A**
X-322A	I & C	400	78	0	90	~~O-ring~~ **Valve**	~~B~~ **A**
X-322B	I & C	400	258	0	90	~~O-ring~~ **Valve**	~~B~~ **A**
X-322C	I & C	400	102	0	90	~~O-ring~~ **Valve**	~~B~~ **A**
X-322D	I & C	400	282	0	90	~~O-ring~~ **Valve**	~~B~~ **A**
X-322E	I & C	~~2000~~ See Note 1	~~94~~106	0	90	~~O-ring~~ **Valve**	~~B~~ **A**
X-322F	I & C	~~2000~~ See Note 1	~~266~~282	0	90	~~O-ring~~ **Valve**	~~B~~ **A**
X-323A	I & C	-5200	30	0	90	**Valve** ~~O-ring~~	~~B~~A
X-323B	I & C	-5200	210	0	90	**Valve** ~~O-ring~~	~~B~~A
X-323C	I & C	~~-5200~~ -5500	~~156~~138	0	90	**Valve** ~~O-ring~~	~~B~~A

Table 6.2-8 Primary Containment Penetration List* (Continued)

Penetration Number	Name	Elevation (mm)	Azimuth (deg)	Offset (mm)	Diameter (mm)	Barrier Type	Testing†‡
X-323D	I & C	-5200	304	0	90	**Valve** ~~**O ring**~~	~~**B**~~**A**
X-323E	I & C	-7500	100	0	90	**Valve** ~~**O ring**~~	~~**B**~~**A**
X-323F	I & C	-7500	230	0	90	**Valve** ~~**O ring**~~	~~**B**~~**A**
X-331A	CAMS Gamma Det.	~~**7300**~~**9700**	~~**30**~~**76.5**	0	250	~~O ring~~ **Welded Cap**	~~B~~ ~~**C**~~**A**
X-331B	CAMS Gamma Det.	~~**7300**~~**9700**	~~**207**~~**231**	0	250	~~O ring~~ **Welded Cap**	~~B~~ ~~**C**~~**A**
X-332A	CAMS Sampling Ret.	~~**8900**~~**9700**	~~**94**~~**97**	0	300	~~O ring~~ **Valve**	~~B~~ **A**
X-332B	CAMS Sampling Ret.	~~**8900**~~**9700**	~~**266**~~**261**	0	300	~~O ring~~ **Valve**	~~B~~ **A**
X-342	I & C	9500	266	0	90	**Valve** ~~**O ring**~~	~~**B**~~**A**
X-600A	TIP Drive	~~**1580**~~**1693**	0	~~**-450**~~**-700**	~~50~~ **40**	Valve	A
X-600B	TIP Drive	~~**1580**~~**1693**	0	**0**	~~50~~ **40**	Valve	A
X-600C	TIP Drive	~~**1580**~~**1693**	0	~~**450**~~**700**	~~50~~ **40**	Valve	A
~~X-600D~~ **X-600D**	~~TIP Drive Purge~~ **TIP Drive Purge**	~~**1580**~~**1693**	~~0~~	~~**730**~~**420**	~~50~~ **40**	Valve	~~A~~**A**
X-700A	RIP Purge Water Supply	~~**-590**~~**265**	180	~~**-1780**~~ **-1750**	~~35~~ ~~**25**~~ **15**	Valve	A
X-700B	RIP Purge Water Supply	~~**-590**~~**-265**	180	~~**-1640**~~ **-1610**	~~35~~ ~~**25**~~ **15**	Valve	A
X-700C	RIP Purge Water Supply	~~**-590**~~**-515**	180	~~**-1500**~~ **-1750**	~~35~~ ~~**25**~~ **15**	Valve	A
X-700D	RIP Purge Water Supply	~~**-760**~~**515**	180	~~**-1780**~~ **-1610**	~~35~~ ~~**25**~~ **15**	Valve	A
X-700E	RIP Purge Water Supply	~~**-760**~~**-765**	180	~~**-1640**~~ **-1610**	~~35~~ ~~**25**~~ **15**	Valve	A
X-700F	RIP Purge Water Supply	~~**-760**~~**-265**	180	~~**-1500**~~ **-1470**	~~35~~ ~~**25**~~ **15**	Valve	A
X-700G	RIP Purge Water Supply	~~**-930**~~**-15**	180	~~**-1780**~~ **-1330**	~~35~~ ~~**25**~~ **15**	Valve	A
X-700H	RIP Purge Water Supply	~~**-930**~~**-15**	180	~~**-1640**~~ **-1470**	~~35~~ ~~**25**~~ **15**	Valve	A
X-700J	RIP Purge Water Supply	~~**-1100**~~**-15**	180	~~**-1780**~~ **-1610**	~~35~~ ~~**25**~~ **15**	Valve	A

Table 6.2-8 Primary Containment Penetration List* (Continued)

Penetration Number	Name	Elevation (mm)	Azimuth (deg)	Offset (mm)	Diameter (mm)	Barrier Type	Testing†‡
X-700K	RIP Purge Water Supply	~~-1100~~ -15	180	~~-1640~~ -1750	~~35~~ ~~25~~ 15	Valve	A
X-710	CRD Insertion (Total ~~103~~102	~~1210~~1285	180	~~1780~~ 1680	~~60~~32	Valve	A
X-740	Spare	~~250~~85	180	~~1840~~ 1750	100	Welded Cap	~~A~~ ~~C~~A
X-750A	I&C (Core Diff Press.)	~~-250~~ ~~-900~~ 1135	180	~~-1780~~ -910	~~40~~20	~~O ring~~ Valve	~~B~~A
X-750B	I&C (Core Diff Press.)	~~250~~985	180	~~1640~~ 1330	~~40~~20	~~O ring~~ Valve	~~B~~A
X-750C	I&C (Core Diff Press.)	~~250~~1285	180	~~1640~~ -910	~~40~~20	~~O ring~~ Valve	~~B~~A
X-750D	I&C (Core Diff Press.)	~~250~~985	180	~~1780~~ 1470	~~40~~20	~~O ring~~ Valve	~~B~~A
X-751A	I&C (RIP Diff Press.)	~~420~~985	180	~~1780~~ -1470	~~40~~20	~~O ring~~ Valve	~~B~~A
X-751B	I&C (RIP Diff Press.)	~~420~~1285	180	~~1640~~ 910	~~40~~20	~~O ring~~ Valve	~~B~~A
X-751C	I&C (RIP Diff Press.)	~~420~~985	180	~~1640~~ -1330	~~40~~20	~~O ring~~ Valve	~~B~~A
X-751D	I&C (RIP Diff Press.)	~~420~~1135	180	~~1780~~ 910	~~40~~20	~~O ring~~ Valve	~~B~~A
X-780A	Spare	~~-250~~235	180	~~-1500~~ -1190	~~40~~20	Welded Cap	~~B~~ ~~C~~A
X-780B	Spare	~~-590~~235	180	~~1640~~ 1190	~~40~~20	Welded Cap	~~B~~ ~~C~~A
X-610	CRD Insertion (Total ~~102~~103)	~~1210~~1285	0	~~1780~~ 1680	~~60~~32	Valve	A
X-620	Low Conductivity Drain	~~-590~~ ~~-650~~ -700	0	~~-1920~~ 1750	~~75~~ ~~65~~65		A
X-621	High Conductivity Drain	~~-590~~ ~~-650~~ -450	0	~~-1920~~ 1750	~~150~~ ~~65~~150		A
X-650A	I&C (Core Diff Press.)	~~250~~985	0	~~1640~~ 1330	~~40~~20	~~O ring~~ Valve	~~B~~A
X-650B	I&C (Core Diff Press.)	~~250~~1285	0	~~-1710~~ -910	~~40~~20	~~O ring~~ Valve	~~B~~A
X-650C	I&C (Core Diff Press.)	~~-250~~985	0	~~1780~~ 1470	~~40~~20	~~O ring~~ Valve	~~B~~A
X-650D	I&C (Core Diff Press.)	~~-250~~1135	0	~~-1570~~ -910	~~40~~20	~~O ring~~ Valve	~~B~~A
X-651A	I&C (RIP Diff Press.)	~~-420~~1285	0	~~1640~~ 910	~~40~~20	~~O ring~~ Valve	~~B~~A

Table 6.2-8 Primary Containment Penetration List* (Continued)

Penetration Number	Name	Elevation (mm)	Azimuth (deg)	Offset (mm)	Diameter (mm)	Barrier Type	Testing†‡
X-651B	I&C (RIP Diff Press.)	~~-420~~985	0	~~-1710~~ -1330	~~40~~20	~~O-ring~~ Valve	~~B~~A
X-651C	I&C (RIP Diff Press.)	~~-420~~1135	0	~~1780~~ 910	~~40~~20	~~O-ring~~ Valve	~~B~~A
X-651D	I&C (RIP Diff Press.)	~~-420~~985	0	~~1570~~ -1470	~~40~~20	~~O-ring~~ Valve	~~B~~A
X-680A	Spare	~~-250~~85	0	~~1500~~ -1750	~~40~~20	Welded Cap	~~B~~A
X-680B	Spare	~~-250~~ ~~-590~~85	0	~~-1430~~ 1750	~~40~~20		B

Note 1: Penetration will be located such that bottom of penetration sleeve is above revised pool swell impact zone (7700 mm).

Table 6.2-9 Secondary Containment Penetration List* (Continued)

Penetration Number	Name	Elevation (mm)	Diameter (mm)
50	HNCW	12300	~~200~~ 250
51	HNCW	12300	~~200~~ 250
60	BAS	-1700	80
61	BAS	-1700	80

Table 6.2-10 Potential Bypass Leakage Paths

Penetration Number	Name	Diameter (mm)	Termination Region	Leakage Barriers	Potential Bypass Path
X-5	*L/D Personnel Hatch*	*2400/~~5000~~* **4300**	*S*	*C/M-J*	*No*
X-6	*L/D Equipment Hatch*	*2400/~~5000~~* **4300**	*S*	*C/M-J*	*No*
X-32~~B~~ **A**	*LPFL (B) RHR (B)*	*650*	*S*	*E/C/L*	*No*
X-32~~C~~ **B**	*LPFL (C) RHR (C)*	*650*	*S*	*E/C/L*	*No*
X-69	SA	90	E	**E/D/~~H~~**	No
~~X-80~~	*~~Drywell Purge Suction~~*	*~~550~~~~500~~*	*~~E~~*	*~~E/C/J~~*	*~~Yes~~*
~~X-81~~	*~~Drywell Purge Exhaust~~*	*~~550~~~~500~~*	*~~E~~*	*~~E/C/J~~*	*~~Yes~~*
X-82	~~FCS Suction~~ **Spare**	**150**	**S**	**E/C/J**	**No**
X-91	Spare	~~400~~ **300**	P	B/A	No
X-92	Spare	~~400~~ **300**	P	B/A	No
X-94	*Spare*	*400*	*S*	*B/A*	*No*
X-95	*Spare*	*400*	*S*	*B/A*	*No*
X-100C	IP Power	~~450~~ **300**	S	C/J	No
X-100F	*RIP Power*	*450*	*S*	*C/J*	*No*
X-101A	LP Power	~~300~~ **450**	S	C/J	No
X-101B	LP Power	~~300~~ **450**	S	C/J	No
X-101J	*LP Power*	*300*	*S*	*C/J*	*No*
X-101K	*LP Power*	*300*	*S*	*C/J*	*No*
X-102B	I & C	~~300~~ **450**	S	C/J	No
X-102H	*I & C*	*300*	*S*	*C/J*	*No*
X-102J	*I & C*	*300*	*S*	*C/J*	*No*
X-103A	I & C	~~300~~ **150**	S	C/J	No
X-103B	I & C	~~300~~ **150**	S	C/J	No
X-103C	I & C	~~300~~ **150**	S	C/J	No
X-103D	**I & C**	**150**	S	C/J	No
X-103E	*I & C*	*300*	*S*	*C/J*	*No*
X-104C	FMCRD Pos. Indicator	~~300~~ **450**	S	C/J	No
X-104D	FMCRD Pos. Indicator	~~300~~ **450**	S	C/J	No
X-104F	FMCRD Pos. Indicator	~~300~~ **450**	S	C/J	No
X-104H	FMCRD Pos. Indicator	~~300~~ **450**	S	C/J	No
X-105A	Neutron Detection	~~300~~ **450**	S	C/J	No
X-105B	Neutron Detection	~~300~~ **450**	S	C/J	No
X-105C	Neutron Indicator	~~300~~ **450**	S	C/J	No
X-105D	Neutron Indicator	~~300~~ **450**	S	C/J	No

Table 6.2-10 Potential Bypass Leakage Paths

Penetration Number	Name	Diameter (mm)	Termination Region	Leakage Barriers	Potential Bypass Path
~~X-105E~~	~~Neutron Indicator~~	~~450~~	~~S~~	~~C/J~~	~~No~~
~~X-105F~~	~~Neutron Indicator~~	~~450~~	~~S~~	~~C/J~~	~~No~~
~~X-105G~~	~~Neutron Indicator~~	~~450~~	~~S~~	~~C/J~~	~~No~~
~~X-105H~~	~~Neutron Indicator~~	~~450~~	~~S~~	~~C/J~~	~~No~~
X-106A	Div I Instrumentation	300	S	C/J	No
X-106B	Div II Instrumentation	300	S	C/J	No
X-106C	Div III Instrumentation	300	S	C/J	No
X-106D	Div IV Instrumentation	300	S	C/J	No
X-106F	Div IV Instrumentation	300	S	C/J	No
X-106G	Div IV Instrumentation	300	S	C/J	No
X-106H	Div IV Instrumentation	300	S	C/J	No
X-106J	Div IV Instrumentation	300	S	C/J	No
X-107A	Group B Instr	300	S	C/J	No
X-107B	Power and Control	300	S	C/J	No
X-110	~~FCS Suction~~ **Spare**	~~150~~**300**	S	**E/C/J**	**No**
~~X-113~~	~~Spare~~	~~300~~	~~P~~	~~B/A~~	~~No~~
X-140A	I & C	~~300~~250	S	C/J	No
X-162A	~~CAMS I&C~~**Sample/Return Drywell Gas**	250	S	C/J	No
	~~CAMS I&C~~**Sample/Return Drywell Gas**	250	S	C/J	No
~~X-141B~~**X-141B**	~~I & C~~**I & C**	~~300~~**300**	~~S~~**S**	~~C/J~~**C/J**	~~No~~**No**
X-~~172~~**177**	I & C	250	S	C/J	No
~~X-171~~**X-171**	~~I&C~~**I & C**	~~300~~**250**	~~S~~**S**	~~C/J~~**C/J**	~~No~~**No**
X-200~~A~~**B**	Wetwell Spray	100	S	C/H	No
X-200~~B~~**C**	Wetwell Spray	100	S	C/H	No
~~X-220~~	~~MSIV Leakage~~	~~250~~	~~S~~	~~C/G~~	~~No~~
~~X-215~~	~~RCIC Vacuum Pump Ex.~~	~~250~~	~~S~~	~~C/G~~	~~No~~
X-240	Wetwell Purge Suction	~~550~~ ~~500~~550	E	E/C/J	Yes
X-241	Wetwell Purge Exhaust	~~550~~ ~~500~~550	E	E/C/J	Yes
X-242	~~FCS Suction~~ **Spare**	**150**	**S**	**E/C/J**	**No**
X-250	~~Spare~~Breathing Air	200	~~P~~E	~~B/A~~E/D	No
~~X-251~~	~~Spare~~		~~P~~	~~B/A~~	~~No~~

Table 6.2-10 Potential Bypass Leakage Paths (Continued)

Penetration Number	Name	Diameter (mm)	Termination Region	Leakage Barriers	Potential Bypass Path
X-252	~~FCS Suction~~ **Spare**	~~150~~**300**	***S***	**E/C/J**	**No**
~~X-253~~	~~Spare~~	~~300~~	~~S~~	~~B/A~~	~~No~~
~~X-254~~**X-254**	~~Spare~~**Spare**	~~300~~**300**	~~S~~**S**	~~B/A~~**B/A**	~~No~~**No**
~~X-255~~	~~Spare~~	~~300~~	~~S~~	~~B/A~~	~~No~~
~~X-300A~~	~~I&C~~	~~300~~	~~S~~	~~C/J~~	~~No~~
~~X-300B~~	~~I&C~~	~~300~~	~~S~~	~~C/J~~	~~No~~
~~X-320~~**X-320**	~~I&C~~**I&C**	~~90~~**90**	~~S~~**S**	~~C/J~~**C/J**	~~No~~**No**
~~*X-334*~~	~~*I&C*~~	~~*90*~~	~~*S*~~	~~*C/J*~~	~~*No*~~
~~*X-341*~~	~~*I&C*~~	~~*90*~~	~~*S*~~	~~*C/J*~~	~~*No*~~
X-610	*CRD Insertion (Total ~~102~~103)*	~~60~~**32**	*S*	*C/J*	*No*
X-620	*LCW Drain*	~~75~~**65**	*S*	*C/J*	*No*
X-621	*HCW Drain*	~~150~~**150**	*S*	*C/J*	*No*
X-650A	*I&C Core Diff Press.*	~~40~~**20**	*S*	*C/J*	*No*
X-650B	*I&C Core Diff Press.*	~~40~~**20**	*S*	*C/J*	*No*
X-650C	*I&C Core Diff Press.*	~~40~~**20**	*S*	*C/J*	*No*
X-650D	*I&C Core Diff Press.*	~~40~~**20**	*S*	*C/J*	*No*
X-651A	*I&C RIP Diff Press.*	~~40~~**20**	*S*	*C/J*	*No*
X-651B	*I&C RIP Diff Press.*	~~40~~**20**	*S*	*C/J*	*No*
X-651C	*I&C RIP Diff Press.*	~~40~~**20**	*S*	*C/J*	*No*
X-651D	*I&C RIP Diff Press.*	~~40~~**20**	*S*	*C/J*	*No*
X-~~660A~~600A	*TIP Drive*	~~50~~**40**	*S*	*C/J*	*No*
X-~~660B~~600B	*TIP Drive*	~~50~~**40**	*S*	*C/J*	*No*
X-~~660C~~600C	*TIP Drive*	~~50~~**40**	*S*	*C/J*	*No*
X-~~660D~~600D	*TIP Drive Purge*	~~50~~**40**	*S*	*C/J*	*No*
~~X-660D~~	~~TIP Drive Purge~~	~~50~~	~~S~~	~~C/K~~	~~No~~
X-680A	Spare	~~40~~**20**	S	C/K	No
X-680B	Spare	~~40~~**20**	S	C/K	No
X-700A	RIP Purge Water Supply	~~35~~ ~~25~~**15**	*S*	C/H	No
X-700B	RIP Purge Water Supply	~~35~~ ~~25~~**15**	S	C/H	No
X-700C	RIP Purge Water Supply	~~35~~ ~~25~~**15**	S	C/H	No

Table 6.2-10 Potential Bypass Leakage Paths (Continued)

Penetration Number	Name	Diameter (mm)	Termination Region	Leakage Barriers	Potential Bypass Path
X-700D	RIP Purge Water Supply	~~35~~ ~~25~~15	S	C/H	No
X-700E	RIP Purge Water Supply	~~35~~ ~~25~~15	S	C/H	No
X-700F	RIP Purge Water Supply	~~35~~ ~~25~~15	S	C/H	No
X-700G	RIP Purge Water Supply	~~35~~ ~~25~~15	S	C/H	No
X-700H	RIP Purge Water Supply	~~35~~ ~~25~~15	S	C/H	No
X-700J	RIP Purge Water Supply	~~35~~ ~~25~~15	S	C/H	No
X-700K	RIP Purge Water Supply	~~35~~ ~~25~~15	S	C/H	No
X-710	*CRD Insertion (Total 102)*	32	*S*	*C/L*	*No*
X-740	*Spare*	100	*S*	*B/A*	*No*
X-750A	*I&C (Core Diff Press.)*	~~180~~20	*S*	*C/J*	*No*
X-750B	*I&C (Core Diff Press.)*	~~180~~20	*S*	*C/J*	*No*
X-750C	*I&C (Core Diff Press.)*	~~180~~20	*S*	*C/J*	*No*
X-750D	*I&C (Core Diff Press.)*	~~180~~20	*S*	*C/J*	*No*
X-751A	*I&C (RIP Diff Press.)*	~~180~~20	*S*	*C/J*	*No*
X-751B	*I&C (RIP Diff Press.)*	~~180~~20	*S*	*C/J*	*No*
X-751C	*I&C (RIP Diff Press.)*	~~180~~20	*S*	*C/J*	*No*
X-751D	*I&C (RIP Diff Press.)*	~~180~~20	*S*	*C/J*	*No*
X-780A	*Spare*	~~180~~20	*S*	*B/A*	*No*
X-780B	*Spare*	~~180~~20	*S*	*B/A*	*No*

Figure 6.2-2 ~~Feedwater Line Break – RPV SideBreak Area~~Not Used

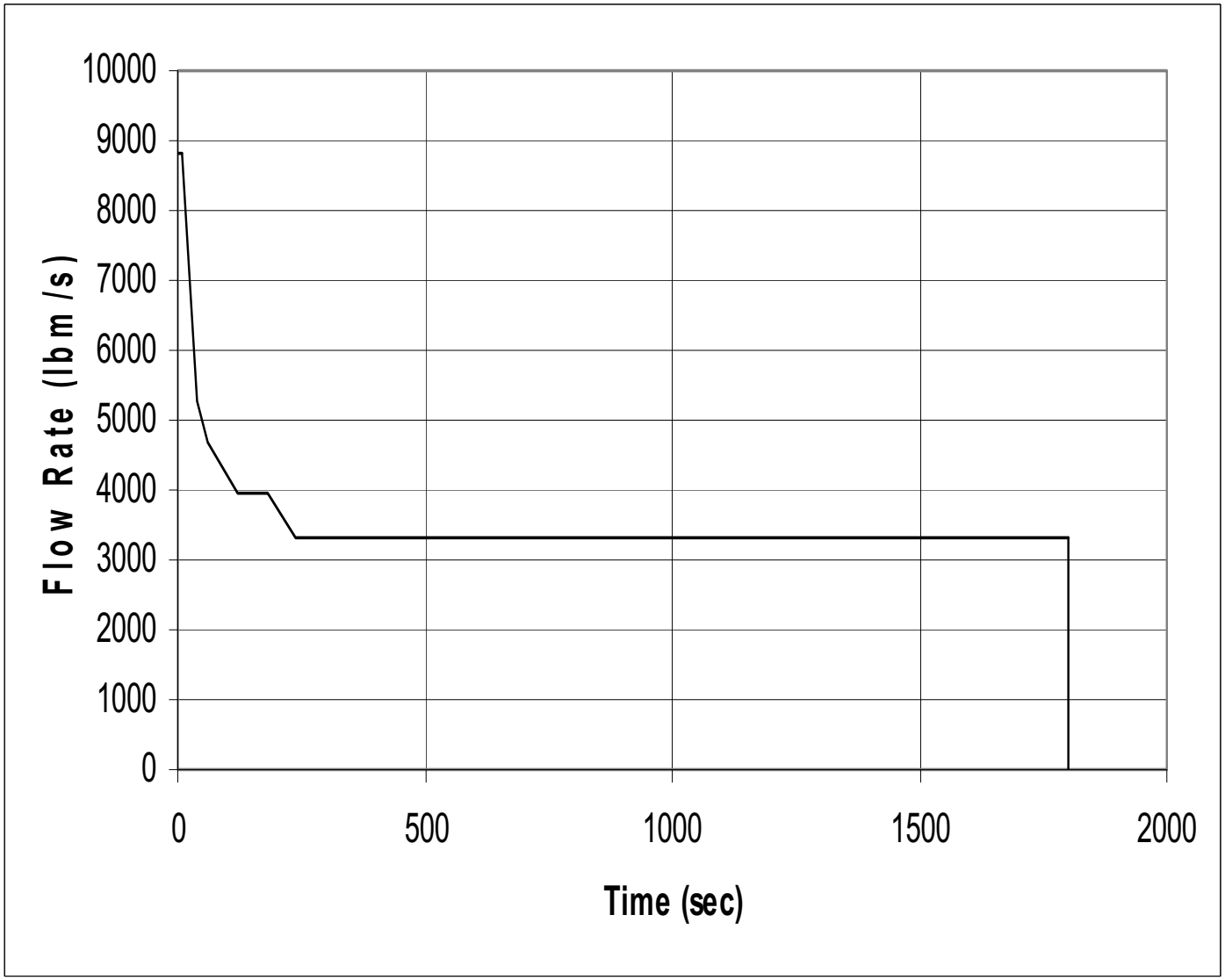

Figure 6.2-3 Feedwater Line Break Flow—Feedwater System Side of Break

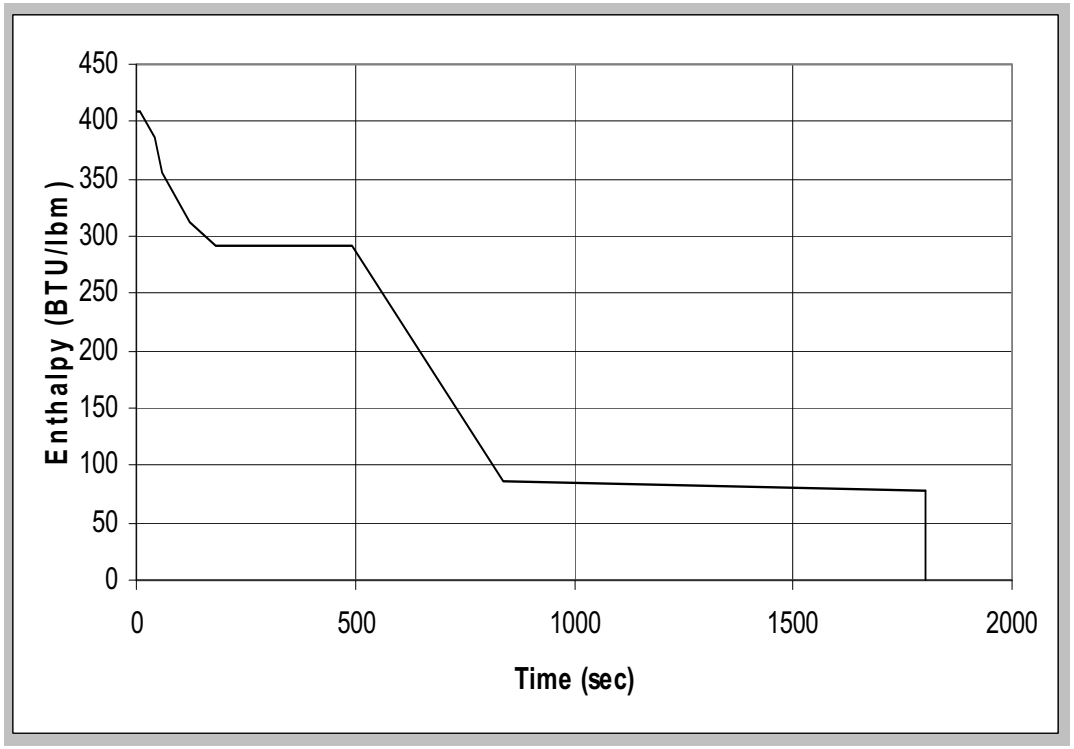

Figure 6.2-4 Feedwater Line Break Flow Enthalpy—Feedwater System Side of Break

Figure 6.2-5 ~~*Lower Drywell Air Transfer Percentage for Model Assumption Versus Actual Case*~~Not Used

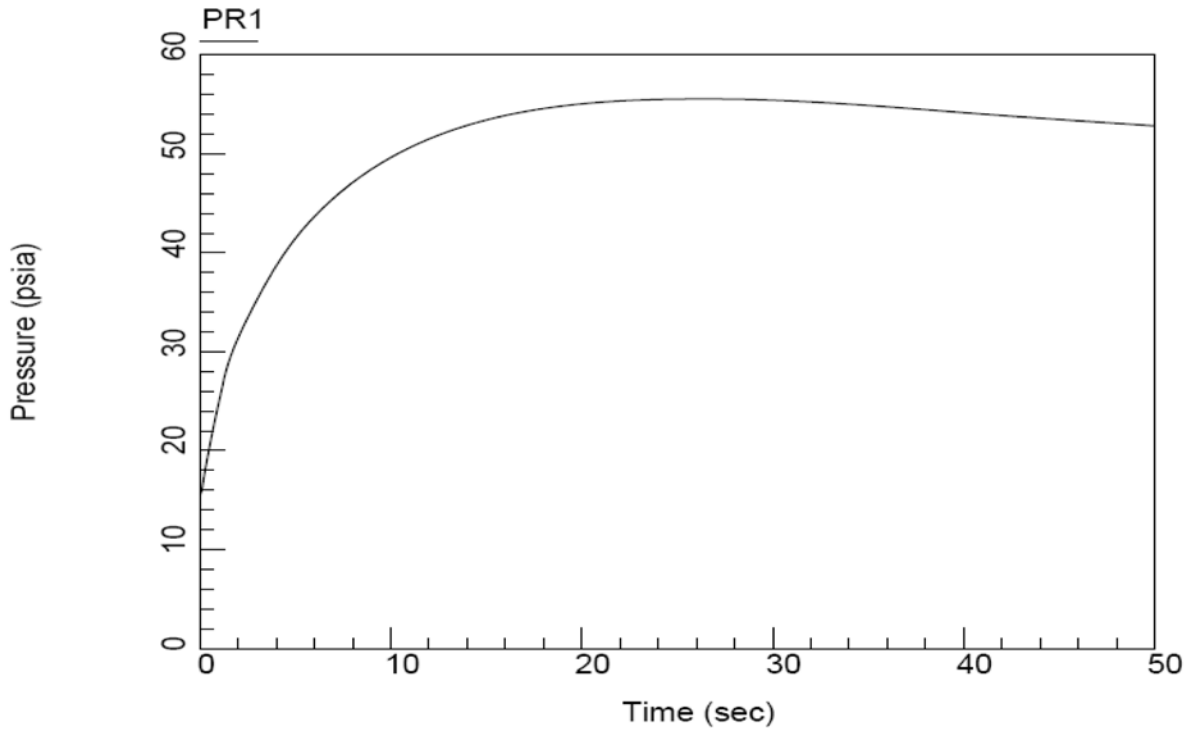

Figure 6.2-6a Drywell Pressure Response for Feedwater Line Break

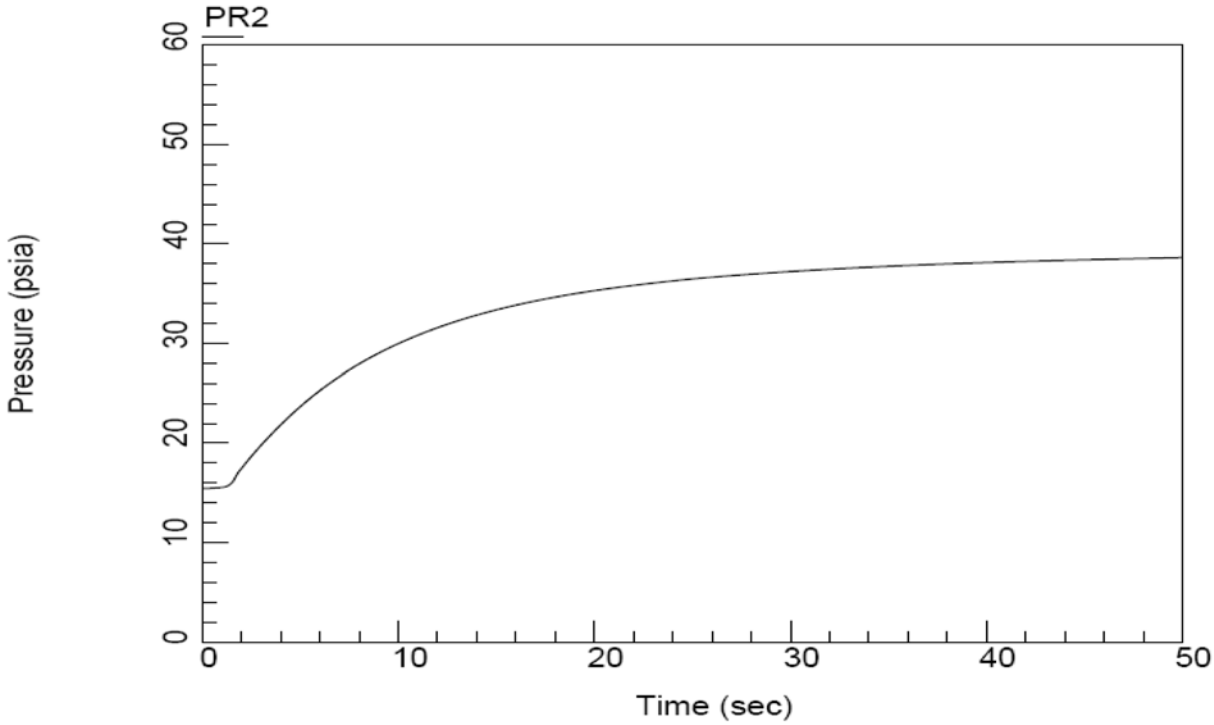

Figure 6.2-6b Wetwell Pressure Response for Feedwater Line Break

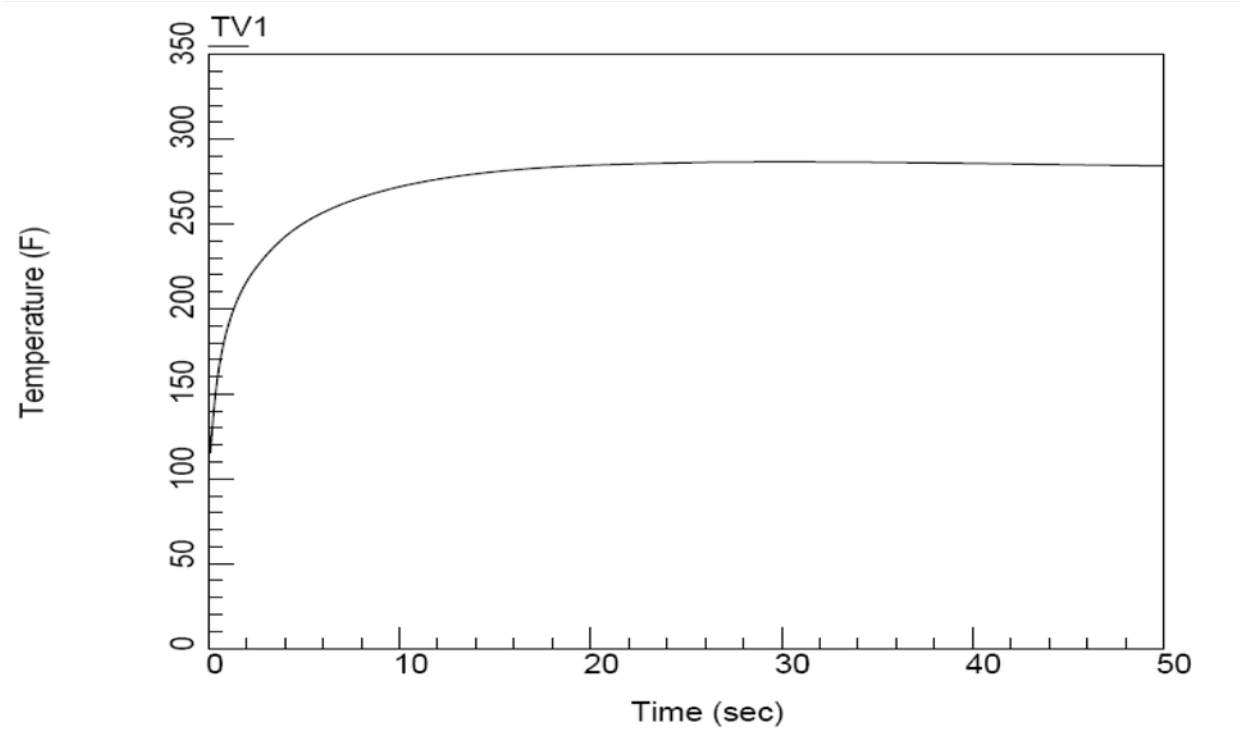

Figure 6.2-7a Temperature Response of Drywell for Feedwater Line Break

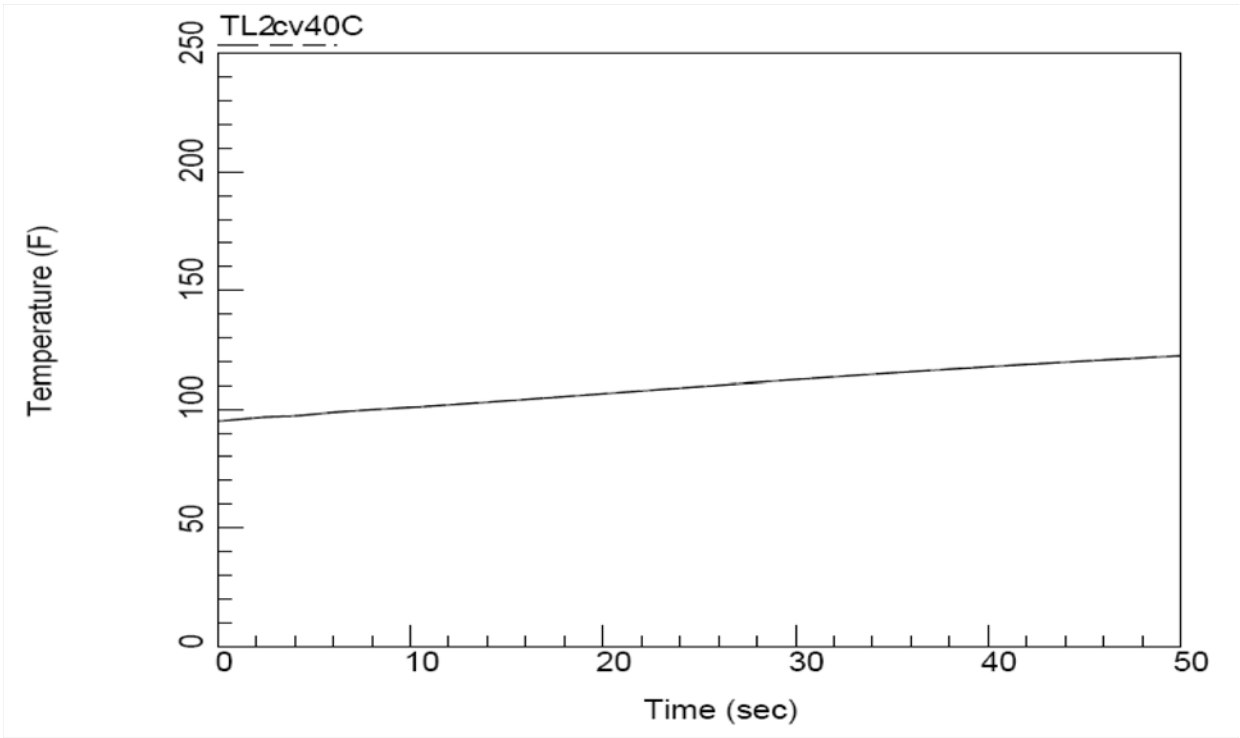

Figure 6.2-7b Temperature Response of Wetwell for Feedwater Line Break

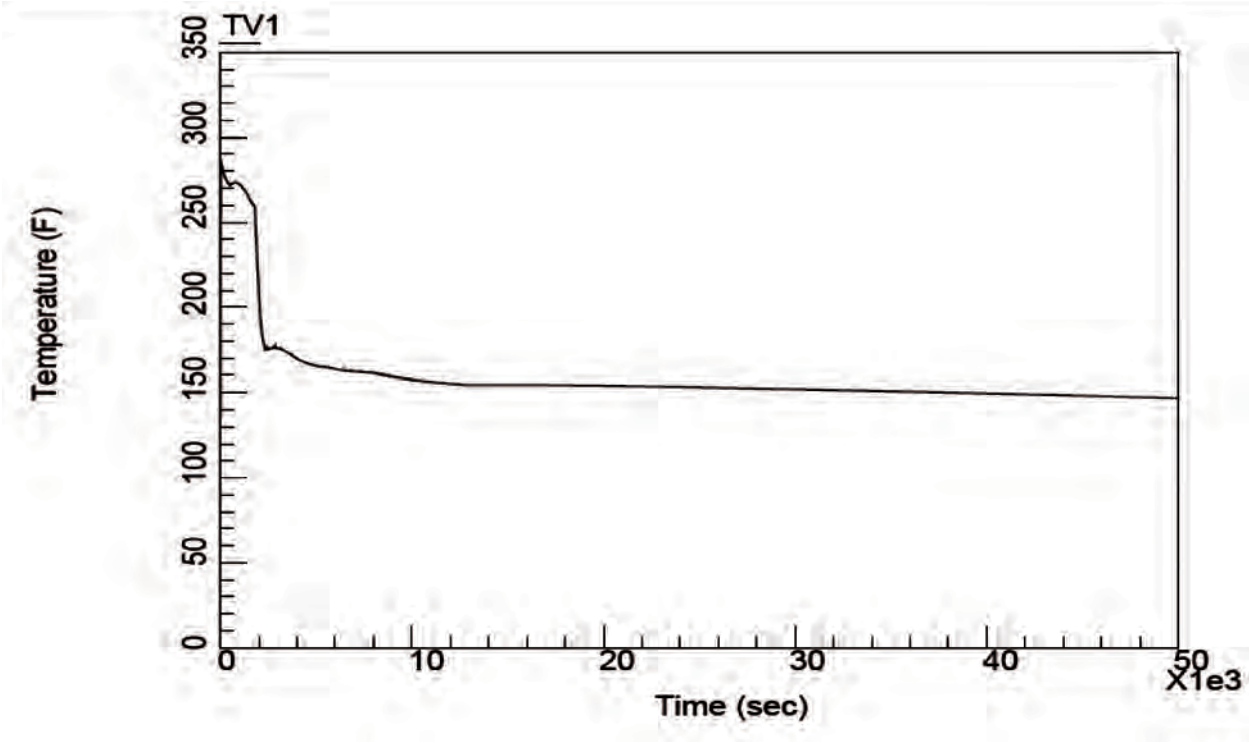

Figure 6.2-8a Drywell Temperature Time History After a Feedwater Line Break

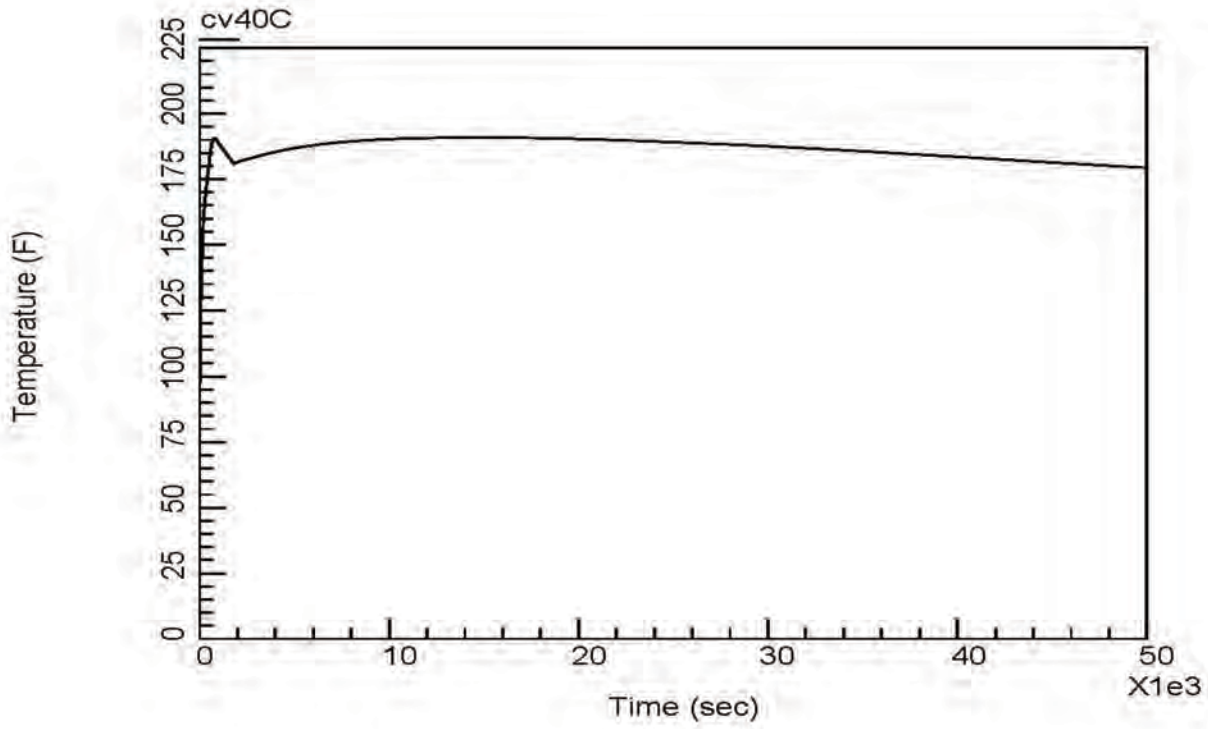

Figure 6.2-8b Suppression Pool Temperature Time History After a Feedwater Line Break

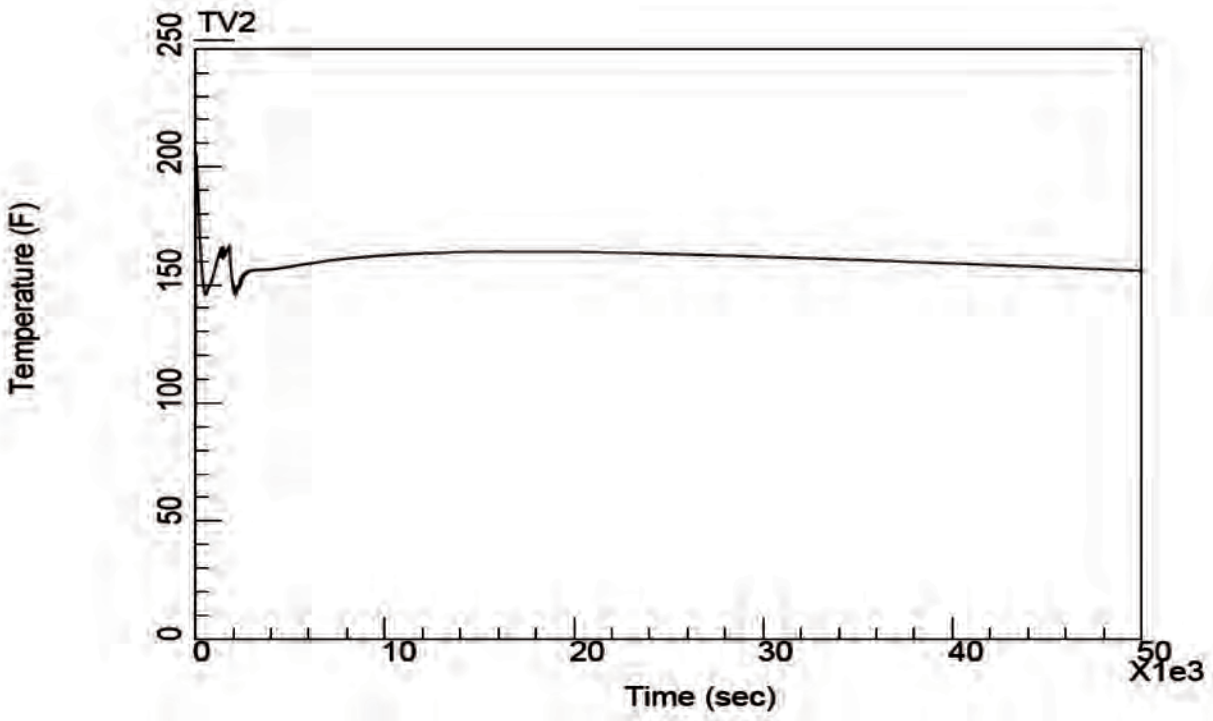

Figure 6.2-8c Wetwell Temperature Time History After a Feedwater Line Break

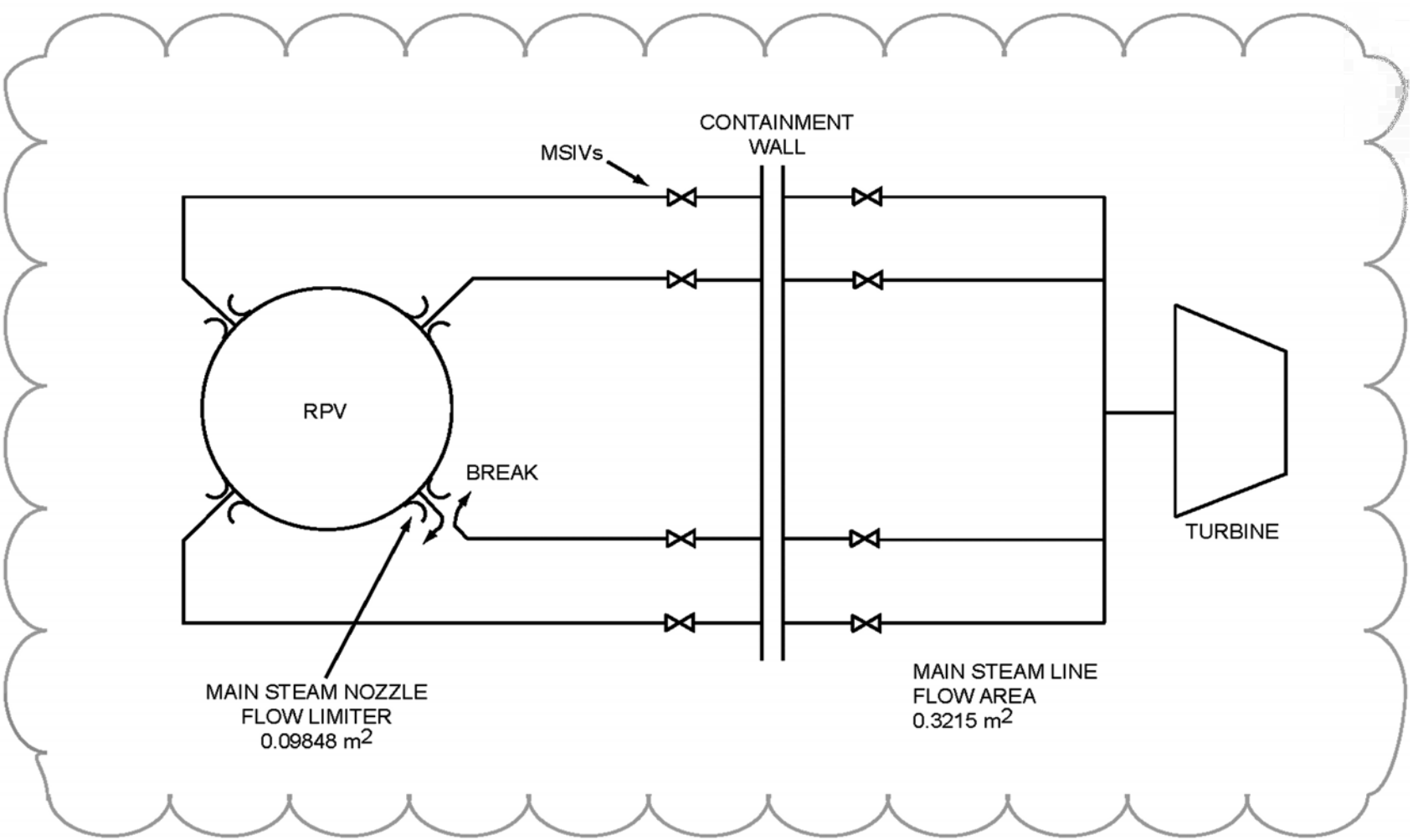

Figure 6.2-9 ABWR Main Steamlines with a Break

Figure 6.2-10 ~~*MSLB Area as a Function of Time*~~Not Used

Figure 6.2-11 ~~*Feedwater Specific Enthalpy as a Function of Integrated Feedwater Flow Mass*~~Not Used

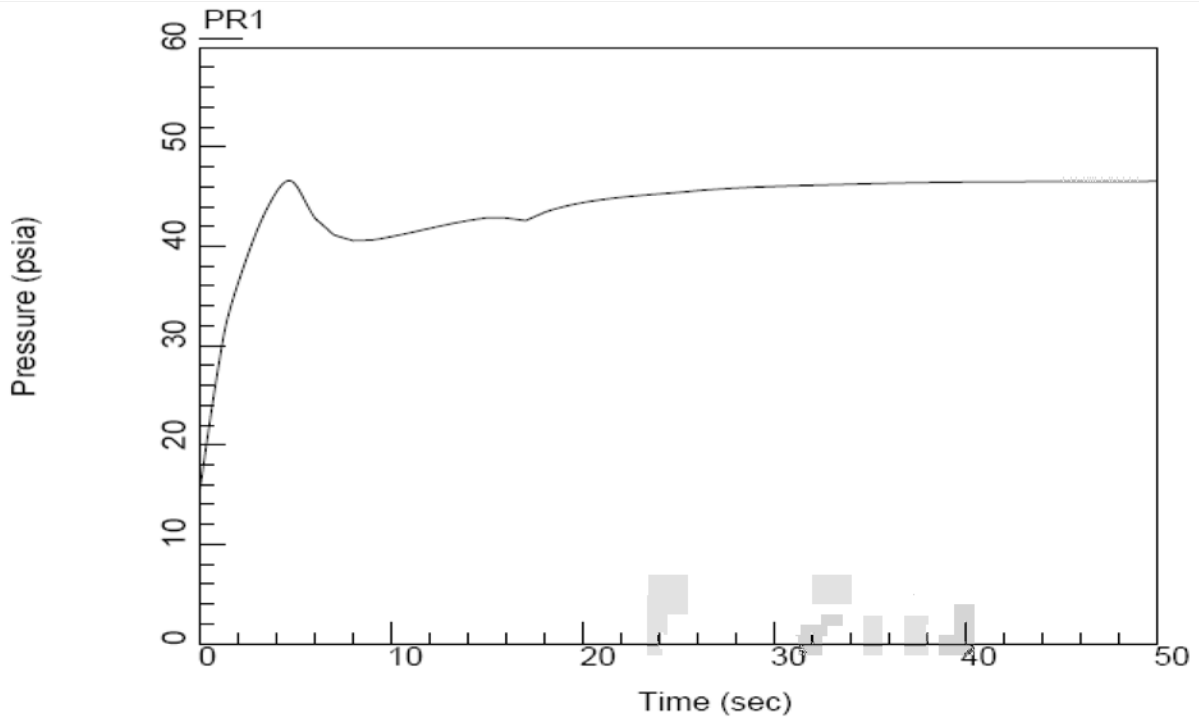

Figure 6.2-12a Drywell Pressure Time History for MSLB

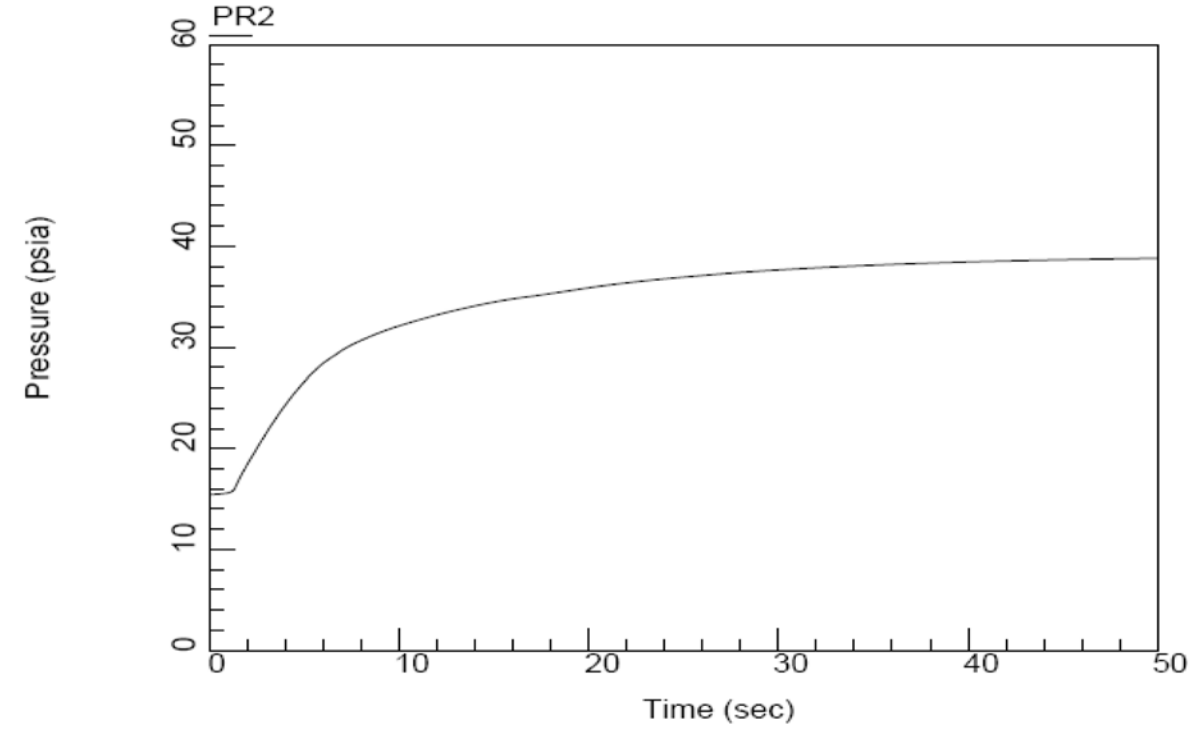

Figure 6.2-12b Wetwell Pressure Time History for MSLB

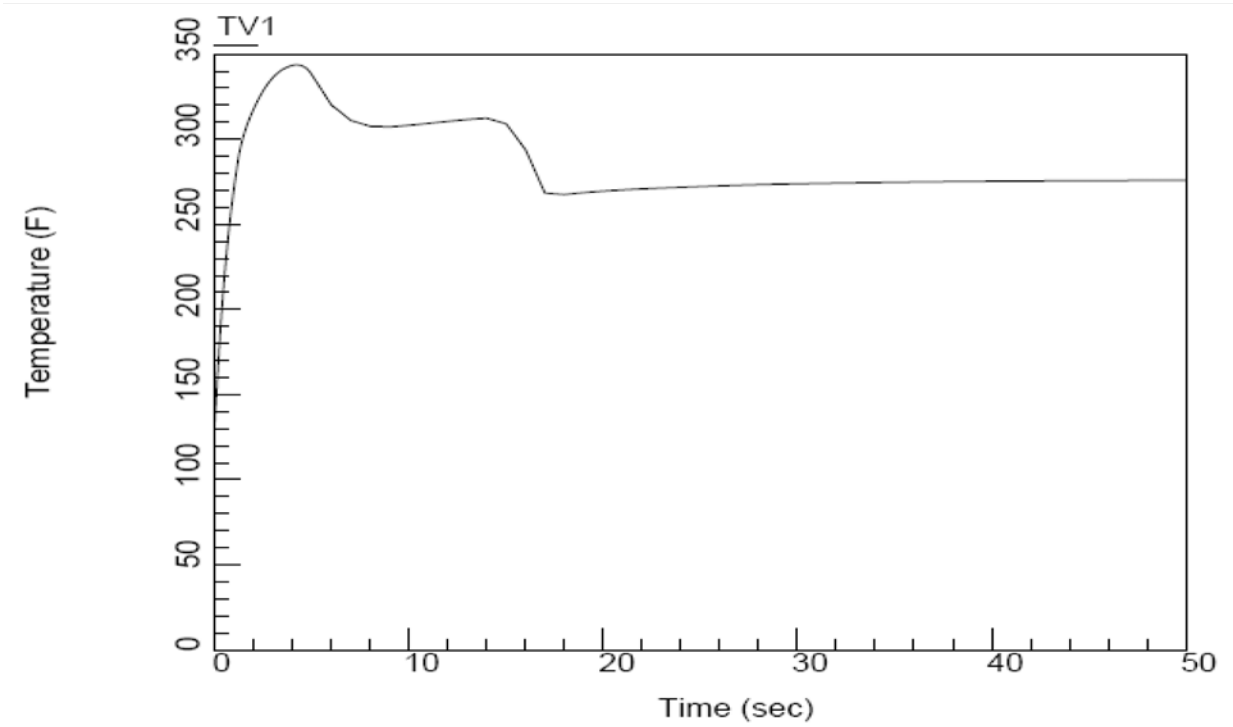

Figure 6.2-13a Drywell Temperature Time History for MSLB

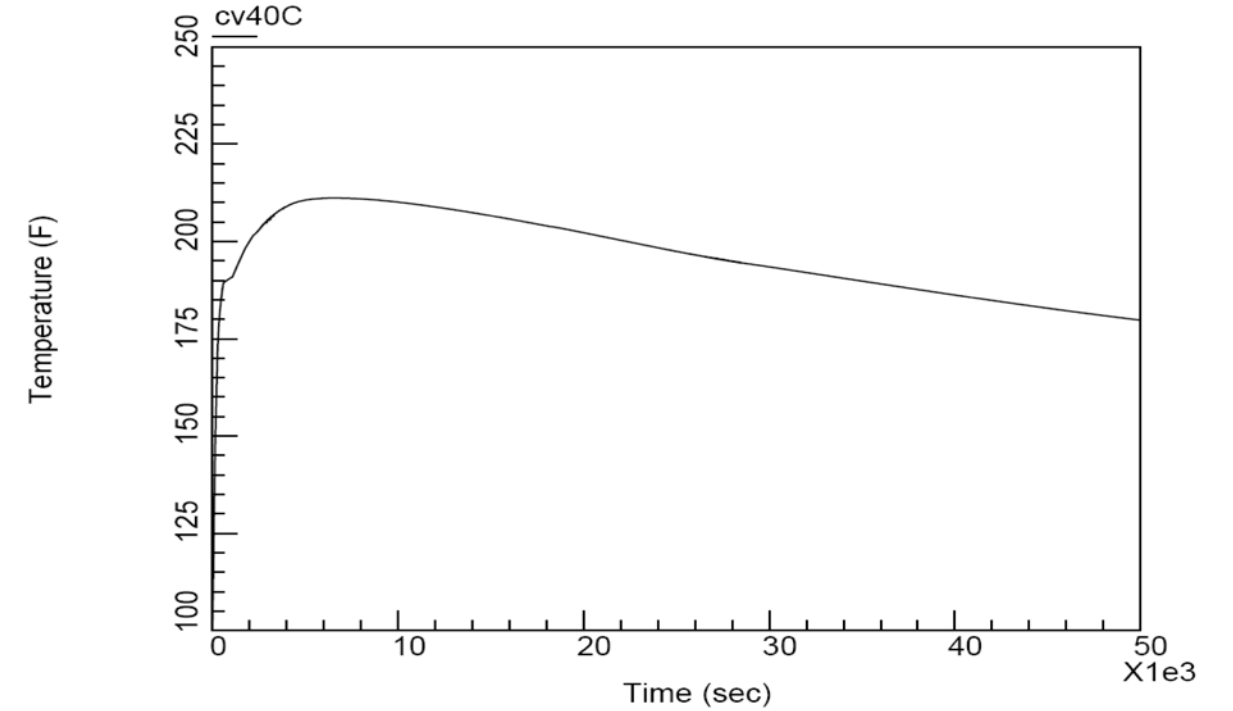

Figure 6.2-13b Suppression Pool Temperature Time History for MSLB

Figure 6.2-14 ~~*Pressure-Time History for MSLB with Two-Phase Blowdown Starting at One Second*~~Not Used

Figure 6.2-15 ~~*Temperature Time History for MSLB with Two-Phase Blowdown Starting at One Second*~~Not Used

Figure 6.2-22 ~~*Break Flow Rate and Specific Enthalpy for the Feedwater Line Break Flow Coming from the Feedwater System Side*~~Not Used

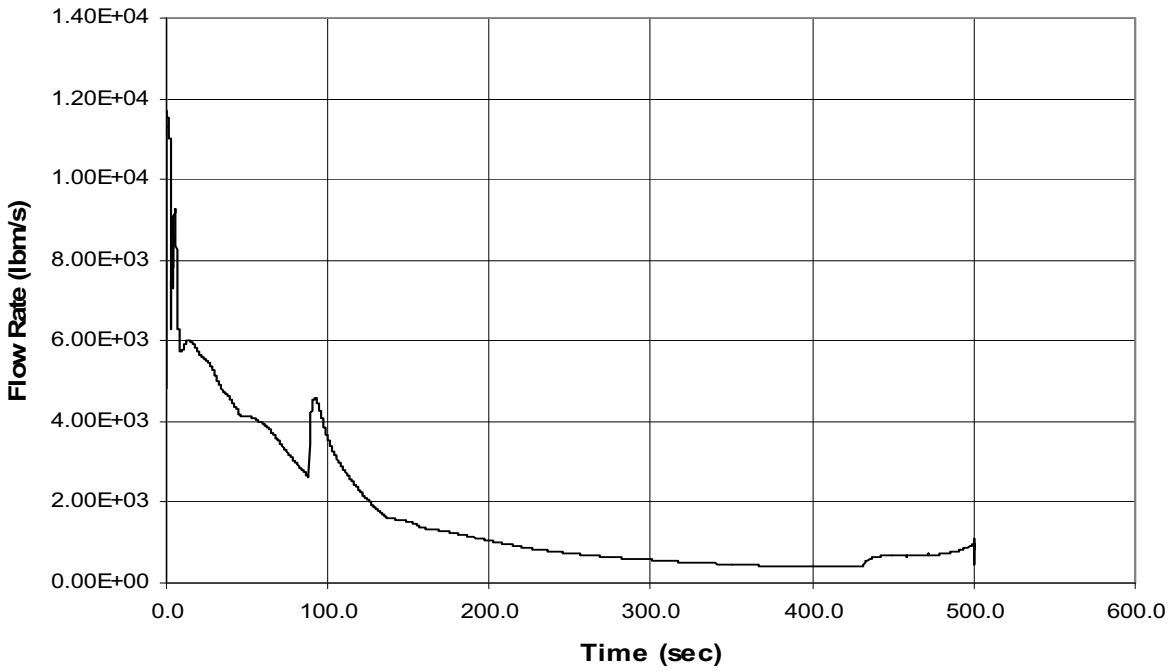

Figure 6.2-23a Break Flow Rate for the Feedwater Line Break Flow coming from the RPV Side

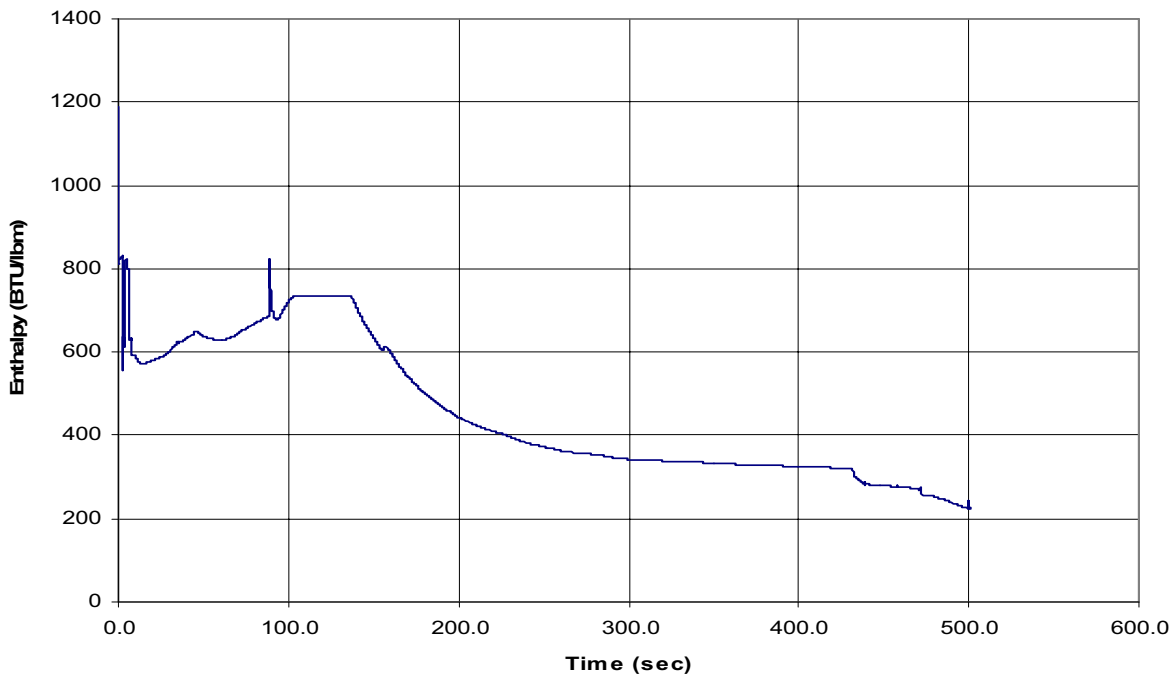

Figure 6.2-23b Break Flow Specific Enthalpy for the Feedwater Line Break Flow coming from the RPV Side

Figure 6.2-24 ~~*Break Flow Rate and Specific Enthalpy for the Main Steamline Break with Two-Phase Blowdown Starting When the Collapsed Water Level Reaches the Steam Nozzle*~~Not Used

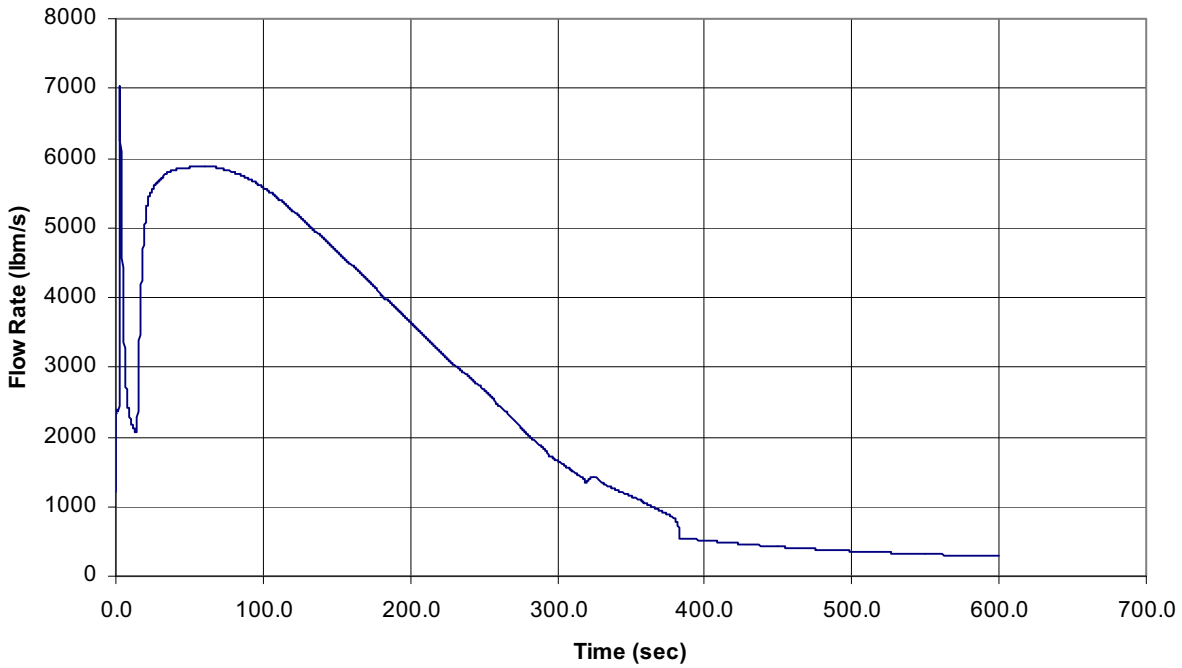

Figure 6.2-25a MSLB Short Term Break Flow (RPV Side)

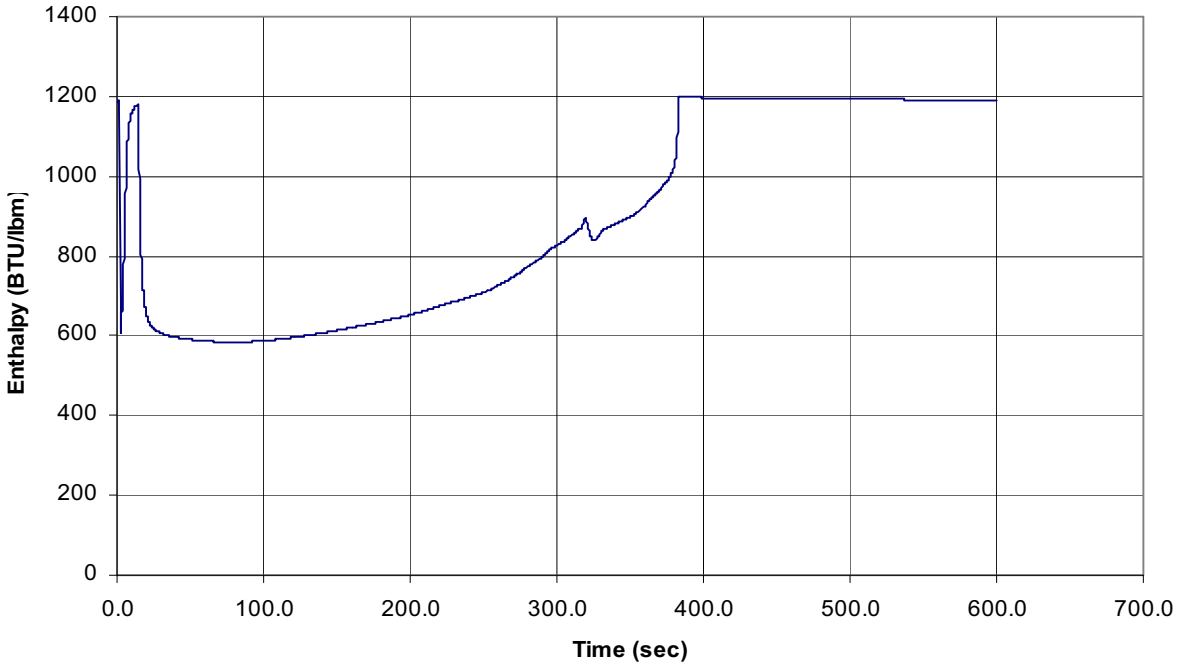

Figure 6.2-25b MSLB Short Term Break Flow (RPV Side)

Figures 6.2-38, 6.2-39, and 6.2-40 are revised and are located in Chapter 21:

Figure 6.2-38 Plant Requirements, Group Classification and Containment Isolation Diagram (Sheets 1 – 2)

STD DEP T1 2.4-3

The alternate RCIC design eliminates the barometric condenser and discharge piping to the containment.

STD DEP T1 2.14-1

The FCS is eliminated in accordance with NRC rules and regulations.

STD DEP 9.3-2

This departure uses an existing spare containment penetration for the Breathing Air System. The breathing air line has a manually operated valve inside the containment and a manually operated valve outside containment which will be closed during normal operation.

Figure 6.2-40 ~~*Flammability Control System P&ID (Sheets 1-2)*~~Not Used

STD DEP T1 2.14-1

The FCS is eliminated in accordance with NRC rules and regulations.

Figure 6.2-41 ~~*Hydrogen and Oxygen Concentrations in Containment After Design Basis LOCA*~~Not Used

6.3 Emergency Core Cooling Systems

The information in this section of the reference ABWR DCD, including all subsections, tables, and figures, is incorporated by reference with the following departures and supplements.

STD DEP Admin

STD DEP T1 2.4-1

STD DEP T1 2.4-3

STD DEP T1 2.4-4 (Figure 6.3-1)

STD DEP T1 3.4-1

STD DEP 1.8-1

STD DEP 7.3-11 (Figure 6.3-7)

STD DEP 6C-1 (Table 6.3-8, Table 6.3-9, Figure 6.3-1)

As required by Section IV.A.3 of Appendix A of Part 52, the ABWR Design Certification Rule, the plant-specific DCD must physically include the proprietary and safeguards information referenced in the ABWR DCD. Section 6.3 in the reference ABWR DCD references proprietary information in various tables and figures.. That proprietary information is provided in COLA Part 10, has finality in accordance with Section VI.B.2 of the ABWR Design Certification Rule, and does not constitute a supplement to or departure from the reference ABWR DCD. Table 6.3-6 and Figures 6.3-10 through 6.3-79 are located in COLA Part 10. The departures described in this section have no impact on these proprietary tables and figures.

6.3.2.2 Equipment and Component Descriptions

STD DEP T1 2.4-4

Regulatory ~~Guide~~ Guides *1.1* and 1.82 *~~prohibits~~* prohibit *design reliance on pressure and/or temperature transients expected during a LOCA for assuring adequate NPSH. The requirements of ~~this~~* these *Regulatory ~~Guide~~* Guides *are applicable to the HPCF, RCIC and RHR pumps.*

6.3.2.2.3 Reactor Core Isolation Cooling System (RCIC)

STD DEP T1 2.4-3

The RCIC System consists of a steam-driven turbine ~~which drives a~~ integral with a *pump assembly. The system also includes piping, valves, and instrumentation necessary to implement several flow paths. The RCIC steam supply line branches off one of the main steamlines (leaving the reactor pressure vessel) and goes to the RCIC turbine with drainage provision to the main condenser. The turbine exhausts to the suppression pool with vacuum breaking protection. Makeup water is supplied from the*

*CST and the suppression pool with the preferred source being the CST. RCIC pump discharge lines include the main discharge line to the feedwater line, a test return line to the suppression pool, a minimum flow bypass line to the ~~pool~~*suppression pool*~~, and a cooling water supply line to auxiliary equipment~~. The piping configuration and instrumentation is shown in Figure 5.4-8. The process diagram is given in Figure 5.4-9.*

6.3.2.2.4 Residual Heat Removal System (RHR)

STD DEP T1 2.4-1

In the shutdown cooling mode, with the pump suction being taken from the reactor pressure vessel (via the shutdown cooling lines), the pump discharge within these loops provides a flow path back to the reactor vessel via the core cooling discharge return lines, and feedwater line, or to the upper reactor well via the fuel cooling system ~~(on two loops only)~~.

With the pump suction being taken from the skimmer surge tanks of the fuel pool cooling system, the pump discharge is returned to the fuel pool ~~on two loops only~~.

For each loop, a minimum flow bypass line is also provided to return water to the suppression pool to prevent pump damage due to overheating when the injection valves on the main discharge lines are closed. The bypass line connects to the main discharge lines between the main pump and the discharge check valve. A motor-operated valve on the bypass line automatically closes when flow in the main discharge line is sufficient to provide the required pump cooling. A flow element in the main discharge line measures system flow rate during LOCA and test conditions and automatically controls the motor-operated valve on the bypass lines. The motor-operated valve does not receive an *automatic signal~~s~~* to open *unless the associate pump indicates a high discharge pressure.*

6.3.3.2 Acceptance Criteria for ECCS Performance

STD DEP Admin

Criterion 2: Maximum Cladding Oxidation

"The calculated total local oxidation of the cladding shall nowhere exceed 0.17 times the total cladding thickness before oxidation." Conformance to Criterion 2 is shown in ~~Figure 6.3-10 (Break Spectrum) and~~ Table 6.3-4 (Summary of LOCA Analysis Results) for the system response analysis. This limit will be assured for the limiting break. See Subsection 6.3.6 for COL license information.

Criterion 4: Coolable Geometry

"Calculated changes in core geometry shall be such that the core remains amenable to cooling." As described in Reference ~~6.2-1~~ 6.3-1*, Section III.A, conformance to Criterion 4 is demonstrated by conformance to Criteria 1 and 2.*

Criterion 5: Long-Term Cooling

"After any calculated successful initial operation of the ECCS, the calculated core temperature shall be maintained at an acceptably low value and decay heat shall be removed for the extended period of time required by the long-lived radioactivity remaining in the core." Conformance to Criterion 5 is demonstrated generically for GE BWRs in Reference ~~6.2-1~~ 6.3-1, Section III.A. Briefly summarized, for any LOCA, the water level can be restored to a level above the top of the core and maintained there indefinitely.

6.3.3.10 Severe Accident Considerations

STD DEP Admin

If the LPFL is not initiated in time to prevent core damage, LPFL injection is still beneficial *by enhancing cooling and preventing radioactive heating from the core debris. If injection is initiated prior to vessel failure, melt progression may be arrested in-vessel. However, if vessel failure occurs, debris will relocate from the vessel breach into the lower drywell. Water flowing into the lower drywell will cover the core debris and enhance debris cooling.*

6.3.4.2.2 ADS Testing

STD DEP T1 3.4-1

*An ADS logic system functional test and simulated automatic operation of all ADS logic channels are to be performed at least once per plant operating interval between reactor refuelings. ~~Instrumentation~~*Sensor and logic *channels are demonstrated operable by the performance of a ~~channel~~*divisional *functional test~~ and a trip unit calibration~~ at least once per month and a transmitter calibration at least once per operating interval.*

6.3.5 Instrumentation Requirements

STD DEP 1.8-1

*All instrumentation required for automatic and manual initiation of the HPCF, RCIC, RHR and ADS Systems is discussed in Subsection 7.3.1, and is designed to meet the requirements of IEEE-~~279~~*603 *and other applicable regulatory requirements. The HPCF, RCIC, RHR and ADS Systems can be manually initiated from the control room.*

6.3.6 COL License Information

6.3.6.1 ECCS Performance Results

The following site-specific supplement addresses COL License Information Item 6.6.

No departures are being taken from the fuel design licensing basis that is described in the reference ABWR DCD, including the core loading map used for response analysis in Figure 4.3-1 and the basic control strategy in Table 4A-1. Consequently, the exposure-dependent MAPLHGR, peak cladding temperature, and oxidation fraction

for the initial core bundle design based on the limiting break size are provided in subsection 6.3.3 of the DCD.

6.3.6.2 ECCS Testing Requirements

The following site-specific supplement addresses COL License Information Item 6.7.

In accordance with the Technical Specifications, a test will be performed every refueling outage in which each ECCS subsystem is actuated through the emergency operating sequence. The test procedure will be developed consistent with the plant operating procedure development plan in Section 13.5. (COM 6.3-2)

6.3.6.3 Limiting Break Results

The following site-specific supplement addresses COL License Information Item 6.7a.

No departures are being taken from the fuel design licensing basis that is described in the reference ABWR DCD, including the core loading map used for response analysis in Figure 4.3-1 and the basic control strategy in Table 4A-1. Consequently, the analysis results for the limiting break for the bundle design are provided in subsection 6.3.3.7.3 of the DCD.

Table 6.3-8 Design Parameters for HPCF System Components

(1) Main Pumps (C001)

NPSH Required	~~2.2m~~ 1.7m

Table 6.3-9 Design Parameters for RHR System Components

(1) Main Pumps (C001)

NPSH Required	~~2.4m~~ 2.0m

6.4 Habitability Systems

The information in this section of the reference ABWR DCD, including all subsections, tables, and figures, is incorporated by reference with the following departure and supplement.

STD DEP 9.4-2

6.4.4.2 Smoke and Toxic Gas Protection

STD DEP 9.4-2

The main control area envelope is normally exhausted from the recirculation plenum by one of the exhaust fans. Smoke removal is accomplished by starting both exhaust fans at high speed in conjunction with a supply fan. ~~and realigning the dampers for exhausting directly to the exhaust vent.~~ The recirculation damper is closed and the damper in the bypass duct around the air handling unit is opened. *The above changeover is under manual control from the main control room. Operating personnel in the control room exercise this option in response to signals from the smoke detection sensors located in the subject spaces and in the associated ductwork.*

6.4.7 COL License Information

6.4.7.1 Toxic Gases

The following site-specific supplement addresses COL License Information Item 6.8.

Instrumentation to detect and alarm a hazardous chemical release in the STP 3 & 4 vicinity and to isolate the main control area envelope from such releases is not required based on analyses in Subsection 2.2S.3. No hazardous chemicals with quantities exceeding the criteria of Regulatory Guide 1.78 have been identified.

6.5 Fission Products Removal and Control Systems

The information in this section of the reference ABWR DCD, including all subsections, tables, and figures, is incorporated by reference with the following departure and supplements.

6.5.3.1 Primary Containment

The following standard departure reflects the removal of the flammability control system.

STD DEP T1 2.14-1

The primary containment atmosphere is inerted with nitrogen by the Atmospheric Control System (ACS). The ACS is described in Subsection 6.2.5. ~~Following the design basis LOCA, the Flammability Control System (FCS) controls the concentration of oxygen in containment. Oxygen is generated by the radiolytic decomposition of water.~~

6.5.5 COL License Information

6.5.5.1 SGTS Performance

The following standard supplement addresses COL License Information Item 6.9.

A secondary containment draw-down analysis will be performed, in accordance with Final Safety Evaluation Report (NUREG-1503, Page 6-51), prior to preoperational testing, based on actual as-built secondary containment and SGTS design, to demonstrate the capability of SGTS to achieve and maintain the design negative pressure of 0.25 in-wg within 20 minutes from the time secondary containment isolation is initiated, following a LOCA. The analysis will include inleakage from the open, non-isolated penetration lines identified during construction engineering and will assume the worst single failure of a secondary isolation valve to close. In accordance with 10 CFR 50.71(e), the FSAR will be updated to document the results of the analysis. (COM 6.5-1)

6.5.5.2 SGTS Exceeding 90 Hours of Operation Per Year

The following standard supplement addresses COL License Information Item 6.9a.

The capability of the SGTS system to perform its intended function in the event of a LOCA will be demonstrated by appropriate laboratory testing of a representative sample of charcoal adsorber in accordance with Regulatory Guide 1.52, Revision 2, and Technical Specification 5.5.2.7 Ventilation Filter Testing Program (VFTP), if more than 90 hours of operation per year (excluding test) for either train is anticipated by plant operations based on the operating experience. This requirement is contained in the VFTP and its associated procedures.

6.5.6 References

The information in this subsection of the reference ABWR DCD is incorporated by reference with the following standard supplement.

6.5-2 Final Safety Evaluation Report Related to the Certification of the Advanced Boiling Water Reactor Design, July 1994 (NUREG-1503).

6.6 Preservice and Inservice Inspection, and Testing of Class 2 and 3 Components and Piping

The information in this section of the reference ABWR DCD, including all subsections, and tables, is incorporated by reference with the following departures and supplements.

STD DEP T1 2.4-1 (Table 6.6-1, Residual Heat Removal System)

STD DEP T1 2.4-3 (Table 6.6-1, Reactor Core Isolation Cooling System)

STD DEP T1 2.14-1 (Table 6.6-1, Flammability Control System)

STD DEP 6.6-1

STD DEP 6.6-2

STD DEP Admin

This subsection describes the preservice and inservice inspection and system pressure test programs for Quality Groups B and C (i.e., ASME Code Class 2 and 3 items, respectively). It describes those programs implementing the requirements of ASME B&PV Code Section XI, Subsections IWC and IWD. The requirements for subsequent inservice inspection intervals are addressed in Subsection ~~5.3.3.7~~6.6.4.*

6.6.2.1 Class 2 RHR Heat Exchangers

STD DEP 6.6-1

The physical arrangement of the residual heat removal (RHR) heat exchangers shall be conducive to the performance of the required ultrasonic and surface examinations. ~~The RHR heat exchanger nozzle-to-shell welds will be 100% accessible for preservice inspection during fabrication but might have limited areas that will not be accessible from the outer surface for inservice examination techniques.~~ Any inservice inspection program relief request will be reviewed by the NRC staff based on the Code Edition and Addenda in effect and inservice inspection techniques available at the time of COL application. Removable thermal insulation is provided or those welds and nozzles selected for frequent examination during the inservice inspection. Platforms and ladders are provided as necessary to facilitate examination.

6.6.2.2 Class 2 Piping, Pumps, Valves, and Supports

STD DEP 6.6-1

Restrictions: For piping systems and portions of piping systems subject to volumetric ~~and surface~~ examination, the following piping designs are generally *not used:*

Straight sections of pipe and spool pieces shall be added between fittings. The minimum length of the spool piece has been determined by using the formula, L = 2T + 15.24 cm, where L equals the length of the spool piece (not including weld preparation) and T equals the pipe wall thickness (cm).

Where less than the minimum straight section length is used, an evaluation is performed to demonstrate that sufficient access exists to perform the required examinations.

6.6.7.2 Erosion-Corrosion

STD DEP 6.6-2

Piping systems determined to be susceptible to ~~single-phase~~ erosion-corrosion shall be subject to a program of nondestructive examinations to verify the system structural integrity. The examination schedule and examination methods shall be determined in accordance with ~~the NUMARC program (or another equally effective program), as discussed in~~ Generic Letter 89-08, the guidelines of EPRI NSAC-202L Rev. 3*, and applicable rules of Section XI of the ASME Boiler and Pressure Vessel Code.*

6.6.9 COL License Information

6.6.9.1 PSI and ISI Program Plan

The following site-specific supplement addresses COL License Information Item 6.10.

STPNOC will prepare a comprehensive plant-specific PSI and ISI program plan. This plan is outlined in reference ABWR DCD Section 6.6 for Class 2 and 3 components and in reference ABWR DCD Section 5.2 for Class 1 components. This plan will be submitted to the NRC at least 12 months prior to commercial power operation for the respective unit, based on the final as-built plant configuration, addressing specific welds, bolting, pipe supports, etc. There will be a separate plan for Unit 3 and for Unit 4. (COM 6.6-1)

The initial inservice examinations conducted during the first 120 months of operation will comply, to the extent practical, with the requirements of the ASME B&PV Code Section XI Edition and Addenda incorporated by reference in 10 CFR 50.55a(b) on the date 12 months prior to the date of issuance of the operating license, subject to modifications listed by the reference sections.

The inservice examinations conducted throughout the service life of the plant will comply, to the extent practical, with the requirements of the ASME B&PV Code Section XI Edition and Addenda incorporated by reference in 10 CFR 50.55a(b) 12 months prior to the start of the inspection interval, subject to limitations listed by the reference sections.

6.6.9.2 Access Requirement

The following standard supplement addresses COL License Information Item 6.11.

The plans for NDE during design and construction are incorporated in order to meet all access requirements of the regulations, per IWC 2500 and IWD 2500 (Subsection 6.6.2). As an integral part of the design process, the access requirements are incorporated in the applicable specifications.

6.6.10 References

6.6-1 “Recommendations for an Effective Flow-Accelerated Corrosion Program”, NSAC-202L-R3, 1011838, Electric Power Research Institute, May 2006.

Table 6.6-1 Examination Categories and Methods

Quality Group	System Number	System Title	System Description	P&ID Diagram	Sec. XI Exam Cat.	Items Examined	Exam Method
~~C~~	~~T49~~	~~Flammability Control~~	~~Piping from valves F006A & B up to and including the recombiner skids A & B~~	~~Figure 6.2-40~~			
			~~All pressure-retaining components and piping~~		~~D-B~~	~~External Surfaces (Note 7)~~	~~VT-2~~
			~~Integral attachments~~		~~D-B~~	~~Welds (Note 8)~~	~~VT-3~~
			~~Piping and Component Supports~~		~~F-A~~	~~Supports (Note 6)~~	~~VT-3~~
			~~All Class C piping 20A, 25A, 50A, 80A and 100A in diameter, i.e.:~~ ~~- drain lines~~ ~~- test connections~~ ~~- SRV discharge line~~ ~~- instrument lines~~ ~~- small process lines~~ ~~- and etc.~~	~~Figure 6.2-40~~	~~Exempted per IWD-1220~~		
			~~All pressure-retaining components and piping~~		~~D-B~~	~~External Surfaces (Note 7)~~	~~VT-2~~
			~~Integral attachments~~		~~D-B~~	~~Welds (Note 8)~~	~~VT-3~~
			~~Piping and Component Supports~~		~~F-A~~	~~Supports (Note 6)~~	~~VT-3~~

Table 6.6-1 Examination Categories and Methods (Continued)

Quality Group	System Number	System Title	System Description	P&ID Diagram	Sec. XI Exam Cat.	Items Examined	Exam Method
B	E11	RHR	150A-RHR-022 Piping				
			Integral attachments		C-C	Welds (Note 3)	MT
			All pressure-retaining components and piping		C-H	External surfaces (Note 5)	VT-2
			Piping and component supports		F-A	Supports (Note 6)	VT-3
			Fuel pool suction lines to RHR from valves ~~F016B & C~~ **F016A,B & C** up to and including connection to the shutdown cooling suction lines of RHR ~~B & C~~ **A, B &C**	Figure 5.4-10 sh. 2			
			300A-RHR-215 Piping		C-F-2	Welds (Note 1)	UT, MT
			300A-RHR-114 Piping				
			300A-RHR-099 Piping				
			Integral attachments		C-C	Welds (Note 3)	MT
			All pressure-retaining components and piping		C-H	External surfaces (Note 5)	VT-2
			Piping and component supports		F-A	Supports (Note 6)	VT-3

Table 6.6-1 Examination Categories and Methods (Continued)

Quality Group	System Number	System Title	System Description	P&ID Diagram	Sec. XI Exam Cat.	Items Examined	Exam Method
B	E11	RHR	Fuel pool return lines from drywell spray line header up to and including valves ~~F015B & C~~ **F015 A,B & C**	Figure 5.4-10 ~~sh. 5, 7~~ **sh. 3,5 & 7**			
			300A-RHR-214 Piping		C-F-2	Welds (Note 1)	UT-MT
			300A-RHR-113 Piping				
			300A-RHR-099 Piping				
			Integral attachments		C-C	Welds (Note 3)	MT
			All pressure-retaining components and piping		C-H	External surfaces (Note 5)	VT-2
			Piping and component supports		F-A	Supports (Note 6)	VT-3
			All class B piping 20A, 25A, 40A, 50A and 100A in diameter, i.e.: - drain lines - vent lines - makeup lines for water leg seal including fill pump - minimum flow bypass lines - instrument lines - sampling lines - wetwell spray lines - SRV discharge lines - equalizing lines - and etc.	Figure 5.4-10 sh. 2-6	Exempted per IWC 1221 (a),(c)		

Table 6.6-1 Examination Categories and Methods (Continued)

Quality Group	System Number	System Title	System Description	P&ID Diagram	Sec. XI Exam Cat.	Items Examined	Exam Method
B	*E51*	*RCIC (Cont.)*	*All pressure retaining piping and components*		*C-H*	*External surfaces (Note 5)*	*VT-2*
			Piping and component supports		*F-A*	*Supports (Note 6)*	*VT-3*
			All Class B piping 15A, 20A, 25A, 50A and 100A in diameter, i.e.: *- ~~cooling water line~~* *- minimum flow bypass* *- test return line* *- leakoff lines* *- ~~vacuum pump discharge line~~* *- ~~condensate pump discharge line~~* *- test connections* *- makeup line for water leg seal* *- SRV discharge line* *- vacuum breaker line* *- and etc.*	*Figure 5.4-8 sh. 1–3*	*Exempted per IWC-1221 (a), (c)*		

Table 6.6-1 Examination Categories and Methods (Continued)

Quality Group	System Number	System Title	System Description	P&ID Diagram	Sec. XI Exam Cat.	Items Examined	Exam Method
C	*P21*	*Reactor Building Cooling Water (Cont.)*	*All Class C branch lines 100A and smaller, i.e.:*	*Figure 9.2-1 sh. 1, 2, 4, 5, 7, 8*	*Exempted per IWD-1220*		
			- lines to and from RHR/HPCF pumps seals, motor bearing coolers *- lines to and from RCIC pump room coolers* *- instrument lines* *- lines to and from FPC~~,~~ and SGTS~~, FCS~~room coolers* *- lines to and from CAM System coolers and air conditioning unit* *- drain lines* *- test connections* *- and etc.*				
			All pressure-retaining components and piping		*D-B*	*External Surfaces (Note 7)*	*VT-2*
C	*P41*	*Reactor Service Water*	*From suction strainers through RSW pumps C001A, D, B, E, C, F, and through RCW HXs and into but not including the discharge canal to the ultimate heat sink.*	*Figure 9.2-7*			
			All pressure-retaining components and piping		*D-B*	*External Surfaces (Note 7)*	*VT-2*
			Integral attachments		*D-B*	*Welds (Note 8)*	*VT-3*
			Piping and Component Supports		*F-A*	*Supports (Note 6)*	*VT-3*

6.7 High Pressure Nitrogen Gas Supply System

The information in this section of the reference ABWR DCD, including all subsections, tables and figures, is incorporated by reference with no departures or supplements.

6A Regulatory Guide 1.52, Section C, Compliance Assessment

The information in this appendix of the reference ABWR DCD is incorporated by reference with no departures or supplements.

6B SRP 6.5.1, Table 6.5.1-1 Compliance Assessment

The information in this appendix of the reference ABWR DCD is incorporated by reference with the following departure.

STD DEP 7.1-1

Adsorber

The ABWR SGTS design provides single division of high temperature alarm both directly upstream and downstream of the charcoal adsorber. The purpose of this alarm is to alert the operator to the potential for desorption of iodine from the charcoal (if the SGTS is operating post-accident) or of a failure in one of the temperature control and high alarm circuits associated with the heaters. The ~~setpoint~~ nominal setting *for this alarm signal is 155°C. Should temperature reading and alarms indicate a continued and uncontrolled high temperature during SGTS operation, deluge actuation may be warranted. Pressure drop is provided at a local rack (for testing) and in the MCR.*

6C Containment Debris Protection for ECCS Strainers

The information in this appendix of the reference ABWR DCD is subject to several changes due to the adoption of a complex ECCS strainer design (e.g. Cassette Type Strainer). Consequently, for clarity it is presented in its entirety with the following departures incorporated. This strainer design has been used at numerous BWRs in Japan and numerous PWRs in the United States. The strainer is described in this appendix. Departure STD DEP Vendor changes General Electric (GE) to Toshiba in Section 6C.1.

STD DEP 6C-1 (Figure 6C-1)

STD DEP Vendor

The original DCD text is presented in *italics*, deletions are shown as ~~*strikethroughs*~~, and new text in underlined regular font.

6C.1 Background

*NRC Bulletin No. 93-02, Debris Plugging of Emergency Core Cooling Suction Strainers, (*Reference 6C-1*) NRC guidance and highlights the need to adequately accommodate debris in design by focusing on an incident at the Perry Nuclear Plant. ~~GE~~*Toshiba *reviewed the concerns addressed by NRC Bulletin 93-02*, including complying with Generic Letters GL 97-04 on NPSH requirements for ECCS pumps and GL 98-04 blockage from foreign materials and paint debris (References 6C-7 and 6C-8)*, and has reviewed the design of the ABWR for potential weaknesses in coping with the bulletin's concerns. ~~GE~~*Toshiba *has determined that the ABWR design is more resistant to these problems for a number of reasons as discussed in the following.*

The ultimate concern raised by the Perry incident was the deleterious effect of debris in the suppression pool and how it could impact the ability to draw water from the suppression pool during an accident. The ABWR design has committed to following the guidance provided in Regulatory Guide 1.82 (Reference 6C-2), Utility Resolution Guidance (URG) for ECCS Suction Strainer Blockage, NEDO-32686-A (Reference 6C-3) *and the additional guidance described below.*

The ABWR is designed to accommodate debris present in the suppression pool prior to Loss-of-Coolant Accident (LOCA) and *to inhibit debris generated during a LOCA from preventing operation of the Residual Heat Removal (RHR), Reactor Core Isolation Cooling (RCIC) and High Pressure Core Flooder (HPCF) system.*

6C.2 ABWR Mitigating Features

The ABWR has substantially reduced the amount of piping in the drywell relative to earlier designs and consequently the quantity of insulation required. Furthermore, there is no equipment in the wetwell spaces that requires insulation or other fibrous materials. The ABWR design conforms with the guidance provided by the NRC for maintaining the ability for long-term recirculation cooling of the reactor and containment following a LOCA.

The Perry incident was not the result of a LOCA but rather debris entering the Suppression Pool during normal operation. The arrangement of the drywell and wetwell/wetwell airspace on a Mark III containment (Perry) is significantly different from that utilized in the ABWR design. In the Mark III containment, the areas above the suppression pool water surface (wetwell airspace) are substantially covered by grating with significant quantities of equipment installed in these areas. Access to the wetwell airspace (containment) of a Mark III is allowed during power operations. In contrast, on the ABWR the only connections to the suppression pool are 10 drywell connecting vents (DCVs), and access to the wetwell or drywell during power operations is prohibited. The DCVs will have horizontal steel plates located above the openings that will prevent any material falling in the drywell from directly entering the vertical leg of the DCVs. This arrangement is similar to that used with the Mark II connecting vent pipes. Vertically oriented trash rack construction will be installed around the periphery of the horizontal steel plate to intercept debris. The trash rack design shall allow for adequate flow from the drywell to wetwell. In order for debris to enter the DCV it would have to travel horizontally through the trash rack prior to falling into the vertical leg of the connecting vents. Thus the ABWR is resistant to the transport of debris from the drywell to the wetwell.

In the Perry incident, the insulation material acted as sepia to filter suspended solids from the suppression pool water. The Mark I, II, and III containments have all used carbon steel in their suppression pool liners. This results in the buildup of corrosion products in the suppression pool, which settle out at the bottom of the pool until they are stirred up and resuspended in the water following some event (SRV lifting). In contrast, the ABWR liner of the suppression pool is fabricated from stainless steel which significantly lowers the amount of corrosion products which can accumulate at the bottom of the pool.

A further mitigating feature for the ABWR is that all thermal insulation installed is reflective metal insulation type (RMI) and the use of fibrous material in the primary containment is prohibited. Use of RMI minimizes the fibrous insulation source term used in the suction strainer design. This is a significant factor in design that reduces the potential suction strainer debris load and further reduces the potential for suction strainer blockage. In addition, inspections will ensure that there is no evidence of excessive build-up of debris around the ECCS suction strainers and any abnormalities that could affect the mechanical functioning of the suction strainers.

Since the debris in the Perry incident was created by roughing filters on the containment cooling units, a comparison of the key design features of the ABWR is necessary. In the Mark III design more than 1/2 of the containment cooling units are effectively located in the wetwell airspace. For the ABWR there are no cooling fan units in the wetwell air space. Furthermore the design of the ABWR Drywell Cooling Systems does not utilize roughing filters on the intake of the containment cooling units.

Temporary filters are used during post construction systems testing in accordance with plant housekeeping and foreign material exclusion procedures further reducing the potential for introducing debris to the suppression pool.

In the event that small quantities of debris enter the suppression pool, the Suppression Pool Cleanup System (SPCU) will remove the debris during normal operation. The SPCU is described in Section 9.5.9 and shown in Figure 9.5-1. The SPCU is designed to provide a continuous cleanup flow of 250 m^3/h. This flow rate is sufficiently large to effectively maintain the suppression pool water at the required ~~*purity*~~ cleanliness*. The SPCU system is intended for continuous operation and the suction pressure of the pump is monitored and provides an alarm on low pressure. Early indication of any deterioration of the suppression pool water quality will be provided if significant quantities of debris were to enter the suppression pool and cause the SPCU strainer to become plugged resulting in a low suction pressure alarm.*

The suction strainers design *at* Perry preceded and *did not meet the current regulatory requirements. The ABWR ECCS suction strainers will utilize* ~~*a "T" arrangement with conical strainers on the 2 free legs of the "T"*~~ a cassette type strainer design. ~~*This design separates the strainers so that it minimizes the potential for a contiguous mass to block the flow to an ECCS pump.*~~ The design of the strainers will be based on Regulatory Guide 1.82, NUREG/CR-6224 (Reference 6C-4), NUREG/CR-6808 (Reference 6C-5) and the Utility Resolution Guidance, NEDO-32686-A. The cassette type strainer design is based on a set of cassette modules with U-shaped filter pockets attached to the cylindrical outer jacket. Each strainer consists of filter modules, the outer jacket and flange plates on each end of the cylindrical assembly. The filter module is constructed with cassettes which are arranged axially along the strainer axis. One cassette consists of pocket shaped filters which are arranged radially. A cut-away drawing of the strainer is shown in Figure 6C-1. The material used in the cassette type strainer is stainless steel. The cylindrical strainer assemblies are mounted in pairs on piping tees at each ECCS pump suction line. When the ECCS pump operates, the suction flow in the suppression pool runs into all pockets through the outer jacket windows. Each pocket has five flow paths from the inlet through the five perforated walls to the outlet of the pocket towards the cassette strainer. By using the cassettes with the pocket shaped filters, the strainer has an available filter area which is larger per volume than cylindrical and other shaped strainers. The number of cassettes and pockets is adjusted to produce a specific head loss performance for the strainer. To avoid debris clogging the flow restrictions downstream of the strainers, the size of the holes in the perforated sheets is chosen by considering specific flow paths of ECCS equipment and piping (for example, the containment spray nozzle and the ECCS pump seal cooling flow orifices). The strainers will have holes no larger than 2.1 mm.

A key feature in the design of these strainers is to collect debris where velocity is low, since the pressure drop across the debris bed is known to be proportional to the velocity through the bed. This minimizes head loss across the strainer. *The ABWR design also has additional features not utilized in earlier designs that could be used in the highly improbable event that all suppression pool suction strainers were to become plugged. The alternate AC (Alternating Current) independent water addition mode of RHR allows water from the Fire Protection System to be pumped to the vessel and sprayed in the wetwell and drywell from diverse water sources to maintain cooling of the fuel and containment. The wetwell can also be vented at low pressures to assist in cooling the containment.*

6C.3 RG 1.82 Improvement

All ECCS strainers ~~will at a minimum be~~are sized to conform with the guidance provided in Reg. Guide 1.82, for the most severe of all postulated breaks.

The following clarifying assumptions ~~will also be~~are applied and ~~will~~ take precedence:

(1) The debris generation model ~~will~~ utilizes ~~right angle cones acting in both directions;~~spherical zones of influence (ZOI) with radii in accordance with the Utility Resolution Guidance, NEDO-32686-A.

(2) The amount of design insulation debris ~~load~~ that is ~~generated will be assumed to be 100% of the insulation in a distance of 3 L/D of the postulated break within the right angle cones including targeted insulation; and~~ transported to the suppression pool is based on the Utility Resolution Guidance, NEDO-32686-A.

(3) The strainer design is based on the Debris Load Fraction that accumulates on a given strainer for the LOCA case being considered. The debris load fraction is defined as the fraction of the total flow that is attributed to a given strainer.

(4) ~~All (100%) of the insulation debris generated will be assumed to be transported to the suppression pool.Transportation of insulation debris to the suppression pool will be in accordance with NEDO-32686-A.~~Not Used

(5) The debris in the suppression pool will be assumed to remain suspended until it is captured on the surface of a strainer.

(6) In addition to the above, 1 cu. ft. of latent fiber is assumed to be suspended in the suppression pool and deposited on the surfaces of the operating strainers.

(7) Design specifications prohibit aluminum inside primary containment. Despite that prohibition, it is conservatively assumed that there is 4.5 sq. ft. of aluminum in the primary containment. The use of zinc inside primary containment is also prohibited, except for the use of inorganic zinc primer in the qualified coating system. The impact of these assumptions is discussed in Section 6C.3.1.3 on Chemical Effects Debris.

~~The sizing of the RHR suction strainers will assume that the insulation debris in the suppression pool is evenly distributed to the 3 pump suctions. The strainer size will be determined based on this amount of insulation debris and then increased by a factor of 3. The flow rate used for calculating the strainer size will be the runout system flow rate.~~

Suction strainer sizing criteria is based on meeting NPSH requirements at run out system flow, and the design basis debris load including consideration of chemical effects, in the suppression pool that is considered to accumulate on the suction strainers after a number of pool volume turnovers.

The sizing of the RHR*, RCIC and HPCF suction strainers will conform to the guidance of Reg Guide 1.82 and* ~~*will assume*~~ assumes *that* all *the* ~~*insulation*~~ *debris in the suppression pool,* including insulation debris, corrosion sludge, dust, dirt, and chemical debris *is proportionally distributed to the pump suctions based on the flow rates of the systems at run out conditions* considering the most limiting system failures*. The strainers available for capturing insulation debris will include 2 RHR suction strainers and a single HPCF or RCIC suction strainer* in accordance with single failure criteria. The assessment of chemical effects is in accordance with RG 1.82, and includes evaluation of the suppression pool post-LOCA chemistry, and evaluation of potentially reactive material in the drywell. Downstream effects of material predicted to pass through the suction strainers will be evaluated in accordance with RG 1.82.

6C.3.1 Downstream and Chemical Effects Discussion

The ABWR design provides reasonable assurance that downstream effects as a result of debris bypassing the strainers will not have a deleterious effect on critical components such as fuel rods, valves and pumps downstream of the suction strainers. The basis of this assurance is provided in the following:

6C.3.1.1 Latent Debris Generation

Relative to the generation of latent debris, the ABWR contains a number of design features and controls which reduce the likelihood of such debris being generated as compared with operating BWR and PWR plants. Access to the containment during power operation is prohibited as the containment is inerted, thereby eliminating the likelihood of latent debris generation due to work being performed during power operation. In addition, in the unlikely event that latent debris exists in the suppression pool during power operation, the suppression pool cleanup (SPCU) system provides on-going cleanup. This system is run on an intermittent basis during power operation and provides an early indication of any deterioration of the suppression pool water quality. The suction pressure of the SPCU pump is monitored and provides an alarm on low pressure. During refueling outages, when latent debris could be generated by workers inside the containment, temporary filters are used during post-construction systems testing in accordance with plant housekeeping and foreign material exclusion procedures, further reducing the potential for introducing debris to the suppression pool. An operational program for suppression pool cleanliness, documented in accordance with Section 13.4S, provides for periodic inspections of the suppression pool for cleanliness during outage periods. This operational program is described in Subsection 6.2.1.7.1. Maintenance procedures provide procedure steps for removing, at periodic intervals, sediment and floating or sunk debris from the suppression pool that is not removed by the suppression pool cleanup system. Quarterly surveillance tests of Residual Heat Removal (RHR), High Pressure Core Flooder (HPCF), and Reactor Core Isolation Cooling (RCIC) systems provide further assurance that there is no blockage due to debris in the pump suction. Finally, the use of a stainless steel liner in the submerged portion of the ABWR suppression pool as opposed to carbon steel, which has been used in earlier version BWR suppression pools, significantly lowers the amount of corrosion products which can accumulate at the bottom of the suppression pool.

6C.3.1.2 LOCA-Generated Debris

Relative to the generation of debris from a postulated pipe break, the ABWR design contains a number of improvements from earlier BWR designs. The elimination of the recirculation piping removes a significant source of insulation debris from the containment and also reduces the likelihood of a large high energy pipe break which could lead to debris generation. All thermal insulation material in the primary containment is a Reflective Metallic Insulation (RMI) design. RMI breaks up into shards most of which are too large to pass through the ECCS suction strainers which have a maximum 2.1 mm (1/12 inch) hole size. Furthermore, the use of fibrous and calcium silicate materials in the primary containment is prohibited. With regard to LOCA-generated miscellaneous debris, the design minimizes the potential for such debris by specifying secure restraints, such as high tensile strength aircraft cable or specially designed bands, to secure equipment ID tags onto components located inside containment.

6C.3.1.3 Chemical Effects Debris

The primary containment will not contain reactive materials such as aluminum, phosphates, or calcium silicate, and minimizes zinc by prohibiting it except for a small amount in inorganic primers. In addition, the Suppression Pool Cleanliness program (Subsection 6.2.1.7.1) ensures that quantities of latent debris, which might include aluminum or fiber, are kept to a minimum. A solubility calculation indicates that more than 4.5 square feet of latent aluminum would have to be present in the suppression pool to form aluminum precipitates under bounding conditions post-LOCA. Ensuring that there is less than 4.5 square feet of latent aluminum is within the capability of the containment cleanliness program.

The evaluation of the 4.5 square feet of latent aluminum considered formation of aluminum oxyhydroxide under bounding pH and temperature conditions during the 30-day post-LOCA period. Additionally, formation of sodium aluminum silicate was considered due to potential exposure to concrete during the 30-day post-LOCA period. A surface area of 302 ft^2 of exposed concrete was postulated based on URG assumptions about failed qualified coatings on surfaces of walls and flooring that could be within the zone of influence of the break. (For the purpose of quantifying failed coatings (vs. exposed concrete), the URG doubled the 302 ft^2 to account for coatings on components, supports and structural steel that might also be within the ZOI.)

Evaluations of corrosion products from the postulated 4.5 square feet of latent aluminum conclude there would be no significant precipitation of the corrosion products due to the solubility of these corrosion products in the suppression pool. However, for conservatism, the downstream effects on fuel evaluation assumes that the small quantity of aluminum oxyhydroxide and sodium aluminum silicate predicted to form during the 30-day post LOCA period will not remain in solution.

The only form of zinc allowed inside primary containment is the inorganic zinc (IOZ) primer used in the qualified coatings system. The URG (Reference 6C-3) conservatively assumes that 604 square feet of qualified coatings are destroyed during the LOCA, which results in 47 pounds of IOZ. Analyses of the destroyed zinc primer

determined that a maximum of 58.6 pounds of corrosion product (in the form of zinc oxide) would result from the over 20,000 square feet of zinc surface area (based on 10 micron spheres), and this zinc corrosion product will conservatively be assumed to be non-particulate in the evaluation of downstream effects on fuel.

6C.3.1.4 Debris Transport

The ABWR contains design features which reduce the transport of accident-generated debris to the suction strainers. The wetwell, which is the chamber in direct contact with the suppression pool, is largely empty with the only significant components/structures being an access tunnel, a grated catwalk and the Safety Relief Valve (SRV) discharge piping. There are no normal operating high energy piping systems in the wetwell which could break and lead to debris generation. The high energy piping in the ABWR, which consists largely of the main steam, Reactor Water Cleanup (RWCU) system, and feedwater piping under normal operating conditions, is located in the upper drywell area. Any debris which is generated by a break in these systems would need to pass through a circuitous route involving any one of the ten drywell connecting vents (DCVs) and then through any one of the thirty horizontal vents before reaching the suppression pool. The DCVs have horizontal steel plates located above the openings that prevent any material falling in the drywell from directly entering the vertical leg of the DCVs. A vertically oriented trash rack is installed around the periphery of the horizontal steel plate to intercept debris. In order for debris to enter the DCV, it would have to travel horizontally through the trash rack prior to falling into the vertical leg of the connecting vents. Thus, the ABWR is resistant to the transport of debris from the drywell to the wetwell.

6C.3.1.5 Suction Strainer Design

In addition to these mitigating features, the downstream effects are reduced by the suction strainers themselves. The strainers are designed to protect the ECCS pumps to allow them to function long-term after an accident. As a result, they are designed so that 100% of the ECCS flow is routed through them and filtered such that particles 2.1 mm or larger are captured by the strainer. The strainers meet the requirements of Revision 3 of Regulatory Guide 1.82.

6C.3.1.6 Diversity of ECCS Delivery Locations to the Core

The ABWR has diversification of ECCS delivery points which helps to reduce the consequences of downstream blockage. Two HPCF systems deliver coolant to the region above (at the outlet of) the core. One LPCF system provides coolant through one of the feed water lines. The RCIC system delivers coolant to the other feedwater line. Two LPCF systems deliver coolant through separate spargers into the outer annulus region. Should any blockage occur in the lower core region, such as the fuel inlet, which could limit the effectiveness of systems like RHR, the HPCF will still be effective at providing cooling water because it delivers water through spargers located above the core.

Calculations have been performed indicating that even in the highly unlikely event of a complete blockage of the inlet of the fuel assembly and with minimal bypass flow,

sufficient flow would be provided from above the core by the HPCF to cool the fuel assemblies.

6C.3.1.7 Fuel Assembly Bypass Flow

The ABWR is designed to provide for fuel assembly bypass flow to cool the control rods between fuel assemblies. The bypass flow is upstream of the fuel assembly tie plate and any integral debris filter. Calculations have shown that even in the highly unlikely event that a fuel assembly were to block completely, this bypass flow is sufficient to cool the fuel assemblies. Because this bypass hole size is much larger than the strainer hole size, it is highly unlikely to plug. The bypass flow paths, however, were not credited in the analysis that developed the test acceptance criteria for the fuel tests.

6C.3.1.8 Related Tests

Preliminary data from testing conducted by Westinghouse (WEC) to resolve GSI-191 has not identified any coagulation of particulate debris until after fiber is introduced to the flow stream. Blockage of small clearances in downstream components is not likely for the downstream components due to the small amount of assumed latent fiber. Regarding acceptance criteria for blockage of small clearances, it is noted that there should be no or minimal fiber downstream of the suction strainers because the only fiber potentially inside primary containment (latent loose debris) is not likely to be degraded during the pipe break and small enough to pass through the 2.1 mm diameter holes in the cassette type suction strainers. For conservatism, however, all of the latent fiber assumed to be in containment (1 cu. ft.) will be assumed to be destroyed fibrous insulation small enough to all pass through the ECCS suction strainers.

6C.3.1.9 Downstream Fuel Effects Test

For the initial fuel load, a downstream effects test for the fuel is performed to ensure that small debris passing through the suction strainers does not impair the flow to the core. The detailed test procedure will be provided to the NRC at least six months prior to performing the test and will reflect industry experience with performance of such tests, for example consideration of fuel assembly geometry, debris addition and test protocol, number of tests, and provisions for assessing test variability (COM 6C-2). The following discusses the test plan, the analysis basis, and the debris assumptions used in this test.

6C.3.1.9.1 Analysis

6C.3.1.9.1.1 Introduction

An analysis determines the acceptable level of blockage in the fuel by LOCA generated debris which bypasses the ECCS suction strainer. This analysis ensures that the long term core cooling per Criterion 5 of 10CFR50.46 is maintained, the calculated peak clad temperature is maintained at an acceptably low value, and decay heat is removed for an extended period of time required by the long-lived radioactivity remaining in the core. Potential deposition of particulate, chemical effects and fibrous debris on the fuel and its impact on the heat transfer from the cladding is also included in the evaluation.

The results of the analysis are used to determine the acceptance criteria for the downstream fuel effects test, to be performed at least 18 months prior to initial fuel load.

6C.3.1.9.1.2 Analysis Approach

Although the diversification of ECCS delivery points (injection into the top of the core by the High Pressure Core Flooders and injection into the downcomer by the Low Pressure Core Flooder and Reactor Core Isolation Cooling) helps reduce the consequences of a blockage in the fuel assembly, for this analysis it is assumed that all the debris is delivered to the bottom of the core and therefore, passes through the fuel inlet, which is the most likely place for blockage to occur.

The analysis is performed for a feedwater line break for the following reasons. Following the break and after the blowdown is complete, the water level in the downcomer rises to the feedwater line (i.e. the break elevation). At that point, all the excess flow from the Low Pressure Core Flooder (LPCF) or Reactor Core Isolation Cooling (RCIC), not injected into the core will flow out through the break. The flow rate into the core is dependent upon the natural circulation head of colder water in the downcomer and the hotter water and two-phase mixture in the core region. As the core inlet begins to block, the core flow rate decreases. A steam line break, being at a higher elevation, will produce a higher natural circulation flow and therefore is less limiting than a feedwater line break for establishing the pressure drop limit at the fuel inlet.

For this analysis, the flow area at the fuel inlet is reduced to simulate blockage of the inlet. All bypass flow paths are assumed to be blocked. The reduced flow area at the core inlet decreases the core inlet flow rate and increases the core inlet differential pressure (DP). The minimum flow area is determined to ensure that no point in the core experiences significant cladding heat-up, measured by ensuring that the void fraction at the top of the active fuel, on average remains < 0.95. The corresponding hydraulic loss at the core inlet is the parameter monitored and used as the acceptance criterion in the test.

Conservative values of the nodal power peaking and pin-to-pin peaking factors for the hot assembly are chosen to place the hot rod at the Thermal Mechanical Operating Limit (TMOL). A core power corresponding to a decay heat at 5 minutes after shutdown is assumed as the debris accumulates at the inlet and increases the hydraulic resistance. This core power corresponding to decay heat at 5 minutes is conservatively kept constant thereafter. For the reasons stated below, blockage sufficient to reduce core cooling within 5 minutes is not likely:

- The core and the upper plenum retain significant inventory during the blowdown. The void fraction in the upper plenum remains below 1.0. Therefore, additional water injected into the core before a quasi-steady state is established is minimal (i.e., the level in the downcomer increases to the FW line). After the quasi-steady state is achieved, the injection into the core is limited by the natural circulation head and core boil off.

- The debris laden flow from the suppression pool will be injected into the vessel only after the initial inventory of the ECCS piping, which is clean, is swept and injected into the vessel. Therefore, any suppression pool water will be further diluted by this clean initial injection.

- Although not credited in this analysis, the HPCF pumps (and RCIC) initially inject from the condensate storage tank (CST), which is a clean source of water. The LPCF pumps do not start injection until after 2 minutes.

In addition, a parametric study is performed to determine the effect of fouling caused by deposition of particulate, fibrous and chemical effects debris on the cladding. The level of initial fouling on the cladding is increased to represent the effect of deposition of debris on the cladding.

6C.3.1.9.1.3 Analysis Results

An analysis was performed to compare the core inlet DP, flow rate and void fractions for the cases with no blockage and with blockage resulting in an increase of the hydraulic resistance of the fuel inlet. The analysis results demonstrate that despite a very high level of hydraulic resistance, sufficient flow remains available to the core to ensure that the core void fraction both in the hot assembly and average assembly remain < 0.95.

In the ABWR design, the peak cladding temperature (PCT) occurs very early in the transient during the Reactor Internal Pumps (RIPs) coastdown phase, before ECCS injection occurs. Therefore, the PCT remains unaffected after the RIP coastdown by the subsequent blockage at the fuel inlet because the cladding temperature is maintained low (near the saturation temperature) as the core void fraction, both in the hot and average assemblies, is maintained below 0.95. The low fuel clad temperature also ensures that cladding oxidation does not occur in the long term cooling phase of the accident.

A study was performed on the effects of debris fouling on clad temperature. Normal clad fouling varies between 0.0-10.0μm, and this was increased to a uniform 30μm. This increase resulted in a maximum increase in clad temperature of 30°C.

In accordance with Westinghouse BWR LOCA methodology, the thickness of the "crud" layer is calculated. Assuming all the debris generated is deposited evenly over the fuel, it would generate a layer <15 μm thick. The layer includes fiber and chemical deposits. Additionally, all of the particulates except RMI shards were assumed to be deposited on the fuel surface as additional crud. A sensitivity study was performed in which a uniform 30 μm layer was applied along the length of the fuel. A 30 μm layer is conservative and accounts for normal fouling (<10 μm) and pre-existing cladding oxidation, in addition to the crud buildup from debris. This increased fouling layer was shown to cause a 30 degree increase in clad temperature at the time of Peak Clad Temperature (~5 seconds). However, this increase does not apply to the peak clad temperature (PCT), because, in all cases, the PCT occurs within seconds of the LOCA initiation and it would take several minutes for debris to begin to reach the fuel. Any increase in cladding temperature caused by debris occurs well after the initial PCT and

would be bounded by the 30°C evaluation. Consequently, any heatup caused by subsequent fuel crud deposition will not impact this initial PCT.

The results of the analysis provide an acceptable core inlet differential pressure (DP), corrected for the flow rates to account for the fact that the flow rate will decrease differently in the test loop (supplied by a pump) vs. in the analysis (controlled by natural circulation head). This is shown in the equation below:

$$\left[\frac{\Delta p_f}{\Delta p_i}\right]_{Test-Measured} = \left[\frac{\Delta p_f}{\Delta p_i}\right]_{LOCA-Aly} * \left(\frac{w_i}{w_f}\right)^2_{Aly} \left(\frac{w_f}{w_i}\right)^2_{Test}$$

Where subscript "*i*" denotes initial (i.e., unfouled conditions), "*f*" indicates fouled conditions, "*Aly*" refers to analysis, "*W*" is the flow rate into the assembly, and "Δp" is the hydraulic loss pressure drop from the bundle inlet to downstream of the third grid.

6C.3.1.9.2 Test Plan

A test facility is comprised of a fuel assembly mock-up, a pump, associated recirculation piping, and a mixing tank to add the debris. The test is conducted with a single partial height fuel assembly, including a fuel inlet nozzle, any integral debris filters, lower tie plate and fuel spacer grids. The cross-section of the fuel is modeled exactly; the length of the fuel assembly is reduced. The fuel assembly is unheated. The bypass flow paths are blocked for this test.

As described below, the testing will follow the test plan developed and implemented for the PWR Owners Group (PWROG) fuel debris capture testing with regard to debris preparation, addition of debris and monitoring pressure drop. This PWROG test plan is consistent with and accounted for revised NRC guidance for PWR's to respond to Generic Letter 2004-02 (Reference 6C-14). Several tests will be performed at a range of flow rates of 1 to 5 kg/sec (15.9 to 79.3 gpm) and at atmospheric pressure and ambient temperature. These flow rates are representative of the flow at recirculation conditions. The atmospheric pressure and ambient temperature result in a viscosity that is conservative with respect to pressure drop due to debris blockage. The test is initiated at clean conditions to establish a flow representative of post-LOCA recirculation conditions. The flow is injected at the fuel assembly inlet. Once a steady state has been established, the debris (described in 6C.3.1.9.3) is added to the system in a manner consistent with NRC guidance identified in Item 5(a) in Section 6.2.2, Appendix A of Reference 6C-15. The particulate debris is added first and in such a way that it does not coagulate and therefore would be able to block more of the potential fiber mat interstices. Next, fibrous debris is added. The fiber is also added slowly and in small amounts so as to ensure that the fibrous debris does not coagulate but remains as individual fibers. Once all of the particulate and fibrous debris has been added, chemical surrogate debris is added. The chemical surrogate material is added in batches and slowly so that it does not coagulate. As described in 6C.3.1.9.3, below,

the particulate debris surrogate is the same as was used in the PWROG fuel debris capture tests; silicon carbide having a dimension of 0.01 mm (10 microns) and the chemical surrogate debris is prepared using the method identified in WCAP-16530-NP-A (Reference 6C-16). The pressure drop across the inlet and the entire fuel assembly is monitored. In addition, the flow rate and coolant temperature are monitored. The test is run until all debris has been deposited in the system and a steady state pressure drop condition has been achieved. The above steps are consistent with the manner in which the PWROG fuel debris capture tests were performed.

6C.3.1.9.3 Debris Assumptions for Downstream Test

The test is conducted using conservative assumptions regarding the debris that would be present in the suppression pool following a LOCA. The following debris types are included: (1) Coatings, (2) Sludge, (3) Dust/Dirt, (4) Rust Flakes, (5) RMI shards, (6) Latent Fiber, and (7) Aluminum oxy-hydroxide as a surrogate for potential non-particulate zinc and aluminum corrosion products. As noted previously, the aluminum oxy-hydroxide used as a chemical surrogate is prepared using the method identified in WCAP-16530-NP-A (Reference 6C-16). The first four debris types are conservatively assumed to be particles smaller than 2.1 mm and are therefore all assumed to pass through the ECCS strainers. For the RMI shards and latent fiber, an assessment of the amount of the debris passing through the strainer is performed. Based on the size distribution of stainless steel RMI destroyed during jet testing (and shown in Figure 3-7 of NUREG/CR-6808), 4.3% of the RMI within the break zone of influence is assumed to be shards smaller than 2.1 mm, and therefore small enough to pass through the strainers. Latent fiber debris upstream of the strainers is conservatively assumed to be 1 ft^3 of destroyed fibrous insulation fibers (fines) and therefore is all assumed to pass through the strainers.

The fibrous debris used in the test is prepared in the same manner as was done for the PWR Owners Group tests so as to be of a similar size (length) distribution. The particulate debris surrogate used in the test is the same as the particulate debris surrogate used for the PWR Owners Group tests and is silicon carbide having a nominal dimension of about 0.01 mm (10 microns). This particulate debris is a surrogate for all forms of particulate debris that are assumed to pass through the strainers. The use of small particulate debris in the test is conservative because, should a debris bed form, the small particulate provides for a densely packed debris bed that maximizes potential pressure drop.

The total debris amounts that are the basis for the test are shown below:

Debris Type	Debris Assumed in Downstream Fuel Effects Test
Coatings	38 lbs. (Note 1)
Sludge	195 lbs
Dust/Dirt	150 lbs.
Rust Flakes	50 lbs.
Stainless Steel RMI	926 ft^2
Latent Fiber (fines)	1 ft^3
Aluminum Precipitate	0.11 lbs. (Note 2)
Zinc Precipitate	58.6 lbs. (Note 2)

Note 1: The URG value of 85 lbs of coatings is reduced by the mass of inorganic zinc primer (47 lbs.) that is accounted for by 58.6 lbs of zinc oxide precipitate

Note 2: Aluminum oxy-hydroxide is used as a surrogate for both zinc and aluminum corrosion products

Since there are 872 fuel assemblies in the core, the above debris amounts are reduced by a factor of 1/872. The test assembly debris load will be increased by a factor based upon the hot assembly power factor to account for the possibility of non-uniform debris deposition and non-uniform flow between assemblies.

6C.3.1.10 Summary

In summary, there is reasonable assurance that the downstream effects of material passing through the suction strainers will not adversely affect the fuel or other components. This conclusion is based upon the low potential for generating debris in the ABWR, the tortuous path for any debris to enter the wetwell from the drywell, the cleanup provisions for the water in the wetwell, the small quantity of conservatively assumed chemical debris, the small size of the holes in the suction strainers that filter out most debris, quarterly/periodic surveillance of HPCF, RHR, and RCIC systems which provides further assurance of the absence of debris which could affect their readiness for water injection capability, and diversity of injection points for ECCS into the core. Furthermore, additional case studies have shown that even a complete blockage of a fuel assembly can be accommodated because designed bypass flow around the fuel assembly inlet is sufficient by itself to provide fuel assembly cooling post LOCA. Finally, even if the fuel assembly inlet is blocked completely and there is minimal bypass flow, the HPCF is sufficient by itself to provide flow from above the core to keep the fuel from exceeding Appendix K limits. These studies demonstrate that the ABWR has substantial defense in depth.

The test described in Subsection 6C.3.1.9 will be performed on the fuel to be used in the initial fuel cycle to confirm that debris will not adversely affect the fuel.

6C.3.2 Evaluation of Downstream Effects on Major Components

The effects of debris passing through the strainers on downstream components such as pumps, valves, and heat exchangers will be evaluated using the methodology described in WCAP-16406-P "Evaluation of Downstream Sump Debris Effects in Support of GSI-191" along with the accompanying NRC Safety Evaluation. The WCAP includes equations for determining wear on surfaces exposed to the fluid stream due to various types of debris; e.g., paint chips or RMI shards. Methodologies for evaluating the potential for blockage of small clearances due to downstream debris are also included in the WCAP. The WCAP also identifies the acceptance criteria for these downstream components. The materials and clearances for the valves, pumps, and heat exchangers downstream of the ABWR ECCS suction strainers are essentially the same as the materials and clearances for the valves, pumps, and heat exchangers downstream of the PWR containment sump suction strainers. Therefore, the application of the WCAP methodology for the ABWR is appropriate.

The evaluation of the effects of bypassed debris on downstream components will be submitted as part of the overall downstream effects evaluation, which will be provided to the NRC at least 18 months prior to fuel load (COM 6C-1).

6C.4 Discussion Summary

In summary, the ABWR design includes the necessary provisions to prevent deleterious *debris from entering the ECCS and impairing the ability of the RCIC, HPCF, and RHR systems to perform their required post-accident functions. Specifically, the ABWR does the following:*

(1) The design is resistant to the transport of debris to the suppression pool.

(2) The suppression pool liner is stainless steel, which significantly reduces corrosion products.

(3) The SPCU system will provide early indication of any potential problem. Low SPCU pump suction pressure can provide early indication of debris present in the suppression pool and permit the plant operator to take appropriate corrective action.

(4) The SPCU System operation will maintain suppression pool cleanliness.

(5) Visual inspection of the suction strainers is performed each refueling outage.

(6) ~~*(5)*~~ *The equipment installed in the drywell and wetwell minimize the potential for generation of debris.*

(7) ~~*The ECCS suction strainers*~~The cassette-type ECCS strainers *meet the current regulatory requirements unlike the strainers at the incident plants.*

~~*(7) The RHR suction strainers will apply an additional factor of 3 design margins.*~~

(8) Plant housekeeping and Foreign Material Exclusion (FME) procedures assure pool cleanliness prior to plant operation and over plant life such that no significant debris is present in the suppression pool or upper drywell.

6C.5 Strainer Sizing Analysis Summary

~~A preliminary analysis was performed to assure~~ The strainer sizing analysis assures that the above requirements ~~could be~~ are satisfied using strainers compatible with the suppression pool design as shown by Figure 1.2-13i. The following summarizes ~~the results, which indicate strainer sizes that are acceptable within the suppression pool design constraints.~~the strainer sizing analysis.

Each loop of an ECCS system has a ~~single~~pair of suppression pool suction strainer configured in a T shape with ~~a screen region~~the strainers at the two ends of the T cross member. Analysis determined the area of each ~~screen region~~strainer. Thus, RHR with three loops has six ~~screen regions~~strainers. The HPCF with two loops has four ~~screen regions~~strainers, and the RCIC has two ~~screen regions~~strainers. ~~The characteristic dimension given for the screens in the results below indicates a surface area consisting of a circle with a diameter of the dimension plus a cylinder with a diameter and length of the dimension.~~The characteristic dimensions to calculate a surface area for cassette type strainer are given as follows.

(1) Depth of filter pocket

(2) Width of filter pocket

(3) Length of strainer

(4) Diameter of strainer

By the requirements above, all of the debris postulated to be in the suppression pool deposits on the strainers. The distribution of debris volume to the strainer regions was determined as a fraction of the loop flow splits based on runout flow. Debris on the screen creates a pressure drop as predicted by ~~NUREG-0897~~NUREG/CR-6224 and NUREG/CR-6808, which is referenced by R.G. 1.82. ~~The equation for NUKON™ insulation on page 3-59 of NUREG-0897 was used for this analysis. The NUKON™ debris created pressure drop equation is a function of the thickness of debris on the screen (which is a function of debris volume), the velocity of fluid passing through the screen (runout flow used), and the screen area.~~ Pressure drop caused by the mixed particulates and fiber bed is calculated by the equation shown on NUREG/CR-6224, Appendix B. The following parameters play an important part in the function of this equation for pressure drop caused by mixed bed.

(1) Thickness of debris on screen

(2) Characteristic shape of debris type

(3) Rate of particulate mass to fiber debris mass

(4) Velocity of fluid passing through the screen (runout flow used)

Pressure drop is calculated by the equation shown on NUREG/CR-6808 for RMI. *The debris created pressure drop was applied in an equation as follows; the static head at the pump inlet is equal to the hydraulic losses through the pipe and fittings, plus the pressure drop through the debris on the strainers, plus the hydraulic loss through the unplugged strainer, ~~plus a margin equal to approximately 10% of the static head at the pump inlet,~~ and plus the required NPSH. The static head takes into account the suppression pool water level determined by the draw down calculated as applicable for a main steam line break scenario. ~~A summary provided in Table 6C-1, and a summary of the analysis results is provided in Table 6C-2.~~*

By making realistic assumptions, the following additional conservatisms are likely to occur, but they were not applied in the analysis. No credit in water inventory was taken for water additions from feedwater flow or flow from the condensate storage tank as injected by RCIC or HPCF. Also, for the long term cooling condition, when suppression pool cooling is used instead of the low pressure flooder mode (LPFL), the RHR flow rate decreases from runout (1130 m^3/h) to rated flow (954 m^3/h), which reduces the pressure drop across the debris.

In summary, the analytical process for sizing of the strainers is based on debris generation, debris transport and a head loss evaluation in accordance with the Utility Resolution Guidance (NEDO-32686-A), supplemented by an assumption of latent fiber. This analytical method will be used to implement the ITAAC as shown in Tier 1, ITAAC 2.4.1.4.c, 2.4.2.3.g, and 2.4.4.3.j.

6C.5.1 ECCS Suction Strainer Sizing Design Basis

The ECCS suction strainer design, which is described in Appendix 6C.2 and its associated references, is the same as the design for the Reference Japanese ABWR (see References 6C-11, 6C-12 and 6C-13), and the strainers will have at least the same area as the Reference Japanese ABWR strainers. Application of the Reference Japanese ABWR ECCS suction strainer design is conservative for the following reasons:

- The sizing of the Reference Japanese ABWR strainers is based on the methodology defined in the BWROG's Utility Resolution Guideline (URG) (Reference 6C-3).
- The Reference Japanese ABWR primary containment includes fibrous and calcium silicate thermal insulation, both of which are significant contributors to strainer head loss. The only type of thermal insulation allowed inside the primary containment is all stainless steel reflective metal insulation (RMI), which results in a much lower head loss across the ECCS suction strainers.

The application of the reference Japanese ABWR strainer head loss analysis is less conservative in one area. Section 6C.3 and Regulatory Guide 1.82, Rev. 3 state that the head loss calculations are to be performed at pump runout flow rate conditions. For the reference Japanese ABWR, these calculations were performed at design flow rate conditions. Because pump runout flow rate is greater than design flow rate and strainer head loss is proportional to flow rate, a higher suction strainer head loss is calculated

at runout flow rate. However this higher head loss is more than compensated by other changes made compared with the reference Japanese ABWR, including the removal of fibrous and calcium silicate insulation materials from the containment. Consequently, the use of the reference Japanese ABWR for the licensing basis for is conservative. This evaluation is documented in Reference 6C-13.

The expected cleanliness of the ABWR primary containment is supported by operating experience from one of the oldest Japanese ABWRs. Specifically, an inspection at this plant recovered items from the suppression pool, including tape fragments, plastic sheet fragments, and short segments of rope. None of these types of items were reported in the drywell as a result of that inspection, and no such items were reported in either the drywell or suppression pool during the previous inspection 2 years earlier. To account for the potential that there might be a few similar items inadvertently left in the primary containment during the life of the plant, it is assumed that 2 filter pockets on each ECCS strainer are completely blocked by miscellaneous latent debris.

6C.6 References

6C-1 Debris Plugging of Emergency Core Cooling Suction Strainers, NRC Bulletin No. 93-02, May 11, 1993.

6C-2 Water Sources for Long-Term Recirculation Cooling Following a Loss-of-Coolant Accident, NRC Reg. Guide 1.82, Revision 3.

6C-3 Utility Resolution Guidance for ECCS Suction Strainer Blockage, NEDO-32686-A.

6C-4 Parametric Study of Potential for BWR ECCS strainer Blockage Due to LOCA Generated Debris, NUREG/CR-6224.

6C-5 Knowledge Base for Effect of debris on Pressurised Water Reacter Emergency Core Cooling Sump Performance, NUREG/CR-6808

6C-6 Not Used.

6C-7 NRC Generic Letter (GL) 97-04, Assurance of Sufficient Net Positive Suction Head for Emergency Core Cooling and Containment Heat Removal Pumps, dated October 7, 1997

6C-8 NRC Generic Letter (GL) 98-04, Potential for Degradation of the Emergency Core Cooling System and the Containment Spray System After a Loss-Of-Coolant Accident because of Construction and Protective Coating Deficiencies and Foreign Material in Containment, dated July 14, 1998.

6C-9 Not Used.

6C-10 Not Used.

6C-11 The Evaluation Report for Net Positive Suction Head of Pump in Emergency Core Cooling System, STP Doc. U7-RHR-M-RPT-DESN-0001, Rev. B, February 10, 2010.

6C-12 The Supplementary Document for the Head Loss Evaluation Report of Japanese ABWR ECCS Suction Strainer, STP Doc. U7-RHR-M-RPT-DESN-0002, Rev. C, February 10, 2010.

6C-13 The Evaluation Example of the Head Loss of the ECCS Suction Strainer and Pipe in the ECCS Pump Run-out Flow Condition, STP Doc. U7-RHR-M-RPT-DESN-0003, Rev. A, May 27, 2009.

6C-14 Letter from W. H. Ruland (NRC) to A. R. Pietrangelo (NEI), 'Revised Guidance for Review of Final Licensee Responses to Generic Letter 2004-02, "Potential Impact of Debris Blockage on Emergency Recirculation During Design Basis Accidents at Pressurized-Water Reactors," dated March 28, 2008, ADAMS Accession Number ML080230112.

6C-15 Enclosure 1 to ML080230112, "NRC Staff Review Guidance Regarding Generic Letter 2004-02 Closure in the Area of Strainer Head Loss and Vortexing," dated March 2008, ADAMS Accession Number ML080230038.

6C-16 WCAP-16530-NP-A, "Evaluation of Post-Accident Chemical Effects in Containment Sump Fluids to Support GSI-191," Westinghouse Electric Company LLC, dated March 2008.

Table 6C-1 ~~Debris Analysis Input Parameters~~Not Used

~~Estimated debris created by a main steam line break~~	~~2.6 m^3~~
~~RHR runout flow (Figure 5.4-11, note 13)~~	~~1130 m^3/h~~
~~HPCF runout flow (Table 6.3-8)~~	~~890 m^3/h~~
~~RCIC controlled constant flow (Table 5.4-2)~~	~~182 m^3/h~~
~~Debris on RHR screen region, 3 RHR loops operating~~	~~0.434 m^3~~
~~Debris on HPCF screen region~~	~~0.369 m^3~~
~~Debris on RCIC screen region~~	~~0.097 m^3~~
~~RHR required NPSH (Table 6.3-9)~~	~~2.4 m~~
~~HPCF required NPSH (Table 6.3-8)~~	~~2.2 m~~
~~RCIC required NPSH (Table 5.4-2)~~	~~7.3 m~~
~~RHR pipe, fittings and unplugged strainer losses1~~	~~0.60 m~~
~~HPCF pipe, fittings and unplugged strainer losses*~~	~~0.51 m~~
~~RCIC pipe, fittings and unplugged strainer losses*~~	~~0.39 m~~
~~Suppression pool static head above pump suction~~	~~5.05 m~~

~~*] Calculated hydraulic losses*~~

~~Table 6C-2 Results of Analysis~~Not Used

~~RHR screen region area/characteristic dimension~~	~~5.66 m^2/1.20 m~~
~~HPCF screen region area/characteristic dimension~~	~~1.46 m^2/0.61 m~~
~~RCIC screen region area/characteristic dimension~~	~~0.27 m^2/0.26 m~~
~~Total ECCS screen region area~~	~~40.0 m^2~~

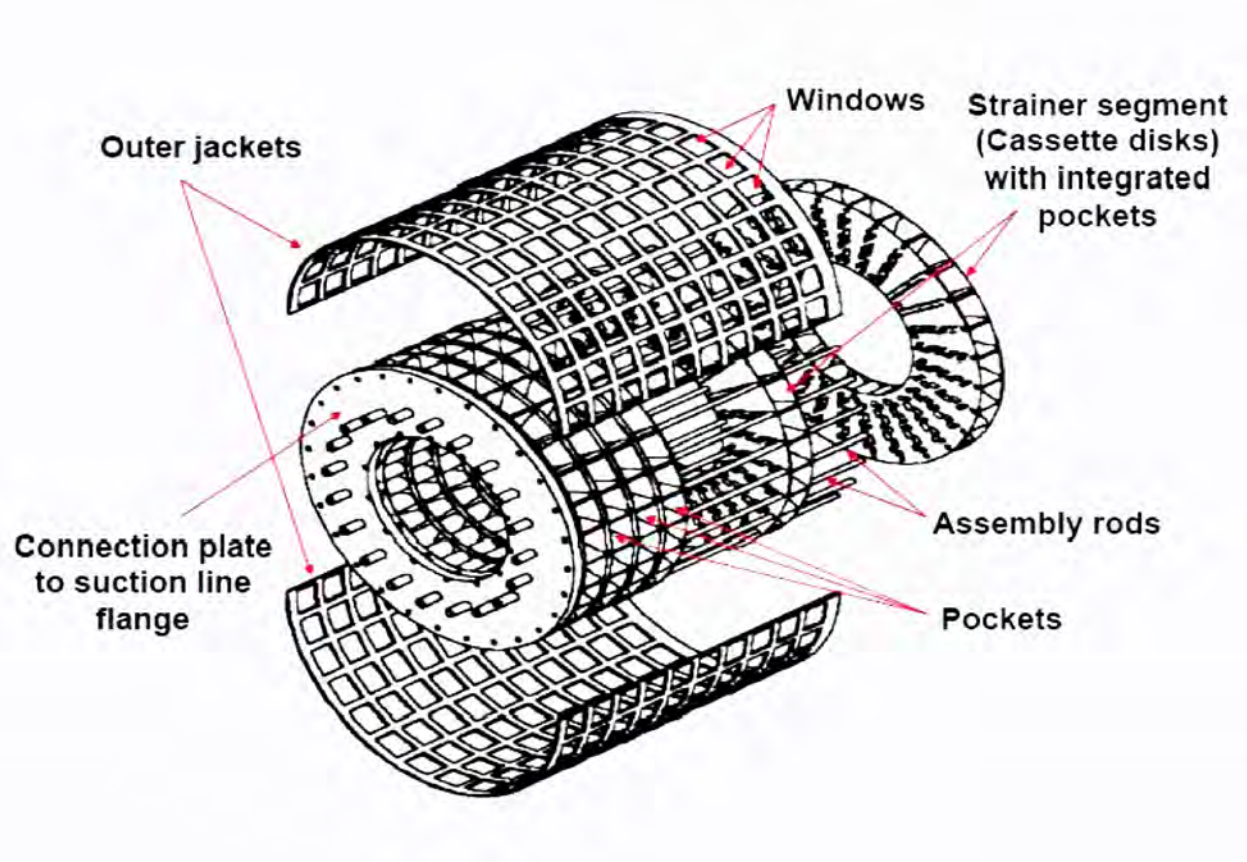

Figure 6C-1 Cassette Strainer Cutaway

6D HPCF Analysis Outlines

The information in this appendix of the reference ABWR DCD, including all subsections and figures, is incorporated by reference with one departure which corrects an editorial error.

6D.2.4 Low Pressure Injection Flow

STD DEP Admin

***Confirmation**: (Convert all terms to consistent units)*

$P_{727} = H_{727} + Hs + \cancel{70.68}\ \underline{0.69}\ MPa + margin$

6E Additional Bypass Leakage Considerations

The information in this appendix of the reference ABWR DCD, including all subsections, is incorporated by reference with no departures or supplements.

7.0 Instrumentation and Control Systems

7.1 Introduction

The information in this section of the reference ABWR DCD, including all subsections and tables, and figures, is incorporated by reference with the following departures and supplements.

STD DEP T1 2.3-1

STD DEP T1 2.14-1 (Table 7.1-1)

STD DEP T1 3.4-1 (Figure 7.1-1, 7.1-2)

STD DEP 1.8-1 (Table 7.1-2)

STD DEP 7.1-1

STD DEP 7.1-2

STD DEP 7.4-1

STD DEP Admin (Table 7.1-1)

7.1.1 Identification of Safety-Related Systems

Refer to Subsections 7.1S.1 and 7.1S.2 for terminology related to the Reactor Trip and Isolation System (RTIS), the Neutron Monitoring System (NMS), and the Engineered Safety Features Logic and Control Sytem (ELCS).

7.1.1.1 General

STD DEP T1 3.4-1

Each individual safety-related system utilizes redundant channels of safety-related instruments for initiating safety action. The automatic decision making and trip logic functions associated with the safety action of several safety-related nuclear steam supply systems (NSSS) are accomplished by ~~a four-division correlated and separated protection logic complex called~~ the safety system logic and control (SSLC). The SSLC includes multiple redundant divisions, which are separated from each other. The SSLC has four redundant divisions of sensors. Each division of sensors has a corresponding division that determines the trip status of the safety functions relative to the safety function setpoint. The SSLC has four redundant divisions for all actuation functions except for the engineered safety features. The engineered safety features have three divisions, corresponding to the maximum redundancy of the engineered safety features actuated components. Some engineered safety features functions are less than three-fold redundant and are assigned to the appropriate set of redundant divisions. *The SSLC multi-divisional complex includes divisionally separate control room and other panels which house the SSLC equipment for controlling the various safety function actuation devices. The SSLC receives input signals from the redundant*

channels of instrumentation in the safety-related system, and uses the input information to perform logic functions in making decisions for safety actions.

Sensor signals are hardwired to the RTIS. These sensors are divisionally separated.

Divisional separation is applied to the Essential Communication Functions (ECFs) of ELCS, which provides communication for the sensor input to the logic units and for the logic output to the system actuators (actuated devices such as pump motors and motor-operated valves).

~~*Divisional separation is also applied to the essential multiplexing system (EMS)*~~ ~~*, which provides data highways for the sensor input to the logic units and for the logic output to the system actuators (actuated devices such as pump motors and motor-operated valves).*~~ *Systems which utilize the SSLC* ~~are~~ include*: (1) Reactor Protection (trip) System; (2) High Pressure Core Flooder System; (3) Residual Heat Removal System; (4) Automatic Depressurization System; (5) Leak Detection and Isolation System; (6) Suppression Pool* Temperature *Monitoring System; and (7) Reactor Core Isolation Cooling System. The equipment arrangement for these systems and other supporting systems is shown in Figure 7.1-2.*

7.1.1.3 Engineered Safety Features (ESF) Systems

7.1.1.3.9 HVAC Emergency Cooling Water System

STD DEP Admin

Automatic instrumentation and control is provided to assure that adequate cooling is provided for the main control room, the control building essential electrical equipment rooms, and the ~~*diesel generator cooling coils*~~ reactor building essential electrical equipment rooms.

7.1.1.4 Safe Shutdown Systems

7.1.1.4.1 Alternate Rod Insertion Function (ARI)

STD DEP 7.4-1

Though not required for safety, instrumentation and controls for the ARI provide a means to mitigate the consequences of anticipated transient without scram (ATWS) events. ~~*Upon receipt of an initiation signal (based on either high reactor dome pressure or low reactor water level from the Recirculation Flow Control System), the RCIS System controls the fine motion control rod drive (FMCRD) motors such that all operable control rods are driven to their full in position.*~~ The Recirculation Flow Control System (upon detection of either high reactor dome pressure, low reactor water level or Manual ARI initiation) activates opening signals for the ARI valves of the Control Rod Drive (CRD) System (i.e., for backup hydraulic insertion of the control rods) and activates ARI initiation command signals to the Rod Control and Information System (i.e., for electric motor insertion of all operable control rods to the full-in position). *This provides a method, diverse from* ~~*the hydraulic control units (HCUs), for scramming the*~~

~~reactor.~~ the SCRAM function of the Reactor Protection System and associated CRD hydraulic control units (HCUs), for achieving insertion of control rods.

7.1.1.6 Other Safety-Related Systems

7.1.1.6.1 Neutron Monitoring System (NMS)

STD DEP Admin

(1) Startup Range Neutron Monitoring (SRNM)

(2) Local Power Range Monitoring (LPRM)

(3) Average Power Range Monitoring (APRM)

(4) Automated Traversing Incore Probe (ATIP)

(5) Multi-channel Rod Block Monitoring (MRBM)

The SRNM, LPRM, and APRM are the only safety-related subsystems of NMS.

7.1.1.6.2 Process Radiation Monitoring System (PRM~~S~~) Instrumentation and Controls

STD DEP Admin

The Process Radiation Monitoring System (PRM~~S~~) monitors the main steamlines, vent discharges and all liquid and gaseous effluent streams which may contain radioactive materials. Main control room display, recording and alarm capability is provided along with automatic trip inputs that initiate protection functions.

7.1.1.6.6 Containment Atmospheric Monitoring System

STD DEP T1 2.14-1

The Containment Atmospheric Monitoring System (CAMS) measures and records radiation levels and the oxygen/hydrogen concentration in the primary containment under post-accident conditions. It is designed to operate continuously and is automatically put in service upon detection of LOCA conditions. The only CAMS safety-related function is measuring radiation levels in primary containment.

7.1.2 Identification of Safety Criteria

7.1.2.1.4 Instrument Errors

STD DEP 7.1-1

The design considers instrument drift, testability, and repeatability in the selection of instrumentation and controls and in the determination of setpoints. Adequate margin between safety limits and instrument setpoints is provided to allow for instrument error

(safety limits, setpoints, and margins are ~~provided in Chapter 16~~ determined in accordance with the instrument setpoint methodology document described in Section 16.5.5.2.11, Setpoint Control Program*) The amount of instrument error is determined by test and experience. The setpoint is selected based on the known error. The recommended test frequency is greater on instrumentation that demonstrates a stronger tendency to drift.*

7.1.2.1.4.1 Safety System Setpoints

STD DEP 7.1-1

The methods for calculating *safety system setpoints are ~~listed~~*determined *in* accordance with *the ~~Chapter 16~~* instrument setpoint methodology document described in Section 16.5.5.2.11, Setpoint Control Program, *for each safety system. The settings are determined based on operating experience and conservative analyses. The settings are high enough to preclude inadvertent initiation of the safety action but low enough to assure that significant margin is maintained between the actual setting and the limiting safety system settings. Instrument drift, setting error, and repeatability are considered in the setpoint determination (Subsection 7.1.2.1.4). The margin between the limiting safety system settings and the actual safety limits includes consideration of the maximum credible transient in the process being measured.*

7.1.2.1.6 [Protection System Inservice Testability

STD DEP T1 3.4-1

The ~~RPS~~ RTIS *and ~~ESF~~*ELCS *Systems can be tested during reactor operation~~ by six separate tests~~. The first five tests are primarily manual tests and, although each individually is a partial test, combined with the sixth test they constitute a complete system test. The sixth test is the~~self~~ test of the safety system logic and control which~~automatically~~ tests the complete system excluding sensors and actuators.*

(4) The fourth test checks calibration of analog sensor inputs ~~at the analog inputs of the remote multiplexing units~~. With a division-of-sensors bypass in place, calibrated, variable ~~ramp~~ signals are injected in place of the sensor signals and monitored ~~at the SSLC control room panels~~ for linearity, accuracy, fault response, and downscale and upscale trip response. ~~The test signals are adjustable manually from the control room and also are capable of performing an automatic sequence of events.~~ When surveillance testing during plant shutdown, trip coincidence and actuated device operation can be verified by simultaneous trip tests of coincident channels. Pressure transmitters and level transmitters are located on their respective local panels. The transmitters can be individually valved out of service and subjected to test pressure to verify operability of the transmitters as well as verification of calibration range. To gain access to the field controls on each transmitter, a cover plate or sealing device ~~must~~ may *be removed. Access to the field controls is granted only to qualified personnel for the purpose of testing or calibration adjustments.*

(6) *The sixth test ~~is an integrated self-test provision built into the microprocessors within the SSLC. It~~ consists of an online, continuously operating, self~~-diagnostic~~* diagnostics.*~~monitoring network,~~ and ~~an~~ offline ~~semi-automatic (operator initiated, but automatic to completion),~~ end-to-end surveillance program.* Cross channel comparison of sensor inputs is performed by plant computer functions. *Both online and offline functions operate independently within each of the four divisions. There are no multi-divisional interconnections associated with self~~-testing~~* diagnostics*.*

The primary purpose of the self~~-test~~ diagnostic function *is to improve the availability of the SSLC by optimizing the time to detect and determine the location of a failure in the functional system. It is not intended that the self~~-test~~* diagnostic function *eliminate the need for the other five manual tests. However, most faults are detected more quickly than with manual testing alone.*

The self~~-test~~ diagnostic *function is classified as safety-related. Its hardware and software are an integral part of the SSLC and, as such, are qualified to Class 1E standards.*

The hierarchy of test capability is provided to ensure maximum coverage of all ~~EMS~~ ECF*/SSLC functions, including logic functions and data communication links. Testing shall include:*

(a) *Online Continuous Testing*

*A self-diagnostic program monitors each signal processing module from input to output.~~ Testing is automatic and~~*Diagnostic testing *is performed ~~periodically~~*as part of the online functions *during normal operation. Tests will verify the basic integrity of each card or module~~ on the microprocessor bus~~. All operations are part of normal data processing intervals and will not affect system response to incoming trip or initiation signals. ~~Automatic initiation signals from plant sensors will override an automatic test sequence and perform the required safety function~~. Process or logic signals are not changed as a result of self~~-test~~* diagnostic *functions.*

The self-diagnostic function does not degrade system reliability. Indications of test results (pass, fail) is provided.

*Self-diagnosis includes monitoring of overall program flow, ~~reasonableness of process variables, RAM and PROM~~*and processor memory *condition~~, and device interlock logic~~. Testing includes continuous error checking of all transmitted and received data~~ on the serial data links of each SSLC controller~~; for example, error checking by parity check, checksum, or cyclic redundancy checking (CRC) techniques.*

~~*A fault is considered the discrepancy between an expected output of a permissive circuit and the existing present state.*~~

*Actuation of the trip function is not performed during this test. The self-~~test~~*diagnostic *function is capable of detecting ~~and logging~~ intermittent failures without stopping system operation. Normal surveillance by plant personnel will identify these failures, via a diagnostic display, for preventive maintenance.*

Self~~-test~~ diagnostic *failures (except intermittent failures) are annunciated to the operator at the main control room console and logged by the ~~process~~* plant *computer* functions (PCF)*. Faults are identified to the replacement board or module level and ~~positively~~* are generally *indicated at the failed unit.*

*The ~~continuous surveillance monitoring~~*self-diagnostic function *also includes power supply voltage levels~~, card out-of-file interlocks, and battery voltage levels on battery-backed memory cards (if used). Out-of-tolerance conditions will result in an inoperative (out-ofservice) condition for that particular system function.~~*and verification of the module configuration.

~~*Automatic system self-testing occurs during a portion of every periodic transmission period of the data communication network. Since exhaustive tests cannot be performed during any one transmission interval, the test software is written so that sufficient overlap coverage is provided to prove system performance during tests of portions of the circuitry, as allowed in IEEE 338.*~~

The ~~Essential Multiplexing System (EMS)~~ Essential Communication Function (ECF) *is included in the continuous, automatic self~~-test~~ diagnostic function. Faults at the ~~Remote Multiplexing Units (RMUs)~~* Remote Digital Logic Controllers (RDLCs) *are alarmed in the main control room. ~~Since the EMS~~* ECF *is dual in each division~~, self-test supports automatic reconfiguration or bypass of portions of EMS after a detected fault, such that the least effect on system availability occurs.~~* A fault on one of the two communication paths will not prevent system operation through the unfaulted path.

(b) *Offline ~~Semi-automatic~~ End-to-End (Sensor Input to Trip Actuator) Testing*

The more complete, manually-initiated ~~internal self-~~test is available when a unit is offline for surveillance or maintenance testing. This test exercises the trip outputs of the SSLC logic ~~processors~~. The channel containing the ~~processors~~ logic *will be bypassed during testing.*

A fault is considered the inability to open or close any control circuit.

*~~Self-test~~*Test *failures are displayed on a front panel readout device or other diagnostic unit.*

*To reduce operator burden and decrease outage time, a ~~surveillance test controller (STC)~~*maintenance and test panel (MTP) *is provided as a dedicated instrument in each division of ~~SSLC~~* ELCS. *The ~~STC performs semi-automatic (operator-initiated)~~*MTP is used for *testing of ~~SSLC~~* ELCS *functional logic, including trip, initiation, and interlock logic. Test coverage includes verification of correct operation of the following capabilities, as defined in each system IBD:*

(i) Each 2/4 coincident logic function.

(ii) Serial and parallel I/O, including manual control switches, limit switches, and other contact closures.

~~(iii) The 1/N trip selection function.~~

~~(iv)~~ (iii) *Interlock logic for each valve or pump.*

A separate test sequence for each safety system is operator-selectable~~; testing will proceed automatically to conclusion after initiation by the operator~~. Surveillance testing is performed in one division at a time. The surveillance test frequency is given in Chapter 16.

~~The STC injects test patterns through the EMS communications links to the RMUs. It then tests the RMUs' ability to format and transmit sensor data through and across the EMS/SSLC interface, in the prescribed time, to the load drivers. Under the proper bypass conditions, or with the reactor shut down, the load drivers themselves may be actuated.~~

7.1.2.4 Safe Shutdown Systems—Instrumentation and Controls

7.1.2.4.1 Alternate Rod Insertion Function (ARI)—Instrumentation and Controls

STD DEP 7.1-2

STD DEP 7.4-1

(2) Non-safety-Related Design Bases

The general functional requirements of the instrumentation and controls of the ARI function are to:

(a) Provide alternate and diverse method for inserting control rods using *~~fine motion control rod drive (FMCRD) electric motors.~~* the ARI valves

of the Control Rod Drive System or using the ARI motor run-in function of the Rod Control and Information System.

(b) Provide for automatic and manual operation of the ~~system~~ function*.*

(c) Provide assurance that the ARI shall be highly reliable and functional in spite of a single failure.

(d) Provide assurance that the ARI shall operate when necessary ~~(FMCRD motors shall be connected to the emergency diesel generators).~~ (e.g., the stepping motor driver modules (SMDMs), which control the fine motion control rod drive (FMCRD) motors, shall derive their input power from a power bus that can automatically receive power from an emergency diesel generator, if necessary).

(e) Mitigate the consequences of anticipated transient without scram (ATWS) events.

7.1.2.4.3 RHR—Reactor Shutdown Cooling Mode—Instrumentation and Controls

STD DEP Admin

(1) Safety Design Bases

*(c) Indicate performance of the shutdown cooling system by ~~main control room~~*separate *instrumentation and controls in the* main control room and in the *remote shutdown panel.*

7.1.2.6 Other Safety-Related Systems

7.1.2.6.1 Neutron Monitoring System (NMS)—Instrumentation and Controls

7.1.2.6.1.1 Startup Range Neutron Monitoring (SRNM) Subsystem

STD DEP 7.1-2

(1) Safety Design Bases

General Functional Requirements:

(d) The SRNM subsystem will provide Anticipated Transient Without Scram (ATWS) permissive signals to the ESF Logic and Control System (ELCS).

7.1.2.6.1.4 Average Power Range Monitor (APRM) Subsystem

STD DEP 7.1-2

(1) Safety Design Bases

General Functional Requirements:

The general functional requirements are that, under the worst permitted input LPRM bypass conditions, the APRM Subsystem shall be capable of generating a trip signal in response to average neutron flux increases in time to prevent fuel damage. The APRM generator trip functions with trip inputs to the RPS also include: simulated thermal power trip, APRM inoperative trip, core flow rapid decrease trip, and core power oscillation trip of the oscillation power range monitor (OPRM). The OPRM design basis is to provide a trip to prevent growing core flux oscillation to prevent thermal limit violation, while discriminating against false signals from other signal fluctuations not related to core instability. The independence and redundancy incorporated into the design of the APRM Subsystem shall be consistent with the safety design bases of the Reactor Protection System (RPS). The RPS design bases are discussed in Subsection 7.1.2.2.

The APRM subsystem also provides Anticipated Transient Without Scram (ATWS) permissive signals to the ESF Logic and Control System (ELCS) as described in Subsection 7.6.1.1.2.2(5).

7.1.2.6.2 Process Radiation Monitoring System

STD DEP T1 2.3-1

STD DEP 7.1-1

(1) Safety Design Bases

General Functional Requirements:

(d) Not Used ~~*Provide channel trip inputs to the RPS and LDS on high radiation in the MSL tunnel area. If the protection system logic is satisfied, the following shall be initiated:*~~

~~*(i) Reactor scram.*~~

~~*(ii) Closure of the main steamline isolation valves.*~~

~~*(iii) Shutdown of the mechanical vacuum pump and closure of the mechanical pump discharge line isolation valve.*~~

(2) Non-safety-Related Design Bases

(e) Provide alarm annunciation signals to the main control room if alarm or trip levels are reached or the radiation monitoring subsystem becomes inoperative, and provide input to the offgas system when the radioactive gas concentration in the offgas system discharge is at or in excess of the restrictive concentration limit derived from ~~*Technical Specification*~~ the Offsite Dose Calculation Manual *release rate limits and that discharge from the offgas system must be terminated.*

7.1.2.6.6 Containment Atmospheric Monitoring (CAM) Systems

STD DEP T1 2.14-1

(1) Safety Design Bases

General Functional Requirements:

~~*Monitor the atmosphere in the inerted primary containment for radiation levels and for concentration of hydrogen and oxygen gases, primarily during post-accident conditions. Monitoring shall be provided by two independent safety-related divisional subsystems.*~~

Monitor continuously the radiation environment in the drywell and suppression chamber during reactor operation and under post-accident conditions. Monitoring shall be provided by two independent safety-related divisional subsystems of radiation monitors.

~~*Sample and monitor the oxygen and hydrogen concentration levels in the drywell and suppression chamber under post-accident conditions, and also when required during reactor operation. The LOCA signal (low reactor water level or high drywell pressure) shall activate the system and place it into service to monitor the gaseous buildup in the primary containment following an accident.*~~

(2) Non-Safety-Related Design Bases

Separate hydrogen and oxygen gas calibration sources shall be provided for each CAM Subsystem for periodic calibration of the gas analyzers and monitors.

Monitor the atmosphere in the inerted primary containment for concentration of hydrogen and oxygen gases, primarily during post-accident conditions. Monitoring shall be provided by two independent and redundant nonsafety-related subsystems of Oxygen/Hydrogen Monitors.

Sample and monitor the oxygen and hydrogen concentration levels in the drywell and suppression chamber under post-accident conditions, and also when required during reactor operation. The loss of coolant accident (LOCA) signal (low reactor water level or high drywell pressure) shall activate the system and place it into service to monitor the gaseous buildup in the primary containment following an accident.

7.1.2.8 Independence of Safety-Related Systems

STD DEP Admin

(See Subsection~~s~~ ~~8.3.1.3 and 8.3.1.4~~ 8.3.3.6.2.*)*

7.1.2.9 Conformance to Regulatory Requirements

7.1.2.9.1 Regulation 10CFR50.55a

STD DEP 1.8-1

The only portion of 10CFR50.55a applicable to the I&C equipment is 10CFR50.55a(h), which requires the application of IEEE-~~279~~603 for protection systems (Subsection 7.1.2.11.1).

7.1.2.10 Conformance to Regulatory Guides

7.1.2.10.2 Regulatory Guide 1.47—Bypassed and Inoperable Status Indication for Nuclear Power Plant Safety Systems

STD DEP 1.8-1

Bypass indications are designed to satisfy the requirement of IEEE ~~279~~603, Paragraph ~~4.13~~5.8.3, Regulatory Guide 1.47~~,~~ and BTP ICSB 21. Regulatory Guide 1.47 requires designs to satisfy Paragraph 4.13 of IEEE 279, which has been subsequently superceded by Paragraph 5.8.3 of IEEE 603. Bypass indications also satisfy these requirements. *Additional information may be found in the system detail descriptions in Sections 7.2, 7.3, 7.4 and 7.6. The design of the bypass indications allows testing during normal operation and is used to supplement administrative procedures by providing indications of safety systems status.*

7.1.2.10.9 Regulatory Guide 1.105—Instrument Setpoints

STD DEP 7.1-1

The I&C systems are consistent with the requirements of Regulatory Guide 1.105. ~~The trip setpoint (instrument setpoint) allowance value (Tech Spec limit) and the analytical or design basis limit are all contained in the Technical Specifications (Chapter 16).~~ Safety limits, setpoints, and margins are determined in accordance with the instrument setpoint methodology document in Section 16.5.5.2.11, Setpoint Control Program. *~~These parameters are all appropriately separated from each other based on instrument accuracy, calibration capability and design drift (estimated) allowance data. The setpoints are within the instrument best accuracy range. The established setpoints provide margin to satisfy both safety requirements and plant availability objectives.~~*

7.1.2.11 Conformance to Industry Standards

STD DEP 1.8-1

7.1.2.11.1 ~~IEEE-279—Criteria for Protection Systems for Nuclear Power Generating Stations~~ IEEE-603—Standard Criteria for Safety Systems for Nuclear Power Generating Stations

All safety related systems are designed to meet the requirements of IEEE-~~279~~603. Clarifications of any of the provisions are discussed for the applicable systems in the analysis portions of Sections 7.2, 7.3, 7.4, ~~and~~ 7.6, and 7.9S.

IEEE-603, Section 4, Safety System Designation

A specific basis is established to determine the design of each safety-related I&C system. This basis evolved from the identification of Design Basis Events (DBE) that are postulated in Chapter 15. The plant operating conditions and the safety analysis acceptance criteria applicable for each event are shown in Chapter 15. Credited systems, interlocks, and functions are evaluated for each DBE. Information provided for each design base item enables the detailed design of the system to be carried out. The number of sensors and their location, including spatial effects, is determined during this design basis analysis. The identification of variables are derived from the DBEs as well as the requirements for varied manual initiation and control of protective functions. Safety system design basis descriptions are included in the various sections of this Chapter.

IEEE-603, Sections 5, 6 and 7, Safety System Criteria

The safety-related systems are designed to maintain plant parameters within acceptable limits that are established by design basis events. This is done with precision and reliability meeting the requirements of IEEE-603. The scope of IEEE-603 includes safety-related I&C systems and is described in more detail in Sections 7.2 through 7.6 and 7.9S. The safety-related I&C design conforms with IEEE-603 and has been qualified to demonstrate that all required performance requirements are met. Nonsafety-related systems generally are not required to meet any of the requirements of IEEE-603 with the exception of their independence from safety-related systems. The STP 3&4 safety-related I&C design descriptions related to IEEE-603, Sections 5, 6, and 7 requirements are provided below.

(1) Paragraph 5.1, Single Failure: The safety-related I&C systems are designed to ensure that safety-related functions required for design basis events (DBE) are performed in the presence of: (a) single detectable failure within safety-related systems concurrent with all non-detectable failures; (b) failures caused by the single failure; and (c) failures and spurious system actions that cause, or are caused by the design basis event, requiring the safety-related functions as identified in the applicable failure modes and effects analysis (FMEA).

(2) Paragraphs 5.2 & 7.3, Completion of Protective Actions: The safety-related I&C systems are designed so that a) once initiated (automatically or manually), the intended sequence of the safety-related functions of the execution features continue until completion, and b) after completion, deliberate operator action is required to return the safety-related system to normal.

(3) Paragraph 5.3, Quality: A: safety-related I&C equipment is provided under the 10 CFR PArt 50 Appendix B quality program. This satisfies all applicable requirements of the following: 1) 10 CFR Part 50 Appendix B and 2) ANSI/ASME NQA-1. The safety-related digital I&C software and/or firmware conform with the quality requirements of IEEE 7-4.3.2.

(4) Paragraph 5.4, Equipment Qualification: The safety-related I&C equipment is designed to meet its functional requirements over the range of environmental

conditions for the area in which it is located. The equipment is designed to meet the equipment qualification requirements set forth by this criterion.

(5) Paragraph 5.5, System Integrity: The safety-related I&C systems are designed to demonstrate that the safety system performance is adequate to ensure completion of protective actions, over a range of transient and steady state conditions, as enumerated in the design basis.

(6) Paragraph 5.6, Independence: For the safety-related I&C systems, there is physical, electrical, and commmunication independence between redundant portions of safety-related systems and between safety-related systems and nonsafety-related systems, as discussed in the applicable Sections.

(7) Paragraph 5.7, Capability for Test & Calibration: The safety-related I&C systems are designed with the capability to have their equipment tested and calibrated while retaining their capability to accomplish their safety functions.

(8) Paragraph 5.8, Information Displays: The information display design is discussed in Chapter 18. This design process includes the necessary steps to ensure compliance with regulatory requirements and the guidance provided in RG 1.47 for bypass and inoperable status indication and in RG 1.97 for accident monitoring instrumentation as discussed in Section 7.5.

(9) Paragraph 5.9, Control of Access: The safety-related I&C systems have features that facilitate the administrative control of access to safety-related system equipment.

(10) Paragraph 5.10, Repair: The safety-related analog and digital based I&C systems are designed to allow the timely recognition of malfunctioning equipment location to allow the replacement, repair and/or adjustment. Self-diagnostic functions and periodic testing will identify and locate the failure. Individual bypassing allows the failed equipment to be replaced or repaired on-line without affecting the protection function.

(11) Paragraph 5.11, Identification: Safety-related I&C equipment conforms with the identification requirements of this criterion. Safety-related equipment is distinctly marked for each redundant portion of a system with identifying markings. Hardware components or equipment units have an identification label or a nameplate. For digital platforms, versions of computer hardware, software and/or firmware are distinctly identified. Proper configuration management plans are implemented as a way to formalize this identification process.

(12) Paragraph 5.12, Auxiliary Features: STP 3&4 safety-related I&C system auxiliary supporting features satisfy the requirements of this criterion where applicable. For example, power supply and HVAC are key auxiliary supporting systems that satisfy the applicable requirements of IEEE-603. Other key auxiliary features are designed such that these components will not degrade the safety-related I&C systems below an acceptable level.

(13) Paragraph 5.13, Multi Unit Stations: The safety-related I&C systems meet the requirements of GDC 5, Sharing of structures, systems and components. The

capability to simultaneously perform required safety functions in both Units is not impaired by interactions between Units.

(14) Paragraph 5.14, Human Factors Considerations: Human factor scenarios are considered throughout all stages of the design process. Detailed information regarding these considerations can be found in Chapter 18.

(15) Paragraph 5.15, Reliability: The degree of redundancy, diversity, testability, and quality of the STP 3&4 safety-related I&C design adequately addresses the functional reliability necessary to perform its safety protection functions. As stated above, the safety-related I&C equipment is provided under an Appendix B quality program.

(16) Paragraphs 6.1 and 7.1, Automatic Control: The safety-related I&C systems provide the means to automatically initiate and control the required safety-related functions.

(17) Paragraphs 6.2 and 7.2, Manual Control: The safety-related I&C systems have features in the main control room and remote shutdown system to manually initiate and control the automatically initiated safety-related functions at the division level.

(18) Paragraph 6.3, Interaction between the Sense and Command Features and Other Systems: The safety-related I&C systems meet the independence and separation requirements such that nonsafety-related systems failures will not affect of prevent any safety-related protection function. The normal communication path is one-way such that the safety-related systems will only broadcast to nonsafety-related systems and not vice versa. There is limited nonsafety-related communication under programmatic control to safety-related systems as discussed in Section 7.9S.

(19) Paragraph 6.4, Derivation of System Inputs: To the extent feasible, the protection system inputs are derived from signals that directly measure the designated process variables.

(20) Paragraph 6.5, Capability for Testing and Calibration: The operational availability of the protection system sensors can be checked by perturbing the monitored variables, by cross-checking between redundant channels that have a known relationship with each other, and that have read-outs available, or introducing and varying substitute input to the sensor of the same nature as the measured variable. When one channel is placed into maintenance bypass mode, the condition is alarmed in the MCR and actuation logic capability is maintained to ensure the continued availability of all protective actions. Most sensors and actuators are designed to provide actual testing and calibration during power operation.

(21) Paragraphs 6.6 and 7.4, Operating Bypasses: The safety-related I&C systems automatically prevent the activation of an operating bypass whenever the applicable permissive conditions for an operating bypass are not met, and remove activated operating bypasses if the plant conditions change so that an activated operating bypass is no longer permissible.

(22) Paragraphs 6.7 and 7.5, Maintenance Bypasses: The capability of safety-related systems to perform their safety-related functions is retained when one division of the I&C systems is in maintenance bypass.

(23) Paragraph 6.8, Setpoints: STP 3&4 safety-related instrument setpoints are determined by a methodology that follows the guidance contained in the STP 3&4 setpoint methodology program. This methodology uses STP 3&4 plant specific analyses to ensure that characteristics such as range, accuracy, and resolution of the instruments meet the performance requirements assumed n the safety analyses in Chapter 15. The response times of the I&C systems are assumed in the safety analyses and verified by STP 3&4 surveillance testing or system analyses.

The power source design requirements for the safety-related I&C systems are discussed in Chapter 8.

Table 7.1-1 Comparison of GESSAR II and ABWR I&C Safety Systems

I & C System	GESSAR II Design	ABWR Design
General Comparisons for All Safety Systems:	Hard wired sensor interfaces.	~~*Multiplexed*~~ **Hard Wired** sensor interfaces.
	Nuclear system protection system (NSPS) solid-state-based logic and self-test system controllers.	Safety system logic & control (SSLC) **configurable logic devices and** microprocessor-based logic ~~*and*~~ **with** ~~*self-test*~~**self diagnostic functions** ~~*system controllers*~~.
Flammability Control System:	Part of combustible gas control system.	~~*Independent system.*~~**This system deleted**
Standby Gas Treatment System:	Redundant active and passive components.	Redundant active components; ~~*single filter train.*~~**two filter trains, two separate divisions.**

Table 7.1-2 Regulatory Requirements Applicability Matrix for I&C Systems

Applicable Criteria	10CFR 50.55	GDC																					
		2	4	10	12	13	15	16	19	20	21	22	23	24	25	28	29	33	34	35	38	41	44
Reference Standard (RG, IEEE, ISA)	~~279~~**603**																						

Table 7.1-2 Regulatory Requirements Applicability Matrix for I&C Systems (Continued)

Applicable Criteria	Regulatory Guide								BTP						II-D	II-E	II-F		II-K						
	1.22	1.62	1.75	1.97	1.105	1.118		1.151	3	12	20 (7.6)	21	22	26 (7.9)	3	4.2	1	3	1.23	3.13	3.15	3.18	3.21	3.22	3.23
Reference Standard (RG, IEEE, ISA)	~~279~~**603**	~~279~~**603**	384		567.04	338		567.02	~~279~~**603**	~~279~~**603**	~~279~~**603**	RG 1.47	RG 1.22	~~279~~**603**				RG 1.97							

Note: IEEE 603 has superceded the use of IEEE 279. In instances where NRC documents applicable to STP 3&4 still refer to the outdated IEEE 279 standard, both the referenced IEEE 279 requirements and the analogous IEEE 603 requirements will be used. In cases of conflict between requirements in the different standards, IEEE 603 requirements govern.

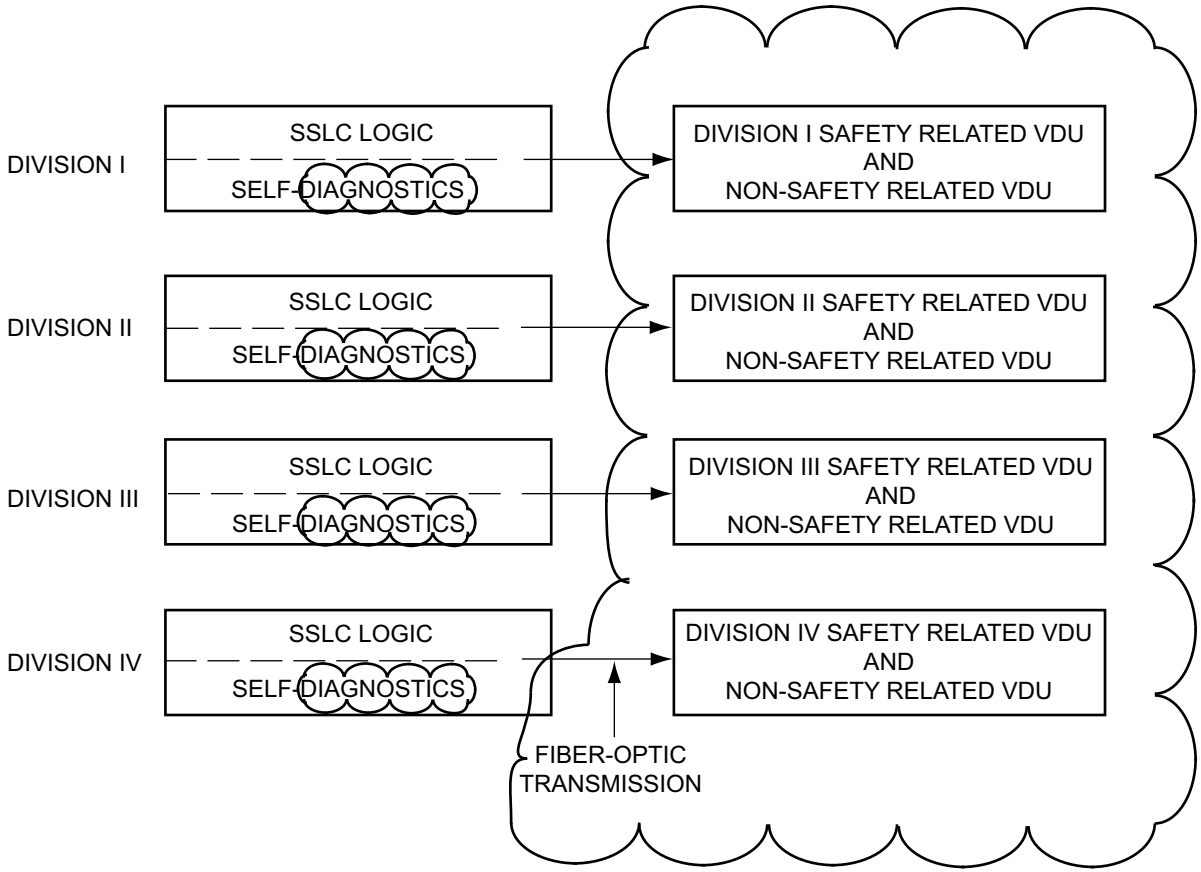

Figure 7.1-1 SSLC Self-~~*Test System*~~ Diagnosis

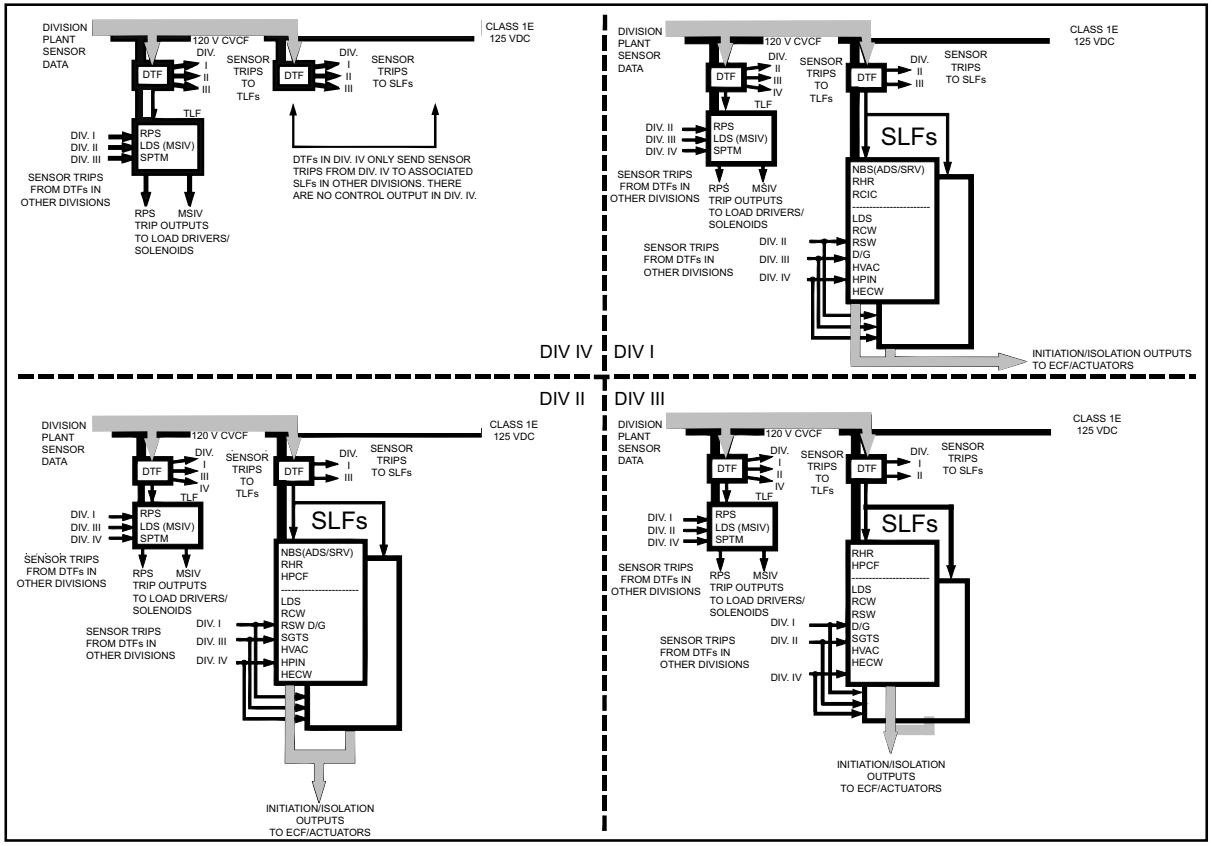

ABBREVIATIONS
DTF = DIGITAL TRIP FUNCTION
ECF = ESSENTIAL COMMUNICATION FUNCTION
SLF = SAFETY SYSTEM LOGIC FUNCTION
TLF = TRIP LOGIC FUNCTION

D/G = DIESEL GENERATOR
ESF = ENGINEERED SAFETY FEATURES
HECW = HVAC EMERGENCY COOLING WATER
HPCF = HIGH PRESSURE CORE FLOODER
HPIN = HIGH PRESSURE NITROGEN GAS SUPPLY
HVAC = HEATING, VENTILATING & AIR CONDITIONING
LDS = LEAK DETECTION & ISOLATION SYSTEM
MSIV = MAIN STEAM ISOLATION VALVE
NBS = NUCLEAR BOILER SYSTEM

NMS = NEUTRON MONITORING SYSTEM
PRM = PROCESS RADIATION MONITORING
RCIC = REACTOR CORE ISOLATION COOLING
RCW = REACTOR BUILDING CLOSED COOLING WATER
RHR = RESIDUAL HEAT REMOVAL
RPS = REACTOR PROTECTION SYSTEM
RSW = REACTOR SERVICE WATER
SGTS = STANDBY GAS TREATMENT SYSTEM
SPTM = SUPPRESSION POOL TEMPERATURE MONITORING

NOTES:
1. NMS AND PRM (NOT SHOWN) ARE STANDALONE SYSTEMS WITH TRIP OUTPUTS TO RPS AND ESF CONTROLLERS OF SSLC
2. POWER SOURCES (PER DIVISION)
ECF: CLASS 1E, 125 VDC and 120 CVCF
ESF: CLASS 1E, 125 VDC
RPS/MSIV: CLASS 1E, 120 CVCF
NMS/PRRM: CLASS 1E, 120 CVCF

Figure 7.1-2 Assignment of Interfacing Safety System Logic to SSLC Controllers

7.1S Instrumentation and Control Systems and Platforms

This supplemental section provides information for safety-related and nonsafety-related instrumentation and control (I&C) systems and platforms.

7.1S.1 Field Programmable Gate Array Based Platforms

The Reactor Trip and Isolation System (RTIS) and the safety-related portion of the Neutron Monitoring Systems (NMS) are Non-Rewritable (NRW)-Field Programmable Gate Array (FPGA)-based systems. NRW-FPGA based systems are configurable logic devices that process digital signals in a deterministic way.

7.1S.1.1 Reactor Trip and Isolation System

The Reactor Trip and Isolation System (RTIS) provides the logic and control functions for the Reactor Protection System (RPS) and Main Steam (MS) isolation. RPS is described in greater detail in Section 7.2. The RTIS is one part of the Safety System Logic and Control (SSLC).

The RTIS consists of modules for Digital Trip Functions (DTFs), Trip Logic Functions (TLFs), Output Logic Units (OLUs), and Load Drivers (LDs). The RTIS also contains a separate module for Suppression Pool Temperature Monitor (SPTM). The SPTM is described in Section 7.6.1.7.

The RTIS contains four redundant divisions of DTFs. The DTFs take digitized sensor information from sensors or the SPTM as input. For each system function, the DTF is a comparison of inputs to pre-programmed threshold levels (i.e., setpoints) for possible trip action. The result of the DTF is a discrete trip decision for each setpoint comparison. Each safety division performs the same DTF trip decision based on the independent inputs associated with its own division.

The trip decisions from the DTF in each division are used as input to the TLF performed by each of the four safety divisions. The DTF trip decision results are passed to other divisions through isolated communication links as described in Section 7.9S. The TLF processes DTF trip decisions from all four safety divisions resulting in trip output decisions based on 2-out-of-4 coincidence logic format. The logic format is fail-safe (i.e. loss of signal causes trip conditions) for the TLF and associated DTF. Loss of signal or power to a single division's equipment performing the TLF causes a tripped output state from the TLF, but the 2-out-of-4 configuration of the actuator load drivers prevents simultaneous deenergization of both pilot valve solenoids.

The TLF also receives input directly from the Neutron Monitoring System (NMS) and manual control switches. The details of the NMS system are provided in Section 7.6.1.1.

The trip coincident logic output from the TLF is sent to Output Logic Units (OLUs). The OLUs use devices that provide a diverse interface for the following manual functions:

- Manual reactor trip (per division: 2-out-of-4 for completion).
- MSIV closure (per division: 2-out-of-4 for completion).

- MSIV closure (eight individual control switches).
- RPS and MSIV trip reset.
- TLF output bypass

The OLUs distribute the automatic and manual trip outputs to the MSIV pilot valve and scram pilot valve actuating devices and provide control of trip seal-in, reset, and TLF output bypass (division-out-of-service bypass). Bypass inhibits automatic trip but has no effect on manual trip. The OLUs also provide a manual test input for de-energizing a division's parallel load drivers (part of the 2-out-of-4 output logic arrangement) so that scram or MSIV closure capability can be confirmed without solenoid de-energization. The OLUs are located external to the TLU equipment that implements the TLF so that manual MSIV closure or manual reactor trip (per division) can be performed either when a division's logic is bypassed or when failure of sensors or logic equipment causes trip to be inhibited.

If a 2-out-of-4 trip condition is satisfied within the TLF, all four divisions' trip outputs produce a simultaneous coincident trip signal (e.g., reactor trip) and transmit the signal through hardwired connections to OLUs that control the protective action of the final actuators. The load drivers for the solenoids are themselves arranged in a 2-out-of-4 configuration, so that at least two divisions must produce trip outputs for protective action to occur.

Bypass logic implemented by RTIS is described in Section 7.2.1.1.4.1(2) and shown on Figure 7.2-2.

Each of the four RTIS divisions are powered from their respective divisional Class 1E power supply. In the RTIS, independence is provided between Class 1E divisions, and also between the Class 1E divisions and non-Class 1E equipment.

7.1S.1.2 Neutron Monitoring System

A detailed description of the Neutron Monitoring System (NMS) is provided in Section 7.6.1.1 for safety related functions.

7.1S.1.3 Platform Description

The Reactor Trip and Isolation System (RTIS) and the safety-related portion of the Neutron Monitoring Systems (NMS) are implemented using Non-Rewritable (NRW)-Field Programmable Gate Array (FPGA)-based platforms.

Each FPGA-based system is a modular, chassis-based, rack-mounted system. FPGA-based systems are built as units, which provide the chassis and backplanes. The units perform specific functions, based on the modules placed in the backplane. Therefore, each module has unique architectural features, based on the differences in interfaces and requirements. The module design is implemented using only FPGAs. The design uses relatively simple medium-scale integrated discrete logic chips for all simple logic functions, such as a monostable multivibrator to implement a watchdog timer. Data is transferred between units over optical links.

Each module consists of one or more printed circuit boards and a front panel. The purpose of the front panel is to fix boards to the unit and to provide mounting for a Human-Machine Interface (HMI) and setpoints adjustment. The FPGA-based system also includes power supplies, analog and digital input/output modules, status modules, and all cabling and wiring necessary for operation. Each circuit board can contain one or more FPGAs.

The FPGA-based systems use logic chips that can be configured. The logic is physically embedded in FPGA chips using special tools. The logic is built from simple functional elements (FEs) that are designed to perform simple logic functions that can be combined and arranged in specific patterns to perform signal processing and logic operations, and thus construct the logic necessary to perform a defined function. Once the logic is embedded, the logic is hard coded and cannot be changed. After the logic is defined and embedded, the FPGA components are treated as hardware. An FPGA can only implement digital logic.

The FPGA-based system has self-diagnostic functions that continuously verify proper FPGA and communications performance and provide outputs used to alert the operator.

Each FPGA-based systems have the following attributes:

- Intra-Division Communication

  Data is transferred between units over optical links by the communication modules. The safety-related system has a one-way optical communication data link, providing fixed data sets to each safety-related system and to the nonsafety-related system with Class 1E to non-Class 1E isolation. RTIS offers no possibility of data transfer from the nonsafety to the safety equipment.

- Input / Output (I/O)

  There are I/O modules that are located in the units. Analog Output (AO) modules have analog outputs of up to 16 channels. There are several types of AO modules for different output ranges. AO Module provides electrical isolation capability from safety to nonsafety system. Digital I/O modules have four digital inputs and 16 digital outputs. External inputs and internals are isolated using photo couplers and solid-state relays.

- Power Supply

  The power supply module provides low voltage direct current (DC) power for equipped modules in each unit. The safety-related system has redundant power supply modules in each unit. The RTIS equipment is divisionally powered from multiple Class 1E power sources, one of which is DC backed.

7.1S.2 Microprocessor Based Platforms

The Engineered Safety Features and Control System (ELCS) will be implemented with a microprocessor based platform.

7.1S.2.1 Engineered Safety Features Logic and Control System (ELCS)

The Engineered Safety Features Logic and Control System (ELCS) provides the instrumentation and control functions of automatic actuation, control and display for the Engineered Safety Features (ESF) systems.

The ELCS contains four redundant divisions of Digital Trip Functions (DTFs). The four divisions of DTF safety function actuation status are communicated to three divisions of Safety Logic Functions (SLFs), which correspond to the three divisions of ESF actuated equipment. Each SLF performs two-out-of-four logic on the four redundant DTFs. The DTF to SLF communication and isolation features are described in Section 7.9S.

Each ELCS division is powered from independent power sources.

For the four redundant divisions of ELCS DTFs, any single division of sensors from one DTF can be manually bypassed, causing the ESF safety function actuation logic in the SLFs to become two-out-of-three, while the bypass state is maintained. The bypass status is indicated in the main control room until the bypass status is removed. Only one division can be placed in bypass. An interlock rejects attempts to remove more than one division from service at a time.

As shown in Tier 1 Figure 3.4B, each of the three ESF component actuation divisions contains a minimum of two SLFs. The SLF logic for ECCS functions (i.e. initiation of Reactor Core Isolation Cooling, High Pressure Core Flooder or Automatic Depressurization) is implemented using two redundant SLF processing channels per division. The two redundant channels receive the data from the four redundant divisional DTFs, manual control switch inputs and contact closures. The two redundant SLF processing channels perform the same ESF safety function action logic. One of the two SLFs processes initiation logic for functions that service the reactor vessel at low pressure (e.g. RHR), while a second SLF provides the same support for the vessel at high pressure (e.g. Reactor Core Isolation Cooling (RCIC system and High Pressure Core Flooder (HPCF)) system).

The two redundant SLF processing channels must agree for initiation of the ESF safety function to occur. Two SLF processing channels are used to prevent the inadvertent system level actuation of the ESF safety functions that inject coolant to the core or depressurization.

However, in the event of a failure detected by self diagnostics within either processing channel, a bypass (ESF output channel bypass) is applied automatically (with manual backup) such that the failed SLF processing channel is removed from service. SLF processing channel failures are alarmed in the main control room. If a failed channel is not automatically bypassed, the operator is able to manually bypass the failed channel.

The two-out-of-two voting of the two SLF processing channels is performed on a component basis with non-microprocessor based equipment or with a separate actuation for a valve from one SLF processing channel and a related pump actuation

from the second SLF processing channel, where both are required to initiate coolant injection.

As shown in Tier 1 Figure 3.4b, each ELCS division includes the following major elements:

- Sensors provide signal input to the ELCS. For ELCS safety functions, the appropriate sensors are connected to the Digital Trip Function.
- The Digital Trip Function receives input signals directly and also receives remote input signals from a Remote Digital Logic Controller (RDLC). The RDLC communicates the remote input signals to the DTF utilizing high speed serial link (HSL) communication with redundant fiber optic modems and optical data cable. HSL communication is described in Section 7.9S.
- The DTF provides a comparison of signal inputs to associated setpoints to determine the trip status for each ESF safety function. The DRF communicates trip status to the Safety Logic Functions (SLFs) in each division by means of optical-based HSL communication links.
- Individual DTF to SLF communication is provided with single fiber optic cable since the DTF and SLF are both located in the MCR area.

SLFs are provided in each of the three ESF divisions that provide electromechanical component actuation. Each division's SLFs receive ESF safety function actuation status signals from each of the DTFs in the four redundant divisions. The division's SLFs calculate ESF system level actuation status by determining whether there is a two-out-of-four coincidence of DTF ESF safety function trip signals. The SLF also receives hardwired signals for manual bypass and manual system level actuation of ESF components from I/O that is local to the SLF. The SLF communicates ESF actuation commands to the SLF I/O stations that are located in areas that are remote from the MCR by HSL. The fiber optic cables are redundant for the communication of ESF safety function actuation commands from the SLF to the SLF remote I/O.

The SLF Remote Digital Logic Controller (RDLC) provides I/O and ESF component control logic and actuation. At the RDLC a Component Interface Module (CIM) is provided for each controlled electromechanical component assigned to the SLF. The CIM interfaces the ESF actuation command signals (or control commands in the absence of actuation) from the SLFs to the electromechanical ESF component.

The CIM provides priority logic to override control when an ESF actuation occurs. Logic in the CIM also provides voting of redundant SLF processing channels signals, for ESF safety functions that require SLF redundancy. The CIM receives component position and status feedback signals from the component control circuit. The CIM provides local control capability for maintenance.

Each ELCS division has an intra-division network that connects the ELCS controllers with flat panel safety displays in the main control room and a Maintenance and Test Panel. The intra-division network is described in section 7.9S.

For each ELCS division, there are two safety display stations in the main control room. Each safety display is driven by a flat panel display subsystems.

Each ELCS division has a permanently connected Maintenance and Test Panel (MTP) and an Interface and Test Processor (ITP). The MTP and ITP are utilized for the maintenance technician functions.

7.1S.2.2 ELCS Platform

The platform that implements the ELCS has the following major elements:

- Controller, including high speed serial link communications
- Intra-division Network communication
- Input / Output
- Flat Panel Display
- Maintenance and Test Panel
- Power Supplies
- Component Interface Module

The ELCS Controller subsystem is modular. A passive backplane connects individual module slots, which can house the following module types:

- Controller module
- Intra-division communication module
- Input / Output modules

7.1S.2.3 ELCS Controller

The controller contains two sections, a processing section and a communication section. The processing section contains a microprocessor and memory for the applications programs. The processing section memory utilizes Flash PROM for system software, Flash PROM for application software, and RAM.

The communication section contains another microprocessor and memory for communications with other Controllers in different chasses. The communications memory utilizes Flash PROM for system software and RAM. The communications section performs the HSL communications functions and the HSL diagnostics.

The two controller sections communicate through shared memory. The shared memory provides for communications isolation. The ELCS Controller performs self-diagnostics, including an internal watchdog timer, and is able to determine that the required module types are located in the appropriate slot.

The backplane allows multiple Controllers to be utilized in a single chassis. The controllers communicate through shared memory that is located on the Intra-division communication module.

- Intra-Division Communication

  The communication module provides the interface for the intra-division communication network. The intra-division performs communication diagnostics, Intra-division communications are described in Section 7.9S.

- Input / Output

  The Controller uses compatible I/O modules that are located in the chassis with the controller. Additional chasses of I/O modules can be added to the first Controller chassis if additional I/O is necessary. A range of modules is available covering analog and digital signals of various types. In addition, there are modules for temperature measurement and rotational speed measurement.

  The system software in the Controller automatically checks that all modules are operating correctly at system startup. Module diagnostic failures are reported to the Controller.

- Flat Panel Display

  The flat panel display subsystem consists of the flat panel display with touch screen capability, a single board computer, and standard communication interfaces for communication to the intra-division network.

  For STP Units 3 and 4, the RTIS and NMS utilize the ELCS flat panel display subsystem to display selected information. Each division of RTIS and NMS send data to a communication interface associated with the same ELCS division. The RTIS and NMS utilized serial fiber optic data links over fiber optic media. The communication interface then communicates the RTIS and NMS information to an interface module on each flat panel display subsystem. The data flow is unidirectional from RTIS and NMS to the ELCS communication interface.

- Maintenance and Test Panel (MTP)

  The MTP will be used for technician surveillance, maintenance and test functions for each division. The MTP provides the means for the operator or technician to change setpoints, insert and remove bypasses, support periodic testing, and display detailed system diagnostic messages. The MTP provides features that support the administrative control for the activities.

  The MTP utilizes a flat panel display subsystem in conjunction with the ITP for monitoring diagnostics and providing a periodic test interface for other Controllers. The MTP and ITP are connected to the intra-division network.

  The MTP flat panel display subsystem also includes a communication interface to the nonsafety system. The MTP communication interface to the nonsafety systems provide for communication isolation to assure that data flows in a unidirectional manner from the ELCS to the nonsafety systems. The communication interface

utilizes an optical connection to the nonsafety systems to provide electrical isolation.

- Power Supply

  The power supply subsystem provides low voltage direct current (DC) power for the ELCS equipment that requires it. ELCS equipment is divisionally powered from multiple Class 1E power sources, one of which is DC backed.

- Component Interface Module (CIM)

  In general, the CIM provides the interface between the ELCS actuation and control command signals and the electromechanical device associated with the final ESF components. Electromechanical components with non-standard signal interface requirements may not use a CIM, but could be interfaced with discrete I/O.

7.1S.3 Plant Information and Control System (Non-Safety)

The Plant Information and Control System (PICS) provides integrated process control, monitoring, and human-system interface functions for the nonsafety-related plant process systems. PICS includes computer workstations for the human interface and data processing, controllers and servers for the process control functions, and a real-time communications network to share data between the different controller and computer processors. Typical data communication interfaces to PICS are illustrated in Figure 7.9S-1.

The Plant Computer Functions (PCFs) are a set of functions that were provided by the Process Computer System (PCS) in the original ABWR DCD design. The STP 3&4 design does not have a PCS. These PCFs are a subset of PICS and include data display and alarms, plant computer calculations (e.g., Power Generation Control System (PGCS)) and data recording (logging) (see Subsections 7.7.1.5, 7.7.2.5 and 7.7.1.2.2 (6)), and historical archiving (including Sequence of Events). The PCFs have not changed from those of the ABWR DCD Process Computer System.

The PICS is configured as a distributed control system (DCS). Therefore, PICS, as a DCS, is an integrated set of control processors, servers, workstations, and applications that provide plant wide process control and monitoring. PICS also acts as the supervisory control system and provides the primary interface between the control room operators and the plant process and equipment data and control capabilities. Several computer processors are linked together via a real-time communications network, sharing the computer processing tasks.

Each computer processor transmits and receives data from the communications network. Each device in the network receives the same data at essentially the same time, creating a network database that is shared by each of the computer processors.

PICS has the following major elements:

- Control processors and servers

- Workstations
- Network Communications
- Input/Output Modules
- Video Display Units

7.2 Reactor Protection (Trip) System (RPS)—Instrumentation and Controls

The information in this section of the reference ABWR DCD, including all subsections, tables and figures, is incorporated by reference with the following departures and supplements.

STD DEP T1 2.3-1 (Table 7.2-1, 7.2-2, Figures 7.2-2, 7.2-6, 7.2-9, 7.2-10)

STD DEP T1 3.4-1 (Figures 7.2-2, 7.2-9, 7.2-10)

STD DEP 1.8-1

STD DEP 7.1-1

STD DEP 7.2-4

STD DEP 7.2-6 (Table 7.2-1)

STD DEP 7.6-1

STD DEP 8.3-1

STD DEP Admin

7.2.1 Description

7.2.1.1 System Description

7.2.1.1.1 RPS Identification

STD DEP T1 3.4-1

The Reactor Protection System (RPS) is the overall complex of instrument channels, trip logics, trip actuators and scram logic circuitry that initiate rapid insertion of control rods (scram) to shut down the reactor. The RPS also establishes reactor operating modes and provides status and control signals to other systems and annunciators. To accomplish its overall function, the RPS interfaces with the ~~Essential Multiplexing System,~~ Neutron Monitoring System, ~~Process Radiation Monitoring System~~, Control Rod Drive System, Rod Control and Information System, Reactor Recirculation Control System, ~~Process Computer System~~, Plant Computer Function*, Nuclear Boiler System and other plant systems and equipment. These interfaces are discussed in detail in the following subsections. The RPS IED is provided as Figure 7.2-9. The RPS IBD is provided as Figure 7.2-10.*

7.2.1.1.4 RPS Equipment Design

The following standard supplement addresses design-related information originally provided in Chapter 20 of the reference ABWR DCD.

The RPS design will utilize proven technology to ensure that a sufficient failure rate history is available to support reliability goals.

7.2.1.1.4.1 General RPS Equipment

STD DEP T1 3.4-1

STD DEP Admin

The RPS equipment is divided into four redundant divisions of sensor (instrument) channels, trip logics and trip actuators, and two divisions of manual scram controls and scram logic circuitry. The sensor channels, divisions of trip logics, divisions of trip actuators and associated portions of the divisions of scram logic circuitry together constitute the RPS scram and air header dump (backup scram) automatic initiation logic. The divisions of manual scram controls and associated portions of the divisions of scram logic circuitry together constitute the RPS scram and air header dump manual initiation logic. The automatic and manual scram initiation logics are independent of each other. RPS equipment arrangement is shown in Figure 7.2-2.

(1) Sensor Channels

Equipment within a sensor channel includes primarily sensors (transducers or switches), ~~multiplexers~~ and digital ~~trip modules (DTMs)~~ trip functions (DTFs)*. The sensors within each channel monitor plant variables (Subsection 7.2.1.1.4.2)* and *send either analog or discrete output to ~~remote multiplexer units (RMUs) within the associated division of Essential Multiplexing System (EMS)~~* the DTF. *~~Each division of the EMS performs analog-to-digital conversion on analog signals and sends the digital or digitized analog output values of all monitored variables to the DTM within the associated RPS sensor channel.~~ The ~~DTM~~* DTF *in each sensor channel compares individual monitored variable values with trip setpoint values and for each variable sends a separate, discrete (trip/no trip) output signal to all four divisions of trip logics.*

All equipment within a sensor channel is powered from the same division of Class 1E power source. However, different pieces of equipment may be powered from separate DC power supplies. Within a sensor channel, sensors themselves may belong to the RPS or may be components of another system. ~~Signal conditioning and distribution performed by the RMUs is a function of the EMS and is discussed in Section 7A.2~~.

(2) Divisions of Trip Logics

*Equipment within a division of trip logic includes primarily manual switches, ~~bypass units (BPUs)~~*bypass interlock functions*, trip logic ~~units~~*functions *(~~TLUs~~*TLFs*) and output logic units (OLUs). The various manual switches provide the operator means to modify the RPS trip logic for special operation, maintenance, testing and reset. The ~~BPUs~~*bypass interlock functions enforce restrictions on bypassing multiple divisions of related functions. The bypass interlock functions *perform bypass and interlock logic for the channel sensors bypass, main steamline isolation trip special bypass and division trip logic unit bypass. These three bypasses are all manually initiated through ~~individual~~*

*~~keylock~~*bypass *switches within each of the four divisions. Each ~~BPU~~*bypass switch *sends a separate bypass signal for all four channels to the ~~TLU~~*TLF *in the same division for channel sensors bypass and MSL isolation trip special bypass. Each ~~BPU~~*bypass switch *sends the ~~TLU~~*TLF *bypass signal to the OLU in the same division.*

The ~~TLUs~~ TLFs *perform automatic scram initiation logic based on reactor operating mode, channel and division trip conditions and bypass conditions. Each ~~TLU~~*TLF *receives ~~bistable~~* bypass *input signals from the ~~BPU~~*bypass switch *and various switches in the same division and receives isolated ~~bistable~~* trip *inputs from all four sensor channels* of RPS *and divisions of the NMS.*

*The OLUs perform division trip, seal-in, reset and trip test function. Each OLU receives bypass inputs from the ~~BPU~~*bypass switch*, trip inputs from the ~~TLU~~*TLF *and various manual inputs from switches within the same division and provides discrete trip outputs to the trip actuators in the same division. Each OLU also receives an isolated discrete division trip reset permissive signal from equipment associated with one of the two divisions of scram logic circuitry.*

*All equipment within a division of trip logic is powered from the same division of Class 1E power source. However, different pieces of equipment may be powered from separate DC power supplies, and the ~~BPU, TLU~~*TLF *and OLU within a division must be powered from separate DC power supplies.*

7.2.1.1.4.2 Initiating Circuits

STD DEP T1 2.3-1

STD DEP T1 3.4-1

STD DEP 7.2-4

STD DEP 7.6-1

STD DEP Admin

The RPS will initiate a reactor scram when any one or more of the following conditions occur or exist within the plant:

(7) ~~High Main Steamline Radiation~~ Not Used

The systems and equipment that provide trip and scram initiating inputs to the RPS for these conditions are discussed in the following subsections. With the exception of the NMS (1) ~~and PRRM (7)~~, ~~and the TB trips (5 and 7) all of the building signals (9) and (10),~~ all of the other systems provide sensor outputs ~~through the EMS~~ to the DTF*. Analog-to-digital conversion of these sensor output values is done by ~~EMS~~* DTF *equipment. NMS ~~and PRRM~~ trip signals are provided directly to the RPS by* the *NMS ~~and PRRM~~ trip logic ~~units~~* function*. The turbine building signals 9 and 10 are hardwired*

to connections in the control building.~~ The TB trips (5 and 7) are provided through hardwired connections.~~

(1) Neutron Monitoring System (NMS)

Each of the four divisions of the NMS equipment provides separate, isolated, bistable SRNM trip and APRM trip signals to all four divisions of RPS trip logics (Figure 7.2-5).

(b) APRM Trip Signals

*The APRMs of the NMS provide trip signals to the RPS to cover the range of plant operation from a few percent to greater than reactor rated power. ~~Five~~*Six *conditions monitored as a function of the NMS comprise the APRM trip logic output to the RPS. These conditions are high neutron flux, high simulated thermal power, APRM inoperative, oscillation power range monitor (ORPM) trip,* OPRM Inoperative, or *reactor core flow rapid coastdown. The specific condition within the NMS that caused the APRM trip output is not detectable within the RPS.*

(c) OPRM Trip Signals

*The OPRM is a functional subsystem of the APRM in each of the four APRM channels. The OPRM trip outputs are ~~combined with other~~*described with the *APRM trip signals ~~to produce the final RPS trip signal~~*above*. The OPRM detects thermal hydraulic instability; its RPS trip function suppresses neutron flux oscillation prior to the violation of safety thermal limits.*

(2) Nuclear Boiler System (NBS) (Figure 7.2-6)

(a) Reactor Pressure

Reactor pressure is measured at four physically separated locations by locally mounted pressure transducers. Each transducer is on a separate instrument line and provides analog equivalent output ~~through the EMS~~ to the ~~DTM~~ DTF *in one of four RPS sensor channels. The pressure transducers and instrument lines are components of the NBS.*

(b) Reactor Water Level

Reactor water level is measured at four physically separated locations by locally mounted level (differential pressure) transducers. Each transducer is on a separate pair of instrument lines and provides analog equivalent output ~~through the EMS~~ to the ~~DTM~~ DTF *in one of the four RPS sensor channels. The level transducers and instrument lines are components of the NBS.*

(c) Drywell Pressure

Drywell pressure is measured at four physically separated locations by locally mounted pressure transducers. Each transducer is on a separate instrument line and provides analog equivalent output ~~through the EMS~~ to the ~~DTM~~ DTF in one of the four RPS sensor channels of the NBS.

(d) Main Steamline Isolation (Figure 7.2-4)

Each of the four main steamlines can be isolated by closing either the inboard or the outboard isolation valve. Separate position switches on both of the isolation valves of one of the main steamlines provide bistable output ~~through the EMS~~ to the ~~DTM~~ DTF in one of the four RPS sensor channels. Each main steamline is associated with a different RPS sensor channel. The main steamline isolation valves and position switches are components of the NBS.

(e) High Suppression Pool Temperature

Suppression pool temperature is measured at ~~four~~ physically separated locations by locally mounted sensors. ~~Each sensor is on a separate instrument line and provides analog equivalent of suppression pool temperature to the EMS which~~, These sensors are monitored by divisional I/O devices which digitize the signals and, in turn, provide ~~provides~~ digitized suppression pool temperature data to the suppression pool temperature monitoring (SPTM) module of ~~SSLC~~ the reactor trip and isolation system (RTIS). ~~SSLC~~ The SPTM module, after processing and averaging the data, provides the trip signal to the corresponding RPS divisional ~~DTM~~ DTF, when the calculated average temperature exceeds the setpoint.

(3) Control Rod Drive (CRD) System (Figure 7.2-6)

(a) CRD Charging Header Pressure

CRD charging header pressure is measured at four physically separated locations by locally mounted pressure transducers. Each transducer is on a separate instrument line and provides analog equivalent output ~~through the EMS~~ to the ~~DTM~~ DTF in one of the four RPS sensor channels. The pressure transducers and instrument lines are components of the CRD System.

(4) ~~Process Radiation Monitoring (PRM) System (Figure 7.2-6)~~ Not Used

~~(a) Main Steamline Radiation~~

~~Main steamline radiation is measured by four separate radiation monitors. Each monitor is positioned to measure gamma radiation in all four main steamlines. The PRM System then provides a separate bistable output to the DTM in each of the four RPS sensor channels.~~

~~*The radiation monitors and associated equipment that determine whether or not main steamline radiation is within acceptable limits are components of the PRM System.*~~

(6) Reactor Protection System (Figure 7.2-3)

(a) Turbine Stop Valve Closure

Turbine stop valve closure is detected by separate valve stem position switches on each of the four turbine stop valves. Each position switch provides bistable output through hard-wired connections to the ~~DTM~~ DTF *in one of the four RPS sensor channels. The turbine stop valves are components of main turbine; however, the position switches are components of the RPS.*

(b) Turbine Control Valve Fast Closure

Low hydraulic trip system oil pressure is detected by separate pressure switches on each of the four turbine control valve hydraulic mechanisms. Each pressure switch provides bistable output through hard-wired connections to the ~~DTM~~ DTF *in one of the four RPS sensor channels. The turbine control valve hydraulic mechanisms are components of the main turbine; however, the position and pressure switches are components of the RPS.*

(c) Manual Scram

Two manual scram switches or the reactor mode switch provide the means to manually initiate a reactor scram independent of conditions within the sensor channels, divisions of trip logics and divisions of trip actuators. Each manual scram switch is associated with one of the two divisions of actuated load power.

~~*In addition to the scram initiating variables monitored by the RPS, one bypass initiating variable is also monitored.*~~

7.2.1.1.4.3 RPS Logic

STD DEP T1 2.3-1

STD DEP T1 3.4-1

*(2) Division Trip Logic ~~Unit~~*Function *Bypass*

*A separate, manual, keylock switch in each of the four divisions provides means to bypass that division's trip ~~unit~~*function *output to the scram logic. The effect of the division trip logic bypass is to reduce the scram logic to a coincidence of two out of three tripped divisions. Interlocks between the four division trip logic bypasses prevent bypass of any two or more division trip logics at the same time. Once a bypass of one division of trip logic has been*

established, bypasses of any of the remaining three division trip logics are inhibited.

(3) MSL Isolation Special Bypass (Figure 7.2-4)

A separate, manual, keylock switch associated with each of the four sensor channels provides means to bypass the MSL isolation trip output signal from the sensor channel to all four divisions of trip logic. This bypass permits continued plant operation while any one MSL is isolated without causing a half scram condition. The effect of the MSL isolation special bypass is to reduce the MSL isolation trip function in all four divisions of trip logic to a coincidence of two out of three sensor channel MSL isolation trips. Interlocks between the four divisions of trip logic prevent MSL isolation special bypass in any sensor channel when either a channel sensors bypass or a MSL isolation special bypass is present in any other sensor channel. Once a MSL isolation special bypass has been established in one sensor channel, the same bypass is inhibited in the other three channels. This bypass is inhibited in all three remaining channels when any channel sensor bypass exists.

The following standard supplement addresses continued operation with an isolated main steamline.

Continued operation with an isolated MSL is only permitted if an analysis of the effects of flow-induced vibration on the remaining open MSIVs and other critical components in the reactor and steam systems has been performed. Continued plant operation must remain within the bounds of this analysis.

(4) Trip Logic and Operating Bypasses

~~*High Main Steamline Radiation Trip (Figure 7.2-6)*~~

~~*A high main steamline radiation trip will occur in each division of trip logic when a main steamline radiation trip condition exists in any two or more unbypassed sensor channels. There are no operating bypasses associated with this trip function.*~~

7.2.1.1.4.4 Redundancy and Diversity

STD DEP T1 3.4-1

Instrument sensing lines from the reactor vessel are routed through the drywell and terminate outside the primary containment. Instruments mounted on instrument racks in the four quadrants of the Reactor Building sense reactor vessel pressure and water level from this piping. Valve position switches are mounted on valves from which position information is required. The sensors for RPS signals from equipment in the Turbine Building are mounted locally. The four battery-powered inverters and divisional 120 VAC power suppliers for the SSLC and RPS are located in an area where they can be serviced during reactor operation. Sensor signals ~~*(via the multiplex network)*~~ *and power cables are routed to four* ~~*SSLC*~~RTIS *cabinets (in which RPS*

components are located) in the divisional electrical compartments. One logic cabinet is used for each division.

7.2.1.1.4.6 Separation

STD DEP T1 3.4-1

Four independent sensor channels monitor the various process variables listed in Subsection 7.2.1.1.4.2. The redundant sensor devices are separated so that no single failure can prevent a scram. The arrangement of RPS sensors mounted in local racks is shown in Figure 7.2-2. Locations for local RPS racks and panels are shown on the instrument location drawings provided in Section 1.7. ~~Divisional separation is also applied to the Essential Multiplexing System (EMS) Dwhich provides data highways for the sensor input to the logic units.~~ Physically separated cabinets are provided for the four scram logics. ~~Fiber optic cable routing from remote multiplexing units (RMUs) remote digital logic controllers to control room equipment is shown in raceway plans provided by reference in Section 1.7.~~ The criteria for separation of sensing lines and sensors are discussed in Section 7.1.

RPS inputs to annunciators~~, recorders,~~ and the plant *computer* function (PCF) *are arranged so that no malfunction of the annunciating~~, recording, or computing~~ equipment* or the PCFs *can functionally disable the RPS. Direct signals from RPS sensors are not used as inputs to annunciating ~~or data logging~~ equipment* or the PCFs*. Electrical isolation is provided between the primary signal and the information output by fiber-optic cable interfaces.*

7.2.1.1.6 Operational Considerations

7.2.1.1.6.1 Reactor Operator Information

STD DEP T1 3.4-1

(2) Annunciators

Each RPS trip channel input is ~~provided to the Containment Cooling System (CCS) annunciator system~~ annunciated *through isolation devices. Trip logic trips, manual trips, and certain bypasses also signal the annunciator system.*

(3) Computer Alarms

*~~A~~*The plant *computer ~~printout~~*function (PCF) display *identifies each tripped channel; however, status indication at the RPS trip channel device may also be used to identify the individual sensor that tripped in a group of sensors monitoring the same variable.*

Upon detection of a status change of any of the preselected sequential events contacts, the sequence-of-events log shall be initiated and shall signal the beginning of an event. This log will include both NSSS and BOP inputs. Changes of state received 5 milliseconds or more apart are sequentially differentiated on the printed log, together with time of occurrence, which shall

be printed in hours, minutes, seconds, and milliseconds.~~ Use of the alarm typewriter and computer is not required for plant safety. The printout of trips is particularly useful in routinely verifying the correct operation of pressure, level, and valve position switches as trip points are passed during startup, shutdown, and maintenance operations.~~

7.2.1.1.7 Setpoints

STD DEP T1 2.3-1

Instrument ranges are chosen to cover the range of expected conditions for the variable being monitored. Additionally, the range is chosen to provide the necessary accuracy for any required setpoints and to meet the overall accuracy requirements of the channel.

(9) ~~*Main Steamline High Radiation*~~ Not Used

~~*High radiation in the vicinity of the main steamlines may indicate a gross fuel failure in the core. When high radiation is detected near the steamlines, a scram is initiated to limit release of fission products from the fuel. The high radiation trip setting is selected high enough above background radiation levels to avoid spurious scrams yet low enough to promptly detect a gross release of fission products from the fuel. More information on the trip setting is available in Section 7.3.*~~

7.2.1.1.10 Main Control Room Area

STD DEP T1 3.4-1

Virtually all hardware within the RPS design scope is located within the four separate and redundant reactor trip and isolation system (RTIS) cabinets of the *safety system logic and control (SSLC)* system ~~*cabinets*~~ *in the main control room, except the instrumentation for monitoring turbine stop valve closure and turbine control valve fast closure, and turbine first-stage pressure. The panels are mounted on four separate control complex system steel floor sections which, in turn, are installed in the main control room. The major control switches are located on the principal console.*

7.2.1.1.11 Control Room Cabinets and Their Contents

STD DEP Admin

STD DEP T1 3.4-1

The ~~*SSLC logic*~~ RTIS *cabinets* of SSLC, ~~*which contain*~~ containing *the RPS for Divisions I, II, III, and IV*~~*,*~~ *include* ~~*a vertical board*~~ input signal cards *for each division. The* ~~*vertical boards*~~ input signal cards *contain digital and solid-state discrete and integrated circuits used to condition signals transferred to the* ~~*SSLC*~~RTIS ~~*from the EMS*~~*. They also contain combinational and sequential logic circuits for the initiation of safety actions and/or alarm annunciation, isolators for electrical and physical separation of circuits used to transmit signals between redundant safety systems or*

between safety and non-safety systems, and system support circuits such as power supplies, ~~automatic testing circuits,~~ etc. Load drivers with solid-state switching outputs for actuation solenoids, motor control centers, or switchgear may be located in the control room.

7.2.1.2 Design Bases

STD DEP T1 3.4-1

STD DEP 1.8-1

STD DEP 7.1-1

STD DEP 8.3-1

STD DEP Admin

Design bases information requested by IEEE-~~279~~603 is discussed in the following paragraphs. These IEEE-~~279~~603 design bases aspects are considered separately from those more broad and detailed design bases for this system cited in Subsection 7.1.2.2.

(3) Sensors

A minimum number of LPRMs per APRM are required to provide adequate protective action. This is the only variable that has spatial dependence (IEEE-~~279~~603, Paragraph ~~3.3~~4.6.

(5) Margin Between Operational Limits

The margin between operational limits and the limiting conditions of operation (scram) for the Reactor Protection System are described in Chapter 16 .~~The margin includes the maximum allowable accuracy error, sensor response times, and sensor setpoint drift.~~

(7) Ranges of Energy Supply and Environmental Conditions

The RPS 120 VAC power is provided by the four battery-powered inverters, for the SSLC, each with an alternate Class 1E 120 VAC supply. The batteries, which are designed for a two-hour minimum capacity, have sufficient stored energy to ride through switching transients in the switch yards in order to prevent switching transients from causing a scram. The alternate sources of 120V power are provided to each SSLC bus from transformers powered from the ~~6.9 kV~~ 4.16kV emergency diesel generators. Since there are three diesel generators, the fourth division alternate power originates from the ~~first~~second division diesel.

(8) Unusual Events

(d) Fires

To protect the RPS in the event of a postulated fire, the RPS trip logics are contained within the four separate independent ~~SSLC~~divisional cabinets. The separation of the cabinets and their individual steel construction assures that the RPS functions will not be prevented by a postulated fire within any of the divisional panels. Incombustible or fire retardant materials are used as much as possible. The use of separation and fire barriers ensures that even though some portion of the system may be affected, the RPS will continue to provide the required protective action (Section 9.5).

(9) Performance Requirements

A logic combination (two out of four) of instrument channel trips actuated by abnormal or accident conditions will initiate a scram and produce independent logic seal-ins within each of the four logic divisions. The trip conditions will be annunciated and recorded on the ~~process computer~~ PCF. The trip seal-in will maintain a scram signal condition at the CRD System terminals until the trip channels have returned to their normal operating range and the seal-in is manually reset by operator action. Thus, once a trip signal is present long enough to initiate a scram and the seal-ins, the protective action will go to completion.

7.2.2.1 Conformance to Design Bases Requirements

STD DEP T1 2.3-1

STD DEP T1 3.4-1

STD DEP 7.1-1

(1) Design Bases 7.1.2.2(1)(a)

Table 7.2-1 provides a listing of the sensors selected to initiate reactor scrams and delineates the range for each sensor. ~~Setpoints, and accuracy and response time can be found in Chapter 16~~ The methods for calculating setpoints are described in Chapter 16. Response times are included in the analysis calculation for the design limit. *This information establishes the precision of the RPS variable sensors.*

(3) Design Basis 7.1.2.2(1)(c)

The scram initiated by the main steamline ~~radiation monitoring system~~ isolation valve closure *and reactor vessel low-water level* (Level 3) *satisfactorily limits the radiological consequences of gross failure of the fuel or RCPB. (Chapter 15 evaluates gross failure of the fuel and RCPB). In no case does the release of radioactive material to the environs result in exposures which exceed the guidelines of applicable published regulations.*

(7) RPS Design Basis 7.1.2.2.1(1)(g) through (n)

The RPS is designed so that it is only necessary for trip variables to exceed their trip setpoints for sufficient length of time to trip the digital trip ~~modules~~ functions *and seal-in the associated trip logic. Once this is accomplished, the scram will go to completion regardless of the state of the variable which initiated the protective action.*

The ability of the RPS to function properly with a single failure is discussed in Subsection ~~7.2.1.2~~ 7.2.1.1.4.4*.*

The ability of the RPS to function properly while any one sensor or channel is bypassed or undergoing test or maintenance is discussed in Subsection ~~7.2.1.2~~ 7.2.1.1.4.3*.*

The following standard supplement addresses the licensing requirements from 7.1.2.2(1).

(9) Design Basis 7.1.2.2(1)(q), (r) and (s)

Selective automatic and manual operational trip bypasses that permit proper plant operation are provided.

Manual control switches for initiation of reactor scram by plant operator are provided.

Mode switch to allow appropriate operational trips is provided.

7.2.2.1.1 Other Design Basis Requirements

STD DEP T1 3.4-1

(1) Control rod status ~~lamps indicating~~ indication of *each rod fully inserted.*

(2) Control rod scram valve status ~~lamps~~ indicating open valves.

7.2.2.2.2 Regulatory Guides

STD DEP T1 3.4-1

STD DEP 1.8-1

STD DEP Admin

(3) Regulatory Guide 1.53—Application of the Single-Failure Criterion to Nuclear Power Plant Protection Systems.

*Compliance with NRC Regulatory Guide 1.53 is met by specifying, designing, and constructing the Reactor Protection System to meet the single-failure criterion described in Section ~~4.2~~*5.1 *of IEEE-~~279~~*603 *(~~Criteria for Protection~~*Standard Criteria for Safety *Systems for Nuclear Power Generating Stations) and IEEE-379 (Standard Application of the Single-Failure Criterion to Nuclear Power Generating Station Class 1E Systems).*

Redundant sensors are used and the logic is arranged to ensure that a failure in a sensing element of the decision logic or an actuator will not prevent protective action. Separated channels are employed so that a fault affecting one channel will not prevent the other channels from operating properly. A complete discussion of the RPS power supplies is presented in Subsection 7.2.1.1.

(4) Regulatory Guide 1.62—Manual Initiation of Protective Actions.

Manual initiation of reactor scram, once initiated, goes to completion as required by IEEE-~~279~~603, ~~Section 4.16~~ Sections 5.2 and 7.3.

(5) Regulatory Guide 1.75—Physical Independence of Electric Systems

The RPS complies with the criteria set forth in IEEE-~~279~~603, Paragraph ~~4.6~~5.6, and Regulatory Guide 1.75, which endorses IEEE-384. Class 1E circuits and Class 1E-associated circuits are identified and separated from redundant and non-Class 1E circuits. Isolation devices are provided in the design where an interface exists between redundant Class 1E divisions and between non-Class 1E and Class 1E or Class 1E-associated circuits. Independence and separation of safety-related systems is discussed in ~~Subsections 8.3.1.3 and 8.3.1.4~~ Subsection 8.3.3.6.2*.*

Physical and electrical independence of the instrumentation devices of the system is provided by channel independence for sensors exposed to each process variable. Separate and independent raceways are routed from each device to the respective~~remote multiplexing units (RMUs)~~ I/O devices*. Each ~~channel~~*division *has a separate and independent control room panel. Trip logic outputs are separated in the same manner as are the channels. Signals between redundant RPS divisions are electrically and physically isolated by Class 1E isolators or by fiber optic cables.*

7.2.2.2.3.1 IEEE-~~279~~603, ~~Protection~~Standard Criteria for Safety Systems for Nuclear Power Generating Stations

STD DEP T1 2.3-1

STD DEP 1.8-1

STD DEP T1 3.4-1

STD DEP 7.6-1

STD DEP Admin

The Reactor Protection (trip) System conforms to the requirements of this standard. The following is a detailed discussion of this conformance.

*(1) General Functional Requirement (~~Paragraph 4.1~~*Section 5)

(2) *Single-Failure Criterion (~~Paragraph4.2~~*Section 5.1)

(3) Quality of Components and Modules (*~~Paragraph 4.3~~*Section 5.3*)*

(4) *Equipment Qualification (~~Paragraph 4.4~~*Section 5.4*)*

(5) *~~Channel~~* System *Integrity (~~Paragraph 4.5~~*Section 5.5*)*

(6) *~~Channel~~ Independence (~~Paragraph 4.6~~*Section 5.6*)*

(7) *Control and Protection System Interaction (~~Paragraph 4.7~~*Section 6.3*)*

(8) *Derivation of System Inputs (~~Paragraph 4.8~~*Section 6.4*)*

The following RPS trip variables are direct measures of a reactor overpressure condition, a reactor overpower condition, a gross fuel damage condition, or abnormal conditions within the reactor coolant pressure boundary:

(a) *Reactor vessel low water level* (Level 3) *trip*

(b) *~~Main steamline high radiation trip~~* Not Used

(c) *(c) Neutron monitoring (APRM) system trip*

(i) *Neutron flux trip*

(ii) *Simulated thermal power*

(iii) OPRM trip

(iv) Reactor core flow rapid coastdown

(v) APRM inoperative

(vi) OPRM inoperative

(d) *Neutron Monitoring (SRNM) System trip*

(i) *Neutron flux trip*

(ii) *Short neutron flux period*

(iii) *~~Channel~~*SRNM *inoperative*

(9) *Capability for Sensor Checks (~~Paragraph 4.9~~*Section 5.7*)*

(10) *Capability for Test and Calibration (~~Paragraph 4.10~~*Section 6.5*)*

Most sensors have a provision for actual testing and calibration during reactor operation. The exceptions are defined as follows:

(b) Not Used ~~*Testing of the main steamline high-radiation monitors can be performed during full power operation by cross-comparison of sensors. Calibration of the electronics portion of each channel can be performed during reactor operation by switching in a current source in place of the normal signal from the sensor. Calibration of the sensor itself can be performed during shutdown.*~~

*(11) Channel Bypass or Removal from Operation (~~Paragraph 4.11~~*Section 6.7*)*

*(12) Operating Bypasses (~~Paragraph 4.12~~*Section 6.6*)*

The following RPS trip variables have no provision for an operating bypass:

(a) Reactor vessel low water level (Level 3) *trip*

(b) ~~*Main steamline high radiation trip*~~ Not Used

*An operating bypass of the low ~~RCS~~*CRD *accumulator charging pressure trip is provided in the control room for the operator to bypass the trip outputs during SHUTDOWN and REFUEL modes of operation. Control of this bypass is achieved with bypass switches through administrative means. Its only purpose is to permit reset of the RPS following reactor scram because the low charging water pressure condition would persist until the scram valves are reclosed. The bypass is manually initiated and must be manually removed (via switches or placing the mode switch in STARTUP) to commence withdrawal of control rods after a reactor shutdown.*

*(13) Indication of Bypasses (~~Paragraph 4.13~~*Section 5.8.3*)*

*(14) Access to Means for Bypassing (~~Paragraph 4.14~~*Section 5.9*)*

*(15) Multiple Setpoints (~~Paragraph 4.15~~*Section 6.8.2*)**

*The trip setpoint of each SRNM channel is generally fixed. However, there is also the scram initiated by intermediate high neutron flux level corresponding to 5E + 5 counts per second. This is only activated in a noncoincidence scram mode by a switch in the ~~RPS~~*NMS *SSLC cabinet. The conditions under which such trip is to be activated are included in plant operating procedures.*

*(16) Completion of Protective Action Once it is Initiated (~~Paragraph 4.16~~*Section 7.3*)*

*(17) Manual Actuation (~~Paragraph 4.17~~*Section 7.2*)*

*(18) Access to Setpoint Adjustments, Calibration, and Test Points (~~Paragraph 4.18~~*Section 5.9*)*

(19) Identification of Protective Actions (~~Paragraph 4.19~~Section 5.8.2)

When any manual scram pushbutton is depressed, a main control room annunciation is initiated and a ~~process computer system~~PCF record is produced to identify the tripped RPS trip logic.

Identification of the mode switch in shutdown position scram trip is provided by the ~~process computer system~~PCF trip logic identification ~~printout~~record, the mode switch in shutdown position annunciator, and all division trips.

(20) Information Readout (~~Paragraph 4.20~~Sections 5.8 and 5.14)

(21) System Repair (~~Paragraph 4.21~~Section 5.10)

(22) Identification of Protection Systems (~~Paragraph 4.22~~Section 5.11)

The RPS logic is housed, along with that of the essential core cooling systems and the leak detection and isolation systems, in the reactor trip and isolation system (RTIS) cabinets of *safety system logic and control (SSLC)* system*~~cabinets~~. There are four distinct and separate cabinets in accordance with the four electrical divisions. Each division is uniquely identified by color code including cables and associated cables. The SSLC cabinets themselves are clearly marked with the words "~~Safety System Logic and Control~~*Reactor Trip and Isolation System*". Each of the component systems controls is clearly identified on the cabinets in accordance with their system grouping and labeling. Control room panels are identified by tags on the panels which indicate the function and identify the contained logic channels. Redundant racks are identified by the identification marker plates of instruments on the racks.*

7.2.2.2.4 Conformance to Branch Technical Positions

STD DEP 1.8-1

STD DEP Admin

(4) BTP-ICSB-26: Requirements for Reactor Protection System Anticipatory Trips

All hardware components *used to provide trip signals to the RPS ~~is~~are designed in accordance with IEEE-~~279~~603 and ~~is~~are considered safety-related. This includes the sensors for turbine stop valve closure and turbine control valve fast closure even though these are located in the non-seismic Turbine Building. Since reactor high pressure and power trips are diverse to the turbine scram variables, locating the sensors in the turbine enclosure does not compromise the ability of the RPS to provide protection action when required.*

Table 7.2-1 Reactor Protection System Instrumentation Specifications

Reactor vessel high pressure	~~*0–10.3*~~ **0-10.0** MPa G	Pressure-transmitter/trip module
Drywell high pressure	~~*0–0.036 MPaG*~~ **15.0 - 30.0 kPaG**	Pressure-transmitter/trip module
Reactor vessel low water Level 3	~~*0–0.033 MPa G*~~ **0 - 1800 mm**	Level-transmitter/trip module
~~*Low charging pressure to rod HCU accumulators*~~**CRD charging header pressure High**	~~*0–245.2*~~ **0-20.0** MPa G	Pressure transmitter/ trip module
Turbine stop valve closure	Fully open to fully closed	Position switch
Turbine control valve fast closure	0–10.98 MPa G	Pressure-switch
Main steamline isolation valve closure	Fully open to fully closed	Position-switch
Neutron Monitoring System	APRM or SRNM Trip/No Trip	See Section 7.6
~~*Main steamline high radiation*~~	~~*0.01–10^{4}mGy/h*~~	~~*Gamma detector*~~
High suppression pool temperature	~~*4 to 110°C*~~**0 to 150°C**	Temperature-transmitter/trip module
Turbine first-stage pressure	**0 - 6 MPaG**	Pressure-transmitter/ trip module

Table 7.2-2 Channels Required for Functional Performance of RPS

This table shows the number of sensors required for the functional performance of the reactor protection system.	
Channel Description	**# Sensors**
Reactor vessel low level **(Level 3)**	*4*
~~*Main steamline radiation*~~	~~*4*~~

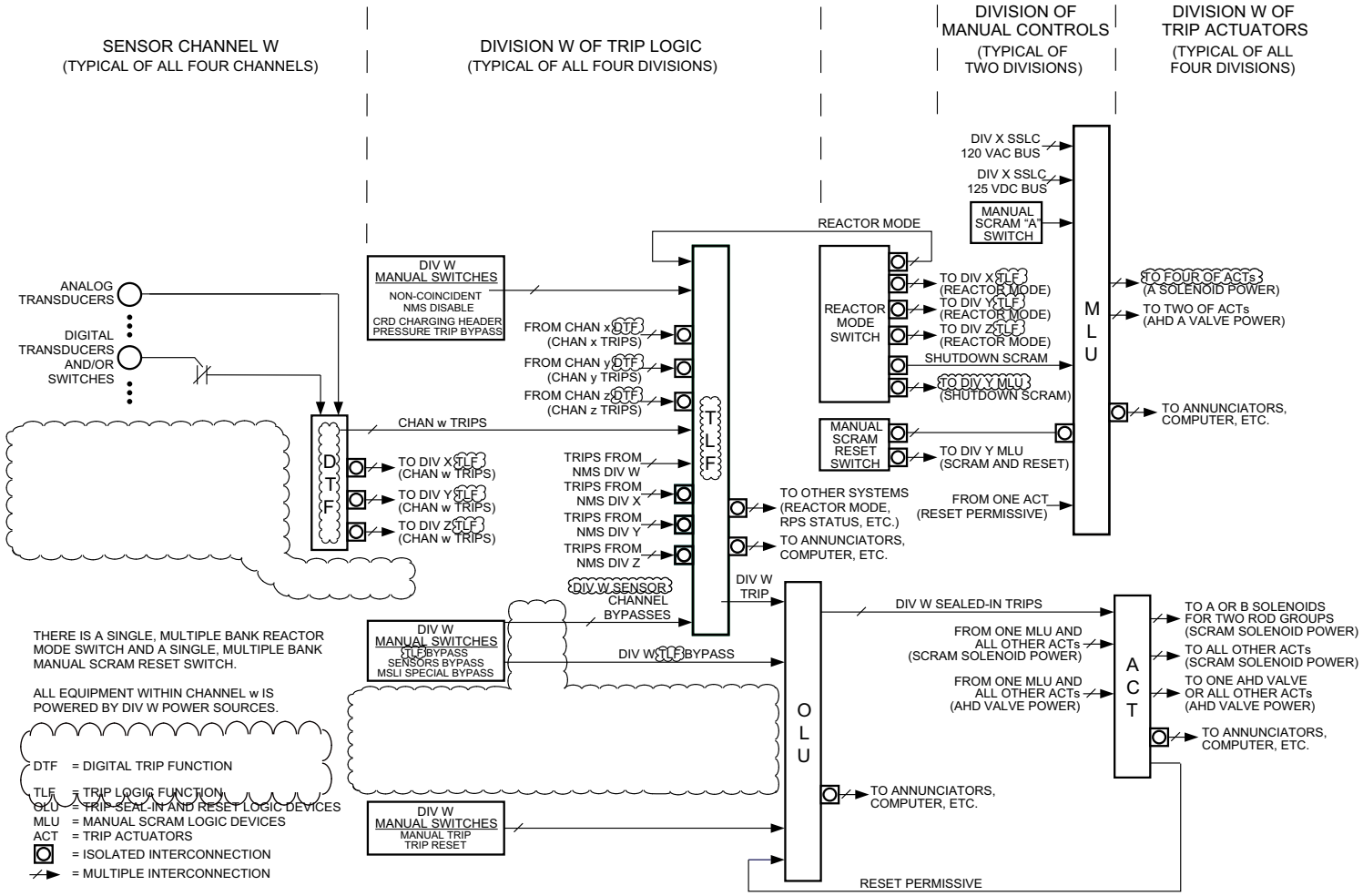

Figure 7.2-2 Reactor Protection System Equipment Arrangement (From Sensors Through Trip Actuators)

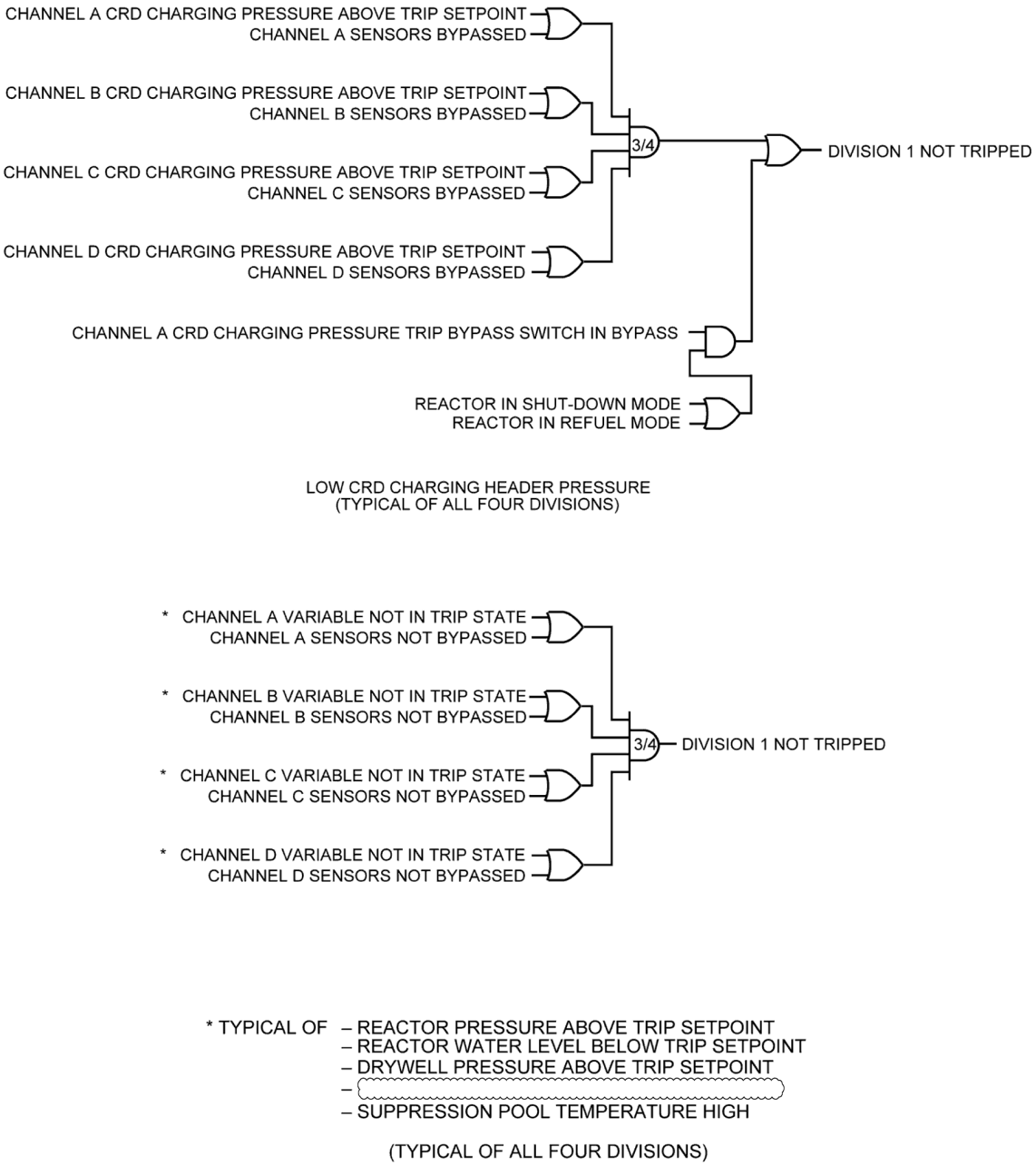

Figure 7.2-6 Division 1 Trip Logic

The following figures are located in Chapter 21:

- **Figure 7.2-9 (Sheets 1-3, 5, 6)**
- **Figure 7.2-10 (Sheets 1, 2, 11-22, 39-42, 47-54, 69, 71)**

7.3 Engineered Safety Feature Systems, Instrumentation and Control

The information in this section of the reference ABWR DCD, including all subsections and figures, is incorporated by reference with the following departures and supplements.

STD DEP T1 2.3-1 (Figure 7.3-5)

STD DEP T1 2.4-1 (Figure 7.3-4)

STD DEP T1 2.4-2

STD DEP T1 2.4-3 (Figures 7.3-3, 7.3-4)

STD DEP T1 2.14-1 (Figures 7.3-4, 7.3-5)

STD DEP T1 3.4-1 (Figures 7.3-1, 7.3-2, 7.3-3, 7.3-5)

STP DEP 1.1-2

STD DEP 1.8-1

STD DEP 7.1-1

STD DEP 7.3-1 (Figure 7.3-1)

STD DEP 7.3-2

STD DEP 7.3-4 (Figure 7.3-2)

STD DEP 7.3-5

STD DEP 7.3-6 (Figure 7.3-2)

STD DEP 7.3-7 (Figure 7.3-7)

STD DEP 7.3-9

STD DEP 7.3-10 (Figures 7.3-1, 7.3-4)

STD DEP 7.3-11

STD DEP 7.3-12

STD DEP 7.3-13 (Figure 7.3-4)

STD DEP 7.3-14 (Figure 7.3-4)

STD DEP 7.3-15

STD DEP 7.3-16

STD DEP 7.3-17

STD DEP 7.7-2

STD DEP Admin (Figure 7.3-5)

7.3.1 Description

7.3.1.1 System Descriptions

STD DEP 1.8-1

This subsection describes the instrumentation and controls for the various engineered safety features (ESF) systems. It provides design basis information as called for by IEEE ~~279~~ 603 and provides reference to system diagrams which are included in the Safety Analysis Report.

7.3.1.1.1.1 High Pressure Core Flooder System Instrumentation and Controls

STD DEP T1 3.4-1

STD DEP 7.1-1

STD DEP 7.3-1

STD DEP Admin

(2) Supporting Systems (Power Supplies)

Supporting systems for the HPCF I&C consist only of the instrumentation, logic and motive power supplies. The controls instrumentation and logic power is obtained from the ~~SSLC~~ Class 1E 125 VDC *~~Division 2 and 3, 120 VAC UPS~~ buses (Section 8.3). The logic power is as described in Section 7.2 for the ~~RPS portion of the SSLC~~* Reactor Trip and Isolation System (RTIS)*.*

(3) Equipment Design

(a) ~~(w)~~Initiating Circuits

Reactor vessel ~~low~~ water level is monitored by four level transmitters (one in each of the four electrical divisions) that sense the difference between the pressure due to a constant reference leg of water and the pressure due to the actual height of water in the vessel. Each level transmitter provides an input to ~~local multiplexer units which perform signal conditioning and~~ a remote digital logic controller (RDLC) for *analog-to-digital conversion. The formatted, digitized sensor input is* transmitted *with other sensor signals over an optical fiber data link to the logic processing units in the main control room. All four transmitter signals are fed into the two-out-of-four logic for each of the two divisions (II & III). The initiation logic for HPCF sensors is shown in Figure 7.3-1.*

The HPCF System is initiated on receipt of a reactor vessel low water level signal (Level 1.5) or drywell high-pressure signal from the trip logic. The HPCF System reaches its design flow rate ~~within 36 seconds of receipt of initiation signal~~ in a time interval consistent with Table 6.3-1*. Makeup water is discharged to the reactor vessel until the reactor high water level is reached. The HPCF System then automatically stops flow by closing the injection valve if the high water level signal is available.*

(d) Redundancy and Diversity

The following standard supplement provides reference to additional information.

For additional diverse HPCF features to mitigate potental common-mode failure conditions, see the discussion in Subsection 7C.5.

(e) Actuated Devices

The HPCF valves must be opened sufficiently to provide design flow rate within ~~36 seconds from receipt of the initiation signal~~ the time interval consistent with Table 6.3-1.

(f) Separation

Separation within the ECCS is such that no single design basis event, in conjunction with an additional single failure, can prevent core cooling when required. Control and electrically driven equipment wiring is segregated into three separate electrical divisions, designated I, II and III (Figure 8.3-1). Initiation sensor inputs are from all four divisions. *HPCF is a two-division system utilizing Divisions II and III. HPCF control logic, cabling, manual controls and instrumentation are arranged such that divisional separation is maintained. System separation and diesel loading are shown in Table 8.3-1.*

(g) Testability

The high-pressure core flooder (HPCF) instrumentation and control system is capable of being tested during normal unit operation to verify the operability of each system component. Testing of the initiation transmitters which are located outside the drywell is accomplished by valving out each transmitter, one at a time, and applying a test pressure source. This verifies the operability of the transmitter, as well as the calibration range. The analog sensor inputs are calibrated at the analog inputs of the ~~remote~~ ~~multiplexing units~~ RDLCs. With a division-of-sensors bypass in place, calibrated, variable signals are injected in place of the sensor signals and monitored at the ~~SSLC~~ ELCS *control room panels for linearity, accuracy, fault response, and downscale and upscale trip response.*

Testing for functional operability of the control logic is accomplished ~~by means of continuous automatic self-testing. The automatic system selftest~~ as discussed in Subsection 7.1.2.1.6 ~~is also applicable for HPCF~~.

(i) Operational Considerations

*~~See Chapter 16 for setpoints and margins.~~*Chapter 16 describes the methods for calculating setpoints and margins.

(j) Parts of System Not Required for Safety

The non-safety-related portions of the HPCF System include the annunciators and the plant *computer* functions (PCFs)*. Other instrumentation considered non-safety-related are those indicators which are provided for operator information but are not essential to correct operator action.*

7.3.1.1.1.2 Automatic Depressurization Subsystem Instrumentation and Controls

STD DEP T1 3.4-1

STD DEP 7.1-1

STD DEP 7.3-2

STD DEP 7.3-4

STD DEP 7.3-5

STD DEP 7.3-6

STD DEP 7.3-7

STD DEP 7.3-16

STD DEP 7.7-2

STD DEP Admin

(1) System Identification

Automatic safety/relief valves (SRVs) are installed on the main steamlines inside the drywell. The valves can be actuated in two ways: (1) ~~they will relieve pressure by actuation with electrical power~~ by pneumatic action *or (2) by mechanical actuation without power. The suppression pool provides a heat sink for steam relieved by these valves. Relief valve operation may be controlled manually from the control room to hold the desired reactor pressure. Eight of the SRVs are designated as Automatic Depressurization Subsystem (ADS) valves and are capable of operating from either ADS logic*

or safety/relief logic signals. The safety/relief logic is discussed in Paragraph (4). Automatic depressurization by the ADS is provided to reduce the pressure during a loss-of-coolant accident in which the HPCF and RCIC Systems are unable to restore vessel water level. This allows makeup of core cooling water by the low pressure makeup system (RHR/LP flooding mode).

(3) Equipment Design

The ADS accumulators are sized to operate the SRV one time at drywell design pressure or five times at normal drywell pressure, following failure of the pneumatic supply to the accumulator. Sensors provide inputs to ~~local multiplexer units which perform signal conditioning and~~ an RDLC for *analog-to-digital conversion. The formatted, digitized sensor inputs are ~~multiplexed~~* transmitted *with other sensor signals over an optical data link to the logic processing units in the main control room. All four transmitter signals are fed into the two-out-of-four logic for each of two divisions, either of which can actuate the ADS. Station batteries and ~~SSLC~~* ELCS *power supplies energize the electrical control circuitry. The power supplies for the redundant divisions are separated to limit the effects of electrical failures. Electrical elements in the control system energize to cause the relief valves to open.*

(b) Logic and Sequencing

Two parameters of initiation signals are used for the ADS: drywell high pressure and reactor vessel ~~low-low~~ water below *~~level (~~Level 1~~)~~* or reactor vessel water below Level 1 alone after a time delay. *Two-out-of-four of each set of signals must be present throughout the timing sequence to cause the SRVs to open. Each parameter separately seals itself in and annunciates following the two-out-of-four logic confirmation. ~~Low~~ Water Level 1 is the final sensor to initiate the ADS.*

After receipt of the initiation signals and after a delay provided by time delay elements, each of the two solenoid pilot gas valves is energized. This allows pneumatic pressure from the accumulator to act on the gas cylinder operator. The gas cylinder operator opens and holds the relief valve open. Lights in the main control room indicate when the ~~solenoid-operated pilot valves are~~ gas cylinder operator is *~~energized to~~ open*ed or closed for *a safety/relief valve. ~~Linear variable differential transformers (LVDTs)~~* Limit switches *mounted on the* gas cylinder *~~valve~~ operators verify each valve position to the ~~Performance Monitoring and Control System (PMCS)~~* plant computer function (PCF)*, and the annunciators.*

Manual reset circuits are provided for the ADS initiation signal and the two parameter sensor input logic signals. An attempted reset has no effect if the two-out-of-four initiation signals are still present from each parameter (high drywell pressure and ~~low-low~~ reactor water level below Level 1*). However, ~~a keylocked~~* an *inhibit switch is provided for each*

division which can be used to take one ADS division out of service for testing or maintenance during plant operation. This switch is ineffective once the ADS timers have timed out and thus cannot be used to abort and reclose the valves once they are signalled to open. The inhibit mode is continuously annunciated in the main control room.

For anticipated transient without scram (ATWS) mitigation, the ADS has an automatic and manual inhibit of the automatic ADS initiation. Automatic initiation of ADS is inhibited ~~unless there is a coincident low reactor water level signal and an average power range monitors (APRMs) ATWS permissive signal~~ whenever potential ATWS conditions exist as indicated by APRMs not being down scale*. There are main control room switches for the manual inhibit of automatic initiation of ADS.*

(c) Bypasses and Interlocks

There is one manual ADS inhibit switch in the control room for each ADS logic and control division which will inhibit ADS initiation, if ADS has not initiated. The primary purpose of the inhibit switch is to remove one of the two ADS logic and control divisions from service for testing and maintenance during plant operation. The ADS is interlocked with the HPCF and RHR Systems by means of pressure sensors located on the discharge of these pumps. Manual ADS bypasses the timers and immediately opens the ADS valves, provided the ECCS pump(s) running permissives are present. The ~~rotating collar permissives and duality of button sets~~ need to rotate the collar before depressing the pushbutton*, combined with annunciators, assure manual initiation of ADS to be a deliberate act.*

(d) Redundancy and Diversity

The ADS is initiated by high drywell pressure and/or ~~low~~ reactor vessel water below *~~level~~* Level 1*. The initiating circuits for each of these parameters are redundant as described by the circuit description of this section. Diversity is provided by the HPCF ~~System~~* and RCIC Systems.

(f) Separation

Separation of the ADS is in accordance with criteria stated in Section 7.1. ADS is a Division I (ADS 1) and Division II (ADS 2) system, except that only one set of relief valves is supplied. Each ADS relief valve can be actuated by any one of three solenoid pilot valves supplying nitrogen gas to the relief valve gas piston operators. One of the ADS solenoid pilot valves is operated by Division I logic and the other by Division II logic. The third solenoid pilot is used for non-ADS operation. The non-ADS SRV function solenoid pilot valves are powered from Division I, II or III Class 1E DC bus. *Control logic manual controls and instrumentation are mounted so that Division I and Division II*

separation is maintained. Separation from Divisions III and IV is likewise maintained.

(g) Testability

The ADS has two complete control logics, one in Division I and one in Division II. Each control logic has two circuits, both of which must operate to initiate ADS. Both circuits contain time delay logic to give the HPCF System an opportunity to restore water level. The ADS instrument channels signals are verified by cross comparison between the channels which bear a known relationship to each other. Indication for each instrument channel is available on displays associated with the ~~SSLC~~ ELCS*. ~~The logic is tested continuously by automatic self-test circuits. The STS (~~*SSLC testing, as described in *the sixth test~~)~~, discussed in ~~RPS testability (~~Subsection 7.1.2.1.6~~)~~ is also applicable here for the ADS. The instrument channels are* manually verified in accordance with Technical Specification requirements*~~automatically verified every ten minutes~~.Testing of ADS does not interfere with automatic operation if required by an initiation signal. The pilot solenoid valves can* also *be tested ~~when the reactor is not pressurized~~.*

(h) Environmental Considerations

The signal cables, solenoid valves, SRV operators and accumulators, and RV ~~low~~ water level instrument lines are the only essential I&C equipment for the ADS located inside the drywell. These items will operate in the most severe environment resulting from a design basis LOCA (Section 3.11). Gamma and neutron radiation is also considered in the selection of these items. Equipment located outside the drywell (viz., the RPV level and DW pressure transmitters and ~~multiplex~~ data communication *interfaces) will also operate in their normal and accident environments.*

(i) Operational Considerations

A temperature element is installed on the SRV discharge piping several feet from the valve body. The temperature element provides input to ~~a multipoint recorder and interfaces with~~ the ~~PMCS computer~~ historian function *in the control room to provide a means of detecting SRV leakage during plant operation. When the temperature in any SRV discharge pipeline exceeds a preset valve, an alarm is sounded in the main control room. The alarm setting is enough above normal rated power drywell ambient temperatures to avoid spurious alarms, yet low enough to give early indication of SRV leakage.*

*~~Refer to Chapter 16 for setpoints and margin.~~*Chapter 16 describes the methods for calculating setpoints and margins.

(j) Parts of System Not Required for Safety

The non-safety-related portions of the ADS include the annunciators and the ~~computer~~PCF. Other instrumentation considered non-safety-related are those indicators which are provided for operator information, but are not essential to correct operator action.

7.3.1.1.1.3 Reactor Core Isolation Cooling (RCIC) System—Instrumentation and Controls

STD DEP T1 2.4-3

STD DEP T1 3.4-1

STD DEP 7.1-1

STD DEP Admin

(3) Power Sources

The RCIC System is primarily *powered by the Division I 125 VDC system*. *~~except,~~* Exceptions include *~~for the isolation valves for steam supply.~~* the *~~Inboard~~* inboard *isolation valves* (including the steam line warm-up valve) which *are powered by 480 VAC Division I and* the *outboard* steam supply isolation valve is *~~valves are~~ powered by 125 VDC Division II.* The logic power is as described in Section 7.1 for ELCS.

(4) Equipment

When actuated, the RCIC System pumps demineralized water from the condensate storage tank to the reactor vessel. The suppression pool provides an alternate source of water. The RCIC System includes a 100% capacity steam-driven turbine which drives a 100% capacity pump assembly, turbine and pump accessories, piping, valves, and instrumentation necessary to implement several flow paths. The arrangement of equipment and control devices is shown in Figure 5.4-8 (RCIC P&ID).

Level ~~transducers~~ transmitters *used for the initiation and* stopping RCIC *~~tripping and pressure transducers for isolation of the RCIC System~~ are provided by the Nuclear Boiler System and are shared by other system channels within each division.* High drywell pressure signals are provided by the Nuclear Boiler System and are also shared by other system channels within each division. *~~They~~* These *are located ~~on instrument panels~~ outside the drywell but inside the ~~containment~~* Reactor Building*. The only operating components of the RCIC System that are located inside the drywell are the inboard steamline isolation valve and the steamline warmup line isolation valve.*

The rest of the RCIC System normal I&C components are located in the Reactor Building. Cables connect the sensors ~~(via the multiplexed optical data links described in Appendix 7A)~~ (via the Essential Communication Function) *to control circuitry in the main control room. ~~Control system details are shown in Figure 7.3-3.~~*

A design flow functional test of the RCIC System may be performed during normal plant operation by drawing suction from the suppression pool and discharging through a full flow test return line to the suppression pool. The discharge valve to the reactor vessel remains closed during the test and reactor operation remains undisturbed. All components of the RCIC System are capable of individual functional testing during normal plant operation. Control system decisions will provide automatic return from test to operating mode if RCIC System initiation is required. There are ~~three~~ two *exceptions:*

(i) *~~The flow controller in manual mode. This feature provides operator flexibility during system operation.~~* Not used

(ii) *Steam inboard/outboard isolation valves* are *closed. Closure of either or both requires operator action to properly sequence their opening ~~(an alarm sounds when either of these valves leaves the fully open position)~~.*

(iii) *Breakers have been manually racked out of service. This condition is indicated in the main control room.*

(a) *Initiating Circuits*

The RCIC System is initiated upon receipt of a high drywell pressure signal or a reactor vessel low water ~~level~~ Level 2 *signal. High drywell pressure is monitored by four shared pressure transmitters (one from each division) in the Nuclear Boiler System. Reactor vessel low water level is monitored by four shared level ~~transducers~~* transmitters *(one from each of the four electrical divisions) in the NBS that sense the pressure difference between a constant reference leg of water and the actual height of water in the vessel.*

Each ~~transducer~~ transmitter *supplies a signal ~~to a local multiplexer unit which performs signal conditioning and~~* for *analog-to-digital conversion ~~(Appendix 7A)~~. The formatted, digitized sensor inputs are ~~multiplexed~~* transmitted *with other sensor signals over an optical data link to the logic processing units in the main control room. All four transmitter signals are fed into the two-out-of-four logic for RCIC initiation.*

The sensing lines for the ~~transducers~~ transmitters *are physically separated from each other and tap off the reactor vessel at each of the four quadrants of the containment structure associated with the appropriate electrical divisions.*

The RCIC System is initiated automatically after receipt of either of the two parameters just described and produces the design flow rate ~~within 30 seconds~~ in a time interval consistent with Table 6.3-1*. The system then functions to provide design makeup water flow to the reactor vessel until the amount of water delivered to the reactor vessel is adequate to restore vessel level. The RCIC turbine will shut down automatically upon receipt of high reactor water level* 8 *(two- out-of-four). The controls are arranged to allow manual startup, operation, and shutdown.*

The RCIC turbine is functionally controlled ~~as shown in Figure 7.3-3 (RCIC IBD)~~ by an internal turbine flow controller*. The turbine governor limits the turbine speed and adjusts the turbine steam ~~control valve~~* inlet *so that design pump discharge flow rate is obtained. The flow signal used for automatic control of the turbine is derived from a differential pressure measurement ~~across a flow element in the RCIC System pump discharge line~~* within the turbine. All flow controls are internal to the combined turbine pump*.*

The turbine is automatically shut down by tripping the turbine and closing the throttle valve if any of the following conditions are detected:

(i) Turbine overspeed

(ii) High turbine exhaust pressure

(iii) RCIC auto-isolation signal

(iv) Low pump suction pressure

(v) Reactor vessel high water level (Level 8)

(vi) Manual trip ~~actuated~~ activated *by the operator ~~(provided auto-initiating signal is not present)~~*

Turbine overspeed indicates a malfunction of the turbine control mechanism. High turbine exhaust pressure indicates ~~a~~ an *~~condition that threatens the physical integrity of~~* obstruction in *the exhaust line. Low pump suction pressure warns that cavitation and lack of cooling can cause damage to the pump which could place it out of service. ~~A turbine trip~~* RCIC shutdown *is initiated for these conditions so that if the causes of the abnormal conditions can be found and corrected, the system can be quickly restored to service. Turbine overspeed is* first *detected by ~~a standard turbine~~* an electrical overspeed sensor, and secondly by a throw-out pin *overspeed mechanical device. ~~Four pressure sensors are used to detect high~~* High *turbine exhaust pressure~~; any one sensor~~ can initiate turbine shutdown. ~~One~~* Two *pressure ~~sensor is~~* sensors can be *used to detect low RCIC System pump suction pressure* (only one of

these need to function since the logic is structured such that one can be in calibration at any time).

RCIC is automatically isolated on detection of high steam flow or high temperature in the RCIC room. Either of these is an indication of a steam line leak or break.

High water level in the reactor vessel indicates that the RCIC System has performed satisfactorily in providing makeup water to the reactor vessel. ~~*Further*~~ A further *increase in level could result in* steam line ~~*RCIC System turbine*~~ *damage caused by gross carryover of moisture. The reactor vessel high water level* 8 *setting which* ~~*trips*~~ stops *the turbine is* below the bottom of the Main Steam Line (MSL) ~~*near the top of the steam separators*~~ *and is selected to prevent* ~~*gross moisture carryover to the turbine*~~ overflow into the MSLs*. Four shared level transmitters from the Nuclear Boiler System which sense differential pressure are arranged in two-out-of-four logic to initiate a turbine shutdown. However, should a subsequent low level signal recur, the RCIC System will automatically restart.* ~~*See Chapter 6 (activated devices) for discussion of auto isolation logic.*~~

(b) Logic and Sequencing

The scheme used for initiating the RCIC System is shown in Figure 7.3-3 (RCIC IBD). RCIC initially starts on the sensing of either a low water level (Level 2) signal or a high drywell pressure signal. This initiates a sequence of valve openings and a RCIC turbine ramp rate which results in rated flow to the reactor vessel in a time interval consistent with Table 6.3-1.

About 5 seconds after the initiation signal is received, the RCIC steam admission valve opens. The RCIC turbine controller controls the flow ramp rate to rated flow to the reactor vessel.

(c) Bypasses and Interlocks

To prevent the turbine/pump from being damaged by overheating at reduced RCIC pump discharge flow, a pump minimum flow bypass is provided to route the water discharged from the pump back to the suppression pool.

The minimum flow bypass is controlled by an automatic DC motor-operated valve. The control scheme is shown in Figure 7.3-3 (RCIC IBD). The valve is automatically closed at high flow or when either the steam admission *supply* valve *or turbine trip* ~~*valve*~~ valves *are closed. Low flow, combined with high pump discharge pressure, opens the valve.*

To prevent the RCIC steam supply pipeline from filling up with water ~~and cooling excessively~~, a condensate drain pot, steamline drain, and appropriate valves are provided in a drain pipeline arrangement just upstream of the turbine supply valve. ~~The controls position valves so that,~~ ~~during~~ During *normal operation, steamline drainage is routed to the main condenser.The water level in the steamline drain condensate pot is controlled by a* steam trap. If above normal condenstation occurs, as is typical during initial steam line warm up a *level switch and a direct acting solenoid valve ~~which~~ energizes to allow condensate to flow out of the drain pot*, bypassing the normal steam trap. This condition is alarmed in the MCR. *Upon receipt of an RCIC initiation signal and subsequent opening of the steam* admission *supply* valve*, ~~the~~* this *drainage path is shut off by redundant valves.*

To prevent the turbine exhaust line from filling with water, a condensate drain pot is provided to route the turbine exhaust line to a drain tank*. ~~The water in the turbine exhaust line condensate drain pot is routed to the clean radwaste system.~~ RCIC initiation and subsequent opening of the steam* admission *supply valve causes the ~~condensate~~* exhaust *drainage line to be shut off by redundant valves.*

*During ~~test~~*Full Flow Test Mode *operation, the RCIC pump discharge is routed to the suppression pool. Two DC motor-operated valves are installed in the pump discharge to the suppression pool pipeline. The piping arrangement is shown in Figure 5.4-8 (RCIC P&ID). Upon receipt of an RCIC initiation signal* while in the Full Flow Test Mode*, the* RCIC pump discharge *valves* and CST suction valve *close* and the suction remains aligned to the suppression pool during this transition to the Vessel Makeup Mode. The RCIC pump suction may be remotely realigned to the CST, *as shown in Figure 7.3-3 (RCIC IBD). ~~The pump suction from the condensate storage pool is automatically closed or interlocked closed if the suppression pool suction valve is fully open.~~ Various indications pertinent to the operation and condition of the RCIC System are available to the main control room operator. Figure 7.3-3 (RCIC IBD) shows the various indications provided.*

(d) Redundancy and Diversity

On a network basis, the HPCF System is redundant and diverse to the RCIC System for the ECCS and safe shutdown function. Therefore, the RCIC System, as a system by itself, is not required to be redundant or diverse, although the instrument channels are redundant for operational availability purposes.

The RCIC System is actuated by high drywell pressure or by reactor low water level (Level 2)*. Four NBS sensors monitor each parameter and combine in two sets of two-out-of-four logic signals in the ~~safety system logic and control (SSLC)~~* ESF Logic and Control System (ELCS)*. A*

permissive signal from either set initiates the RCIC System. The sensor outputs themselves are shared by other systems in common with each division ~~(see NBS P&ID Figure 5.1-3)~~.

(e) Actuated Devices

All automatic valves in the RCIC System are equipped with remote manual test capability so that the entire system can be operated from the control room. Motor-operated valves are equipped with limit and torque switches. Limit switches turn off the motors when movement is complete. In the closing direction, torque switches turn the motor off when the valve has properly seated. Thermal overload devices are used to trip motor-operated valves during testing only. (for more information on valve testing, see Subsection 3.9.3.2) All motor-operated and air- operated valves provide control room indication of valve position. ~~The system~~ RCIC *is capable of initiation independent of AC power.*

To assure that the RCIC System can be brought to design flow rate ~~within 30 seconds~~ in an time interval consistent with Table 6.3-1 *from receipt of the initiation signal, the following maximum operating times for essential RCIC valves are provided by the valve operation mechanisms:*

— *RCIC turbine steam* admission *supply valve: 15 s*

— *RCIC pump discharge valves: 15 s*

— *RCIC pump minimum flow bypass valve: ~~15~~*5 *s*

The operating time is the time required for the valve to travel from the fully-closed to the fully-open position or vice versa. A normally closed steam admission *supply valve is located in the turbine steam supply pipeline just upstream of the turbine stop valve. The control scheme for this valve is shown in Figure 7.3-3 (RCIC IBD). Upon receipt of an RCIC initiation signal this valve opens and remains open until closed by a high water level signal, or by operator action from the main control room.*

Two normally open isolation valves, one inboard and one outboard, are provided in the steam supply line to the turbine. ~~The~~ These *valves automatically close upon receipt of an RCIC isolation signal. The inboard isolation valve has a bypass line with an automatic remotely controlled valve in it. The bypass line is used to equalize and preheat the steamline* to the RCIC steam admission supply valve*.*

The ~~instrumentation~~ signals *for isolation* are provided by the Leak Detection and Isolation System (LDS) and *consists of the following:*

— ***Outboard RCIC turbine isolation valve:***

(i) Ambient temperature sensors—RCIC equipment area ~~B~~ high temperature.

(ii) ~~Main steamline pipe tunnel ambient temperature A or B high.~~ Not used.

(iii) RCIC flow instrument line B break or high flow.

(iv) Two pressure transmitters and trip logic—RCIC turbine exhaust ~~diaphragm (B and F)~~ high pressure. Both trip logic channels must activate to isolate.

(v) Pressure transmitter and trip logic RCIC steam supply pressure low.

(vi) RCIC manual isolation Channel B.

— ***Inboard RCIC turbine isolation valve:***

~~*Except for the suffix notations of A and E replacing B and F, a similar set of instrumentation causes the inboard valve to isolate.*~~ The same set of two-out-of four logic causes the inboard valve to isolate, except manual isolation is a separate control in Division I.

Two pump suction valves are provided in the RCIC System. One valve lines up pump suction from the condensate storage ~~pool~~ tank*, the other one from the suppression pool. The condensate storage ~~pool~~* tank *is the preferred source. The control arrangement is shown in Figure 7.3-3 (RCIC IBD). Upon receipt of an RCIC initiation signal, the normally open condensate storage ~~pool~~* tank *suction valve automatically opens if closed. Condensate storage ~~pool~~* tank *low water level or suppression pool high water level automatically opens the suppression pool suction valve. Full opening of this valve automatically closes the condensate storage ~~pool~~* tank *suction valve.*

One RCIC pump discharge valve and ~~one~~ two *check ~~valve~~* valves *are provided in the pump discharge pipeline. The control scheme for the discharge valve is shown in Figure 7.3-3 (RCIC IBD). This* discharge *valve is arranged to open upon receipt of the RCIC initiation signal and closes automatically upon closure of the turbine ~~trip and throttle~~* stop *valve or* the RCIC *steam* admission *supply valve.*

~~*The auxiliary systems that support the RCIC System are the non-safety-related Gland Subsystem (which prevents turbine steam leakage) and the Lube Oil Cooling Water Subsystem. An RCIC initiation signal activates the vacuum pump of the barometric condenser and opens the cooling water supply valve, thereby initiating the gland seal*~~

~~and lube oil cooling functions. These systems remain on until manually turned off. However, the cooling water supply valve will close automatically on receiving a two-out-of-four high reactor water level signal.~~

(g) Testability

Verification of sensor signals is accomplished by cross comparison between the redundant channels. Each sensor signal is monitored on the ~~SSLC~~ ELCS and Main Control Room (MCR) displays. Additional testing of the initiation sensors which are located outside the drywell may be accomplished by valving out each sensor and applying a test pressure source. This verifies the calibration range in addition to the operability of the sensor. The logic is manually verified in accordance with Technical Specification Requirements ~~tested every 10 minutes by automatic self-test circuits. The automatic self-test system (the sixth test)~~ SSLC testing as discussed in Subsection 7.1.2.1.6 is also applicable here for the RCIC System. ~~With a division of sensors bypass in place, calibrated, variable ramp signals are injected in place of the sensor signals and monitored at the SSLC control room panels for linearity, accuracy, fault response, and downscale and upscale trip response.~~

(6) Operational Considerations

Normal core cooling is required in the event that the reactor becomes isolated from the main condenser during normal operation by a closure of the main steamline isolation valves. Cooling is necessary due to the core fission product decay heat. Steam pressure is relieved through the SRVs to the suppression pool. Under these conditions, ~~The~~ RCIC ~~System~~ maintains reactor water level by providing the makeup water. Initiation and control are automatic.

The following indications are available in the main control room for operator information:

Indication

RCIC steamline supply pressure

RCIC valve (test bypass to suppression pool) position

RCIC pump discharge pressure

RCIC pump discharge flow

~~RCIC pump discharge minimum flow~~

RCIC turbine speed

RCIC turbine exhaust line pressure

~~RCIC turbine exhaust diaphragm pressure~~

~~Indicating Lamps~~

Position of ~~all~~ motor-operated valves

Position of ~~all~~ solenoid-operated valves

Turbine trip

~~Significant sealed-in circuits~~

~~Pump status~~

System status (power, test, isolation)

~~Annunciators~~

Annunciators ~~are provided as shown in the RCIC system IBD (Figure 7.3-3) and the RCIC System P&ID (Figure 5.4-8).~~

(7) Setpoints

The reactor vessel low water Level 2 setting for RCIC System initiation is selected high enough above the active fuel to start the RCIC System in time to prevent the need for the use of the low pressure ECCS. The water level setting is far enough below normal levels that spurious RCIC System startups are avoided ~~(see Chapter 16 for actual setpoints and margin)~~. Chapter 16 describes the methods for calculating the setpoints and margins.

7.3.1.1.1.4 RHR/Low Pressure Flooder (LPFL) Instrumentation and Controls

STD DEP T1 3.4-1

STD DEP 7.3-1

STD DEP 7.3-5

STD DEP 7.3-9

STD DEP 7.3-10

STD DEP Admin

(3) Equipment Design

Motive power for the RHR System pumps is supplied from AC buses that can receive standby AC power. The three pumps are powered from Division I, II, and III ESF buses, which also provide power to the RCIC (Division I) and HPCF (Divisions II and III) Systems. Motive power for the automatic valves

comes from the bus that powers the pumps for that division, except for the special case involving isolation valves. Control power for the LPFL Subsystem components comes from the divisional Class 1E AC buses. Logic power is from the ~~SSLC~~ ELCS power supply for the division involved. Trip channels for the LPFL Subsystem are shown in Figure 7.3-4.

(a) Initiating Circuits

The LPFL Subsystem is initiated automatically on receipt of a high drywell pressure or low reactor water level signal (Level 1), and a low reactor pressure permissive to open the injection valve. The LPFL may also be initiated manually.

Reactor vessel ~~low~~ water ~~level (~~Level 1~~)~~ is monitored by ~~eight~~ four level transmitters from the Nuclear Boiler System (NBS) which are mounted on instrument racks in the drywell. These transmitters sense the difference between the pressure due to a constant reference leg of water and the pressure due to the actual height of water in the vessel. The ~~multi-~~ four ~~division~~ divisions of transmitters are shared with other systems within the respective divisions. ~~Four transmitters provide signals (one from each division) to RHR Divisions I and III. The other four transmitters provide similar signals to RHR Division II.~~

Drywell pressure is monitored by four pressure transmitters from the NBS which are mounted on instrument racks in the containment. These transmitters are also shared with other system channels within the respective divisions. The sensors provide inputs to local ~~multiplexer units~~ RDLCs which perform signal conditioning and analog-to-digital conversion ~~(Appendix 7A)~~. The formatted, digitized sensor inputs are ~~multiplexed~~ transmitted with other sensor signals over an optical data link to the logic processing units in the main control room. The four signals from each parameter are combined, through appropriate optical isolators, in two-out-of-four logic for each division of the RHR/LPFL System. This assures that no single failure event can prevent initiation of the RHR/LPFL Systems. The initiation logic for the RHR System (including LPFL) is shown in Figure 7.3-4.

The LOCA signals (high drywell pressure and below reactor vessel water Level 1) which trigger the initiation logic also initiate starting of the respective division diesel generator.

The LPFL injection valve actuation logic requires a reactor low pressure permissive signal for automatic actuation on reactor ~~low~~ water below ~~(~~Level 1~~)~~ or high drywell pressure. The reactor pressure logic is a two-out-of-four network of shared sensor channels from the NBS and is similar in arrangement to the initiation logic just described.

Manual opening of the injection valve also requires the two-out-of-four reactor low pressure permissive.

(b) Logic and Sequencing

The transmitters which provide the initiation signals are from the NBS and are shared by other I&C system channels in common with each of the four divisions. This facilitates full two-out-of-four initiation logic for all LOCA parameters while utilizing efficient instrumentation. Optical isolators are used to provide proper separation of the electrical divisions. The four drywell pressure sensors supply isolated signals to the separate two-out-of-four logic of all three divisions of the RHR System. ~~Similarly, four water level sensors supply signals to RHR Divisions I and III. However, four different sensors supply the water level signals to RHR Division II.~~ After an initiation signal is received by the LPFL control circuitry, the signal is sealed-in until manually reset. The logic is shown in Figure 7.3-4.

(d) (LPFL) Redundancy and Diversity

The LPFL Subsystem is actuated by reactor vessel ~~low~~ water below ~~level (~~Level 1~~)~~ and/or drywell high pressure. Either or both of these diverse conditions may result from a design basis LOCA and lesser LOCAs.

(e) (LPFL) Actuated Devices

The functional control arrangement for the RHR/LPFL System pumps is shown in Figure 7.3-4. All three pumps start after a ~~10 second~~ time delay, consistent with Table 6.3-1, provided normal or emergency power is available from their divisional sources. However, the diesel load sequence circuitry controls the demand placed on the onsite standby sources of power (Section 8.3). The delay times for the pumps to start when normal AC power is not available include approximately 3 seconds for the start signal to develop after the actual reactor vessel ~~low~~ water below level 1 or drywell high pressure occurs, ~~10 seconds~~ a time delay consistent with Table 6.3-1 for the standby power to become available, and a sequencing delay to reduce demand on standby power. The LPFL Subsystem is designed to provide flow into the reactor vessel within ~~36 seconds~~ the time allowed by Table 6.3-1 of the receipt of the accident signals and the low reactor pressure permissive.

The RHR System pump suction ~~valves~~ valve from the suppression pool ~~are~~ is normally open. Shutdown cooling isolation valves must be closed to permit suction from the Suppression Pool. To reposition the valves, a keylock switch must be turned in the control room. On receipt of an LPFL initiation signal~~, the reactor Shutdown Cooling System (SCS) valves and~~ the RHR test line valves are signaled to close (although they are normally closed) to ensure that the RHR System pump discharge is

correctly routed. ~~Included in this set of valves are the valves that, if not closed, would permit the main system pumps to take suction from the reactor vessel itself (a lineup used during normal SCS operation).~~

(g) Testability

The LPFL I&C equipment is capable of being tested during normal operation. Cross-channel comparison verifies analog transmitter outputs. Drywell pressure and low water level initiation transmitters can be individually valved out of service and subjected to a test pressure. This verifies the calibration range in addition to the operability of the transmitters. The instrument ~~channel trip~~ setpoint is verified by viewing the displays for each instrument *~~automatic self-test functions in the SSLC which simulate programmed trip setpoints and monitor the response~~. The logic is also ~~automatically~~ tested ~~by the self-test system~~* as *described in Subsection 7.1.2.1.6. Other control equipment is functionally tested during normal testing of each loop. Indications in the form of panel lamps and annunciators are provided in the control room.*

(i) Operational Considerations

The pumps, valves, piping, etc., used for the LPFL are used for other operating modes of the RHR System. Initiation of the LPFL mode is automatic and no operator action is required for at least 30 minutes. ~~The operator may control the RHR pumps and injection valves manually after LPFL initiation to use RHR capabilities in other modes if the core is being cooled by other emergency core cooling systems.~~ Other RHR modes may be activated by Mode switches in the MCR. For example to enter the Containment Spray mode, this switch is first “Armed” and then the “Initiate” Push button is pressed. This assures that this is an intentional action by the operator. Also to transfer to these and other RHR Modes, mode specific permissives must be met. This reduces or eliminates the possibility of operator error.

(j) Parts of System Not Required for Safety

*The non-safety-related portions of the LPFL Subsystem include the annunciators and the ~~computer~~*PCF*. Other instrumentation considered non-safety-related are those indicators which are provided for operator information, but are not essential to correct operator action.*

7.3.1.1.2 Leak Detection and Isolation System (LDS)—Instrumentation and Controls

STD DEP T1 2.3-1

STD DEP T1 2.4-2

STD DEP T1 2.4-3

STD DEP T1 3.4-1

STD DEP 7.3-11

STD DEP 7.3-12

STD DEP Admin

(1) System Identification

The instrumentation and control for the Leak Detection and Isolation System (LDS) consists of temperature, pressure, radiation and flow sensors with associated instrumentation and logic used to detect, indicate, and alarm leakage from the reactor primary pressure boundary. In certain cases, the LDS *also initiates closure of isolation valves to shut off leakage external to the containment.*

The MSIV function of LDS is implemented as part of the Reactor Trip and Isolation System (RTIS). All other LDS functions are implemented as part of ELCS.

(2) Supporting System (Power Sources)

~~*All*~~*LDS logic power is supplied by the respective divisional* ~~*SSLC*~~ ELCS *logic power supplies. See Section 8.3 for a description of the* ~~*SSLC*~~ ELCS *logic power supplies.*

The power for the MSIVs pilot solenoid valve control logic is supplied from all four divisions of the ~~*SSLC*~~ RTIS *buses. The MSIVs are spring-loaded, piston-operated pneumatic valves designed to fail closed on loss of electric power or pressure to the valve operator.*

(3) Input Variables and Sensing Methods

(a) RPV Low Water Level

Reactor vessel low water level signals are generated by differential pressure transmitters connected to taps located above and below the water level in the reactor vessel. The transmitters sense the difference between pressure caused by a constant reference leg of water and the pressure caused by the actual water level in the vessel. The ~~*SSLC*~~ ELCS *monitors for low water level and provides trip signals in all four divisions at four different low reactor water levels. The signals are shared systems within the same division (i.e., RPS, ECCS) and are defined as follows:*

(b) ~~*Main Steamline Radiation*~~ Not Used

~~*Main steamline (MSL) radiation is monitored by gamma sensitive radiation monitors in the Process Radiation Monitoring System (Section*~~

~~7.6). The objective of the MSL Radiation Monitoring Subsystem is to monitor for the gross release of fission products from the fuel and, upon indication of such release, initiate appropriate action to limit fuel damage and further release of fission products.~~

~~The process radiation monitor detectors are physically located near the main steamlines just downstream of the outboard MSIVs. The detectors are geometrically arranged to detect significant increases in radiation level with any number of main steamlines in operation.~~

~~When a significant increase in the main steamline radiation level is detected, trip signals are transmitted to the Reactor Protection System (RPS) to indicate reactor trip and to the LDS to initiate closure of all MSIVs and the steamline drain valves.~~

(l) Valve Leakage Monitoring

~~Large remote power-operated valves located in the drywell for the NBS, CUW, RCIC, and RHR Systems are fitted with drain lines from the valve stems. Each drain line is located between two sets of valve stem packing. Leakage through the inner packing is carried to the drywell equipment drain sump. Leakage during hydrotesting may be observed in drain line sight glasses installed in the drain line to the sump. A remote-operated solenoid valve on each line is provided to isolate a leaking line, and may be used during plant operation, in conjunction with the sump instrumentation, to identify the specific process leaking valve.~~

(m) Drywell and Secondary Containment Sump Monitoring

Each sump monitoring system is equipped with two pumps and control instrumentation. The two drywell drain sumps are each equipped with a sonic level element and a level transmitter for monitoring level changes in the sump. The instrumentation provides indication and alarm of excessive fill rate or pumpout frequency of the sumps. The rate at which the drain sump fills with reference to the frequency of sump pump operation determines the leakage rate. The drain sump instrumentation has a sensitivity of detecting reactor coolant leakage of 3.785 L/min within a 60-minute period. Alarm setpoints (nominal values) established at ~~95~~ 114 L/min for floor and equipment drain sumps ~~and~~ (total leakage) to 19 L/min for floor drain sumps and 8 L/min for increase floor drain sump flow within the previous 4 hours. The drywell floor drain sump collects unidentified leakage from such sources as floor drains, valve flanges, closed cooling water for reactor services and condensate from the drywell atmosphere coolers. The drywell equipment drain sump collects identified leakage from known sources.

(r) RCIC Turbine Exhaust Line ~~Diaphragm~~ Pressure Monitors

Pressure ~~between the rupture disc diaphragms~~ in the RCIC System turbine exhaust vent line is monitored by four channels of pressure instrumentation (two in Division I and two in Division II). Both logic channels of Division I trip on high turbine exhaust pressure to close the inboard RCIC isolation valves and trip the turbine. Both logic channels of Division II trip to close the outboard RCIC isolation valve and trip the turbine. The instrumentation channel equipment and piping are provided by the RCIC System as an interface to the LDS.

(w) Feedwater Line Differential Pressure

The LDS monitors the differential pressure to detect a break in the piping. If a confirmatory high drywell pressure signal is also present then a trip of the condensate pumps is initiated.

(5) System Sequencing and Logic

(b) Other Process Line Isolation

After reactor water below Level 1 or high drywell pressure, LDS provides the~~*The*~~ *ATIP System ~~is provided~~ with* an isolation ~~*either low reactor water level or high drywell pressure*~~ *signal to initiate TIP withdrawal followed by closure of the ball valves and purge line valves.*

(7) Redundancy and Diversity

(a) Main Steamline

Redundancy is provided by the instrumentation to monitor each essential variable as follows:

(iii) ~~*Four divisional radiation instrument channels monitor for high MSL radiation in the MSL tunnel area.*~~ Not Used

(d) Reactor Core Isolation Cooling (RCIC)

(ii) Four RCIC turbine exhaust ~~diaphragm~~ pressure monitoring channels (two in each of two divisions).

(13) Parts of System Not Required for Safety

*The non-safety-related portions of the LDS include the circuits that drive annunciators and the ~~computer~~*PCF*. Other instrumentation considered nonsafety-related are those indicators which are provided for operator information.*

7.3.1.1.3 RHR/Wetwell and Drywell Spray Cooling Mode—Instrumentation and Controls

STD DEP T1 3.4-1

STD DEP 7.1-1

STD DEP 7.3-13

STD DEP Admin

(3) Equipment Design

(a) Initiating Circuits

***Drywell Spray B**: Drywell pressure is monitored by four shared pressure transmitters mounted in instrument racks in the containment.*

Signals from these transmitters are routed to the local ~~multiplexer units~~ RDLCs *which convert analog to digital signals and send them through fiber optic links for logic processing in the control room. Any two-out-of-four signals provide the permissive to* manually *initiate the ~~WDSC.~~* Drywell Spray Mode.

Initiation logic for drywell spray B is identical to drywell spray C.

***Wetwell Spray B:** The initiation of wetwell spray* mode *is manual and ~~does not have an interlock~~* can be initiated provided RPV Water Level is above Level 1*. The operator bases judgment on the instrumentation indication of the condition of the wetwell air space temperature.*

Operation of wetwell spray B is identical to wetwell spray C.

(b) Logic Sequencing

Wetwell and or Drywell Spray Modes can be entered separately or by initiating the Containment Spray Mode (which activates both). Most commonly this occurs after LPFL initiation

The operating sequence once either the Containment Spray Mode, Wetwell Spray Mode, or Drywell Spray Mode is selected*~~of wetwell and drywell spray following receipt of the~~* after *LPFL ~~initiating signals~~* initiation *is as follows:*

(i) The RHR pumps ~~are~~ continue *operating.*

(ii) Valves in other RHR modes are automatically repositioned to ~~LPFL injection.~~ the Wetwell / Drywell Spray Modes.

(iii) *The service water ~~emergency~~ pumps ~~are signaled to start~~* continue running*.*

(iv) *Service water supply and discharge valves to the RHR heat exchanger ~~are~~ ~~signaled to~~* remain *open.*

(v) *The heat exchanger outlet valve opens and the heat exchanger bypass valve is signaled to close.*

(vi) *Vessel injection ~~takes place to flood the reactor~~* is terminated when the RHR Containment Spray Mode is selected. Alternately the Drywell or Wetwell spray modes can be initiated independently.

(vii) *In the presence of high drywell pressure ~~and/or high wetwell pressure, the injection valve is manually closed after the initial injection~~*, the Drywell spray valves will automatically open*.*

(viii) *~~Drywell spray and~~* The *wetwell spray ~~valves are manually opened~~* valve will open *to perform the spray function* without any permissives*.*

The spray system will continue to operate until manually terminated by the operator or ~~when a RHR initiation signal closes the wetwell spray valve or an injection valve not fully closed signal closes the drywell spray valves. The spray system~~ will automatically terminate and realign to the LPFL *injection mode* on receipt of a reactor vessel water below Level 1*, since core cooling has priority.*

(c) *Bypass and Interlocks*

No bypasses are provided for the wetwell and drywell spray system.

~~No interlock is provided for~~ The *wetwell spray function* is interlocked with reactor vessel water Level 1 as described in 7.3.1.1.3(a)*.*

(g) *Testability*

The Wetwell and Drywell Spray System is capable of being tested up to the last discharge valve during normal operation. Drywell and wetwell pressure channels are tested by cross-comparison between related channels. Any disagreement between the display readings for the channels would indicate a failure. The instrument ~~channel trip~~ setpoint is verified by viewing the displays for each instrument *~~automatic self-test functions in the SSLC which simulate programmed trip setpoints and monitor the response~~. Testing for functional operability of the control logics is accomplished* as described in*~~by the automatic self-test system (~~Subsection 7.1.2.1.6~~)~~. Other control equipment is functionally*

tested during manual testing of each loop. Indications in the form of panel lamps and annunciators are provided in the control room.

(i) Operational Considerations

~~*See Chapter 16 for setpoints and margin.*~~Chapter 16 describes the methods for calculating setpoints and margins.

(j) Parts of System Not Required for Safety

*The non-safety-related portions of the WDCS-RHR include the annunciators and the ~~computer~~*PCF*. Other instrumentation considered non-safety-related are those indicators which are provided for operator information, but are not essential to correct operator action.*

7.3.1.1.4 RHR/Suppression Pool Cooling Mode—Instrumentation and Control

STD DEP T1 3.4-1

STD DEP 7.3-5

STD DEP 7.3-14

(3) Equipment Design

(b) Logic and Sequencing

The operating sequence of suppression pool cooling, following indication that SP temperature is HIGH, is as follows:

(i) The RHR System pumps are started or continue to operate.

(ii) Valves in other RHR modes are ~~manually~~ automatically repositioned to align to SPC mode.

(iii) RHR service water discharge valves to the RHR heat exchanger are opened.

(iv) If performed following LPFL initiation, the Suppression Pool Cooling Modes switch is first “Armed” and the “Initiate” Pushbutton is pushed. At that time the *injection valves are manually closed and SP valves are opened.*

(v) The SPC mode will continue to operate until the operator ~~closes the SPC discharge valves~~ activates another permitted mode *or when reactor ~~low~~ water ~~level~~* below Level 1 *reoccurs, in which case the injection valve will auto-open and the SP discharge valve will auto-close.*

(vi) Automatic initiation of the SPC mode can only happen when initiated from the RHR Standby Mode. The operator must terminate this mode manually.

(g) Testability

Testing for functional operability of the control logic can be accomplished as described in Subsection 7.1.2.1.6.~~*by the automatic system self-test.*~~

(j) Parts of System Not Required for Safety

The non-safety-related portions of the SPC-RHR include the annunciators and the ~~*computer*~~PCF*. Other instrumentation considered non-safety-related are those indicators which are provided for operator information, but are not essential to correct operator action.*

7.3.1.1.5 Standby Gas Treatment System—Instrumentation and Controls

STD DEP T1 3.4-1

(3) Equipment Design

(j) Parts of System Not Required for Safety

The non-safety-related portions of the SGTS include the annunciators and the ~~*computer*~~PCF*. Other instrumentation considered non-safety-related are those indicators which are provided for operator information, but are not essential to correct operator action.*

7.3.1.1.7 Reactor Building Cooling Water System and Reactor Service Water System — Instrumentation and Controls

STD DEP T1 3.4-1

STD DEP 7.1-1

STD DEP 7.3-15

STD DEP Admin

(3) Equipment Design

During normal operation, RCW water flows through the safety-related and non-safety-related equipment except the RHR and emergency diesel jacket water cooling heat *exchangers.*

(i) Safety Interfaces

The safety interfaces for the RCW System Division I, II, and III controls are as follows:

— *Division I, ~~and~~ II, and III RCW flow signals to the MCR and Divisions I and II RCW flow signal to the RSS.*

— *~~RCW Hx~~ RSW A or D strainer differential pressure MCR annunciator.*

(j) Operational Considerations

Process operating parameters and equipment status information are provided in the control room for the operator to accurately assess system performance. Alarms are also provided to indicate malfunction in the system. Refer to IBD Figure 7.3-7 for specific indication of equipment status in the control room. ~~See Chapter 16 for setpoints and margin.~~Chapter 16 describes the methods for calculating setpoints and margins.

(k) Parts of System Not Required for Safety

The non-safety-related portions of the RCW System include the annunciators and the ~~computer~~PCF. Other instrumentation considered non-safety-related are those indicators that are provided for operator information, but are not essential to correct operator action.

7.3.1.1.9 HVAC Emergency Cooling Water System—Instrumentation and Control

STD DEP Admin

(3) Equipment Design

Lack of flow of Reactor Building cooling water to the refrigerant condenser automatically stops the refrigerator. Supply flow is controlled by the condensing pressure of the refrigerant. A flow switch provided at the chilled water line shuts down the refrigerator and chilled water pump upon indication of low flow in the chilled water line.

7.3.1.1.10 High Pressure Nitrogen Gas Supply System—Instrumentation and Controls

STD DEP Admin

(3) Equipment Design

(d) Redundancy and Diversity

The HPIN storage bottles are in two racks separated from each other. Additionally, in each rack there are two banks of ~~two~~ five bottles each. One bank is in service and the second is in standby.

7.3.1.1.11 ~~*Flammability Control System—Instrumentation and Controls*~~Not Used

STD DEP T1 2.14-1

~~*(See Subsection 6.2.5)*~~

7.3.1.2 Design Basis Information

STD DEP 1.8-1

STD DEP 7.1-1

STD DEP Admin

IEEE- ~~279~~ 603 *defines the requirements for* ~~*design bases*~~ safety systems designations and the safety systems criteria (Sections 4 and 5). ~~*Using the IEE 279 format, the*~~ The *following nine paragraphs fulfill this requirement for systems and equipment described in this seciton.*

(3) Number of Sensors and Location

There are no sensors in the LDS or ECCS, which have a spatial dependence, and, therefore, location information is not relevant. The only sensors used to detect essential variables of significant spatial dependence are the neutron flux detectors [Subsection 7.2.2.1(6)], the Suppression Pool Temperature Monitors [Subsection 7.6.1.7], *and the radiation detectors of the Process Radiation Monitoring System. These are in Section 7.6. All other systems discussed in Section 7.3 have sensors which have no spatial dependence.*

(5) Margin Between Operational Limits

The methods for calculating the *margin between operational limits and the limiting conditions of operation for the ESF System instruments are* ~~*listed in*~~ described in *Chapter 16. The margin includes the consideration of sensor and instrument channel accuracy, response times, and setpoint drift.*

7.3.2 Analysis

7.3.2.1 Emergency Core Cooling Systems—Instrumentation and Controls

7.3.2.1.1 General Functional Requirements Conformance

STD DEP 7.3-4

STD DEP 7.3-5

Initiation of the Automatic Depressurization Subsystem (ADS) occurs when reactor vessel ~~*low*~~ *water* below Level 1~~*level*~~ *and drywell high pressure are sensed, or when the* ~~*8 minute*~~ *drywell high pressure bypass timer* initiated by RPV Level 1 water level *runs out. Therefore it is not required that the nuclear system breach be inside the containment. This control arrangement is satisfactory in view of the automatic isolation*

of the reactor vessel for breaches outside the drywell and because the ADS is required only if the HPCF and/or RCIC System fail to maintain adequate reactor water level.

The control arrangement used for the ADS is designed to avoid spurious actuation (Figure 7.3-2). The ADS relief valves are controlled by two trip systems per division, both of which must be in the tripped state to initiate depressurization. Within each trip system, both drywell pressure high trip or time out of the ~~8 minute~~ drywell high pressure bypass timer and ~~low~~ Level 1 *reactor water level trip are required to initiate a trip system.*

7.3.2.1.2 Specific Regulatory Requirements Conformance

STD DEP T1 3.4-1

STP DEP 1.1-2

STD DEP 1.8-1

STD DEP 7.3-1

STD DEP 7.3-5

STD DEP 7.3-7

STD DEP 7.3-16

STD DEP 7.3-17

*(1) 10CFR50.55a (IEEE-~~279~~*603*)*

The ECCS incorporates two divisions of HPCF, one division of stream-driven RCIC, two divisions of ADS and three divisions (three loops) of LPFL (RHR/low pressure flooders). This automatically actuated network of Class 1E redundant high pressure and low pressure systems assures full compliance with IEEE-~~279~~ 603*.*

All components used for the ECCS are qualified for the environments in which they are located (Sections 3.10 and 3.11). All systems which make up the ECCS network are actuated by two-out-of-four logic combinations of sensors which monitor drywell pressure and reactor water level. There are a total of eight wide range *water level sensors and four drywell pressure sensors which are supplied by the Nuclear Boiler System. These instruments are shared by the ECCS as well as the RPS and other systems which require actuation signals from these essential variables. However, each system receives all four signals as input to its own unique voting logic incorporated in the ~~safety system logic and control (SSLC)~~* ESF Logic and Control System (ELCS) *network. If individual channels are bypassed for service or testing, the voting logic reverts to two-out-of-three.*

Each of these electrical divisions contains one of the drywell pressure sensors and two of the reactor water level sensors which contribute to the two-out-of- four voting logic. All of these signals are ~~multiplexed and passed~~ transmitted *through fiber-optic medium before entering the voting logic of the redundant divisions involved in the systems which make up the ECCS network.*

*Separation and isolation is thus preserved both mechanically and electrically in accordance with IEEE-*603*~~279~~ and Regulatory Guide 1.75.*

*Other requirements of IEEE-*603*~~279~~, such as testing, bypasses, manual initiation, logic seal-in, etc., are described in Subsection 7.3.1.1.1.*

(3) Regulatory Guides (RGs)

(a) RG 1.22—"Periodic Testing of Protection System Actuation Functions"

(i) Periodic testing is interpreted to mean testing of actuation devices ~~(which use pulse testing)~~ but not to include testing of the actuated equipment which is tested during surveillance testing.

(c) RG 1.53—"Application of the Single-Failure Criterion to Nuclear Power Protection Systems"

The ECCS generally meets the requirements of RG 1.53 in addition to Section ~~4.2~~ 5.1*of IEEE-~~279~~* 603 *and IEEE-379. However, specific exception is taken with regard to Paragraph C-2 as follows: Specific items which cannot be energized for test during plant operation, or tested by other than continuity tests without degrading plant operability or safety, will be exempt from the requirements of this paragraph.~~(e.g., the SRV solenoid pilot valves)~~*

(e) RG 1.75-"Physical Independence of Electric Systems"

The ECCS is in compliance with this regulatory guide assuming clarifications and alternates described in Subsection 7.1.2.10.5. Separation within the ECCS is such that controls, instrumentation, equipment, and wiring is segregated into four separate divisions designated I, II, III, and IV. Sensor input signals are in Division I, II, III, and IV. Control logic is performed in Divisions I, II and III. *Control and motive power separation is maintained in the same manner. Separation is provided to maintain the independence of the four divisions of the circuits and equipment so that the protection functions required during and following any design basis event can be accomplished.*

(4) Branch Technical Positions (BTP)

(c) BTP ICSB 21—"Guidance for Application of Regulatory Guide 1.47"

~~The ABWR design is a single unit.~~ ECCS is not shared between units. *Therefore, item B-2 of the BTP is not applicable. Otherwise, the ECCS is in full compliance with this BTP.*

(d) BTP IGSB 22—"Guidance for Application of Regulatory Guide 1.22"

In general, actuated equipment within the reactor protection system can be fully tested during reactor operation. Exceptions for the RPS scram function are discussed in Subsection 7.2.2.2.3.1 (10). Exceptions for ECCS include *~~the ADS valve pilot solenoids and the~~ LPFL shutdown valves which cannot be opened while the reactor is pressurized. However, ~~both~~* these *can be tested during reactor shutdown. ~~In addition, the ADS valve solenoids are monitored for continuity during the logic self-test.~~*

7.3.2.2 Leak Detection and Isolation System—Instrumentation and Controls

7.3.2.2.2 Specific Regulatory Requirements Conformance

STD DEP T1 3.4-1

STP DEP 1.1-2

STD DEP 1.8-1

(1) 10CFR50.55a (IEEE-~~279~~603)

The LDS ~~is~~ sensors and Digital Trip Functions (DTFs) are arranged as *a four-division system which is redundantly designed so that failure of any single element will not interfere with a required detection of leakage or isolation.*

All components used for the safety isolation functions are qualified for the environments in which they are located (Sections 3.10 and 3.11). Most initiation parameters are represented by all four divisions which actuate the isolation functions via two-out-of-four logic permissives. Most of the sensors are provided by the Nuclear Boiler System. These instruments are shared by the ECCS, as well as the RPS and other systems which require actuation signals from these essential variables. However, each system receives all four signals as input to its own unique voting logic incorporated in the ~~safety system logic and control (SSLC)~~ Reactor Trip and Isolation System (RTIS) and the ESF Logic and Control System (ELCS) *~~network~~. If individual channels are bypassed for service or testing, the voting logic reverts to two-out-of-three.*

All of these signals are ~~multiplexed and~~ passed through fiber optic medium before entering the voting logic of the redundant divisions involved in the isolation valve logic. Separation and isolation are thus preserved both mechanically and electrically in accordance with IEEE-~~279~~603 and Regulatory Guide 1.75. For further information see Subsection 9A.5.5.7.

Other requirements of IEEE-~~279~~603 such as testing, bypasses, manual initiation logic seal-in, etc., are described in Subsection 7.3.1.1.2.

(4) Branch Technical Positions (BTPs)

(a) BTP ICSB 21—"Guidance for Application of Regulatory Guide 1.47"

~~The ABWR design is a single unit.~~ LDS is not shared between units. *Therefore, Item B-2 of the BTP is not applicable. Otherwise, the LDS is in full compliance with this BTP.*

7.3.2.3 RHR/Wetwell and Drywell Spray Mode—Instrumentation and Controls

7.3.2.3.2 Specific Regulatory Requirements Conformance

STP DEP 1.1-2

STD DEP 1.8-1

STD DEP 7.3-13

(1) 10CFR50.55a (IEEE-~~279~~603)

All components used for the safety functions are qualified for the environments in which they are located (Sections 3.10 and 3.11). ~~This~~ The Drywell Spray *mode of the RHR System (unlike the LPFL mode which is automatically actuated by LOCA) ~~is automatically~~* can be manually *actuated should high pressure conditions occur in the drywell ~~and wetwell air space~~.* The Wetwell Spray mode can be initiated at any time provided the proper permissives are present.

The suppression cooling mode pool is designed in accordance with all requirements of IEEE-~~279~~603 as described in Subsection 7.3.1.1.3.

~~A clarification should be made with regard to IEEE-279, Section 4.19.~~ The parent RHR System annunciates activity at the loop level (i.e., "RHR LOOP A, B, C ACTIVATED"). However, the individual mode of the RHR System is not separately annunciated.

(4) Branch Technical Positions (BTPs)

In accordance with the Standard Review Plan for Section 7.3, and with Table 7.1-2, only BTPs 21 and 22 are considered applicable for the ~~WDSC~~ Wetwell / Drywell Spray *mode. They are addressed as follows:*

(a) BTP ICSB 21— "Guidance for Application of Regulatory Guide 1.47"

~~The ABWR design is a single unit.~~ RHR equipment is not shared between units. *Therefore, Item B-2 of the BTP is not applicable. Otherwise, the WDSC is in full compliance with this BTP.*

7.3.2.4 RHR/Suppression Pool Cooling Mode—Instrumentation and Controls

7.3.2.4.2 Specific Regulatory Requirements Conformance

STP DEP 1.1-2

STD DEP 1.8-1

(1) 10CFR50.55a (IEEE-~~279~~603)

The suppression cooling mode pool system is designed in accordance with all requirements of IEEE-~~279~~603 as described in Subsection 7.3.1.1.4.

~~A clarification should be made with regard to IEEE-279, Section 4.19.~~ The parent RHR System annunciates activity at the loop level (i.e., "RHR LOOP A, B, C ACTIVATED"). However, the individual mode of the RHR System is not separately annunciated.

(4) Branch Technical Positions (BTPs)

(a) BTP ICSB 21— "Guidance for Application of Regulatory Guide 1.47"

~~The ABWR design is a single unit.~~ RHR equipment is not shared between units. *Therefore, Item B-2 of the BTP is not applicable. Otherwise, the SPC mode is in full compliance with this BTP.*

7.3.2.5 Standby Gas Treatment System—Instrumentation and Controls

7.3.2.5.2 Specific Regulatory Requirements Conformance

STP DEP 1.1-2

STD DEP 1.8-1

(1) 10CFR50.55a (IEEE-~~279~~603)

The SGTS is designed to meet all the requirements of IEEE-~~279~~603. Detailed system design descriptions are given in Subsection 7.3.1.1.5.

(4) Branch Technical Positions (BTPs)

(a) BTP ICSB 21— "Guidance for Application for Regulatory Guide 1.47"

~~The ABWR design is a single unit.~~ SGT equipment is not shared between units. *Therefore, Item B-2 of the BTP is not applicable. Otherwise, the SGTS is in full compliance with this BTP.*

7.3.2.6 Emergency Diesel Generator Support System—Instrumentation and Control

7.3.2.6.2 Specific Regulatory Requirements Conformance

STP DEP 1.1-2

STD DEP 1.8-1

(1) 10CFR50.55a (IEEE-~~279~~603)

(4) Branch Technical Positions (BTPs)

(a) BTP ICSB 21— "Guidance for Application for Regulatory Guide 1.47"

~~The ABWR design is a single unit.~~ DG support equipment is not shared between units. *Therefore, Item B-2 of the BTP is not applicable. Otherwise, the diesel generator support systems are in full compliance with this BTP.*

7.3.2.7 Reactor Building Cooling Water System and Reactor Service Water System Instrumentation and Controls

7.3.2.7.2 Specific Regulatory Requirements Conformance

STP DEP 1.1-2

STD DEP 1.8-1

(1) 10CFR50.55a (IEEE-~~279~~603)

The RCW and the RSW Systems are designed to meet all applicable requirements of IEEE-~~279~~603. Detailed system design descriptions are given in Subsection 7.3.1.1.7 and in Section 9.2.

(4) Branch Technical Positions (BTPs)

(a) BTP ICSB 21— "Guidance for Application for Regulatory Guide 1.47"

~~The ABWR design is a single unit.~~ RCW equipment is not shared between units. *Therefore, Item B-2 of the BTP is not applicable. Otherwise, the RCW is in full compliance with this BTP.*

7.3.2.8 Essential HVAC Systems—Instrumentation and Control

7.3.2.8.2 Specific Regulatory Requirements Conformance

STP DEP 1.1-2

STD DEP 1.8-1

STD DEP Admin

(1) 10CFR50.55a (IEEE-~~279~~603)

The essential HVAC Systems (HVAC) ~~have two~~ are powered by three independent electrical divisions and are redundantly designed so that failure of any single electrical component will not interfere with the required safety action of the system.

The HVAC System utilizes mechanical Divisions ~~A & B~~ A, B, and C corresponding with electrical Divisions ~~I & II,~~ I, II, and III, respectively. Electrical separation is maintained between the redundant divisions.

The HVAC System is designed to meet all applicable requirements of IEEE-~~279~~603. Detailed system design descriptions are given in Subsection 7.3.1.1.8 and in Chapter 9.

(4) Branch Technical Positions (BTPs)

(a) BTP ICSB 21— "Guidance for Application for Regulatory Guide 1.47"

~~The ABWR design is a single unit.~~ HVAC equipment is not shared between units. Therefore, item B-2 of the BTP is not applicable. Otherwise, the HVAC System is in full compliance with this BTP.

7.3.2.9 HVAC Emergency Cooling Water System—Instrumentation and Control

7.3.2.9.2 Specific Regulatory Requirements Conformance

STP DEP 1.1-2

STD DEP 1.8-1

(1) 10CFR50.55a (IEEE-~~279~~603)

The HECW System is designed to meet all applicable requirements of IEEE-~~279~~603. Detailed system design descriptions are given in Subsection 7.3.1.1.9 and in Chapter 9.

(4) Branch Technical Positions (BTPs)

(a) BTP ICSB 21— "Guidance for Application for Regulatory Guide 1.47"

~~The ABWR design is a single unit.~~ HECW is not shared between units. Therefore, Item B-2 of the BTP is not applicable. Otherwise, the HECW System is in full compliance with this BTP.

7.3.2.10 High Pressure Nitrogen Gas Supply System—Instrumentation and Controls

7.3.2.10.2 Specific Regulatory Requirements Conformance

STP DEP 1.1-2

STD DEP 1.8-1

(1) 10CFR50.55a (IEEE-~~279~~603)

The HPIN System is designed to meet all applicable requirements of IEEE- ~~279~~603. Detailed system design descriptions are given in Subsection 7.3.1.1.10 and in Chapter 6.

(4) Branch Technical Positions (BTPs)

(a) BTP ICSB 21— "Guidance for Application for Regulatory Guide 1.47"

~~The ABWR design is a single unit.~~ HPIN is not shared between units. *Therefore, Item B-2 of the BTP is not applicable.*

7.3.3 COL License Information

7.3.3.1 Cooling Temperature Profiles for Class 1E Digital Equipment

The following standard supplement addresses COL License Information Item 7.1.

The room profiles for equipment qualification are included in Appendix 3I. These profiles wil be confirmed as part of the pre-operational testing. See Tier 1 Table 3.4 item 14(b).

7.3.4 References

STD DEP 16.3-100

7.3-2 [WCAP-17119-P "Methodology for South Texas Project Units 3 & 4 ABWR Technical Specification Setpoints".]*

* See Subsection 7.1.2.10.9.

The following figures are located in Chapter 21:

- Figure 7.3-1 High Pressure Core Flooder IBD (Sheets 2, 5-11, 13-15, 17)
- Figure 7.3-2 Nuclear Boiler System IBD (Sheets 1-11, 18, 30, 34, 36-37)
- Figure 7.3-3 Reactor Core Isolation Cooling System IBD (Sheets 1-7, 10, 12-17)
- Figure 7.3-4 Residual Heat Removal System IBD (Sheets 1, 3-4, 6, 10-14, 19-20, 20a)
- Figure 7.3-5 Leak Detection and Isolation System IBD (Sheet 1-8,11-12,15-16, 19-20, 23-24, 35, 36, 39-56, 58-61, 72, 74-77)

7.4 Systems Required for Safe Shutdown

The information in this section of the reference ABWR DCD, including all subsections, tables and figures, is incorporated by reference with the following departures and supplements.

STD DEP T1 2.4-1 (Figure 7.4-2, 7.4-3)

STD DEP T1 2.14-1 (Figures 7.4-2, 7.4-3)

STD DEP T1 3.4-1

STP DEP 1.1-2

STD DEP 1.8-1

STD DEP 7.4-1

STD DEP 7.4-2

STD DEP 8.3-1 (Figures 7.4-2, 7.4-3)

STD DEP Admin (Figure 7.4-2)

7.4.1 Description

STD DEP 1.8-1

See Subsection 7.1.2.4 which addresses the design basis information required by Section ~~3~~4 of IEEE-~~279~~603.

7.4.1.1 Alternate Rod Insertion Function–Instrumentation and Controls

STD DEP T1 3.4-1

STD DEP 7.4-1

The alternate rod insertion (ARI) function is accomplished independently and diversely from the Reactor Protection System (RPS). ~~Independent sensors (i.e., ECCS sensors) provide reactor trip signals, via the Recirculation Flow Control System (RFCS), both to ARI valves (part of the Control Rod Drive System) and to the Rod Control and Information System (RCIS).~~ The Recirculation Flow Control System (RFCS) receives isolated, low reactor level signals from the four ESF Logic and Control System (ELCS) divisions from reactor level sensors and safety controller equipment separate from that used for the RPS low reactor level SCRAM function. The RFCS also receives redundant high reactor dome pressure status signals from the non-safety Steam Bypass and Control System. The low reactor level signals and high reactor dome pressure signals are used for the RFCS logic for automatic initiation of the ARI function. In addition, the reactor operator, using two dedicated switches located on the Main Control Room Panel, can initiate the ARI function manually. When the ARI function is activated, either automatically or manually, ARI activation signals are

provided to the ARI valves of the Control Rod Drive System and simultaneously to the Rod Control and Information System. Energization of the *ARI valves (separate from the scram valves), ~~cause~~* causes *reactor shutdown by hydraulic ~~scram~~* insertion *of the control rods. The RCIS, acting upon ~~the same ARI signals that are provided to ARI valves,~~* ARI initiation signals from the RFCS, *causes reactor shutdown by electromechanical ~~(i.e., through the usage of FMCRD motors)~~ insertion of control rods* using the FMCRD motors*.*

7.4.1.3 Reactor Shutdown Cooling Mode–Instrumentation and Controls

STD DEP T1 2.4-1

STD DEP T1 3.4-1

STD DEP 8.3-1

STD DEP Admin

(3) Power Sources

This system utilizes normal plant power sources. These include 4.16 kV *~~6900 VAC~~ for the pumps, 480 VAC/120 VAC instrument buses, and as backed up by DC sources. If for any reason the normal plant sources become unavailable, the system is designed to utilize the emergency buses and sources.*

(4) Equipment

If it is necessary to discharge a complete core load of reactor fuel to the fuel pool, a means is provided for making a physical intertie between the Spent Fuel Pool Cooling and Cleanup (SFPC) System and the RHR heat exchangers. This increases the cooling capacity of the SFPC System to handle the heat load for this situation. ~~The fuel pool intertie is applied only to Loops B and C (see Figure 5.4-10 for RHR System P&ID).~~

(9) Actuated Devices

All valves in the SDC ~~System~~ mode *are equipped with remote manual switches in the main control room. The only automatically activated modes of the RHR are the LPFL mode for the ECCS and the suppression pool cooling mode, as described in Subsections 7.3.1.1.1.4 and 7.3.1.1.4, respectively. Other modes of RHR are described in Subsection~~s~~ 7.3.1.1.3~~ and 7.3.1.1.4~~.*

(11) Testability

~~The logic is tested by automatic self test. The sixth test,~~ SSLC testing as *discussed in Subsection 7.1.2.1.6, is also applicable here for the reactor SDC mode function of RHR System.*

7.4.1.4 Remote Shutdown System

7.4.1.4.2 Postulated Conditions Assumed to Exist as the Main Control Room Becomes Inaccessible

STD DEP 8.3-1

(2) The plant is not experiencing any transient situations. Even though the loss of offsite AC power is considered unlikely, the remote shutdown panel or facilities are powered from the *Class 1E power system ~~buses E and F~~ so that backup AC power would be automatically supplied by the plant diesel generator. Manual controls of the diesel generator are also available locally.*

7.4.1.4.4 Remote Shutdown Capability Controls and Instrumentation–Equipment, Panels, and Displays

STD DEP T1 2.14-1

STD DEP T1 3.4-1

STD DEP 8.3-1

STD DEP Admin

(1) ***Main Control Room****–Remote Shutdown Capability Interconnection Design Considerations*

Some of the existing systems used for normal reactor shutdown operations are also utilized in the remote shutdown capability to shut down the reactor from outside the main control room. The functions needed for remote shutdown control are provided with manual transfer devices which override controls from the main control room and transfer the controls to the remote shutdown control. Control signals are interrupted by the transfer devices at the hardwired, analog loop. Process signals to the main control room are routed from the sensor, through the transfer devices on the remote shutdown panels, and then to the ~~multiplexing system remote multiplexing units (RMUs)~~ Remote Digital Logic Controllers (RDLCs) *for ~~transmission to~~* use in *the main control room. Similarly, control signals from the main control room are routed from the ~~RMUs~~*RDLCs*, through the remote shutdown transfer devices, and then to the interfacing system equipment. Actuation of the transfer devices interrupts the connection to the ~~RMUs~~* RDLCs *and transfers control to the Remote Shutdown System. Control of all necessary power supply circuits are also transferred to the remote shutdown system. Remote shutdown control is not possible without actuation of the transfer devices. Operation of the transfer devices causes an alarm in the main control room. The remote shutdown control panels are located outside the main control room. Access to this point is administratively and procedurally controlled.*

(4) Nuclear Boiler System

~~(c) The following function has transfer and control switches located at the Division 2 remote shutdown control panel: one air-operated relief valve. (The valve is 125 volt DC solenoid pilot operated.)~~

(7) Electrical Power Distribution System (EPDS)

(a) The following functions have transfer and control switches located on the Division I remote shutdown panel:

(i) ~~6.9 kV feeder breaker: Unit auxiliary transformer A to M/C E~~ Safety Bus A3 Breaker from UAT A

(ii) ~~6.9 kV feeder breaker: Reserve auxiliary transformer A to M/C E~~ Safety Bus A3 Breaker from RAT A

(iii) ~~6.9 kV feeder breaker: Emergency diesel generator A to M/C E~~ Safety Bus A3 Breaker from Emergency Diesel Generator A

(iv) ~~6.9 kV feeder breaker: Combustion turbine generator to M/C E~~ Safety Bus A3 Breaker from Bus CTG3

(v) ~~6.9 kV load breaker: M/C E to P/C E20~~ Safety Bus A3 Breaker to P/C E20

(vi) 480V feeder breaker: TR to P/C E20

(b) The following functions have transfer and control switches located on the Division II remote shutdown panel:

(i) ~~6.9 kV feeder breaker: Unit auxiliary transformer B to M/C F~~ Safety Bus B3 Breaker from UAT B

(ii) ~~6.9 kV feeder breaker: Reserve auxiliary transformer A to M/C F~~ Safety Bus B3 Breaker from RAT A

(iii) ~~6.9 kV feeder breaker: Emergency diesel generator B to M/C F~~ Safety Bus B3 Breaker from Emergency Diesel Generator B

(iv) ~~6.9 kV feeder breaker: Combustion turbine generator to M/C F~~ Safety Bus B3 *Breaker* from Bus CTG3

(v) ~~6.9 kV load breaker: M/C F to P/C F20~~ Safety Bus B3 Breaker to P/C F20

(vi) 480V feeder breaker: TR to P/C F20

(c) ~~A 6.9 kV M/C (E,F)~~ A 4160V *voltmeter is provided on RSS panels A,B, respectively.*

~~(8) Flammability Control System (FCS)~~ Not Used

~~(a) The following FCS equipment function has transfer and control switches located on both remote shutdown panels as indicated:~~

~~(i) Valve (cooling water inlet) B~~

7.4.2 Analysis

7.4.2.1 Alternate Rod Insertion Function

7.4.2.1.1 General Functional Requirements Conformance

STD DEP 7.4-1

STD DEP Admin

The Recirculation Flow Control System (RFCS) includes the logic for both automatic initiation and manual initiation of the ARI function. When the RFCS initiates the ARI function, related ARI activation signals are provided to the ARI valves of the CRD system and to the Rod Control and Information System for activation of the ARI motor run-in function.

Upon initiation of the ARI function, the RFCS logic assures that the activation signals for the ARI valves will remain continuously energized sufficiently long to assure that the time-delayed, rapid hydraulic insertion of the control rods will occur by depressurizing the scram valves of the CRD hydraulic control units. This provides for a diverse means of hydraulic insertion of the control rods from the normal Reactor Protection System (RPS) initiated scram hydraulic insertion function.

The alternate rod insertion (ARI) motor run-in *function is accomplished by the Rod Control and Information System (RCIS) and the Fine-Motion Control Rod Drive (FMCRD) Subsystem. This function provides an alternate method of driving control rods into the core which is diverse from the hydraulic ~~scram system~~*insertion functions*.*

~~The RCIS and the active run-in function of the FMCRD motors~~ The RFCS, the ARI valves and the FMCRD components associated with the motor run-in function of the CRD System, and the RCIS *are not required for safety; nor are these components qualified in accordance with safety-related criteria. However, the FMCRD components associated with hydraulic scram are qualified in accordance with safety criteria.*

The ARI design is in full compliance with the design considerations cited in NEDE-~~31906~~ 31096*-P-A (Reference 7.4-1).*

7.4.2.1.2 Specific Regulatory Requirements Conformance

STD DEP 1.8-1

STD DEP 7.4-1

STD DEP 8.3-1

(1) 10CFR50.55a (IEEE-~~279~~603)

With regard to IEEE-~~279~~603, Section ~~4.7~~5.6.3, signals ~~which interface between ARI and RPS are optically isolated such that postulated failures within the ARI controls cannot affect the safety-related scram function.~~ from safety system equipment that interface with the non-safety system equipment that implements the ARI function (e.g., the low reactor water level status signals provided to the RFCS) are optically isolated so that failure of the non-safety equipment that implements the ARI function cannot affect any safety-related function.

The RCIS logic has been designed such that ~~a~~ the only *single failure~~,~~* that *~~only in the inverter controller part of a given rod logic,~~ may result in insertion failure of that rod when the ARI function is activated* is the failure of the logic and individual local control equipment (e.g., stepping motor driver module or rod brake controller) associated with FMCRD motor movement of one control rod*. Also, two manual actions are required at the ~~dedicated operator interface panel~~* Main Control Room Panel *to manually initiate ARI.*

(3) Regulatory Guides (RGs)

(a) RG 1.75–"Physical Independence of Electric Systems"

In addition, each FMCRD inverter has current limiting features to limit the FMCRD motor fault current. ~~Continuous operation of all the FMCRD motors at the limiting fault current of the inverter shall not degrade operation of any Class 1E loads (i.e., the diesel generators shall be of appropriate design capacity).~~ Refer to Subsection 8.3.1.1.1 for additional description of design features incorporated for preventing degradation of operation of any Class 1E loads if a fault condition exists in the non-Class 1E equipment that provides power for the FMCRD motors.

There are three separate groups of non-1E drives with each receiving power from Division I Class 1E bus. Class 1E circuit breakers are used as isolation devices in accordance with IEEE-384. The breakers are designed to trip on fault current only and are not tripped for LOCA. ~~However, the breaker coordination is assured through the use of zone selective interlocks (ZSI) (Subsection 8.3.1.1.1).~~

The ~~ZSI feature~~ circuit protection coordination and testing of breakers *assures that the FMCRDs ~~power~~ breaker time-overcurrent trip characteristic for all circuit faults shall cause the breaker to interrupt the fault current prior to trip initiation of any upstream breaker. The power source shall supply the necessary fault current for sufficient time to ensure the proper coordination without loss of function of Class 1E loads. ~~The ZSI is a new technology which assures breaker coordination, and thus meets the intent of position C-1 of Reg. Guide 1.75.~~*

7.4.2.2 Standby Liquid Control System (SLCS) — Instrumentation and Controls

7.4.2.2.2 Specific Regulatory Requirements Conformance

STP DEP 1.1-2

STD DEP 1.8-1

STD DEP Admin

(1) 10CFR50.55a (IEEE-~~279~~603)

The SLCS design is similar to the GESSAR II design, except the explosive (squib) injection valves are replaced with motor-operated injection valves. It is designed to meet all applicable portions of IEEE-~~279~~603 as clarified above.

(3) Regulatory Guides (RGs)

As indicated in Paragraph (1), the SLCS is not required to meet the single-failure criterion (RG 1.53) since it is designed to be redundant (and diverse) from the control rod scram system. However, the two channels of active components assure that no single failure of these components will prevent the SLCS from accomplishing its ~~safety~~ boron injection function. Passive components which are not redundant include the boron tank, injection pipeline, etc.

(4) Branch Technical Positions (BTPs)

In accordance with the Standard Review Plan for Section 7.3 and with Table 7.1-2, only BTPs 21 and 22 are considered applicable for the SLCS. They are addressed as follows:

(a) BTP ICSB 21– "Guidance for Application of Regulatory Guide 1.47" The SLCS is not shared between units. ~~ABWR design is a single unit.~~ Therefore, Item B-2 of the BTP is not applicable. Otherwise, the SLCS is in full compliance with this BTP.

7.4.2.3 Reactor Shutdown Cooling Mode — Instrumentation and Controls

7.4.2.3.1 General Functional Requirements Conformance

STD DEP T1 3.4-1

STD DEP 1.8-1

STD DEP 7.4-2

The design of the reactor shutdown cooling mode of the RHR System meets the general functional requirements as follows:

(3) Alarms

The following system functional alarms apply to all modes of the RHR System and to each of the three RHR loops except as noted:

(f) ~~*RHR logic power failure*~~ELCS Out of Service*.*

(l) LPFL *Manual initiation armed.*

7.4.2.3.2 Specific Regulatory Requirements Conformance

STD DEP 1.8-1

(1) 10CFR50.55a (IEEE-~~279~~603):

~~A clarification should be made with regard to IEEE-279, Section 4.19.~~ *The parent RHR System annunciates activity at the loop level (i.e., "RHR LOOP A,B,C ACTIVATED"). However, the individual mode of the RHR System is not separately annunciated.*

Those portions of IEEE-~~279~~603 which relate to automatically initiated systems are not applicable to the manually actuated shutdown cooling mode of the RHR System. However, the system is designed in accordance with all other requirements of IEEE-~~279~~603 as described in Subsection 7.4.1.3.

7.4.2.4 Remote Shutdown System–Instrumentation and Controls

7.4.2.4.2 Specific Regulatory Requirements Conformance

STD DEP T1 2.14-1

STD DEP 1.8-1

(1) 10CFR50.55a (IEEE-~~279~~603)

The Remote Shutdown System (RSS) consists of two panels (Division I and Division II) which are located in separate rooms in the Reactor Building.

The RSS provides remote control capability as defined by the following interfaces:

System	Total Channels	RSS Interface
~~*Flammability Control System*~~	~~*B, C*~~	~~*B*~~

Separation and isolation is preserved both mechanically and electrically in accordance with IEEE-~~279~~603 and Regulatory Guide 1.75.

With regard to Paragraph ~~4.2~~5.1 of IEEE-~~279~~603 a single-failure event is assumed to have occured to cause the evacuation of the control room. The RSS is not designed to accommodate additional failures for all scenarios. The effects of such failures are analyzed as follows:

Other sections of IEEE-~~279~~603 which relate to testability of sensors, etc., are not applicable to the RSS of itself, but are applicable to the primary systems which interface with the RSS. All other applicable criteria of IEEE-~~279~~603 are met by the RSS.

7.4.3 References

STD DEP Admin

7.4-1 ~~*NEDE-31906-P-A, A. Chung, "Laguna Verde Unit 1 Reactor Internals Vibration Measurement", February 1991.*~~ NEDE-31096-P-A, L. B. Claassen, et. al., Anticipated Transients Without Scram Response to NRC ATWS Rule, 10 CFR 50.62, February 1987.

The following figures are located in Chapter 21:

Figure 7.4-2 Remote Shutdown System IED

Figure 7.4-3 Remote Shutdown System IBD (Sheets 1-3)

7.5 Information Systems Important to Safety

The information in this section of the reference ABWR DCD, including all subsections and tables, is incorporated by reference with the following departures and supplements.

STD DEP T1 2.3-1 (Table 7.5-2)

STD DEP T1 2.14-1 (Table 7.5-2, 7.5-6)

STD DEP 1.8-1 (Table 7.5-1)

STD DEP 7.5-1 (Tables 7.5-2, 7.5-3, 7.5-4)

STD DEP 11.5-1 (Table 7.5-2)

STD DEP Admin (Tables 7.5-2, 7.5-4)

STD DEP Vendor

7.5.1.1 Post Accident Monitoring System

STD DEP Admin

(1) Variable Types

Regulatory Guide 1.97 defines five "types" and three "categories" of plant variables for accident monitoring instrumentation. A discussion of these classifications is provided below. Each variable has been defined as to both type and ~~classification~~ category. Plant variables are divided into types according to the purpose of the indication to the plant operator. Any one variable may belong to more than one type.

(a) Type A

Type A variables are limited to those variables which are necessary (primary) to alert the control room operator of the need to perform preplanned manual actions for safety systems to perform their safety functions, such as, initiating ~~suppression pool cooling and~~ containment spray to permit the systems to perform safety functions for which no automatic system controls are provided. Variables that require actions specified by the Emergency Procedure Guidelines (EPGs) in response to specific operating limits have also been considered in performing the assessment documented in this chapter.

7.5.2 Systems Analysis

7.5.2.1 Post Accident Monitoring System

STD DEP T1 2.3-1

STD DEP T1 2.14-1

STD DEP 7.5-1

STD DEP Admin

STD DEP Vendor

(1) Type A Variables

(a) Type A Variable Evaluation and Analysis

Chapter 15 contains discussions of numerous events, not all of which are design basis accidents. Appendix 15A is a plant Nuclear Safety Operational Analysis (NSOA) which addresses these events in the following categories:

(i)	*Normal operations*	
(ii)	*Anticipated Operational Transients*	*(Table ~~5.7-4~~ 7.5-4)*
(iii)	*Abnormal Operational Transients*	*Table ~~5.7-5~~ 7.5-5)*
(iv)	*Design Basis Accidents*	*(Table ~~5.7-6~~ 7.5-6)*
(v)	*Special Events*	*(Table ~~5.7-7~~ 7.5-7)*

The offsite release rate (R_E) was also not included with the Type A Variable List because the emergency action (emergency depressurization) specified in the radioactivity release control guidelines would, in all events, have been previously initiated in response to other variables (e.g., RPV Water Level). This conclusion is reached because the source terms required to reach release rates associated with a general emergency (the point at which the emergency action is required by the EPG) can only occur following a release of a substantial proportion of the fuel noble gas inventory. Prevention of such a release is a primary goal of the RPV control guideline. Also, the other operator action (isolate lines discharging outside the primary and secondary containment) are intended to be taken at levels low enough as to not pose a significant risk for the general public. The primary lines which communicate with the RPV are automatically isolated ~~on high steamline radiation~~ which satisfies the intent of the EPG action for these lines. Other lines which pass outside of the primary and secondary containment but which do not communicate directly with the RPV also receive automatic isolation signals. Thus, response to the radioactivity release control guideline is considered to be a contingency action and is not required to be Type A.

(2) General Variable Assessments

(a) Drywell Pressure

Requirements for monitoring of drywell pressure are specified for both narrow range (from about -34.32 kPaG to + 34.32 kPaG) and wide range (from 0 to 110% of design pressure). The narrow range monitoring requirement is satisfied in the existing safety-related design by the four divisions of drywell pressure instruments which provide inputs to the initiation of the reactor protection (trip) system (RPS) and the emergency core cooling systems (ECCS). The requirement for unambiguous wide range drywell pressure monitoring are satisfied with two channels of drywell pressure instrumentation integrated with two channels of wetwell pressure instrumentation. Given the existence of (1) the normal pressure suppression vent path between the drywell and wetwell and (2) the wetwell to drywell vacuum breakers, the long-term pressure within the drywell and wetwell will be approximately the same. Therefore, if the two wide range drywell pressure indications disagreed, the operator could refer to the wetwell containment pressure indications to determine which of the two drywell pressure indications is correct. In order to provide full range pressure comparisons between the drywell wide range and wetwell pressure instruments, the drywell pressure instrument range is 689.4 kPa. This value exceeds the required value of 110% of design pressure. Drywell pressure is a Type A variable because it is used to initiate drywell spray to maintain the Reinforced Concrete Containment Vessel (RCCV) below temperature limits in LOCA.

(d) BWR Core Temperature

*Regulatory Guide 1.97 requires BWR core temperature (thermocouples) as a diverse indication of adequate core cooling. ~~General Electric and the~~*The *BWR Owners' Group ~~have~~*has *taken exception to this requirement for diverse indication based upon studies regarding the relationship between reactor water level and adequate core cooling. ~~It is General Electric's view that no~~*No *instrumentation other than RPV water level indication is required to assure indication of adequate core cooling.*

(e) Drywell Sump Level

*An exception is made to Regulatory Guide 1.97 as written for the design category for the equipment drain sump level. Rather than Category 1, ~~General Electric considers~~ the Category 3 design requirements ~~to be~~*are *more appropriate for the following reason: Indication of drywell floor drain sump level provides monitoring of leakage to the drywell and will be an early indication of a very small reactor coolant system leak/break for those events for which the drywell cooling system remains operable. However, it is primarily a backup variable to other indications of reactor coolant system leaks/breaks such as drywell pressure or drywell radiation level. In addition, containment water level is provided as a Type D, Category 2 variable. A lower design*

classification for drywell sump level is therefore appropriate and triplicated instrument channels are not necessary.

(h) Coolant Radiation

~~*The indicator of coolant radiation leakage will be provided by theProcess Radiation Monitoring System (PRMS) Main Steamline (MSL) radiation monitor subsystem. This subsystem consists of four physically and electrically separated and redundant divisions. Each division has a single channel consisting of a local radiation detection assembly, control room readout and trip actuators (Figure 7.6-5, sh 1). Each channel is located such that it can monitor each mainsteam line. These four divisions of PRMS radiation instrumentation satisfy the Regulatory Guide requirement for unambiguous indication.*~~

A continuous post-accident monitor for this parameter is not necessary and is not included in the design. This is consistent with BTP HICB-10, Table 1.

(i) Suppression Pool Water Temperature

The ABWR Suppression Pool Temperature Monitoring (SPTM) System design requirements satisfy the Regulatory Guide 1.97 requirements regarding redundancy. The SPTM System is composed of four separate and independent instrument divisions. Each division has associated with it multiple thermocouples which are spatially distributed around the suppression pool. With this configuration, the bulk average suppression pool temperature can be determined even in the event of the loss of an entire division of instrumentation, since thermocouple sensors of each division will be located in close proximity to facilitate direct comparison. Although the ABWR design initiates reactor scram and suppression pool cooling automatically on high pool temperature, suppression pool water temperature variable is considered a Type A variable since ~~*no credit is taken for automatic initiation in the safety analysis*~~ the operator uses it for manual RPV depressurization*.*

(k) Drywell/Wetwell Hydrogen/Oxygen Concentration

The Containment Atmospheric Monitoring System (CAMS) consists of two independent and redundant nonsafety-related *drywell/*~~*containment*~~wetwell *oxygen and hydrogen concentration monitoring channels. Emergency response actions regarding these variables are consistently directed toward minimizing the magnitude of these parameters (i.e., there are no safety actions which must be taken to increase the hydrogen/oxygen levels if they are low).* Minimizing drywell/wetwell oxygen and hydrogen concentrations is accomplished by manual operator actions using containment venting and purging or using containment spray. *Consequently, the two channel CAMS design provides adequate PAM indication, since, in the event that the two*

channels of information disagree, the operator can determine a correct and safe action based upon the higher of the two (in-range) indications.

(g) Drywell Spray Flow and Wetwell Spray Flow

The ABWR design does not provide direct Drywell Spray Flow indication. Regulatory Guide 1.97 suggests this as a Type D Variable for the purpose of monitoring drywell spray operation. As allowed by BTP HICB-10, RHR flow, drywell temperature and drywell pressure indications are provided as acceptable alternatives. RHR provides water to the drywell spray headers. Following a postulated accident, presence of drywell spray flow results in drywell pressure and temperature reduction. The operator confirms drywell spray operation by observing that there is RHR flow present and that the drywell pressure and temperature is within expected limits. Operator use of these variables allows accurate and reliable measurement of the effectiveness of the drywell spray in a timely manner. In addition, the position of the spray throttling valves can be monitored and the sprays adequately controlled from the control room using these alternative variables.

Table 7.5-1 Design and Qualifiction Criteria for Instrumentation

Category 1	Category 2	Category 3
4. Channel Availability The instrumentation channel is available prior to an accident except as ~~*provided in Paragraph 4.11, "Exception," as defined in IEEE-279, 1971, "Criteria for Protection*~~ **noted in the Exception to Paragraph 6.7, "Maintenance Bypass," in IEEE-603, "Standard Criteria for Safety** Systems for Nuclear Power Generating Stations," or as specified in the technical specifications.	The out-of-service interval is based on normal technical specification requirements on out-of-service for the system it serves where applicable or where specified by other requirements.	No specific provision

Table 7.5-2 ABWR PAM Variable List

Variable	Range Required	Type	Cate-gory	Discussion Section
Drywell Pressure	~~0.034 MPaG to 0.021 MPaG~~ **-0.034 MPaG to +0.034 MPaG** (narrow range) ~~0–100~~ **0–110**% design pressure (wide range)	**A,**B,C,D	1	Subsection 7.5.2.1(2)(a)
Containment Area Radiation	10^{-2} ~~Gy~~ **Sv**/h to 10^{5} ~~Gy~~ **Sv**/h	C,E	1	Subsection 7.5.2.1(2)(f)
~~Coolant Radiation~~	~~1/2 Tech Spec limit to 100 times Tech Spec limit~~	~~C~~	~~1~~	~~Subsection 7.5.2.1(2)(h)~~
Drywell/Wetwell Hydrogen Concentration	0–30 Volume%	C	~~1~~ **3**	Subsection 7.5.2.1(2)(k)
Drywell/Wetwell Oxygen Concentration	0–10 Volume%	C	~~1~~ **2**	Subsection 7.5.2.1(2)(k)
Service Area Radiation Exposure Rate	10^{-3} ~~Gy~~ **Sv**/h to 10^{2} ~~Gy~~ **Sv**/h	E	3	
Plant and Environs Radiation/Radioactivity (Portable Instruments)	10^{-5} ~~Gy~~ **Sv**/h to10^{2} ~~Gy~~ **Sv**/h photons 10^{-5} ~~Gy~~ **Sv**/h to 10^{2} ~~Gy~~ **Sv**/h, beta and low energy photons	E	3	Portable Instruments *
Meteorological Data (Wind Speed, Wind Direction, and Atmospheric Stability)	0–360° 0–**22** ~~9.8~~ m/s **-5°C to 10°C**	E	3	*
On Site Analysis Capability (Primary Coolant, Sump and Space Containment Air Grab Sampling)	Refer to Regulatory Guide 1.97	E	3	*
~~Secondary Containment Area Temperature~~		~~E~~	~~2~~	
Secondary Containment Area Radiation	10^{-3} ~~Gy~~ **Sv**/h to 10^{2} ~~Gy~~ **Sv**/h	E	2	
Suppression Chamber Spray (Wetwell) Flow	**0-110% Design Flow**	**D**	**2**	**Subsection 7.3.1.1.4**

* *Out of ABWR Standard Plant Scope*

Table 7.5-3 ABWR Type A Variables

Suppression Pool Water Temperature
~~*Wetwell*~~**Drywell** Pressure

Table 7.5-4 Anticipated Operational Transients

Event Description	NSOA Event Figure No.	Tier 2 Section No.	Manual Action Variables*
Manual or Inadvertent SCRAM	~~15A.6-7~~ **15A-12**	15A.6.3.3 Event 7	P_{RPV}, L_{RPV}
Loss of Plant Instrument Service Air Systems	~~15A.6-8~~ **15A-13**	15A.6.3.3 Event 8	T_{SP},P_{RPV}, L_{RPV}
Recirculation Flow Control Failure—One RIP Runout	~~15A.6-9~~ **15A-14**	15.4.5	P_{RPV}, L_{RPV}
Recirculation Flow Control Failure—One RIP Runback	~~15A.6-10~~ **15A-15**	15.3.2	P_{RPV}, L_{RPV}
Three RIPs Trip	~~15A.6-11~~ **15A-16**	15.3.1	P_{RPV}, L_{RPV}
All MSIV Closure	~~15A.6-12~~ **15A-17**	15.2.4	T_{SP},P_{RPV}, L_{RPV}
One MSIV Closure	~~15A.6-13~~ **15A-18**	15.2.4	T_{SP},P_{RPV}, L_{RPV}
Loss of All Feedwater Flow	~~15A.6-14~~ **15A-19**	15.2.7	P_{RPV}, L_{RPV}
Loss of a Feedwater Heater	~~15A.6-15~~ **15A-20**	15.1.1	ϕ,P_{RPV}, L_{RPV}
Feedwater Controller Failure—Runout of One Feedwater Pump	~~15A.6-16~~ **15A-21**	15.1.2	P_{RPV}, L_{RPV}
Pressure Regulator Failure—Opening of One Bypass Valve	~~15A.6-17~~ **15A-22**	15.1.3	P_{RPV}, L_{RPV}
Pressure Regulator Failure—Opening of One Control Valve	~~15A.6-18~~ **15A-23**	15.2.1	P_{RPV}, L_{RPV}
Main Turbine Trip with Bypass System Operational	~~15A.6-19~~ **15A-24**	15.2.3	T_{SP}, P_{RPV}, L_{RPV}
Loss of Main Condenser Vacuum	~~15A.6-20~~ **15A-25**	15.2.5	P_{RPV}, L_{RPV}
Generator Load Rejection with Bypass System Operational	~~15A.6-21~~ **15A-26**	15.2.2	T_{SP},P_{RPV},L_{RPV}
Loss of Unit Auxiliary Transformer	~~15A.6-22~~ **15A-27**	15.2.6	T_{SP},P_{RPV}, L_{RPV}

* See Table 7.5-9 for Definition of symbols

Table 7.5-5 Abnormal Operational Transients

Event Description	NSOA Event Figure No.	Tier 2 Section No.	Manual Action Variables*
Inadvertent Startup of HPCF Pump	~~15A.6-23~~ **15A-28**	15.5.1	ϕ
Main Turbine Trip with One Bypass Valve Failure	~~15A.6-26~~ **15A-31**	15.2.3	P_{RPV}, L_{RPV}
Generator Load Rejection with One Bypass Valve Failure	~~15A.6-27~~ **15A.32**	15.2.2	P_{RPV}, L_{RPV}
Abnormal Startup of the Idle Reactor Internal Pump	**15A-45**	**15.4.4**	$\mathbf{P_{RPV}}$, $\mathbf{L_{RPV}}$
Recirculation Flow Control Failure – All RIPs Runout	**15A-46**	**15.4.5**	ϕ, $\mathbf{L_{RPV}}$
Recirculation Flow Control Failure – All RIPs Runback	**15A-47**	**15.3.2**	$\mathbf{L_{RPV}}$
Feedwater Controller Failure Maximum Demand	**15A-51**	**15.1.2**	$\mathbf{P_{RPV}}$, $\mathbf{L_{RPV}}$
Pressure Regulator Failure – Opening of All Bypass and Control Valves	**15A-52**	**15.1.3**	$\mathbf{P_{RPV}}$, $\mathbf{L_{RPV}}$
Main Turbine Trip with Bypass Failure	**15A-55**	**15.2.3**	$\mathbf{T_{SP}}$, $\mathbf{P_{RPV}}$, $\mathbf{L_{RPV}}$
Generator Load Rejection with Bypass Failure	**15A-56**	**15.2.2**	$\mathbf{T_{SP}}$, $\mathbf{P_{RPV}}$, $\mathbf{L_{RPV}}$

* See Table 7.5-9 for Definition of symbols

Table 7.5-6 Design Basis Accidents

Event Description	NSOA Event Figure No.	Tier 2 Section No.	Manual Action Variables*
Loss-of-Coolant Accident Resulting from Spectrum of Postulated Piping Breaks within the RCPB Inside Containment	*15A.6-32*	*15.6.5*	~~H_{2C}, O_{2C},~~ L_{RPV}, L_{SP}, P_{RPV}, P_{DW}, Ø

7.6 All Other Instrumentation Systems Required for Safety

The information in this section of the reference ABWR DCD, including all subsections, tables, and figures, is incorporated by reference with the following departures and supplements.

STD DEP T1 2.3-1 (Figure 7.6-5)

STD DEP T1 2.14-1

STD DEP T1 3.4-1 (Table 7.6-5 and Figures 7.6-1, 7.6-2, 7.6-4a)

STP DEP 1.1-2

STD DEP 1.8-1

STD DEP 7.1-1

STD DEP 7.1-2 (Table 7.6-5)

STD DEP 7.6-1 (Table 7.6-2 and Figures 7.6-2, 7.6-14)

STD DEP 7.6-2

STD DEP 7.6-3 (Figures 7.6-9, 7.6-11)

STD DEP 7.6-4

STD DEP 11.5-1 (Figure 7.6-5)

STD DEP Admin (Table 7.6-1)

7.6.1.1 Neutron Monitoring System-Instrumentation and Controls

STD DEP T1 3.4-1

(1) System Identification

The purpose of the Neutron Monitoring System (NMS) is to monitor power generation and, for the safety function part of the NMS, to provide trip signals to the Reactor Protection System (RPS) to initiate reactor scram under excessive neutron flux (and power) increase condition (high level) or neutron flux fast rising (short period) condition. The NMS also provides power information of operation and control of the reactor to the Plant ~~Process~~ Computer ~~System (PCS)~~ Functions (PCF) and the rod block monitor. A block diagram showing a typical NMS division is shown in Figure 7.6-4a. The operating ranges of the various detectors are shown in Figure 7.6-4b.

7.6.1.1.1 Startup Range Neutron Monitor Subsystem-Instrumentation and Controls

STD DEP T1 3.4-1

(3) Physical Arrangement

The 10 detectors are all located at fixed elevation slightly above the midplane of the fuel region, and are evenly distributed throughout the core. The SRNM locations in the core, together with the neutron source locations, are shown in Figure 7.6-1. Each detector is contained within a pressure barrier dry tube inside the core, with signal output exiting the bottom of the dry tube undervessel. Detector cables then penetrate the primary containment and are connected to preamplifiers located in the Reactor Building. The SRNM preamplifier signals are then transmitted to the SRNM ~~DMC (digital measurement and control)~~ units in the control room. The ~~DMC~~SRNM units provide algorithms for signal processing, flux, and power calculations, period trip margin and period calculations, and provide various outputs for local and control console displays, ~~recorder,~~ and to the plant ~~process~~ computer ~~system~~ function. There are also the alarm and trip digital outputs for both high flux and short period conditions, and the instrument inoperative trip to be sent to the RPS and RCIS separately. The electronics for the SRNMs and their bypasses are located in four separate cabinets.

(4) Signal Processing

Over the 10-decade power monitoring range, two monitoring methods are used: (1) for the lower ranges the counting method which covers from 1.E+3 neutron/cm^2 to 1.E+9 neutron/cm^2, and (2) for the higher ranges, the Campbelling technique (mean square voltage, or MSV) which covers from 1.E+8 neutron/cm^2 to 1.E+13 neutron/cm^2 of neutron flux. In the counting range, the discrete pulses produced by the sensors are applied to a discriminator after preamplification. The discriminator, together with other digital noise-limiter features, separates the neutron pulses from gamma radiation and other noise pulses. The neutron pulses are then counted. The reactor power is proportional to the count rate. In the MSV range, where it is difficult to distinguish the pulses, a DC voltage proportional to the mean square value of the input signal is produced. The reactor power is proportional to this mean square voltage. In the mid-range overlapping region, where the two methods are changed over, the ~~DMC based~~ SRNM calculates the neutron flux based on a weighted interpolation of the two flux values calculated by both methods. A continuous and smooth flux reading transfer is achieved in this manner. There is also the calculation algorithm of the period-based trip circuitry that generates trip margin setpoint for the period trip protection function.

(6) Bypasses and Interlocks

The SRNM also sends an interlock signal to the safety system logic control (SSLC) system. This signal is called "ATWS Permissive" and is a binary signal indicating whether the SRNM power level is above or below a specific setpoint level (Table 7.6-1). If this signal is a "high" level indicating the power

is above the setpoint, this will allow the SSLC to permit ATWS protection action such as permission to inject liquid poison.

7.6.1.1.2 Power Range Neutron Monitor Subsystem—Instrumentation and Controls

7.6.1.1.2.1 Local Power Range Neutron Monitor Subsystem—Instrumentation and Controls

STD DEP T1 3.4-1

STD DEP Admin

(1) General Description

*The local power range monitor (LPRM) monitors local neutron flux in the power range. The LPRM provides input signals to the APRM Subsystem (Subsection 7.6.1.1.2.2) and to the plant computer ~~system~~*function *(Subsection 7.7.1.5). See Figures 7.6-1 and 7.6-2.*

(4) Signal Processing

The LPRM detector outputs are connected by coaxial cables from under the vessel pedestal region and routed through the primary containment penetration, and through the Reactor Building to be processed for signal conditioning analog-to-digital conversion function in the control room. The LPRM signals are connected to the APRM units in the control room, where the signals are amplified. Such amplified voltage is proportional to the local neutron flux level. The LPRM signals are then used by the APRM to produce APRM signals. The 208 LPRM detectors are separated and divided into four groups to provide four independent APRM signals. Individual LPRM signals are also transmitted through dedicated interface units (for isolation) to various systems such as the RCIS, and the plant ~~process~~ computer functions*.*

(5) Trip Functions

*The LPRM channels provide alarm signals indicating when an LPRM is upscale, down-scale, or bypassed. However, such signals are not sent to the RPS for scram trip or RCIS for ~~rad~~*rod *block.*

(7) Redundancy

*The LPRM detector assemblies are divided into groups. The redundancy criteria are met in the event of a single failure under permissible APRM bypass conditions. A scram signal ~~can be~~*is *generated in the Reactor Protection System (RPS) as required if the inoperative trip of the APRM is generated as described in (6).*

7.6.1.1.2.2 Average Power Range Monitor Subsystem—Instrumentation and Controls

STD DEP T1 3.4-1

STD DEP 7.6-1

(1) General Description

(a) Average Power Range Monitor (APRM)

The APRMs are safety-related systems. There are four divisions of ~~DMC-based~~ APRM channels located in the control room. Each channel receives 52 LPRM signals as inputs, and averages such inputs to provide a core average neutron flux that corresponds to the core average power. One APRM channel is associated with each trip system of the Reactor Protection System (RPS). However, a trip signal from each APRM division also goes to all other RPS divisions, with proper signal isolation.

(b) Oscillation Power Range Monitor (OPRM)

The OPRM is a functional subsystem of the APRM. There are four safetyrelated OPRM channels, with each OPRM channel as part of each of the four APRM channels. Each OPRM receives the identical LPRM signals from the corresponding APRM channel as inputs, and forms a special OPRM cell configuration to monitor the neutron flux behavior of all regions of the core. Each OPRM cell represents a combination of four LPRM signals selected from the LPRM strings at the four corners of a four-by-four fuel bundle square region. The OPRM detects thermal hydraulic instability and provides trip functions to the RPS to suppress neutron flux oscillation prior to the violation of safety thermal limits. The OPRM trips are ~~combined with~~separate from the APRM trips of the same APRM channel~~, to be sent~~ to the RPS.

(4) Trip Function

For the OPRM trip function, the response signal of any one OPRM cell that satisfies the conditions and criteria of the trip algorithm will cause a trip of the associated OPRM channel. Figure 7.6-14 illustrates the trip algorithm logic. ~~The OPRM trip function does not have its own inoperative trip for insufficient number of total LPRM inputs in the channel. It follows the APRM's inoperative trip of insufficient number of LPRMs.~~ The OPRM function has its own inoperative trip when the channel has less than the required minimum operable cells, when there is an OPRM self-diagnostic fault, when the APRM instrument watchdog timer has timed out, or if there is a loss of power to the APRM instrument.

(5) Bypasses and Interlocks

(a) APRM

The APRM also sends an interlock signal to the ~~SSLC~~ ELCS *~~similar to the SRNM "ATWS Permissive" signal~~ (Table 7.6-2). If this signal is a "high" level indicating the power is above the setpoint, this will allow the ~~SSLC~~* ELCS *to permit ATWS protection action.*

(6) Redundancy

(b) OPRM

There are four independent and redundant OPRM channels. The above APRM redundancy condition also applies to OPRM since each OPRM channel is associated with one RPS division. *~~is a subsystem of each of the four APRM channels.~~ The OPRM trip outputs* are provided separately from the APRM trips to RPS and*~~also~~ follow the* RPS *two-out-of-four logic ~~as the APRM since the OPRM trip outputs are combined with other APRM trip outputs in each APRM channel to provide the final trip outputs to the RPS~~. In addition, each LPRM string with four LPRM detectors provides one LPRM input to each of the four independent and redundant OPRM channels. This provides core regional monitoring by redundant OPRM channels.*

(7) Testability

APRM channels are calibrated using data from previous full-power runs and are tested by procedures in the instruction manual. Each APRM channel can be tested individually for the operability of the APRM scram and rod-blocking functions by introducing test signals. This includes the test for the OPRM trip function. A self-testing feature ~~similar to that described for SSLC~~ is also provided.

7.6.1.1.3 Reactor Operator Information

STD DEP Admin

The man-machine interface of the Neutron Monitoring System provides for the information and controls described in this subsection. The lists provided in Table ~~7.6-3~~ 7.6-5 *consist of major signal information which is also documented in the system IED (Figure 7.6-1) and the system IBD (Figure 7.6-2).*

7.6.1.2 Process Radiation Monitoring System – Instrumentation and Controls

STD DEP T1 2.3-1

The process radiation subsystems are shown in the system design IED (Figure 7.6-5). Subsystems (~~1~~2) through (4) are classified nuclear safety-related, while subsystems

(1) and (5) *through (11) are classified as non-safety-related. System descriptions and requirements are described in detail in Section 11.5*.

7.6.1.3 High Pressure/Low Pressure Systems Interlock Protection Functions

STD DEP 7.1-1

(14) Setpoints

~~*See Chapter 16 for setpoints and margin.*~~Chapter 16 describes the methods for calculating setpoints and margins.

7.6.1.6 Containment Atmospheric Monitoring (CAM) System-Instrumentation and Controls

STD DEP T1 2.14-1

STD DEP 11.5-1

(1) System Identification

The CAM System (Figures 7.6-7 and 7.6-8) consists of two independent but redundant Class 1E divisions (I and II) of radiation channels*, which are electrically and physically separated*, and a non-safety H_2/O_2 monitoring subsystem*. Each CAM* ~~*division*~~ divisional radiation channel *has the capability of monitoring the total gamma-ray dose rate*. CAMS also has the capability of monitoring ~~*and*~~ *concentration of hydrogen and oxygen (H_2/O_2) in the drywell and/or the suppression chamber during plant operation, and following a LOCA event.*

There are two radiation monitoring channels per division; one for monitoring the radiation level in the drywell and the other for monitoring the radiation level in the suppression chamber. Each monitoring channel consists of ~~*an ion chamber*~~ a *detector*~~*,*~~ and *a digital log radiation monitor*~~*, and a recorder*~~*. Each radiation monitoring channel provides alarm indication in the control room on high radiation levels and also if the channel becomes inoperative.* The monitor also provides data for the historian function.

The H_2/O_2 monitoring subsystem has two channels and consists ~~*Each divisional H_2/O_2 monitoring channel consists*~~ *of valves, pumps, and pipes used to extract samples of the atmosphere in the drywell or the suppression chamber and feed the extracted air sample into an analyzer and monitor for measurement*~~*, recording*~~*, and for alarm indication on high concentration of gas levels.* The H_2/O_2 monitoring subsystem is non-safety and is physically and electrically separate from the safety-related components of the system.

The piping used for the gas extraction is made of stainless steel and utilizes heat tracing to keep the pipes dry and free of moisture condensation.

(2) *Power Sources*

Each CAM ~~Subsystem~~ radiation channel *is powered from divisional 120 VAC instrument bus. ~~The same Class 1E divisional 120 VAC power source also supplies the heat tracing blanket used for the sampling lines.~~* The H_2/O_2 subsystem is powered from non-safety equipment.

(3) *Initiating Circuits*

Each divisional gamma radiation monitoring channel can be energized manually by the operator. ~~or automatically by the LOCA signal. For the manual mode, the~~ The *gamma radiation monitor is on continuously during plant operation and remains on until power is turned off by the operator.*

~~In the power off mode, the channel will be activated automatically in the presence of a LOCA (high drywell pressure or low reactor water level).~~

Each ~~divisional~~ H_2/O_2 monitoring subsystem channel *(except for the two sampling pumps) is powered continuously during plant operation. ~~One pump~~* Each subsystem channel *is controlled by an operator and is used during reactor operation and ~~the other is~~* can also be *turned on by the LOCA signal to allow measurement during an accident.*

The heat tracing used in each H_2/O_2 sample line is temperature controlled to prevent moisture condensation in the pipes.

Each ~~divisional~~ H_2/O_2 analyzer and monitor can selectively measure the atmosphere in the drywell or the suppression chamber.

~~Division I and II~~ LOCA signals are provided to the CAM System from the RHR System. These signals are based on two-out-of-four logic signals for the high drywell pressure or low reactor water level.

(4) *Redundancy and Diversity*

The CAM Subsystems, Divisions I and II radiation channels*, are independent and are redundant to each other.*

(5) *Divisional Separation*

The two CAM ~~Subsystems~~ radiation monitoring channel divisions *are electrically and physically separated so that no single design basis event is capable of damaging equipment in more than one CAM division. No single failure or test, calibration, or maintenance operation can prevent function of more than one division.*

(7) Environmental Consideration

The CAM System radiation monitoring channels are~~*is*~~ *qualified Seismic Category I and* ~~*is*~~are *designed for operability during normal and post-accident environments.*

(8) Operational Considerations

The following information is available to the reactor operator:

(a) Each gamma radiation channel consists of ~~*an ion chamber*~~ a detector and *a log radiation monitor*~~*, and a recorder*~~*. Each channel has a range of 0.01* ~~*Gy/h*~~ Sv/h *to* 10^5 Sv/h ~~*Gy/h*~~*. Each channel will initiate an alarm on high radiation level or on an inoperative channel.*

(b) Each hydrogen/oxygen monitoring ~~*channel uses*~~subsystem channel contains *a sampling rack for extracting the atmosphere from the drywell or the suppression chamber and for analyzing the contents for both* H_2/O_2 *concentration. The gaseous measurements are made by volume on a wet basis after humidity correction (dry basis before humidity correction). Separate monitors are provided for oxygen and hydrogen indications.*

Each H_2/O_2 *analyzer* ~~*rack has a series of*~~subsystem channel has *alarms to indicate a high concentration of hydrogen and of oxygen, and to alert the operator of any abnormal system parameter. Refer to Figure 7.6-8 for definition of these alarms.*

7.6.1.7 Suppression Pool Temperature Monitoring System-Instrumentation and Controls

7.6.1.7.1 System Identification

STD DEP 7.6-2

The Suppression Pool Temperature Monitoring (SPTM) System is a subsystem of the Reactor Trip and Isolation System (RTIS). It is *provided to monitor suppression pool temperature. Monitoring of suppression pool temperature is provided so that trends in suppression pool temperature may be established in sufficient time for proper cooling of the suppression pool water and for reactor scram due to high suppression pool temperature and for reactor power control based upon symptom-based emergency operating procedures.*

7.6.1.7.3 Equipment Design

STD DEP T1 3.4-1

STD DEP 7.6-3

The SPTM System configuration is shown in Figures 7.6-9 and 7.6-10. There are eight temperature circumferential sensor locations (Figure 7.6-9), which are chosen based upon the following considerations:

(2) Each SRV discharge line quencher *is in direct sight of two sets of temperature sensors within 9 meters.*

Electrical wiring for each sensor is terminated, for sensor replacement or maintenance, in the wetwell. This termination is sealed for moisture protection from condensation or wetwell sprays. Division I, II, III and IV sensors are wired through Division I, II, III or IV electrical penetrations, respectively. Division ~~I, II, III or IV~~ I and II *sensor signals ~~are wired to~~* for *the Remote Shutdown System* are directly hardwired*. ~~all sensor signals multiplexed to the main control room via the respective Division I, II, III or IV essential multiplexers.~~*

7.6.1.7.9 Signal Processing

STD DEP T1 3.4-1

*Processing of temperature signals is performed by a ~~microprocessor~~*configurable logic device *for each instrument division. For each of the four instrument divisions, the temperature signals are arithmetically averaged to yield an average bulk suppression pool temperature. Provisions are incorporated to detect sensor failures. When failure of a sensor is detected, its output is not added to the sum of all other sensors in the division and the number of sensors is correspondingly reduced in computing the average temperature. In addition, the narrow range suppression pool water level signal from the Atmospheric Control System (ACS) is used to detect uncovery of the first set of sensors below the pool surface. After sensor installation, the elevation for each sensor is to be established with respect to a common reference elevation. When the suppression pool water level drops below the elevation of a particular sensor, that sensor signal is not used in computing the average. The wide range level signal from the ACS is utilized for this purpose for the remaining sensors.*

7.6.2 Analysis

7.6.2.1 Neutron Monitoring System—Instrumentation and Controls

7.6.2.1.1 General Functional Requirements Conformance

STD DEP 7.6-4

(2) Power Range Neutron Monitors (PRNM)

The PRNM Subsystem provides information for monitoring the average power level of the reactor core and for monitoring the local power level when the reactor power is in the power range (above approximately ~~15%~~ 5% *power). It mainly consists of the LPRM and the APRM Subsystems.*

7.6.2.1.2 Specific Regulatory Requirements Conformance

STP DEP 1.1-2

STD DEP 1.8-1

STD DEP Admin

(1) 10CFR50.55a (IEEE- ~~279~~603):

There are 52 LPRM assemblies evenly distributed in the core. There are four LPRM detectors on each assembly, evenly distributed from near the bottom of the fuel region to near the top of the fuel region (Figure 7.6-3). A total of 208 detectors are divided and assigned to four divisions for the four APRMs. Any single LPRM detector is only assigned to one APRM division. Electrical wiring and physical separation of the division is optimized to satisfy the safety-related system requirement. With the four divisions, redundancy criteria are met, since a scram signal can still be initiated with a postulated single failure under allowed APRM bypass conditions. The OPRM subsystem as described in Subsection 7.6.1.1.2.2 conforms to all applicable requirements of IEEE- ~~279~~603.

All applicable requirements of IEEE- ~~279~~603 are met with the NMS.

(4) Branch Technical Positions (BTPs)

In accordance with the Standard Review Plan for Section 7.6, and with Table 7.1-2, only BTPs 21 and 22 are considered applicable for the NMS. They are addressed as follows:

(a) BTP ICSB 21- "Guidance for Application of Regulatory Guide 1.47"

The ~~ABWR design is a single unit~~ two units do not share NMS equipment*. Therefore, Item B-2 of the BTP is not applicable. Otherwise, the NMS is in full compliance with this BTP.*

7.6.2.2 Process Radiation Monitoring System—Instrumentation and Controls

7.6.2.2.2 Specific Regulatory Requirements Conformance

STP DEP 1.1-2

STD DEP 1.8-1

(1) 10CFR50.55a (IEEE- ~~279~~603):

Electrical separation is maintained between the redundant divisions. All applicable requirements of IEEE- ~~279~~603 are met by the safety-related subsystem of the PRM System.

(4) Branch Technical Positions (BTPs)

In accordance with the Standard Review Plan for Section 7.6, and with Table 7.1-2, only BTPs 21 and 22 are considered applicable for the PRM safety-related subsystems. They are addressed as follows:

(a) BTP ICSB 21- "Guidance for Application of Regulatory Guide 1.47"

The ~~ABWR design is a single unit~~ two units do not share PRM equipment*. Therefore, Item B-2 of the BTP is not applicable. Otherwise, the PRM System is in full compliance with this BTP.*

7.6.2.3 High Pressure/Low Pressure Systems Interlock Function

7.6.2.3.2 Specific Regulatory Requirements Conformance

STD DEP 1.8-1

(1) 10CFR50.55a (IEEE-~~279~~603)

The HP/LP interlocks are an integral part of the RHR System, which is designed to meet the requirements of IEEE-~~279~~603 as discussed in Subsections 7.4.2.3.2 and 7.3.2.1.2.

7.6.2.6 Containment Atmospheric Monitoring System—Instrumentation and Controls

7.6.2.6.2 Specific Regulatory Requirements Conformance

STD DEP T1 2.14-1

STP DEP 1.1-2

STD DEP 1.8-1

(1) 10CFR50.55a (IEEE- ~~279~~603)

The safety related *CAMS* radiation channels *consist~~s~~ of two divisions which are redundantly designed so that failure of any single element will not interfere with the system operation. Electrical separation is maintained between the redundant divisions.*

The CAMS does not actuate or interface with the actuation of another safety-related system. Therefore, any portion of IEEE- ~~279~~603 which pertains to such interfaces is not applicable. All other applicable requirements of IEEE- ~~279~~603 are met with the CAMS.

(4) Branch Technical Positions (BTPs)

In accordance with the Standard Review Plan for Section 7.6, and with Table 7.1-2, only BTPs 21 and 22 are addressed for the CAMS as follows:

(a) BTP ICSB 21- "Guidance for Application of Regulatory Guide 1.47"

The ~~ABWR design is a single unit~~ two units do not share CAMS equipment. *Therefore, Item B-2 of the BTP is not applicable. Otherwise, the CAMS is in full compliance with this BTP.*

7.6.2.7 Suppression Pool Temperature Monitoring System—Instrumentation and Controls

7.6.2.7.2 Specific Regulatory Requirements Conformance

STP DEP 1.1-2

STD DEP 1.8-1

(1) 10CFR50.55a (IEEE- ~~279~~603)

The SPTM system continuously operates during the plant operation. It does, however, automatically initiate RHR for suppression pool cooling and generates four divisional trip signals for RPS. Therefore, the portions of IEEE- ~~279~~603 which pertain to actuation of safety functions apply through RHR and RPS. All other applicable requirements of IEEE- ~~279~~603 are met with the SPTM system.

(4) Branch Technical Positions (BTPs)

In accordance with the Standard Review Plan for Section 7.6, and with Table 7.1-2, only BTPs 21 and 22 need be addressed for the SPTM System. They are as follows:

(a) BTP ICSB 21- "Guidance for Application of Regulatory Guide 1.47"

The ~~ABWR design is a single unit~~ two units do not share SPTM equipment. *Therefore, Item B-2 of the BTP is not applicable. Otherwise, the SPTM System is in full compliance with this BTP.*

7.6.3 COL License Information

7.6.3.1 APRM Oscillation Monitoring Logic

The following standard supplement addresses COL License Information Item 7.2.

There are no departures from the fuel design licensing basis that are described in the reference ABWR DCD, including the core thermal hydraulic design described in Section 4.4. The APRM oscillation logic is designed in accordance with the BWR Owners Group Stability Option III and described in Subsection 7.6.1.1.2.2.

Table 7.6-1 SRNM Trip Function Summary

Trip Function	Trip Setpoint (Nominal)	Action
SRNM Short Period Trip	11 seconds	Scram‡ (bypassed in RUN ~~& REFUEL~~) (no scram function in counting range)
SRNM Period Withdrawal Permissive	56 seconds	Warning*f* (bypassed in ~~RVN~~**RUN)**

‡ Scram action only active in MSV range, which is defined as above 1 x 10-4% power.

f Conditions for activation will be defined in the technical specifications.

Table 7.6-2 APRM Trip Function Summary

Trip Function	Trip Setpoint (Nominal)	Action
(b) OPRM Trip Function		
Period-Based Trip (S_P)	$S=S_P=1.10$**	Scram*f*
OPRM Inoperative Trip	**1. LPRM input too few** **2. Self-test fault** **3. Watchdog timer timed out** **4. Loss of power**	**Scram*f***

** Other Pre-Trip Condition parameters of the algorithm are:

T_{min}=1 s, T_{max}=3.5 s, $\pm t_{error}$~~=*0.15s*~~ **[0.100 - 0.300s],** N_P=10.
(For details see Figure 7.6-14).

Table 7.6-5 Reactor Operator Information for NMS

(4) Certain NMS-related information, available on the main control panel, is implemented in software which is independent of the ~~*process computer*~~**plant computer functions**. This information is listed below.
(5) ~~*CRT*~~**VDU** displays, which are part of the performance monitoring and control system, provide certain NMS-related displays and controls on the main control panel which are listed below:
(ii) SRNM ATWS permissive
(qq) APRM ATWS permissive
Acronyms ~~*CRT Cathode Ray Tube*~~ **VDU Video Display Unit**

The following figures are located in Chapter 21:

- Figure 7.6-1 Neutron Monitoring System IED (Sheets 1 - 4)
- Figure 7.6-2 Neutron Monitoring System IBD (Sheets 1, 9,9a, 9b, 14)
- Figure 7.6-5 Process Radiation Monitoring System IED (Sheets 1 - 10)
- Figure 7.6-11 Suppression Pool Temperature Monitoring System IED (Sheets 1, 3)

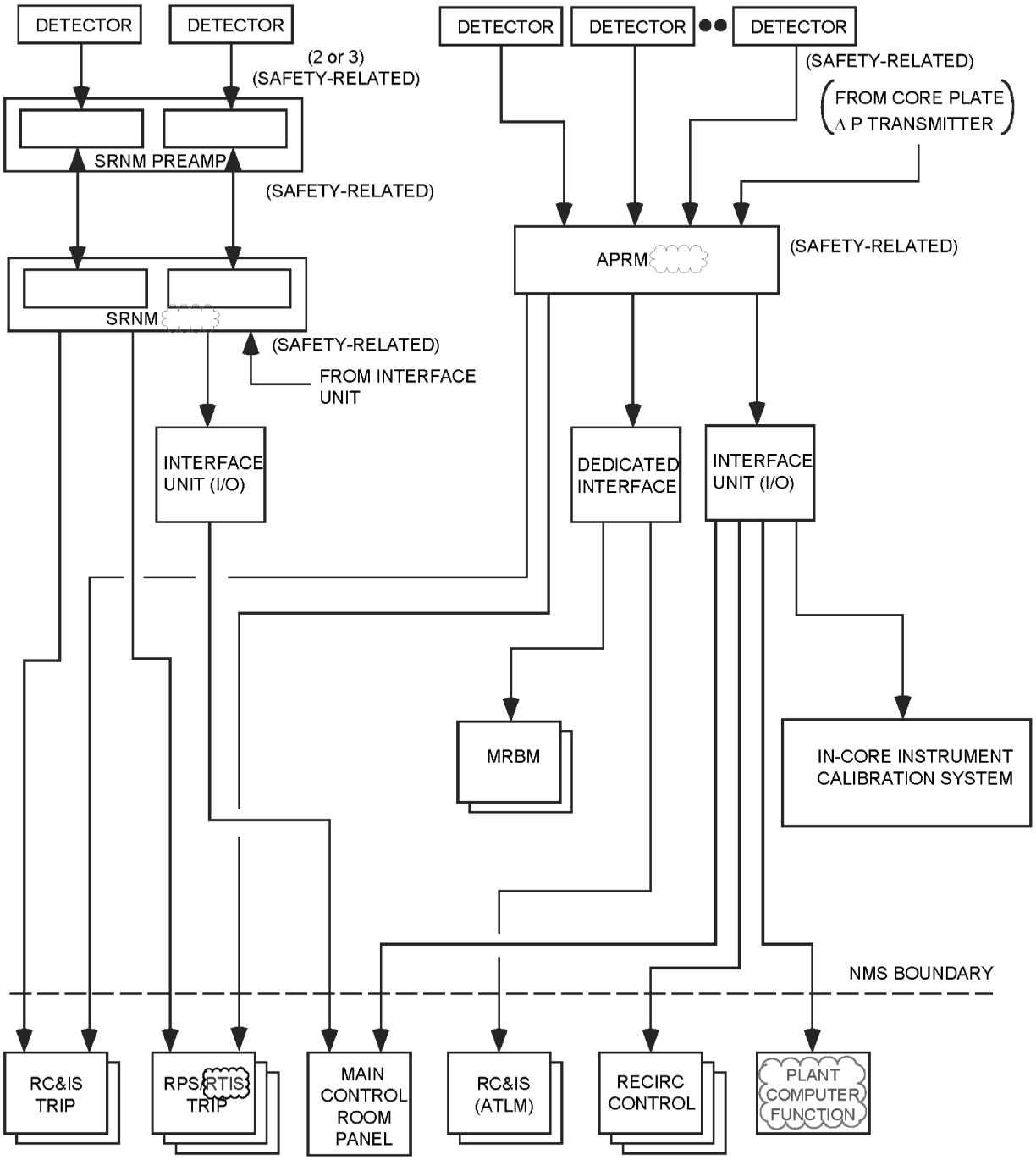

Figure 7.6-4a Basic Configuration of a Typical Neutron Monitoring System Division

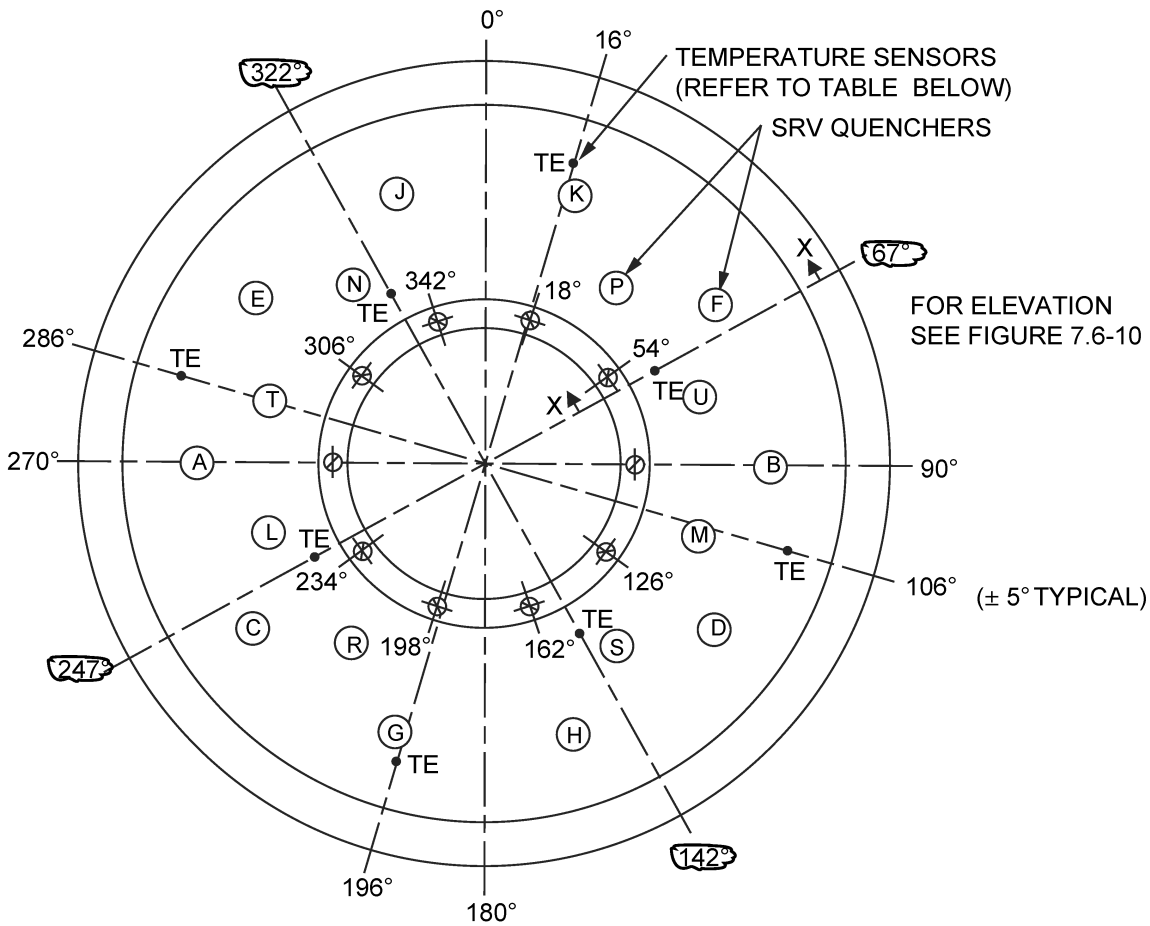

	DIVISION I	DIVISION II	DIVISION III	DIVISION IV
16°	TE-001A,E,J,N		TE-001C,G,L,R	
67°		TE-002B,F,K,P		TE-002D,H,M,S
106°		TE-003B,F,K,P		TE-003D,H,M,S
142°	TE-004A,E,J,N		TE-004C,G,L,R	
196°	TE-005A,E,J,N		TE-005C,G,L,R	
247°		TE-006B,F,K,P		TE-006D,H,M,S
286°		TE-007B,F,K,P		TE-007D,H,M,S
322°	TE-008A,E,J,N		TE-008C,G,L,R	

Figure 7.6-9 Instrumentation Location Definition for the Suppression Pool Temperature Monitoring System

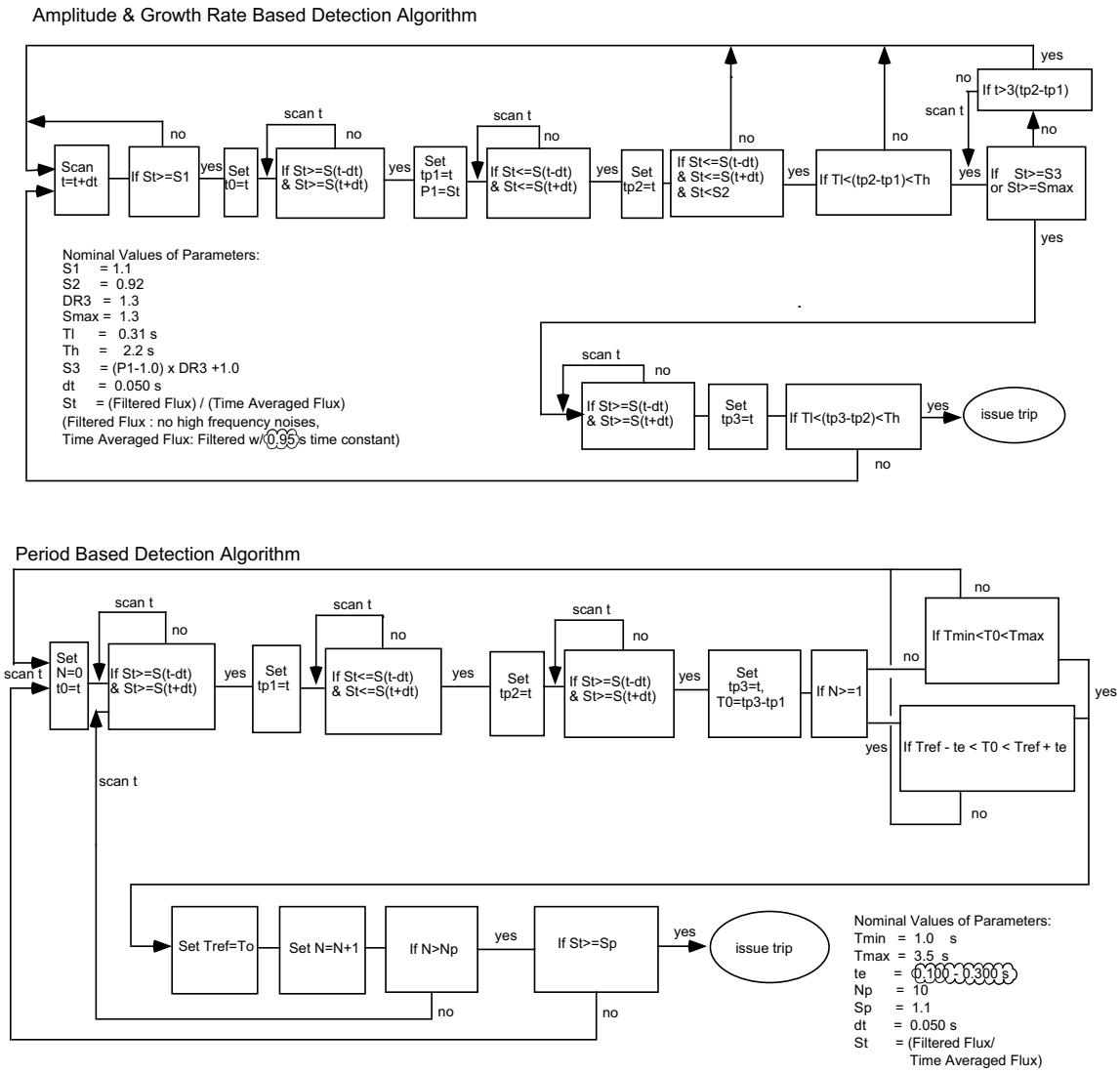

Figure 7.6-14 OPRM Logic

7.6S Interlock Systems Important to Safety

Subsections 7.4.1.3 (items 7 and 11), 7.6.1.3, 7.6.2.3, and Table 7.4-1 address interlock functions important to safety.

7.7 Control Systems Not Required for Safety

The information in this section of the reference ABWR DCD, including all subsections and figures, as modified by the STP Nuclear Operating Company Application to Amend the Design Certification rule for the U.S. Advanced Boiling Water Reactor (ABWR), "ABWR STP Aircraft Impact Assessment (AIA) Amendment Revision 3," dated September 23, 2010 is incorporated by reference with the following departures and supplements.

STD DEP T1 3.4-1 (Figures 7.7-2, 7.7-3, 7.7-4, 7.7-5, 7.7-7, 7.7-8, 7.7-9, 7.7-11)

STD DEP 5.4-1 (Figures 7.7-8, 7.7-9)

STD DEP 7.7-1

STD DEP 7.7-2

STD DEP 7.7-3

STD DEP 7.7-4

STD DEP 7.7-5

STD DEP 7.7-6

STD DEP 7.7-7 (Figures 7.7-2, 7.7-3)

STD DEP 7.7-9

STD DEP 7.7-10

STD DEP 7.7-11

STD DEP 7.7-12

STD DEP 7.7-13

STD DEP 7.7-14

STD DEP 7.7-18

STD DEP 7.7-20 (Figures 7.7-5, 7.7-7, 7.7-11)

STD DEP 7.7-22

STD DEP 7.7-23

STD DEP 7.7-24 (Figures 7.7-11, 7.7-12, 7.7-13)

STD DEP 7.7-27 (Table 7.7-1)

STD DEP 8.3-1

STD DEP 9.5-3

STD DEP 10.4-5 (Figures 7.7-7, 7.7-8, 7.7-9)

STD DEP 1.8-1

STD DEP Admin

7.7.1 Description

STD DEP T1 3.4-1

STD DEP Admin

- ~~*Process Computer System*~~ Plant Computer Function
- *Neutron Monitoring System—ATIP* and MRBM *Subsystems*
- ~~*Non Essential Multiplexing System*~~ Plant Data Network

7.7.1.1 Nuclear Boiler System—Reactor Vessel Instrumentation

STD DEP 7.7-1

STD DEP 7.7-2

STD DEP 7.7-3

STD DEP Admin

(6) Reactor Vessel Water Level

(e) Reactor Well Water Level Range

This range uses the RPV tap below the top of the active fuel. The zero of the instrument is the top of the active fuel. The temperature and pressure condition that is used for the calibration is 0 MPaG and 48.9°C water in the vessel. The water level measurement design is the pressure device which measures static water pressure inside the vessel and converts to a water level indication. This range is used to monitor the reactor water level when the reactor vessel head is removed and the reactor system is flooded during the refueling outage.

The condensate reference chamber for the narrow range and wide range water level range is common as discussed in Section 7.3.

The concern that non-condensable gasses may build-up in the water column in the reactor vessel reference leg water level instrument lines, i.e., the reactor vessel instrument lines at the elevation near the main steam line

nozzles, has been addressed by continually flushing these instrument lines with water supplied by the Control Rod Drive (CRD) System for those instrument lines with a condensing chamber. This applies to (a) through (d) above.

Reactor water level instrumentation that initiates safety systems and engineered safeguards systems is discussed in Subsections 7.2.1 and 7.3.1. Reactor water level instrumentation that is used as part of the Feedwater Control System is discussed in Subsection 7.7.1.4.

~~*The concern that non-condensable gasses may build-up in the water column in the reactor vessel reference leg water level instrument lines, i.e., the reactor vessel instrument lines at the elevation near the main steam line nozzles, has been addressed by continually flushing these instrument lines with water supplied by the Control Rod Drive (CRD) System.*~~

(8) Reactor Vessel Pressure

(c) Pressure transmitters ~~and recorders~~ used for feedwater control are discussed in Subsection 7.7.1.4.

(10) Safety/Relief Valve Seal Leak Detection

Thermocouples are located in the discharge exhaust pipe of the safety/relief valve. The temperature signal goes to a ~~multipoint recorder with an~~ historian function. An *alarm ~~and~~ will be activated by any temperature in excess of a set temperature signaling that one of the SRV seats has started to leak.*

(11) Other Instruments

The feedwater temperature is measured and transmitted to the main control room.

~~*The feedwater turbidity is monitored and the signal is transmitted to the main control room for recording.*~~

(15) Reactor Operator Information

The information that the operator has at his disposal from the instrumentation discussed in this subsection is discussed below:

(b) The core plate differential pressure provides a signal to the ~~process computer~~ historian function*.*

(f) The discharge temperatures of all the safety/relief valves are shown on a ~~multipoint recorder~~ historian function *in the control room. Any temperature point that has exceeded the trip setting will turn on an annunciator, indicating that a SRV seat has started to leak.*

(g) ~~Feedwater turbidity is recorded in the main control room. The recorder will turn on an annunciator in the main control room for either a high or low signal.~~Not Used

(16) Setpoints

The annunciator alarm setpoints for the reactor head seal leak detection and SRV seat leak detection~~, and feedwater corrosion product (turbidity) monitor~~ are set so the sensitivity to the variable being measured will provide adequate information.

(b) Level transmitters and trip actuators for initiating containment or vessel isolation are discussed in Subsection ~~7.3.1.2~~ 7.3.1.1.2.

7.7.1.2 Rod Control and Information System—Instrumentation and Controls

STD DEP T1 3.4-1

STD DEP 7.7-4

STD DEP 7.7-5

STD DEP 7.7-6

STD DEP 7.7-7

STD DEP 7.7-9

(1) System Identification

The main objective of the Rod Control and Information System (RCIS) is to provide the capability to control the fine motion control rod drive (FMCRD) motors of the Control Rod Drive (CRD) System (explained in Sections 4.6.1 and 4.6.2) to permit changes in core reactivity so that reactor power level and power distribution can be controlled.

The RCIS performs the following functions:

(a) Controls changes to the core reactivity, and thereby reactor power, by moving neutron absorbing control rods within the reactor core as initiated by:

(i) The plant operator, when the RCIS is placed in manual or semiautomatic mode of operation

(ii) ~~The Power Generation and Control System (PGCS) when the PGCS, automatic power regulator (APR), and RCIS are in automatic mode~~ The automatic rod movement mode of the automatic power regulator (APR), when RCIS is placed in the automatic mode of operation.

(b) ~~*Provides summary display information for the plant operator, indicative of aggregated control rod positions, status of the control rods, and the FMCRDs on the RCIS dedicated operator interface (DOI).*~~ Displays summary information for the plant operator about positions of the control rods in the core and status of the FMCRDs and RCIS. This summary information is provided by a RCIS dedicated operator interface (DOI) on the main control panel.

(c) *Provides FMCRD status and control rod position and status data to other plant systems which require such data (e.g., the* Plant Computer Function ~~*plant process computer system*~~*).*

(f) *Provides the capability for insertion of all rods by an alternate and diverse method, based on receiving* ~~*a*~~ *command* signals *from the Recirculation Flow Control System (RFCS). This function is called the alternate rod insertion (ARI) function.*

(g) *Provides for insertion of selected control rods for core thermal-hydraulic stability control or for mitigation of a loss of feedwater heating event; called the selected control rod run-in (SCRRI) function, based on receiving SCRRI command* signals *from the RFCS.*

(2) *System Description*

The RCIS is a dual redundant system consisting of two independent channels for normal monitoring of control rod positions and executing control rod movement commands. ~~*Each channel receives separate input signals and both channels perform the same function. Disagreement between the two channels results in rod motion inhibit.*~~ Under normal conditions, each channel receives separate input signals and both channels perform the same functions. The outputs of the two channels are continuously compared. For normal functions of enforcing and monitoring control rod positions and emergency rod insertion, the outputs of the two channels must be in agreement. Any sustained disagreement between the two channels would result in a rod block. However, when the conditions for generating a rod block signal in a single channel are satisfied, that channel alone can issue a rod block signal. For the FMCRD emergency insertion functions (scram-follow, ARI, SCRRI), 3-out-of-3 logic is used in the inverter control logic with the additional input signal coming from the associated emergency rod insertion panels. An automatic single channel bypass feature (only activated when an emergency insertion function is activated) is also provided to assure high availability for the emergency insertion functions when a single channel failure condition exists.

Failure or malfunction of RCIS has no impact on the hydraulic scram function of CRD. The circuitry for normal insertion and withdrawal of control rods in RCIS is completely independent of the Reactor Trip and Isolation System (RTIS) circuitry controlling the scram valves. This separation of the RPS

scram function of the RTIS and RCIS normal rod control functions prevents failure in the RCIS circuitry from affecting the scram circuitry.

The RCIS consists of several different types of cabinets (or panels), which contain special electronic/electrical equipment modules for performing RCIS logic located in the Reactor Building and Control Building and a dedicated operator interface (DOI) on the Main Control Panel in the Main Control Room (MCR). The RCIS DOI provides summary information to the plant operator with respect to control rod positions, FMCRD and RCIS status and hydraulic control unit (HCU) status. Controls are also provided for performing normal rod movement functions, bypassing of major RCIS subsystems, performing CRD surveillance tests, and resetting RCIS trips and most abnormal status conditions~~*and a dedicated operator interface on the main control panel in the control room*~~*. There are* ~~*four*~~ nine *types of electronic/electrical cabinets that make up the RCIS:*

(a) Rods Action Control ~~*Cabinet (RACC)*~~ Subsystem (RACS) Cabinets

~~*There are two RACCs consisting of RACC-Channel A and RACC-Channel B, that provide for a dual redundant architecture. Each RACC subsystem consists of three main functional subsystems, as follows:*~~

~~*(i) Automated Thermal Limit Monitor (ATLM)*~~

~~*(ii) Rod Worth Minimizer (RWM)*~~

~~*(iii) Rod Action and Position Information (RAPI)*~~

There are two types of cabinets in the back-panel area referred to as the RACS, consisting of a rod action and positioning information (RAPI) panel and an ATLM/RWM panel, which provide for a dual-redundant architecture. The RAPI panel consists of RAPI-A with the channel A logic and RAPI-B with the channel B logic. In addition, the RAPI panel includes the RAPI DOI, which displays the same information that is available on the RCIS DOI in the MCR. The RAPI DOI also serves as a backup for the RCIS DOI control capabilities, should the RCIS DOI become unavailable. A hard switch located in the RAPI panel is used to change the selection of DOI control operation capability between the RCIS DOI and the RAPI DOI (i.e. only one of these DOIs can be selected for control capability at any given time).

There is also a dedicated RCIS data communication network monitoring feature located in the RAPI panels for providing direct hardwired outputs to RFCS for RIP runback initiation upon detection of an all FMCRD run-in (i.e. scram-follow or ARI function) command condition.

The ATLM/RWM panel contains two channels of logic for the automatic thermal limit monitor (ATLM) and the rod worth minimizer (RWM).

(b) Remote Communication Cabinets (RCC)

~~*The RCCs contain a dual channel file control module (FCM) that interfaces with the rod server modules (RSMs) that are contained in the same cabinets, and RAPI in the control room.*~~ The RCCs contains a rod server module (RSM). The RSM interfaces with the RAPI subsystems in the MCR, via the dedicated RCIS multiplexing network. Each RSM is composed of two Rod Server Processing Channels (RSPC A and B) so that there is a dual-redundant logic design for each RSM and associated Synchro-to-Digital Converters (SDCs A and B) that provide for conversion of the Synchro A and Synchro B analog signals into a two independent digital representations of the absolute position of the corresponding FMCRD. Both RSPCs receive the digital representations from both SDCs for use in the RSPC control and monitoring logic.

(c) Fine Motion Driver Cabinets (FMDC)

The FMDCs consist of several inverter controllers (ICs) and stepping motor driver modules (SMDMs). Each SMDM contains an electronic converter/inverter to convert incoming three-phase AC power into DC and inverts the DC power to variable voltage/frequency output *power* ~~*pulses for*~~ provided to *the FMCRD stepping motor* to accomplish rod movement. The IC includes logic to process rod movement commands received from the associated RSPCs in a RCC. Also, IC and SMDM status signals are also provided to the associated RSPCs. Each IC also receives a separate discrete input signal from an Emergency Rod Insertion Panel that is used in the IC logic for providing the emergency rod insertion movement functions (i.e. scram-follow, ARI or SCRRI).

(d) Rod Brake Controller Cabinets (RBCC)

The RBCCs contain electrical and/or electronic logic and other associated electrical equipment for the proper operation of the FMCRD brakes. Signals for brake disengagement or engagement are received from the associated rod server module, and the brake controller logic provides two separate (channel A and channel B) brake status signals to its corresponding rod server module.

(e) Emergency Rod Insertion Control Panel

The emergency rod insertion control panel is located in the back-panel area of the MCR. It serves as an additional logic panel to contain relays (or solid-state equivalent) hardware needed to transmit discrete output signals to the emergency rod insertion panels in the Reactor Building (RB). The discrete output signals are activated based upon input signals received from the RPS related portion of the RTIS panels that indicate a scram-follow function is active or based upon input signals received from the RFCS that indicate a ARI function or SCRRI function

is active or by input signals from the two manual SCRRI pushbuttons on the main control panel.

(f) Emergency Rod Insertion Panels

The emergency rod insertion panels are located in the reactor building and provide discrete output signals to the inverter controllers in the FMDCs. The discrete output signals are activated based upon input signals received from the emergency rod insertion control panel in the MCR and indicate a scram-follow function, an ARI function or SCRRI function is active. The emergency insertion condition is considered active if any one of these three rod insertion functions is active.

(g) Scram Time Recording Panels (STRPs)

The scram time recording panels (STRPs), located in the RB, monitor the FMCRD position reed switch status using reed switch sensor modules (RSSMs) and communicate this information to the RAPI. Also, the STRPs automatically record and time tag FMCRD scram timing position reed switch status changes by RCIS clock either: 1) after initiation of an individual HCU scram test at the RPS Scram Time Test Panel, or 2) after a full-core reactor scram has been initiated. The recorded scram timing data can be transmitted to the STRAP in the MCR back-panel

(h) Scram Time Recording and Analysis Panel (STRAP)

The STRAP, located in the MCR back-panel area, receives scram timing position information from the STRPs which can be used for comparing the recorded scram timing performance results to the applicable Technical Specification requirements. This information can also be transmitted to the Plant Computer Function (PCF) for further data analysis and archiving.

(i) Rod Action and Position Information (RAPI) Auxiliary Panels

RAPI Auxiliary Panels, located in the Reactor Building, provide output signals to open a purge water valve whenever either FMCRD associated with the corresponding HCU receives an insertion command from RAPI subsystem. These panels also monitor scram valve position status as well as HCU accumulator water pressure and level status (i.e. normal or abnormal).

(3) RCIS Multiplexing Network

The dedicated *RCIS multiplexing network consists of two* ~~*independent channels (A and B) of fiber-optic communication links between the RACCs (channels A and B), and the dual channel file control modules located in the remote communication cabinets.*~~ separate channels. Fiber-optic

communication links are used in this dedicated multiplexing network to handle communication between the RACS and the RSPCs in the RCCs, communication between the STRPs and the RACS, and communication between the RAPI auxiliary panels (for HCU purge water valve control and HCU status monitoring) and the RACS.

~~*The plant essential multiplexing network interfaces with FMCRD dual redundant separation switches (A/B) and provides the appropriate status signals to the RACCs to be used in the RCIS logic for initiating rod block signals if a separation occurs. The essential multiplexing network is not part of the RCIS.*~~

The FMCRD dual redundant separation switches (A and B) provide the appropriate status signals to the RACS Cabinets to be used in the RCIS logic for initiating rod block signals for the appropriate FMCRD if a separation occurs. The CRD system provides these signals to the RAPI signal interface units (SIUs) of the RCIS. Each RAPI SIU transmits these status signals to the associated RAPI channel for use in the RAPI rod block logic.

(5) Power Sources

(a) Normal

The RCC contains the necessary redundant power supplies for channels A and B of the rod server modules, ~~file control modules,~~ electrical equipment, and cooling fans (if required).

(6) RCIS Scope

The RCIS scope includes the following equipment:

(a) All the electrical/electronic equipment contained in the RACS cabinets *~~RACCs~~, the RCCs, the FMDCs, ~~and~~ the RBCCs*, the STRPs, the STRAP, the emergency rod insertion panels and the emergency rod insertion control panel*.*

(b) The dedicated *RCIS multiplexing network equipment.*

(7) Integral Functional Design

The Control Rod Drive (CRD) System performs the following functions:

(d) Provides for electromechanical insertion of selected control rods for core thermal/hydraulic stability control or for mitigation of a loss of feedwater heating event*.*

7.7.1.2.1 Control Rod Drive Control System Interfaces

STD DEP T1 3.4-1

STD DEP 7.7-7

STD DEP 7.7-10

STD DEP 7.7-11

STD DEP 7.7-12

STD DEP 7.7-13

STD DEP 7.7-14

STD DEP Admin

(1) ~~*Introduction*~~ Single Rod Movement

When an operator selects a control rod for motion (Figure 7.7-3), the operator first selects the manual rod movement mode at the dedicated RCIS operator panel, by depressing the manual mode switch to place the RCIS in manual mode. Then the operator depresses the select pushbutton for either single rod movement or for ganged rod movement. The operator must then select a specific rod (or a gang) to be moved ~~*at the normal operational manual mode CRT display under the control of the Performance Monitoring and Control System (PMCS).*~~ using the RCIS DOI on the main control room panel.

~~*A CRT display generated by PMC presents to the operator a full core array of all 205 control rods in addition to 52 local power range monitors (LPRMs) schematically as a group of boxes.*~~

~~*Each box represents a control rod containing the core coordinates and vertical rod position of that rod in white numbers on a black background. The vertical rod position information is normally not visible but becomes visible in response to actuation of various rod status and position requestor poke points. The core coordinates are always visible to the operator.*~~

~~*The CRT display*~~ The RCIS DOI *provides the operator with a capability to move a single rod or a ganged selection.* ~~*For this discussion, the operator selects a single rod for withdrawal. Four*~~ Three *rod movement commands* ~~*(poke points)*~~ *serve as a means to initiate all rod movements controlled from this display. They are identified as* ~~*"SINGLE ROD", "ROD GANG",*~~ *"STEP"*, "NOTCH", and ~~*or*~~ *"CONTINUOUS"*~~*, and "IN" or "OUT"*~~*.*

~~*The operator first identifies the rod status from the rod status requestor information display, then makes a decision for either a withdrawal or an insertion of a control rod and sets up the display. The operator can request rod status information by actuating poke points on the CRT for the required*~~

~~rod.~~ Then, to request the desired movement in the selected movement mode, the operator then activates “withdraw” (or "insert") movement command by activating associated hard pushbutton switches located adjacent to the RCIS DOI on the main control panel.

(2) Withdrawal Cycle

Following is a description of the selected rod withdrawal movement in the manual mode.

After operator selection of a rod and rod movement mode, which are “STEP,” NOTCH,” or “CONTINUOUS,” on the RCIS DOI on the main control panel, then the operator depresses the “withdraw” hard pushbutton switch. If a STEP” movement is initiated by the operator for a selected single rod, the rod moves a nominal distance of 18.3 mm, with the associated rod step position value displayed on the RCIS DOI corresponding to the number of “STEP” withdrawal movements from the normal full-in position value. A rod at normal full-in position has an associated rod step position value of “0” steps withdrawn. A rod at normal full-out position has an associated rod step position value of “200” steps withdrawn, as the normal full-out position value is 3660 mm below the normal full-in position value of 0 mm.

If a “NOTCH” movement is initiated by the operator for a selected single rod, the rod moves a nominal distance of 73.2 mm (i.e., four times the nominal step movement distance), with the restriction that the nominal stopping position for the “NOTCH” movement in terms of the distance withdrawn from the normal full-in position is an integer multiple of 73.2 mm. for example, if the selected rod were initially at a step position value of “6” steps withdrawn and one “NOTCH” withdrawal movement is selected and performed, the selected rod would stop at a step position value of “8” steps withdrawn. If a “NOTCH” insert movement was then performed, the selected rod would stop at a step position value of “4” steps.

If a “CONTINUOUS” movement is initiated by the operator for a selected single rod, the rod target stopping position value is continuously updated to an integer multiple of 18.3 mm as long as the operator continuously depresses the “withdraw” (or “insert”) movement pushbutton. For example, if the selected rod were initially at a step position value of “8” steps withdrawn and a “CONTINUOUS” withdrawal movement is performed, the rod target stopping position value would be updated initially to “12” steps and then would be updated at a position which adds 4 steps to the current position. When the operator ceases to continuously depress the “withdraw” movement pushbutton in this case, the rod target stopping position value then no longer changes and the rod then moves to and stops upon reaching the applicable rod target stopping position value.

Manual gang movements in the “STEP,” NOTCH,” and “CONTINUOUS” movement modes would be accomplished in a similar manner to that

described above; however, all operable rods of the selected gang move simultaneously during movement operation. Also, normal manual rod movements are limited such that rod movement beyond normal full-in or full-out position is not allow unless RCIS is placed in a special test mode used for performing the CRD coupling check surveillance test.

During all of these operator selections for rod withdrawals there is continuous monitoring of the selection and movement by the Rod Action and Position Information (RAPI) function. The RAPI of the RCIS enforces the rod block function based upon signals internal or external to the system. If a rod block is activated while normal rod movements are underway, it can prevent desired rod movements or stop rod movements. This rod block function applies in both single rod movement and ganged rod movement modes.

The RAPI internal signals include those signals from the Automated Thermal Limit Monitor (ATLM) and Rod Worth Minimizer (RWM) subsystems of the RCIS. During normal RCIS operating conditions with no single channel bypass condition active, if there is any disagreement between the two channel logic of the subsystems of the RCIS, rod block signals are transmitted to the rod server module. Examples of external input signals which could cause rod withdrawal blocks include rod block signals from the Startup Range Neutron Monitor (SRNM) and the Average Power Range Monitor (APRM) subsystems of the Neutron Monitoring System (NMS) and Fine Motion Control Rod Drive (FMCRD) separation status signals from the CRD system to the RCIS. A complete list of the rod block conditions is provided later in this section.

When normal rod movements are performed, the RAPI of the RCIS transmits the appropriate rod movement command signals to rod server processing channel (RSPC) A and RSPC B of the rod server module (RSM) of the selected rod in the Remote Communication Cabinets (RCCs). The RSPCs transmit signals other corresponding inverter controller and transmit brake energization signals to the associated rod brake controller (RBC). The inverter controller then performs two-out-of-two voting on the command signals received and activates the proper power control signals to the stepping motor driver module (SMDM) to accomplish the FMCRD motor movement desired. The rod brake controller similarly performs two-out-of-two voting and mechanically releases the FMCRD brake just prior to start of FMCRD motor movement and then reengages the FMCRD brake after the normal rod movement is complete.

The Synchro-to-Digital Converters (SDCs) of the RSM also interfaces with instrumentation of the FMCRD (a subsystem of the CRD), collect absolute rod position for the corresponding FMCRD by converting the Synchro A and Synchro B analog signals into digital data representing the FMCRD rod position for use in the associated RSPCs' logic and transmission (via the RCIS dedicated multiplexing network) to the RAPI logic and for the RAPI to

transmit rod position data to other systems and subsystems and to the RCIS DOI.

~~*Following is a description of steps the operator performs at the RCIS dedicated operator's interface panel in selecting a rod for movement in the manual mode. The operator depresses the manual rod movement mode switch, which enables the RCIS for manual mode. The operator then verifies indicator/alarm status at the control panel for the following conditions:*~~

~~*(a) Reactor power level is below low power setpoint (LPSP).*~~

~~*(b) Manual rod movement indicator is illuminated.*~~

~~*(c) Verifies status of channel bypass conditions for RWM, RACS, and ATLM.*~~

~~*(d) RCIS trouble indicator is not illuminated.*~~

~~*(e) RCIS rod block status indicator is not illuminated.*~~

~~*(f) No audible alarms are present.*~~

~~*(g) Verify status of FMCRDs, for number rods, in "Full In" or "Full Out", "Latched Full In", or in an "Inoperable Bypass" condition.*~~

~~*Following is a description of steps an operator performs at the PMCS CRT display in selecting a single rod for continuous withdrawal with RCIS initially in manual mode. The detailed operations between the RCIS and the CRD System with specific response when various commands are transmitted are discussed.*~~

~~*The setup at the CRT display for continuous withdrawal of a single control rod is as follows:*~~

~~*- With top level CRT display, the operator requests the display of rod position data by actuating the rod position data poke points. The screen display changes to the RCIS normal operation/manual mode screen and shows all control rods and their positions. The screen display has other poke points for operating in the manual mode.*~~

~~*- Under rod command display, if it shows "IN" and "STEP", the operator can change the setup. A touch of "IN" poke point changes it to "OUT" and a touch of the "STEP" poke point changes it to "NOTCH" or to "CONTINUOUS" if "NOTCH" is touched. After proper selections are verified, the operator can then select the single rod by actuating the poke points for a "SINGLE ROD". The operator verifies the selections by observing the status indicators. The operator then follows up by touching the display array box representing the rod (ROD SELECTED) to be moved.*~~

~~This setup and action by the operator sends rod coordinates and other setup data to the PMCS. The data representing a single rod to be withdrawn is coded and stored in PMCS memory. The PMCS addresses the RCIS and sends the coded messages. The coded messages are received at the RCIS and stored in the Rod Position and Information Subsystem memory. The operator has an option to stop the rod movement by using the light pen. Touching the "SINGLE ROD" poke point a second time causes rod motion stop signals to be sent to the RCIS interface.~~

~~The information displayed to the operator at this time is the vertical position of the rod selected and it remains displayed until a new selection is made or the rod is deselected. The display array boxes representing all other rods in the core at this time dim to approximately half brightness.~~

~~The CRT display stores information in memory during the initial setup and transmits the information to the PMCS. When the operator initializes the last poke point (ROD SELECTED), the information stored in memory addressing the manual rod movement command signals in the PMCS are downloaded, as two independent signals, into channels A and B of the RCIS Rod Action and Position Information (RAPI) Subsystems.~~

~~The RCIS receives the two independent streams of data signals transmitted from the PMCS. The data are received and loaded into memory at the RAPI Subsystems (channel A/B). Both channel A/B are identical and perform the same functions. If there is a disagreement between A and B, the logic issues a rod motion inhibit signal. The operator has the capability to bypass certain functions in the manual mode.~~

~~The PMCS also sends data to the Automated Thermal Limit Monitor (ATLM) of the RCIS on the calculated fuel thermal operating limits and corresponding initial LPRM values when an ATLM setpoint update is requested.~~

~~The logic of the ATLM subsystem issues a rod block signal that is used in the RAPI System logic to enforce a rod block that prevents violation of the fuel thermal operating limits. The ATLM interfaces with and receives signals from the RAPI Subsystem control logic for rod position data, other plant data and control signals.~~

~~The ATLM interfaces with Recirculation Flow Control (RFC) System and when it trips, a signal is sent to the RFCS which would cause a flow increase block.~~

~~The ATLM also receives input signals, based upon the LPRMs and APRMs of the Neutron Monitoring System (NMS). The RAPI Subsystem logic enforces ATLM rod block signals to the RCIS rod server modules located in the remote communication cabinets. Either channel of an ATLM subsystem can independently cause a rod withdrawal block.~~

~~The Rod Worth Minimizer (RWM) Subsystem logic issues rod block signals that are used in the Rod Action Control Subsystem rod block logic to assure that absolute rod pattern restrictions are not violated (e.g., the ganged withdrawal sequence restrictions). The logic of the RWM also receives rod position data and control status signals from the logic of the RAPI Subsystem and feeds back RWM status signals.~~

~~The RCIS responds to data signals originating from the CRT displays of the PMCS for operator requested rod withdrawal or insertion commands.~~

~~The RAPI Subsystem of the RCIS enforces rod blocks based upon signals internal or external to the system.~~

~~The internal signals include those signals from any of the above MRBM, ARBM, RWM. If there is any disagreement between the two channel logic of the RAC and/or the RAPI subsystems of the RCIS, rod block signals are transmitted to the rod server module and sent to the PMCS.~~

~~External input signals which could cause rod blocks originate from the SRNM and PRNM Subsystems or from the four divisions of the essential multiplexing system, reflecting the status of separation switches of the FMCRDs.~~

~~After performing the required validity checks within each subsystem and verifying that there are no rod block conditions existing, the RAPI Subsystem of the RCIS transmits command data signals (representing the selection of a single rod for withdrawal via the RCIS multiplexing system channel A and channel B) to a dual channel file control module (FCM) located in a remote communication cabinet. The selected rod command withdrawal signals are received at the dual channel FCM and routed via channel A and channel B of the dual channel rod server modules (RSMs) and then are loaded into data buffers A and B of the inverter controller.~~

~~The FCM also interfaces with instrumentation of the FMCRD (a subsystem of the control rod drive system), collects data associated with the position reed switches and converts the synchro A and synchro B analog data into digital data for use in the RSM logic and transmission (via the RCIS multiplexing system) to the RAPI Subsystem logic.~~

~~The RSM, which consists of two rod server processing channels and one inverter controller, interfaces with the rod position instrumentation through its two processing channels and with the associated stepper motor driver module of the FMCRD System via the inverter controller. After receiving the proper command signals for a single rod to be withdrawn continuously, the inverter controller sends the proper motor power control information to the stepper motor driver module. In turn, the stepper motor driver module sends power pulses to the FMCRD motor.~~

~~*Each of the rod server processing channels A and B also interfaces with the rod brake controller to provide brake disengagement and/or engagement signals required for normal rod movement. This is based on two-out-of-two logic where both channels A and B of the RSM should agree, and on one-out-of-two logic for ARI and scram following functions.*~~

~~*Each rod server processing channel of the RCIS obtains rod position status information signals via hardwired interfaces with its associated FMCRD synchro and obtains additional rod position and status information via hardwired interfaces with the reed switches included in the FMCRD. The reed switch based position signals are mainly used for recording FMCRD scram timing analysis data. Each rod server processing channel exchanges the continuous synchro position information and transmits the data to the RAPI Subsystem of the RCIS for usage in its logic. This data is also used to provide position status signals to the PMCS and to the RCIS dedicated interface panel.*~~

(3) Insert Cycle

An operator action to insert a rod while in the manual mode would be processed in a similar manner as above. ~~*except that signals for an insertion of the rod would be decoded at the rod server module (RSM). On receiving the correct signals from the RSM, the stepper motor driver module would provide power pulses to the FMCRD motor such that control rod insertion would result.*~~

The control room operator uses the same controls for insertion of the control rods, except the "insert" hard pushbutton switch on the RCIS DOI is depressed. When a "STEP" insertion movement is selected and performed, the selected rod is inserted and stops at the next step position. When a "NOTCH" insertion movement is selected and performed, the selected rod is inserted and stops at the next notch position. A "CONTINUOUS" insertion movement is similar to "CONTINUOUS" withdrawal movement, except upon selection the nominal target position value decreases instead of increasing, while the "insert" movement pushbutton remains depressed.

(4) Ganged Rod ~~*Motion*~~ Movement

There are three means of controlling ganged rod ~~*motion*~~ movement*. The RCIS provides for automatic mode, semi-automatic, and manual mode.* ~~*When in the automatic mode of operation, commands for reactivity insertion or withdrawal are received from the Automatic Power Regulator (APR) System.*~~

The RCIS dedicated operator interface provides ~~*switches for an*~~ controls for activating the *automatic, semi-automatic, or manual rod movement mode of operation. When the system is in semi-automatic mode, all rod movements are controlled by the operator. However, the RCIS, by using a database called reference rod pull sequence (RRPS) and keeping track of the current*

*control rods' positions,~~ prompts the operator to the selection of the next gang~~*selects the gang automatically*.*

When the RCIS is in manual mode and ganged rod movement mode has also been chosen, if the operator selects a specific rod in a gang, the logic will automatically select all associated rods in that gang.

When the automatic mode is active, the RCIS responds to signals for rod movement request from the APR System. In this mode, the APR simply requests either reactivity insertion or withdrawal and either "step" or "continuous"*. The RCIS responds to this request by using the RRPS and the current rods positions and automatically selects and executes the withdrawal/insert commands for the next gang.*

In order for the automatic rod movement feature of the RCIS to be active, ~~the power generation control system must be in the automatic mode~~ ~~,~~ the automatic power regulator system must be in the ~~automatic~~ mode associated with CR operation*,~~ and the switch on the RCIS dedicated operator interface for automatic rod movement mode must be depressed. The operator has an option of discontinuing the automatic operation by placing either the PGCS/APR or RCIS mode switches back to manual mode,~~* the switch for automatic rod movement mode must have been activated, and there must be no abnormal conditions that prevent operation in the RCIS automatic mode. The operator has an option of discontinuing the automatic operation by placing either the RCIS mode switches back to manual mode or back to the semi-automatic mode.

(5) Ganged Withdrawal Sequence Restrictions

The RWM of the RCIS ensures adherence to certain ganged withdrawal sequence restrictions by generating a rod block signal for out-of-sequence rod withdrawals. These types of restrictions are specified as follows:

(a) The ganged rod mode consists of one or two sets of fixed control rod gang assignments. The two sets of rod gang assignments correspond to sequences A and B of the ABWR ganged withdrawal sequence~~, as specified in the reactivity control document~~. For either sequence, when all of groups 1 through 4 control rods only have been withdrawn, there is a checkerboard pattern in the reactor core of the rods fully withdrawn as opposed to the rods still fully-inserted. For Sequence A, the center control rod in the core would still be fully-inserted. For Sequence B, the center control rod in the core would be fully-withdrawn.

(b) The system allows up to 26-rod gangs, for control rods in rod groups 1, 2, 3, and 4, to be withdrawn simultaneously when the reactor is in the startup or run *mode. These withdrawals are permitted only under the following conditions:*

(i) Reactor power level is below the low power setpoint (LPSP).

(ii) A group 1, 2, 3, or 4 gang of rods is selected. Only one group at a time is allowed for normal rod movement.

(iii) Groups 1-4 may only be withdrawn ~~before~~if groups 5-10 are in the full-in position.

(iv) The other three groups (of groups 1-4) that are not selected must be either full-in or full-out. Groups 1-4 are withdrawn from the full-in position to the full-out position before another group is moved.

(v) The chosen alternative sequence for withdrawing the first four groups is consistent with one of the following allowable alternate sequences:

(a) (1, 2, 3, 4)

(b) (1, 2, 4, 3)

(c) (2, 1, 3, 4)

(d) (2, 1, 4, 3)

(e) (3, 4, 1, 2)

(f) (3, 4, 2, 1)

(g) (4, 3, 1, 2)

(h) (4, 3, 2, 1)

No sequences other that those indicated above are allowed within the logic of the ~~RCIS~~RWM. The logic of the ~~RCIS~~RWM also ensures that, when single rod movements of rods in groups 1-4 are made, they are in accordance with the above restrictions (e.g., if one of the rods from group 1 is withdrawn, all the other group 1 rods are to be withdrawn before withdrawal of rods in another group is permitted).

(vi) The ~~RCIS~~RWM logic enforces additional ganged withdrawal sequence restrictions when the reactor power level is below the low power level setpoint and the reactor mode switch is in STARTUP or RUN mode as follows:

(a) The ~~RCIS~~RWM logic prevents two groups of rods from being withdrawn simultaneously.

(b) Allows only groups 1-6 to be withdrawn as one single gang.

(c) *Assures that the maximum allowable difference between the leading and trailing operable control rods in each of groups*

3, 4, 7, 8, 9, and 10 to be within 152 ~~*146*~~ *mm when any operable rod in the group is less than* ~~*or equal to 0.914m*~~ 48 steps *withdrawn* from the normal full-in position*. This restriction is not applied to groups 1, 2, 5, and 6 or to any group when all operable rods in that group are greater than* or equal to 48 steps ~~*0.914m*~~ *withdrawn* from the normal full-in position*. This restriction applies to rod pull sequence (5)*(b)(v)*a through (5)*(b)(v)*d above.*

(d) *Assures that the maximum allowable difference between the leading and trailing operable control rods in each of groups 1, 2, 7, 8, 9, and 10 to be within* 152 ~~*146.4*~~ *mm when any operable rod in the group is less than* ~~*or equal to 0.914m*~~ 48 steps *withdrawn* from the normal full-in position*. This restriction is not applied to groups 3, 4, 5, and 6 or to any group when all operable rods in that group are greater than* or equal to 48 steps ~~*0.914m*~~ *withdrawn* from the normal full-in position*.The restriction applies to rod pull sequence (5)*(b)(v)*e through (5)*(b)(v)*h above.*

(e) *Enforces restrictions on withdrawal of rods in groups 5-10 if rods in group 7 or 8 are moved first. Movement of rod gangs in groups 9 and 10 are then blocked until all operable rods in groups* ~~*5, 6 and 7 or 8 are greater or equal to 0.914m withdrawn. The RCIS also enforces rod restrictions if rods in group 9 or 10 are moved first. Movement of rod gangs in groups 7 and 8 is blocked until all operable rods in group 5, 6 and 9 or 10 are greater than or equal to 0.914m withdrawn.*~~ 5 or 6 are greater than or equal to 48 steps withdrawn from the full-in position AND Group 7 or 8 are greater than or equal to 48 steps withdrawn from the full-in position.

(f) Enforces restrictions on withdrawal of rods in groups 5-10 if rods in group 9 or 10 are moved first. Movement of rod gangs in groups 7 and 8 are then blocked until all operable rods in groups 5 or 6 are greater than or equal to 48 steps withdrawn from the full-in position AND Group 9 or 10 are greater than or equal to 48 steps withdrawn from the full-in position.

(6) Establishment of Reference Rod Pull Sequence (RRPS)

The reference rod pull sequence is normally established before plant startup and stored in memory ~~*at the Performance Monitoring and Control System (PMCS)*~~ associated with the Plant Computer Function (PCF)*. The* ~~*PMCS*~~ PCF *allows modifications to be made to the RRPS through operator actions. The* ~~*PMCS*~~ PCF *provides compliance verification of the changes to the RRPS, with the ganged withdrawal sequence requirements.*

The RCIS provides a capability for an operator to request a download of the RRPS from the ~~PMCS, a subsystem of the Process Computer System~~ PCF. The new RRPS data is loaded into the RAPI ~~System~~ Subsystem. Download of the new RRPS data can only be completed when the RCIS is in manual rod movement mode and when ~~both keylock permissive switches located at each rod action control cabinet are activated~~ a permissive switch located at the RAPI panel is activated.

The RCIS provides feedback signals to the ~~PMCS~~ PCF for successful completion of downloaded RRPS data for displaying on the ~~CRT~~ nonsafety display.

A rod ~~Rod~~ withdrawal block ~~signals are~~ signal is generated whenever selected ~~single or~~ ganged rod movements differ from those allowed by the RRPS, when the RCIS is in automatic or semi-automatic rod movement mode.

The RCIS ~~sounds~~ activates an audible alarm at the operators panel for a RRPS violation.

(7) Rod Block Function

The rod block logic of the RCIS, upon receipt of input signals from other systems and internal subsystems, inhibits movement of control rods.

All Class 1E systems rod block signals to the RCIS are optically isolated. ~~The rod block signals change the state of the light emitting diode at the external interface of an isolator. The light crosses the boundary of the isolator to the interface of the RCIS where a photo transistor changes state, thereby communicating the information to the logic within the RCIS.~~ This provides complete isolation while keeping electrical failures from propagating into the RCIS and vice versa.

The presence of any rod block signal, in either channel or both channels of the RCIS logic, causes the automatic changeover from automatic mode to manual mode. The automatic rod movement mode can be restored by taking the appropriate action to clear the rod block and by using the selector switch to restore the automatic rod movement mode.

If either channel or both channels of the RCIS logic receive(s) a signal from any of the following type of conditions, a rod block is initiated:

(a) Rod separation, only for those rod(s) for which separation is detected.

(b) ~~Reactor in SHUTDOWN mode (all control rods).~~ Reactor mode switch in SHUTDOWN (rod withdrawal block for all control rods, applicable when the RPS reactor mode switch is in SHUTDOWN).

(c) ~~*SRNM period alarm (all control rods, but not applicable when reactor in RUN mode).*~~ Startup Range Neutron Monitor (SRNM) withdrawal block (rod withdrawal block for all control rods, not applicable when the RPS reactor mode switch is in RUN).

(d) ~~*SRNM downscale alarm or SRNM upscale alarm or APRM set down upscale alarm (all control rods, but not applicable when in RUN mode).*~~ Average Power Range Monitor (APRM) withdrawal block (rod withdrawal block for all control rods).

(e) ~~*SRNM inoperative (all control rods, but not applicable when reactor is in RUN mode).*~~ CRD charging water low pressure (rod withdrawal block for all control rods).

(f) ~~*APRM downscale (all control rods, only applicable when reactor in RUN mode).*~~ CRD charging water low-pressure trip bypass (rod withdrawal block for all control rods).

(g) ~~*Flow-biased APRM rod block (all control rods, only applicable when reactor in RUN mode).*~~ RWM withdrawal block (rod withdrawal block for all control rods, applicable below the Low Power Setpoint).

(h) ~~*APRM inoperative (all control rods, only applicable when reactor in RUN mode).*~~ RWM insert block (rod insertion block for all control rods, applicable below the Low Power Setpoint).

(i) ~~*Low CRD charging header pressure (all control rods).*~~ ATLM withdrawal block (rod withdrawal block for all control rods, not applicable below the Low Power Setpoint).

(j) ~~*Low CRD charging header pressure trip function bypass switches of the reactor protection system are in a bypass position (all control rods).*~~ Multi-channel Rod Block Monitor (MRBM) withdrawal block (rod withdrawal block for all control rods, not applicable below the Low Power Setpoint).

(k) ~~*Violation of ganged withdrawal sequence restrictions (all control rods in the selected gang or the selected control rod if the single rod movement mode is being used; applicable below the low power setpoint).*~~ RFCS withdrawal block (rod withdrawal block for all control rods).

(l) ~~*Automated Thermal Limit Monitor (ATLM) rod block (all control rods, only applicable above the low power setpoint).*~~ Gang large deviation (i.e., gang misalignment) withdrawal block (rod withdrawal block for all operable control rods of the selected gang, applicable when RCIS GANG mode selection is active).

(m) ~~*Multi-channel Rod Block Monitor (MRBM) rod block (all control rods, only applicable above the low power setpoint).*~~ REFUEL mode

withdrawal block (rod withdrawal block for all control rods, applicable when the RPS reactor mode switch is in REFUEL).

(n) ~~*ATLM trouble (all control rods, only applicable above the low power setpoint).*~~ Not Used

(o) ~~*RWM trouble (all control rods, applicable below the low power setpoint).*~~ Rod Action and Position Information (RAPI) trouble (rod withdrawal block and rod insertion block for all control rods).

(p) ~~*MRBM inoperative (all control rods, only applicable above the low power setpoint).*~~ Not Used

(q) ~~*Rod action position information trouble (all control rods).*~~ Not Used

~~*(r)*~~ ~~*Two or more recirculation pump trips when reactor power is above approximately 25% of rated and core flow is below approximately 36% or rated. The logic to generate this rod block resides in the RFCS and the discrete rod block signal is sent to the RCIS from the RFCS.*~~Not Used

~~*(s)*~~ ~~*Refueling platform control computer interlock rod block (all control rods, only applicable when the reactor is in the refuel mode).*~~Not Used

(t) *Reactor SCRAM* follow *condition exists (*rod withdrawal block for *all control rods).*

(u) *Existence of ARI or SCRRI condition (*rod withdrawal block for *all control rods).*

~~*(v)*~~ ~~*Gang misalignment [i.e. position difference between any two gang members of more than 38.1 mm (all control rods)].*~~Not Used

The RCIS enforces all rod blocks until the rod block condition is cleared. The bypass capabilities of the RCIS permit clearing certain rod block conditions that are caused by failures or problems that exist in only one channel of the logic.

(9) RCIS Bypass Capabilities

The RCIS provides the capability to bypass synchro A (or synchro B)*, if it is bad, and select synchro B* (or synchro A) *for providing rod position data to both channels of the RCIS.* ~~*The number and distribution of bypassed synchros are procedurally controlled by applicable plant Technical Specifications.*~~ The RCIS logic prevents the simultaneous bypassing of both synchro signals for an individual FMCRD.

The RCIS allows the operator to completely bypass up to eight control rods by declaring them "Inoperable" and placing them in a bypass condition.

Through operator action, an update in the status of the control rods placed into "inoperable" bypassed condition ~~is available at the CRT display. At the display, the operator can request the data to be downloaded into the memory of the RAPI Subsystem logic with confirmation of a successful download completion signal being sent back to the CRT display.~~ can be performed at the RCIS DOI.

Download of a new RCIS "Inoperable Bypass Status" to the RAPI Subsystem is only allowed when the RCIS is in a manual rod movement mode and when ~~both keylock permissive switches are activated at the RCIS panels~~ the bypass permissive switch located near the RCIS DOI is activated*.*

The operator can substitute a position for the rod that has been placed in a bypass state into both channels of the RCIS, if the substitute position feature is used. The substituted rod position value entered by the operator is used as the effective measured rod position that is stored in both ~~rod action control~~ RAPI *channels and sent to other* subsystems of the RCIS and to other plant *systems (e.g., the ~~Process Computer~~* Plant Information and Control *System).*

For purposes of conducting ~~periodical~~ periodic *inspections on FMCRD components, RCIS allows placing up to ~~21~~* 35 *control rods in "inoperable" bypass condition, only when the reactor mode switch is in REFUEL mode.*

The RCIS enforces rod movement blocks when the control rod has been placed in an inoperative bypass status. This is accomplished by the RCIS logic by not sending any rod movement pulses to the FMCRD.

In response to activation of special insertion functions, such as ARI, control rods in bypass condition do not receive movement ~~pulses~~ commands*.*

(10) Single/Dual Rod Sequence Restriction Override (S/DRSRO) Bypass

The RCIS single/dual rod sequence restriction override bypass feature allows the operator to perform special dual or single rod scram time surveillance testing at any power level of the reactor. In order to perform this test, it is often necessary to perform ~~single~~ rod movements that are not allowed normally by the sequence restrictions of the RCIS.

When ~~a control rod is placed in~~ a S/DRSRO bypass condition exists*, ~~that~~* the *control rod* positions are *~~is~~ no longer used in determining compliance to the RCIS sequence restrictions (e.g., the ganged withdrawal sequence and RRPS).*

The operator can only perform manual rod movements of control rods in the S/DRSRO bypass condition. The logic of the RCIS allows this manual single/dual rod withdrawal~~s~~ for special scram time surveillance testing.

The operator can place up to two control rods associated with the same hydraulic control unit (HCU) in the S/DRSRO bypass condition.

The dedicated RCIS operator interface panel contains status indication of ~~control rods in~~ a S/DRSRO bypass condition.

The RCIS ensures that S/DRSRO bypass logic conditions have no effect on special insertion functions for an ARI or SCRAM following condition and also no effect on other rod block functions, such as MRBM, APRM, or SRNM ~~period~~ rod blocks*.*

The drive insertion following a dual/single rod scram test occurs automatically. The operator makes the necessary adjustment of control rods in the system prior to the start of test for insertions, and restores the control rod to the desired positions after test completion.

(11) Single RCIS Channel Bypass Features

The RCIS is a dual channel system and the logic of the system provides a capability for the operator to invoke bypass conditions that affect only one channel of the RCIS. The interlock logic prevents the operator from placing both channels in bypass. Logic enforces bypass conditions to ensure that the capability to perform any special function (such as an ARI, scram following, and SCRRI) is not prevented.

The RCIS logic ensures that any special restrictions that are placed on the plant operation are enforced as specified in the applicable plant Technical Specifications for invoked bypass conditions.

The status and extent of the bypass functions are identified on the RCIS dedicated operator interface panel~~ and the PMCS CRT displays at the main control panel~~.

Bypass conditions allow continuation of normal rod movement capability by bypassing failed equipment in one RCIS channel. After repair or replacement of the failed equipment is completed, the operator can restore the system or subsystem to a full two-channel operability. The operator has the capability to invoke bypass conditions within the following system or subsystems:

(a) ~~*Synchro A or B position bypass*~~ Not Used

(b) Rod server processing ~~*module*~~ *channel A or B bypass*

(c) ~~*Inoperable condition bypass*~~ Not Used

(d) ~~*File control module channel A or B bypass*~~Not Used

(e) ATLM channel A or B bypass

(f) RWM channel A or B bypass

(g) ~~*RACS*~~ RAPI *channel A or B bypass*

(12) *Scram Time Test Data Recording*

*The logic of the RCIS provides the capability to automatically record individual FMCRD scram timing data based upon scram timing reed switches. When a FMCRD scram timing switch is activated, the time of actuation is recorded by the ~~RAPI System~~*scram time recording panel (STRP) *for time tagging of stored scram time test data in the ~~RSPC~~*scram time recording and analysis panel (STRAP) *for that particular FMCRD. The time-tagged data is stored in memory until the next actuation of that particular reed switch is detected again.*

The RCIS also time tags the receipt of a reactor scram condition being activated based upon the scram-following function input signals from the Reactor Protection System.

*The resolution of this time-tagging feature is less than 5 milliseconds. Contact bounce of the reed switch inputs are properly masked to support this function. The reference ~~real time~~ clock for time tagging is the ~~real time~~*RCIS *clock~~ of the RCIS~~.*

When the RCIS detects a reactor scram condition, the current positions of all control rods in the core are recorded, time tagged, and stored in memory. RCIS logic stores this data in memory until a request is received from the PCF for transfer of the stored scram timing performance data from the STRAP to the PCF. The transmitted data is used by the PCF to*~~PMCS. The transmitted data is used by the PMCS to calculate and~~ summarize scram time performance based on the scram timing data received from the RCIS.*

~~*In an alternate design, the scram time recording and analysis functions are performed by two separate panels called scram time test panel (STTP) and scram time test recording/analysis panel (STR/AP). The STTP function is to directly interface with FMCRD reed switches and gather all FMCRD status and scram information. The function of STR/AP is to receive FMCRD information from STTP, process and analyze FMCRD scram time data, generate scram time test reports, and communicate FMCRD reed switch based status data to other plant systems.*~~

(13) *ATLM Algorithm Description*

*The ATLM is a microprocessor based subsystem of the RCIS that executes two different algorithms for enforcing fuel operating thermal limits. One algorithm enforces operating limit minimum critical power ratio (OLMCPR), and the other the operating limit ~~minimum~~*maximum *linear heat generation rate (OLMLHGR). For the OLMCPR algorithm, the core is divided into 48 regions, each region consisting of 16 fuel bundles. For the OLMLHGR algorithm, each region is further vertically divided up into four segments. During a calculation cycle of ATL*M *(about 100 msec), rod block setpoints (RBS) are calculated for OLMCP*R *monitoring (48 values) and for OLMLHGR monitoring (48 x 4 values). Then the calculated setpoints are compared with*

the real time averaged LPRM readings for each region/segment. The ATLM issues a trip signal if any regionally averaged LPRM reading exceeds the calculated RBS. This trip signal causes a rod block within the RCIS and also a flow change block in the Recirculation Flow Control System (RFCS).

$RMCPR_i$ = *Regional initial MCPR (i.e., the minimum CPR of the 16 bundles in the region spanned by the four LPRM strings). Known input from predictor (~~process computer~~PCF).*

In Equations 7.7-1 and 7.7-2 above, "initial" refers to values that are downloaded from the "3D Predictor Monitor" subsystem of the ~~PMCS~~PCF. A download is requested by the ATLM whenever changes in reactor power and/or core flow exceed a preset limit. A download can also be manually requested by the operator.

7.7.1.2.2 System Interfaces

STD DEP T1 3.4-1

STD DEP 7.7-7

STD DEP Admin

(1) Control Rod Drive (CRD) System

The RCIS interfaces with the CRD System are as follows:

(e) Separation reed switches (A&B) through the ~~plant essential multiplexing system~~ RAPI signal interface units (SIUs) for each FMCRD

(2) Recirculation Flow Control System (RFCS)

(c) RFCS Core Flow Signal to RCIS

The RFCS provides signals to both channels of the RCIS that represent validated total core flow. These signals are used for part of the validity checks when performing an ATLM operating limit setpoint update. The RCIS obtains these signals from the RFCS via ~~the multiplexing system links~~ the nonsafety Plant Data Network (PDN) communication function and associated datalinks to the RCIS channels.

(e) RFCS Hard-Wired Signals to RCIS

~~Each of the three channels of RFCS provides the status of six relay contacts (12 wires per RFCS channel) to the RCIS. These signals are used by RCIS logic~~ RFCS also provides redundant control signals for implementation of the FMCRD emergency rod insertion functions to the RCIS emergency insertion control panel. These signals are activated when either the ARI or SCRRI condition exists to minimize the likelihood inadvertent FMCRD run-in.

(3) Feedwater Control System (FWCS)

The Feedwater Control System provides signals to both channels of the logic of the RCIS that represents validated total feedwater flow to the vessel and validated feedwater temperature. These signals are used as part of the validity checks when performing an ATLM operating limit setpoint update.

The RCIS can obtain these signals from the FWCS via ~~the multiplexing system communication links~~ the nonsafety PDN communication function and associated datalinks *to the RCIS channels.*

(4) Neutron Monitoring System

Whether or not some of the signals result in a rod block depends on reactor mode switch status which is provided to the RCIS from the reactor protection system ~~via the essential multiplexing system~~ using dedicated signal interfaces*.*

(5) Reactor Protection System

~~*The Essential Multiplexing System provides the above signals to the RCIS with complete isolation between the safety-related system and the non-safetyrelated system equipment.*~~

Divisions II and III of the RPS each provide the two channels of RCIS with two separate isolated signals that indicate a scram condition. The signals remain active until the scram condition is cleared by the operator. In addition, Divisions II and III of RPS each provide the RCIS emergency rod insertion panel *with hard-wired ~~relay contact status~~*scram follow signals *to minimize the likelihood of inadvertent FMCRD run-in.*

(6) ~~Performance Monitoring and Control System~~ Plant Computer Function (PCF)

*The ~~PMCS~~*PCF *provides the data update from the 3-D predictor function calculations associated with ATLM parameters based on actual measured values from the plant. This data is downloaded into the ATLM memory. This is to assure that rod blocks occur if the operating limits (e.g., MCPR and MLHGR) are approached. This feature allows the ATLM rod block setpoint calculation to be based on actual, measured plant conditions.*

*The RCIS provides the ~~PMCS~~*PCF *with control rod position information along with other RCIS status information for use in other ~~PMCS~~*PCF *functions and for the ~~PMCS CRT~~*PCF *displays related to the RCIS.*

The RCIS STRAP*~~gathers, time tags, stores, and~~ transmits scram timing data to the ~~PMCS~~*PCF*. The ~~PMCS~~*PCF *utilizes rod scram timing data to evaluate scram performance of the CRD System. The ~~PMCS~~*PCF *provides for the capability of printing or displaying of scram time logs. The scram time data sent to the ~~PMCS~~*PCF *provides the capability for comparing received data*

from the RCIS with the specification for control rod scram timing. Included in these comparisons are the averages and trends for data collected from past rod scrams or rod testing. The output for this function consists of, but is not limited to, the following type of data:

(a) Scram time measurements of any selected rod or group of rods to a particular position.

(b) A listing of INOPERABLE rods.

(c) Statistical analysis and average calculations of insertion times.

(d) List of rods which do not meet technical specification requirements.

~~*In the alternate design, scram time recording and analysis functions are performed by separate panels.*~~

7.7.1.2.3 Reactor Operator Information

STD DEP 7.7-18

(1) The RCIS provides for the activation of the following annunciation at the main control panel.

(a) Rod withdrawal block~~s~~.

(b) Rod Control & Information System trouble.

(c) ~~Low power transient zone (i.e., reactor power above but nearing the LPSP).~~ Rod insert block.

*(d) ~~Gang misalignment~~*Not Used*.*

*(e) ~~Selected control rod run-in (SCRRI)~~*Not Used*.*

*(f) ~~Alternate rod insertion initiated~~*Not Used*.*

(g) ~~CRD charging water header pressure low.~~ RWM trouble.

(h) Reference rod pull sequence (RRPS) violation.

(i) ATLM trouble.

(2) The RCIS provides status information indication on the RCIS dedicated operators interface on the main control panel as follows:

(a) Whether RCIS rod movement mode is automatic, semi-automatic *or manual*; whether “step”; “notch”, or “continuous” is selected; and whether “single rod” or “ganged rods” is selected*.*

(b) ~~Number of~~ *FMCRDs in* ~~*their*~~ normal *full-in position* (based upon synchro signals).

(c) ~~Number of~~ *FMCRDs in* full-in/*latched full-in position* (based upon position reed switch signals).

(d) ~~Number of~~ *FMCRDs in full-out position.*

(e) ~~*Average percent insertion*~~ Position *of all FMCRDs.*

(f) *Identification of selected gang (or selected single rod).*

(g) ~~*Average percent insertion*~~ Target position value *of selected gang (or selected single rod).*

(h) ~~Number of~~ *FMCRDs in an inoperable bypass condition.*

(i) *Existence of any rods withdrawal blocks.*

(j) *Existence of any single channel bypass of the* ~~*RACGS*~~ RAPI *and/or any subsystem within the* ~~*RACGS*~~ RCIS.

(k) *Whether reactor power is above the LPSP.*

(l) *Existence of RCIS trouble.*

(m) ~~*Activation of scram following function.*~~ Whether a control rod is at the over travel out position during the coupling check test.

(n) ~~*Activation of the ARI function.*~~ Whether a control rod is uncoupled during a coupling check test.

(o) ~~*Status of SCRRI function.*~~ Control rods with bypassed synchros.

(p) ~~*Successful completion of ATLM operating limit setpoint update.*~~ Gang misalignment.

(q) ~~*Any control rod in*~~ Existence of a *S/DRSRO bypass condition.*

(r) *Activation of a rod block by MRBM condition.*

(3) *The dedicated operators interface panel of the RCIS* ~~*provides logic and operator controls, so that the operator can*~~ and related RCIS displays, indications and associated controls provided on the main control room panel and on the RCIS cabinets and panels, allow the operator to *perform the following functions:*

(a) *Change the RCIS mode of operation from manual to semi-automatic or automatic rod movement modes*; select the “step”, “notch”, or

"continuous" movement mode; and select movement for "single rod" or "ganged rods".

(b) *Manually initiate the SCRRI function.*

(c) *Manually initiate the ~~two CRD test functions.~~* CRD Scram Test mode.

(d) *Request a bypass of ~~RACCS~~* RAPI *channel A or B (normal position: no bypass).*

(e) *Request a bypass of ATLM or RWM channel A or B. (Normal positions are not bypassed.)*

(f) *Request an ATLM operating limit setpoint update be performed.*

(g) *Perform a reset of any RCIS* abnormal condition.

(h) *Manually initiate CRD brake test, CRD coupling check and CRD ~~step~~* double notch *test functions.*

(i) Perform withdraw or insert operation.

NOTE: *Interlock logic may prevent certain combinations of bypasses from being activated even though the above bypass controls have been activated.*

(4) *~~The CRT displays, which are part of the PMCS, provide information to the operator on demand.~~* Main control room panel equipment other than the RCIS dedicated operator interface provides for display of the following RCIS related information for the operator.

~~The following status and controls are available through the CRTs:~~

(a) *RCIS rod movement status (automatic/semi-automatic/manual).*

(b) *Position of all rods, based on synchro signals.*

(c) *Selected gang (or selected single rod).~~ plus the four LPRM readings of the closest LPRM strings to the selected gang or selected single rod. If the closest LPRM reading at a given level is inoperable, as determined by the Neutron Monitoring System LPRM status information, an INOP status is displayed instead of actual LPRM reading~~*

~~Identification of: (d through v)~~

(d) *~~All rods in rod~~* Rod *withdrawal block condition.*

(e) *~~BYPASSED or INOPERABLE control rods.~~* Control rods that have been placed in the INOPERABLE bypass condition.

(f) *~~Control rods with bypassed synchros.~~* Scram following function status.

(g) *Control rods that separation has been detected.*

(h) *Control rods full-in status.*

(i) *Control rods in* full-in/*latched full-in* position *status* (based upon position reed switch signals).

(j) ~~*Control rods in overtravel out status.*~~ ARI function status.

(k) *Control rods full-out status.*

(l) ~~*Control rods in overtravel out status.*~~ SCRRI function status.

(m) ~~*Control rods for which uncoupled condition has been detected.*~~ ATLM operating limit setpoint update status.

(n) ~~*Control rods for which drift condition has been detected*~~Not Used.

(o) *Control rods for which abnormal* ~~*movement (other than drift)*~~ condition *has been detected.*

(p) ~~*Control rods that are SCRRI selected control rods.*~~The applicable SCRRI Target Position Value for each FMCRD.

(q) ~~*Control rods that can be inserted.*~~ Not Used

(r) ~~*Control rods that can be withdrawn.*~~ Not Used

(s) ~~*All RCIS bypasses in effect*~~Not Used.

(t) *All detected conditions that have resulted in an RCIS trouble alarm being activated, when applicable.*

~~*(u) All detected conditions that have resulted in rod withdrawal block conditions being active, when applicable.*~~

~~*(v) Obtain ATLM operating limit setpoint update, when requested.*~~

7.7.1.3 Recirculation Flow Control System—Instrumentation and Controls

STD DEP T1 3.4-1

STD DEP 7.7-20

STD DEP 8.3-1

STD DEP 9.5-3

STD DEP Admin

(1) Identification

The RFC System consists of three redundant process controllers, adjustable speed drives (ASDs), switches, sensors, and alarm devices provided for operational manipulation of the ten reactor internal pumps (RIPs) and the surveillance of associated equipment. Recirculation flow control is achieved either by manual operation or by automatic operation ~~if the power level is above 70% of rated~~. The reactor internal pumps can be driven to operate anywhere between 30% to 100% of rated speed with the variable voltage, variable frequency power source supplied by the ASDs. 30% rated speed corresponds to the minimum operating speed to be used during initial pump startups. The instrument electrical diagram (IED) is provided in Figure 7.7-5 and the interlock block diagram (IBD) is provided in Figure 7.7-7.

(3) Power Sources

(a) Normal

Each processing channel of the triply redundant digital processor receives its respective power input from an uninterruptible, independent source of the instrument and control power supply system. Other system equipments such as the ~~transmitters,~~ input conditioners, voters, output device drivers, control room displays, etc., will also derive their required power sources from the same redundant uninterruptible power supply system.

(4) Normal Operation

Reactor recirculation flow is varied by modulating the recirculation internal pump speeds through the voltage and frequency modulation of the adjustable speed drive output. By properly controlling the operating speed of the RIPs, the recirculation system can automatically change the reactor power level.

Control of core flow is such that, at various control rod patterns, different power level changes can be automatically accommodated. For a rod pattern where rated power accompanies 100% flow, power can be reduced to 70% of full power by full automatic or manual flow variation. At other rod patterns, automatic or manual power control is possible over a range of approximately 30% from the maximum operating power level for that rod pattern. Below ~~70% power level, only manual control of power (i.e., by means of manual flow setpoint control) is available~~ approximately 25% reactor power the speed of all RIPs is normally maintained at the normal minimum operating speed (in either manual or automatic speed control mode).

An increase in recirculation flow temporarily reduces the void content of the moderator by increasing the flow of coolant through the core. The additional neutron moderation increases reactivity of the core, which causes reactor power level to increase. The increased steam generation rate increases the steam volume in the core with a consequent negative reactivity effect, and a

new (higher) steady-state power level is established. When recirculation flow is reduced, the power level is reduced in the reverse manner. The RFC System, the Automatic Power Regulator System (APR), the Steam Bypass and Pressure Control System (SB&PC) and the main Turbine Electro-Hydraulic Control System (EHC) ~~*operating in conjunction with the main turbine pressure regulator control, provides*~~ provide for *fully automatic load following* operation*.*

The RFC System is designed to allow both automatic and manual operation. In the automatic mode, either total automatic or ~~*semi-automatic operation*~~ core flow mode *is possible. Fully automatic, called "Master Auto" mode, refers to the automatic load following (ALF) operation in which the master controller receives a load demand error signal from the* ~~*main turbine pressure regulator*~~ APR*. The load demand error signal is then applied to a cascade of lead/lag and proportional-integral (PI) dynamic elements in the master controller to generate a flow demand signal for balancing out the load demand error to zero. The flow demand signal is forwarded to the flow controller for comparing with the sensed core flow. The resulting flow demand error is used to generate a suitable gang speed demand to the ASDs. The speed demand to the individual ASDs causes adjustment of RIP motor power input, which changes the operating speed of the RIP and, hence, core flow and core power. This process continues until both the errors existing at the input of the flow controller and master controller are driven to zero. Fully automatic control is provided by the master controller when in the automatic mode. The flow controller can remain in automatic even though the master controller is in manual.*

The reactor power change resulting from the change in recirculation flow causes the pressure regulator to reposition the turbine control valves. If the original demand signal was a load/speed error signal, the turbine responds to the change in reactor power level by adjusting the control valves, and hence its power output, until the load/speed error signal is reduced to zero.

In the ~~*semi-automatic*~~ core flow *mode, the operator sets the total core flow demand and the RFC System responds to maintain a constant core flow. Core flow control is achieved by comparing the core flow feedback, which is calculated from the core plate differential pressure signals, with the operator-supplied core flow setpoint.*

(7) Recirculation Pump Trip (RPT)

In the event of either (a) turbine trip or generator load rejection when reactor power is above a predetermined level (EOC RPT), (b) reactor pressure exceeds the high dome pressure trip setpoint, or (c) reactor water level drops below the Level 3 setpoint, the RPT logic will automatically trip off a group of four RIPs. The group of the RIPs being tripped is the same group which derives its power source directly from the ~~*6.9*~~ 13.8 *kV buses (i.e., the group not having the M-G set interface).*

The three inputs required to determine the preceding three RPT conditions are provided by the Reactor Protection System, the Feedwater Control System, and the Steam Bypass and Pressure Control System. These inputs consist of three sets of discrete signals for each of the end-of-cycle (EOC), high pressure and low level (Level 3) trip conditions. Each set represents the status of four channel outputs. A two-out-of-four logic is used by the RFC System to confirm the validity of the EOC trip condition. Two-out-of-three logic is used for the high pressure and Level 3 trip conditions. Any one of the three trip conditions can initiate a RPT. All switching logics are performed by the triplicate RFC controller. RPT is implemented by tripping the ~~gate-turn-off (GTO)~~ inverters in the adjustable speed drives.

(8) ~~*Equipments*~~ Equipment

(c) Adjustable Speed Drives (ASDs)

Each ASD consists of (1) an AC-to-DC rectifier ~~section~~ circuitry; (2) a solid state, variable frequency DC-to-AC inverter ~~section~~ circuitry, which ~~includes gate-turn-off thyristers~~ provides the required circuitry for implementation of the RPT function; (3) a control and regulation section; and (4) measurement and protection circuits.

(d) Fault-Tolerant Digital Controller

The FTDC performs many functions. It reads and validates inputs off the ~~Non-Essential Multiplexing System (NEMS)~~ PDN interface once every sampling period. It performs the specific recirculation flow control calculations and processes the pertinent alarm and interlock functions, then updates all RFC System outputs to the ~~NEMS~~ PDN. To prevent computational divergence among the three processing channels, each channel performs a comparison check of its calculated results with the other two redundant channels.

The internal FTDC architecture features three ~~multiplexing (MUX)~~ redundant interfacing units for communication between the ~~NEMS~~ PDN and the FTDC processing channels, and fiber optic communication links for interprocessor and channel communication, and for communication with the technician interface unit (TIU).

(e) Recirculation Flow Control System Algorithms

A function generator converts the speed demand output to frequency demand for the ASDs. A rate limiter on the output of the function generator limits the rate of change in speed demand to ~~1.5~~ +5%/s for increasing speed changes and ~~5~~ -5%/s for decreasing speed changes during normal operation. This prevents rapid changes in pump speed as a result of multiple processing channel failure.

In the ALF mode, the master controller receives a load demand error *signal from the ~~Steam Bypass and Pressure Control (SB&PC)~~* APR *System in response to any combination of local operator load setpoint inputs, automatic generation control inputs, or grid load changes indicated by grid frequency variation.*

(h) Core Flow Measurement Systems

*The PDdP measurement system consists of four differential pressure transmitters measuring the pump deck differential pressures common to all RIPs, and one set of redundant pump speed sensors unique for each RIP. Pump flows are calculated by the ~~process computer~~*PCF *based on information from the measured ~~delta Ps~~*differential pressures*, pump speed, and the vendorsupplied pump head curves. Total core flow is the sum of the individual pump flows. The PDdP core flow signal is used as a calibration source for CPdP core flow and as an input to the MCPR calculations.*

(11) Operational Considerations

The FTDC, which commands RIP speed changes, is located in the main control room. Provisions are made to allow either automatic or manual operation for each control loop (master, flow and speed). All transfers between the manual and automatic operations are designed to be bumpless. RFCS control modes, as well as setpoint changes, can be initiated by either the operator or by the ~~PMCS~~ APR*, depending on whether the "local" or the "auto" system control has been selected.*

When in local control, the operator's control~~,~~ panel provides the operator the capability to select the operating mode of the system and to initiate certain manual actions, and to increment/decrement switches which adjust setpoints at a preset rate of change.

(12) Reactor Operator Information

Control room indications include both dedicated displays and on-demand displays~~ from the Process Monitoring and Control System~~. These indications include the digital recirculation flow controller process variables, the recirculation pump speed and POWER SUPPLY operating status, and the core flow measurement system outputs. Also, indicating lights are provided to indicate the control system configuration and the trip function status.

7.7.1.4 Feedwater Control System—Instrumentation and Controls

STD DEP T1 3.4-1

(5) Reactor Vessel Water Level Measurement

Reactor vessel narrow range water level is measured by three identical, independent sensing systems which are a part of the Nuclear Boiler System

(NBS). For each level measurement channel, a differential pressure transmitter senses the difference between the pressure caused by a constant reference column of water and the pressure caused by the variable height of water in the reactor vessel. The differential pressure transmitter is installed on lines which are part of the Nuclear Boiler System (Subsection 7.7.1.1). The FWCS FTDCs will determine one validated narrow range level signal using the three level measurements, received from NBS ~~via the Non-Essential Multiplexing System (NEMS),~~ as inputs to a signal validation algorithm. The validated narrow range water level is indicated on the main control panel and continuously recorded in the main control room.

(6) Steam Flow Measurement

The steam flow in each of four main steamlines is sensed at the reactor pressure vessel nozzle venturis. Two transmitters per steamline sense the venturi differential pressure and send these signals to the FTDCs ~~via the NEMS~~. The ~~NEMS~~ signal conditioning algorithms take the square root of the venturi differential pressures and provide steam flow rate signals ~~to the FTDCs~~ for validation into one steam flow measurement per line. These validated measurements are summed in the FTDCs to give the total steam flow rate out of the vessel. The total steam flow rate is indicated on the main control panel and recorded in the main control room.

(7) Feedwater Flow Measurement

Feedwater flow is sensed at a single flow element in each of the two feedwater lines. Two transmitters per feedwater line sense the differential pressure and send these signals to the FTDCs ~~via the NEMS~~. The ~~NEMS~~ signal conditioning algorithms take the square root of the differential pressure and provide feedwater flow rate signals to the FTDCs for validation into one feedwater flow measurement per line. These validated measurements are summed in the FTDCs to give the total feedwater flow rate into the vessel. The total feedwater flow rate is indicated on the main control panel and recorded in the main control room.

Feedpump suction flow is sensed at a single flow element upstream of each feedpump. The suction line flow element differential pressure is sensed by a single transmitter and sent to the FTDCs ~~via the NEMS~~. The ~~NEMS~~ signal conditioning algorithms take the square root of the differential pressure and provide the suction flow rate measurements to the FTDCs. The feedpump suction flow rate is compared to the demand flow for that pump, and the resulting error is used to adjust the actuator in the direction necessary to reduce that error. Feedpump speed change via adjustable speed drives and low flow control valve position control are the flow adjustment techniques involved.

(8) Feedwater/Level Control

Each FTDC will execute the control software for all three of the control modes. Actuator demands from the triply redundant FTDCs will be sent ~~over the NEMS~~ to field voters which will determine a single demand to be sent to each actuator. Each feedpump speed or control valve demand may be controlled either automatically by the control algorithms in the FTDCs or else manually from the main control panel through the FTDCs.

(9) Interlocks

The level control system also provides interlocks and control functions to other systems. When the reactor water level reaches the Level 8 trip setpoint, the FWCS simultaneously annunciates a control room alarm, sends a trip signal to the Turbine Control System to trip the turbine generator, and sends trip signals to the Condensate, Feedwater and Condensate Air Extraction (CF&CAE) System to trip all feed pumps and to close the main feedwater discharge valves and feedpump bypass valves. This interlock is enacted to protect the turbine from damage from high moisture content in the steam caused by excessive carryover while preventing water level from rising any higher. This interlock also prevents overpressurization of the vessel by isolating the condensate pumps from the vessel and it is implemented by an independent FTDC from the FTDC that performs level control function*.*

(10) Feedwater Flow Control

Feedwater flow is delivered to the reactor vessel through ~~a combination of three~~ adjustable speed motor-driven feedpumps which are arranged in parallel. During planned operation, the feedpump speed demand signal from the FTDCs is sent to a field voter which sends a single demand signal to the feed pump speed control systems. Each adjustable speed drive can also be controlled by its manual/automatic transfer station which is part of the Feedwater and Condensate System. A low flow control valve (LFCV) is also provided in parallel to a common discharge line from the feedpumps. During low flow operation, the LFCV demand signal from the FTDCs are sent to a field voter which sends a single demand signal to the LFCV control system. The LFCV can also be controlled by the manual/automatic transfer station which is part of the feedwater and condensate system.

7.7.1.5 ~~*Process Computer System (PCS)*~~ Plant Computer Function (PCF) —Instrumentation and Controls

STD DEP T1 3.4-1

STD DEP 7.7-22

STD DEP Admin

(1) System Identification

The Plant Computer Functions (PCF) are a set of control, monitoring, and data calculation functions that are implemented on digital central processing units and associated peripheral equipment provided by the Plant Information and Control System (PICS). Redundant processors are used for functions that are important to plant operations. The PCF are classified as nonsafety-related.

The PCF perform local power range monitor (LPRM) calibrations and calculations of fuel operating thermal limits data, which is provided to the automated thermal limit monitor (ATLM) function of the Rod Control and Information System (RCIS) for the purpose of updating rod block setpoints.

The PCF also include top-level controller functions which monitor the overall plant conditions, issue supervisory commands, and adjust setpoints of lower level controllers to support automation of normal plant startup, shutdown, and power range operations. In the event that abnormal conditions develop in the plant during operations in the automatic mode, these functions automatically revert to the manual mode of operation.

The ~~PCS~~ PCF includes two subsystems, the Performance Monitoring and Control Subsystem (PMCS) and the Power Generation Control Subsystem (PGCS). Between them, the two subsystems perform the process monitoring and control and the calculations that are necessary for the effective evaluation of normal and emergency power plant operation. The ~~PCS~~ PCF is designed for high reliability utilizing redundant, network combined processing equipment which is capable of processing data, servicing subsystems, providing supervisory control over digital control systems and presenting data to the user.

The purpose of the ~~PCS~~ PCF is to increase the efficiency of plant performance by:

(a) performing the functions and calculations defined as being necessary for the effective evaluation of nuclear power plant operation;

(c) ~~P~~providing a permanent record and historical perspective for plant operating activities and abnormal events via the historian function;

(e) providing capability to monitor plant performance through presentation of video displays in the main control room and elsewhere throughout the plant; ~~providing the ability to directly control certain non-safety-related plant equipment through on-screen technology;~~ and

The calculations performed by the ~~process plant computer~~PCF include process validation and conversion, combination of points, nuclear system supply performance calculations, and balance-of-plant performance calculations.

(2) Classification

The ~~Process Computer System (PCS)~~ Plant Computer Function (PCF) *is classified as ~~a non-safety-related~~* nonsafety-related *~~system~~ and has no safety-related design basis. However, it is designed so that the functional capabilities of safety-related systems are not affected by it.*

(3) Power Sources

The power for the ~~PCS~~ PCF *is supplied from two vital ac power supplies. These are redundant, uninterruptible non-Class 1E 120 Vac power supplies. No single power failure will cause the loss of any ~~PCS~~* PCF *function.*

(4) Equipment

The ~~PCS~~ PCF *is composed of the following features and components:*

(a) The central processing units, which perform various calculations, make necessary interpretations and provide for general input/output device control between I/O devices and memory.

(5) Testability

The ~~PCS~~ PCF *has self-checking provisions. It performs diagnostic checks to determine the operability of certain portions of the system hardware and performs internal programming checks to verify that input signals and selected program computations are either within specific limits or within reasonable bounds.*

(7) NSS Performance Calculation Programs

The NSS programs provide the reactor core performance information. The functions performed are as follows:

(c) ~~After~~ When an ATLM setpoint update is requested and after *calculating the power distribution within the core, the computer* sends data to the ATLM of the RCIS on the calculated fuel thermal operating limits and corresponding initial LPRM values. The ATLM monitors LPRM, APRM, control rod position, and other plant readings (refer to 7.7.1.2.1 Control Rod Drive Control System Interfaces) and issues rod block signals to prevent violation of the fuel thermal operating limits. *~~uses appropriate reactor operating limit criteria to establish alarm trip settings (ATS) for each LPRM channel. These settings are expressed as maximum acceptable LPRM values to which the actual scanned LPRM readings are compared. The scanned LPRM, when exceeding the ATS, will sound an alarm and thereby assist the operator to maintain core operation within permissible thermal limits established by the prescribed maximum fuel rod power density and minimum critical power ratio criteria.~~ LPRM calibration constants are periodically calculated.*

(e) *Each LPRM reading is scanned at an appropriate rate and, together with* data from PCF downloaded to the ATLM, ~~*appropriate computational methods, provides nearly*~~ the ATLM provides nearly *continuous reevaluation of core thermal limits* ~~*with subsequent modification to the LPRM ATS*~~ *based on the new reactor operating level. The range of surveillance and the rapidity with which the computer responds to the reactor changes permit more rapid power maneuvering with the assurance that thermal operating limits will not be exceeded.*

7.7.1.5.1 Performance Monitoring and Control Subsystem

STD DEP 7.7-22

STD DEP 7.7-23

STD DEP Admin

NSS Performance Module *— The NSS performance module provides the reactor core performance information. The calculations performed are as follows:*

- ~~*After*~~ When an Automatic Thermal Limit Monitor (ATLM) setpoint update is requested and after *calculating the power distribution within the core, the computer* sends data to the ATLM of the RCIS on the calculated fuel thermal operating limits and corresponding initial LPRM values. The ATLM monitors LPRM, APRM, control rod position, and other plant readings (see 7.7.1.2.1 Control Rod Drive Control System Interfaces) and issues rod block signals to prevent violation of the fuel thermal operating limits. ~~*uses appropriate reactor operating limit criteria to establish alarm trip settings for each LPRM channel. These settings are expressed as maximum acceptable LPRM values to which the actual scanned LPRM readings are compared. The scanned LPRM, when exceeding the alarm trip settings, will sound an alarm and thereby assist the operator to maintain core operation within permissible thermal limits established by the prescribed maximum fuel rod power density and minimum critical power ratio criteria.*~~ *LPRM calibration constants are periodically calculated.*

- *Each LPRM is scanned at an appropriate rate and, together with* the ATLM function, ~~*appropriate computational methods,*~~ *provides nearly continuous reevaluation of core thermal* operating *limits* ~~*with subsequent modification to the LPRM alarm trip settings*~~ *based on the new reactor operating level. The range of surveillance and the rapidity with which the computer responds to the reactor changes permit more rapid power maneuvering with the assurance that thermal operating limits will not be exceeded.*

- *Flux level and position data from the automatic* ~~*fixed in-core probe (AFIP)*~~ traversing incore probe (ATIP) *equipment are read into the computer. The computer evaluates the data and determines gain adjustment factors by which the LPRM amplifier gains can be altered to compensate for exposure-induced sensitivity loss. The LPRM amplifier gains are not to be physically altered except*

immediately prior to a whole core calibration using the ~~AFIP~~ ATIP system. The gain adjustment factor computations help to indicate to the operator when such a calibration procedure is necessary.

Point Log and Alarm Module

Analog Variable Alarms*—The processor is capable of checking each analog input variable against two types of limits for alarming purposes:*

The alarming sequence consists of an audible alarm, a console alarm, and a descriptive message for the variables that exceed process alarm limits. The processor provides the capability to alarm on the main control room annunciator system in the event of abnormal ~~PCS~~ PCF operation.

7.7.1.5.2 Power Generation Control Subsystem

STD DEP T1 3.4-1

The Power Generation Control Subsystem (PGCS) is a top level controller that monitors the overall plant conditions, issues control commands to ~~non-safety related~~ nonsafety-related systems, and adjusts setpoints of lower level controllers to support automation of the normal plant startup, shutdown, and power range operations. The PGCS is a separate function of the ~~Process Computer System~~ Plant Computer Function. The PGCS contains the algorithms for the automated control sequences associated with plant startup, shutdown and normal power range operation. The PGCS issues reactor command signals to the automatic power regulator (APR). The reactor power change algorithms are implemented in the APR.

In the automatic mode, the PGCS issues command signals to the ~~turbine master controller~~APR which contains appropriate algorithms for automated sequences of turbine, feedwater, and related auxiliary systems. Command signals for setpoint adjustment of lower level controllers and for startup/shutdown of other systems required for plant operation are executed by the PGCS. The operator interfaces with the PGCS through a series of breakpoint controls to initiate automated sequences from the operator control console. For selected operations that are not automated, the PGCS prompts the operator to perform such operations. In the semi automatic mode, the PGCS provides guidance messages to the operator to carry out the startup, shutdown, and power range operations.

The PGCS interfaces with the operator's console to perform its designated functions. The operator's control console for PGCS consists of a series of breakpoint controls for a prescribed plant operation sequence. When all the prerequisites are satisfied for a prescribed breakpoint in a control sequence, a permissive is given and, upon verification by the operator, the operator initiates the prescribed sequence. The PGCS then initiates demand signals to the ~~various system controllers~~APR to carry out the predefined control functions. (NOTE: For non-automated operations that are required during normal startup or shutdown (e.g., change of reactor mode switch status), automatic prompts are provided to the operator. Automated operations continue after the operator completes the prompted action manually.)

7.7.1.5.3 Safety Evaluation

STD DEP T1 3.4-1

The ~~Process Computer System~~ Plant Computer Function *is designed to provide the operator with certain categories of information and to supplement procedure requirements for control rod manipulation during reactor startup and shutdown. The system augments existing information from other systems such that the operator can start up, operate at power and shut down in an efficient manner. The PGCS function provides signals to the APR as explained in Subsection 7.7.1.5.2. However, this is a power generation function. Neither the ~~Process Computer System~~* Plant Computer Function *nor its PGCS function initiate or control any engineered safeguard or safety-related system.*

7.7.1.5.4 Testing and Inspection Requirements

STD DEP T1 3.4-1

The ~~Process Computer System~~ Plant Computer Function *has self-checking provisions. It performs diagnostic checks to determine the operability of certain portions of the system hardware and performs internal programming checks to verify that input signals and selected program computations are either within specific limits or within reasonable bounds.*

7.7.1.5.5 Instrumentation Requirements

STD DEP T1 3.4-1

There is no instrumentation in the ~~Process Computer System~~ Plant Computer Function *other than the video display units (VDUs). Control of the ~~Process Computer System~~* Plant Computer Function *is accomplished with on- screen methods and a few hard switches. System auxiliaries such as printers* and, *plotters~~, and tape handlers~~ have their own local controls.*

7.7.1.6 Neutron Monitoring System— Nonsafety-Related Subsystems

7.7.1.6.1 Automatic Traversing Incore Probe (ATIP)

STD DEP T1 3.4-1

STD DEP 7.7-23

STD DEP Admin

(1) Description

The ATIP is comprised of three TIP machines, each with a neutron-sensitive sensor attached to the machine's flexible cable. Other than the sensor itself, each machine has a drive mechanism, a 20-position index mechanism, associated guide tube, and other parts. While not in use, the sensor is normally stored and shielded in a storage area inside the TIP room in the

reactor building. During manual or automatic *operation, the ATIP sensors are inserted~~, either manually or automatically,~~ via guide tubing and through desired index positions to the designated LPRM assembly calibration tube. Each ATIP machine has designated number and locations of LPRM assemblies to cover, such that the ATIP sensor can travel to all LPRM locations assigned to this machine via the index mechanism of this machine. The LPRM assignments to the three machines are shown in Figure 7.7-10.*

*Flux readings along the axial length of the core are obtained by first inserting the sensor fully to the top of the calibration tube and then taking data as the sensor is withdrawn continuously from the top. Sensor flux reading, sensor axial positions data in the core, and LPRM location data are all sent to an ATIP control unit located in the control room, where the data can be stored. The data are then sent to the ~~process computer~~*PCF *for calibration and performance calculations. The whole ATIP scanning sequence and instructions are fully automated, with manual control available.*

*The index mechanism allows the use of a single sensor in any one of twenty different LPRM assemblies. ~~There is a common LPRM location that allows all three ATIP scanning. This is for ATIP cross-machine calibration.~~*One common LPRM location exists that all three ATIP machines can scan for cross-machine calibration.

(2) Classification

The ATIP is ~~non-safety related~~ nonsafety-related, but contains components that have been designated as safety-related *as shown in Table 3.2-1. The subsystem is an operational system and has no safety function.*

(4) Testability

The ATIP equipment is tested and calibrated using ~~heat balance data and~~ procedures described in the instruction manual.

7.7.1.6.2 Multi-Channel Rod Block Monitor (MRBM)

STD DEP T1 3.4-1

(1) System Identification

The MRBM ~~microcomputer-based~~ logic receives input signals from the local power range monitors (LPRMs) and the average power range monitors (APRMs) of the NMS. It also receives core flow data from the NMS, and control rod status data from the rod action and position information subsystem of the RCIS to determine when rod withdrawal blocks are required. The MRBM averages the LPRM signals to detect local power change during the rod withdrawal. If the averaged LPRM signal exceeds a preset rod block setpoint, a control rod block demand will be issued. The MRBM monitors many 4-by-4 fuel bundle regions in the core in which control

rods are being withdrawn as a gang. Since it monitors more than one region, it is called the multi-channel rod block monitor. The rod block setpoint is a core-flow biased variable setpoint. The MRBM is a dual channel system not classified as a safety system.

(4) Testability

The MRBM is a dual channel, independent subsystem of the NMS. One of theMRBM channels can be bypassed for testing or maintenance without affectingthe overall MRBM function. Self-test features are employed to monitor failuresin the ~~microprocessor~~ system. Test capabilities allow for calibration and tripoutput testing.

7.7.1.7 Automatic Power Regulator System—Instrumentation and Controls

STD DEP T1 3.4-1

STD DEP Admin

(1) Identification

The primary objective of the Automatic Power Regulator (APR) System is to control reactor power during reactor startup, power generation, and reactor shutdown, by appropriate commands to change rod positions, or to change reactor recirculation flow. The secondary objective of the APR System is to control the pressure regulator setpoint (or turbine bypass valve position) during reactor heatup and depressurization (e.g., to control the reactor cooldown rate). The APR System consists of redundant process controllers. Automatic power regulation is achieved by appropriate control algorithms for different phases of the reactor operation which include approach to criticality, heatup, reactor power increase, automatic load following, reactor power decrease, and reactor depressurization and cooldown. The APR System receives input from the ~~plant computer~~PCF, the Power Generation Control System (Subsection 7.7.1.5.~~1~~2), the Steam Bypass and Pressure Control System (Subsection 7.7.1.8), and the operator's control console. The output demand signals from the APR System are to the RCIS to position the control rods, to the RFC System to change reactor coolant recirculation flow, and to the SB&PC System for automatic load following operations. The ~~PGS~~PGCS performs the overall plant startup, power operation, and shutdown functions. The APR System performs only those functions associated with reactor power changes and with pressure regulator setpoint (or turbine bypass valve position) changes during reactor heatup or depressurization. A simplified functional block diagram of the APR System is provided in Figure 7.7-11.

(4) Normal Operation

The APR System interfaces with the operator's console to perform its designed functions. The operator's control panel for automatic plant startup, power operation, and shutdown functions is part of the PGCS. This control

panel consists of a series of breakpoint controls for a prescribed plant operation sequence. When all the prerequisites are satisfied for a prescribed breakpoint in a control sequence, a permissive is given and, upon verification by the operator, the operator initiates the prescribed control sequence. The ~~PGCS~~APR then initiates demand signals to various system controllers to carry out the predefined control functions. [Note: For non-automated operations that are required during normal startup or shutdown (e.g., change of Reactor Mode Switch status), automatic prompts are provided to the operator. Automated operations continue after the operator completes the prompted action manually.] The functions associated with reactor power control are performed by the APR System.

For reactor power control, the APR System contains algorithms that can change reactor power by control rod motions, or by reactor coolant recirculation flow changes, but not both at the same time. A prescribed control rod sequence is followed when manipulating control rods for reactor criticality, heatup, power changes, and automatic load following. Each of these functions has its own algorithm to achieve its designed objective. The control rod sequence can be updated from the ~~process computer~~PCF based on inputs from the reactor engineer. A predefined trajectory of power-flow is followed when controlling reactor power. The potentially unstable region of the power- flow map is avoided during plant startup, automatic load following, and shutdown. During automatic load following operation, the APR System interfaces with the SB&PC System to coordinate main turbine and reactor power changes for optimal performance.

(6) Equipment

The APR System control functional logic is performed by redundant, microprocessor-based fault-tolerant digital controllers (FTDC). The FTDC performs many functions. It reads and validates inputs from the ~~Non-Essential Multiplexing System (NEMS)~~ Plant Data Network (PDN) interface once every sampling period. It performs the specific power control calculations and processes the pertinent alarm and interlock functions, then updates all system outputs to the ~~NEMS~~PDN. To prevent computational divergence among the redundant processing channels, each channel performs a comparison check of its calculated results with the other redundant channels. The internal FTDC architecture features redundant ~~multiplexing~~ interfacing units for communications between the ~~NEMS~~ PDN and the FTDC processing channels~~.~~.

(9) Operator Information and Operational Considerations

During operation of the APR System, the operator observes the performance of the plant via ~~CRTs~~ VDUs on the main console or on large screen displays in the main control room. The APR System can be switched into the manual mode by the operator, and a control sequence, which is in progress, can be stopped by the operator at any time. This will stop automatic reactor power

changes. If any system or component conditions are abnormal during execution of the prescribed sequences, continued operation is stopped automatically and alarms will be activated to alert the operator. With the APR System in manual mode, the operator can manipulate control rods and recirculation flow through the normal controls. A failure of the APR System will not prevent manual controls of reactor power, nor will it prevent safe shutdown of the reactor.

7.7.1.8 Steam Bypass & Pressure Control System—Instrumentation and Controls

STD DEP T1 3.4-1

STD DEP 7.7-24

STD DEP Admin

(5) Abnormal Plant Operation

The SB&PC System is also designed for operation with other reactor control systems to avoid reactor trip after significant plant disturbances. Examples of such disturbances are loss of one feedwater pump, loss of three recirculation pumps, inadvertent opening of one *safety/relief* ~~*valves*~~ valve *or* two *steam bypass valves, main turbine stop/control valve surveillance testing, and MSIV testing.*

(7) I&C Interface

The external signal interfaces for the SB&PC System are as follows:

(a) ~~*Narrow range dome pressure signals*~~ Validated dome pressure signal *from the SB&PC System to the Recirculation Flow Control System.*

(e) Output signals from the SB&PC System to the performance monitoring and control function of the ~~*process computer*~~PCF*.*

(h) Bypass valve position, ~~*servo current, position error*~~ *and valve open and closed signals from the Turbine Bypass System.*

(i) Emergency bypass valve fast opening signals and ~~*bypass valve flow demand signals*~~, servo current, *from the SB&PC System to the Turbine Bypass System.*

(l) ~~*Governor free demand signal to the reactor power compensator in the APR system.*~~ Automatic Frequency Control signal sent from the APR system to the SB&PC system.

(m) ~~*Reactor power compensation signal in accordance with speed error from the SB&PC System to the APR System.*~~ SB&PC system sends limited speed regulator output to the reactor power compensator in the APR system.

(o) Pressure regulator output signal is sent in accordance with speed error from the SB&PC system to the APR system.

(10) Operator Information

During operation of the SB&PC System, the operator may observe the performance of the plant via ~~CRTs~~ VDUs on the main control console or on large screen displays in the main control room. As described in (8) above, the self-test provision assures that all transducer/controller failures are indicated to the operator and maintenance personnel. The triplicated logic facilitates online repair of the controller circuit boards.

7.7.1.9 ~~*Non-Essential Multiplexing System*~~ Plant Data Network

STD DEP Admin

The discussion of the Plant Data Network has been relocated to Subsection 7.9S.

~~*The Non-Essential Multiplexing System(NEMS) is separate and distinct from the Essential Multiplexing System (EMS), though both are similar in design and architecture. Except for system interfaces and quality assurance requirements unique to Class 1E systems, specific design attributes discussed in Section 7A.2 pertain to the NEMS as well. Both systems are fully described in their subsection design specifications available from the Master Parts List referenced in Subsection 1.1.3. This subsection describes those features which are unique to the NEMS.*~~

~~*(1) System Description*~~

~~*The NEMS provides distributed control and instrumentation data communication networks to support the monitoring and control of interfacing plant power generation (non-safety-related) systems. [The EMS performs the same function for the protection (safety-related) systems.] The NEMS provides all the electrical devices and circuitry (such as multiplexing units, data transmission line and transmission controllers), between sensors, display devices, controllers and actuators, which are defined by other plant systems. The NEMS also includes the associated data acquisition and communication software required to support its function of transmitting plant wide data for distributed control and monitoring.*~~

~~*The NEMS acquires both analog and digital signals from remote process sensors and discrete monitors located within a plant, and multiplexes the signals to a central control room to drive annunciators, monitors and recorders, and to send signals, and output control signals are multiplexed to actuators, valves, motor drives and other control equipment in the plant associated with non-safety-related systems.*~~

~~*Consistent with fault-tolerant (triplicated) digital control systems utilized in feedwater control, reactor recirculation flow control and steam bypass and*~~

~~pressure regulation, the NEMS is also triplicated for these systems interfaces, as appropriate, each with its own independent control.~~

~~The remaining communication functions of the NEMS provides the following system functions:~~

~~(a) Acquires non-safety-related data (e.g., sensed input and equipment status signals) throughout the plant.~~

~~(b) Conditions, formats and transmits signals via fiber optics to displays, controllers, and the PCS.~~

~~(c) Receives signals via fiber optics, then multiplexes and prepares them for use in interfacing non-safety-related equipment as required.~~

~~(d) Formats and transmits processed control signals via fiber optics to actuator circuits, and then converts the fiber optic control signals to electrical signals for the actuator circuits.~~

~~(2) System Interface~~

~~The NEMS interfaces with the following systems, which are all non-safety-related:~~

~~- Reactor~~

~~- Nuclear Boiler (non-safety-related portion)~~

~~- Reactor Recirculation~~

~~- Rod Control~~

~~- Feedwater Control (including feedwater pump turbine)~~

~~- Recirculation Flow Control~~

~~- Steam Bypass and Pressure Control~~

~~- Process Computer~~

~~- Power Generation Control~~

~~- Process Radiation Monitoring (non-safety-related portion)~~

~~- Area Radiation Monitoring~~

~~- Dust Radiation Monitoring~~

~~- Refueling and Reactor Servicing~~

~~- Reactor Water Cleanup~~

~~- Fuel Pool Cooling and Cleanup~~

~~- Suppression Pool Cleanup~~

~~- Control Complex~~

~~- Makeup Water (purified, condensated)~~

~~- HVAC Normal Cooling Water~~

~~- Ultimate Heat Sink~~

~~- Turbine Service Water~~

~~- Steam and Heated Water~~

~~- Compressed Gas~~

~~- Sampling~~

~~- Condensate Demineralizer/Filter Facility~~

~~- Radwaste (includes Offgas)~~

~~- Turbine Bypass~~

~~- Turbine Control~~

~~- Feedwater Condensate Water~~

~~- Heater Drain~~

~~- Lubricating Oil~~

~~- Turbine Gland Steam~~

~~- Extraction~~

~~- Main Generator~~

~~- HVAC Reactor Building~~

~~- HVAC Other Buildings~~

~~- Electrical Power Distribution (non-safety-related portion)~~

~~- Annunciator~~

~~(3) Classification~~

~~The NEMs, of itself, is neither a power generation system nor a protection system. It is a support system utilized for assimilation, transmission and interpretation of data for power generation (non-safety-related) systems and their associated sensors, actuators and interconnections. It is classified as non-safety-related.~~

~~(4) Power Sources~~

~~The NEMS receives its power from three separate non-Class 1E distribution panels from the non-Class 1E 120 VAC UPS. This redundancy allows the NEMS to supply triplicated logic functions such that any single failure in the system power supplies will not cause the loss of the validated outputs to the interfacing actuators and to the monitors and displays.~~

~~(5) Equipment~~

~~The hardware and "firmware" architectures for the NEMS are the same as those of the EMS, which are described in Appendix 7A [see the response to NRC Requests (10) and (11) of Section 7A.2].~~

~~(6) Testability~~

~~The EMS test features described in Appendix 7A, Section 7A.2, Items (3), (4) and (6) are generally equivalent for the NEMS, except that the NEMS does not interface with, nor rely upon, the SSLC [see the response to NRC Request (6) of Section 7A.2]. Also, the NEMS self-test features include the analog fault-tolerant voting system unique to the control systems employing logic.~~

~~(7) Environmental Considerations~~

~~The NEMS is not required for safety purposes, nor is it required to operate after the design basis accident. Its support function serves power generation purposes only and it is designed to operate in the normal plant environment.~~

~~(8) Operational Considerations~~

~~The system automatically initiates for both cold and warm starts. No operator actions are required in that the system is capable of self-starting following power interruptions, or any other single failure, including any single processor failure. After repairs or replacements are performed, the system automatically re-initializes to normal status when power is restored to any unit and automatically resets any alarms.~~

~~(9) Operator Information~~

~~The self-test provisions are designed to alert the operator to system anomalies via interfaces with the process computer and the annunciator. Problems significant enough to cause system channel failures are~~

~~*annunciated separately from those which allow continued operation. The circuitry is designed such that no control output or alarm is inadvertently activated during system initialization or shutdown. For such events, control outputs change to predetermined fail-safe outputs.*~~

7.7.2.1 Nuclear Boiler System—Reactor Vessel Instrumentation

7.7.2.1.2 Specific Regulatory Requirements Conformance

STD DEP T1 3.4-1

STD DEP 1.8-1

(2) Regulatory Guides (RGs)

In accordance with the Standard Review Plan for Section 7.7 and with Table 7.1-2, only RG 1.151(Instrument Sensing Lines) need be addressed for the ABWR.

(a) ***Criteria****: RG 1.151— "Instrument Sensing Lines"*

(b) ***Conformance****: There are four independent sets of instrument lines which are mechanically separated into each of the four instrument divisions of the NBS (see Figure 5.1-3, NBS P&ID). Each of the four instrument lines interfaces with sensors assigned to each of the four Class 1E electrical divisions for safety-related systems.*

There are also non-Class 1E instruments that derive their input for the reactor vessel instrumentation portion of the NBS from these lines. There is no safety-related controlling function involved in this instrumentation and it is entirely separate (including its own ~~MUX system~~ data communication network*) from the safety-related instruments and their associated systems.*

The safety-related instrumentation provides vessel pressure and water level sensing for all protection systems. These instruments are arranged in two-out-of-four logic combinations and their signals are shared by both safety-related and non-safety-related systems. All of these signals are ~~multiplexed and~~ passed through fiber-optic media before entering the voting logic of the redundant divisions of the safety-related systems; or of non-safety-related systems which make up the various networks. Separation and isolation is thus preserved both mechanically and electrically in accordance with IEEE ~~279~~ 603 *and Regulatory Guide 1.75.*

7.7.2.5 ~~*Process Computer System*~~ Plant Computer Function—Instrumentation and Controls

General Functional Requirements Conformance

STD DEP T1 3.4-1

STD DEP Admin

The ~~Process Computer System (PCS)~~ Plant Computer Function (PCF) *is designed to provide the operator with certain categories of information and to supplement procedure requirements for control rod manipulation during reactor startup and shutdown. The* PCF *~~system~~ augments existing information from other systems such that the operator can start up, operate at power, and shut down in an efficient manner. The ~~PGCC~~* PGCS *function provides signals to the ~~Automated~~* Automatic *Power Regulator (APR) as explained in Subsection 7.7.1.5.~~1~~2. However, this is a power generation function. Neither the ~~PCS~~* PCF *nor its ~~PGCC~~* PGCS *function initiate or control any engineered safeguard or safety-related system.*

7.7.2.5.2 Specific Regulatory Requirements Conformance

STD DEP T1 3.4-1

Table 7.1-2 identifies the non-safety-related control systems and the associated codes and standards applied in accordance with Section 7.7 of the Standard Review Plan for BWRs. However, since the computer has no controlling function, none of the listed criteria is applicable.

Input data for the ~~PCS~~ PCF *are derived from both Class 1E and non-Class 1E sources. All such interfaces are optically isolated, where necessary, to assure the proper separation of redundant signals in accordance with Regulatory Guide 1.75.*

7.7.2.6 Neutron Monitoring System—ATIP Subsystem Instrumentation and Controls

7.7.2.6.2 Specific Regulatory Requirements Conformance

STD DEP 7.7-23

Table 7.1-2 identifies the non-safety-related control systems and the associated codes and standards applied in accordance with Section 7.7 of the Standard Review Plan for BWRs. However, since the ATIP System has no controlling function, and is used only for calibration of the LPRMs, none of the listed criteria is applicable. However, the ATIP system does have isolation valves, which are safety-related components that would require the system to perform automatic containment isolation function. The following analysis lists the applicable criteria in order of the listing on the table, and discusses the degree of conformance for each. Any exceptions or clarifications are so noted.

(1) General Design Criteria (GDC)

(a) **Criteria**: GDC 56

(b) **Conformance**: The ATIP component design is in compliance with this GDC by following the guidance of Reg. Guide 1.11.

(2) Regulatory Guide (RG)

(a) **Criteria**: RG 1.11

(b) **Conformance**: The ATIP component design conforms to the above-listed RG.

7.7.2.8 Steam Bypass and Pressure Control System—Instrumentation and Controls

7.7.2.8.1 General Functional Requirements Conformance

STD DEP 7.7-24

STD DEP Admin

The Steam Bypass & Pressure Control (SB&PC) System is a power generation system in that it inputs information to the Automatic Power Regulator, which, in turn, controls reactor power by manipulating control rods (via the RCIS) or recirculation flow (via the RFC System). The protective scram function is entirely separate (via the RPS).

The SB&PC is classified as ~~non-safety related~~ nonsafety-related *~~and does not interface with any engineered safeguard or safety related system.~~*; SB&PC system does receive reactor pressure and water level from the NBS system (safety system) but only from nonsafety instrumentation.

7.7.2.8.2 Specific Regulatory Requirements Conformance

STD DEP Admin

Table 7.1-2 identifies the ~~non-safety related~~ nonsafety-related *control systems and the associated codes and standards applied in accordance with Section 7.7 of the Standard Review Plan for BWRs.*

7.7.2.9 ~~*Non-Essential Multiplexing System*~~ Plant Data Network—Instrumentation and Controls

7.7.2.9.1 General Requirements Conformance

STD DEP T1 3.4-1

The ~~NEMS~~ PDN*, of itself, is neither a power generation system nor a protection system. It is a ~~support system~~* data communication network *utilized for assimilation, transmission and interpretation of data for power generation (non-safety-related) systems and their associated sensors, actuators and interconnections. It is classified as non-safety-related and does not interface with any engineered safeguard or safety-related system except for isolated alarms for annunciation* and isolated information for operational support functions*.*

The ~~NEMS~~ PDN is an integral part of the power generation systems which it supports. As such, it meets the same functional requirements imposed on those systems. Although not required to meet the single-failure criterion, the system is redundant and receives its power from redundant, highly reliable power sources such that no single failure will cause its basic function to fail.

7.7.2.9.2 Specific Regulatory Requirements Conformance

STD DEP T1 3.4-1

STD DEP Admin

Table 7.1-2 identifies the ~~non-safety related~~ nonsafety-related *control systems and the associated codes and standards applied in accordance with Section 7.7 of the Standard Review Plan. However, as mentioned above, the ~~NEMS~~* PDN *is not a separate control system subject to separate review, but is the data communication vehicle for virtually all of the non-safety- related systems. It provides specific enhancement for all control systems in their conformance with GDCs 13 and 19.*

Table 7.7-1 ~~RCIS Module Operation Environment~~ Not Used

	~~Minimum~~	~~Design Center~~	~~Maximum~~	~~(Units)~~
~~(1)Temperature~~				
~~(a) Operating~~	~~–10~~	~~20~~	~~50~~	~~°C~~
~~(b) Non-operating~~	~~–20~~		~~60~~	~~°C~~
~~(2)Relative Humidity (Non-condensing)~~				
~~(a) Operating~~	~~10~~	~~50~~	~~90~~	~~%RH~~
~~(b) Non-operating~~	~~5~~		~~95~~	~~%RH~~
~~(3)Atmospheric Pressure~~				
~~(a) Static~~	~~0.09~~	~~0.1~~	~~0.11~~	~~MPa~~
~~(4)Radiation:~~	~~Operating gamma dose rate [0.036 mGy (carbon)/h] integrated dose over qualified life [100 Gy (carbon)]~~			
~~(5)Seismic:~~	~~All RCIS modules and cabinets are designed to operate correctly during accelerations of 2 g's in any plane for one minute over the frequency range of 0.1 to 30 Hz. All RCIS cabinets are designed to be capable of withstanding an acceleration of 5 g's in any plane for one minute over the frequency range of 0.1 to 30 Hz without sustaining damage.~~			

The following figures are located in Chapter 21:

- Figure 7.7- 2 Rod Control and Information System IED (Sheets 1-5)
- Figure 7.7- 3 Rod Control and Information System IBD (Sheets 1-15, 18-37, 42, 44, 48, 50, 52-55, 57 including 33 A and 37A)
- Figure 7.7-4 Control Rod Drive System IBD (Sheet 1)
- Figure 7.7- 5 Recirculation Flow Control System IED (Sheets 1-2)
- Figure 7.7- 7 Recirculation Flow Control System IBD (Sheets 1 - 3, 5 - 8)
- Figure 7.7- 8 Feedwater Control System IED (Sheets 1-3)
- Figure 7.7- 9 Feedwater Control System IBD (Sheets 1 - 14 including 6a and 9a)

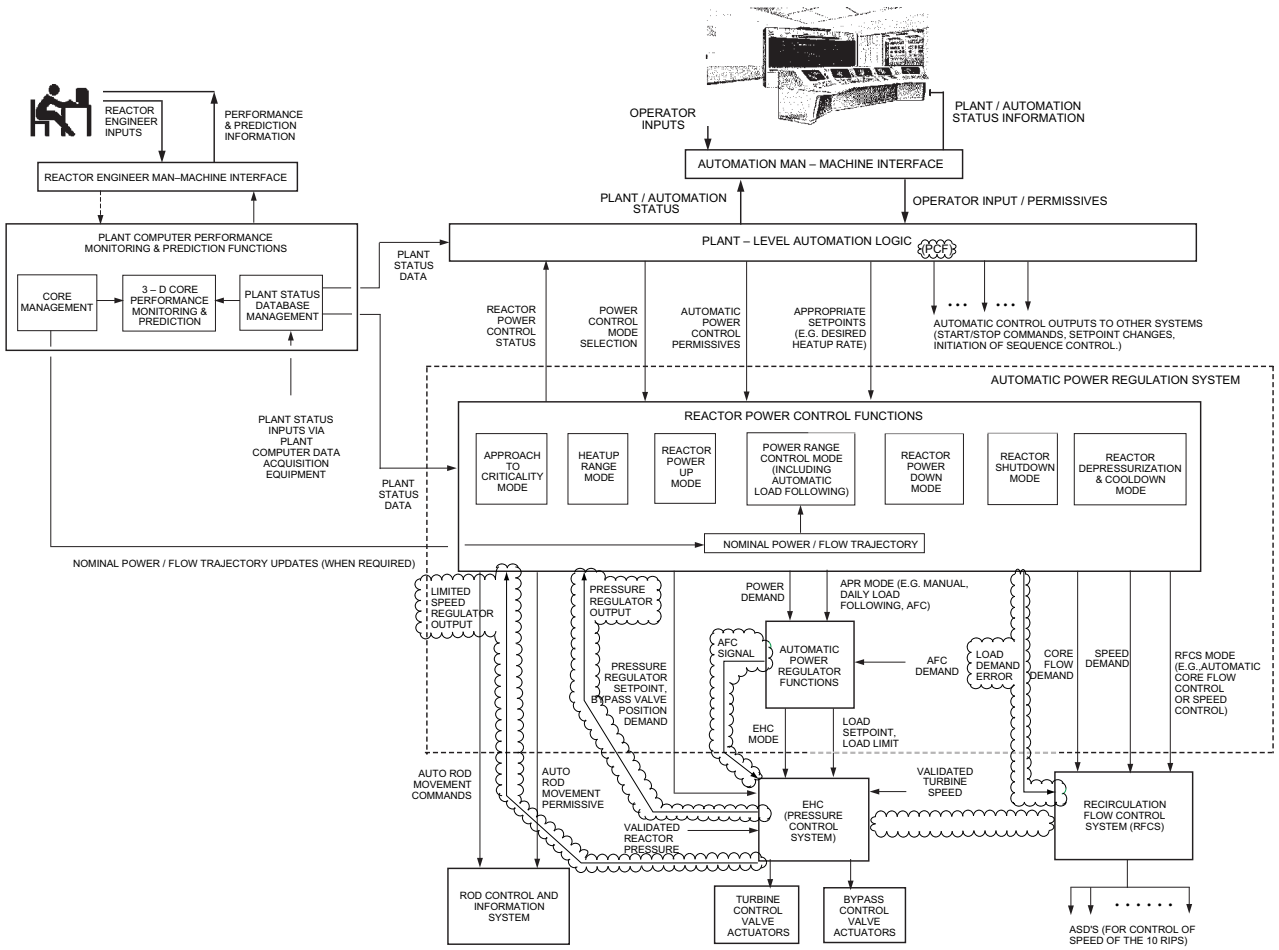

Figure 7.7-11 Simplified Functional Diagram of the Automatic Power Regulation System

The following figures are located in Chapter 21:

- Figure 7.7-12 Steam Bypass and Pressure Control System IED (Sheets 1-2)
- Figure 7.7-13 Steam Bypass and Pressure Control System IBD (Sheets 2-5)

7.8 COL License Information

This section of the reference ABWR DCD, including all subsections, is incorporated by reference with the following supplements.

7.8.1 Effects of Station Blackout on the HVAC

The following standard supplement addresses COL License Information Item 7.3.

During the station blackout (SBO) scenario, control room HVAC can be unavailable for up to 10 minutes while the Alternate AC source starts and connects to the safety buses. A control room temperature rise analysis using as-procured and as-built equipment information will be provided prior to fuel load for the station blackout (SBO) scenario. The analysis will demonstrate that the equipment available and used during SBO will not generate sufficient heat to raise environmental temperatures above the qualified limits of the operating equipment. In accordance with 10 CFR 50.71(e), the FSAR will be updated to reflect the results of that analysis. (COM 7.8-1).

7.8.2 Electrostatic Discharge on Exposed Equipment Components

The following site-specific supplement addresses COL License Information Item 7.4.

The RPS and ELCS equipment is housed in a metallic enclosure with doors and proper ESD precautions are used prior to servicing the equipment.

Other precautions against the effects of ESD take the form of adequate insulation or proper grounding. Keypads generally have insulating material in the form of a thick plastic covering over the metallic switch contacts. Toggle switches and other controls have insulating knobs. Various metallic chassis components (front panel, handles, deck, connector shells) are grounded to each other (the effects of painted and plated surfaces are considered), and the chassis are grounded to the appropriate panel or instrument ground bus by metallic ground straps.

The equipment is designed to tolerate an electrostatic discharge without damage, partly by employing insulation (with no air gaps) over exposed metallic components, and primarily by providing an alternative path for current flow other than through sensitive circuit paths. As discussed previously, this means that all exposed metallic components of the system are grounded. Low inductance multipoint grounds are used where ESD current flow is desired and single-point grounds where discharge flow is not wanted. Special attention is given to hinges, joints, and seams so that the continuity of shielding is maintained.

In the system configuration, where shielded cables transfer data between the equipment enclosures, the cables are prevented from propagating ESD currents and voltages between system units. For ABWR safety systems, the problem has been reduced by using fiber optic cables as the transmission medium for most critical signals. While the cables may contain metallic supporting members or protective shields, these are not electrically connected to any equipment or circuit. For certain functions where hardwired cable is required, solid grounding of cable shields to the equipment chassis at all inputs and outputs is used to divert ESD currents to ground.

The lack of susceptibility of ABWR control equipment to electrostatic discharges shall be verified using the test procedures included in IEC Publication 61000-4-2, Electromagnetic Compatibility (EMC) - Part 4-2: Testing and Measurement Techniques - Electrostatic Discharge Immunity Test. The test procedures of Part 4-2 will be used to qualify electrical and electronic equipment subjected to static electricity discharges. The following acceptance criteria will be used:

(1) No change in trip output status shall be observed during the test.

(2) Equipment shall perform its intended functions after the test.

This result will be verified via ITAAC Table 3.4 Item 12.

The safety system control equipment for ABWR has inherent protection against transient ESD effects in that it is housed in a metallic enclosure with doors and that proper ESD precautions are used prior to servicing the equipment. Further protection is provided by the asynchronous, four-division, 2-out-of-4 channel configuration. Temporarily corrupted data in one division cannot cause an inadvertent trip or permanently disable a required trip. When bad data or equipment damage is detected, the affected division can be bypassed until repaired. In the reactor trip and isolation system (RTIS) channels, where the final trip outputs are also in a 2-out-of-4 configuration, both the sensor input and trip output sides of each equipment division can be bypassed, thus preventing failure from any cause in one channel from inhibiting or inadvertently causing a trip.

7.8.3 Localized High Heat Spots in Semiconductor Materials for Computing Devices

The following standard supplement addresses COL License Information Item 7.5 and incorporates design-related information originally provided in Chapter 20 of the DCD.

Equipment purchase specifications for the Safety System Logic and Control (SSLC) systems will include the following provisions:

- Supplier shall follow vendor recommendations for the design and use of heat sinking and ventilation of local areas where power semiconductors of solid-state load drivers are used.
- Supplier shall design solid-state load drivers such that high power devices will be physically separated from low power circuitry in accordance with vendor recommendations.
- Supplier shall design the SSLC computing devices for the external cabinet environment according to the environmental tables in Appendix 3I.
- Supplier shall perform environmental qualification of SSLC equipment, including temperature and humidity in accordance with IEEE 323.
- Supplier shall be permitted to provide the RPS equipment that utilizes convective cooling (no fans) only.

- Supplier shall be permitted to provide the ELCS equipment that utilizes internal forced air cooling. A local temperature sensor and diagnostic alarm shall be provided for each cabinet.
- The temperature rise internal to the cabinet shall be verified during environmental qualification and during factory acceptance testing for each cabinet.

The above provisions will be completed at the time that purchase orders are placed for the SSLC systems. In accordance with 10 CFR 50.71(e), the FSAR will be updated to reflect the results of the environmental qualification. (COM 7.8-2)

7.8S Diverse Instrumentation and Control Systems

Subsection 7C.5 addresses diversity of the instrumentation and control systems.

7.9S Data Communication Systems

7.9S.1 Description

This section addresses both the essential (safety-related) and non-essential (nonsafety-related) data communication functions, as specified in RG 1.206, that are part of or support the instrumentation and control (I&C) systems described in Sections 7.1 through 7.8. This includes data communication between systems and between divisions within a system. Communication within a system is an integral part of that system.

The Data Communication Functions (DCFs) of the Reactor Trip and Isolation System (RTIS), Neutron Monitoring System (NMS), and ESF Logic and Control System (ELCS) are required to support the safety-related functions of these systems. The DCFs of these systems are an integral part of these systems.

The majority of the non-essential data communications are performed through a plant-wide distributed data network defined as the Plant Data Network (PDN). The PDN provides the distribution of process and other data required to support the nonsafety-related operational functions.

Figure 7.9S-1 provides an overview of the ABWR data communication configuration.

7.9S.2 Data Communication Functions (DCFs) of the SSLC Systems

7.9S.2.1 Safety-Related Functions

The safety-related DCFs (also termed Essential Communication Functions (ECFs)) associated with the Safety System Logic and Control (SSLC) systems perform data collection and data distribution using both local and remote data acquisition and control units connected by dedicated data links and/or networks for each of the following systems, segments, and divisions:

- RTIS (4 divisions)
- NMS (4 divisions)
- ELCS (4 divisions), including the safety-related Main Control Room panel displays
- Other safety-related I&C platforms (divisions as described in other FSAR sections)

7.9S.2.2 Nonsafety-Related Functions

The safety-related digital systems described here also provide the following nonsafety-related communication functions:

- Provide alarm and status data from safety-related plant sensors and the SSLC systems to the nonsafety-related Plant Information and Control System (PICS) for Main Control Room (MCR) indication and computer logging through isolated interfaces and the PDN.

- Provide selected safety-related plant process data to the nonsafety-related control systems through isolated interfaces. The interconnection of Class 1E communication to non-Class 1E devices is done using fiber optic cable. The fiber optic cable provides the necessary electrical isolation. Communication to nonsafety-related systems are controlled by the safety device to assure no communication task will interfere with the safety system performing intended functions.

- Provide for the transfer of the NMS calibration data from the nonsafety-related PCF to the NMS. Plant personnel action to manually accept the data transfer to the operational safety side is required for such data to be accepted.

7.9S.2.3 Communication Within a Division

The safety-related data communication is based on serial, point-to-point data transmission. The transmission is purely unidirectional without acknowledgment from the other side. The transmitting and receiving devices are optically isolated from each other. The integrity of the links and the data transmitted is monitored by the receiver. The data transmission cycle time is fixed and the communication is deterministic. Self diagnostics are used to monitor the proper operation of data links.

Use of a system or segment data communication function to communicate command and control signals to final actuators varies by each system or segment. ELCS provides control signals to remote input/output devices through its data communication links. RTIS inputs and control outputs are directly connected to field devices. NMS provides no control signals to final actuators, but does provide direct connected trip data to RTIS .

Safety-related data communication is used by RTIS and NMS to transmit safety related display information to the ELCS.

The ELCS utilizes a deterministic network within each division to support main control room safety related displays and maintenance and test functions.

7.9S.2.4 Communication Between Divisions

For RTIS and ELCS, limited communication between divisions is necessary. For example, individual divisional input trip determinations must be shared between divisions in order to support two-out-of-four voting for divisional trip outputs. To support this, there are a limited set of dedicated data communication links from each division to each of the other divisions. The links provide a qualified and isolated, point-to-point, single direction communication path between divisions so as to preserve divisional independence.

The NMS does not rely on data communication between divisions.

7.9S.2.5 Design-Basis Information

The safety-related DCFs (also termed ECFs) have the following safety design basis:

- Provide for the transmittal of data between input/output (I/O) devices, (locally and remotely) and controllers. This allows process information, equipment status information, and operator input to be made available to controllers for the processing of safety-related control functions, and making the controller output information available to I/O devices for distribution to final actuators and operator interfaces.
- Provide for the transmittal of data between divisions or from safety-related systems to nonsafety-related systems through qualified isolation devices such as fiber optic communication.
- Provide data communication that is predictable and verifiable (deterministic) and that does not compromise the functionality of either the transmitting or receiving system.

7.9S.2.5.1 Quality of Components and Modules

Applicable quality assurance provisions of 10 CFR 50 Appendix B, IEEE-603 and IEEE-7-4.3.2 are applied to the SSLC systems, of which the ECFs are integral parts.

7.9S.2.5.2 Software Quality

Development of software for the safety system functions within the SSLC systems, including their ECFs, conforms to the guidance of IEEE-7-4.3.2 and Branch Technical Position BTP- HICB-14 as discussed in Appendix 7B to this chapter.

7.9S.2.5.3 Protocol Support of Performance Requirements

The real-time performance of SSLC systems, including their ECFs, in meeting the requirements for safety system trip and initiation response conforms to BTP-HICB-21. Each communication interface operates independently and asynchronously with respect to other communication interfaces. Maximum time delay from input to output is deterministic, based on the control logic and communication design. Data rates (bandwidth) are constant as the communication modules provide the same data elements to each destination at the prescribed frequency. Timing signals are not exchanged between divisions of independent equipment or between controllers within a division. Timing requirements of IEEE-603 are also met.

7.9S.2.5.4 Reliability

The simplicity of the communication design, combined with self diagnostics make the ECFs of the SSLC highly reliable. The two-out-of-four logic prevents any single error from causing or preventing an actuation of functions.

Errors are detected by self-diagnostic tests (i.e. checksum, parity check, or reception of a keep-alive signal). Should data not be available, the logic takes predetermined action based on the specific data involved.

7.9S.2.5.5 External Access Control

There are no unprotected electronic paths by which unauthorized personnel can change plant software or display erroneous status information to the operators. Interfaces external to the plant are through security protected interfaces that allow communication between the nonsafety PDN to the offsite Emergency Operations Facility (EOF). Although the EOF Workstation contains login protection (passwords or other protective measures), the data access control resides in the site security protected interfaces and data servers.

The SSLC ECFs are additionally protected by isolated interfaces to the nonsafety PDN that only allow one-way data transfer from the safety to nonsafety network. The SSLC networks have no direct external electronic paths.

7.9S.2.5.6 Single Failure Criterion

The ECFs of the SSLC systems satisfy the requirements of the single-failure criterion through conformance to IEEE-603, IEEE-379 and Regulatory Guide 1.53. Communication between divisions preserves divisional independence such that a failure in one division does not affect other divisions.

7.9S.2.5.7 Independence

The ECFs of the SSLC systems satisfy the requirements for independence through conformance to Clauses 4.6 and 4.7 of IEEE-279, IEEE-384, IEEE-603, and Regulatory Guide 1.75. Divisions are physically separated and electrically isolated from each other. Divisions have separate power sources. Transmission of logic signals between divisions is through qualified isolation devices.

NMS can receive calibration data from nonsafety-related maintenance support systems. On a divisional level, a division must be manually placed in inop and manually verified and accepted before such data is allowed in the portion of the device performing the safety function. Only limited data in a strict format will be accepted by the safety device.

To meet the requirements of IEEE-384 and Regulatory Guide 1.75, the protective covering of the fiber optic-based cables are flame retardant. The cables are passed through physical, safety class barriers, where necessary, for separation of Class 1E circuits and equipment from other Class 1E equipment or from non-Class 1E equipment. The ECF equipment is kept physically separate to minimize the effects of design basis events. During operations, the functionality of the ECFs of SSLC, NMS and RTIS is independent of nonsafety systems.

7.9S.2.5.8 Protection System Failure Modes

The RTIS and NMS systems are designed to fail into a safe state upon loss of communications. ELCS fails as-is during communication failure, that is, system controllers continue to operate based on the last command.

7.9S.2.5.9 Testing and Surveillance

The safety-related DCFs (ECFs) are integral functions of the SSLC systems. SSLC testing features and surveillances encompass those related to the ECFs. SSLC testing and surveillance is covered in 7.1.2.1.6.

7.9S.2.5.10 Bypass and Inoperable Status Indications

The safety-related DCFs (ECFs) are integral functions of the SSLC systems. SSLC bypass and inoperable status indications encompass those related to the ECFs that provide information for compliance with RG 1.47.

7.9S.2.5.11 Isolation Protection

Fiber optic-based isolation devices are expected to have less difficulty than previous isolation devices in complying with all qualification requirements due to their small size, low mass, and simple electronic interfaces. The basic materials and components, except for the fiber optic cable itself, are the same as those used in existing, qualified isolation devices. A major advantage of fiber optics is that signals can be transmitted long distances and around curves through the isolating medium; thus, the physical, safety-class barrier required for separation of Class 1E devices may be provided by just the cable length if the protective covering and any fill materials of the cable are made properly flame-retardant. For short distances, the fiber optic cable can be fed through a standard safety class structure.

7.9S.2.5.12 Diversity and Defense-in-Depth

Diversity and defense-in-depth is covered in Appendix 7C. FMEA is discussed in Appendix 15B.

7.9S.2.5.13 Seismic Hazards

All of the equipment implementing the ECFs of the SSLC is located in Seismic Category I structures and meets RG 1.100 and IEEE 344.

Fiber optic isolation devices are expected to have less difficulty than previous isolation devices in complying with all qualification requirements due to their small size, low mass, and simple electronic interfaces. The basic materials and components, except for the fiber optic cable itself, are the same as those used in existing, qualified isolation devices.

7.9S.2.6 Analysis

7.9S.2.6.1 General Requirements Conformance

The ELCS, RTIS and NMS each have safety-related data communication functions for data collection and data distribution. Each system provides four independent communication functions to serve the four divisions of plant protection and safety systems and safety- related display systems. These communication functions are classified as safety-related since they are considered integral parts of the safety-related systems that they serve.

7.9S.2.6.2 Specific Regulatory Requirements Conformance

The safety-related DCFs are integral functions of the SSLC systems. Conformance to specific regulatory requirements related to the safety-related DCFs is addressed in the sections related to the SSLC systems.

7.9S.3 Plant Data Network (PDN)

7.9S.3.1 Plant Data Network (PDN) Functions

The Non-Essential Communication Functions (NECFs) support the data communications for non-safety-related plant functions. The NECFs are implemented through the use of a distributed Plant Data Network (PDN). The PDN provides a plant wide, highly reliable, high speed data communication network for plant control, monitoring, and other related operational needs.

The PDN is nonsafety-related and supports the collection and distribution of data for multiple systems using a layered network design. A control layer is designated for systems and information that directly impact plant operation. The PDN has other communication layers that support other selected nonsafety-related functions.

The control network supports data communication between:

- Process I/O units, controllers, engineering workstations
- Network monitoring, historical data storage units, control building workstations
- Main control room panel displays and workstations that support the operator interfaces
- Printers
- Network gateways that support the one-way acquisition of data from the safety systems for plant data historian recording and for use on nonsafety displays.

The PDN supports data communication to workstations for the Technical Support Center (TSC), the Emergency Operations Facility (EOF) and other external data users (e.g., engineering offices). External connectivity is limited and only provided from the network through a security protected interface.

The PDN is designed around a fully redundant, fiber-optic based backbone. The backbone is defined as the cabling between the core switches and between the core and zone switches. The PDN provides sufficient throughput capacity to support all of the data communication needs including the PICS needs to acquire, process and store data at the required scan and processing rates from available data sources, as well as support displays.

7.9S.3.1.1 PDN System Interfaces

The PDN interfaces with the controllers, gateways, communication interface modules, engineering workstations, main control panel workstations and printers through zone

switches. The PDN also interfaces with the ELCS and RTIS through isolated interfaces that only allow one-way data transfer from the ELCS and RTIS to the PDN. The isolation method is through the use of fiber optic-based communication that does not have the capability of receiving communications from the transmitting source. Interface to the NMS is explained in 7.9S.2.2.

The PDN also interfaces with the TSC and EOF through a security protected interface, for example a firewall.

7.9S.3.1.2 PDN Classification

The PDN is classified as nonsafety-related. The PDN is essential to power generation through its data communication support of operation and the power generation systems control and monitoring functions performed by other equipment.

7.9S.3.1.3 PDN Power Sources

Two separate Non-Class 1E feeds from the Non-Class 1E 120 Vital AC (VAC) or 125 VDC systems power the PDN. This redundancy allows the PDN to operate such that any single failure in the system power supplies will not cause the loss of data communications to the interfacing systems or equipment.

The power sources automatically switch over upon failure of one power source or power supply module.

7.9S.3.1.4 PDN Equipment

PDN hardware includes core switches, zone switches, security devices, mounting cabinets, patch panels, fiber-optic cables and associated junction boxes and cable supports.

7.9S.3.1.5 PDN Testability

Network monitoring is an integral part of the PDN and provides the capability to continuously monitor network operation and performance. Network monitoring workstations allows system management, test, and control of the PDN functions.

7.9S.3.1.6 PDN Environmental Considerations

The PDN is designed to operate in the normal plant environment where it is located. Its support function serves power generation purposes only. It is not required for safety purposes and is not required to operate after a design basis accident.

7.9S.3.1.7 PDN Operational Considerations

No operator actions are required since the system is capable of self-starting following power interruptions, or any other single failure, including any single switch failure. After repairs or replacements are performed, PDN equipment automatically re-initializes to normal status when power is restored.

7.9S.3.1.8 PDN Operator Information

The self-test provisions of the PDN are desired to alert the operator to system anomalies via alarms. Problems are alarmed . The system is designed such that no control output or alarm is inadvertently activated during system initialization or shutdown.

7.9S.3.2 PDN Design Basis Information

The PDN has no safety design basis.

General Design Functions

The PDN provides a plant wide distributed data communication networks to support the plant control and monitoring (nonsafety-related) systems. The PDN includes the active electrical components and connectivity (such as switches and cabling), between the components defined by other plant systems. The PDN also includes the associated communication software required to support its function of providing plant-wide data for distributed control and monitoring.

The PDN is the means by which process data is distributed to the various nonsafety-related plant control and information systems requiring data and to the main control room for processing and display.

(1) System Interface

The PDN control network interfaces with nonsafety-related controllers, gateways, communication interface modules, engineering workstations, main control panel workstations, and printers through zone switches.

(2) Classification

The PDN, of itself, is neither a power generation system nor a protection system. It is a data communication network utilized for transmission of data for power generation (nonsafety-related) systems. It is classified as nonsafety-related.

(3) Power Sources

The PDN receives its power from two separate non-Class 1E distribution panels from the non-Class 1E 120 VAC UPS and 125 VDC. This redundancy allows the PDN to supply dual logic functions such that any single failure in the system power supplies will not cause the loss of the validated outputs to the interfacing actuators and to the monitors and displays.

(4) Equipment

The PDN hardware is comprised of fiber optic-based or direct connection cabling, switches, security devices and gateway devices. These interface with the PICS control devices and gateways.

(5) Diagnostics and Testability

The PDN contains built in, continuously running, self-diagnostic capabilities to sense and correct or block data and device errors. Faults or problems are logged and alarmed.

(6) Environmental Considerations

The PDN is not required for safety purposes, nor is it required to operate after the design basis accident. Its support function serves power generation purposes only and it is designed to operate in the normal plant environment.

(7) Operational Considerations

The PDN automatically initiates for both cold and warm starts. No operator actions are required in that the PDN is capable of self-starting following power interruptions, or any other single failure, including any single processor failure. After repairs or replacements are performed, the PDN automatically re-initializes to normal status when power is restored to any unit and automatically resets any alarms.

(8) Operator Information

The self-test provisions are designed to alert the operator to system anomalies via interfaces with the PICS. The circuitry is designed such that no communication is inadvertently activated during network initialization or shutdown. For such events, control outputs change to predetermined fail-safe outputs.

The PDN has the following nonsafety-related design bases:

- Transmits data between controllers.
- Allows for process and equipment status information and operator input to be available to controllers for the processing of nonsafety-related control functions.
- Provides for the receipt of data from the safety-related DCFs through isolated interfaces to nonsafety-related workstations, controllers and historians for the purposes of display and alarm to operators, transient analysis and sequence-of-events recording and nonsafety-related control functions.
- Provides for the transmission of data to interfaces with the Technical Support Center (TSC) and Emergency Operations Facility (EOF).

7.9S.3.3 Analysis

7.9S.3.3.1 General Requirements Conformance

The PDN constitutes neither a power generation system nor a protection system, by itself. It is a support function utilized for the transmission of data for power generation

(nonsafety-related) systems and their associated sensors, actuators and interconnections. The PDN equipment is classified as nonsafety-related and does not interface with any engineered safeguard or safety-related system except for the reception of isolated signals for alarm, display or nonsafety-related control purposes as discussed in Subsection 7.9S.2.2. The PDN supports power generation systems. As such, it meets the same functional requirements imposed on those systems. Although not required to meet the single-failure criterion, the PDN equipment is redundant and receives its power from redundant, highly reliable power sources such that no single failure will cause its basic function to fail.

The PDN equipment and software is also diverse from those implementing the safety-related DCFs of the SSLC systems (different hardware and/or software) to minimize the effect of common-mode failures as discussed in IEEE7-4.3.2.

7.9S.3.4 Specific Regulatory Requirements Conformance

Table 7.1-2 identifies the nonsafety-related control systems and the associated codes and standards applied in accordance with Section 7.9 of the Standard Review Plan. It provides specific enhancement for control systems in their conformance with GDCs 13 and 19.

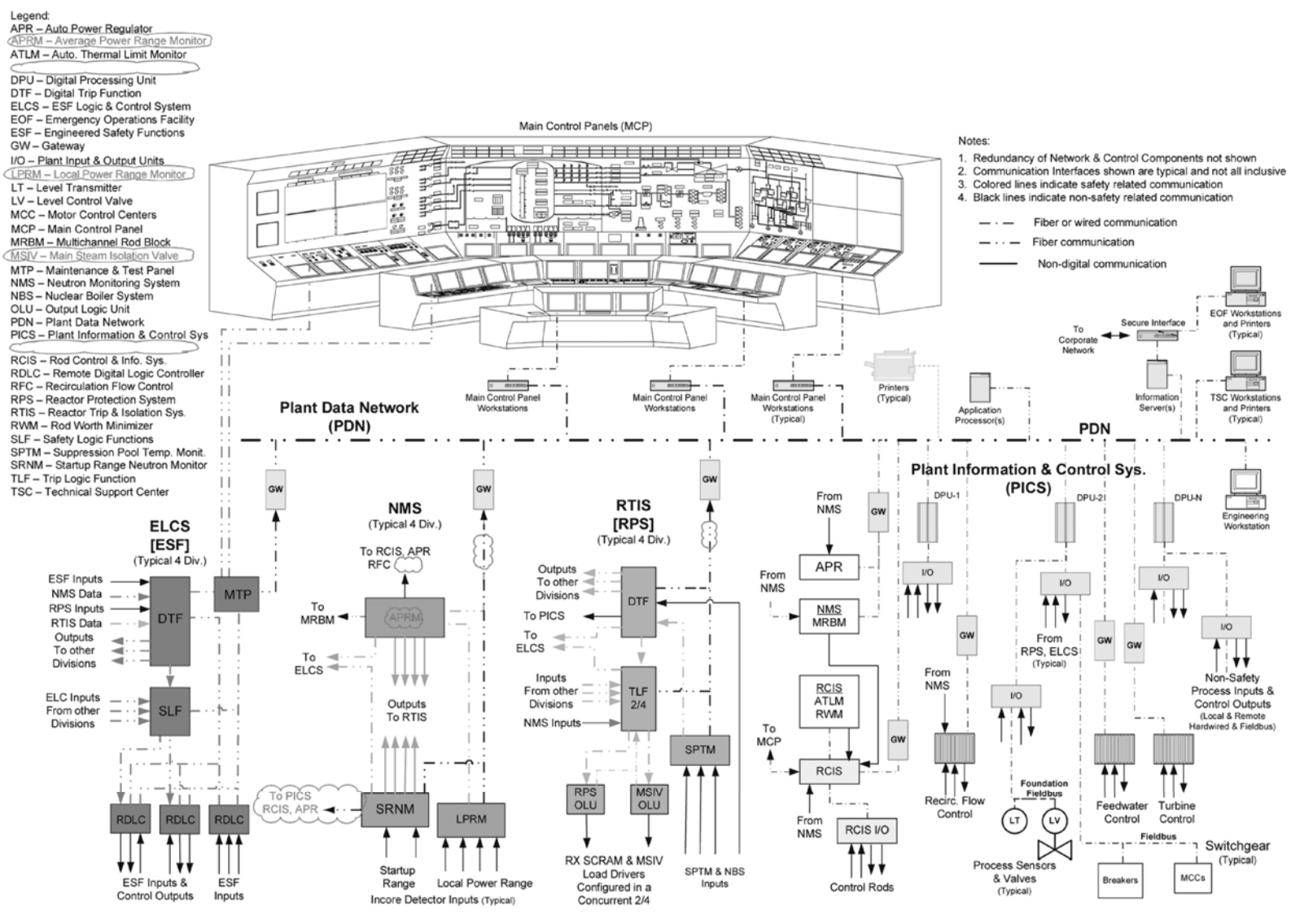

Figure 7.9S-1 Data Communication Interfaces

7A Design Response to Appendix B, ABWR LRB Instrumentation and Controls

The information in this section of the reference ABWR DCD, including all subsections, tables, and figures, is incorporated by reference with the following departures and supplements.

STD DEP T1 2.14-1 (Table 7A-1)

STD DEP T1 3.4-1 (Table 7A-1, Figure 7A-1)

STD DEP 1.8-1

STD DEP 16.3-100

STD DEP Admin

7A.1 Introduction

STD DEP T1 3.4-1

The instrumentation and control (I&C) systems of the ABWR use state-of-the-art fiber optic~~s,~~ -based communication equipment ~~multiplexing~~ and computer controls.

In Appendix B to the GE Advanced Boiling Water Reactor Licensing Review Bases (LRB), dated August, 1987, the NRC staff indicated that guidance in this area had not been developed. However, GE committed to address the standards and criteria currently specified in the SRP, and to use the documents and criteria identified in Appendix B.

The NRC requested considerable additional information specific to this equipment in Appendix B. The NRC requests, along with ~~GE's~~ responses as revised, are provided in this appendix to Chapter 7.

A Failure Modes and Effects Analysis (FMEA) of the Essential ~~Multiplexing System~~ Communication Functions (ECFs) is provided in Appendix 15B.

[The following two Items must be addressed when any change is made in the commitments of the ~~EMS~~ ECFs and Safety Systems Logic and Control (SSLC) systems Design~~s~~:

(1) Table 10 of DCD/Introduction identifies the commitments for ~~EMS~~ ECFs performance specifications and architecture which, if changed, requires NRC Staff review and approval prior to implementation. The applicable portions of the Tier 2 sections and tables, identified on Table 10 of DCD/Introduction for this restriction, are italicized on the sections and tables themselves.

(2) Table 11 of DCD/Introduction identifies the commitments for SSLC systems hardware and software qualification which, if changed, requires NRC Staff review and approval prior to implementation. The applicable portions of the Tier 2 sections and tables, identified on Table 11 of DCD/Introduction for this restriction, are italicized on the sections and tables themselves.] *

7A.2 [Multiplexing Systems

STD DEP T1 3.4-1

STD DEP 1.8-1

STD DEP Admin

NRC Request (1)*—Provide a complete list of components (pumps, valves, etc.) whose actuation, interlock, or status indication is dependent on the proper operation of each Class 1E multiplexer.*

Revised ***Response (1)****—*Class 1E multiplexers are not used in more modern I&C systems. Safety-related data communication is performed as an integral function of the SSLC systems. ~~*The*~~ A typical *list* of components whose actuation, interlock, or status indication depends on the proper operation of SSLC equipment implementing these essential communication functions (ECFs) *is provided as Table 7A.1. It was obtained by extraction from* ~~*the multiplexer*~~ an early version of the ABWR *I/O database which reflects information* that was *available on the system P&ID and IBD drawings* at the time of design certification. The inventory of components satisfying this criteria is subject to change as the detailed design is implemented.

NRC Request (2)*—For the components cited above, describe the means of remote or local control (other than by cutting wires or jumpering) that may be employed should the multiplexer fail.*

Revised ***Response (2)****—*Class 1E multiplexers are not used. Safety-related data communication is performed as an integral function of the SSLC systems. *All Class-1E* ~~*multiplex*~~ SSLC *hardware is designed to meet the single-failure criteria. Systems which employ such hardware have redundant* ~~*channels*~~ divisions of equipment *such that no single failure of any* ~~*MUX unit*~~ SSLC component, including those implementing the ECFs, *could jeopardize any safety system action. In addition, local control is provided, via the Remote Shutdown System, to bring the reactor to shutdown conditions in event of multiple safety system failures or evacuation of the control room. The Remote Shutdown System is hard-wired and therefore provides diversity to the* ~~*MUX*~~ SSLC *interfaces.*

NRC Request (3)*—Describe the multiplexer pre-operational test program.*

Revised ***Response (3)****—*Multiplexers are not used. Safety-related data communication is performed as an integral function of the SSLC systems. Non-safety data communication is performed by the Plant Data Network (PDN) and dedicated system level communication links. *The pre-operational test program will test the* ~~*multiplexers*~~ data communication functions (DCFs) *concurrently with instrumentation and control functional loop checks. As each input to* ~~*a remote multiplexing unit (RMU)*~~ an input/output (I/O) device *is simulated using a suitable input device, the required*

* *See Section 3.5 of DCD/Introduction.*

outputs shall be verified correct. In this manner, all hardware and software are confirmed concurrently.

Equipment verifications of the individual ~~multiplexing units~~ I/O devices *are performed at the factory and typically include detailed component level tests which require special test apparatus and technical expertise. Any malfunctioning not found during factory testing will be detected during pre- operational tests of instrument loops.*

~~Testing shall include~~ Preoperational testing includes *instrument loop checks*, and *calibration verification tests ~~and response time verification tests~~ as described in ANSI/IEEE-338.* Factory testing includes response time verification tests on the digital logic processing equipment. *~~If possible, the entire instrument loop shall be tested from sensor to output device(s). Otherwise, suitable input devices shall be used to simulate process inputs and the system outputs verified to be acceptable.~~*

In addition to the testing described above, tests shall be developed to verify system ~~redundancy and~~ electrical independence (ITAAC Table 3.4-1 Item 3)*.*

NRC Request (4)*—Describe the test and/or hardware features employed to demonstrate fault tolerance to electromagnetic interference.*

Revised ***Response (4)****—One major deterrence to electromagnetic interference (EMI) in the ~~multiplexing system~~* ECFs *is the use of fiber optic data links as the transmission medium. Optical fiber, being a non- electrical medium, has the inherent properties of immunity to electrical noise (EMI,* radio frequency interference *(RFI), and lightning), point-to-point electrical isolation, and the absence of conventional transmission line effects. Fiber optic ~~multiplexing~~* media *is also unaffected by the radiated noise from high voltage conductors, by high frequency motor control drives, and by transient switching pulses from electromagnetic contactors or other switching devices.*

However, the electrical-to-optical interface at the transmitting and receiving ends must still be addressed to ensure complete immunity to EMI. The control equipment containing the electrical circuitry use standard techniques for shielding, grounding, and filtering and are mounted in grounded equipment panels provided with separate instrument ground buses. Panel location, particularly in local areas, is carefully chosen to minimize noise effects from adjacent sources. The use of fiber optic cables ensures that current-carrying ground loops will not exist between the control room and local areas.

The use of redundancy provides the other major deterrence to EMI effects. ~~The safety-related multiplexing system uses redundant optical channels within each separated electrical division.~~ The ~~systems~~ divisions *are independent and will run asynchronously with respect to each other with ~~no~~* limited *communication between divisions. ~~However, data communication and transfer is synchronized within each division itself.~~ This arrangement provides fault tolerance to EMI or other noise occurring in isolated locations.*

During normal operation, ~~multiplexing system~~ data communication *performance will be monitored by online* diagnostic *tests such as parity checks, ~~data checks (boundary and~~*

~~*range), and transmission timing. If response time requirements permit, error correcting algorithms may be applied to mask noise effects. Periodic surveillance using offline tests such as bit error rate will be used to verify overall system integrity.*~~checksum verification or the reception of a keep-alive signal.

As part of the ~~*pre-operational*~~ equipment qualification *test program [see Request (3)], the* ~~*systems*~~ equipment qualification type test specimen *will be subjected to EMI testing. EMI and RFI test measurements will be developed using the guidelines described in ANSI/IEEE-C63.12, "American National Standard for Electromagnetic Compatibility Limits—Recommended Practice." For testing susceptibility to noise generation from portable radio transceivers, tests will be developed from ANSI/IEEE-C37.90.2, "IEEE Trial-Use Standard, Withstand Capability of Relay Systems to Radiated Electromagnetic Interference from Transceivers." Section 5.5.3 of this standard describes tests for digital equipment using clocked logic circuits.*

~~*With the system connected, each*~~ The type test specimen ~~*multiplexing unit (one at a time)*~~ *will be required to demonstrate immunity to the defined conducted and radiated tests. Units shall also comply with standard surge withstand capability tests, as follows:*

(a) ANSI/IEEE-C62.41—"Guide for Surge Voltages in Low-Voltage AC Power Circuits."

(b) ANSI/IEEE-C62.45—"Guide on Surge Testing for Equipment Connected to Low- Voltage AC Power Circuits."

The interconnecting fiber optic links of the ~~*multiplexing system and*~~ *SSLC* systems *are not subject to EMI effects.*

For design guidance and additional test development guidance, the following military standards shall be used:

(a) MIL-STD-461~~*C*~~ E*—"Electromagnetic Emission and Susceptibility Requirements for the Control of Electromagnetic Interference."*

~~*(b) MIL-STD-462—"Measurement of Electromagnetic Interference Characteristics."*~~ Not Used

Due to the comprehensive nature of these documents, their applicability to ground, airborne, and shipboard equipment, and the differences in requirements for the Army, Navy and Air Force, the use of these standards shall be limited to the susceptibility requirements and limits for class A3 equipment and subsystems (ground, fixed). Within these limits, the guidelines for Army procurements only shall be used. Tests for transmitting and receiving equipment, power generators, and special purpose military devices are not applicable.

[To facilitate achieving* electromagnetic compatibility (*EMC*) *compliance, system and equipment grounding and shielding practices will follow the guidance of the standards listed below:

(a) EEE Std. 518, "Guide for the Installation of Electrical Equipment to Minimize Electrical Noise Inputs to Controllers from External Sources."

(b) EEE Std. 1050, "Guide for Instrumentation and Control Equipment Grounding in Generating Stations."] *

NRC Request (5)*—Describe the interconnection, if any, of any Class 1E multiplexer to non-Class 1E devices such as the plant computer.*

Revised *Response* (5)—Class 1E multiplexers are not used. Safety-related data communication is performed as an integral function of the SSLC systems. *The interconnection of Class 1E ~~multiplexers~~ communication devices to non-Class 1E devices is done using fiber optic cable. The fiber optic cable will provide the necessary isolation.*

~~The plant process computer is~~ Non-Class 1E devices are *connected to a buffer module (memory storage module). Information is stored in this module by ~~the~~ 1E ~~MUX units~~* communication interface equipment *for access by ~~the process computer~~* non-Class 1E devices*, thus preventing any interruption by ~~the~~ Non 1E ~~process computer~~* devices *on the 1E* communication functions.

NRC Request (6)*—Describe the online test and/or diagnostic features that may be employed, including any operator alarms/indicators and their locations.*

Revised *Response (6)* ~~*The EMS self-test system relies on the Safety System Logic and Control (SSLC) test control unit, though it has also its own local self-test system. Local self-test in each EMS unit continues to provide diagnostic readout even if the test control unit fails.*~~ (An EMS is not used.)

*~~A c~~*C*ontinuously operating ~~self-test system~~*diagnostics *check~~s~~ all data transmission*s *and provide~~s~~ operators with fault information and fault location through ~~dedicated~~ alarm~~s~~ ~~and computer output~~. The ~~self-test system~~* diagnostics *operation or its failure cannot harm the operation of the safety systems.*

~~*Figure 7A-1 shows the general concept of the EMS interface with the test control unit.*~~ *The ~~online~~ test and diagnostic features including operator alarms and location are detailed as follows:*

- *Self-~~test~~* diagnostics and periodic testing *locates a fault down to the processing module level and provides positive local identification of the failed device.*
- *A periodic, ~~automatic~~ test feature verifies proper operation of the ~~EMS~~* ECFs*.*

* *See Section 7A.1(2) and 7A.1(1).*

- *Detection of fatal (affects signal transmission) and non-fatal (does not affect signal transmission) errors is annunciated ~~and relayed to the computer~~. Operators are informed on the type of malfunction and its location.*

- *~~Local self-test~~* Self-~~*is*~~ diagnostics are *continuous. System end-to-end test is initiated* as an off-line test *in one division at a time~~by communication between test units in each division.~~*

- *~~The logic returns to its original state after the test sequence is completed.~~ Indication~~s~~ of test ~~status (normal or in-test) and~~ results (pass, fail) is provided.*

- *The ~~test~~* diagnostic *function does not degrade system reliability.~~The test circuitry is physically and electrically separated and isolated from the functional circuitry insofar as possible. Testing~~* The diagnostic function *will not cause actuation of the driven equipment.*

- *~~Automatic initiation signals from plant sensors override an automatic test sequence and perform the required safety function.~~*

- *~~Failure of the test control unit does not affect the safety system functional logic.~~*

NRC Request (7)*—Describe the multiplexer power sources.*

Revised ***Response (7)****—*Multiplexers are not used. Safety related data communication is performed as an integral function of the SSLC systems. *The ~~multiplexer system~~* equipment implementing the ECFs *receives its power from the four-divisional battery*-backed ~~*125 VDC*~~ 120 VAC *buses (*uninterruptible*)* for RTIS and 125 VDC buses for ELCS*. These are discussed in Subsection* 8.1.2.2~~*8.3.2*~~ *and illustrated in Figure 8.3-4.*

NRC Request (8)*—Describe the dynamic response of the multiplexers to momentary interruptions of AC power.*

Revised ***Response (8)****—*Multiplexers are not used. Safety-related data communication is performed as an integral function of the SSLC systems. *Each of the four divisions of the ~~multiplexer system~~ SSLC systems is fed by the corresponding division of the 125 VDC battery. Therefore, the ECFs will not be affected by momentary interruption to the AC power. Extended losses of power in any division would not affect operations of safety functions because of multiplicity of divisional power (Figure 8.3-3).*

If ~~EMS~~ there is a loss of *power ~~is interrupted and subsequently restored, then the EMS unit reinitializes automatically and the system reconfigures to accept the signal transmission~~* to the ELCS system, it will assume a predefined safe state*.* If there is a loss of power to the RTIS, it is designed to fail in a trip initiating state.

NRC Request (9)*—Describe the applicability of the plant Technical Specifications to multiplexer operability.*

Revised ***Response (9)***—Multiplexers are not used. Safety-related data communication is performed as an integral function of the SSLC systems. *The applicability of the plant Technical Specifications to the ~~four-division multiplexer~~* SSLC systems *operability will be a section in the specifications that will include limiting condition for operation, and surveillance requirements.*

The limiting condition is expected to be similar to that for a loss of a divisional electrical power supply.

NRC Request (10)*—Describe the hardware architecture of all multiplexer units.*

Revised ***Response (10)***—Multiplexers are not used. Safety-related data communication is performed as an integral function of the SSLC systems. ~~*The multiplexer units are of two types:*~~

~~*(1) Remote Multiplexing Units (RMU)*~~

~~*(2) Control Room Multiplexing Units (CMU)*~~

System Configuration

For the RTIS, input and output signals are directly connected to the RTIS equipment for each protective division.

In each ELCS *protection division, ~~RMUs~~* remote DLCs (RDLCs) *are located in local plant areas to acquire sensor data and transmit it to the control room for processing. The ~~RMUs~~ RDLCs also receive processed signals from the control room for command of safety system actuators.~~ CMUs are located in the control room to transmit and receive data for the logic processing units of the safety protection system (RPS and ESF). Response time constraints may dictate RPS outputs be hardwired (not multiplexed) to the load drivers.~~*

~~*All*~~ RDLC *interconnections are fiber optic data links.~~ Within each division, the system uses redundant links (either in a hot standby configuration or a bi-directional, reconfigurable arrangement) for greater reliability.~~*

The safety-related ~~multiplexing systems~~ equipment implementing the ECFs *in each division are separated and independent.*

ELCS *Hardware Configuration*

(1) ~~RMU~~ RDLC

*(a) Microprocessor-based, ~~bus-oriented architecture with control program in ROM (i.e., firmware)~~*programmable controller with control program stored in non-volatile memory*.*

(b) Modular design: Plug-in modules or circuit boards with distinct functions on separate modules ~~(CPU, memory, I/O)~~. Redundant low voltage power supplies are used for greater reliability.

(c) *Input modules acquire safety-related analog and digital data from process transmitters and equipment status contact closures, respectively. Analog input modules perform signal conditioning and A/D conversion. Digital input modules perform signal conditioning (filtering, voltage level conversion).*

(d) *Output modules transmit processed control signals to equipment actuator circuits (output signals may be contact closures or voltage levels to drive relays or solid-state load drivers).*

(e) ~~*Communications interface modules format and transmit input signals as serial multiplexed words via fiber optic data links from local areas to the control room multiplexing units. These modules also receive processed signals from the control room and demultiplex and prepare output signals for interfacing to actuators.*~~ Section 7.9S explains the methods used to communicate data between all DLCs.

(f) ~~*CPU and memory*~~ Controller *modules coordinate I/O and communication functions and perform peripheral tasks such as self-test and calibration.*

(g) ~~*Front panel interface (isolated from safety-critical signal path) permits*~~ A maintenance and test panel (MTP) is provided for each ELCS protective division. The MTP provides the interfaces for *technician access to calibration and diagnostic functions.*

~~*(2) CMU*~~

~~*(a) Same as RMU.*~~

~~*(b) Same as RMU.*~~

~~*(c) Input modules: None.*~~

~~*(d) Output modules: None.*~~

~~*(e) Communications interface modules acquire serial data from control room logic processing units. The data is formatted and inserted via a fiber optic interface into the multiplexed data stream out to the RMUs. The modules also receive multiplexed serial data from the RMUs, demultiplex the data, and transmit it to the control room logic processing units via an optical serial link.*~~

~~*(f) Same as RMU.*~~

~~*(g) Same as RMU.*~~

[The development of the ~~***essential multiplexing***~~ **SSLC systems shall assure that the ECFs are implemented** ~~***as a***~~ **using a** ***deterministic,*** ~~***dual redundant, fiber optic***~~

~~*ring structure*~~ design. ~~*shall follow the Fiber Distributed Data Interface (FDDI) protocol as described in the following American National Standards Institute (ANSI) reference documents:*~~

~~*(a) ANSI X3.166, "Fiber Distribution Data Interface (FDDI) - Physical Layer Medium Dependent (PMD)."*~~

~~*(b) ANSI X3.148,"Fiber Distributed Data Interface (FDDI) - Token Ring Physical Layer Protocol (PHY)."*~~

~~*(c) ANSI X3.139, "Fiber Distributed Data Interface (FDDI) - Token Ring Media Access Control (MAC)."*~~

~~*(d) ANSI X3T9.5/84-49, "FDDI Station Management (SMT)," Preliminary Draft.*~~

~~*For portions of the safety systems where the data throughput requirement is less than 5M bit/s, IEEE 802.5, Token Ring Access Method and Physical Layer Specifications, may be implemented as an alternative, using either coaxial, twisted pair or fiber optic cable as the transmission medium. Both networks conform to ISO 7498, Open Systems Interconnection-Basic Reference Model, as the Data Link Layer and Physical Layer. For the Data Link Layer, IEEE 802.2, Standard for Local Area Networks: Logical Link Control, shall be used with either network to define the protocols necessary to move data to the higher levels of the ISO model.*~~

~~*Communications protocols used for data transmission in other parts of the safety system and for transferring data to the non-safety systems shall also conform to ISO 7498.*~~ Section 7.9S provides information on the design of the data communication functions.

NRC Request (11)*—Describe the "firmware" architecture.*

Revised Response (11)*—The "firmware" (software contained in* ~~*ROM*~~non-volatile memory*) architecture depends upon knowledge of a specific hardware/software combination for the* ~~*multiplexer units*~~ I/O devices*. Since Tier 2 is to be independent of specific vendor's hardware and is, instead, based upon system level requirements, the exact configuration of software for the* ~~*multiplexer units*~~ I/O devices *is not specified. However, software development will follow a process consistent with the safety-related nature of the* ~~*multiplexing system*~~ ELCS, including their ECFs. RTIS is not within the scope of this response because input and output signals are directly connected to the RTIS equipment for each protective division.

The software must also support the following characteristics of the ~~*multiplexing system*~~ ELCS*:*

(1) The ~~*multiplexing system is a*~~ ELCS ECFs are implemented as *real-time control application*s *configured as* ~~*a*~~ point to point, unidirectional~~*, fiber optic local area network*~~ data links*.*

(2) *Because time response for some functions is critical to safety, system timing must be deterministic and not event-driven. ~~A typical industry standard communications protocol that is likely to be used is FDDI (Fiber Distributed Data Interface), a token-passing, counterrotating ring structure with data rates to 100M bit/s. Hardware communications interfaces to this protocol are available, thus reducing the need for special software development.~~*

(3) *The safety-critical system functions are analog and digital data acquisition, signal formatting, signal transmission, ~~demultiplexing,~~ and control signal outputs to actuators. Peripheral functions are self-~~test~~diagnostic features, periodic testing and system calibration~~ (e.g., adjustment of A/D converters)~~.*

(4) *During system initialization or shutdown and after loss of power, control outputs to actuators must fail to a safe state (fail safe or fail-as-is, as appropriate for the affected safety system). System restart shall not cause inadvertent trip or initiation of safety- related equipment (i.e., system output shall depend only on sensed plant inputs).*

(5) *The system must be fault-tolerant to support the single-failure criterion. Multi-division duplication of the system will provide this feature~~; however, within each division, the system will also be redundant for high availability. Thus, the software must perform failure detection and automatic switchover or reconfiguration in case of failure of one multiplexer channel~~.*

High quality software is the most critical aspect of microprocessor-based designs for safety systems. The software must be of easily proven reliability so as not to degrade the reliability and availability of the overall system. When installed as "firmware", the software should become, in effect, another high quality hardware component of the control equipment~~, especially, since the program in ROM is protected from being changed by external sources~~.

Software development will, in general, follow Regulatory Guide 1.152, which endorses ANSI/IEEE ANS-7-4.3.2. These documents emphasize an orderly, structured, development approach and the use of independent verification and validation to provide traceable confirmation of the design. Validation must verify a predictable and safe response to abnormal as well as normal test cases. A software-based design must also support the testability, calibration and bypass requirements of IEEE-~~279~~603.

To meet the above requirements, the software will be developed as a structured set of simple modules. Each module will perform a prescribed task that can be independently verified and tested. ~~Modules shall have one entry and one exit point.~~ The software requirements specification and design specification will define structures of external files used and interfaces with other programs. ~~In place of a formal operating system, an "executive" control program or real-time kernel will monitor, schedule, and coordinate the linking and execution of the modules.~~ The integration of the modules into the control program will be another activity to be independently verified and validated.

The overall program structure will be a hierarchy of tasks. Separate modules will be created for safety- critical tasks, calibration functions, and self-test functions, with self-test running in the background at the lowest priority. Highest priority functions will always run to completion. The use of interrupts will be minimized to prevent interference with scheduled tasks.

On detection of communication *faults, retry ~~or rollback to the last known correct state~~ will be permitted within system time constraints. If the fault is permanent~~ and potentially unsafe~~, the ~~system~~* module *shall ~~recover (or~~ fail~~)~~ to a ~~safe~~* predefined *state and the operator shall be alerted. ~~The redundant multiplexing channels shall be repairable online if one channel fails.All processor memory not used for or by the operational program shall be initialized to a pattern that will cause the system to revert to a safe state if executed.~~* System level diagnostics verify memory is not changed after initial loading.

The software shall permit online calibration and testing ~~with the outputs to the safety systems bypassed~~ consistent with the requirements of the Technical Specifications*.*

The software design shall prevent unauthorized access or modification.

Software development to achieve program operation as described above and to document and verify this operation shall conform to the following standards:

(1) [IEEE-828, "IEEE Standard for Software Configuration Management Plans"

(2) IEEE-829, "IEEE Standard for Software Test Documentation"

(3) IEEE-830, "IEEE Standard for Software Requirements Specifications"

(4) IEEE-1012, "IEEE Standard for Software Verification and Validation Plans"

(5) IEEE-1042, IEEE Guide to Software Configuration Management] *

NRC Request (12)*—Provide an explicit discussion of how the systems conform to the provisions of IEEE-279, Section 4.17.*

Response (12)*—*Also reference IEEE-603 Sections 5.1, 6.2, and 7.2. *The ~~multiplexing system~~* ECFs *for safety systems ~~only acquire~~* support the acquisition of *data from plant sensors (pressure, level, flow, etc.) and equipment status contact closures (open, close, start, stop, etc.) that provide automatic trip or initiation functions for RPS and ESF equipment.*

*Manual initiation inputs for protective action*s such as reactor scram, *are implemented by direct, hardwired or optical connections to the safety system logic*. Manual initiation inputs for other protective actions *(e.g., ECCS, containment isolation*, except for MSIV

* *See Sections 7A.1(2) and 7A.1(1).*

isolation) depend on the ECFs for communication to the safety system logic. *Initiation outputs for ECCS and isolation functions (except MSIV) are ~~multiplexed~~* communicated *to the actuators* using the ECFs. *Manual scram (reactor trip) is provided by breaking the power source to the scram pilot valve solenoids external to the ~~multiplexing system~~* equipment implementing the ECFs *and safety system logic. Manual reactor trip and manual MSIV closure in each division are available even with ~~multiplexing system~~ failure* of the ECFs*, since these outputs are not ~~multiplexed~~* communicated *to the actuators* via the ECFs*.*

However, because the ~~multiplexing system~~ design is fault tolerant (replicated in four divisions and redundant within each division) [see the responses to Requests (4), (10), and (11)], a single failure will not degrade data communications in any division.

Therefore, the requirements of IEEE-279, Section 4.17 (IEEE-603 Section 5.1)*, are satisfied, since a single failure will not prevent initiation of protective action by manual or automatic means.*

The last sentence of Section 4.17 states that "manual initiation should depend upon the operation of a minimum of equipment". The first paragraph has shown that manual initiation of *reactor trip and MSIV ~~initiation~~* isolation *do not depend at all on the ~~multiplexing system~~* ECFs. ~~m~~Manual initiation of *ECCS ~~initiation~~ and isolation ~~initiation~~ other than MSIV do ~~not~~ depend on ~~multiplexing~~* ECFs *for sending inputs to the logic*, but can tolerate the single failure of one division of ECFs*. ~~and~~* They *depend on the operation of only one channel of ~~multiplexing~~* ECFs *in each division to send outputs to actuators.*

NRC Request (13)*—Provide an explicit discussion of how the systems conform to IEEE 279, Paragraph 4.7.2, as supplemented by Regulatory Guide 1.75 and IEEE 384.*

Response (13)*—The safety-related ~~multiplexing system~~* ECFs*, which ~~is~~* are *part of the protection system, ~~has~~* have *no direct interaction with the control systems. Sensor and equipment status data are ~~multiplexed~~* communicated *only to protection system logic. However, ~~two~~ signals are sent from the protection system logic to ~~the Recirculation Flow Control System: Reactor Water Level 2 Trip and Recirculation Pump Trip~~* non-safety systems*. The signals are transmitted via fiber optic data links~~, which are not part of the multiplexing system. An isolating buffer (gateway) transfers these signals to the non-safety-related network of the control systems.~~* or through qualified isolation devices.

Fiber optic transmission lines are not subject to credible electrical faults such as short-circuit loading, hot shorts, grounds or application of high AC or DC voltages. Adjacent cables are not subject to induced fault currents or to being shorted together. The effects of cable damage are restricted to signal loss or data corruption at the receiving equipment. Cables and control equipment of different systems or assigned to different divisions are kept separated only to prevent simultaneous physical damage.

Thus, the ~~multiplexing system~~ SSLC systems ECFs design *conforms to IEEE-279, paragraph 4.7.2* (IEEE-603 paragraph 5.6.3.1(2))*, in that no credible failure at the*

output of an isolation device can "prevent the protection system ~~channel~~ from meeting minimum performance requirements specified in the design bases."

To meet the requirements of IEEE-384 and Regulatory Guide 1.75, the protective covering of the fiber optic cables are flame retardant. The cables are passed through physical, safety class barriers, where necessary, for separation of Class 1E circuits and equipment from other Class 1E equipment or from non-Class 1E equipment. The fiber optic ~~multiplexing network is~~ data communication paths are *independent in each protection division~~ and does not transmit or receive data between divisions~~.* Limited data communication does occur between divisions, for example, to provide signals needed for 2-out-of-4 voting logic. However, dedicated fiber optic cables are used for this purpose, thereby providing electrical isolation and preserving divisional independence. *However, the ~~multiplexing~~ equipment* implementing the ECFs *is* otherwise *kept physically separate to minimize the effects of design basis events.*

NRC Request (14)*—Provide confirmation that system level failures of any multiplexer system detected by automated diagnostic techniques are indicated to the operators consistent with Regulatory Guide 1.47. (i.e., bypass and inoperable status indication).*

Revised ***Response (14)***—Multiplexers are not used, and there is no multiplexer system. Safety-related data communication is performed as an integral function of the SSLC systems. *Each safety-related ~~multiplexing system~~* SSLC system *contains online self-diagnostics ~~implemented in software and hardware~~ that will ~~continuously~~ monitor system performance*, including its associated ECFs. *~~Within each control station~~*As an example, for each ELCS controller*, the following typical parameters are monitored: (1) status of the CPU, (2) ~~parity checks~~*Cyclic Redundancy Checks (CRC)*, (3) ~~data plausibility checks~~*communication keep-alive signal*, (4) watchdog timer status, (5) ~~voltage levels in control unit circuitry~~*power supply status*, (6) memory ~~(RAM and ROM)~~ checks, and (7) data range and bounds checks. ~~Hardware is provided prior to transmission and following reception to detect transmission errors at the Remote Multiplexing Units and the Control Room Multiplexing Units.~~ Self~~-test~~*diagnostics *will indicate faults to the module board replacement level.*

~~Each multiplexing system has~~ The RDLC ECFs are implemented with *dual* communication *channels for fault tolerance~~ and is provided with automatic reconfiguration and restart capability~~. A detected fault is automatically annunciated to the operator~~ at both the system and individual control station level. If one transmission loop is completely out of service, that will also be annunciated~~. Total shutdown of a*n *~~multiplexing system~~* RDLC ECF *is indicated by a separate alarm~~; however, individual control stations are repairable online without taking the entire system down~~.*

The above actions indicate conformance to Regulation Guide 1.47, Section C.1 (Automatic system level indication of bypass or deliberately induced inoperability).

~~After repair, the system automatically re-initializes to normal status when power is restored to any unit and automatically resets any alarms.~~ Power loss to any control station is separately monitored and annunciated to aid in troubleshooting and to alert the operator when power is ~~deliberately~~ removed from a unit when being serviced.

Power loss will cause the fault or out-of-service alarms described previously to activate. This indicates conformance to Regulation Guide 1.47, Section C.2 [Automatic activation of indicating system of C.1 when auxiliary or supporting system (in this case, power source) is bypassed or deliberately rendered inoperable].

Bypassed or inoperable status of any one ~~multiplexing system~~ division of ECFs *can not render inoperable any redundant portion of the protection system. Each ~~multiplexing system~~* division of ECFs *is independent ~~in each division~~* of ECFs in the other divisions*. Inoperable status in one division will cause the appropriate safe-state trips in that division, but the other divisions will continue to operate normally. Faults in another division simultaneously will indicate according to the previous discussion. The resulting safe-state trips will result in the required protective action. Thus, the requirements of Regulation Guide 1.47, Section C.3, are satisfied.*

During periodic surveillance, the system-level out-of-service indicators can be tested manually. This satisfies the requirement of Regulation Guide 1.47, Section C.4.

NRC Request (15)*—Provide an explicit discussion of the susceptibility of the multiplexer systems to electromagnetic interference.*

Revised ***Response (15)***—Multiplexers are not used, and there is no multiplexer system. Safety-related data communication is performed as an integral function of the SSLC systems. ~~*Each*~~The ~~*control station of the multiplexer system either in the control room or in local areas is electrically powered and contains solid-state logic and, therefore, is potentially susceptible to the effects of EMI. However, the effects on the overall network are reduced because of the dual, fiber optic, data transmission network that is used between stations*~~ELCS equipment is contained in EMI resistant enclosures. Proper grounding and shielding practices are used. The lack of susceptibility of ELCS equipment is verified during qualification testing. Fiber optics are used to communicate with equipment external to the cabinet*. Fiber optics are not subject to induced electrical currents, eliminate ground loops, and also do not radiate electrical noise. Thus, the isolated and distributed nature of the system, which is also replicated in four divisions, tends to reduce EMI effects.*

Response (4) indicates several common techniques (shielding, grounding, etc.) used to minimize EMI in the electrical control circuitry. Proper physical placement, especially for the ~~Remote Multiplexing Units~~ I/O devices*, is essential to eliminate interference from high current or high voltage switching devices.*

~~*Data checking software*~~ Self-diagnostics *at the ~~RMUs~~* controllers *~~and in the control room at the Control Room Multiplexing Units~~ monitor~~s~~ data transmission to ensure that faults do not propagate into the safety protection logic. Bad data transmission will cause a system alarm~~ and, possibly, a system shutdown if the fault does not clear within defined time constraints~~.*

Response (4) also discusses various tests that the system will undergo to demonstrate immunity to EMI.

7A.3 Electrical Isolators

STD DEP T1 3.4-1

STP DEP 1.8-1

NRC Request (1)*—For each type of device used to accomplish electrical isolation, provide a description of the testing to be performed to demonstrate that the device is acceptable for its application(s). Describe the test configuration and how the maximum credible faults applied to the devices will be included in the test instructions.*

Revised ***Response (1)****—This response is limited to fiber optic data links, which are the only type of isolation device used for electrical isolation of logic level and analog signals between protection divisions and from protection divisions to non-safety-related equipment.*

Testing is of two types:

(1) Optical characteristics

(2) Signal transmission capability

Optical characteristics are checked by an optical power meter and a hand-held light source to determine the optical loss from one end of the fiber optic cable to the other. In an operational system, an optical time domain reflectometer measures and displays optical loss along any continuous optical fiber path. Any abrupt disruption in the optical path such as a splice or connector is seen as a blip on the display. This technique is especially useful for troubleshooting long runs of cable such as ~~*in the multiplexing system*~~ those used to implement the DCFs*. Cable terminations are visually inspected under magnification to determine if cracks and flaws have appeared in the optical fiber surfaces within the connector.*

Transmission characteristics are ~~*tested by bit generation. This test method determines bit error rate by generating a random stream of bits at the transmitter and verifying them at the receiver to determine the reliability of the fiber optics. Data rate is set at the maximum throughput required by the system. Proper transfer of analog signals is determined by analog-to-digital conversion of test signals at the transmitting end, and monitoring of the digital-to-analog conversion at the receiving end for linearity over the full scale range. Frequency of the test signals is set at the maximum required by the system.*~~ monitored in the system by the self diagnostics.

Maximum credible electrical faults applied at the outputs of isolation devices do not apply to fiber optic systems. The maximum credible fault is cable breakage causing loss of signal transmission. Faults cannot cause propagation of electrical voltages and currents into other electrical circuitry at the transmitting or receiving ends. Conversely, electrical faults originating at the input to the fiber optic transmitter can only damage the local circuitry and cause loss or corruption of data transmission; damaging voltages and currents will not propagate to the receiving end.

NRC Request (5)*—Provide a commitment that the isolation devices will comply with all environmental qualification and seismic qualification requirements.*

Revised ***Response (5)****—Fiber optic isolation devices are expected to have less difficulty than previous isolation devices in complying with all qualification requirements due to their small size, low mass, and simple electronic interfaces. The basic materials and components, except for the fiber optic cable itself, are the same as those used in existing, qualified isolation devices.*

A major advantage of fiber optics is that signals can be transmitted long distances and around curves through the isolating medium; thus, the physical, safety-class barrier required for separation of Class 1E devices may be provided by just the cable length if the protective covering and any fill materials of the cable are made properly flame-retardant. For short distances, the fiber optic cable can be fed through a standard safety class structure.

~~*Details of the type of cable, transmitter, and receiver combinations that will provide optimum compliance with qualification requirements must await the guidance to be developed by the NRC staff/EG&G studies (see Section 4).*~~

NRC Request (6)*–Describe the measures taken to protect the safety systems from electrical interference (i.e., electrostatic coupling, EMI, common mode, and crosstalk) that may be generated.*

Revised ***Response (6)****–Previous responses have described the specific measures that are employed to minimize electrical interference. Fiber optic isolating devices do not require metallic shielding and are immune from electrostatic coupling, EMI, common-mode effects, and crosstalk along their cable length; they also do not radiate electrical interference. The electrical circuitry used to transmit and receive the optical signals is susceptible to electrical interference in the same manner as other circuitry, but the isolating effects of the fiber optic cable will reduce propagation of interference. The local effects of EMI and other electrical noise are handled by standard filtering, shielding, and grounding techniques.*

See Reponse (4) of Section 7A.2 for tests that will be performed to verify the effectiveness of EMI preventive measures for safety systems. Additional tests to determine the susceptibility of safety system control equipment to electrostatic discharges shall be established using the test procedures included in IEC Publication ~~*801-2, Electromagnetic Compatibility for Industrial-Process Measurement and Control Equipment, Part 2: Electrostatic Discharge Requirements*~~ 61000-4-2, Electromagnetic Compatibility (EMC) - Part 4-2: Testing and Measurement Techniques - Electrostatic Discharge Immunity Test*. The test procedures of* ~~*Paragraph 8 of this document shall be performed up to and including Severity Level 4, as defined in the document*~~ Part 4-2 will be used to qualify electrical and electronic equipment subjected to static electricity discharges*.*

NRC Request (7)*—Provide information to verify that the Class 1E isolation devices are powered from a Class 1E power source(s).*

Revised ***Response (7)*** ~~*When using fiber optic devices as Class 1E isolation devices, only the input side of the transmitting device and output side of the receiving device use electrical power. The low voltage power supplies for these devices use the same power source as the logic that drives the isolating device. For ABWR safety systems, this power is:*~~

~~*(1) Divisional 120V Vital AC (UPS) For Reactor Protection System (RPS) logic and Main Steam Isolation Valve (MSIV) logic.*~~

~~*(2) 125V Plant DC Power Supply For ECCS logic and Leak Detection and Isolation System (LDS) logic.*~~

Fiber optic cable is used for Class 1E isolation and does not use any electrical power to accomplish that function.~~*]*~~*

7A.7 Revised Responses to Subsections 7A.5 & 7A.6; Computer Hardware and Software

STD DEP T1 3.4-1

STD DEP 16.3-100

Items 7A.5(3) and 7A.6(2)

The ABWR design of the Reactor Protection System utilizes ~~microprocessor~~ configurable logic technology for logic decisions based on analog input from various sensors.~~ This philosophy is much the same as that of GESSAR II and the Clinton BWR, except in those designs, solid-state CMOS accepted digital signals from analog trip modules (ATM). In the ABWR design, the microprocessors perform the functions of both the CMOS and the ATM.~~

The~~ important distinction is that the~~ ABWR uses a modern form of a digital ~~computer~~ device~~ (i.e., microprocessors)~~ for the same reasons relays and solid-state devices were used in earlier designs (i.e., making simple logic decisions); not for making complex calculations for which protective action is dependent.

Items 7A.5(4) and 7A.6(4)

The guidelines of NUREG-O493 have been used to perform analysis of several possible different configurations of the Safety System Logic and Control (SSLC) network. Analyses have been performed at the system design level to assure adequate defense-in-depth and/or diversity principles were incorporated at acceptable cost. It is recognized that such requirements are in addition to positions on safety-related protection systems (such as the single failure criterion) taken previously in other Regulatory Guides.

* *See Section 7.A.1(1).*

In order to reduce plant construction costs and simplify maintenance operation, the ABWR protection systems are designed with a partially *"shared sensors" concept. The ~~SSLC~~* RTIS *is the central processing mechanism ~~and~~* that *produces logic decisions for both RPS and* MSIV isolation functions. The ELCS is the central processing mechanism that produces logic decisions for all *ESF safety system functions. Redundancy and "single failure" requirements are enhanced by a full four-division modular design using two-out-of-four voting logic on inputs derived from LOCA signals which consist of diverse parameters (i.e., reactor low level and high drywell pressure). Many additional signals are provided, in groups of four or more, to initiate RPS scram (Table 7.2-2).*

With its inherent advantages, it is also recognized that such design integration (i.e., shared sensors) theoretically escalates the effects of potential common-mode failures (CMF). Therefore, the architecture of the *SSLC System*s *~~architecture~~ is designed to provide maximum separation of system functions by using separate digital trip ~~modules~~* functions *(~~DTMs~~* DTFs*) and trip logic ~~units~~*functions *(~~TLUs~~*TLFs*) for RPS/MSIV logic processing and for LDS/ECCS logic processing within each of the four essential power divisions. Thus, setpoint comparisons within individual ~~DTMs~~* DTFs *are associated with logically separate initiation tasks.*

Sensor signals are sent to each ~~DTM~~ DTF *on separate or redundant data links such that distribution of ~~DTM~~* DTF *functions results in minimum interdependence between echelons of defense. For reactor level sensing, the RPS scram function utilizes narrow-range transmitters while the ECCS functions utilize the wide-range transmitters. The diverse high drywell signals are shared within the two-out- of-four voting logic. In addition, all automatic protective functions are backed up by manual controls. ~~These concepts are illustrated in Figure 7A-1.~~*

Items 6(1) and 6(3)

IEEE-603 has been reviewed, as has Regulatory Guide 1.153 which endorses IEEE-603.

The ~~microprocessor~~ hardware and software which make up the Safety System Logic and Control (SSLC) systems *is designed to make logic decisions which automatically initiate safety actions based on input from instrument monitored parameters for several nuclear safety systems. ~~As shown in Figure 7.1-2 of Section 7.1 and Figure 7A-1, the SSLC is not a nuclear safety system of itself, but is a means by which the nuclear safety systems accomplish their functions.~~ In that sense, the SSLC ~~is a component that~~* systems *integrate~~s~~ the nuclear safety systems.*

Most positions stated in IEEE-603 (as endorsed by RG 1.153) pertain to the nuclear safety systems, and are similar to those of IEEE-279, which are addressed for each system in the analysis sections of Chapter 7. Safety system design bases are described for all I&C systems in Section 7.1, beginning at Subsection 7.1.2.2. ~~Setpoints and margin may be found in Chapter 16~~ The methods for calculating setpoints and margins are described in Chapter 16*.*

The safety system criteria in Section 5 and the functional and design requirements in Section 6 *of IEEE-603 are not compromised by the introduction of the SSLC. All positions regarding single-failure, completion of protective actions, etc., are designed into the protection systems. All SSLC components associated with the protection systems are Class 1E and are qualified to the same standards as the protection systems.*

Independence of the four SSLC electrical divisions is retained by using fiber-optic cable for cross- divisional communication such as the two-out-of-four voting logic. ~~*Capability for test and calibration is greatly enhanced by the SSLC's self-test subsystem (STS) as described in Subsection 7.1.2.1.6.*~~

In summary, the hardware and software functions ~~*of the microprocessors*~~ *used in the SSLC comply with applicable portions of IEEE-603 and Regulatory Guide 1.153 (i.e., quality, qualification, testability, independence). The remaining portions, which apply to the nuclear safety systems, are not compromised by the SSLC design, but are in fact enhanced by self-test.]*[*]

* See Section 7A.1(1).

Table 7A-1 List of Equipment Interface with ~~*Essential MUX*~~ ECFs Signals (Typical)

Device	Div	Description
~~*U41-D107*~~	~~*3*~~	~~*FCS ROOM (A) HVH*~~
~~*U41-D108*~~	~~*2*~~	~~*FCS ROOM (B) HVH*~~

Figure 7A-1 ~~*Safety System Logic and Control (SSLC)*~~ Not Used (See Figure 7.9S-1)

7B Implementation Requirements for Hardware/Software Development

The information in this appendix of the reference ABWR DCD, including all subsections, is incorporated by reference with no departures or supplements.

7C Defense Against Common-Mode Failure in Safety-Related, Software-Based I&C Systems

The information in this appendix of the reference ABWR DCD, including all subsections and figures, is incorporated by reference with the following departures.

STD DEP T1 3.4-1 (Figure 7C-1)

STD DEP Admin

7C.1 Introduction

STD DEP T1 3.4-1

STD DEP Admin

As described in Chapter 7 ~~and Appendix 7A,~~ the ABWR Safety System Logic and Control (SSLC) and ~~Essential Multiplexing System (EMS)~~ Essential Communication Function (ECF) *designs ue programmable digital equipment to implement operating functions of the interfacing safety systems. A controlled process for software development and implementation is employed to ensure that the highest quality software is produced. The development process for safety-related* configurable logic devices, and for safety-related *software and its integration into read-only memory (ROM) as firmware includes a formal verification and validation (V&V) program, which is described in ~~Appendices 7A and~~* Appendix 7B*. The V&V program, under control of the Software Management Plan, is applied to software that is developed for maximum reliability and efficiency, using a set of design techniques directed towards generating the simplest possible code to be used as firmware in dedicated, real-time microcontrollers*

Despite the use of simple, reliable software; formal V&V; and built-in self-diagnostics, there is a concern that software design faults or other initiating events common to redundant, multi-divisional logic channels could disable significant portions of the plant's automatic standby safety functions (the reactor protection system and engineered safety features systems) at the moment when these functions are needed to mitigate an accident. Mitigation of these common mode failures, as described in the following sections, is provided by the following diverse features:

(a) Manual scram and isolation by the operator in the main control room in response to diverse parameter indications.

(b) Core makeup water capability from the diverse feedwater, CRD, and condensate systems.

(c) Availability of manual high pressure injection capability.

(d) Long term shutdown capability provided in a conventionally hardwired, 2-division, ~~analog~~ remote shutdown system using a technology diverse from other safety systems*; local displays of process variables in RSS*

are continuously powered and so are available for monitoring at any time.

7C.2 [Design Techniques for Optimizing ABWR Safety-Related Hardware and Software

STD DEP T1 3.4-1

(c) Microprocessors with minimal instruction sets and a simple operating system and configurable logic devices with minimal instruction sets *are used. The "lost" computing power is not needed and the limited instructions minimize inadvertent programming and operational errors. This aids in verification and validation and further enhances reliability.*

7C.3 Defense Against Common-Mode Failure

STD DEP T1 3.4-1

A strong V&V program can reduce the probability of common mode failure to a very low level because the simple modules used in each division, although identical in some cases, can be thoroughly tested during the validation process. In addition to software V&V, however, SSLC contains several system level and functional level defenses against common mode failure, as follows:

(1) System Level Defenses Against Common Mode Failure

(a) Operational defenses

(i) Asynchronous operation of multiple protection divisions; timing signals are not exchanged among divisions

(ii) Automatic error checking on all ~~multiplexed~~ data *transmission paths. Only the last good data is used for logic processing unless a permanent fault is detected, thereby causing the channel to trip and alarm.*

The functional program logic in the SSLC controllers also provides protection against common mode failures, as follows:

(1) Functional Defenses Against Common Mode Software Failure

(c) ~~Multiplexing and other data~~ Data *transmission functions ~~use standard, open protocols that are verified to industry standards and~~ are ~~also~~ qualified to Class 1E standards*

7C.4 Common Mode Failure Analysis

STD DEP T1 3.4-1

JUNE, 1993

As of the week of June 7, 1993, the staff indicated that, with the addition of the hardwired HPCF manual control in the MCR, the issue of I&C diversity would be closed, pending the staff's final review of the results of the analyses that were re-done to incorporate manual HPCF initiation. Within the U.S. licensing material, manual HPCF Loop C initiation will be presented as a manual switch hardwired to a programmable logic controller (PLC) device that is independent of Safety System Logic and Control (SSLC) and the ~~Essential Multiplexing System (EMS)~~ Essential Communication Function (ECF)*. SSLC and ~~EMS~~* ECF *will continue to provide the automatic software-based initiation logic for HPCF Loop C [see reference 7C-6(7)].*

The SSLC design also uses hardwired control switches to perform manual system start of the other systems in ECCS. However, these switches are hardwired only from the operator's control station to the ~~microprocessor~~ logic in SSLC, where ~~EMS~~ ECF *then provides the transmission path for control signals from SSLC to the actuated devices. Control switch signals for individual control of pumps and valves are ~~multiplexed~~* transmitted *from the operator's control station to SSLC and then through ~~EMS~~* ECF *as stated above.*

7C.5 [Details of Final Implementation of Diversity in ABWR Protection System

STD DEP T1 3.4-1

To maintain protection system defense-in-depth in the presence of a postulated worst-case event (i.e., undetected, 4-division common mode failure of all communications or logic processing functions in conjunction with a large break LOCA), diversity is provided in the form of hardwired backup of reactor trip, diverse display of important process parameters, defense-in-depth arrangement of equipment, and other equipment diversity as outlined below (many of these features were included in the original protection system design; refer to Figure 7C-1 for details of how those additional diverse features, added as a result of the CMF analyses discussed in the previous section, have been implemented). Note that diverse equipment can be in the form of digital or non-digital devices as long as these devices are not subject to the same common mode failure as the primary protection system components:

(2) Defense-in-depth configuration:

(a) Fail-safe RPS and fail-as-is ESF in separate processing channels

(b) Control systems are independent of RPS and ESF in separate ~~triplicated processing network~~ communication functions *using diverse hardware and software from the ~~Essential Multiplexing System~~* Essential Communication Function (ECF) *network*

(3) Equipment diversity

(d) HPCF manual start in loop C (Division III) is implemented in equipment that is diverse from the automatic start function. All interconnections are hardwired and control and interlock logic is provided in the form of either

discrete logic gates or programmable logic that is diverse from the automatic start logic. The signal path of the manual logic is independent from that of the automatic logic up to the actuated device drivers (e.g., motor control centers or switchgear). The manual start function is not implemented in the automatic logic~~; however, the logic reset switch is common to both the automatic and manual logic~~. In addition to the manual start function, which performs all necessary control actions as a substitute for automatic start, other supporting hardwired functions are provided in loop C as follows:

(v) Remote shutdown system (~~analog~~ diverse, hardwired) provides shutdown cooling functions and continuous local display of monitored process parameters.

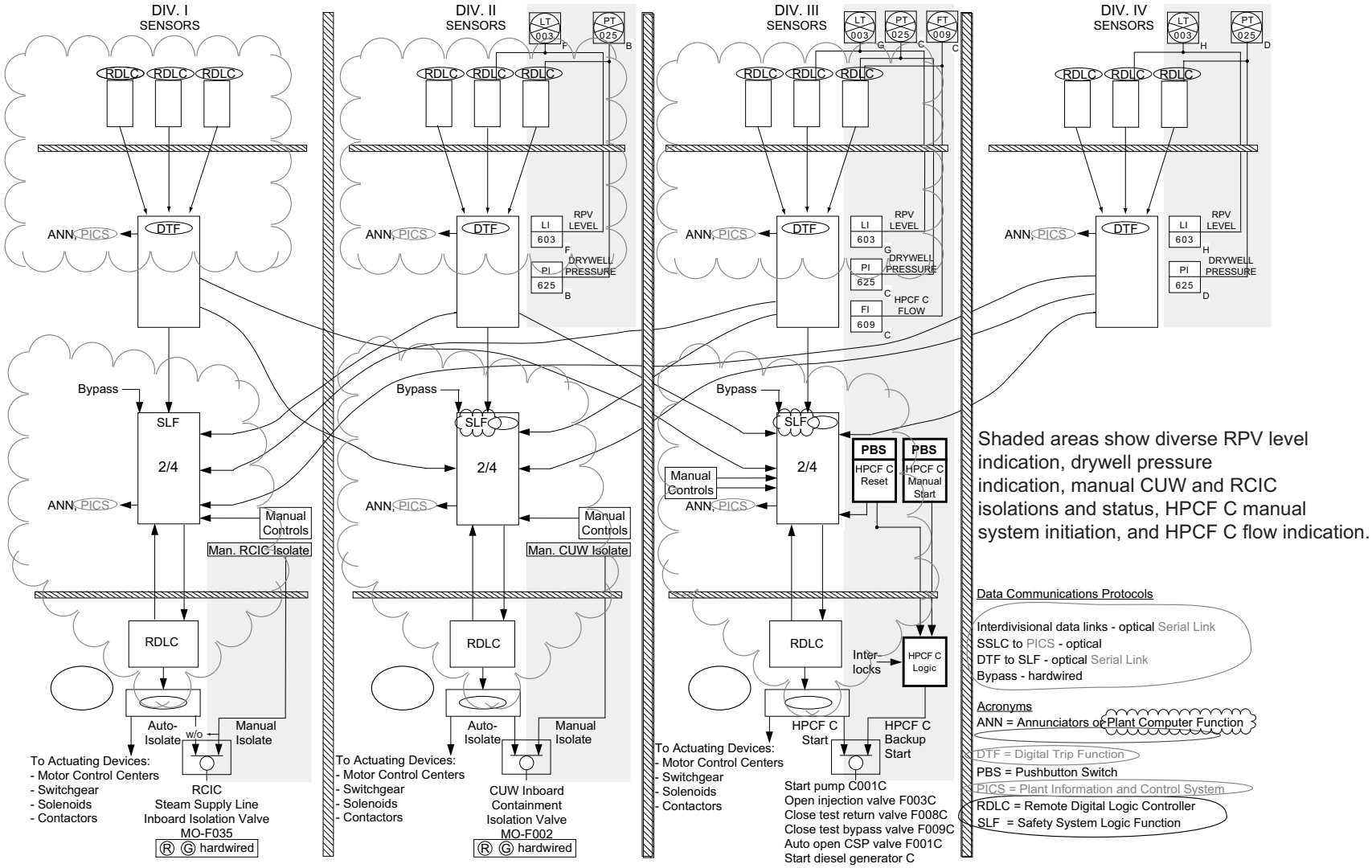

Figure 7C-1 Implementation of Additional Diversity in SSLC to Mitigate Effects of Common-Mode Failures

7DS Digital Instrumentation and Control Design Verification for Safety-Related Systems

The purpose of this appendix is to consolidate information regarding key design features of the safety-related platforms, and to facilitate mapping of applicable Design Acceptance Criteria (DAC), and Inspections, Tests, Analyses, and Acceptance Criteria (ITAAC) against that information. This appendix does not include any changes to the design as described in other portions of the COLA. This consolidated information is collected from various parts of the COLA (Tier 1 and Tier 2 of the COLA FSAR), the referenced ABWR Design Control Document (DCD), and various applicable technical and topical reports.

The scope of this appendix is limited to safety-related platforms selected to implement the design and functionality of the Safety System Logic and Control (SSLC) for the ABWR. The Field Programmable Gate Array (FPGA)-based platforms are used for the Reactor Trip and Isolation System (RTIS) and the Neutron Monitoring System (NMS). The microprocessor-based platform is used for the Engineered Safety Features Logic and Control System (ELCS). The RTIS, NMS, and ELCS implement SSLC.

The platforms that implement the SSLC system have been designed in large part based on four essential design principles: (1) redundancy, (2) independence, (3) the need for defined determinism in data processing and communication, and (4) implementation of a diversity and defense-in-depth (D3) philosophy, as well as one subjective attribute–simplicity. The four principles and one attribute are embodied in the underlying basis of IEEE-603. The safety-related digital instrumentation and control (DI&C) platforms as described in Tier 1 Section 3.4; Tier 2 Subsections 7.1, 7.1S, 7.2, 7.3, 7.6, and 7.9S; and elsewhere in the FSAR satisfy IEEE-603 and thus the four principles plus one attribute. Conformance to IEEE-603 is explicitly described in each of the above Tier 2 sections.

Confirmation that the SSLC system platforms are implemented in accordance with the licensing basis is provided by Tier 1 ITAAC and the DAC hardware-software development process associated with Tier 1 Subsection 3.4B.

The consolidation of information in this appendix supports and clarifies the ITAAC and DAC resolution process for future use by those entities performing, reviewing, and approving the resolution. This appendix does not address conformance with all of the IEEE-603 criteria nor all of the numerous other applicable regulatory guidance, codes, and standards. It is also not intended to provide an exhaustive list of all ITAAC or DAC activities, only those that confirm the aforementioned essential design principles and subjective attribute.

The discussion in this appendix is structured to summarize the key design features of each platform to address the above. Note the following:

- The discussion identifies bracketed key design features (shown as "{" and "}^{X}" surrounding the feature or design attribute), in which ^{X} numerically denotes each bracketed design feature with one or more superscript numbers that reference the

entry in Table 7DS-1. Table 7DS-1 then cross-references the table entry to the applicable Tier 1 DAC or ITAAC that assures verification.

- Some bracketed items identify analyses to be performed and a report to be generated. While these reports are applicable to that item, they represent only an example of the many technical reports and numerous documents prepared during design development.
- Subsection 14.3.3.4.1 notes that the DI&C ITAAC related to processes and programs are the Tier 1 Section 3.4B ITAAC (Tier 1 Table 3.4 Items 7 through 15). These ITAAC are the DI&C DAC. The identification of specific Tier 1 ITAAC herein is not all inclusive. Instead, it is focused on the DAC of Tier 1, Table 3.4 and the ITAAC of Tier 1, Table 3.4 and Tier 1, Tables 2.2.5, 2.2.7, 2.4.3, and 2.7.5. Table 7DS-1 provides the cross-references of DAC/ITAAC to the DI&C key design features or attributes.
- The FPGA-based RTIS/NMS platform has inherent and distinct design differences from the microprocessor-based ELCS platform. Therefore, the discussion of each is similar but not identical. In addition, much of the noted DAC/ITAAC are applicable to both platforms. However, when DAC/ITAAC is not applicable to a platform, it is identified as such in Table 7DS-1.
- Figures 7DS-1 through 7DS-4 illustrate features of the DI&C design. These figures are derived from Tier 1 Figures 2.2.7b and 3.4b and Tier 2 Figures 7.1-2, 7.2-8 through 7.2-10, 7.9S-1, 7C1, and various Chapter 21 drawings.

7DS.1 Reactor Trip and Isolation System (RTIS) and Safety-Related Neutron Monitoring System (NMS)

7DS.1.1 Redundancy

The RTIS and safety-related NMS implementation in the FPGA platform conforms to the Single Failure Criterion (Clause 5.1) of IEEE-603. To meet this criterion, the redundancy designed into each of these systems is discussed below.

7DS.1.1.1 Reactor Trip and Isolation System

The RTIS implements the majority of the functions of the Reactor Protection System (RPS) and includes the Suppression Pool Temperature Monitor (SPTM) and the Main Steam Isolation Valve (MSIV) functions of the Leak Detection and Isolation System (LDS). {Four redundant, independent divisions of sensors provide input into the four redundant divisions of RTIS. Each division of RTIS includes modules that make up the Digital Trip Functions (DTFs).}[1, 2, 24, 26] Trip decisions from the DTFs are transmitted to each of the four redundant, independent divisions of modules that make up the Trip Logic Functions (TLFs) within RTIS. The signals are transmitted over dedicated, independent optical cables, which also provide electrical isolation. Each divisional TLF determines the trip state based on a two-out-of-four vote. Each divisional TLF sends its voted trip signal state and status information to separate and independent Output Logic Units (OLUs) within its division. The OLU distributes the automatic and manual trip outputs to the solenoid load drivers for reactor trip and MSIV closure.

To permit surveillance testing or maintenance, bypassing of any single division of sensors (i.e., those sensors whose status is part of a two-out-of-four logic) can be accomplished by means of the manually operated bypass. {This Division-of-Sensors Bypass bypasses the divisional DTF and leaves the DTF's output in a non-tripped state. The Division-of-Sensors Bypass is designed to allow only one division to be bypassed at a time. When such bypass is made, all four divisions of two-out-of-four voting logic become two-out-of-three voting logic, a credible failure can occur, and RTIS can still meet the IEEE-603 Single Failure Criterion (Clause 5.1).}[4]

Bypassing a division of trip logic (i.e., taking a logic channel out of service) can be accomplished by means of the Trip-Logic-Output Bypass. When a Trip-Logic-Output Bypass is in effect, the TLF trip output in the bypassed division is inhibited from affecting the output load drivers, maintaining that division's load drivers in an energized state. {Only one divisional TLF can be bypassed by the Trip-Logic-Output Bypass. The two-out-of-four voting logic arrangement of output load drivers for the RPS and MSIV functions effectively becomes two-out-of-three voting logic, a credible failure can occur, and RTIS can still meet the IEEE-603 Single Failure Criterion (Clause 5.1).}[4]

A high level block diagram of the RTIS is shown on Figure 7.1-2.

7DS.1.1.2 Safety-Related Neutron Monitoring System

The safety-related portion of the NMS consists of the Startup Range Neutron Monitor (SRNM), the Local Power Range Monitor (LPRM), and the Average Power Range Monitor (APRM). The Oscillation Power Range Monitor (OPRM) is a functional subsystem of the APRM.

{At low reactor power levels, the SRNM provides all monitoring of neutron flux. Ten SRNM channels are arranged into four divisions such that each of the four RPS divisions receives all of the SRNM input signals from each of the four redundant SRNM divisions. Failure of a single SRNM channel, once bypassed, will not cause a trip to the RPS. Failure of a single SRNM channel will not prevent proper operation of the remaining trip channels in performing their safety functions and satisfying the IEEE-603 Single Failure Criterion (Clause 5.1).}[20, 22, 23]

{For power range neutron flux monitoring, the LPRMs provide data to the APRM and OPRM. LPRM, APRM, and OPRM are provided in each of the four divisions. The LPRM detector sensors are divided into four redundant groups, each group providing local power range signals to its assigned divisional average power range monitor.}[20] Each LPRM detector can be individually bypassed, with a minimum required number of LPRMs in each division. {Each LPRM detector assembly contains four LPRM detectors. Each LPRM detector assembly provides one LPRM input to each of the four independent and redundant APRM and OPRM channels in the same division. LPRM detectors are mapped to divisions to ensure that each APRM and OPRM channel has a representative view of the reactor core.}[20]

{There are four redundant, independent channels of APRM, with each channel providing a trip signal to each of the four RPS divisions. Any two of the four APRM channels that indicate an abnormal condition will initiate a reactor scram through the

RPS two-out-of-four logic. The redundancy criteria are met so that in the event of a single failure under permissible APRM channel bypass conditions, a scram signal will still be generated in the RPS as required. Thus, the IEEE-603 Single Failure Criterion (Clause 5.1) is satisfied.}[20]

{There are four independent and redundant channels of OPRM. The above APRM channel redundancy condition also applies to OPRM channels. Bypassing a division of APRM bypasses the same division of OPRM. The OPRM trip outputs are separate from the APRM trips to RPS and use similar RPS two-out-of-four voting logic as the APRM, satisfying the IEEE-603 Single Failure Criterion (Clause 5.1). The arrangement and assignment of LPRMs provide core regional monitoring by redundant OPRM channels.}[20]

7DS.1.1.3 Power Supply Redundancy

{Power supply redundancy of the RTIS and the safety-related portion of NMS is provided through four redundant, Class 1E, 120 VAC power sources. The power sources provide an uninterruptible supply of electrical power, one to each division. A loss of one power supply will neither inhibit protective action nor cause a scram, satisfying the IEEE-603 Single Failure Criterion (Clause 5.1).}[3, 21, 25]

7DS.1.2 Independence

Each division of RTIS and NMS can accomplish its safety function regardless of the operability or adverse impact of other redundant divisions or other systems. For RTIS and NMS, functional, physical, electrical, and communication independence exists between redundant safety-related divisions, between each safety-related division and other divisions in other safety-related systems, and between safety-related systems and nonsafety-related systems.

Data independence is exhibited in RTIS and NMS in that only votes to trip and status information are provided across divisional boundaries. The data link information is transmitted in packets with a fixed length, fixed content, and predefined format. Failures in the communication links do not adversely affect operation of the divisions receiving malformed, incorrect, or inappropriate data messages.

7DS.1.2.1 Physical and Electrical Independence

{Each of the four divisions of safety-related NMS and RTIS are physically separated from the other redundant divisions. NMS and RTIS comply with the criteria set forth in IEEE-603, Clause 5.6, and follow the guidance of Regulatory Guide 1.75, which endorses IEEE-384.}[3, 21, 25] Class 1E circuits are identified and separated from redundant circuits and non-Class 1E circuits. Qualified electrical isolation devices are provided in the design when an interface exists between redundant Class 1E divisions and between non-Class 1E and Class 1E circuits. Independence and separation of safety-related systems are discussed in further detail in Subsection 8.3.3.6.2.

{Physical and electrical independence of the instrumentation devices of the system is provided by channel independence for sensors exposed to each process variable. Trip logic outputs are separated in the same manner as are the channels. Signals between

redundant RPS divisions are electrically and physically isolated by Class 1E isolators, including fiber optic cables.}[3] Figure 7DS-2 provides a high-level overview of the RTIS safety function communication between redundant divisions.

7DS.1.2.2 Communications Independence

For the FPGA-based systems, the signals from the instrumentation are hardwired to the RTIS and NMS channels. The modules used to construct the RTIS and NMS systems communicate using dedicated communication links internal to the division. Each communication link has its own independent communications buffer.

The communication data links to be provided to systems external to the FPGA-based system use unidirectional fiber optic communication links from each division. The communication links provide only fixed data sets to the nonsafety-related systems, provide 1E to non-1E electrical and functional isolation, and offer no possibility of data transfer from the non-safety to safety equipment during normal operation. The NMS allows non-safety calibration data to be passed only to one division of NMS when that division is out of service as described in Subsection 7DS.1.2.2.2.

The FPGA-based system includes self-diagnostic functions that continuously verify proper FPGA and communications performance, and provide outputs used to alert the operator. If a failure is detected, the division is marked as inoperable (i.e., tripped). When two divisions are in a tripped state, the two-out-of-four voting logic will cause the safety action to occur (e.g., two tripped RPS divisions will scram the reactor). Self-diagnostic functions are safety-related.

Each RTIS and safety-related NMS division has fiber optic communication links to the ELCS communication interface in the same division. The ELCS provides the information for display on the safety displays in the main control room. The links provide a qualified and isolated, point-to-point, single direction communication path to preserve independence between the originating RTIS/NMS division and ELCS.

Each RTIS and safety-related NMS division communicates data and status to the nonsafety-related Plant Information and Control System (PICS) through dedicated communication interfaces in each system's modules. {The communication interface for each division consists of unidirectional fiber optic communication links that broadcast fixed data sets from each safety division to the nonsafety-related PICS. The communication interface is designed to prevent any data transfer from the non-safety PICS to the originating safety related division. The fiber optic cable provides electrical isolation and the safety-related transmitter provides the functional isolation.}[17]

No other capabilities exist for communication with external devices. Communications information specific to RTIS and NMS are discussed briefly below in the following subsections.

7DS.1.2.2.1 Reactor Trip and Isolation System

RTIS includes the primary functions of RPS, and Main Steam Isolation Valve (MSIV) functions of the Leak Detection and Isolation (LDS) subsystem. Each system or

subsystem consists of four redundant divisions. A high level block diagram of one division of the RTIS data communication interfaces is shown in Figure 7.9S-1. Figure 7DS-1 provides a diagram of one RTIS division of trip logic.

{The RPS and MSIV functions are implemented in the four redundant divisions of RTIS. Sensor signals are hardwired to the DTF inputs for each division. Each division's DTF determines the trip status for each signal. The DTF communicates its division's trip status information to the TLF by fiber optic communication links. Because individual divisional trip determinations must be shared between divisions to support two-out-of-four voting logic for divisional trip outputs, the DTF also communicates its trip status information to the other three divisional TLFs by means of isolated fiber optic communication links. The links provide a qualified and isolated, point-to-point, single direction communication path between divisions to preserve divisional independence.}[15, 24]

{Data communicated between RTIS divisions for use in two-out-of-four voting has their own independent communication buffer in the receiving division's TLF for each set of incoming data. Only discrete (vote to trip only) information is transmitted across division boundaries in fixed format, fixed length, and pre-defined messages. This preserves data independence between divisions in accordance with IEEE-603 Clause 5.6.}[7]

The TLF in each division determines the system-level actuation of RPS and MSIV safety functions utilizing two-out-four voting logic. In each division, the TLF communicates trip status information to the OLU by unidirectional fiber optic communication links. The OLU in each division communicates with the Load Drivers that initiate the safety function. {The RPS Load Drivers are hardwired to its scram solenoid valves, and the MSIV Load Drivers are hardwired to its MSIV solenoid valves.}[24, 26]

7DS.1.2.2.2 Safety-Related Neutron Monitoring System

The safety-related NMS consists of LPRM, APRM, and SRNM subsystems, and OPRM, which is a functional subsystem of the APRM. Each subsystem consists of four redundant divisions. There is no communication between redundant divisions in the safety-related NMS. All trip voting is performed in RTIS. A high-level block diagram of one division of the NMS data communication interfaces is shown in Figure 7.9S-1.

The LPRM monitors neutron flux in the power range. {For each of the four NMS divisions, the LPRMs monitor neutron flux levels from the hardwired LPRM detector inputs.}[20] Each division has 52 LPRM detectors and LPRM modules that provide data to the APRM and OPRM in each division. {The LPRM modules in one division communicate internally with the APRM in that division over unidirectional fiber optic communication links, providing fixed data sets of LPRM information.}[15, 20]

For each of the four NMS divisions, the APRM uses the divisional LPRM detectors and a divisional core plate differential pressure input. {When an APRM division detects a trip condition, it provides a hardwired, discrete (vote to trip only) signal to all divisions of the RTIS TLF. The hardwired signals are electrically isolated.}[20]

For each of the four NMS divisions, the divisional OPRM receives local power level data from the divisional LPRMs and core flow and average power level data from the same divisional APRMs over unidirectional fiber optic communication links. {The four divisions of the OPRM trip protection algorithm independently detect thermal hydraulic instability and provide hardwired, discrete (vote to trip only) signals for the RTIS's OPRM voter logic.}[20]

The divisional SRNM monitors neutron flux while in the start-up range. {Each SRNM receives input from a hardwired detector.}[20] SRNM detectors are distributed throughout the reactor core and assigned to four divisions. {Each SRNM detects high neutron flux or a short period condition and provides a hardwired, discrete (vote to trip only) signal to all division of the RTIS TLFs for reactor trip determination.}[20]

The NMS also includes an off-line capability to transfer calibration data from PICS to NMS. When NMS is online and not bypassed, data transfer to NMS from the non-safety system is blocked by a key lock switch in each LPRM module. When calibration information is to be transferred from the nonsafety-related core monitor function of the PICS, the NMS division desired to receive the information must be bypassed by the control room operator, placed in an inoperative status, and the key lock switch on that NMS division must be enabled to request and allow the data transfer. Only a limited data set in a predefined format will be accepted by the NMS. Before the data can be used by the NMS, manual verification and acceptance of each data item at the NMS human-system interface is required. {No online data transmission from nonsafety-related systems to safety-related systems is permitted.}[17]

The Multi-channel Rod Block Monitor (MRBM) is a nonsafety-related subsystem of NMS. {The APRM in each NMS division communicates to the MRBM subsystem with unidirectional fiber optic communication links that provide fixed data sets from each safety division to the nonsafety-related MRBMs.}[15, 17]

7DS.1.3 Determinism

The response time requirement for each NMS and RTIS safety-related function is determined by the Safety Analysis. The response time must be predictable and repeatable to be considered deterministic. The response time for all NMS and RTIS safety functions is deterministic. A description of the FPGA platforms that make the NMS and RTIS response deterministic is provided below.

The FPGA-based system designs use multiple FPGAs on some modules. To enhance testability and reduce undesirable circuit behavior, the basic architecture within each FPGA is a clocked sequential circuit, with periodic synchronizing registers within the FPGAs. Each FPGA only starts processing data when data is transferred into that FPGA, and sends data to the next FPGA or module when processing is complete. Thus, the functions in a given module execute in sequence that is inherently deterministic based on the clocked sequence. The first FPGA completes its function, and then provides data to the next FPGA. When that FPGA completes its function, it provides data to the next FPGA. In addition, when all signal processing FPGAs have finished passing data to the next, the signal processing watchdog timer on the module resets and restarts timing. The watchdog timer is hardware based and is diverse from

the FPGA circuits on each module. {Failure of a signal processing FPGA to complete and pass data to the next FPGA will result in all subsequent FPGAs on that module failing to start. If this occurs in the FPGAs that implement the signal processing and thus the safety functions, the module is marked as failed, the watchdog timer times out, resulting in the tripped division, and an alarm is provided to the operator. Two tripped divisions will result in a reactor scram via the two-out-of-four voting arrangement. The watchdog timer on each module is designed to be fully testable.}[7]

Because FPGAs are arrays of logic cells and registers, each cell connected in series adds defined delay to the logic circuit. {As a result, the logic within each FPGA is designed, verified, and validated to ensure operation within timing constraints under expected operating conditions. The clocked synchronous design is used within each FPGA to avoid timing errors and to ensure timing constraints are satisfied. For synchronous design, changes of state within the FPGA occur only at selected times, controlled by a timing signal. The logic within each FPGA is designed to ensure that the design provides adequate shaping on the inputs to the FPGA to providing sufficient slew on the signal edges.}[8]

{To avoid timing errors within FPGAs, analysis and simulation are performed during the design process. This two-part process includes static timing analysis and dynamic timing simulation. Static timing analysis demonstrates that the setup and hold times on each path within the FPGA design are within predetermined parameters. Software tools used to perform the static timing analysis also are used to evaluate the propagation delay to each element in the code to confirm each timing path in the code is within predetermined paramaters. Also, a diverse set of dynamic simulation software tools are used to validate the design, using predetermined, accurate propagation delays, which are set based on the chosen cells and paths within the routed FPGA. These analyses provide data to the designer to verify that appropriate logic implementation has been achieved, eliminating any potential concerns regarding signal races, signal setup and hold times, and clock skew. A report is generated for implementation including safety analyses.}[10]

{The communication protocols used in the FPGA platforms are deterministic because they are pre-defined, fixed length, fixed format, and generated at specific times in the FPGA logic execution. The communication links that perform safety functions include data and time out error checking to ensure determinism. All detected errors are alarmed. The communication protocols and logic in the communication receivers include self-diagnostics that will generate module failure signals upon detection of communication failures, alerting operators.}[7, 16, 18]

In summary, the FPGA-based, safety-related NMS and RTIS are deterministic. The FPGA platform does not utilize any non-deterministic data communication, non-deterministic computation, interrupts, multitasking, dynamic scheduling, or event driven design. The logic design of the FPGA circuits is fixed and clocked. {The response times for the system elements, including architecture, communications (including timing and loading) and processing elements are tested to verify that the systems' performance characteristics are consistent with the safety requirements established in the design basis for these systems. The analyses are performed to

satisfy the design timing requirements set forth in Clause 4.10 of IEEE-603. A report is generated to demonstrate the adequacy of the timing analysis.}[10]

7DS.1.4 Diversity

The diverse SSLC protection systems allow the overall SSLC safety systems to provide protection against postulated software common cause failures (CCFs). The RTIS and NMS platforms satisfy all IEEE-603 requirements and are developed using a robust hardware/software development process that meets Tier 1 Section 3.4B and BTP 7-14.

The RTIS and NMS are diverse to the Engineered Safety Features (ESF) Logic and Control System (ELCS), which actuates the ESF actions. RTIS and NMS are implemented through FPGA-based platforms, which use configurable logic devices. The ELCS equipment uses microprocessor-based controllers where the logic is implemented in software. The RTIS and NMS are also diverse from the non-safety platforms used for the Nuclear Steam Supply System (NSSS) and Balance of Plant (BOP) control and display.

{The design includes features that enhance the diversity of RPS and MSIV closure functions, including a diverse system for mitigation of Anticipated Transient Without Scram (ATWS) events.

The defense-in-depth configuration for STP 3&4 includes fail-safe RPS systems and fail-as-is ESF systems in separate processing channels. BOP control systems are independent of RPS, NMS, and ELCS in separate communication functions using diverse hardware and software from the Essential Communication Functions (ECFs).}[14]

The STP 3&4 diversity and defense-in-depth strategies are provided in more detail in Tier 1 Section 3.4C and Tier 2 Appendix 7C.

7DS.1.5 Simplicity

The FPGA-based platform that implements safety-related NMS and RTIS is designed for simplicity. The systems have some analog circuits that process detector signals as inputs. The analog signals are converted to digital signals, and then processed by FPGA circuits. The FPGA circuits are constructed of discrete logic blocks that are similar to older, analog and discrete relay circuits in existing operating plants. The FPGA-based DI&C implements the required functionality in fixed gates with deterministic timing that cannot be changed after being programmed at the vendor facility. Priority modules are not necessary due to the simple, overall ABWR diversity strategy. Nonsafety-related equipment is designed such that it cannot control or influence the operation of safety-related functions; nonsafety functions are not performed in the safety-related equipment, which simplifies the safety-related equipment by elimination of non-essential functionality. Data is transferred from each safety division over independent, unidirectional communication links to nonsafety-related equipment for several purposes, including diverse display of safety data, preserving data for historical purposes, and performing channel cross checks. This

transfer of data shifts these complex activities to the non-safety equipment, preserving simplicity in the safety systems. The only communication between divisions is to vote on two-out-of-four trip decisions in RTIS; NMS has no inter-division communication. Thus, the RTIS and NMS platform design satisfies the subjective attribute of simplicity.

7DS.2 Engineered Safety Features Logic and Control System (ELCS)

7DS.2.1 Redundancy

{There are four divisions of sensor functions in ELCS that provide sensor input to the divisional Digital Trip Function (DTF). There are three divisions of system-level safety function initiation in the Safety Logic Function (SLF) and component control in the SLF Remote Digital Logic Controller (SLF RDLC). Divisions I, II, and III contain a DTF sensor division, SLFs for ESF system-level initiations, and SLF RDLCs for component control functions. Division IV contains a DTF sensor division only.}[1, 2]

A Division of Sensors Bypass is provided for surveillance testing and maintenance. {The Division of Sensors Bypass provides independent bypass signals to each division of ELCS. The Division of Sensors Bypass is designed to allow only one division to be bypassed at a time.}[4]

If one of the four divisions of sensors is bypassed, one divisional DTF is bypassed, and three redundant divisions of sensors remain operable. Because the system-level ESF initiation logic is two-out-of-three with a sensor division bypassed, ELCS can experience a credible single failure with a division of sensors bypassed and still meet the IEEE-603 Single Failure Criterion (Clause 5.1).

Each ESF safety function is assigned to a minimum of two divisions. Each of the division's system-level initiation and component level actuation is redundant in at least one other independent division. This assures that the ELCS complies with the IEEE-603 Single Failure Criterion (Clause 5.1).

{There are four 125 VDC redundant power sources, one for each division of ELCS. There are four redundant 120 VAC uninterruptible power sources, one for each division's safety Flat Panel Displays. Because the divisional power sources are independent, the power sources meet the IEEE-603 Single Failure Criterion (Clause 5.1).}[3]

7DS.2.2 Independence

A division of ELCS will accomplish its safety functions regardless of the operation or failure of other safety divisions, or the operation or failure of non-safety systems. A high level block diagram of one division of the ELCS data communication interfaces is shown in Figure 7.9S-1. Figure 7DS-3 provides a diagram of one ELCS division of ESF safety function initiation and component actuation.

{There are four divisions of sensor functions in ELCS that provide sensor input to the divisional DTF. There are three divisions of system-level safety function initiation in the SLF and component control in the SLF RDLC. Divisions I, II, and III contain a DTF, SLFs for ESF system-level initiations, and SLF RDLCs for component control

functions. Division IV contains a DTF sensor division only.}[1, 2] {ELCS equipment is Class 1E.}[1] {The ELCS software is safety-related and is developed in compliance with Tier 1 Section 3.4B and BTP 7-14 to conform to the requirements for service in a Class 1E application.}[5, 8, 11, 12, 13] The ELCS description of Independence includes these topics:

- Functional Independence
- Physical Independence
- Electrical Independence
- Communications independence

These topics are discussed individually in the following subsections.

7DS.2.2.1 Sensor DTF Division Functional Independence

{Each division of ELCS has independent sensors. There are no shared sensors between divisions of DTFs. There is no communication between ELCS DTFs in independent divisions. This assures that the input data for each division is independent.}[1, 3 ,15]

Each ELCS sensor division operates asynchronously from the other divisions. Each sensor division performs its safety function independently from the other sensor divisions. {Each sensor division DTF independently transmits the ESF safety function initiation information as a discrete value (vote to initiate only) to the three divisions of system-level initiation logic and component control.}[3, 15]

Each sensor division transmits the division's DTF initiation status over a unidirectional point-to-point serial data link. There is no interaction between the transmitting sensor division and the receiving division as described in Subsection 7DS.2.2.4.1.

{Where an external system needs direct sensor information from ELCS for display or recording, the ELCS analog or digital signal is isolated by a qualified isolation device before the signal enters the ELCS data acquisition equipment.}[1, 3, 17] Thus, no failure in the external system can adversely affect the direct sensor information in ELCS.

{Each external discrete signal that is hard wired to a division of ELCS is isolated by a qualified isolation device to assure that the independence of the ELCS division is maintained. The qualified isolation device is Class 1E ELCS equipment.}[1, 3, 10, 15]

7DS.2.2.2 Physical Independence

{Each of the four divisions of ELCS is physically separate from the other redundant divisions.}[3] The ELCS enclosures and equipment are seismically qualified to assure that a seismic design basis event cannot compromise the physical separation.

{All of the ELCS divisions are physically separated from the non-safety systems.}[3]

7DS.2.2.3 Electrical Independence

7DS.2.2.3.1 Independent Power Sources

{Each redundant division is powered by separate independent divisional power sources. Each division's sensors, DTF, SLFs, and SLF RDLCs receive their power from a separate and independent divisional Class 1E 125 VDC power source.}[3, 19] {The ELCS safety Flat Panel Displays in each division is powered from a separate and independent divisional source, which is the 120 VAC uninterruptible Class 1E power supply.}[19]

{The ELCS power sources are independent and separate from the non-safety power sources.}[3, 19]

7DS.2.2.3.2 Electrical Isolation

{Each ELCS division is electrically isolated from the other redundant divisions.}[3] {Each DTF transmits the division's ESF safety function initiation status over a point-to-point fiber optic cable to each SLF in the three independent divisions. Because the communication is unidirectional, isolated, and buffered, from the DTF to the SLF, there is no possibility of interaction between the transmitting DTF and the receiving SLFs that would propagate an electrical fault or degrade the independence of the sending division from the receiving division.}[1, 17]

Each SLF transmits ESF safety function system-level initiation status to Remote Digital Logic Controllers (RDLCs) in the same division as the SLF over redundant, point-to-point, fiber optic, serial data links. Because the transmission is unidirectional, isolated, and buffered, there is no possibility of interaction between the transmitting SLF and the receiving SLF RDLCs. {Because the fiber optic link from the DTF RDLC is redundant, the communication can accommodate a single cable break or failure of a fiber optic modem and continue to function without interruption.}[18] The RDLC performs the component control logic and provides control commands to a Component Interface Module (CIM), which provides the resultant control signals to the electromechanical component. The CIM provides qualified isolation for the component feedback signals.

Figure 7DS-4 provides a high level overview of the ESF safety function communication between redundant divisions.

The Reactor Trip and Isolation System (RTIS) and the Neutron Monitoring System (NMS) provide serial, unidirectional communication interfaces to ELCS to provide the capability for ELCS to display RTIS and NMS information. Communication from RTIS and NMS to ELCS remains within the same electrical division. These communication interfaces utilize fiber optic isolation. ELCS provides communication buffering in the communication interface to the safety Flat Panel Displays.

{Each ELCS division is electrically isolated from the non-safety systems.}[3] {Each ELCS division has a single unidirectional, fiber optically isolated communication link to the non-safety system. Both the communication protocol and the transmission

interface are designed such that it is not possible for the non-safety system to send data to ELCS over this communication link.}[17]

{Each external discrete signal that is hard wired to a division of ELCS is isolated by a qualified isolation device to assure that the independence of the ELCS division is maintained. The qualified isolation device is Class 1E ELCS equipment.}[1, 3, 10, 15]

These measures assure the electrical isolation and independence of each ELCS division.

7DS.2.2.4 Communications Independence

There are three types of data communication utilized for ELCS. These types are:

- Unidirectional serial point-to-point fiber optic data link
- Intra-division network
- Safety to Non-safety

7DS.2.2.4.1 Unidirectional Serial Point-to-Point Fiber Optic Isolated Data Links

{The unidirectional serial point-to-point fiber optic isolated data link utilizes a deterministic protocol.}[16] Each transmission is unidirectional from the transmitting controller to the receiving controller. The communications occur in a predictable, cyclic sequence. The communication is buffered by the communication processor, which is separate from the application processor on both the sending and receiving end of the communication process. {The unidirectional nature of the communication process in conjunction with the buffering of the communication from the application processor and the electrical isolation complies with the independence requirements of IEEE 7.4.3-2.}[7, 19]

This type of communication link is utilized to communicate automatic and manual ESF safety function information. The link is utilized to communicate ESF safety function information within a division including:

- DTF RDLC to DTF in the same division
- DTF to SLFs in the same division
- SLFs to RDLCs in the same division

This type of communication link, using separate communication equipment, is also used between divisions from a division's DTF to the SLFs in the other divisions.

{This assures that there are no communication interactions that would affect the independence of the divisions.}[19]

Unidirectional Data Communications Functions for ELCS

{Each division's DTF RDLC transmits converted sensor signals to the division's DTF. The DTF RDLC transmits the signal information to the DTF by redundant, isolated, unidirectional, point-to-point, serial data links. The links are isolated by fiber optic media. This communication is sent without requiring an acknowledgement from the receiving DTF.}[1]

The DTF receives the transmission and then determines the division's ESF safety function initiation status. The DTF then uses separate unidirectional, point-to-point, serial links to transmit the division ESF safety function initiation status as discrete data containing only the votes to initiate protective action, to each duplicate SLF in each division. These links are isolated by fiber optic media. Each of these SLFs receives an isolated unidirectional serial link from the DTF in each division. {The SLF utilizes the four sets of independent DTF ESF safety function initiation status data and determines if there is a coincidence of two initiation signals for a specific safety function. The SLF then transmits the system-level initiation status over a redundant, isolated, unidirectional serial link to the SLF RDLCs. The links are isolated by fiber optic media. The SLF RDLC receives the system-level initiation status and provides the appropriate component actuation control command to the Component Interface Module (CIM).}[1]

Component Interface Module (CIM)

{The CIM is implemented with non-microprocessor technology. A CIM is assigned to each plant component controlled by ELCS. The CIM provides the hard wired interface to the component control circuit and receives the hard wired feedback signal from the component that provides component status information.

A CIM will receive input control commands from two SLF RDLCs for components where it is desired to reduce the probability of spurious actuation. For this case, the CIM performs 2-out-of-2 coincidence logic for the commands received from two SLF RDLCs. The capability exists to bypass an ESF output channel for maintenance or surveillance testing. When an ESF output channel is bypassed, the CIM reverts to a 1-out-1 logic that utilizes the output channel that is not bypassed.}[1, 2, 4] For ESF functions that utilize a single SLF RDLC, the CIM uses 1-out-of-1 logic. The CIM communicates the component status feedback information to each SLF RDLC that provides output commands to it.

{The use of the communication methods described above for the ESF safety function automatic and manual initiation assures that the divisions are independent.}[3] Data independence is maintained by this communication method. The SLF is the only point where multiple sets of independent data are processed. {The SLF has a different receive port for each of the four independent DTF data sets. The SLF uses the independent discrete data sets in coincidence logic in a manner that assures that there is no interaction that would degrade the independence of the division.}[7, 15, 17] A description of the use of the independent data sets is provided in Subsection 7DS.2.3.3.

{Messages are sent and processed in a pre-determined format, with known lengths and data mapping within the messages. Any message that does not match the requirements provided in the communication protocol will be discarded. Only correctly formatted messages can be used. The predefined formatting and data redundancy within the message minimize the possibility of malformed messages from being used by the receiving Controller's application processor.}[1]

The design of the controller utilized for communication assures that the Boolean data communicated for the ESF safety function status cannot be used as a controller instruction. Information on this topic is provided in Subsection 7DS.2.3.3.

7DS.2.2.4.2 Intra-division Network Communication

{Each ELCS division includes an intra-division network for communication within the division. This network is separate from the ESF safety function communication. The intra-division network uses a deterministic protocol.}[16]

The intra-division network uses a communication interface module to buffer communication data from each application processor. The communication interface module receives data from the application processor in buffered memory and the communication interface module writes data to the buffered memory for the application processor to read. This assures that the application processor will perform deterministically, independent of the intra-division network status. The communication interface module performs the network communication function and diagnostics on the messages received. {The intra-division network utilizes redundant fiber optic isolating media between ELCS cabinets in separate locations such that the intra-division network can accommodate a single failure of a fiber optic modem or a single cable break and continue to function.}[7]

The intra-division network provides the following functions:

- Provides signal information and component status to the safety Flat Panel Displays. The Flat Panel Displays are dedicated to a division. {There is no capability to transmit or receive information from an external division or non-safety system from a division's safety Main Control Room Flat Panel Displays.}[17, 19]

- {Provides the capability for operator soft control for selected division components by means of the plant operators' safety Flat Panel Displays in the Main Control Room. There is no functionality or communication capability that would allow a division's safety Flat Panel Display to control components in another division.}[15, 18]

- {Provides the capability to communicate self-diagnostic information for display and alarm in the Main Control Room.}[15]

- Provides the capability for maintenance display of detailed diagnostic information and the capability to conduct surveillance testing at the Maintenance and Test Panel (MTP) installed in each division. {The MTP does not have the ability to control components in a division or communicate across divisions.}[1]

{The loss of the intra-division network will not affect the division's ability to perform the manual and automatic ESF safety function initiation and component actuation. The intra-division network does not extend beyond a division's boundary. The intra-division network has no interfaces with nonsafety-related systems. Therefore, the intra-division network adheres to the design principle of division independence.}[17, 19]

7DS.2.2.4.3 Safety to Non-Safety Communication

{Each independent ELCS division has a communications interface to the Plant Information and Control System (PICS). The ELCS Maintenance and Test Panel (MTP) provides buffered, unidirectional communications over a fiber optically isolated interface. The MTP buffers the data that is received from the intra-division network. The MTP utilizes a separate communication interface to transmit a subset of the buffered data to PICS. The MTP communication interface does not have the capability to read data. Data is transmitted without acknowledgement to the non-safety system.}[15]

7DS.2.3 Determinism

7DS.2.3.1 Overview

The response time requirements for ELCS are determined by the Safety Analysis for each ESF safety function. The ELCS response time must have a predictable and repeatable maximum value that meets the Safety Analysis requirements under all plant operational conditions determined by the STP 3 & 4 design bases.

If the response time is predictable and repeatable, then it is deterministic. The ELCS response time for all ESF safety functions is deterministic. {A formal timing analysis is developed to document the response time and meets the requirements of Clause 4.10 of IEEE-603. The analysis is validated by formal test. A report is generated to demonstrate the adequacy of this timing analysis.}[9]

A description of the ELCS design features is provided in this section. These design features assure that the design is deterministic and that the response time meets the Safety Analysis requirements for each ESF safety function.

7DS.2.3.2 Signal Input

The signal inputs represent the state of plant processes that indicate the need for an ESF safety function initiation. The sensor response time and the analog filtering of the signal determine the delay time before a signal level reaches the setpoint where an ESF safety function is required to be initiated. This delay time is included in the above timing analysis.

7DS.2.3.2.1 Signal Measurement

The signal inputs are converted to internal digital values by the analog input modules and digital input modules. The data acquisition modules function independently from the controller application processor and contain buffered values that are available for

the processor to read. The maximum delay time from signal measurement to the availability of the data to be read is included in the above timing analysis.

7DS.2.3.2.2 ELCS Controller Processing

The ELCS controller consists of an application processor and a communication processor. The two controller processors are separate and each contains its own local memory. The two separate processors share a distinct portion of memory where the information is stored for unidirectional point-to-point serial links communication. Each separate datum has a unique shared memory location. The location of the data sent by the application processor is separate from the location where the data received from the communication processor is stored. The application processor is buffered from the communication processor by shared memory so that the application processor timing is not affected by communication with other controllers.

The application processor is also buffered from the intra-division network by different buffered memory for transfer to the intra-division network communications interface module.

Communications Processor for Unidirectional Serial Communication

ELCS is designed such that all information required for ESF safety function initiation is communicated every time the communication occurs. There is no data that is communicated by “exception.”

The communications processor supports the deterministic performance of the unidirectional serial data link communications. The communication processor performs the following functions:

- Receives and buffers incoming data from each unidirectional serial link. Each unidirectional serial data message has a predetermined size that cannot exceed a predetermined maximum size.
- Provides communication diagnostics on the incoming communication message
- Formats the incoming data and stores the data in predetermined locations in memory that is shared by the application processor
- Reads the outgoing communication data from the memory shared by the application processor
- Formats the data into one outgoing message, including additional data for diagnostic purposes and provides a CRC data for the message.
- Transmits the outgoing message

The communications processor is designed to provide sufficient spare capacity such that there is a maximum fixed delay time to perform each function. The input communications are sent by a cyclic deterministic process from the transmitting processors. The output communications are initiated by the cyclic, deterministic

application processor application software modules. Because the input data is cyclic and predictable and the output data is cyclic and predictable, the communications processor performs deterministically, within the requirements of the Safety Analysis.

The applications processor performs the following functions for an application software module:

- Reads the input signals from the data acquisition modules
- Reads the unidirectional serial communication data from the memory shared by the communications processor
- Reads the communication data from the buffered memory for the communication interface module for the intra-division network
- Performs the ESF safety function algorithm calculations and logic
- Writes output signals to discrete output data modules (if the applications process has output data modules)
- Writes the output data to shared memory in the communication processor for the unidirectional serial link
- Writes the output data to buffered memory for transfer to the communications interface module for the intra-division network

The time for each of these steps has a fixed maximum delay that can be determined based on the fixed amount of data input and data output and the maximum computation time for the calculations and logic. These delay times are used to determine the minimum cycle time for application software module scheduling. Additional time margin is added to the minimum cycle time to determine the design cycle time for the application software module execution.

The scheduling of the execution of the application software modules is based on an internal clock with a precision interval timer. The scheduling is fixed by the design. There are no application processor interrupts that are driven by external process signals.

The scheduling of an application software module in an application processor is designed with sufficient margin to allow the program to execute at its predetermined frequency, with sufficient additional time available to assure the internal self-diagnostics have sufficient time to execute. The required time margin is a fixed value that is predetermined. The application processor has a self diagnostic that monitors the execution of the application software modules.

The response time analysis assumes that the input information that would result in an ESF safety function output occurs just after the program is scheduled for execution. This results in a maximum delay time that is equal to the amount of time before the application software module is scheduled to execute again, plus the time that the

program takes to execute and provide its output results. This amount of time is used as the maximum delay time in the above timing analysis.

The overall response time for an ESF safety function includes the delay time for each element in the processing chain from the sensor to the component actuation. This chain of events includes:

(1) Sensor and signal processing delay to the DTF RDLC data acquisition

(2) Signal data acquisition delay

(3) Application software execution delay as calculated above for the DTF RDLC

(4) Communications delay for the unidirectional serial link from the DTF RDLC communications processor to the DTF communications processor

(5) Communications delay from the DTF communications processor to the DTF applications processor and the parallel delay for DTF local data acquisition

(6) DTF application software module execution delay, which is calculated as described above

(7) Communications delay for the unidirectional serial link from the DTF communications processor to the SLF communications processor

(8) Communications delay from the SLF communications processor to the SLF applications processor and the parallel delay for SLF local data acquisition

(9) SLF application software module execution delay, which is calculated as described above

(10) Communications delay for the unidirectional serial link from the SLF communications processor to the SLF RDLC communications processor

(11) Communications delay from the SLF RDLC communications processor to the SLF RDLC applications processor and the parallel delay for SLF RDLC local data acquisition

(12) SLF RDLC application software module execution delay, which is calculated as described above

(13) Communications delay for the unidirectional serial link from the SLF RDLC communications processor to the CIM

(14) Processing delay of the CIM

(15) Time required for the actuated electromechanical component to achieve its predefined actuation state or condition.

{Each step in the process is predictable and repeatable. This is the time response that is designed to meet the Safety Analysis requirements.}[16]

{The timing described above assumes that the signals that require an ESF safety function response occur just after the programs are scheduled to execute. A best case analysis is also determined to establish the shortest response time that could occur if the signal value reached the ESF safety function initiation setpoint earlier. The two response times that are determined in the response time analysis are used to set the criteria for the response time validation test. A report is generated to demonstrate the adequacy of the response time analysis.}[2, 6, 7, 9, 10]

The timing analysis is performed as required by the NRC in the Plant Specific Action Items described in the Safety Evaluation report for the Common Q Topical Report, WCAP-16097-P-A. This topical report provides additional information on the deterministic performance of safety systems based on use of the Common Q platform.

7DS.2.3.3 Inter-division Communications

{Each division's DTF communicates its ESF safety function actuation status to redundant SLFs in its own division and to each of the redundant SLFs in other redundant divisions over point-to-point, unidirectional serial communications data links. Each data link uses fiber optic cable to provide the required electrical isolation between divisions.}[1]

{Each division receives a point-to-point serial data link from four redundant DTFs. The data that is transmitted by each DTF is a Boolean number where each bit in the number defines the DTF initiation status of an ESF safety function. The complete Boolean number contains the complete set of bits for all the ESF safety functions. The SLF communications processor performs a cyclic redundancy check and data redundancy check on the message. A message that passes these self-diagnostics is stored in the predetermined memory locations shared by the application processor. If the self-diagnostics detects a problem with the message, the communication processor sets an error status bit. When the error status bit is set, the application processor uses a predefined value based on the desired failure state. When the message passes the self-diagnostics, the application processor uses the data to perform Boolean logic operations to determine if two or more of the redundant logical data sets include a coincidence of two states that require a system-level initiation of one or more of the ESF system-level safety function initiations.}[1]

There are six coincidence logic sets: (1) DTF A and DTF B, (2) DTF A and DTF C, (3) DTF A and DTF D, (4) DTF B and DTF C, (5) DTF B and DTF D, and (6) DTF C and DTF D.

A single corrupted set of DTF data would only affect the accuracy of three of the six coincidence logic calculations, leaving three valid coincidence logic sets that would provide a valid system-level initiation when required. Even if one of the divisions was in division of sensor bypass, there would still be a valid calculation that would result in a valid system-level initiation when required.

Because the calculations are Boolean logic, the use of a single set of corrupted DTF data in the calculation would only produce an inaccurate result for the calculations that use the corrupted data. This will not prevent the valid data from initiating a valid ESF safety function when required.

If a single SLF failure occurs that results in no initiation output when an initiation is required, then the CIM logic for this case would prevent the ESF safety function initiation in the division that experienced the failure. The redundant set of SLFs in a redundant division would then initiate the system-level ESF safety function initiation, satisfying the single failure criterion by division redundancy.

7DS.2.3.4 Intra-division Communications

The intra-division network is utilized to:

- Communicate signal and component status information to the divisional safety Flat Panel Displays in the Main Control Room and the divisional Maintenance and Test Panel
- Provide the capability for the plant operators to utilize the Main Control Room Flat Panel Displays to control individual components in that division
- Provide the capability for maintenance and surveillance testing from the divisional safety Flat Panel Display at the Maintenance and Test Panel (MTP)

The intra-division network utilizes a communication interface module in the controller chassis. The communication interface module uses buffered memory for each controller chassis on the network to send or receive intra-division network information. The application processor writes the information it needs to transmit on the intra-division network to the buffered memory, and the communication interface module handles the transmission. The intra-division network utilizes redundant fiber optic modems and fiber optic cable for all external connections from one ELCS cabinet to another ELCS cabinet in a different location. The intra-division network utilizes a bus master that controls the network communication to assure that it is deterministic. If the bus master fails, network control automatically passes to the back-up bus master. The bus master and the intra-division communication interface modules provide self-diagnostics to assure that failures are annunciated.

{A timing analysis is performed for the intra-division network to verify meeting the response time requirements for the intra-division network, which were derived from human factors engineering (HFE) considerations.}[1, 2] This timing analysis is required by the NRC's SER for the Common Q Topical Report.

7DS.2.3.5 Self-Diagnostics for Deterministic Performance

7DS.2.3.5.1 Controller

{The applications processor and communications processor in a controller are monitored by a watchdog timer. If the cyclic processing is disturbed by a failure, the

watchdog timer will time-out and cause an annunciation.}[1] In general, each controller has a redundant counterpart that monitors the controller's watchdog timer to alarm this condition.

7DS.2.3.5.2 Unidirectional Serial Communications

The receiving Controller for each unidirectional message monitors the cyclic operation of the communication transmission. {If a new message is not received within a predetermined time interval, the receiver will cause an alarm indicating that the unidirectional serial link has failed and set the value of the message from the failed link to a predetermined value. The receiver also performs a number of diagnostic checks on the transmitted message. If the diagnostic detects a problem with the message, it will set an error status bit. When the error status bit is set, the application processor will use a predefined value based on the predetermined failure state and will alarm the condition.}[18]

7DS.2.3.5.3 Intra-division Network Communications

The bus master monitors the deterministic operation of the network. {Each communication interface module provides diagnostic checks on received messages. The communication interface module will flag bad data so that the application processor can process it in a predetermined manner.}[18]

7DS.2.3.6 Summary of Determinism

The ELCS design features and self-diagnostics assure that the ELCS will perform in a deterministic manner. {Timing analyses are performed to document the deterministic performance. Validation testing is performed to verify that ELCS meets the required response time for ESF safety function actuation. Validation testing is also performed to verify that HFE response time requirements are met. Reports are generated as previously discussed above in this section to demonstrate the adequacy of timing analyses and testing.}[16]

7DS.2.4 Diversity

7DS.2.4.1 Platform Diversity

The ELCS platform is diverse from the equipment that implements the RTIS and NMS. ELCS utilizes a microprocessor-based controller, proprietary protocol for the unidirectional serial communications utilized for the ESF safety functions, and a different proprietary protocol for the intra-division network. The RTIS and NMS utilize FPGA technology and communications protocols that are different from those used by ELCS.

ELCS is also diverse from the non-safety platforms used for NSSS and BOP control and display. ELCS utilizes a different microprocessor and communications protocols.

{ELCS is diverse from the equipment required to mitigate an ELCS failure, as described in Tier 1 Section 3.4C and Tier 2 Appendix 7C.}[14]

7DS.2.4.2 Functional Diversity by Functional Segmentation of SLFs

ELCS is designed with functional segmentation of sets of ESF safety functions. The different sets of ESF safety functions are assigned to different SLFs in each division.

7DS.2.5 Simplicity

7DS.2.5.1 Simplicity of Communications

ELCS uses unidirectional point-to-point data links to communicate automatic and manual ESF safety function initiation information. The use of this method of communication is easily implemented and analyzed to assure deterministic performance.

7DS.2.5.2 Minimization of Communication Between Safety Divisions

ELCS utilizes digital communication between divisions only for the coincidence logic voting function. This simplifies the communication design and simplifies the analysis and validation testing necessary to demonstrate independence.

7DS.2.5.3 Separation of Protection and Control

ELCS does not include non-safety system digital communication control of safety components with priority modules. ELCS control functions originate within each independent division, including dedicated Safety Flat Panel Displays in the Main Control Room.

Table 7DS-1 Cross Reference of the Tier 1 DAC/ITAAC Required for DI&C Verification

DAC/ITAAC Verification	Note	Appendix 7DS RTIS/NMS Subsection Reference*	Appendix 7DS ELCS Subsection Reference*
Tier 1, Table 3.4, ITAAC No. 1	1	1.1.1	2.1; 2.2; 2.2.1; 2.2.3.2; 2.2.4.1; 2.2.4.2; 2.3.3; 2.3.4; 2.3.5.1
Tier 1, Table 3.4, ITAAC No. 2	2	1.1.1	2.1; 2.2; 2.2.4.1; 2.3.2.2; 2.3.4
Tier 1, Table 3.4, ITAAC No. 3	3	1.1.3; 1.2.1	2.1; 2.2.1; 2.2.2; 2.2.3.1; 2.2.3.2; 2.2.4.1
Tier 1, Table 3.4, ITAAC No. 4	4	1.1.1	2.1; 2.2.4.1
Tier 1, Table 3.4, DAC No. 8	5	Coverage in Notes 7, 8, and 10	2.2
Tier 1, Table 3.4, DAC No. 8b & 11	6	†	2.3.2.2
Tier 1, Table 3.4, DAC No. 8e & 11	7	1.2.2.1; 1.3	2.2.4.1; 2.2.4.2; 2.3.2.2
Tier 1, Table 3.4, DAC No. 8g & 11	8	1.3	2.2
Tier 1, Table 3.4, DAC No. 8h & 11	9	†	2.3.1; 2.3.2.2
Tier 1, Table 3.4, DAC No. 8i & 11	10	1.3	2.2.1; 2.2.3.2; 2.3.2.2
Tier 1, Table 3.4, DAC No. 9	11	†	2.2
Tier 1, Table 3.4, DAC No. 10	12	†	2.2
Tier 1, Table 3.4, DAC No. 11	13	Coverage in Notes 7, 8, and 10	2.2
Tier 1, Table 3.4, ITAAC No. 16	14	1.4	2.4.1
Tier 1, Table 2.7.5, ITAAC No. 1	15	1.2.2.1; 1.2.2.2	2.2.1; 2.2.3.2; 2.2.4.1; 2.2.4.2; 2.2.4.3
Tier 1, Table 2.7.5, ITAAC No. 2	16	1.3	2.2.4.1; 2.2.4.2; 2.3.2.2; 2.3.6
Tier 1, Table 2.7.5, ITAAC No. 3	17	1.2.2; 1.2.2.1; 1.2.2.2	2.2.1; 2.2.3.2; 2.2.4.1; 2.2.4.2
Tier 1, Table 2.7.5, ITAAC No. 4	18	1.3	2.2.3.2; 2.2.4.2; 2.3.5.2; 2.3.5.3
Tier 1, Table 2.7.5, ITAAC No. 6	19	†	2.2.3.1; 2.2.4.1; 2.2.4.2
Tier 1, Table 2.2.5, ITAAC No. 1	20	1.1.2; 1.2.2.2	†
Tier 1, Table 2.2.5, ITAAC No. 4	21	1.1.3; 1.2.1	†
Tier 1, Table 2.2.5, ITAAC No. 8	22	1.1.2	†
Tier 1, Table 2.2.5, ITAAC No. 9	23	1.1.2	†
Tier 1, Table 2.2.7, ITAAC No. 1	24	1.1.1; 1.2.2.1	†
Tier 1, Table 2.2.7, ITAAC No. 7	25	1.1.3; 1.2.1	†
Tier 1, Table 2.4.3, ITAAC No. 1	26	1.1.1; 1.2.2.1	†

* All Subsections are preceded by 7DS.

† A particular DAC or ITAAC is not applicable to a system or no verification statements in Appendix 7DS are relevant.

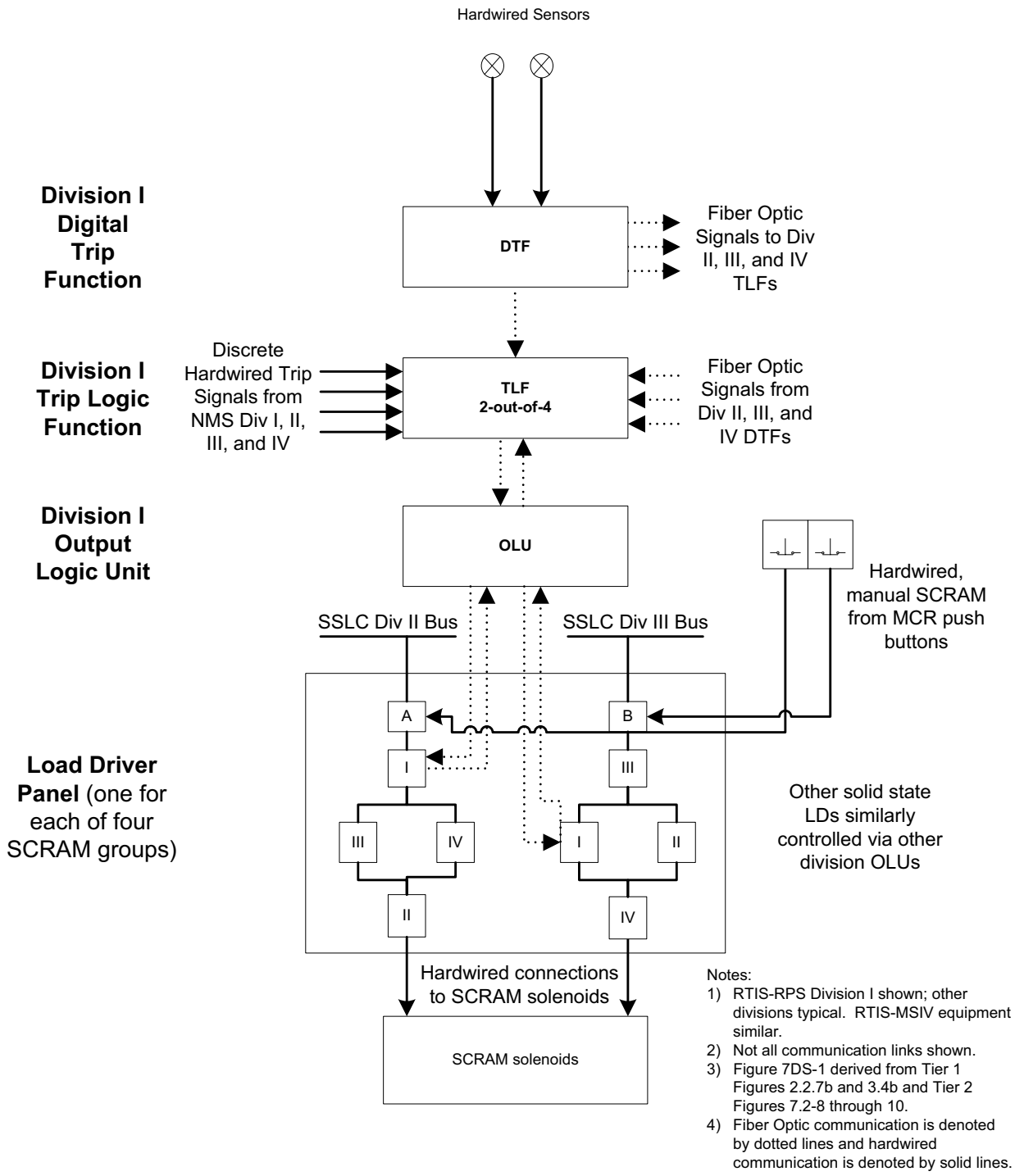

Figure 7DS-1 RTIS Divisional Simplified Block Diagram

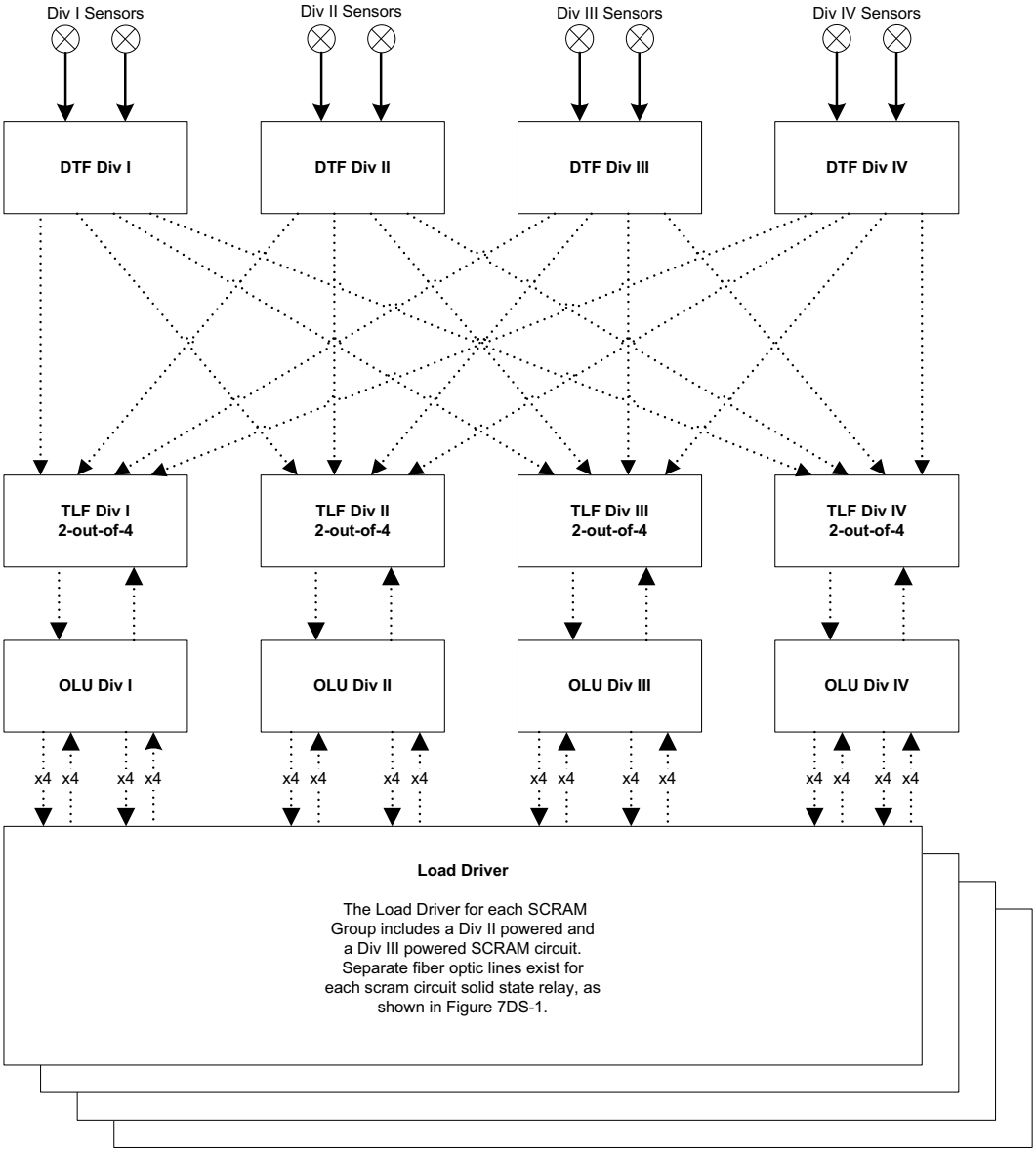

Notes:
1) RTIS-RPS Division I shown; other divisions typical. RTIS-MSIV equipment similar.
2) Not all communication links shown.
3) Figure 7DS-2 derived from Tier 1 Figures 2.2.7b and 3.4b and Tier 2 Figures 7.2-9 and 10.
4) Scram solenoids not shown. Hardwired connections to Scram solenoids.
5) Fiber Optic communication is denoted by dotted lines and hardwired communication is denoted by solid lines.

Table 7DS-2 RTIS Inter-division Communication Simplified Block Diagram

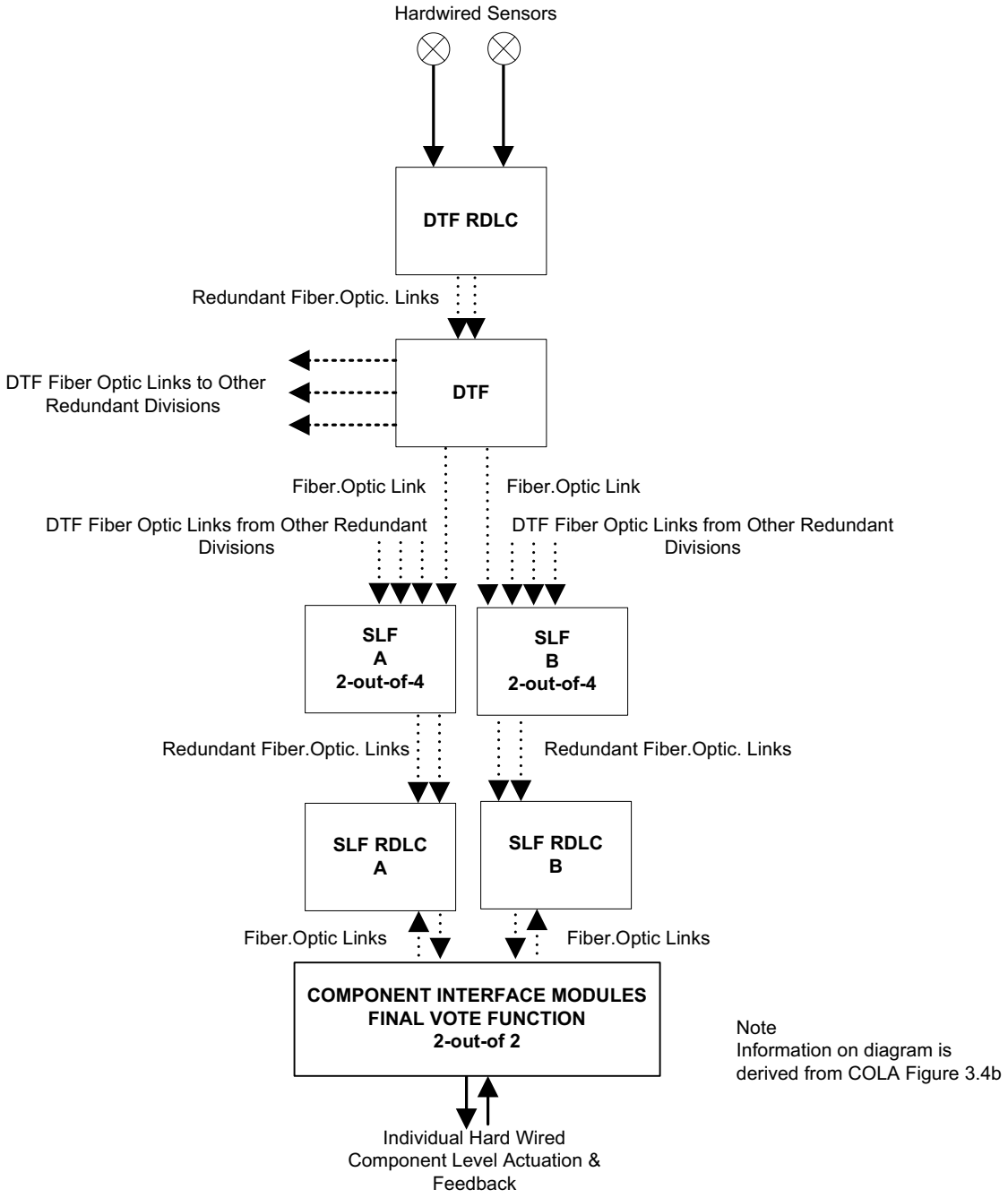

Table 7DS-3 ELCS Single Division Simplified Block Diagram

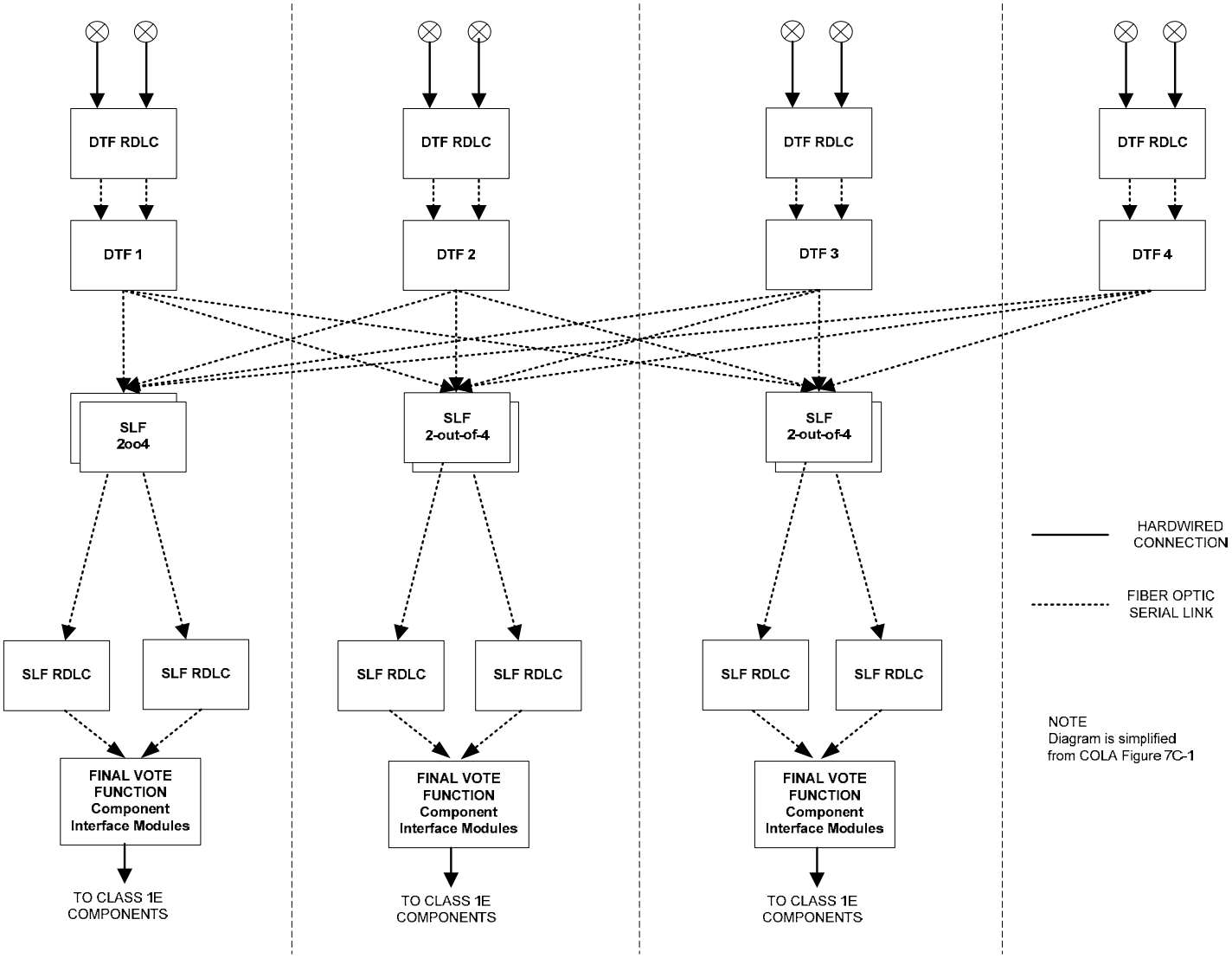

Table 7DS-4 ELCS ESF Inter-division Communication Simplified Block Diagram

8.0 Electric Power

8.1 Introduction

The information in this section of the reference ABWR DCD including all subsections and tables is incorporated by reference with the following departures and a supplement.

STD DEP T1 2.4-2

STD DEP T1 2.12-2

STP DEP 1.1-2 (Table 8.1-1)

STD DEP 1.8-1

STD DEP 8.3-1

STD DEP 9.5-1 (Table 8.1-1)

8.1.1 Offsite Transmission Network

The description of the offsite transmission network is out of the ABWR Standard Plant scope, however there are interface requirements contained in Section 8.2.3 which must be complied with by the COL applicant.

The following supplement provides site specific information on the interface between the offsite transmission network and STP 3 & 4.

The transmission service providers for STP 3 & 4 are CenterPoint Energy, AEP Texas Central Company (TCC), and City Public Service Board of San Antonio (CPS). The combined electrical grids of the three systems presently consist of interconnected fossil fuel plants which serve approximately 51,354 square miles with an overlaid 345/138/69 kV transmission system.

The three transmission service providers are members of the Electric Reliability Council of Texas (ERCOT). ERCOT consists of members engaged in generation, marketing, transmission, or distribution of electric energy within the State of Texas. ERCOT is the Independent System Operator (ISO), which oversees all generation and transmission functions.

The 345 kV switchyard at STP Units 3 & 4 has six 345 kV transmission circuits which connect it to the three transmission service providers' transmission system. Two of the 345 kV transmission circuits connect to CenterPoint Energy's Velasco substation and Hillje 345 kV switchyard. One of the 345 kV transmission circuits directly connects STPEGS and CPS's Elm Creek 345 kV switchyard near San Antonio, Texas. Two of the 345 kV transmission circuits connect to TCC's White Point 345 kV substation and the Blessing 345 kV autotransformer. The remaining TCC 345 kV circuit connects to the STP 1 and 2 switchyard via a tieline (with a series reactor).

8.1.2 Electric Power Distribution System

8.1.2.0 Definitions

STD DEP 1.8-1

Safety-related—*Any Class 1E power or protection system device included in the scope of IEEE-~~279~~ 603 or IEEE-308. (This term is explicitly defined in IEEE-100, though not in IEEE-308.) Note that "safety-related" includes both electrical and non-electrical equipment, whereas "Class 1E" pertains only to electrical equipment (i.e., any equipment which has an electrical interface).*

8.1.2.1 Description of Offsite Electrical Power System

STD DEP 8.3-1

The scope of the offsite electrical power system includes the entire offsite transmission network and the transmission lines coming into the switchyards to the termination of the bus duct and power cables at the input terminals of the circuit breakers for the ~~6.9 kV~~ medium voltage switchgear. The COL applicant has design responsibility for portions of the offsite power system. The scope split is as defined in the detailed description of the offsite power system in Subsection 8.2.1.1.

The ~~1500 MVA~~ main power transformer is a bank of three single phase transformers. One single phase installed spare transformer is provided.

~~*One, three-winding 37.5 MV-A unit reserve auxiliary transformer (RAT) provides power via one secondary winding for the Class 1E buses as an alternate to the "Normal Preferred" power. The other secondary winding supplies reserve power to the non-Class 1E buses. This is truly a reserve transformer because unit startup is accomplished from the normal preferred power, which is backfed from the offsite transmission network over the main power circuit to the unit auxiliary transformers. The two low voltage windings of the reserve transformer are rated 18.75 MV-A each.*~~

There are two (2) three winding reserve auxiliary transformers (RATs), each with one 13.8 kV and one 4.16 kV secondary winding that provide alternate preferred power to connected loads.

A ~~9mW~~ minimum of 20 MW combustion turbine generator is provided as an alternate AC power source. The unit is capable of providing power to non-Class 1E plant investment protection buses and Class 1E buses. The combustion turbine generator is non-safety-related.

8.1.2.2 Description of Onsite AC Power Distribution System

STD DEP 8.3-1

~~*Three non-Class 1E buses and one Class 1E division receive power from the single unit auxiliary transformer assigned to each load group. Load groups A, B and C line up with Divisions I, II and III, respectively. One winding of the reserve auxiliary transformer may be utilized to supply reserve power to the non-Class 1E buses either directly or*~~

~~*indirectly through bus tie breakers. The three Class 1E buses may be supplied power from the other winding of the reserve auxiliary transformer.*~~

Unit auxiliary transformers (UATs) A & B each provide power to three non-Class 1E buses and one Class 1E bus. UAT C provides power to one non-Class 1E bus and one Class 1E bus. The 13.8 kV reserve auxiliary transformer (RAT) windings can be used to supply reserve power to non-Class 1E power generation buses. The 4.16 kV RAT windings can be used to supply reserve power to the plant investment protection (PIP) buses and also to the three (3) Class 1E buses.

In general, motors larger than 300 kW are supplied from the ~~6.9 kV~~ medium voltage *metal-clad (M/C) bus. Motors 300 kW or smaller but larger than 100 kW are supplied power from 480V power center (P/C) switchgear. Motors 100 kW or smaller are supplied power from 480V motor control centers (MCC). The ~~6.9 kV~~* medium voltage *and 480V single line diagrams are shown in Figure 8.3-1.*

During normal plant operation all of the non-Class 1E buses and two of the Class 1E buses are supplied with power from the main turbine generator through the unit auxiliary transformers. The remaining Class 1E bus is supplied from ~~the~~ a *reserve auxiliary transformer* (RAT)*. This division is immediately available, without a bus transfer, if the normal preferred power is lost to the other two divisions.*

The Division I, II, and III standby AC power supplies consist of an independent ~~6.9~~ 4.16 *kV Class 1E diesel generator (D/G), one for each division. Each D/G may be connected to its respective ~~6.9~~* 4.16 *kV Class 1E switchgear bus through a circuit breaker located in the switchgear.*

The plant 480 VAC power system distributes sufficient power for normal auxiliary and Class 1E 480 volt plant loads. All Class 1E elements of the 480V power distribution system are supplied via the ~~6.9~~ 4.16 *kV Class 1E switchgear and, therefore, are capable of being fed by the normal preferred, alternate preferred, standby diesel generator, or combustion turbine generator power supplies.*

STD DEP T1 2.12-2

The Class 1E 120 VAC instrument power system, Figure 8.3-2, provides for Class 1E plant controls and instrumentation. The system is separated into Divisions I, II, ~~and~~ III, and IV *with distribution panels and local control panels fed from their respective divisional sources*, except Division IV is fed from the Division II source.

8.1.2.3 Safety Loads

STD DEP 8.3-1

The safety loads utilize various Class 1E AC and/or DC sources for instrumentation and motive or control power or both for all systems required for safety. Combinations of power sources may be involved in performing a single safety function. For example, low voltage DC power in the control logic may provide an actuation signal to control a ~~6.9~~ 4.16 kV circuit breaker to drive a large AC-powered pump motor. The systems required for safety are listed below:

(3) ESF Support Systems

(d) ~~Not Used~~ Reactor Service Water System (RSW)

(i) Leak Detection and Isolation System (LDS)

8.1.3.1.1.1 Onsite Power Systems - General

STD DEP 8.3-1

The unit's total Class 1E power load is divided into three divisions. Each division is fed by an independent ~~6.9~~ 4.16 kV Class 1E bus, and each division has access to one onsite and two offsite power sources. An additional power source is provided by the combustion turbine generator (CTG). A description of the CTG is provided in Subsection 9.5.11.

Divisions I, II, and III standby AC power supplies have sufficient capacity to provide power to all their respective loads. Loss of the preferred power supply, as detected by ~~6.9~~ 4.16 kV Class 1E bus under-voltage relays, will cause the standby power supplies to start and connect automatically, in sufficient time to safely shut down the reactor or limit the consequences of a design basis accident (DBA) to acceptable limits and maintain the reactor in a safe condition.

STD DEP T1 2.4-2

The Class 1E ~~6.9~~ 4.16 kV Divisions I, II, and III switchgear buses, and associated ~~6.9~~ 4.16kV diesel generators, the safety-related 13.8 kV breakers (to trip condensate pumps in case of feedwater pipe break), *480 VAC distribution systems, and Divisions I, II, III and IV, 120 VAC and 125 VDC power and control systems conform to Seismic Category I requirements. This equipment is housed in Seismic Category I structures except for some control sensors associated with the Reactor Protection System [Subsection 9A.5.5.1], and the Leak Detection System [Subsection 9A.5.5.7]*, and the safety-related 13.8 kV breakers (Subsection 8.3.1.1.1). *Seismic Qualification is in accordance with IEEE-344 (Section 3.10).*

8.1.3.1.2.1 General Design Criteria

STP DEP 1.1-2

(3) GDC 5 - Sharing of Structures, Systems and Components

~~*The ABWR is a single-unit plant design. Therefore this GDC is not applicable.*~~ STP 3 & 4 is a dual-unit station. Units 3 & 4 do not share AC or DC onsite emergency and shutdown electric systems. The onsite electric power systems are independent, separate, and designed with the capability of supplying minimum Engineered Safety Feature loads and loads required for attaining a safe and orderly cold shutdown of each unit, assuming a single failure and loss of offsite power.

8.1.3.1.2.2 NRC Regulatory Guides

STP DEP 1.1-2

STD DEP 9.5-1

(7) RG 1.81 - Shared Emergency and Shutdown Electric Systems for Multi-Unit Nuclear Power Plants

~~*The ABWR is designed as a single-unit plant. Therefore, this Regulatory Guide is not applicable.*~~ STP 3 & 4 is a dual-unit station. Units 3 & 4 do not share AC or DC onsite emergency and shutdown electric systems. The onsite electric power systems are independent, separate, and designed with the capability of supplying minimum Engineered Safety Feature loads and loads required for attaining a safe and orderly cold shutdown of each unit, assuming a single failure and loss of offsite power.

(9) ~~*RG 1.108 Periodic Testing of Diesel Generator Units Used as Onsite Electric Power Systems at Nuclear Power Plants*~~ Not Used

8.1.4 COL License Information

8.1.4.1 Diesel Generator Reliability

The following standard supplement addresses COL License Information Item 8.1.

Procedure(s) to monitor onsite emergency diesel generator performance in accordance with the recommendations of NUREG/CR-0660 "Enhancement of On-site Emergency Diesel Generator Reliability," will be developed before fuel load to obtain improved performance and better reliability from the standby emergency diesel generators. Training will also be developed for maintenance personnel and other appropriate plant personnel in the proper operation and maintenance of the standby emergency diesel generators. These procedures will be developed consistent with the plant operating procedure development plan in Section 13.5. (COM 8.1-1)

Table 8.1-1 Onsite Power System SRP Criteria Applicable Matrix

Applicable Criteria	Ref. IEEE Std	Offsite Power System	AC Power Systems (Onsite)	DC Power Systems (Onsite)
~~*GDC 5**~~ GDC 5			X	X
~~*RG 1.81**~~ RG 1.81			X	X
~~*RG 1.108*~~			~~X~~	
RG 1.204	IEEE-665 IEEE-666 IEEE-1050 IEEE-C62.23		X	X

~~** Multi-unit plants only; not applicable to single-unit ABWR*~~

8.2 Offsite Power Systems

The information in this section of the reference ABWR DCD including all subsections, tables, and figures is incorporated by reference with the following departures and supplements.

STP DEP 1.1-2 (Table 8.2-1)

STP DEP 8.2-1 (Figure 8.2-1)

STD DEP 8.3-1 (Table 8.2-1)

Standard Supplement - NRC Bulletin 2012-01

STD DEP Admin

Tables 8.2-2 and 8.2-3 are added as a site-specific supplement to complement the description of the STP 3 & 4 Offsite Power System.

8.2.1 Description

8.2.1.1 Scope

STD DEP 8.3-1

Applicant Scope

(4) The high voltage tie lines from the switching stations to the main power transformers, and to the reserve auxiliary transformers

(6) The reserve auxiliary transformers

ABWR Standard Plant Scope

(12) The non-segregated phase buses from the unit auxiliary transformers (UATs) *to the input terminals of the non-safety-related medium voltage (~~6.9~~* 13.8 *kV) switchgear, ~~the non-safety-related medium voltage switchgear (A4, B4, C4) and the power cables form the non-safety-related medium voltage switchgear to the safety-related switchgear~~* the power cables from the UATs to the input terminals of the plant investment protection (PIP) medium voltage (4.16 kV) switchgear and safety-related switchgear.

(13) The non-segregated phase bus and power cables from the reserve auxiliary transformers to the input terminals of the non-safety-related and safety-related medium voltage (~~6.9 kV~~ 13.8 kV and 4.16 kV*) switchgear*.

(14) The power cables from the combustion turbine generator to the input terminals of the *medium voltage (~~6.9~~* 13.8 *kV) switchgear, ~~including the disconnect and interconnecting bus~~* and interconnection power cables between 13.8 kV and 4.16 kV switchgear including the 13.8 kV/ 4.16 kV power transformer.

STD DEP 8.3-1

STD DEP Admin

The design scope for the ABWR ends at the low voltage terminals of the main power transformer and the low voltage terminals of the reserve auxiliary transformers. Although the remainder of the offsite power system is not in the scope of the ABWR design, the ABWR design is based on a power system which meets certain design concepts. Design bases (10CFR52 interface requirements) consistent with these concepts are included in Subsection 8.2.3. Meeting the design bases presented in Subsection 8.2.3 will ensure that the power system within the design scope for the ABWR meets all regulatory requirements. ~~Meeting the conceptual design bases presented in Section 8.2.5 will ensure that the total power system design is consistent and meets all regulatory requirements.~~

8.2.1.2 Description of Offsite Power System

STD DEP 8.3-1

Air cooled isolated phase bus duct is sized to provide its load requirements and withstand fault currents until the fault is cleared. It ~~is rated 36 kA and~~ provides for a power feed to the main power transformer and unit auxiliary transformers from the main generator. The sections of the isolated phase bus supplying the unit auxiliary transformers are rated ~~less than 36 kA~~ as appropriate to the load requirements (see Figure 8.3-1).

A generator circuit breaker is provided in the isolated phase bus duct at an intermediate location between the main generator and the main power transformer. The generator circuit breaker provided is capable of interrupting a maximum fault current of ~~275~~ 255 kA symmetrical and ~~340~~ 320 kA asymmetrical ~~at 5 cycles after initiation of the fault~~ in accordance with IEEE C37.013.

~~*There are three unit auxiliary transformers. Each transformer has three windings and each transformer feeds one Class 1E bus directly, two non-Class 1E buses directly, and one non-Class 1E bus indirectly through a non 1E to non 1E bus tie. The medium voltage buses are in a three load group arrangement with three non-Class 1E buses and one Class 1E bus per load group. Each unit auxiliary transformer has an oil/air rating at 65°C of 37.5 MV-A for the primary winding and 18.75 MV-A for each secondary winding. The forced air/forced oil (FOA) rating is 62.5 and 31.25/31.25 MV-A respectively. The normal loading of the six secondary windings of the transformers is balanced with the heaviest loaded winding carrying a load of 17.7 MV-A. The heaviest transformer loading occurs when one of the three unit auxiliary transformers is out of service with the plant operating at full power. Under these conditions the heaviest loaded winding experiences a load of 21.6 MV-A, which is about two-thirds of its forcedair/forced oil rating.*~~

There are three Unit Auxiliary Transformers (UATs), which are designated the normal preferred offsite source. UATs A and B are rated at 82.5/110 MVA (ONAN/ONAF). UATs A and B each have primary windings at the main generator voltage and two

secondary windings, one at 13.8 kV and one at 4.16 kV. UAT C is rated at 22.5/30 MVA (ONAN/ONAF). UAT C has primary winding at the main generator voltage and a single secondary winding at 4.16 kV. All three UATs use automatic tap changers to improve voltage regulation on the plant medium voltage buses. The UATs are designed with significant capacity margin during normal operation because the transformers operate near their ONAN ratings.

UAT A supports 13.8 kV Power Generation (PG) buses A1 and C1 and 4.16 kV Plant Investment Protection (PIP) bus A2 and Class 1E 4.16 kV bus A3. UAT B supports PG buses B1 and D1 and PIP bus B2 and Class 1E bus B3. UAT C supports PIP bus C2 and Class 1E bus C3.

~~*One, three-winding 37.5 MV-A reserve auxiliary transformer provides power as the "Alternate Preferred" power to the "Normal Preferred" power. One of the equally rated secondary windings supplies reserve power to the nine (three through cross-ties) non-Class 1E buses and the other winding supplies reserve power to the three Class 1E buses. The combined load of the three Class 1E buses is equal to the oil/air the rating of the transformer winding serving them. This is equal to 60% of the forced air/forced oil (FOA) rating of the transformer winding. The transformer is truly a reserve transformer because unit startup is accomplished from the normal preferred power, which is backfed over the main power circuit to the unit auxiliary transformers. The reserve auxiliary transformer serves no startup function. The operational configurations are such that the FOA ratings of the reserve auxiliary transformer, or any unit auxiliary transformer, will not be exceeded under any operating mode (Subsection 8.2.4.5).*~~

There are two Reserve Auxiliary Transformers (RATs), either of which can be used as the alternate preferred offsite source. RATs A and B are each rated at approximately 82.5/110 MVA (ONAN/ONAF). RATs A and B each have primary windings at the switchyard voltage and two secondary windings, one at 13.8 kV and one at 4.16 kV. RATs A and B use automatic tap changers to improve voltage regulation on the plant medium voltage buses. The RATs are designed with significant capacity margin during normal operation because the transformers operate near their ONAN ratings.

RAT A is designed to be capable of supporting PG buses A1 and C1, which are normally supported by UAT A, via an intermediate 13.8 kV bus designated as CTG 2. The 4.16 kV winding of RAT A can be aligned to support any of the three PIP buses (A2, B2, and C2) and any of the three Class 1E buses (A3, B3, and C3) and has the capacity to support all three Class 1E buses. RAT A is not normally aligned to support any PG, PIP, or Class 1E bus. RAT B is designed to be capable of supporting PG buses B1 and D1, which are normally supported by UAT B, via an intermediate 13.8 kV bus designated as CTG 1. The 4.16 kV winding of RAT B can be aligned to support any of the three PIP buses and any of the three Class 1E buses and has the capacity to support all three Class 1E buses.

The normal and alternate offsite preferred power circuits are designed with sufficient capacity and capability to limit variations of the operating voltage of the onsite power distribution system to a range appropriate to ensure: (1) normal and safe steady-state

operation of all plant loads, (2) starting and acceleration of the limiting drive system with the remainder of the loads in service, and (3) reliable operation of the control and protection systems under conditions of degraded voltage [Subsection 8.3.1.1.7 (8)]. Specifically, the unit auxiliary transformers and the reserve auxiliary transformers are designed to limit the voltage variation of the onsite power distribution system to ±10% of load rated voltage during all modes of steady state operation and a voltage dip of no more ~~that~~ than *20% during motor starting.*

According to IEEE C57.19.100 the STP Units 3 & 4 site is a medium to heavy contamination environment due to its proximity to the coast and additional salt deposition from the Ultimate Heat Sinks. To prevent insulator and bushing failure on offsite power system equipment due to contamination from salt deposition, the bushings and insulators for offsite power equipment up to the switchyard will have a minimum creep distance of 44 mm/kV and a permanent coating.

STD DEP 8.3-1

STD DEP Admin

The unit and reserve *auxiliary transformers are designed and constructed to withstand the mechanical and thermal stresses produced by external short circuits. In addition, these transformers meet corresponding requirements of the latest revisions of ANSI Standard C57.12.00. See Subsection ~~8.2.3(8)~~* 8.2.3 (4) *for interface requirements on the main step-up transformers and the reserve auxiliary transformers. ~~See Subsection 8.2.3(10) for interface requirements on the high-voltage circuit breakers and disconnect switches.~~*

STD DEP 8.3-1

The non-segregated phase bus or power cable *that connects the unit auxiliary and reserve auxiliary transformers to ~~the 6.9 kV~~* their respective *switchgear is sized to supply its load requirements and rated to withstand fault currents until the fault is cleared.*

The following site-specific supplement provides a description of the Offsite Power System for STP 3 & 4 addressing information requested by RG 1.206 and replacing the conceptual design provided in Subsection 8.2.5 of the reference ABWR DCD.

The offsite power system includes at least two (2) preferred sources of power for the reactor protection system and engineered safety features (ESFs) during normal, abnormal, and accident conditions. It includes a minimum of two (2) independent and physically separated 345 kV circuits of the six (6) circuits available from the transmission network as required by GDC 17. Five of the six (6) offsite circuits for STP 3 and 4 are existing transmission lines that were connected to the STP 1 & 2 switchyard and have been re-routed to the STP 3 & 4 switchyard. Of the six (6) transmission lines, four identified as preferred sources of power are as follows: White Point 39, Elm Creek 27, Velasco 27, and the tieline with a series reactor between STP 3 & 4 switchyard and the STP 1 & 2 switchyard. The remaining two (2) transmission lines, Hillje 44 and Blessing 44, are used for power transmission. However, these two

lines do not meet the criteria of being independent and physically separated. Hillje 44 crosses under the Elm Creek 27 line at the Hillje switchyard. Blessing 44 connects to the local 138 kV system via an autotransformer and is considered a source which can not supply adequet power and voltage under all operating scenarios. Refer to Figure 8.2-6 for 345 kV transmission configuration. The offsite power system encompasses the connections to the power grid, transmission lines (overhead and/or underground), transmission line towers, transformers, switchyard components and control systems, switchyard battery systems, MPT, and the RATs.

The offsite power system is designed to provide reliable and redundant sources of power for starting, operation, and safe shutdown of STP 3 & 4 in accordance with GDC 17. The offsite power system configuration, single line, general arrangement, and transmission network map are shown in the following figures:

Figures 8.2-1 (7 sheets)	Power Distribution Routing Diagrams
Figure 8.2-2	345 kV General Arrangement
Figure 8.2-3	345 kV Switchyard Single Line Diagram
Figure 8.2-4	345 kV Switchyard Arrangement
Figure 8.2-5	Transmission Network Map of ERCOT
Figure 8.2-6	345 kV Transmission Configuration

8.2.1.2.1 Transmission Lines

Six 345 kV transmission circuits rated from 896 MVA to 1793 MVA (Reference 8.2-3) connect the STP 3 & 4 switchyard to the Electric Reliability Council of Texas (ERCOT) grid, as shown on Figure 8.2-6. These six 345 kV circuits provide the source of AC power to the 345 kV switchyard. The 345 kV transmission circuits terminate at six points as follows: at Velasco 345 kV Substation (CenterPoint Energy); at Hillje 345 kV Switchyard (CenterPoint Energy); at Elm Creek 345 kV Switchyard (City of Public Service Board of San Antonio (CPS); at White Point 345 kV Substation (AEP Texas Central Company (TCC); at the STP 1 & 2 switchyard via a tieline with a series reactor (TCC); and at Blessing 345 kV Substation autotransformer (TCC). The Blessing 345 kV autotransformer is connected to the TCC's Blessing 138 kV Substation.

The STP 3 & 4 transmission lines utilize the existing (from STP 1 & 2) corridor and rights-of way for interconnects to the existing transmission grid. The description of the transmission system components for both existing and new structures as listed below fully describes and qualifies the use of this system within the present boundaries of the existing corridors. Transmission service providers (TSP) in the ERCOT region are subject to regulations of the Public Utility Commission of Texas (PUCT) that control new transmission facilities or interconnections needed to provide transmission service to and from the transmission grid. (Reference 8.2-3).

Three (3) existing rights-of-way commence from the STPEGS property (for STP 1, 2, 3, & 4) toward the termination points described below and shown on Figure 8.2-5. The eastern right-of-way is 100 ft wide and contains two (2) 345 kV circuits to Velasco (on double-circuit structures). The western right-of-way is 100 ft wide and contains a 345 kV circuit to Blessing. The middle or northwestern right-of-way is 400 ft wide and contains six (6) circuits. These circuits are carried on three sets of double-circuit towers. The Elm Creek 18 and the W.A.Parish 39 line locations are on the eastern structures, the Hillje 64 and the Elm Creek 27 lines are on the middle structures. The White Point 39 and the Hillje 44 line are on the western structures. There is adequate spacing between the middle and western towers to allow complete failure of one without jeopardizing the other. For the purpose of analysis, the right-of-way has been considered as two independent rights-of-way. This right-of-way is approximately 20 miles long and terminates in four separate rights-of-way varying in width from 100 to 150 ft. The Velasco 27 line includes an underground 345 kV cable that crosses under the two double circuit overhead lines that feed Elm Creek 18, Hillje 64, and W.A.Parish 39. This underground installation eliminates the possibility of a failure of the overhead lines from impacting the Velasco 27 line. The transmission configuration map showing the proposed usage of existing rights-of-way in the region is included in Figure 8.2-5. Refer to Figure 8.2-6 for transmission configuration for both STP 1 & 2 and STP 3 & 4.

A list of all transmissions circuits from each of the four transmission service providers to the STPEGS plant site is given in Table 8.2-2. This table includes all termination points, ownership of the circuit, circuit operating voltage, and approximate circuit length in miles.

The 345 kV transmission circuits are routed on rights-of-way as described above except for the distance from the rights-of-way to the STP 3 & 4 switchyard on the STPEGS plant property. In this small section, the 345 kV structures are arranged as depicted in Figure 8.2-2. The location of transmission circuits within this small section has been analyzed and failure of a tower due to failure of an adjacent tower has been determined not to adversely impact plant offsite power supply.

The 345 kV transmission system from STP 3 & 4 to the ERCOT grid is designed so that any two of the 345 kV transmission circuits from STP 3 & 4 may be taken out of service and the full-load generation of STP 3 & 4 can still be transmitted to their respective load centers. The loss of any double-circuit structure or any two transmission circuits does not reduce the availability of the offsite supply of power to the STP 3 & 4 345 kV switchyard. The transmission grid associated with the plant is further designed so the loss of an independent right-of-way may necessitate some reduction in generation output, but does not reduce the availability of the offsite supply of power. The transmission system is designed to maintain a voltage variance of +/- 5% without STP 3 & 4 reactive support in accordance with ERCOT Protocols, Operating Guides and Procedures (Reference 8.2-6). With a +/- 5% voltage variance on the grid, the onsite power distribution system maintains a +/- 10% voltage on the loads. The ERCOT Protocols, Operating Guides and Procedures also keep the frequency at 60 Hz except during periods of major generation loss. During periods of generation loss, frequency will drop; however, ERCOT employees automatic firm load

shedding schemes which unload the grid and allow generators to recover to normal frequency.

All the transmission lines to the STPEGS plant are designed for reliability and performance. The structures for these circuits, as well as the 345 kV switchyard, are built to withstand hurricane force winds. In southeastern Texas, the ice-loading condition on transmission lines is not considered significant since it is less than the hurricane wind-loading on transmission or substation structures. The 345 kV structures have sufficient vertical spacing to minimize galloping conductor flashover. Galloping conductors have caused outages primarily of 138 kV and 69 kV vertically spaced circuits since the vertical spacing between conductors is much less than that for 345 kV circuits. Galloping conductors are considered a rare phenomenon in southeastern Texas. The Transmission Line Historical Data on Outages Due to Failures, Table 8.2-3, does not attribute any outages due to galloping conductors.

The isokeraunic level in thunderstorm days per year is moderate to moderately high for the Texas Gulf Coast area. Long-term historical data show this area to have approximately 65 thunderstorm days per year (Reference 8.2-4). The transmission line design has sufficient basic insulation level (BIL) to minimize lightning flashover from the expected number of lightning strokes (the number of lightning strokes is assumed proportional to the number of thunderstorm days per year).

The ERCOT grid and transmission system (as described in Section 8.1.1) ensures that AC offsite power is available for shutdown of STP 3 & 4 and for mitigating the consequences of postulated accidents at either unit.

8.2.1.2.2 Switchyard Description

The STP 3 & 4 345 kV switchyard is sized and configured to accommodate the output of both units. The location of this switchyard is on the STP site approximately 650 feet north of STP 3 & 4. The switchyard layout and location are shown on Figures 8.2-2, 8.2-4 and 8.2-6.

As indicated on Figure 8.2-3, a breaker and-a-half scheme is incorporated in the design of the 345 kV switchyard. The switchyard bus is a 63 kA fault duty design. Circuit breakers and disconnect switches are sized and designed in accordance with ANSI Standard C37.06 (Reference 8.2-1). All circuit breakers are equipped with dual trip coils. The 345 kV circuit breakers in the switchyard are rated according to the following criteria:

- Circuit breaker continuous current ratings are chosen such that no single contingency in the switchyard (e.g., a breaker being out for maintenance) will result in a load exceeding 100 percent of the nameplate continuous current rating of the breaker.

- Interrupting duties are specified such that no fault occurring on the system, operating in steady-state conditions, will exceed the breaker's nameplate interrupting capability.

- Momentary ratings are specified such that no fault occurring on the system, operating in steady-state conditions, will exceed the breaker's nameplate momentary rating.
- Voltage ratings are specified to be greater than the maximum expected operating voltage.

All 345 kV breakers have a minimum symmetrical interrupting capability of 63,000 amperes. The Onsite Electrical System is designed for a future maximum switchyard short circuit contribution of 37 Gva.

The design of the switchyard is consistent with a standard breaker-and-a-half scheme, and includes seven bays in the configuration. The breaker-and-a-half switchyard arrangement offers the operating flexibility to maintain the anticipated operational containment integrity and other vital functions in the event of a postulated accident(s) as described in the Failure Modes and Effects Analysis (FMEA) Subsection 8.2.2.2. Some of the specific advantages of the breaker-and-a-half switchyard arrangement are:

- Any transmission line into the switchyard can be cleared either under normal or fault conditions without affecting any other transmission line or bus.
- Either bus can be cleared under normal or fault conditions without interruption of any transmission line or the other bus.
- Any circuit breaker can be isolated for maintenance or inspection without interruption of any transmission line or bus.
- A fault in a tie breaker or failure of the breaker to trip for a line or generator fault results only in the loss of its two adjacent circuits until it can be isolated by disconnect switches.
- A fault in a bus side breaker or failure of the breaker to trip for a line or generator fault results only in the loss of the adjacent circuits and the adjacent bus until it can be isolated by disconnect switches.

Electrical protection of circuits from the STP 3 & 4 switchyard use a primary and secondary relaying scheme. The current input for the protective relaying schemes come from separate sets of circuit breaker bushing current transformers. Also, the control power for all primary and secondary relaying schemes is supplied from separate 345 kV switchyard 125 VDC systems. These schemes are used for the following:

- The scheme is used on each of the six 345 kV transmission circuits from the STPEGS 345 kV switchyard to the ERCOT grid. The potential input for the primary and secondary transmission circuit relaying systems is supplied from fused branch circuits originating from a set of coupling capacitor potential devices connected to the associated transmission circuit.

- The switchyard buses use a primary and backup scheme. The zone of protection of each 345 kV bus includes all the 345 kV circuit breakers adjacent to the protected bus.
- Line protection for the main power transformers and reserve auxiliary transformers use primary and backup schemes.

In addition to the above described STP 3 & 4 345 kV switchyard relaying systems, each of the 345 kV circuit breakers has an associated circuit breaker failure relaying system. The primary and secondary relaying systems of the STP 3 & 4 345 kV switchyard are connected to separate trip circuits in each 345 kV circuit breaker.

For the two 125 VDC batteries located in the STPEGS 345 kV switchyard control house, each battery has its own battery charger. Each battery charger is connected to separate 480 VAC distribution panel boards also located in the control house. The 345 kV switchyard 125 VDC systems are entirely independent of the unit non-Class 1E and unit Class 1E battery systems.

The STP 3 & 4 345 kV switchyard 480 VAC and 120/240 VAC station service system consists of two 4.16 kV/480 VAC load center transformers, a 480 VAC double-ended load center, two 480 VAC distribution panel boards, a 480/120-240 VAC transformer bank and two 120/240 VAC distribution panel boards. The 4.16 kV/480 VAC load center transformers are supplied by two 4.16 kV non-Class 1E feeders, one from each unit, and each are provided with a backup power feed from the CTG.

The control cables for the switchyard breakers are routed through three parallel, independent cable trenches. The two outer trenches carry the primary relaying and control for all breakers. The center trench carries the secondary (or backup) relaying and control for all breakers. Cables are routed from each breaker to the respective trenches in such a fashion as to maintain separation between primary and secondary circuits.

8.2.1.2.3 Main Power and Reserve Auxiliary Transformers

The main power transformer (MPT) and the reserve auxiliary transformers (RATs) tie-lines run south from the new 345 kV switchyard toward STP 3 & 4.

The MPT consists of three normally energized single phase transformers with an additional installed spare. Provisions are made to permit connecting and energizing the spare transformer following a failure of one of the normally energized transformers.

The calculated rated conditions for the MPT(s) are approximately 1612 MVA with a nominal voltage of approximately 26 kV and with taps at 105%, 102.5%, 100%, 97.5%, and 95% of 362.25 kV. The MPTs are each individually rated at approximately 537.5 MVA. MPT and high voltage circuits have sufficient impedance to limit the primary side maximum available fault current contribution from the system to that required by the main generator output circuit breaker.

The offsite transmission circuits from the transmission network through and including the main step-up power and reserve auxiliary transformers are designed and constructed to withstand the mechanical and thermal stresses from the worst case faults.

The offsite transmission circuits from the transmission network through and including the main step-up power and reserve auxiliary transformers are sized to supply their load requirements during all design operating modes of their respective Class 1E divisions and non-Class 1E load groups.

The impedances of the unit auxiliary and reserve auxiliary transformers are compatible with the interrupting capability of the plant's circuit interrupting devices.

The main step-up power and reserve auxiliary transformers are provided with separate oil collection pits and drains to safe disposal area, and are provided with fire protection deluge systems as specified in Section 9A.4.6.

Each transformer has primary and backup protective devices. DC power to the primary and backup devices is supplied from separate non-Class 1E DC sources.

8.2.1.2.4 Monitoring of Main Power and Reserve Auxiliary Transformers

Standard Supplement - NRC Bulletin 2012-01

NRC Bulletin 2012-01 discusses the possibility that an open phase condition, with or without accompanying ground faults, located on the high-voltage side of a transformer connecting a GDC 17 offsite power circuit to the plant electrical system could, result in a degraded condition in the onsite power system (see Reference 8.2-7). To address this issue, protection of the Class 1E busses is provided as described in subsection 8.3.1, and monitoring of the normal and alternate preferred power supply feeds through the MPT and RATs is provided as described below.

All three phases of the MPT and RATs are monitored by specific transformer relays for open phase, and ground faults in any combination of one or more phases. The specific relays initiate alarms in the Main Control Room when an open phase or ground fault is detected. If required, operators will complete manual actions to address the alarms. Testing of the monitoring system is performed per Section 8.2.4.1 of this chapter to verify proper functionality.

Maintenance and testing procedures, including calibration and troubleshooting procedures, associated with the monitoring system are in accordance with Subsection 13.5. Control room operator and maintenance technician training associated with the operation and maintenance of the monitoring system is in accordance with Section 13.2.

8.2.1.3 Separation

STD DEP 8.3-1

STD DEP Admin

The location of the main power transformer, unit auxiliary transformers, and reserve auxiliary transformers are shown on Figure 8.2-1. The reserve auxiliary transformers ~~is~~are separated from the main power and unit auxiliary transformers by minimum distance of 15.24m. It is a requirement that the 15.24m minimum separation be maintained between the switching station and the incoming tie lines ~~(see Section 8.2.3)~~. The transformers are provided with oil collection pits and drains to a safe disposal area.

Reference is made to Figures 8.3-1 for the single line diagrams showing the method of feeding the loads. The circuits associated with the alternate offsite circuit from the reserve auxiliary transformers to the Class 1E buses are separated by walls or floors, or by at least 15.24m, from the main and unit auxiliary transformers. The circuits associated with the normal preferred offsite circuit from the unit auxiliary transformers to the Class 1E buses are separated by walls or floors, or by at least 15.24m, from the reserve auxiliary transformers. Separation of the normal preferred and alternate preferred circuits is accomplished by floors and walls over their routes through the Turbine, Control and Reactor Buildings except within the switchgear rooms where they are routed to opposite ends of the same switchgear lineups. Either reserve auxiliary transformer may be used to satisfy requirements as the alternate preferred power supply. Separation between the two reserve auxiliary transformers is not sufficient to allow each to be considered an independent offsite power supply.

STP DEP 8.2-1

The alternate preferred feeds from the reserve auxiliary transformers are routed inside the Turbine Building. The Turbine Building switchgear feed from the reserve auxiliary transformer is routed directly to the Turbine Building switchgear rooms. The feed to the Control Building is routed in corridors outside of the Turbine Building switchgear rooms. It exits the Turbine Building and crosses the Control Building roof on the opposite side of the Control Building from the route for the normal preferred power feeds. The steam tunnel is located between the normal preferred feeds and the alternate preferred feeds across the stepped roof of the Control Building. The alternate preferred power feed turns down between the Control and Reactor Building and enters the Reactor Building on the ~~Division II~~ Division I *side of the Reactor Building. From there it continues on to the respective switchgear rooms in the Reactor Building.*

STD DEP 8.3-1

Feeder circuit breakers from the unit auxiliary and reserve auxiliary transformers to the medium voltage ~~(6.9 kV)~~ switchgear are interlocked to prevent paralleling the normal and alternate power sources.

STD DEP Admin

Instrument and control cables associated with the normal preferred power circuits are separated [i.e., by 15.24m, or by walls or floors] from the instrument and control cables associated with the alternate preferred power circuits; with exception of the circuits in the control room, the circuits at the control and instrument DC power sources, and the interlock circuitry required to prevent paralleling of the two offsite sources. However,

these circuits are electrically isolated and separated to the extent practical, and are not routed together in the same raceway. The reserve auxiliary transformers' power, instrument and control cables do not share raceways with any other cables. The instrumentation and control circuits for the normal and alternate preferred power shall not rely on a single common DC power source. ~~*[See Subsection 8.2.3 items (13) and (15)]*~~

STD DEP 8.3-1

A combustion turbine generator (CTG) supplies standby power to the non-Class 1E buses which supply the non-Class 1E plant investment protection (PIP) loads. It is a ~~*9 MW*~~ 20 MW (minimum) *rated self-contained unit which is capable of operation without external auxiliary systems. Although it is located on site, it is treated as an additional offsite source in that it supplies power to multiple load groups. In addition, manually controlled breakers provide the capability of connecting the combustion turbine generator to any of the Class 1E buses if all other AC power sources are lost.*

In this way, the CTG provides a second "offsite" power source to any Class 1E bus being fed from the reserve auxiliary transformers while the associated unit auxiliary transformer is out of service.

8.2.2.1 General Design Criteria

STP DEP 1.1-2

(1) GDC 5 and RG 1.81 - Sharing of Structures, Systems and Components

~~*The ABWR is a single-unit plant design. Therefore this GDC is not applicable.*~~ STP 3 & 4 is a dual-unit station. STP 3 & 4 receive offsite power from a common 345 kV switchyard through normal and alternate preferred power transmission lines and circuits in accordance with GDC 17. The Failure Modes and Effects Analysis (FMEA) discussed in Section 8.2.2.2 concludes that there are no single failures which can prevent the offsite power system from performing its function to maintain the anticipated operational containment integrity and other vital functions in the event of a postulated accident. The ability to perform an orderly shutdown and cooldown of the other unit in the event of an accident is not significantly impaired and it is concluded that GDC 5 and RG 1.81 are met.

STD DEP 8.3-1

(2) GDC 17—Electric Power Systems

As shown in Figure 8.3-1, each of the Class 1E divisional ~~*6.9*~~ 4.16 *kV M/C buses can receive power from multiple sources. There are separate utility feeds from the offsite transmission network (via the main power transformer,* the unit auxiliary transformers, *and the reserve auxiliary transformers).*

8.2.2.2 Failure Modes and Effects Analysis (FMEA)

8.2.2.2.1 Introduction

This subsection provides a description of the failure modes and effects analysis (FMEA) for the "Offsite Power System" for the STP 3 & 4 units. This specific FMEA is a supplement and is provided for each of the following in accordance with RG 1.206:

- Transmission Line Towers
- Transmission Line Conductors
- 345 kV Switchyard
- Circuit Breakers
- Disconnect Switches
- Main Power Transformers (MPTs)
- Reserve Auxiliary Transformers (RATs)

Regulatory Guide 1.206 requires that an FMEA be performed on Switchyard components to assess the possibility of simultanious failure of both prefered circuits as a result of single event.

8.2.2.2.2 Analysis

Outage data on the 345 kV transmission lines of current experience is given in Table 8.2-3.

8.2.2.2.2.1 Transmission Line Tower(s) Failure Mode Evaluation

The 345 kV towers that will be constructed for STP 3 & 4 and the STP 1 & 2 transmission line towers that will be reworked for STP 3 & 4 are designed and constructed using the same type of design as the existing towers for STP 1 & 2. All towers for STP 1 & 2 are grounded with either ground rods or a counterpoise ground system. All transmission line towers are constructed and grounded using the same methods.

Failure of any one tower due to structural failure can at most disrupt and cause a loss of power distribution to only those circuits on the tower. The spacing of the towers between adjacent power circuits is designed to account for the collapse of any one tower.

Therefore, one of the preferred sources of power remains available for this failure mode in order to maintain the containment integrity and other vital functions in the event of a postulated accident(s).

8.2.2.2.2.2 Transmission Line Conductor(s) Failure Mode Evaluation

The transmission lines have conductors installed or resized with replacement conductors to the proper load carrying conductor size in order to accommodate the additional capacity as a result of STP 3 & 4.

Failure of a line conductor would cause the loss of one preferred source of power but not more than one.

Therefore, a minimum of one preferred sources of power remains available for this failure mode in order to maintain the containment integrity and other vital functions in the event of a postulated accident(s).

8.2.2.2.2.3 345 kV Switchyard Failure Mode Evaluation

As indicated in Figure 8.2-3 and 8.2-4, a breaker-and a-half scheme is incorporated in the design of the 345 kV switchyard for STP 3 & 4. The 345 kV equipment in the switchyard are all rated and positioned within the bus configuration according to the following criteria in order to maintain load flow incoming and outgoing from the units.

- Equipment continuous current ratings are chosen such that no single contingency in the switchyard (e.g., a breaker being out of for maintenance) can result in current exceeding 100 percent of the continuous current rating of the equipment.
- Interrupting duties are specified such that no faults occurring on the system exceed the equipment rating.
- Momentary ratings are specified such that no fault occurring on the system exceeds the equipment momentary rating.
- Voltage ratings are specified to be greater than the maximum expected operating voltage.

The breaker-and-a-half switchyard arrangement offers the following flexibility to control a failed condition within the switchyard:

- Any faulted transmission line into the switchyard can be isolated without affecting any other transmission line.
- Either bus can be isolated without interruption of any transmission line or other bus.
- Each battery charger is connected to a 480 VAC distribution panel board located in the STP 3 & 4 345 kV switchyard control house. The 345 kV switchyard 125 VDC systems are independent of the unit non-Class 1E and unit Class 1E battery systems.
- A primary and secondary relaying system is included on each of the six 345 kV transmission circuits from the STP 3 & 4 345 kV switchyard to the ERCOT grid. All relay schemes used for protection of the offsite power circuits and the switching station equipment include primary and backup protection features. All breakers are

equipped with dual trip coils. Each protection circuit which supplies a trip signal is connected to a separate trip coil.

- Instrumentation and control circuits of the main power offsite circuit (i.e., normal preferred power circuit) are separated from the instrumentation and control circuits for the reserve power circuit (i.e., alternate preferred power circuit)

- The current input for the primary and secondary transmission circuit relaying systems is supplied from separate sets of circuit breaker bushing current transformers. The potential input for the primary and secondary transmission circuit relaying systems is supplied from fused branch circuits originating from a set of coupling capacitor potential devices connected to the associated transmission circuit. The control power for the primary and secondary transmission circuit relaying systems is supplied from separate 345 kV switchyard 125 VDC systems.

- A primary and secondary relay system is included for protection of each of the STP 3 & 4 345 kV switchyard buses. The zone of protection of each 345 kV bus protection system includes all the 345 kV circuit breakers adjacent to the protected bus. The primary relay is the instantaneous high impedance type used for bus protection to detect both phase and ground faults. This relay is connected in conjunction with auxiliary relays and pilot wire relaying to form a differential protection, instantaneous auxiliary tripping, and transferred tripping relay system. The secondary relay system and pilot wire relaying is a duplicate of the primary relay system.

- The current input for the primary and secondary 345 kV bus relaying systems is supplied from separate sets of 345 kV circuit breaker bushing current transformers. The control power for the relay terminals of the primary and secondary 345 kV bus relaying systems located in the STP 3 & 4 345 kV switchyard control house is supplied from separate 345 kV switchyard 125 VDC systems.

- A primary and secondary relay system is included on each of the circuits connecting the MPT(s) and the RAT(s) to their respective STP 3 & 4 345 kV switchyard position. The zone of protection of each of the MPT(s) circuit connection protection system includes two associated circuit breakers at the STP 3 & 4 345 kV switchyard and the high side bushings of the MPT(s). The secondary relay system is a duplicate of the primary relay system.

- The current input for the primary and secondary MPT and the RAT circuit connection relaying systems are supplied from separate sets of 345 kV circuit breaker bushing current transformers, MPT and RAT transformer bushing current transformers. The control power for the relay terminals of the primary and secondary MPT circuit connection relaying systems located in the STP 3 & 4 345 kV switchyard control house are supplied from separate 345 kV switchyard 125 VDC systems. The control power for the relay terminals of the primary and secondary MPT and RAT circuit connection relaying systems located at the unit relay room are supplied from the respective unit non-Class 1E 125 VDC battery systems.

- Spurious relay operation within the switchyard that trips associated protection system will not impact any primary or backup system.

Therefore, a minimum of one preferred source of power remains available for this failure mode in order to maintain the containment integrity and other vital functions in the event of a postulated accident(s).

8.2.2.2.2.4 Circuit Breakers Failure Mode Evaluation

As indicated in Figures 8.2-3 and 8.2-4, a breaker-and-a-half scheme is incorporated in the design of the 345 kV switchyard for STP 3 & 4. The 345 kV equipment in the switchyard are rated and positioned within the bus configuration according to the following criteria in order to maintain load flow incoming and outgoing from the units:

- Circuit breaker continuous current ratings are chosen such that no single contingency in the switchyard (e.g., a breaker being out for maintenance) will result in a load exceeding 100 percent of the nameplate continuous current rating of the breaker.
- Interrupting duties are specified such that no fault occurring on the system, operating in steady-state conditions will exceed the breaker's nameplate interrupting capability.
- Any circuit breaker can be isolated for maintenance or inspection without interruption of any transmission line or bus.
- A fault in a tie breaker or failure of the breaker to trip for a line or generator fault results only in the loss of its two adjacent circuits until it can be isolated by disconnect switches.
- A fault in a bus side breaker or failure of the breaker to trip for a line or generator fault results only in the loss of the adjacent circuits and the adjacent bus until it can be isolated by disconnect switches.

In addition to the above described STP 3 & 4 345 kV switchyard relaying systems, each of the 345 kV circuit breakers has a primary protection rely and a backup protection relay. The primary relay is a different type or manufacture from the backup relay. This will preclude common mode failure issues with the protection relays.

The primary and secondary relaying systems of the STP 3 & 4 345 kV switchyard are connected to separate trip circuits in each 345 kV circuit breaker. The control power provided for the 345 kV switchyard primary and secondary relaying protection and breaker control circuits consists of two independent 125 VDC systems.

8.2.2.2.2.5 Disconnect Switch(s) Failure Mode Evaluation

All 345 kV disconnect switches have a momentary rating higher than the available short circuit level. The disconnect switches are implemented into the switchyard configuration to isolate main power circuits that have failed or are out for maintenance. A failure of the disconnect switch results only in the loss of its two adjacent circuits.

Therefore, a minimum of one preferred source of power remains available for this failure mode in order to maintain the containment integrity and other vital functions in the event of a postulated accident(s).

8.2.2.2.2.6 Main Power Transformers (MPTs) Failure Mode Evaluation

A primary and secondary relay system precludes any failure interruption of power to the plant as a result of a lost or damaged MPT(s).

Failure of any MPT will require a transfer of power to the standby RATs. Each RAT has a rating equal or greater to that of a UAT and the capability to supply all Engineered Safety Feature buses in a unit.

8.2.2.2.2.7 Reserve Auxiliary Transformers (RATs) Failure Mode Evaluation

The RAT(s) serve as a standby transformer to the UAT(s) associated with the respective unit and an alternate path to offsite power. Each RAT has the capacity to supply all Engineered Safety Feature (ESF) buses in a unit.

Failure of any transformer will result in a manual transfer of the sources of power for the 13.8kV plant generation buses, plant investment protection buses and ESF buses and will be initiated by the operator from the control room.

8.2.2.2.3 Conclusion

The finding of the FMEA is that there are no single failures which can prevent the "Offsite Power System" from performing its function to maintain the anticipated operational containment integrity and other vital functions in the event of a postulated accident(s).

8.2.2.3 Grid Analysis

This subsection provides an analysis in accordance with RG 1.206.

An interconnection study (Reference 8.2-3) was performed by the transmission companies for steady state short circuit and stability analysis. These steady state analyses are performed for single and double circuit contingency on the 345 kV transmission system surrounding STP. The details as stated in Subsection 8.2.1.2.1 describing the offsite power system are met in accordance with North American Electric Reliability Corporation, ERCOT, TCC, and CenterPoint Energy planning criteria. These studies further demonstrate that the loss of any double-circuit 345 kV transmission line, the loss of any two 345 kV transmission circuits, or the loss of all circuits on any single independent right-of-way do not endanger the supply of offsite power required for starting, operation, and safe shutdown of STP 3 & 4.

A short circuit analysis has been performed as part of the interconnection study. The calculated maximum short circuit level at the STP 3 & 4 switchyard is less than the equipment short circuit criteria rating.

Stability studies were undertaken to evaluate the dynamic stability performance of both the proposed expansion and the existing STP power plants during transmission

disturbances. Three phase fault initiated tripping events involving existing STP 1 & 2 switchyard, STP 3 & 4 switchyard and the Hillje 345 kV switchyard transmission outlets were simulated. These cases included all the possible double circuit tower outage combinations, as well as selected pairs of independent line outages. All 345 kV transmission lines cleared the faults within 4 cycle duration. The simulation results indicate stable operation of the existing STP 1 & 2 and STP 3 & 4 for all second level transmission line contingency conditions. The stability of the grid is fully maintained when considering the loss of the largest generation source, STP 3 & 4, based on the interconnection study (Reference 8.2-3).

Based on this interconnection study (Reference 8.2-3), the preferred sources of power are maintained across the associated power grid and will remain available to maintain the anticipated operational containment integrity and other vital functions in the event of a postulated accident(s).

ERCOT uses a real time contingency analysis to determine the condition of the grid for a multitude of single contingencies. For STP 3 & 4, ERCOT will run single contingencies for loss of largest generation and critical transmission lines like the analysis performed for STP 1 & 2 via the requirements of ERCOT's Protocols, Operating Guides and Procedures (Reference 8.2-6). During periods of instability or when analyzed switchyard voltages are lower than the allowed limit, the transmission operator will notify STP 3 & 4.

8.2.2.3.1 Grid Availability

ERCOT is composed of bulk power systems. The organization of ERCOT includes an engineering subcommittee which conducts joint studies by testing the adequacy of the bulk power system. The studies performed jointly by the members of the ERCOT Engineering Planning Subcommittee include steady-state load flow, transient stability, and loss-of-load probability (generation planning). The load flow and transient stability cases are designed to test the ERCOT bulk power planning criteria for reliability. Of primary importance in these ERCOT studies is the adequacy of the interconnection and bulk power system (primary 345 kV) to provide import capability to any system.

ERCOT relies on the TSPs to interconnect generation and loads to the ERCOT grid. For generators, an interconnection agreement is entered and provides rules and operating requirements. STP 3 & 4 interconnection agreement is expected to be similar to the STP 1 & 2 interconnection agreement. STP 1 & 2 agreement (Reference 8.2-5) requires the TSPs to support the needs of the nuclear plant for real time operation of the grid and for long term planning studies, including increased loading of the transmission system and new generation facilities.

The major load areas of the ERCOT system are interconnected by a 345 kV transmission network. The 345 kV voltage level is used for the bulk transmission system because it provides a high degree of reliability and has sufficient transport capability between the major load and generation areas.

The 345 kV transmission systems from STPEGS to the ERCOT grid are designed with sufficient BIL to endure expected lightning and switching surge voltage and expected

insulator contamination. Design of transmission towers and circuit components conform to industry requirements. Studies and outage data in Table 8.2-3 demonstrate that offsite power for safe shutdown of the electrical system is highly reliable and no improvement in line outage rate is experienced.

8.2.3 Interface Requirements

The following site-specific supplements address the interface requirements for this subsection. STP 3 & 4 Offsite Power System meets the design bases assumptions, as referenced below:

(1) Reference Subsection 8.2.1.2.

(2) Reference Subsection 8.2.1.2.1.

(3) Reference Subsection 8.2.1.2.1.

(4) Reference Subsections 8.2.1.2, 8.2.1.2.1, 8.2.1.2.2 and 8.2.1.2.3.

(5) Reference Subsections 8.2.1.2.3.

(6) Reference Subsections 8.2.1.2, 8.2.1.2.1, 8.2.1.2.2 and 8.2.2.2.2.3 and Figure 8.2-1.

(7) Reference Subsections 8.2.1.2, 8.2.1.2.2 and 8.3.2.

8.2.4 COL License Information

8.2.4.1 Periodic Testing of Offsite Equipment

The following site-specific supplement addresses COL License Information Item 8.2.

Offsite power systems are designed to test periodically: (1) the operability and functional performance of the components of the offsite power systems, such as onsite power sources, relays, switches, circuit breakers, and buses, and (2) the operability of the systems as a whole and, under conditions as close to design as practical, the full operational sequence that brings the systems into operation, including operation of applicable portions of the protection system, and the transfer of power among the nuclear power unit, the offsite power system and the onsite power system. Procedures will be developed prior to fuel load to include periodic testing and/or verification of the following items 1-9. These will be established to be consistent with the requirements of GDC 18 and the plant operating procedure development plan in Section 13.5 (COM 8.2-1). The procedures will provide for the following:

(1) Verify normal offsite power circuit to be energized and connected to the appropriate Class 1E distribution system division and alternate offsite power circuit to be energized at least once every 12 hours.

(2) Maintenance, calibration and functional test for instrumentation, control, and protection systems, equipment, and components associated with the normal and alternate offsite preferred circuits. Calibration of instrumentation and

functional tests include tolerances for relays and meters such that minimum operable voltages for offsite power will not be exceeded, based on the design of the system. Functional test will be performed on transformers with load tap equipment including the controller. The test procedures include expected effects on the distribution system and equipment during the test. Relay testing will be performed periodically in accordance with applicable industry standards or industry accepted practice.

(3) The required Class 1E and non-Class 1E loads can be powered from their designated preferred power supply within the capacity and capability margins specified in Tier 2 for the offsite system circuits.

(4) Functional testing of undervoltage schemes that detect the loss of the offsite preferred power supply.

(5) Preferred power supplies switching

(6) Surveillances for the batteries and chargers meet accepted industry standards for their design load profiles and recharge times. Battery discharge testing will be performed periodically in accordance with applicable industry standards or industry accepted practice.

(7) Maintenance and functional test for the generator breaker.

(8) Isolated and non-segregated phase bus ducts are inspected and maintained such that they are clear of debris, fluids, and other undesirable materials. Also, terminals and insulators are inspected, cleaned and tightened, as necessary.

(9) Potential and power transformer testing, ground grid testing, arrester testing, and circuit breaker timing tests will be performed periodically in accordance with applicable industry standards or industry accepted practice.

The test and inspection intervals will be established and maintained according to the guidelines of IEEE-338, Section 6.5, as appropriate for non-Class 1E systems (i.e., Items (4) and (7) of Section 6.5.1 are not applicable), except as specifically noted above.

8.2.4.2 Procedures when a Reserve or Unit Auxiliary Transformer is Out of Service

This subsection of the ABWR DCD is replaced in its entirety with the following site-specific supplement which addresses COL License Information Item 8.3.

Technical Specifications limit plant operation whenever one of the unit auxiliary or both of the reserve auxiliary transformers is inoperable.

8.2.4.3 Offsite Power Systems Design Bases

The following site-specific supplement addresses COL License Information Item 8.4.

The interface requirements in Subsection 8.2.3 pertaining to offsite power systems have been adopted as design bases for STP 3 & 4.

8.2.4.4 Offsite Power Systems Scope Split

The following site-specific supplement addresses COL License Information Item 8.5.

The interface requirements in Subsection 8.2.3 pertaining to offsite power systems scope split have been adopted as design bases for STP 3 & 4.

8.2.4.5 Capacity of Auxiliary Transformers

This subsection of the ABWR DCD is replaced in its entirety with the following site-specific supplement which addresses COL License Information Item 8.6.

Procedure(s) that provide limits to assure that the ONAF ratings of the unit auxiliary or reserve auxiliary transformers are not exceeded under any operating mode will be developed before fuel load consistent with the plant operating procedure development plan in Section 13.5. (COM 8.2-2)

8.2.5 Conceptual Design

The conceptual design information in this section is replaced with the following site-specific supplement.

For site-specific design of the STP 3 & 4 Offsite Power System refer to Subsections 8.2.1.2, 8.2.1.3, and 8.2.3.

8.2.6 References:

The following site-specific supplement adds new references.

8.2-3 American Electric Power Service Corporation, Center Point Energy Houston Electric, LLC, CPS Energy, and Austin Energy, Interconnection Study for New Generation in Matagorda County, Interim report for Generation 15INR008, June, 2007.

8.2-4 Weatherbase. (2007). *Historical Weather for Houston, Texas.* Retrieved August 22, 2007 from http://www.weatherbase.com/weather/

8.2-5 South Texas Project Interconnection Agreement between Reliant Energy, Incorporated; Central Power and Lighting Company; City of San Antonio, Texas; City of Austin, Texas; and STP Nuclear Operating Company, Effective date August 15, 2002.

8.2-6 ERCOT Protocols, Operating Guides and Procedures online at: http://www.ercot.com

8.2-7 NRC Bulletin 2012-01, “Design Vulnerability in Electric Power System,” July 27, 2012.

Table 8.2-1 Additional Requirements IEEE-765

IEEE-765 Reference	Requirement or Explanatory Note
7.0 Multi-Unit Considerations	~~*The ABWR is a single unit design, therefore*~~ The STP 3 and 4 plant is a dual ABWR plant, but *there is no sharing of preferred power supplies between units.*

Table 8.2-2 Tranmission Lines Providing Offsite Power To South Texas Project Electric Generating Station STP 3 & 4

Transmission Line	Ownership	Nominal Operating kV	Right-of-Way	Approximate Line Length (mi)
Elm Creek 27	CPS Energy	345 kV	NW	155
Hillje 44	CNP	345 kV	NW	20
White Point 39	AEP	345 kV	NW	133
Velasco 27	CNP	345 kV	E	45
Blessing 44	AEP	345 kV	W	15
STP 1 & 2	AEP	345 kV	E	0.5

Table 8.2-3 Transmission Line Historical Data on Outages Due to Circuit Breaker Actuations
STP Unit 1 & 2

Failure Description	No. of Incidents (1980 - 2006)	
	Instantaneous	Lock-out
Airplane/Foreign Object into Circuit	1	6
Breaker Failure	1	8
Broken Insulator	8	7
Broken Conductor	0	5
Electrocution (Bird/Human)	0	2
Insulator Flashover Contamination	19	36
Lightning	56	13
Personnel Error	2	14
Relay Mis-operation	9	11
Trees / Vines into Circuits	4	10
Unknown	103	63
Weather Related	53	94

The following figure is located in Chapter 21:

- ***Figure 8.2-1 Power Distribution System Routing Diagram (Sheets 1-7)***

A site-specific supplement adds the following figures in Chapter 21:

- **Figure 8.2-2 345 kV General Arrangement**
- **Figure 8.2-3 345 kV Switchyard Single Line Diagram**
- **Figure 8.2-4 345 kV Switchyard Arrangement**
- **Figure 8.2-5 345 kV Transmission Configuration Map**
- **Figure 8.2-6 Topographic Map of 345 kV Transmission Line (Blessing SE Line)**

8.3 Onsite Power Systems

The information in this section of the reference ABWR DCD including all subsections, tables, and figures is incorporated by reference with the following departures and supplements.

STD DEP T1 2.4-2 (Figure 8.3-1)

STD DEP T1 2.12-2

STD DEP T1 2.14-1 (Tables 8.3-1, 8.3-3, and 8.3-4)

STP DEP 1.1-2

STD DEP 6.2-2

STD DEP 8.3-1 (Figure 8.3-1)

STP DEP 8.3-3 (Table 8.3-1, Table 8.3-3, Figure 8.3-1, and Figure 8.3-2)

STD DEP 9.5-1

STP DEP 10.2-1 (Figure 8.3-1)

Standard Supplement - NRC Bulletin 2012-01

STD DEP Admin

8.3.1 AC Power Systems

STD DEP 8.3-1

Standard Supplement - NRC Bulletin 2012-01

The onsite power system interfaces with the offsite power system at the input terminals to the supply breakers for the normal, alternate, and combustion turbine generator power feeds to the medium voltage (~~6.9 kV~~ 13.8 kV and 4.16 kV) switchgear. ~~It is a three load group system with each load group consisting of a non-Class 1E and a Class 1E portion.~~ The system consists of four load groups on non-Class 1E 13.8 kV Power Generation (PG) buses, three load groups on non-Class 1E 4.16 kV Plant Investment Protection (PIP) buses, and three load groups on Class 1E 4.16 kV buses. The three load groups of the Class 1E power system (i.e., the three divisions) are independent of each other. The principal elements of the auxiliary AC electric power systems are shown on the single line diagrams (SLD) in Figures 8.3-1 through 8.3-3.

Each Class 1E division has a dedicated safety-related, Class 1E diesel generator, which automatically starts on high drywell pressure, low reactor vessel level or loss of voltage on the division's ~~6.9~~ 4.16 kV bus. The signals generated from high drywell pressure and low reactor vessel level are arranged in two-out-of-four logic combinations, and are utilized to sense the presence of a LOCA condition and

subsequently start the diesel. These signals also initiate the emergency core cooling systems.

The loss of voltage condition and the degraded voltage condition are sensed by independent sets of three undervoltage relays (one on each phase of the ~~6.9~~ 4.16 kV bus) which are configured such that two-out-of-three trip states will initiate circuitry for transferring power from offsite power to the onsite diesel generator (after a time delay for the degraded voltage condition). The primary side of each of the instrument potential transformers (PTs) is connected phase-to-phase (i.e., a "delta" configuration) such that a loss of a single phase will cause two of the three undervoltage relays to trip, thus satisfying the two-out-of-three logic. (For more information on the degraded voltage condition and associated time delays, etc., see Subsection (8) of 8.3.1.1.7.)

NRC Bulletin 2012-01 discusses the possibility that an open phase condition, with or without accompanying ground faults, located on the high-voltage side of a transformer connecting a GDC 17 offsite power circuit to the plant electrical system could, result in a degraded condition in the onsite power system (see Reference 8.2-7). To address this issue, monitoring of the normal and alternate preferred power supply feeds through the MPT and RATs is provided as described in subsection 8.2.1.2.4 and the Class 1E busses are provided with negative sequence voltage relays to ensure that the motors on the 1E busses are not subjected to unbalanced currents and voltages as described below.

Each of the Divisional Class 1E 4.16kV busses, has 3 negative sequence voltage relays configured such that a two-out-of-three trip state will initiate circuitry for transferring power from the offsite power supply to the onsite diesel generator after a time delay. Each negative sequence relay monitors all three bus phases using the bus instrument potential transformers. Should negative sequence voltage that would adversely affect the motors be present on a 4.16kV bus, the two-out-of-three logic will automatically actuate (see Subsection (10) of 8.3.1.1.7). Upon actuation, the negative sequence relays annunciate in the Main Control Room.

Each ~~6.9~~ 4.16 kV Class 1E bus feeds its associated 480V unit ~~substation~~ power center through a ~~6.9~~ 4.16 kV/ 480/277V power center transformer.

STP DEP 1.1-2

STD DEP 8.3-1

Standby power is provided to plant investment protection non-Class 1E loads in all three load groups by a combustion turbine generator located in the turbine building. CTG Bus 1 can be tied to CTG Bus 2 by the manual closing of the CTG bus tie breaker. When the plant conditions are beyond the design basis, the plant operators have the capability to cross-connect an alternate power source from the other unit. The cross-tie breakers can only be closed after complying with the shedding requirements and loads limitations in accordance with off-normal/emergency procedures.

STD DEP 8.3-1

AC power is supplied at ~~6.9~~ 13.8 kV or 4.16 *kV for motor loads larger than 300 kW and transformed to 480V for smaller loads. The 480V system is further transformed into lower voltages as required for instruments, lighting, and controls. In general, motors larger than 300 kW are supplied from the ~~6.9~~* 13.8 kV or 4.16 *kV buses. Motors 300 kW or smaller but larger than 100 kW are supplied power from 480V switchgear. Motors 100 kW or smaller are supplied power from 480V motor control centers.*

8.3.1.0.1 Non-Class 1E Medium Voltage Power Distribution System

STD DEP 8.3-1

The non-Class 1E medium voltage power distribution system consists of ~~nine 6.9 kV buses divided into three load groups~~ four 13.8 kV PG buses and three 4.16 kV PIP buses. *The ~~three load~~* four bus *~~group~~ configuration was chosen to* meet the requirement that the ten Reactor Internal Pumps (RIPs) be powered by four independent buses. This will minimize large core flow reduction events and *match the mechanical* power generation *systems which are mostly ~~three~~* four *trains (e.g. ~~three~~* four *feedwater pumps*, four condensate pumps, four condensate booster pumps, four heater drain pumps, and *~~three~~* four *circulating water pumps~~, three turbine building supply and exhaust fans~~)*. The three bus configuration was chosen to match the supported mechanical systems, which typically consist of two or three trains.

~~Within each load group there is one~~ The four *power generation ~~bus which supplies~~* buses supply *power production loads ~~which do not provide water to the pressure vessel~~. Each one of these buses has access to power from one winding of its assigned unit auxiliary transformer. ~~It~~* Each PG bus *also has access to ~~the~~* a *reserve auxiliary transformer* or CTG *as an alternate source, if its unit auxiliary transformer fails or during maintenance outages for the normal feed. Bus transfer between preferred power sources is manual dead bus transfer and not automatic.*

~~Another power generation bus within each load group supplies power to pumps which are capable of supplying water to the pressure vessel during normal power operation (i.e., the condensate and feedwater pumps). These buses normally receive power from the unit auxiliary transformer and supply power to the third bus [plant investment protection (PIP)] in the load group through a cross-tie. The cross-tie automatically opens on loss of power but may be manually re-closed if it is desired to operate a condensate and feedwater pump or a condensate pump from the reserve auxiliary transformer which is connectable to the PIP buses. In addition, the combustion turbine generator is capable of supplying power to any of the condensate pumps through the bus ties from the PIP buses. This provides three load groups of non-safety grade equipment, in addition to the divisional Class 1E load groups, which may be used to supply water to the reactor vessel in emergencies.~~

*~~A third~~ Plant Investment Protection (PIP) bus*es *supply~~ies~~ power to non-safety loads (e.g. the turbine building HVAC, the turbine building service water and the turbine building closed cooling water systems)* in three load groups. *On loss of normal* or alternate *preferred power ~~the cross-tie to the power generation bus is automatically~~*

~~tripped open and the non-Class 1E PIP bus is automatically transferred (two out of the three buses in the load groups transfer)~~, an automatic transfer of pre-selected buses occurs *via a dead bus transfer to the combustion turbine which automatically starts on loss of power. The PIP systems for each* selected *load group automatically restart to support their load*s ~~*groups*~~*.*

~~*The non-Class 1E buses are comprised of metal clad switchgear rated for 7.2 kV 500 MV.A with a bus full load rating of 2000A. Maximum calculated full load short time current is 1700A. Bus ratings of 3000A are available for the switchgear as insurance against future load growth, if necessary. The circuit breaker interrupting capacity is 41,000 amperes*~~ The non-Class 1E switchgear interruption ratings are chosen to be capable of clearing the maximum expected fault current. The continuous ratings are chosen to carry the maximum expected normal currents. The 13.8 kV/4.16 kV switchgear is rated at 15 kV/4.76 kV, respectively. *Instrument and control power is from the non-Class 1E, 125VDC power system.*

The ~~*6.9*~~ 13.8 *kV buses supply power to adjustable speed drives for the feedwater and reactor internal pumps. These adjustable speed drives are designed to the requirements of IEEE-519. Voltage distortion limits are as stated in Table 4 of the IEEE Std.*

~~*Each 6.9 kV bus has a safety grounding circuit breaker designed to protect personnel during maintenance operations (see Figure 8.3-1). During periods when the buses are energized, these breakers are racked out (i.e., in the disconnect position). A control room annunciator sounds whenever any of these breakers are racked for service. The interlocks for the bus grounding devices are as follows:*~~

~~*(1) Under voltage relays must be actuated.*~~

~~*(2) Bus Feeder breakers must be in the disconnect position.*~~

~~*(3) Voltage for bus instrumentation must be available.*~~

~~*Conversely, the bus feeder breakers are interlocked such that they cannot close unless their associated grounding breakers are in their disconnect positions*~~ Each medium voltage 13.8 kV and 4.16 kV bus has a spare space which can be used to insert a manual grounding circuit device for use during maintenance activities.

8.3.1.0.2.1 Power Centers

STD DEP 8.3-1

Power for the non-Class 1E 480V auxiliaries is supplied from power centers consisting of ~~*6.9 kV/*~~ 13.8 kV/480V or 4.16 kV/*480V transformers and associated metal-clad switchgear (see Figure 8.3-1).* ~~*There are six non-Class 1E, (two per load group), power centers. One power center per load group is supplied power from the non-Class 1E PIP bus in the load group*~~ There is at least one power center on each of the medium voltage PG and PIP buses.

8.3.1.0.6.2 Grounding Methods

STD DEP 8.3-1

Station grounding and surge protection is discussed in Section 8A.1. The medium voltage ~~(6.9kV)~~ system is low resistance grounded except that the combustion turbine generator is high resistance grounded to maximize availability.

See Subsection 8.3.4.14 for COL license information pertaining to administrative control for bus grounding circuit ~~breakers~~ devices.

8.3.1.0.6.3 Bus Protection

STD DEP 8.3-1

Bus protection is as follows:

(1) ~~6.9kV~~ Medium voltage *bus incoming circuits have inverse time over-current, ground fault, bus differential and under-voltage protection.*

(2) ~~6.9kV~~ Medium voltage *feeders for power centers have instantaneous, inverse time over-current and ground fault protection.*

(3) ~~6.9kV feeders for heat exchanger building substations have inverse time overcurrent and ground fault protection~~ Not Used.

(4) ~~6.9kV~~ Medium voltage *feeders used for motor starters have instantaneous, inverse time over-current, ground fault protection.*

8.3.1.1.1 Medium Voltage Class 1E Power Distribution System

STD DEP 8.3-1

Class 1E AC power loads are divided into three divisions (Divisions I, II, and III), each fed from an independent ~~6.9~~ 4.16 *kV Class 1E bus. During normal operation (which includes all modes of plant operation; i.e., shutdown, refueling, startup, and run), two of the three divisions are* normally *fed from an offsite normal preferred power supply. The remaining division is* normally *fed from the alternate preferred power source (Subsection 8.3.4.9).*

The Class 1E buses are comprised of metal clad switchgear ~~rated for 7.2kV 500MV-A with a bus full load rating of 2,000 amperes. Maximum calculated full load short time current is 1,700 amperes. Bus ratings of 3,000 amperes are available for the switchgear as insurance against further load growth, if necessary. The circuit breaker interrupting capacity is 41,000 amperes~~ with normal and interrupting ratings that are sized to carry normal loads and to clear expected faults. *~~Instrument and control power is from the Class 1E 125VDC power system in the same Class 1E division~~.* Control and instrument power for each Class 1E division are supplied by its associated Class 1E 125 VDC power system.

~~*Each 6.9 kV bus has a safety grounding circuit breaker designed to protect personnel during maintenance operations (see Figure 8.3-1). During periods when the buses are energized, these breakers are racked out (i.e., in the disconnect position). A control room annunciator sounds whenever any of these breakers are racked in for service.*~~

~~*The interlocks for the bus grounding devices are as follows:*~~

~~*(1) Under voltage relays must be actuated.*~~

~~*(2) Bus Feeder breakers must be in the disconnect position.*~~

~~*(3) Voltage for bus instrumentation must be available.*~~

~~*Conversely, the bus feeder breakers are interlocked such that they cannot close unless their associated grounding breakers are in their disconnect positions.*~~ Each medium voltage 4.16 kV bus has a spare space which can be used to insert a manual grounding circuit device for use during maintenance activities. A main control room indication is provided when the bus grounding circuit device is installed.

Standby AC power for Class 1E buses is supplied by diesel generators at ~~6.9~~ 4.16 kV and distributed by the Class 1E power distribution system. Division I, II and III buses are automatically transferred to the diesel generators when the preferred power supply to these buses is ≤70% bus voltage.

STP DEP 8.3-3

The Division I Class 1E bus supplies power to three separate groups of non-Class 1E fine motion control rod drive (FMCRD) motors (see Figure 8.3-1, ~~sheet 3~~ sheet 4). Although these motors are not Class 1E, the drives may be inserted as a backup to scram and are of special importance because of this. It is important that the first available standby power be available for the motors, therefore, a diesel supplied bus was chosen as the first source of standby AC power and a combustion turbine supplied PIP bus as the second backup source. Division I was chosen because it was the most lightly loaded diesel generator.

STD DEP 8.3-1

~~*The load breakers in the Division I switchgear are part of the isolation scheme between the Class 1E power and the non-Class 1E load. In addition to the normal over-current tripping of these load breakers, Class 1E zone selective interlocking is provided between them and the upstream Class 1E bus feed breakers.*~~

The fault interrupt capability of all Class 1E breakers, fault interrupt coordination between the supply and load breakers for each Class 1E load and the Division I non-Class 1E load~~, and the zone selective interlock feature of the breaker for the non-Class 1E load~~ all have the capability of being tested (Subsection 8.3.4.29).~~ The zone selective interlock is a feature of the trip unit for the breaker and is tested when the other features such as current setting and long time delay are tested.~~

~~*If fault current flows in the non-Class 1E load, it is sensed by the Class 1E current device for the load breaker and a trip blocking signal is sent to the upstream Class 1E feed breakers. This blocking lasts for about 75 milliseconds. This allows the load breaker to trip in its normal instantaneous tripping time of 35 to 50 milliseconds, if the magnitude of the fault current is high enough. This assures that the fault current has been terminated before the Class 1E upstream breakers are free to trip. For fault currents of lesser magnitude, the blocking delay will time out without either bus feeder or load breakers tripping, but the load breaker will eventually trip and always before the upstream feeder breaker. This order of tripping is assured by the coordination between the breakers provided by long-time pickup, long-time delay and instantaneous pickup trip device characteristics.*~~ Class 1E microprocessor controlled protective relaying equipment senses fault current flowing in the non-Class 1E load. This equipment utilizes digital timers that can reproduce the timing requirements by sensing the number of cycles of the electrical waveform itself. Coordination of the definite time delay and the upstream bus feeder breakers allows termination of the fault current before the feeder breakers are free to trip. *Tripping of the Class 1E feed breaker is normal for faults which occur on the Class 1E bus it feeds.* ~~*Coordination is provided between the bus main feed breakers and the load breakers.*~~

Power is supplied to each FMCRD load group from either the Division I Class 1E bus or ~~*the*~~ a *non-Class 1E PIP bus through* a non-Class 1E automatic transfer switch located between the power sources and the 480V FMCRD power distribution panels. Switchover to the non-Class 1E PIP bus source is automatic on loss of power from the Class 1E diesel bus source.~~*a pair of interlocked transfer switches located between the power sources and the 6.9 kV/480V transformer feeding the FMCRD MCC. These transfer switches are classified as associated, and are treated as Class 1E. Switchover to the non-Class 1E PIP bus source is automatic on loss of power from the Class 1E diesel bus source.*~~ *Switching back to the Class 1E diesel bus power is by manual action only.* Per IEEE-384 and Regulatory Guide 1.75, isolation between the Class 1E bus and non-1E load is maintained.

STD DEP 8.3-1

STP DEP 8.3-3

The design minimizes the probability of a single failure affecting more than one FMCRD group by providing ~~*three*~~ six *independent* ~~*Class 1E*~~ *feeds (*~~*one*~~ two *for each group) directly from the Division I Class 1E* ~~*6.9 k*~~ and PIP 480*V bus*es *(see sheet 3* and 4 *of Figure 8.3-1).* The two Class 1E protective devices connected in series provide isolation between the Class 1E bus and non-Class 1E load. The transfer switches are non-Class 1E. The feeder circuits from the non-Class 1E PIP bus to the transfer switch, and circuits downstream of the transfer switch, are non-Class 1E.~~*The Class 1E load breakers in conjunction with the zone selective interlocking feature (which is also Class 1E), provide the needed isolation between the Class 1E bus and the non-Class 1E loads. The feeder circuits on the upstream side of the Class 1E load breakers are Class 1E. The FMCRD circuits on the load side of the Class 1E load breakers down to and including the transfer switches are associated. Control power for the transfer switches is provided from Division I. The feeder circuits from the non-Class 1E PIP bus*~~

~~to the transfer switch, and circuits downstream of the transfer switch, are non-Class 1E.~~

STD DEP 8.3-1

~~The Class 1E load breakers in conjunction with the zone selective interlocking feature (which is also Class 1E), provide the needed isolation between the Class 1E bus and the non-Class 1E loads. The feeder circuits on the upstream side of the Class 1E load breakers are Class 1E. The FMCRD circuits on the load side of the Class 1E load breakers down to and including the transfer switches are associated. Control power for the transfer switches is provided from Division I. The feeder circuits from the non-Class 1E PIP bus to the transfer switch, and circuits downstream of the transfer switch, are non-Class 1E.~~

STD DEP T1 2.4-2

STD DEP 6.2-2

The Safety System Logic and Control (SSLC) initiates a trip of the condensate pumps when a feedwater line break is detected in the drywell. Although not credited in the FWLB analysis in Chapter 6.2, this trip provides added assurance of conservatism in the feedwater mass flow used in the analysis. This FWLB mitigation has been added to the STP 3&4 design, which adds safety related instrumentation to sense and confirm a FWLB based on high differential pressure between feedwater lines coincident with high drywell pressure to trip the condensate. In order to trip the condensate pumps, a provision of 13.8 kV medium voltage safety-related breaker in series with the non-safety 13.8 kV feeder breaker exists for each condensate pump. The trip circuit of each safety-related 13.8 kV breaker includes two independent trip coils. Each trip coil is powered from a separate division of Class 1E 125V DC system. Two separate divisions of safety-related control signals for feedwater line break are provided to initiate the trip of each breaker. This dual breaker in series arrangement ensures that the condensate pumps will trip on a feedwater line break.

The 13.8 kV breakers (both safety-related and nonsafety-related) are located in the Turbine Building. The procurement and design of the safety-related breakers are required to meet the criteria for performing the safety function of tripping the condensate pump breakers in case of the feedwater line break design basis event. The 125V DC control power and trip circuits of the safety-related breakers are also required to meet the independence criteria per RG 1.75. In addition, the safety-related breakers and its components are required to be seismically installed and missile protected at their location in the Turbine Building. Although the breaker control power and trip circuits will not fully meet the seismic Category I installation and RG 1.75 separation requirements, the following considerations provide reasonable assurance for tripping of condensate pumps during a feedwater line break in the drywell:

- The control power and SSLC circuits are provided with isolation devices.
- The control power cables are installed in dedicated raceways. Adequate separation exists between control circuit raceways and other non-safety raceways.

- The design of the raceway supports is performed considering seismic loads throughout their routing.
- The safety-related breakers are located in a separate electrical room.
- The design of the safety-related breaker supports is performed considering seismic loads.
- The probability of trip and control power circuit failure is very low. Even in case of failure of non-safety power cable, the breaker trip circuit is expected to perform the safety function of tripping the condensate pump feeder breakers due to redundancy of trip coils, trip signals and control power supply.
- The design does not impact or degrade any other safety-related equipment or function.
- A reliability assessment for this design has been performed.

8.3.1.1.2.1 Power Centers

STD DEP 8.3-1

Power for 480V auxiliaries is supplied from power centers consisting of ~~6.9~~ 4.16 kV/480V transformers and associated metal clad switchgear (see Figure 8.3-1). There are at least two power centers in each Class 1E division.

8.3.1.1.4.1 120 VAC Class 1E Instrument Power System

STD DEP T1 2.12-2

Individual regulating transformers supply 120 VAC to the four divisions of instrument power (Figure 8.3-2). Each Class 1E divisional transformer is supplied from a 480V MCC in the same division, except for the Division IV transformer, which is supplied from the 480V MCC of Division II. There are three divisions (I, II, and III), each backed up by its associated divisional diesel generator as the source when offsite source is lost. Division IV is backed up by the Division II diesel generator, when the offsite source is lost. Power is distributed to the individual loads from distribution panels, and to logic level circuits through the control room logic panels. Transformers are sized to supply their respective distribution panel instrumentation and control loads.

8.3.1.1.5 Class 1E Electric Equipment Considerations

STD DEP Admin

(4) Capacity of switchgear, power centers with their respective transformers, motor control centers, and distribution panels is equal to or greater than the maximum available fault current to which it is exposed under all design modes of operation until the fault is cleared.

Interrupting capability of the Class 1E switchgear and MCC breakers is selected to interrupt the available short-circuit current at the circuit breaker load terminals. Short circuit analysis will be performed in accordance with IEEE 141 and/or other acceptable industry standards or practices to determine fault currents.~~ See Subsection 8.2.3(16) for interface requirement.~~

8.3.1.1.6.2 Grounding Methods

STD DEP 8.3-1

Station grounding and surge protection is discussed in Section 8A.1. The medium voltage ~~(6.9 kV)~~ system is low resistance grounded except that each diesel generator is high resistance grounded to maximize availability.

See Subsection 8.3.4.14 for COL license information pertaining to administrative control for bus grounding circuit ~~breakers~~ devices*.*

8.3.1.1.6.3 Bus Protection

STD DEP 8.3-1

Standard Supplement - NRC Bulletin 2012-01

Bus protection is as follows:

(1) ~~6.9 kV~~ Medium voltage *bus incoming circuits have inverse time over-current, ground fault, bus differential~~ and~~, under-voltage*, and negative sequence voltage *protection.*

(2) ~~6.9 kV~~ Medium voltage *feeders for power centers have instantaneous, inverse time over-current and ground fault protection.*

(3) ~~6.9 kV feeders for heat exchanger building substations have inverse time overcurrent and ground fault protection.~~ Not Used.

(4) ~~6.9 kV~~ Medium voltage *feeders used for motor starters have instantaneous, inverse time overcurrent, ground fault and motor protection.*

8.3.1.1.7 Load Shedding and Sequencing on Class 1E Buses

STD DEP 8.3-1

Standard Supplement - NRC Bulletin 2012-01

This subsection addresses Class 1E Divisions I, II, and III. Load shedding, bus transfer and sequencing on a ~~6.9~~ 4.16 *kV Class 1E bus is initiated on loss of bus voltage.*

*(1) **Loss of Preferred Power (LOPP)**—The ~~6.9~~* 4.16 *kV Class 1E buses are normally energized from the normal or alternate preferred power supplies. Should the bus voltage decay to ≤ 70% of its nominal rated value, a bus*

transfer is initiated and the signal will trip the supply breaker, and start the diesel generator. When the bus voltage decays to 30%, large pump motor breakers (~~6.9~~ 4.16 kV) are tripped.

(2) ***Loss of Coolant Accident (LOCA)****—When a LOCA occurs, the standby diesel generator is started and remains in the standby mode (i.e. voltage and frequency are within normal limits and no lockout exists) unless a LOPP signal is also present as discussed in (3) and (4) below. In addition, with or without a LOPP, the load sequence timers are started if the ~~6.9~~ 4.16 kV emergency bus voltage is greater than 70%, and loads are applied to the bus at the end of preset times.*

Each load has an individual load sequence timer which will start if a LOCA occurs and the ~~6.9~~ 4.16 kV emergency bus voltage is greater than 70%, regardless of whether the bus voltage source is normal or alternate preferred power or the diesel generator.

(5) ***LOCA when diesel generator is parallel with preferred power source during test****—If a LOCA occurs when the diesel generator is paralleled with either the normal preferred power or the alternate preferred power source, the D/G will automatically be disconnected from the ~~6.9~~ 4.16 kV emergency bus regardless of whether the test is being conducted from the local control panel or the main control room.*

(8) ***Protection against degraded voltage****—For protection of the Division I, II and III electrical equipment against the effects of a sustained degraded voltage, the ~~6.9~~ 4.16 kV divisional bus voltages are monitored.*

(9) ***Station Blackout (SBO) considerations****—A station blackout event is defined as the total loss of all offsite (preferred) and onsite Class IE AC power supplies except Class IE AC power generated through inverters from the station batteries. In such an event, the combustion turbine generator (CTG) will automatically start and achieve rated speed and voltage ~~within two~~ in less than ten minutes. The CTG will then automatically assume pre-selected loads on the plant investment protection (PIP) buses. With the diesel generators unavailable, the reactor operator will manually shed PIP loads and connect the non-Class 1E CTG with the required shutdown loads within ten minutes of the event initiation. Specifically, the operator will energize one of the Class 1E distribution system buses by closing each of the ~~two~~ circuit breakers (via controls in the main control room) between the CTG unit and the Class 1E bus. The ~~circuit breaker closest to the CTG is non-Class 1E and the~~ circuit breaker closest to the Class 1E bus is Class 1E, and the other breakers are non-Class 1E. Later, the operator will energize other safety-related and non-safety-related loads, as appropriate, to complete the shutdown process. See Appendix 1C and Subsection 9.5.11 for further information on Station Blackout and the CTG, respectively.*

(10) **Negative Sequence Voltage**—For protection of the Division I, II and III electrical equipment against the effects of an unbalanced power supply, the Class 1E 4.16 kV divisional busses are monitored for negative sequence voltage. If the bus negative sequence voltage increases to the setpoint, and after a time delay (to prevent triggering by transients), the respective feeder breakers trip open. The opening of the feeder breakers de-energizes the bus causing the undervoltage relays to actuate. The actuation of the undervoltage relays results in a start signal being sent to the diesel generator before any of the Class 1E loads experience degraded conditions exceeding those for which the equipment is qualified. The expected nominal setpoint is 4.5% (design limit is 5%) and the expected nominal time delay is 2.5 seconds (design limit is 3 seconds). Final setpoints are determined in accordance with the Setpoint Control Program. The time delay setting is defined to provide appropriate motor protection. This assures such loads will restart when the diesel generator assumes the degraded bus and sequences its loads. If the bus voltage recovers within the time delay period, the protective timer will automatically reset. Should a LOCA occur during the time delay, the feeder breaker with the negative sequence voltage will be tripped instantly. Subsequent bus transfer will be as described above. The negative sequence voltage relay output circuitry is separate from the output circuitry for the degraded grid and undervoltage relays in each of the Class 1E 4.16kV switchgear. At the feeder breakers, the contacts for the negative sequence voltage, degraded voltage, and undervoltage are connected in parallel to the trip coils of each feeder breaker.

8.3.1.1.8 Standby AC Power System

STD DEP Admin

See Subsections 9.5.13.8, 8.1.4.1, and 8.3.4.2 *for COL license information.*

8.3.1.1.8.1 Redundant Standby AC Power Supplies

STD DEP 8.3-1

Each standby power system division, including the diesel generator, its auxiliary systems and the distribution of power to various Class 1E loads through the ~~6.9~~ 4.16 *kV and 480V systems, is segregated and separated from the other divisions.*

8.3.1.1.8.2 Ratings and Capability

STD DEP 8.3-1

(5) Each diesel generator is sized to supply its post accident (LOCA) load requirements, and has a continuous load rating of ~~6.25~~ 9*MV·A @ 0.8 power factor (Figure 8.3-1). The overload rating is 110% of the rated output for a two-hour period out of a 24-hour period. A load profile analysis for each diesel generator will be performed in accordance with acceptable industry standards and/or practices.*

STP DEP 8.3-3

(12) The maximum loads expected to occur for each division (according to nameplate ratings) do not exceed ~~90%~~ 95% of the continuous power output rating of the diesel generator. See Table 8.3-1 for diesel generator loads applicable to each division.

STD DEP 8.3-1

(17) Bus voltage and frequency will recover to ~~6.9~~ 4.16 kV±10% at 60±2% Hz within 10 seconds following trip and restart of the largest load.

8.3.1.2 Analysis

STP DEP 1.1-2

STD DEP 8.3-1

STD DEP 9.5-1

(1) General Design Criteria (GDC):

(a) Criteria: GDCs 2, 4, 5, 17, 18 and 50.

(2) Regulatory Guides (RGs):

(f) RG 1.75—Physical Independence of Electric Systems

Regarding Position C-1 of Regulatory Guide 1.75 (Subsection 8.3.1.1.1), the non-Class 1E FMCRD motors are supplied power from the Division 1 Class 1E bus ~~through three dedicated power center transformers~~. The Class 1E load breakers or protective devices connected in series *for the bus* are*~~is~~ tripped by fault current for faults in the non-Class 1E load* prior to initiation of a trip of upstream breakers.*~~There is also a zone selective interlock provided from the load breaker to the Class 1E bus supply breaker so that the supply breaker is delayed from tripping while fault current is flowing in the non-Class 1E load feeder.~~ This meets the intent of the Regulatory Guide position ~~in that the main supply breaker is prevented from tripping on faults in the non-safety-related loads. The transfer switch downstream of the load feeder is associated, and meets Class 1E requirements.~~*

There are three ~~6.9~~ 4.16 *kV electrical divisions which are independent load groups backed by individual diesel-generator sets. The low voltage*

AC systems consists of four divisions which are backed by independent DC battery, charger and inverter systems.

(h) ~~*RG 1.108 - Periodic Testing of Diesel Generator Units Used as Onsite Electric Power Systems at Nuclear Power Plants*~~ Not Used

(I) RG 1.81 - Shared Emergency and Shutdown Electric Systems for Multi-Unit Nuclear Power Plants

STP 3 & 4 is a dual-unit station. Units 3 & 4 do not share AC or DC onsite emergency and shutdown electric systems. The onsite electric power systems are independent, separate, and designed with the capability of supplying minimum Engineered Safety Feature loads and loads required for attaining a safe and orderly cold shutdown of each unit, assuming a single failure and loss of offsite power.

(4) Other SRP Criteria:

(b) NRC Policy Issue On Alternate Power for Non-safety Loads

~~*The ABWR reserve auxiliary transformer has the same rating as the three unit auxiliary transformers, and therefore can assume the full load of any one unit auxiliary transformer (Subsection 8.2.1.2). The interconnection capability for the ABWR is such that any plant loads can be manually connected to receive power from any of the six sources (i.e., the two switching stations, the combustion turbine, and the three diesel generators). Administrative controls are provided to prevent paralleling of sources (Subsection 8.3.4.15). The ABWR therefore exceeds the requirements of the policy issue.*~~ Normal plant operating loads can be supplied by either the reserve or unit auxiliary transformers. Any non-safety power generation loads can be manually connected to receive power from any of the two sources (i.e., the two switching stations represented by the UATs and RATs) due to the interconnection capability for the ABWR. Any Plant Investment Protection (PIP) load can be manually connected to receive power from three sources (i.e., two switching stations and the CTG). Any Class 1E safety bus can be manually connected to receive power from four sources (i.e., two switching stations, the CTG, and the EDGs). Either the UATs or either of the RATs can supply the three Class 1E safety buses. Administrative controls are provided to prevent paralleling of sources (Subsection 8.3.4.15). The ABWR therefore exceeds the requirements of the policy issue.

8.3.2.1.2 Class 1E DC Loads

STD DEP T1 3.4-1

STD DEP 8.3-1

The 125 VDC Class 1E power is required for emergency lighting, diesel-generator field flashing, control and switching functions such as the control of ~~6.9 kV~~ medium voltage and 480V switchgear, control relays, meters and indicators, ~~multiplexers,~~ vital AC power supplies, as well as DC components used in the reactor core isolation cooling system.

8.3.2.1.3.1.1 Class 1E Electric Equipment Considerations

STD DEP Admin

(6) Breaker coordination analyses will be performed in accordance with IEEE 141, 242, and/or other acceptable industry standards or practices.

~~*See Subsection 8.3.4.6 for COL license information.*~~

8.3.2.1.3.5 Station Blackout

STD DEP Admin

Station blackout performance is discussed in Subsection 8.3.1.1.7(9) and Appendix 1C. See Subsections 9.5.13.19, 9.5.13.20, ~~and~~ 9.5.13.21, and 1C.4.1 for COL license information.

8.3.2.2.2 Regulatory Requirements

STP DEP 1.1-2

(2) Regulatory Guides (RGs)

(l) RG 1.81 - Shared Emergency and Shutdown Electric Systems for Multi-Unit Nuclear Power Plants

STP 3 & 4 is a dual-unit station. Units 3 & 4 do not share AC or DC onsite emergency and shutdown electric systems. The onsite electric power systems are independent, separate, and designed with the capability of supplying minimum Engineered Safety Feature loads and loads required for attaining a safe and orderly cold shutdown of each unit, assuming a single failure and loss of offsite power.

8.3.3.2.1S Testing of Power, Control, and Instrumentation Cables

Medium voltage power cables, 480 Vac, 120 Vac and 125/250 Vdc power cables, control cables, and instrumentation cables which are underground and which support equipment covered by the Maintenance Rule are monitored and the results trended

using techniques and at a frequency determined appropriate for the application based on a review of industry best practices.

8.3.3.5.1 Power, Instrumentation and Control Systems

NOTE: Associated lighting circuits are described in Section 9.5.3~~ and associated Fine Motion Control Rod Drive (FMCRD) circuits are described in Section 8.3.1.1.1.~~ Any other associated circuits added beyond those described above must be specifically identified and justified. Associated circuits are defined in Section 5.5.1 of IEEE-384, with the clarification for Items (3) and (4) that non- Class 1E circuits being in an enclosed raceway without the required physical separation or barriers between the enclosed raceway and the Class 1E or associated cables makes the circuits (related to the non-Class 1E cable in the enclosed raceway) associated circuits.

8.3.3.5.1.3 Raceway Identification

STD DEP 8.3-1

All conduit is tagged with a unique conduit number, in addition to the marking characteristics shown below, at 4.57m intervals, at discontinuities, at pull boxes, at points of entrance and exit of rooms and at origin and destination of equipment. Conduits containing cables operating at above 600V ~~(i.e., 6.9 kV)~~ are also tagged to indicate the operating voltage. These markings are applied prior to the installation of the cables.

8.3.3.6.1.1 Class 1E Electric Equipment Arrangement

(4) An independent raceway system is provided for each division of the Class 1E electric system. The raceways are arranged, physically, top to bottom, as follows (based on the function and the voltage class of the cables):

Note: V5 = Medium voltage power, 13.8 kV (15 kV insulation class) for non-Class 1E systems only.

(a) V4 = Medium voltage power, ~~6.9~~ 4.16 kV (~~8~~ 5 kV insulation class).

(5) Class 1E power system power supplies and distribution equipment (including diesel generators, batteries, battery chargers, CVCF power supplies, ~~6.9~~ 4.16 kV switchgear, 480V load centers, and 480V motor control centers) are located in areas with access doors that are administratively controlled.

8.3.3.6.2.2.4 Isolation Devices

STD DEP 8.3-1

Where electrical interfaces between Class 1E and non-Class 1E circuits or between Class 1E circuits of different divisions cannot be avoided, Class 1E isolation devices will be used.~~ AC isolation (the FMCRD drives on Division 1 is the only case) is provided~~

~~by Class1E interlocked circuit breaker coordination as described in Subsection 8.3.1.1.1.~~

8.3.3.9S Monitoring of Manholes

Manholes are provided with high water level alarms. Where appropriate, sump pumps are provided. Additionally, manholes are inspected every year to ensure water levels are below the lowest layer of cables, to confirm sump pump and alarm functionality, and to ensure proper seating of manhole covers. If warranted, manhole covers will be sealed to minimize water ingression.

8.3.4 COL License Information

8.3.4.1 Not Used

8.3.4.2 Diesel Generator Design Details

The following site-specific supplement addresses COL License Information Item 8.8.

Procurement documents for the emergency diesel generators will specify that the diesel generators will be capable of reaching full speed and voltage within 20 seconds after the signal to start and that the vendor's testing that demonstrates this capability will be witnessed by QA. Procedure(s) which implement the testing guidance provided in RG 1.9 and IEEE 387 will be developed before fuel load to test that each emergency diesel generator meets the requirement to reach full speed and voltage within 20 seconds after the start signal is initiated. These procedures will be developed consistent with the plant operating procedure development plan in Section 13.5. In addition, the Technical Specifications (see Chapter 16) require periodic retesting and verification that each emergency diesel generator meets this requirement. (COM 8.3-1)

8.3.4.3 Not Used

8.3.4.4 Protective Devices for Electrical Penetration Assemblies

The following site-specific supplement addresses COL License Information Item 8.10.

Procedure(s) will be developed before fuel load that demonstrates the functional capability of the electrical penetration assembly protective devices to perform their required safety functions. These procedures include periodic testing and calibration of the protective devices (except for fuses which will be inspected) to demonstrate their functional capability for the circuits that pass through the containment electrical penetrations assemblies and require special consideration as defined by IEEE-741. A sample of each different type of over current device is selected for periodic testing during refueling outages. The testing includes verification of thermal and instantaneous trip characteristics of molded case circuit breakers; verification of long time, short time, and instantaneous trips of medium voltage air circuit breakers; and verification of long time, short time, and instantaneous trips of low voltage air circuit breakers. The procedures will be developed before fuel load consistent with the plant operating procedure development plan in Section 13.5. (COM 8.3-2)

8.3.4.5 Not Used

8.3.4.6 Not Used

8.3.4.7 Not Used

8.3.4.8 Not Used

8.3.4.9 Offsite Power Supply Arrangement

The following site-specific supplement addresses COL License Information Item 8.15.

Procedure(s) that require one of three divisional buses to be fed from an alternate source during normal operation to prevent the simultaneous de-energization of all divisional buses on the loss of one offsite power supply, will be developed prior to fuel load. Technical Specifications limit operation when both of the reserve auxiliary transformers or all three (3) unit auxiliary transformers are inoperable. These procedures will be developed consistent with the plant operating procedure development plan in Section 13.5. (COM 8.3-3)

8.3.4.10 Not Used

8.3.4.11 Not Used

8.3.4.12 Not Used

8.3.4.13 Load Testing of Class 1E Switchgear and Motor Control Centers

The following site-specific supplement addresses COL License Information Item 8.19.

The availability of adequate voltage (+/-10%) at the device load from Class 1E switchgear and motor control centers for different operating scenarios will be determined by analysis. The electrical model for the analysis will be validated by site testing prior to fuel load. The capability of critical electrical equipment to operate within +/- 10% of nominal voltage will also be confirmed by vendor testing of the system components before shipment. (COM 8.3- 4)

8.3.4.14 Administrative Controls for Bus Grounding Circuit Devices

This subsection of the ABWR DCD is replaced in its entirety with the following site-specific supplement which addresses COL License Information Item 8.20.

Plant operating procedures will provide appropriate administrative controls to assure that bus grounding circuit devices are removed whenever the corresponding buses are energized. Operation and maintenance procedures, that provide directions to energize or deenergize high voltage electrical equipment, will also include instructions regarding bus grounding circuit devices to assure that they are in the correct position. These procedures will be developed prior to fuel load and be consistent with the plant operating procedure development plan in Section 13.5. (COM 8.3-5)

8.3.4.15 Administrative Controls for Manual Interconnections

The following site-specific supplement addresses COL License Information Item 8.21.

Plant operating procedure(s) to prevent paralleling of redundant onsite Class 1E power supplies from different buses and sources to power plant loads will be developed prior to fuel load. These procedures will be developed consistent with the plant operating procedure development plan in Section 13.5. (COM 8.3-6)

8.3.4.16 Not Used

8.3.4.17 Common Industrial Standards Referenced in Purchase Specifications

The following site-specific supplement addresses COL License Information Item 8.23.

The appropriate industrial standards, such as those listed in Subsection 8.3.5, for the assurance of quality manufacturing of both Class 1E and non-Class 1E equipment, will be referenced in the purchase documents.

8.3.4.18 Administrative Controls for Switching 125 VDC Standby Charger

The following site-specific supplement addresses COL License Information Item 8.24.

Plant operating procedure(s) and administrative key controls will be developed prior to fuel load to assure that all input and output circuit breakers for the standby battery charger are in the open position when the charger is not in use, and at least two circuit breakers in series are verified to be open between redundant divisions when the standby charger is placed into service (Section 8.3.2.1.3). The interlocks are also addressed in the single line diagrams (Figures 8.3-1). These procedures will be developed consistent with the plant operating procedure development plan in Section 13.5. (COM 8.3-7)

8.3.4.19 Control of Access to Class 1E Power Equipment

The following site-specific supplement addresses COL License Information Item 8.25.

Procedure(s) that contain appropriate administrative controls to limit access to Class 1E power equipment areas and Class 1E distribution panels, will be developed prior to fuel load. Class 1E power system power supplies and distribution equipment (including diesel generators, batteries, battery chargers, CVCF power supplies, 4.16 kV switchgear, 480 V load centers, 480 V motor control centers) are all located within the Vital Area areas and access is controlled accordingly. In addition, AC and DC distribution panels are located in the same areas or similar areas as Class 1E power supplies and distribution equipment or the distribution panels are capable of being locked, so that access to circuit breakers can be administratively controlled. These procedures will be developed consistent with the plant operating procedure development plan in Section 13.5. (COM 8.3-8)

8.3.4.20 Periodic Testing of Voltage Protection Equipment

The following site-specific supplement addresses COL License Information Item 8.26.

Procedure(s) which implement the testing requirements of RG 1.118 and IEEE 338 for the periodic testing of instruments, timers, and other electrical equipment designed to protect the distribution system from: (1) loss of offsite voltage, and (2) degradation of offsite voltage, will be developed prior to fuel load. These procedures will be developed consistent with the plant operating procedure development plan in Section 13.5. (COM 8.3-9)

8.3.4.21 Diesel Generator Parallel Test Mode

The following site-specific supplement addresses COL License Information Item 8.27.

Procedure(s) will be developed prior to fuel load which provide for the periodic testing of the diesel generator interlocks which restore units to emergency standby in the event of a LOCA or LOPP. Such procedures shall require that each diesel generator set be operated independently of the other sets, and be connected to the utility power system only by manual control during testing or for bus transfer. Also, such procedures shall require that the duration of the connection between the preferred power supply and the standby power supply shall be minimized in accordance with Section 6.1.3 of IEEE-308. These procedures will be developed consistent with the plant operating procedure development plan in Section 13.5 (COM 8.3-10)

8.3.4.22 Periodic Testing of Diesel Generator Protective Relaying

The following site-specific supplement addresses COL License Information Item 8.28.

Procedure(s) which implement the testing requirements of RG 1.9 and IEEE 387 for periodic testing of diesel generator protective relaying, bypass circuitry, and annunciation will be developed prior to fuel load. These procedures will be developed consistent with the plant operating procedure development plan in Section 13.5. (COM 8.3-11)

8.3.4.23 Periodic Testing of Diesel Generator Synchronizing Interlocks

The following site-specific supplement addresses COL License Information Item 8.29.

Procedure(s) which implement the testing requirements of RG 1.9 and IEEE 387 for periodic testing of diesel generator synchronizing interlocks, and to prevent incorrect synchronization whenever the diesel generator is required to operate in parallel with the preferred power supply will be developed prior to fuel load. These procedures will be developed consistent with the plant operating procedure development plan in Section 13.5. (COM 8.3-12)

8.3.4.24 Periodic Testing of Thermal Overloads and Bypass Circuitry

The following site-specific supplement addresses COL License Information Item 8.30.

Procedure(s) for the periodic testing of thermal overloads and associated bypass circuitry for Class 1E MOVs to the requirements of RG 1.106 will be developed prior to

fuel load. These procedures will be developed consistent with the plant operating procedure development plan in Section 13.5. (COM 8.3-13)

8.3.4.25 Periodic Inspection/Testing of Lighting Systems

The following site-specific supplement addresses COL License Information Item 8.31.

Procedure(s) for periodic inspection of all lighting systems installed in safety-related areas and in passageways leading to and from these areas and for periodic inspection of the lighting systems which are normally de-energized (e.g., DC-powered lamps), will be developed prior to fuel load. These procedures will be developed consistent with the plant operating procedure development plan in Section 13.5. (COM 8.3-14)

8.3.4.26 Controls for Limiting Potential Hazards into Cable Chases

The following site-specific supplement addresses COL License Information Item 8.32.

Procedure(s) to control and limit the introduction of potential hazards into cable chases and control room areas will be developed prior to fuel load. These procedures will be developed consistent with the plant operating procedure development plan in Section 13.5. (COM 8.3-15)

8.3.4.27 Periodic Testing of Class 1E Equipment Protective Relaying

The following site-specific supplement addresses COL License Information Item 8.33.

Procedure(s) for the periodic testing of all protective relaying and thermal overloads associated with Class 1E motors and switchgear will be developed prior to fuel load. These procedures will be developed consistent with the plant operating procedure development plan in Section 13.5. (COM 8.3-16)

8.3.4.28 Periodic Testing of CVCF Power Supplies and EPAs

The following site-specific supplement addresses COL License Information Item 8.34.

Procedure(s) for the periodic testing of CVCF power supplies (including alarms) and associated Electrical Protection Assemblies (EPAs) which provide power to the Reactor Protection System will be developed prior to fuel load. These procedures will be developed consistent with the plant operating procedure development plan in Section 13.5. (COM 8.3-17)

8.3.4.29 Periodic Testing of Class 1E Circuit Breakers

This subsection of the ABWR DCD is replaced in its entirety with the following site-specific supplement which addresses COL License Information Item 8.35.

Procedure(s) for the periodic calibration and functional testing of the fault interrupt capability of all Class 1E breakers; the fault interrupt coordination between supply and load breakers for each Class 1E load and each Division I non-Class 1E load will be developed prior to fuel load. These procedures will be developed consistent with the plant operating procedure development plan in Section 13.5. (COM 8.3-18)

8.3.4.30 Periodic Testing of Electrical Systems & Equipment

The following site-specific supplement addresses COL License Information Item 8.36.

Procedure(s) for the periodic testing of all Class 1E electrical systems and equipment in accordance with surveillance and test requirements of Section 7 of IEEE 308, will be developed prior to fuel load consistent with the plant operating procedure development plan in Section 13.5. (COM 8.3-19)

8.3.4.31 Not Used

8.3.4.32 Class 1E Battery Installation and Maintenance Requirements

The following site-specific supplement addresses COL License Information Item 8.38.

Procedure(s) for the installation, maintenance, testing and replacement of Class 1E station batteries which meet the requirements of IEEE 484 and Section 5 of IEEE 946, will be developed prior to fuel load. These procedures will be developed consistent with the plant operating procedure development plan in Section 13.5. (COM 8.3-20)

8.3.4.33 Periodic Testing of Class 1E Batteries

The following site-specific supplement addresses COL License Information Item 8.39.

Procedure(s) for the periodic testing of Class 1E station batteries in accordance with the requirements of Section 7 of IEEE 308 to ensure sufficient capacity and capability to supply power to their connected loads will be developed prior to fuel load. These procedures will be developed consistent with the plant operating procedure development plan in Section 13.5. (COM 8.3-21)

8.3.4.34 Periodic Testing of Class 1E CVCF Power Supplies

The following site-specific supplement addresses COL License Information Item 8.40.

Procedure(s) for the periodic testing of Class 1E constant voltage constant frequency (CVCF) power supplies to ensure sufficient capacity to supply power to their connected loads, will be developed prior to fuel load. These procedures will be developed consistent with the plant operating procedure development plan in Section 13.5. (COM 8.3-22)

8.3.4.35 Periodic Testing of Class 1E Battery Chargers

The following site-specific supplement addresses COL License Information Item 8.41.

Procedure(s) for the periodic testing of Class 1E battery chargers to ensure sufficient capacity to supply power to their connected loads will be developed prior to fuel load. These procedures will be developed consistent with the plant operating procedure development plan in Section 13.5. (COM 8.3-23)

8.3.4.36 Periodic Testing of Class 1E Diesel Generators

The following site-specific supplement addresses COL License Information Item 8.42.

Procedure(s) for the periodic testing and/or analysis of Class 1E diesel generators to demonstrate their capability to satisfy the criteria in Subsection 8.3.1.1.8.2, to supply the actual full design basis load current for each sequenced load step, and to manually start each diesel generator will be developed prior to fuel load. These procedures will be developed prior to fuel load consistent with the plant operating procedure development plan in Section 13.5. (COM 8.3-24)

8.3.5 References

STD DEP 8.3-1

~~*7.2 kV rated*~~ Medium voltage *metal-clad Switchgear*

Table 8.3-1 from the reference ABWR DCD is replaced in its entirety with the following.

Table 8.3-1 D/G Load Table—LOCA + LOPP

			Generator Connected Loads (kW)			
Sys. No	Load Description	Rating (kW)	A (Div I)	B (Div II)	C (Div III)	Note*
-----	Motor operated Valves	160x3	X	X	X	(2)
C12	FMCRD	432x1	432	–	–	
C41	SLC Pump	50x2	50	50	–	
E11	RHR Pump	589x3	589	589	589	
	Fill Pump	4x3	X	X	X	
E22	HPCF Pump	1689x2	–	1689	1689	
P21	RCW Pump (Div I, II)	389x4	778	778	–	
	(Div III)	300x2	–	–	600	
P25	HECW Pump	50x5	50	100	100	
	HECW Refrigerator	367x5	367	734	734	
P41	RSW Pump	530x6	1060	1060	1060	
R23	P/C Transformer Loss	30x6	60	60	60	
R42	DC 125V Charger (Div I,II,III)	98x3	98	98	98	
	(Div IV)	56x1	–	56	–	(3)
	125 VDC Standby Charger	98	98	–	98	
R46	Vital CVCF					
	(Div I,II,III)	28x3	28	28	28	
	(Div IV)	28	–	28	–	(3)
R47	Instrument and Control Power					
	(Div I,II,III)	40x3	40	40	40	
	(Div IV)	40	–	40	–	(3)
R52	Lighting	100x3	100	100	100	
T22	SGTS Fan	61x2	–	61	61	
	SGTS Heaters	26x2	–	26	26	
	SGTS Cooling Fan	4x2	–	4	4	
U41	CRHA Supply Fans	122x4	–	244	244	(5)
	CRHA HVAC Emergency Filter Unit Supply Fans	17x4	–	34	34	(5)
	CBSREA HVAC Supply Fans	61x6	122	122	122	(5)
	RBSREEHVAC Supply Fans	61x6	122	122	122	(5)
	RBSRDGHVAC Emergency Supply Fans	50x6	100	100	100	(5)

Table 8.3-1 D/G Load Table—LOCA + LOPP (Continued)

Sys. No	Load Description	Rating (kW)	Generator Connected Loads (kW) A (Div I)	B (Div II)	C (Div III)	Note*
	RBSREEHVAC Supply					
	Electrical Heating Coil	101x6	X	X	X	
	Cooling Tower Fan	208x6	416	416	416	
	UHS HVAC Fan	41x3	41	41	41	
	UHS Unit Heater	180x3	180	180	180	
Other Loads			174	140	131	
Total Connected Loads			5271	7306	7043	
Total Standby Loads and Short Time Loads			538	677	677	
Total Operating Loads			4733	6629	6366	

* See Table 8.3-3 for Notes

Table 8.3-3 Notes for Tables 8.3-1 and 8.3-2

(3) Div. IV ~~battery charger~~ is fed from Div. II motor control centers.

(4) Load description acronyms are interpreted as follows:

CRHA	Control Room Habitability Area
CBSREA	Control Building Safety-Related Equipment Area
~~*FCS*~~	~~*Flammability Control System*~~
RBSREEHVAC	Reactor Building Safety-Related Electrical Equipment HVAC System
RBSRDGHVAC	Reactor Building Safety-Related Diesel Generator HVAC System
UHS	Ultimate Heat Sink

Table 8.3-4 D/G Load Sequence Diagram Major Loads

	Block Time	Block 1 (20 s)	Block 2 (30 s)	Block 3 (35 s)	Block 4 (40 s)	Block 5 (45 s)	Block 6 (50 s)	Block 7 (55 s)	Block 8 (60 s)	Block 9 (After 65 s)
Mode	**Div.**									
LOCA Loads		*MOV*	*RHR Pump*	*RCW Pump*	*RCW Pump*	*RSW Pump*	*RSW Pump*	*SGTS*	*Chargers*	*SLC Pump* ~~*FCS*~~
LOCA & LOPP	I	*Inst. Tr Lighting FCMRD**	*DG HVAC*	*HECW Pump*		*R/B Emer. HVAC C/B Emer. HVAC*			*CVCFs*	*HECW Refrig*
		MOV	*RHR Pump*	*RCW Pump*	*RCW Pump*	*RSW Pump*	*RSW Pump*	*SGTS*	*Chargers*	*SLC Pump* ~~*FCS*~~
LOCA & LOPP	II	*HPCF Pump Inst. Tr Lighting*	*DG HVAC*	*HECW Pump*	*MCR HVAC*	*R/B Emer. HVAC C/B Emer. HVAC*			*CVCFs*	*HECW Refrig*
		MOV	*RHR Pump*	*RCW Pump*	*RCW Pump*	*RSW Pump*	*RSW Pump*		*Chargers*	*HECW Refrig*
LOCA & LOPP	III	*HPCF Pump Inst. Tr Lighting*	*DG HVAC*	*HECW Pump*	*MCR HVAC*	*R/B Emer. HVAC C/B Emer. HVAC*			*CVCFs*	

** FMCRDs are the only Non-Class 1E loads on the DG buses.*

The following figures are located in Chapter 21:

Figure 8.3-1 Electrical Power Distribution System SLD (Sheets 1- ~~3~~ 4)

Figure 8.3-2 Instrument and Control Power Supply System SLD

8.4S Station Blackout

For information pertaining to Station Blackout, refer to FSAR Appendix 1C.

8A Miscellaneous Electrical Systems

The information in this appendix of the reference ABWR DCD, including all Subsections and figures, is incorporated by reference with the following departures and supplements.

STP DEP 1.1-2 (Figure 8A-1)

STD DEP 8A.1-1

STD DEP Admin

8A.1.1 Description

STP DEP 1.1-2

STD DEP Admin (making the type of grounding consistent with ABWR DCD Subsections 8.3.1.0.6.2 and 8.3.1.1.6.2).

The electrical grounding system is comprised of:

(3) A plant grounding grid shared between STP Units 3 & 4

The onsite, medium-voltage AC distribution system is low *resistance grounded at the neutral point of the low-voltage windings of the unit auxiliary and reserve transformers.*

8A.1.2 Analysis

STD DEP 8A.1-1

~~*No SRP or regulatory guidance is provided for the grounding and lightning protection system.*~~ Regulatory guidance for the lightning protection system is provided in Regulatory Guide 1.204. ~~*It is*~~ The grounding and lightning protection systems are *designed and required to be installed to the applicable sections of the following codes and standards.*

(5) IEEE-666, Design Guide for Electric Power Service Systems for Generating Stations (Reference 8A-8)

(6) IEEE-1050, Guide for Instrumentation and Control Equipment Grounding in Generating Stations (Reference 8A-9)

(7) IEEE-C62.23, Application Guide for Surge Protection of Electric Generating Plants (Reference 8A-10)

8A.1.3 COL License Information

The following site-specific supplement addresses the COL License Information Item discussed in this subsection.

Ground resistance measurements will be performed per guidance provided by IEEE-81 to determine that the required value of one ohm or less has been met and additions

to the system will be made, if necessary, to meet the target resistance after site preparation and prior to construction of the permanent buildings. The FSAR will be updated in accordance with 10 CFR 50.71(e) to reflect the results of these evaluations. (COM 8A-1)

8A.2.3 COL License Information

The following standard supplement addresses the COL License Information Item discussed in this subsection.

The design of the cathodic protection system meets the following minimum requirements consistent with the requirements in Chapter 11, Section 9.4 of the Utility Requirements Document issued by the Electric Power Research Institute (Reference 8A-5).

(1) The need for cathodic protection on the entire site, portions of the site, or not at all is determined by analyses. The analyses are based on soil resistivity readings, water chemistry data, and historical data from the site gathered from before commencement of site preparation to the completion of construction and startup.

(2) Where large protective currents are required, a shallow interconnected impressed current system consisting of packaged high silicon alloy anodes and transformer-rectifiers are normally used. The rectifiers are approximately 50% oversized in anticipation of system growth and possible higher current consumption.

(3) The protected structures of the impressed current cathodic protection system are connected to the station grounding grid.

(4) Localized sacrificial anode cathodic protection systems are used where required to supplement the impressed current cathodic protection system and protect surfaces which are not connected to the station grounding grid or are located in outlying areas.

(5) Prepackaged zinc-type reference electrodes are permanently installed near poorly accessible protected surfaces to provide a means of monitoring protection level by measuring potentials.

(6) Test stations above grade are installed throughout the station adjacent to the areas being protected for termination of test leads from protected structures and permanent reference electrodes.

~~*8A.3.4*~~ 8A.4 References

STD DEP Admin

The following standard supplement addresses new references:

8A-8 IEEE-666, Design Guide for Electric Power Service Systems for Generating Stations

8A-9 IEEE-1050, Guide for Instrumentation and Control Equipment Grounding in Generating Stations

8A-10 IEEE-C62.23, Application Guide for Surge Protection of Electric Generating Plants

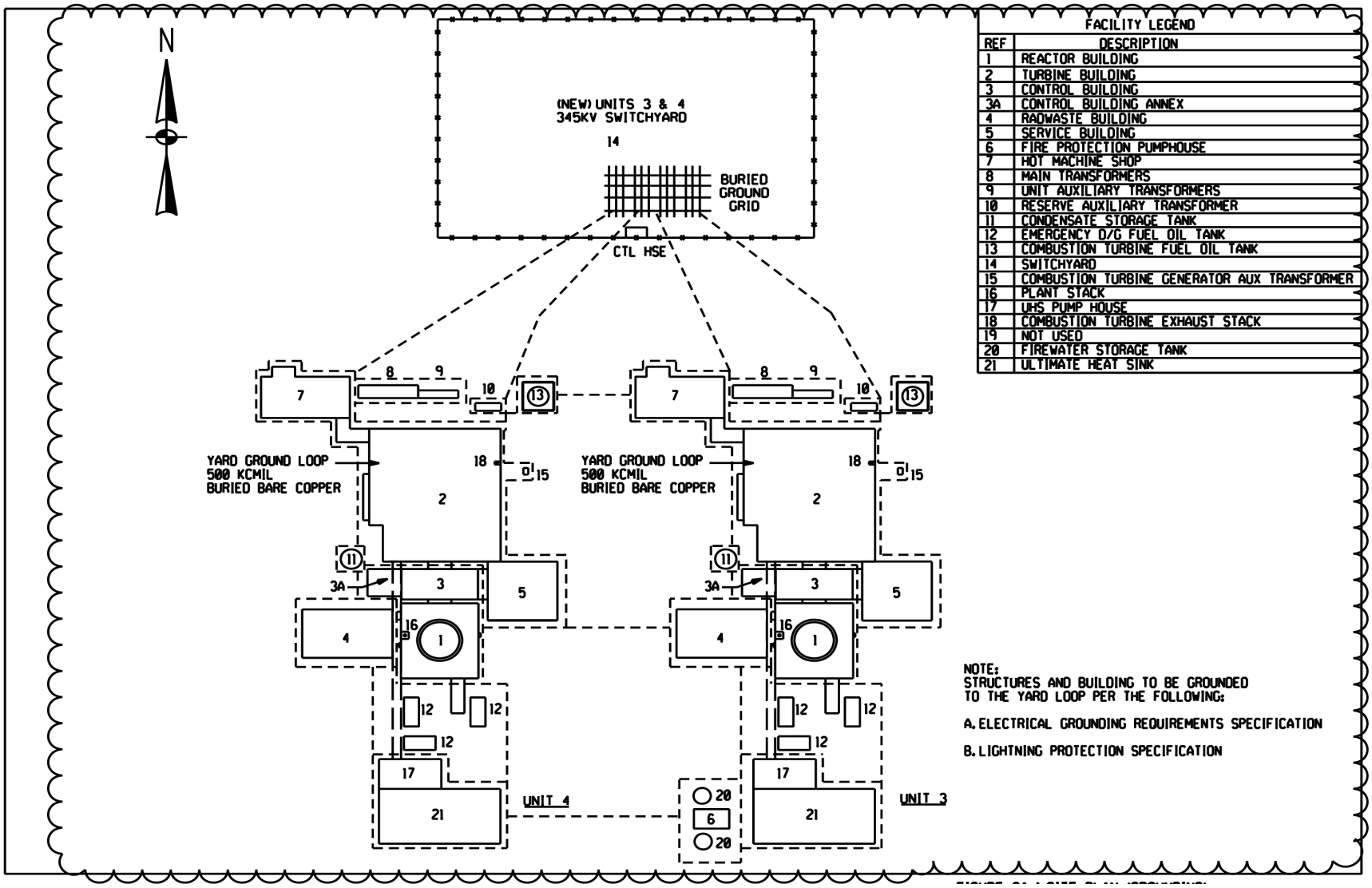

FACILITY LEGEND

REF	DESCRIPTION
1	REACTOR BUILDING
2	TURBINE BUILDING
3	CONTROL BUILDING
3A	CONTROL BUILDING ANNEX
4	RADWASTE BUILDING
5	SERVICE BUILDING
6	FIRE PROTECTION PUMPHOUSE
7	HOT MACHINE SHOP
8	MAIN TRANSFORMERS
9	UNIT AUXILIARY TRANSFORMERS
10	RESERVE AUXILIARY TRANSFORMER
11	CONDENSATE STORAGE TANK
12	EMERGENCY D/G FUEL OIL TANK
13	COMBUSTION TURBINE FUEL OIL TANK
14	SWITCHYARD
15	COMBUSTION TURBINE GENERATOR AUX TRANSFORMER
16	PLANT STACK
17	UHS PUMP HOUSE
18	COMBUSTION TURBINE EXHAUST STACK
19	NOT USED
20	FIREWATER STORAGE TANK
21	ULTIMATE HEAT SINK

Figure 8A-1 Site Plan (Grounding)

9.0 Auxiliary Systems

9.1 Fuel Storage and Handling

The information in this section of the reference ABWR DCD, including all subsections, tables and figures, as modified by the STP Nuclear Operating Company Application to Amend the Design Certification rule for the U.S. Advanced Boiling Water Reactor (ABWR), "ABWR STP Aircraft Impact Assessment (AIA) Amendment Revision 3," dated September 23, 2010, is incorporated by reference with the following departures and supplements.

STD DEP 9.1-1, Update of Fuel Storage and Handling Equipment (Tables 9.1-3, 9.1-4, 9.1-5, 9.1-6, 9.1-7, 9.1-8, 9.1-11, Figures 9.1-4, 9.1-5, 9.1-7, 9.1-8, 9.1-11, 9.1-12, and 9.1-14)

STD DEP T1 2.4-1, Connection of RHR Loop A to Fuel Pool Cooling. (Figure 9.1-1 Sheet 2 and Figure 9.1-2 Sheet 1 and 2)

STD DEP T1 2.4-1 is incorporated in Section 9.1.3. In addition, standard supplemental information is included in Subsection 9.1.6 to address COL license information items. The original DCD text is presented in *italics,* deletions are shown as ~~*strike-throughs*~~, and new text in underlined regular font. Table additions and deletions for departures have been incorporated using regular font for clarity. Tables 9.1-9, 9.1-10 and 9.1-12 have no changes from ABWR DCD. Figure changes are identified as deleted or modified content is captured in a cloud.

STP DEP T1 2.5-1, Elimination of New Fuel Storage Racks in New Fuel Vault (Table 9.1-8, Figure 9.1-14)

~~*The new fuel storage vault stores a 40% core load of new fuel assemblies. The fuel is stored in the new fuel storage racks in the vault, which is located as close as practicable to the spent fuel storage pool work area to facilitate handling during fuel preparation. The new fuel inspection stand is close to the new fuel storage vault to minimize fuel transport distance.*~~

Spent fuel removed from the reactor vessel must be stored underwater while awaiting disposition. Spent-fuel storage racks, which are used for this purpose, are located at the bottom of the fuel storage pool under sufficient water to provide radiological shielding. This pool water is processed through the Fuel Pool Cooling and Cleanup System (FPC) to provide cooling to the spent fuel in storage and for maintenance of fuel pool water quality. The spent-fuel pool storage capacity is a minimum of *270% of the reactor core.*

New fuel will be stored in the spent-fuel storage racks in the fuel storage pools.

~~*The new fuel and spent fuel storage racks are the same high density design. The new fuel racks can be used for either dry or submerged storage of fuel. The design of the new fuel racks will be described. Information on the spent fuel racks will only be presented when the design is different.*~~

9.1.1 New-Fuel Storage

9.1.1.1 Design Bases

9.1.1.1.1 Nuclear Design

STP DEP T1 2.5-1

See Subsection 9.1.2.1.1

~~*A full array of loaded new fuel racks is designed to be subcritical, by at least 5% Dk.*~~

~~*(1) Monte Carlo techniques are employed in the calculations performed to assure that keff does not exceed 0.95 under all normal and abnormal conditions.*~~

~~*(2) The assumption is made that the storage array is infinite in all directions. Since no credit is taken for neutron leakage, the values reported as effective neutron multiplication factors are, in reality, infinite neutron multiplication factors.*~~

~~*(3) The biases between the calculated results and experimental results, as well as the uncertainty involved in the calculations, are taken into account as part of the calculational procedure to assure that the specific keff limit is met.*~~

~~*The new fuel storage racks are purchased equipment. The purchase specification for these racks will require the vendor to provide the information requested in Question 430.180 on criticality analysis for the inadvertent placement of a fuel assembly in other than prescribed locations. See Subsection 9.1.6 9.1.6.1 for COL license information requirements.*~~

9.1.1.1.2 Storage Design

STP DEP T1 2.5-1

See Subsection 9.1.2.1.2

~~*The new fuel storage racks provided in the new fuel storage vault provide storage for 40% of one full core fuel load.*~~

9.1.1.1.3 Mechanical and Structural Design

See Subsection 9.1.2.1.3.

9.1.1.1.4 Thermal-Hydraulic Design

See Subsection 9.1.2.1.4.

9.1.1.1.5 Material Considerations

STP DEP T1 2.5-1

See Subsection 9.1.2.1.5.

9.1.1.1.6 Dynamic and Impact Analysis

STP DEP T1 2.5-1

~~*The new-fuel storage racks are purchased equipment. The purchase specification for the new-fuel storage racks will require the vendor to perform confirmatory dynamic analyses. The SSE input excitation for these analyses will utilize the horizontal and vertical response spectra provided in Subsection 3A.10.2.*~~

~~*Vertical impact analysis is required because the fuel assembly is held in the storage rack by its own weight without any mechanical holddown devices. Therefore, when the downward acceleration of the storage rack exceeds 1g, contact between the fuel assembly and the storage rack is lost. Horizontal impact analysis is required because a clearance exists between the fuel assembly and the storage rack walls.*~~

See Subsection 9.1.6.2 for COL license information requirements.

9.1.1.1.7 Not Used

9.1.1.2 Facilities Description (New-Fuel Storage Vault)

STP DEP T1 2.5-1

(1) The new-fuel storage vault is located on the refueling floor of the Reactor Building (R/B) (see Figure 1.2-12).

(2) The R/B, a Seismic Category I building, protects the new fuel from seismic events and externally generated missiles. There are no non-seismic systems, high or moderate energy pipes, or rotating machinery located in the vicinity of the new-fuel storage vault.

(3) The R/B HVAC system monitors the building exhausts for radioactivity. If radioactivity is encountered, the system is isolated and the SGTS starts operation. This prevents the possible release of radioactivity from any fuel handling accident.

(4) Not Used.~~*The new-fuel storage racks are top-entry racks designed to preclude the possibility of criticality under normal and abnormal conditions. The upper tieplate of the fuel element rests against the module to provide lateral support. The lower tieplate sits in the bottom of the rack, which supports the weight of the fuel.*~~

(5) Not Used.~~*The rack arrangement is designed to prevent accidental insertion of fuel assemblies or bundles between adjacent racks. The storage rack is designed to provide accessibility to the fuel bail for grappling purposes.*~~

(6) The floor of the new-fuel storage vault is sloped to a drain located at the low point. This drain removes any water that may be accidentally and unknowingly introduced into the vault. The drain is part of the floor drain subsystem of the Liquid Radwaste System.

(7) The radiation monitoring equipment for the new-fuel storage areas is described in Subsection 12.3.4.

9.1.1.3 Safety Evaluation

9.1.1.3.1 Criticality Control

STP DEP T1 2.5-1

See Subsection 9.1.2.3.1

~~*The design of the new-fuel storage racks provides for an effective multiplication factor (keff) for both normal and abnormal storage conditions equal to or less than 0.95 in the new-fuel storage racks. To ensure that design criteria are met, the following normal and abnormal new-fuel storage conditions were analyzed:*~~

~~*(1) Normal positioning in the new fuel array*~~

~~*(2) Eccentric positioning in the new fuel array*~~

~~*The new-fuel storage area will accommodate fuel (kinf < 1.35 at 20°C in standard core geometry) with no safety implications.*~~

9.1.1.3.2 Structural Design

STP DEP T1 2.5-1

See Subsection 9.1.2.3.2

~~*(1) The new-fuel vault contains one or more fuel storage racks which provides storage for fuel a maximum of 40% of one full core fuel load.*~~

~~*(2) The new-fuel storage racks are designed to be freestanding (i.e., no supports above the base). This means that the support structure also provides the required dynamic stability.*~~

~~*(3) The racks include individual solid tube storage compartments which provide lateral restraints over the entire length of the fuel assembly.*~~

~~*(4) The weight of the fuel assembly or bundle is supported axially by the rack lower support.*~~

~~*(5) The racks are fabricated from materials used for construction, in accordance with the latest applicable ASTM specifications.*~~

~~(6) Lead-in guides at the top of the storage spaces provide guidance of the fuel during insertion.~~

~~(7) The racks are designed to withstand, while maintaining the nuclear safety design basis, the impact force generated by the vertical free-fall drop of a fuel assembly from a height of 1.8 meters.~~

~~(8) The rack is designed to withstand a pullup force of 17.79 kN and a horizontal force of 4.45 kN.~~

~~(9) The new fuel storage racks require no periodic special testing or inspection for nuclear safety purposes.~~

9.1.1.3.3 Protection Features of the New-Fuel Storage Facilities

STD DEP 9.1-1

STP DEP T1 2.5-1

The new-fuel storage vault is housed in the Reactor Building. The vault and Reactor Buildings are Seismic Category I, and are designed to withstand natural phenomena such as tornadoes, tornado missiles, floods and high winds. Fire protection features are described in Subsection 9.5.1 and Appendix 9A.

~~*Procedural fuel handling requirements and equipment design dictate that no more than one bundle at a time can be handled over the storage racks and at a maximum height of 1.8m above the upper rack. Therefore, the racks cannot be displaced in a manner causing critical spacing as a result of impact from a falling object.*~~

The auxiliary hoist on the Reactor Building crane can traverse the full length of the refueling floor. This hoist ~~is~~ can be *used to move new fuel from the entry point into the Reactor Building~~,~~* and *up the main equipment hatch to the refueling floor~~ and from there to the new-fuel storage vault~~. This hoist can move fuel to the new-fuel inspection stand and ~~rechanneling area~~* to the fuel preparation machine *at the end of the spent-fuel storage pool.*

Should it become necessary to move major loads along or over the pools, administrative controls require that the load be moved over the empty portion of the spent-fuel pool and avoid the area of the new-fuel storage vault. The shipping cask cannot be lifted or moved above the new-fuel vault because of their relative locations on the refueling floor.

9.1.2 Spent-Fuel Storage

9.1.2.1 Design Bases

9.1.2.1.1 Nuclear Design

A full array in the loaded spent-fuel rack is designed to be subcritical, by at least 5% Δk. Neutron-absorbing material, as an integral part of the design, is employed to

assure that the calculated k_{eff}, including biases and uncertainties, will not exceed 0.95 under all normal and abnormal conditions.

9.1.2.1.2 Storage Design

The fuel storage racks provided in the spent-fuel storage pool provide storage for a minimum of *270% of one full core fuel load.*

9.1.2.1.3 Mechanical and Structural Design

The spent-fuel storage racks in the Reactor Building contain storage space for fuel assemblies (with channels) or bundles (without channels). They are designed to withstand all credible static and seismic loadings. The racks are designed to protect the fuel assemblies and bundles from excessive physical damage which may cause the release of radioactive materials in excess of 10 CFR 20 and 10 CFR 100 requirements, under normal and abnormal conditions caused by impacting from either fuel assemblies, bundles or other equipment.

The spent-fuel pool is a reinforced concrete structure with a 6.35 mm thick stainless steel liner. The fuel storage pool liner seismic classification is provided in Table 3.2-1. The bottom of all pool gates are sufficiently high to maintain the water level over the spent-fuel storage racks to provide adequate shielding and cooling. All pool fill and ~~drain~~ discharge *lines enter the pool above the safe shielding water level. Redundant anti-siphon ~~vacuum breakers are located at the high point of the pool circulation lines~~* protection is provided *to preclude a pipe break from siphoning the water from the pool and jeopardizing the safe water level* by locating two holes in each pool recirculation line at 10 mm and 510 mm below the lowest normal water level*.*

The racks are constructed in accordance with a quality assurance program that ensures that the design, construction and testing requirements are met.

The fuel storage racks are designed to handle irradiated fuel assemblies. The expected radiation levels are well below the design levels.

In accordance with Regulatory Guide 1.29, the fuel storage racks are Seismic Category I. The structural integrity of the rack will be demonstrated for the load combinations described in SRP 3.8.4, Appendix D. ~~*The structural integrity of the rack will be demonstrated for the load combinations described below using linear elastic design methods.*~~

~~*The applied loads to the rack are:*~~

~~*(1) Dead loads, which are weight of rack and fuel assemblies, and hydrostatic loads*~~

~~*(2) Live loads – effect of lifting an empty rack during installation*~~

~~*(3) Thermal loads – the uniform thermal expansion due to pool temperature changes*~~

~~(4) Seismic forces of the SSE~~

~~(5) Accidental drop of fuel assembly from maximum possible height 1.8m above rack~~

~~(6) Postulated stuck fuel assembly causing an upward force of 13.35 kN~~

~~The load combinations considered in the rack design are:~~

~~(7) Live loads~~

~~(8) Dead loads plus SSE~~

~~(9) Dead loads plus fuel drop~~

Thermal loads are not included in the above combinations because they are negligible due to the design of the rack (i.e., the rack is free to expand/contract under pool temperature changes).

The loads experienced under a stuck fuel assembly condition are typically less than those calculated for the seismic conditions and, therefore, need not be included as a load combination.

The storage racks are designed to counteract the tendency to overturn from horizontal loads and to lift from vertical loads. The analysis of the rack assumes an adequate supporting structure, and loads were generated accordingly.

Stress analyses will be performed by the vendor using classical methods based upon shears and moments developed by ~~the~~ an acceptable *dynamic* analysis *method. Using the given loads, load conditions and analytical methods, stresses will be calculated at critical sections of the rack and compared to acceptance criteria referenced in ASME Section III, Subsection NF. ~~Compressive stability will be calculated according to the AISI code for light gauge structures.~~*

The loads in the three orthogonal directions are considered to be acting simultaneously in a single analysis *and are combined ~~using the SRSS method suggested i~~n* accordance with *Regulatory Guide 1.92.*

Under fuel drop loading conditions, the acceptance criterion is that, although deformation may occur, k_{eff} must remain ≤0.95. The rack is designed such that, should the drop of a fuel assembly damage the tubes and dislodge a plate of poison material, the k_{eff} would still be ≤0.95 as required.

The effect of the gap between the fuel and the storage tube is taken into account on a local effect basis. Dynamic response analysis has shown that the fuel contacts the tube over a large portion of its length, thus preventing an overloaded condition of both fuel and tube.

The vertical impact load of the fuel onto its seat is considered conservatively as being slowly applied without any benefit for strain rate effects. See Subsection 9.1.6.7 for COL license information requirements.

9.1.2.1.4 Thermal-Hydraulic Design

The fuel storage racks are designed to provide sufficient natural convection coolant flow to remove decay heat without reaching excessive water temperatures (100°C).

In the spent-fuel storage pool, the bundle decay heat is removed by recirculation flow to the fuel pool cooling heat exchanger to maintain the pool temperature. Although the design pool exit temperature to the fuel pool cooling heat exchanger is far below boiling, the coolant temperature within the rack is higher, depending on the naturally induced bundle flow which carries away the decay heat generated by the spent fuel. The purchase specification for the fuel storage racks requires the vendor to perform the thermal-hydraulic analyses to evaluate the rate of naturally circulated flow and the maximum rack water exit temperature. Holtec International Licensing Report HI-2135462, Chapter 5, Thermal-Hydraulic Evaluation, provides the required analyses. *See Subsection 9.1.6.8 for COL license information requirements.*

9.1.2.1.5 Material Considerations

All structural material used in the fabrication of the fuel storage racks is in accordance with the latest issue of the applicable ASTM specification at the time of equipment order. This material is chosen due to its corrosion resistance and its ability to be formed and welded with consistent quality. The normal pool water operating temperatures are 16°C to 66°C.

The storage tube material is permanently marked with identification traceable to the material certifications. The fuel storage tube assembly is compatible with the environment of treated water and provides a design life of 60 years.

9.1.2.2 Facilities Description (Spent-Fuel Storage)

(1) The spent-fuel storage pool is located in the R/B (Figure 1.2-12).

(2) The R/B is a Seismic Category I building protecting the spent fuel from seismic events and externally generated missiles. There are no non-seismic systems, high or moderate energy pipes, or rotating machinery located in the vicinity of the spent-fuel pool or cask loading area on the refueling floor.

(3) The spent-fuel storage and adjacent cask loading area are separated by Seismic Category I gates. These gates isolate the cask loading area from the spent-fuel pool. The gates between the spent-fuel pool and other pools are all Seismic Category I.

(4) The shipping cask is placed in a walled off and drained portion of the spent-fuel pool. The drained volume is flooded, and the Seismic Category I gates removed. The spent fuel is then transferred. This process is reversed to remove the cask. The ratio of the two volumes is such that failure of the gates

will not lower water level enough to be unacceptable. Interlocks on the main crane prevent the shipping cask from being carried over any other portion of the spent-fuel storage pool.

(5) The spent fuel storage racks provide storage in the R/B spent-fuel pool for spent fuel received from the reactor vessel during the refueling operation. The spent-fuel storage racks are top-entry racks designed to preclude the possibility of criticality under normal and abnormal conditions. The upper tieplate of the fuel elements rests against the rack to provide lateral support. The lower tieplate sits in the bottom of the rack, which supports the weight of the fuel.

(6) The rack arrangement is designed to prevent accidental insertion of fuel assemblies or bundles between adjacent modules. The storage rack is designed to provide accessibility to the fuel bail for grappling purposes.

9.1.2.3 Safety Evaluation

9.1.2.3.1 Criticality Control

The spent-fuel storage racks are purchased equipment. The purchase specification for the spent-fuel storage racks will require the vendor to provide the information requested in Question 430.190 on criticality analysis of the spent-fuel storage, including the uncertainity value and associated probability and confidence level for the k_{eff} value. See Subsection 9.1.6.3 for COL license information requirements.

9.1.2.3.2 Structural Design and Material Compatibility Requirements

(1) The spent-fuel pool racks provide storage for a minimum of *270% of the reactor core.*

(2) The fuel storage racks are designed to be supported ~~*above*~~ vertically by *the pool floor* ~~*by a support structure*~~*. The* ~~*support*~~ fuel storage rack ~~*structure*~~ *allows sufficient pool water flow for natural convection cooling of the stored fuel.* ~~*Since the*~~ The fuel rack *modules are freestanding (i.e.,* ~~*no supports above the base*~~ the racks are not attached to the floor and can be removed*),* ~~*the support structure also provides the required dynamic stability.*~~ The spent fuel rack modules are interconnected at the top with crosses between inner modules and with external tube supports around the peripheral modules. The complete spent fuel rack arrangement leaves a small clearance gap to the pool walls. These supports provide the spent fuel rack dynamic stability.

(3) The racks include individual solid tube storage compartments, which provide lateral restraints over the entire length of the fuel assembly or bundle.

(4) The racks are fabricated from materials used for construction and are specified in accordance with the latest issue of applicable ASTM specifications at the time of equipment order.

(5) ~~Lead-in guides at the top of the storage spaces provide guidance of the fuel during insertion.~~Not used.

(6) The racks are designed to withstand, while maintaining the nuclear safety design basis, the impact force generated by the vertical free-fall drop of a fuel assembly from a height of 1.8m.

(7) The rack is designed to withstand a pullup force of 17.79 kN and a horizontal force of 4.45 kN.

(8) The fuel storage racks are designed to handle irradiated fuel assemblies. The expected radiation levels are well below the design levels.

The fuel storage facilities will be designed to Seismic Category I requirements to prevent earthquake damage to the stored fuel.

The fuel storage pools have adequate water shielding for the stored spent fuel. Adequate shielding for transporting the fuel is also provided. Liquid level sensors are installed to detect a low pool water level, and adequate makeup water is available to assure that the fuel will not be uncovered should a leak occur.

Since the fuel storage racks are made of noncombustible materials and are stored under water, there is no potential fire hazard. The large water volume also protects the spent-fuel storage racks from potential pipe breaks and associated jet impingement loads.

Fuel storage racks are made in accordance with the latest issue of the applicable ASTM specification at the time of equipment order. The storage tubes are permanently marked with identification traceable to the material certifications. The fuel storage tube assembly is compatible with the environment of treated water and provides a design life of 60 years, including allowances for corrosion.

Regulatory Guide 1.13 is applicable to spent-fuel storage facilities. The Reactor Building contains the fuel storage facilities, including the storage racks and pool, and is designed to protect the fuel from damage caused by:

(1) Natural events such as earthquake, high winds and flooding

(2) Mechanical damage caused by dropping of fuel assemblies bundles, or other objects onto stored fuel

9.1.2.4 Summary of Radiological Considerations

By adequate design and careful operational procedures, the safety design bases of the spent-fuel storage arrangement are satisfied. Thus, the exposure of plant personnel to radiation is maintained well below published guideline values. Further details of radiological considerations, including those for the spent-fuel storage arrangement, are presented in Chapter 12.

The pool liner leakage detection system and water level monitoring system, including the corrective action for loss of heat removal capability, are discussed in Subsection 9.1.3. The radiation monitoring system and the corrective action for excessive radiation levels are discussed in Subsections 11.5.2.1.2 and 11.5.2.1.3.

9.1.3 Fuel Pool Cooling and Cleanup System

9.1.3.1 Design Bases

The Fuel Pool Cooling and Cleanup (FPC) System is a non-safety-related system designed to remove the decay heat from the fuel pool, maintain pool water level and quality and remove radioactive materials from the pool to minimize the release of radioactivity to the environs.

The FPC System shall*:*

(1) Minimize *corrosion product buildup and shall control water clarity, so that the fuel assemblies can be efficiently handled underwater.*

(2) Minimize *fission product concentration in the water which could be released from the pool to the Reactor Building environment.*

(3) Monitor *fuel pool water level and maintain a water level above the fuel sufficient to provide shielding for normal building occupancy.*

(4) Maintain the pool water temperature below 52°C under normal operating conditions. The temperature limit of 52°C is set to establish an acceptable environment for personnel working in the vicinity of the fuel pool. The design basis for the FPC System is to provide cooling after closure of the fuel gates at the completion of refueling (21 days after shutdown). The normal design basis heat load at this time is the sum of decay heat of the most recent 35% spentfuel batch plus the heat from the previous four fuel batches after closure of the fuel gates. The Residual Heat Removal (RHR) System *~~RHR System~~ will be used to supplement the FPC System under the maximum* heat *load condition as defined in Subsection 9.1.3.2.*

9.1.3.2 System Description

The FPC System (Figures 9.1-1 and 9.1-2, and Table 9.1-11) maintains the spent-fuel storage pool below the desired temperature at an acceptable radiation level and at a degree of clarity necessary to transfer and service the fuel bundles.

The FPC System cools the fuel storage pool by transferring the spent fuel decay heat through two 6.91 GJ/h heat exchangers to the Reactor Building ~~Closed~~ Cooling Water (RCW) System. Each of the two heat exchangers is designed to transfer one half of the system design heat load. The FPC System utilizes two parallel 250 m^3/h pumps to provide a system design flow of 500 m^3/h. Each pump is suitable for continuous duty operation. The equipment is located in the Reactor Building.

The system pool water temperature is maintained at or below 52°C. The decay heat released from the stored fuel is transferred to the RCW System. During refueling prior to 21 days following shutdown, the reactor (shutdown cooling) and fuel pool cooling are provided jointly by the RHR and FPC Systems in parallel. The reactor cavity communicates with the fuel pool, since the reactor well is flooded and the fuel gates are open. RHR suction is taken from the vessel shutdown suction lines, pumped through RHR heat exchangers and discharged into the upper pools to improve water clarity for refueling. For the FPC System, fuel pool water is circulated by means of overflow through skimmers around the periphery of the pool and a scupper at the end of the transfer pool drain tanks, pumped through the FPC heat exchangers and filter-demineralizers and back to the pool through the pool diffusers.

After 21 days the fuel pool heat exchangers are capable of maintaining the spent fuel pool temperature below 52°C at the normal heat load from the decay heat of the most recent 35% batch of discharged fuel plus the 4 previous batches stored in the pool. If the fuel pool gates are installed prior to 21 days, or if more than 35% of the most recent batch of fuel is stored in the pool (maximum heat load condition) it may be necessary to utilize one of the three *RHR* ~~*systems*~~ loops *to supplement the cooling of the spent fuel pool. Supplemental cooling from RHR can be achieved by aligning the* ~~*RHR*~~ A*, B*, *or C* loop *in the fuel pool cooling mode. In the fuel pool cooling mode of RHR a suction is taken from the skimmer surge tanks, passed through an RHR heat exchanger, and returned to the fuel pool.* ~~*In the event one of the RHR systems is aligned in the fuel pool cooling mode it is permissible for that system to be counted as one of the minimum required Emergency Core Cooling systems during shutdown (Modes 4 or 5) as long as the system can be manually realigned and the system is otherwise operable.*~~

Clarity and purity of the pool water are maintained by a combination of filtering and ion exchange. The filter-demineralizers maintain suspended solids below 1.0 ppm, *total corrosion product metals* ~~*at*~~ below *30 ppb,* ~~*or less with*~~ and the *pH range of 5.6 to 8.6 at 25°C for compatibility with fuel storage racks and other equipment. Conductivity is maintained at less than 1.2 μS/cm at 25°C and chlorides less than 20 ppb. Each filter unit in the filter-demineralizer subsystem has adequate capacity to maintain the desired purity level of the pools under normal operating conditions. The flow rate is designed to be* ~~*approximately*~~ *that required for two complete water changes per day for the fuel transfer and storage pools. The maximum system flow rate is twice that needed to maintain the specified water quality.*

The FPC System is designed to remove suspended or dissolved impurities from the following sources:

(1) Dust or other airborne particles

(2) Surface dirt dislodged from equipment immersed in the pool

(3) Crud and fission products emanating from the reactor or fuel bundles during refueling

(4) Debris from inspection or disposal operations

(5) Residual cleaning chemicals or flush water

A post-processed strainer in the effluent stream of the filter-demineralizer limits the migration of filter material. The filter-holding element can withstand a differential pressure greater than the developed pump head for the system.

The filter-demineralizer units are located separately in shielded cells with enough clearance to permit removing filter elements from the vessels.

Each cell contains only the filter-demineralizer and piping. All valves (inlet, outlet, recycle, vent, drain, etc.) are located on the outside of one shielding wall of the room, together with necessary piping and headers, instrument elements and controls. Penetrations through shielding walls are located so as not to compromise radiation shielding requirements.

The filter-demineralizers are controlled from a local panel. A differential pressure and conductivity instruments provided for each filter-demineralizer unit indicate when backwash is required. Suitable alarms, differential pressure indicators and flow indicators monitor the condition of the filter-demineralizers.

System instrumentation is provided for both automatic and remote-manual operations. A low–low level switch stops the circulating pumps when the fuel pool skimmer-surge tank reserve capacity is reduced to the volume that can be pumped in approximately one minute with one pump at rated capacity (250 m^3/h). A level switch is provided in the fuel pool to alarm locally and in the control room on high and low level. Temperature elements are provided to display and alarm pool temperature and inlet temperature to the filter-demineralizers in the main control room. In addition, leakage flow detectors in the pool drains and pool liners are provided and alarmed in the control room.

The circulating pumps are controlled from the control room and a local panel. Pump low suction pressure automatically shuts off the pumps. A pump low discharge pressure alarm is indicated in the control room and on the local panel. The circulating pump motors are powered from the normal offsite sources backed by the combustion turbine generators.

The water level in the spent-fuel storage pool is maintained at a height sufficient to provide shielding for normal building occupancy. Radioactive particulates removed from the fuel pool are collected in filter-demineralizer units which are located in shielded cells. For these reasons, the exposure of plant personnel to radiation from the FPC System is minimal. Further details of radiological considerations for this system are provided in Chapter 12.

The circulation patterns within the reactor well and spent-fuel storage pool are established by placing the diffusers and skimmers so that particles dislodged during refueling operations are swept away from the work area and out of the pools.

Check valves prevent the pool from siphoning in the event of a pipe rupture.

Heat from pool evaporation is handled by the building ventilation system. Makeup water is provided through a remote-operated valve.

9.1.3.3 Safety Evaluation

The maximum possible heat load for the FPC System upon closure of the fuel gates (21 days) is the decay heat of the full core load of fuel at the end of the fuel cycle plus the remaining decay heat of the spent fuel discharged at previous refuelings upon closure of the fuel gates ; the maximum capacity of the spent-fuel storage pool is taken as *270% of a core* for the bounding heat load evaluation. For a spent fuel storage pool having a capacity greater than 270% (i.e., greater than 2354 fuel assemblies), the additional capacity may not be utilized without revision to the bounding heat load evaluation. *The temperature of the fuel pool water may be permitted to rise to approximately 60°C under these conditions. During cold shutdown conditions, if it appears that the fuel pool temperature will exceed 52°C, the operator can connect the FPC System to the RHR System. Combining the capacities enables the two systems to keep the water temperature below 52°C. The RHR System will be used only to supplement the fuel pool cooling when the reactor is shut down. The reactor will not be started up whenever portions of the RHR System are needed to cool the fuel pool.*

These connections may also be utilized during emergency conditions to assure cooling of the spent fuel regardless of the availability of the FPC System. The volume of water in the storage pool is such that there is enough heat absorption capability to allow sufficient time for switching over to the RHR System for emergency cooling.

During the initial stages of refueling, the reactor cavity communicates with the fuel pool, since the reactor well is flooded and the fuel pool gates are open. Decay heat removal is provided jointly by the RHR and FPC Systems and the pool temperature kept below 60°C. Evaluation studies concluded that after 150 hours decay following shutdown (fuel pool gates open*), the combined decay heat removal capacity of the 1-RHR and 1-FPC heat exchangers (single active failure postulated) can keep the pool temperature well below 60°C. The RHR-FPC joint decay heat removal performance evaluation is shown in Table 9.1-12.*

The spent-fuel storage pool is designed so that no single failure of structures or equipment will cause inability to:

(1) Maintain irradiated fuel submerged in water

(2) Re-establish normal fuel pool water level

(3) Remove decay heat from the pool

In order to limit the possibility of pool leakage around pool penetrations, the pool is lined with stainless steel. In addition to providing a high degree of integrity, the lining is designed to withstand possible abuse when equipment is moved. No inlets, outlets or drains are provided that might permit the pool to be drained below a safe shielding level, i.e. below a point 3m above the top of active fuel located in the spent fuel storage racks. Lines extending below this level are equipped with siphon breakers, check

valves, or other suitable devices to prevent inadvertent pool drainage. Interconnected drainage paths are provided behind the liner welds. These paths are designed to:

(1) Prevent pressure buildup behind the liner plate

(2) Prevent the uncontrolled loss of contaminated pool water to other relatively cleaner locations within the containment or fuel-handling area

(3) Provide liner leak detection and measurement

These drainage paths are designed to permit free gravity drainage to the equipment drain tanks or sumps of sufficient capacity and/or pumped to the Radwaste Building.

~~*A makeup water system*~~The Makeup Water Condensate System(MUWC)~~*and*~~ in conjunction with *pool water level instrumentation* ~~*are provided*~~ provide normal makeup water *to replace evaporative and leakage losses* from the fuel pool. ~~*Makeup water during normal operation will be supplied from condensate*~~ *The Suppression Pool Cleanup (SPCU) System can also be used as a Seismic Category I source of makeup water in case of failure of* ~~*the normal Makeup Water System*~~ MUWC makeup capability.

Both FPC and SPCU Systems are Seismic Category I, Quality Group C design with the exception of the filter-demineralizer portion, which is shared by both systems. Following an accident or seismic event, the filter-demineralizers are isolated from the FPC cooling portion ~~*and the SPCU System*~~ *by two block valves in series at* ~~*both*~~ *the inlet and* one block valve and one check valve at the *outlet of the common filter-demineralizer* ~~*portion*~~ piping*. Seismic Category I, Quality Group C bypass lines are provided on* ~~*both*~~the *FPC* ~~*and SPCU*~~ *System*~~*s*~~ *to allow continued flow of cooling.* ~~*and makeup water to the spent-fuel pool.*~~

Connections from the RHR System to the FPC System provide a Seismic Category I, safety-related makeup capability to the spent-fuel pool. The FPC System from the RHR connections to the spent-fuel pool are Seismic Category I, safety-related. The manual valves which permit the RHR System to take suction from the spent-fuel storage pool and cool the pool are accessible following an accident in sufficient time to permit an operator to align the RHR System to prevent the spent-fuel storage pool from boiling.

Furthermore, fire hoses can be used as an alternate makeup source. The fire protection standpipes in the Reactor Building and their water supply (yard main, one diesel engine driven pump and water source) are seismically designed. A second fire pump, driven by a motor powered from the combustion turbine generator, is also provided. Engineering analysis indicates that, under the maximum abnormal *heat load with the pool gates closed and no pool cooling taking place, the pool temperature will reach about 100°C in about 16 hours. This provides sufficient time for the operator to hook up fire hoses for pool makeup.* ~~*The COL applicant will develop detailed*~~ Detailed *procedures and operator training* will be developed *for providing firewater makeup to the spent-fuel pool. See Subsection 9.1.6.9 for COL license information.*

The FPC components, housed in the Seismic Category I Reactor Building, are Seismic Category I, Quality Group C, including all components except the filter-demineralizer.

These components are protected from the effects of natural phenomena, such as: earthquake, external flooding, wind, tornado and external missiles. The FPC System is non-safety-related with the exception of the RHR System connections for safety-related makeup and supplemental cooling. The RHR System connections will be protected from the effects of pipe whip, internal flooding, internally generated missiles, and the effects of a moderate pipe rupture within the vicinity. See Subsection 9.1.6.10 for COL license information.

From the foregoing analysis, it is concluded that the FPC System meets its design bases.

9.1.3.4 Inspection and Testing Requirements

No special tests are required because, normally, one pump, one heat exchanger and one filter-demineralizer are operating while fuel is stored in the pool. The spare unit is operated periodically to handle abnormal heat loads or to replace a unit for servicing. Routine visual inspection of the system components, instrumentation and trouble alarms is adequate to verify system operability.

9.1.3.5 Radiological Considerations

The water level in the spent-fuel storage pool is maintained at a height which is sufficient to provide shielding for normal building occupancy. Radioactive particulates removed from the fuel pool are collected in filter-demineralizer units which are located in shielded cells. For these reasons, the exposure of plant personnel to radiation from the FPC System is minimal. Further details of radiological considerations for this and other systems are described in Chapters 11, 12, and 15.

9.1.4 Light Load Handling System (Related to Refueling)

9.1.4.1 Design Bases

STD DEP 9.1-1

STP DEP T1 2.5-1

The fuel-handling system is designed to provide a safe and effective means for transporting and handling fuel from the time it reaches the plant until it leaves the plant after post-irradiation cooling. Safe handling of fuel includes design considerations for maintaining occupational radiation exposures as low as reasonably achievable (ALARA).

Design criteria for major fuel-handling system equipment are provided in Tables 9.1-2 through 9.1-4, which list the safety class, quality group and seismic category. Where applicable, the appropriate ASME, ANSI, Industrial and Electrical Codes are identified. Additional design criteria are shown below and expanded further in Subsection 9.1.4.2.

The transfer of new fuel assemblies between the uncrating area and the new-fuel inspection stand~~ and/or the new fuel storage vault~~ to the fuel storage pool is accomplished using a ~~49.82~~49.82 kN auxiliary hoist on the R/B crane ~~equipped with a~~

~~general purpose grapple~~. From this point on, the fuel will ~~either~~ be handled by the telescoping grapple ~~(or auxiliary hoist)~~ on the refueling machine.

The refueling machine is Seismic Category I ~~from a structural standpoint in accordance with 10CFR50, Appendix A~~. The refueling machine is constructed in accordance with a quality assurance program that ensures the design, construction and testing requirements are met. Allowable stress due to safe shutdown earthquake (SSE) loading is 120% of yield or 70% of ultimate, whichever is least. A dynamic analysis is performed on the structures using the response spectrum method with load contributions resulting from each of three directions acting simultaneously being combined by the RMS procedure. Working loads and allowable stresses *of the machine structure are in accordance with the AISC Manual of Steel Construction. All parts of the hoist systems are designed to have a safety factor of at least ten, based on the ultimate strength of the material. A redundant load path is incorporated in the* refueling machine *fuel hoists so that no single component failure could result in a fuel bundle drop. Maximum deflection limitations are imposed on the main structures to maintain relative stiffness of the platform. Welding of the machine is in accordance with* AWS D1.1, *AWS D14.1 or ASME Boiler and Pressure Vessel Code Section IX. ~~Gears and bearing meet AGMA Gear Classification Manual and ANSI B3.5.~~ Materials used in construction of load bearing members are to ASTM specifications. For personnel safety, OSHA Part 1910.179 is applied. Electrical equipment and controls meet ANSI CI, National Electric Code, and NEMA Publication No. ICS1, MG1.*

~~The auxiliary fuel grapple and the~~ The *main telescoping fuel grapple ~~have~~* has *redundant lifting features and an indicator which confirms positive grapple engagement.*

The fuel grapple is used for lifting and transporting fuel bundles. It is designed as a telescoping grapple that can extend to the proper work level and, in its fully retracted state, still maintain adequate water shielding over the top of the active *fuel* (TAF) *of 2591 mm (8.5 ft).*

In addition to redundant electrical interlocks to preclude the possibility of raising radioactive material out of the water, the cables on the auxiliary hoists incorporate an adjustable, removal stop that will jam the hoist cable against some part of the platform structure to prevent hoisting when the free end of the cable is at a preset distance below water level.

Provision of a separate cask pit, capable of being isolated from the fuel storage pool, will eliminate the potential accident of dropping the cask and rupturing the fuel storage pool. Furthermore, limitation of the travel of the crane handling the cask will preclude transporting the cask over the spent-fuel storage pool.

9.1.4.2 System Description

Table 9.1-5 is a listing of typical tools and servicing equipment supplied with nuclear system. The following paragraphs describe the use of some of the major tools and servicing equipment and address safety aspects of the design where applicable.

Subsection 9.1.5 provides the data that verifies the ABWR Standard Plant heavy load handling systems and satisfies the guidelines of NUREG-0612.

9.1.4.2.1 Spent Fuel Cask

~~*Out of ABWR Standard Plant scope.*~~ A description of the load handling equipment, decontamination provisions and major steps necessary to bring a spent fuel cask into the R/B is provided in Subsections 9.1.4.2.2.1, 9.1.4.3 (safety evaluation), and 9.1.4.2.10.3.

Specific details of an actual DOT approved spent fuel cask will not be available until an equipment vendor is selected at a future date. The design details of any proposed shipping cask, including any unique features or design provisions associated with safe lifting and handling in the R/B with the lifting equipment described in this section, will be provided in a future FSAR amendment in accordance with 10 CFR 50.71 (e).

9.1.4.2.2 Overhead Bridge Cranes

9.1.4.2.2.1 Reactor Building Crane

STD DEP 9.1-1

STP DEP T1 2.5-1

The Reactor Building (R/B) crane is a seismically analyzed piece of equipment. The crane consists of two crane girders and a trolley which carries two hoists. The runway track, which supports the crane girders, is supported from the R/B walls at elevation 34,600 mm*. The trolley travels laterally on the crane girders carrying the main hoist and auxiliary hoist.*

The R/B crane is used to move all of the major components (reactor shield plugs, reactor pressure vessel (RPV) head insulation, reactor *vessel head, shroud head and separator, dryer assembly and pool gates) as required by plant operations. The R/B crane is used for handling new fuel from the R/B entry hatch to~~ new fuel storage, to~~ the new fuel inspection stand and the spent-fuel pool. It also is used for handling the spent fuel cask. The principal design criteria for the R/B crane are described in Subsection 9.1.5.*

9.1.4.2.3 Fuel Servicing Equipment

The fuel servicing equipment described below has been designed in accordance with the criteria listed in Table 9.1-2. Items not listed as Seismic Category I, such as hoists, tools and other equipment used for servicing, shall either be removed during operation, moved to a location where they are not a potential hazard to safety-related equipment, or seismically restrained to prevent them from becoming missiles.

9.1.4.2.3.1 Fuel Prep Machine

Two fuel preparation machines (Figure 9.1-3) are mounted on the wall of the spent-fuel pool and are used for ~~stripping reusable channels from the spent fuel and for~~

channeling and *rechanneling of ~~the~~ new* and spent *fuel* assemblies*. The machines are ~~also~~ used with ~~the~~ fuel inspection ~~fixture~~* fixtures *to provide an underwater inspection capability.* The fuel prep machines also serve as a staging location to allow movement of new or spent fuel assemblies into the spent fuel pool storage racks.

Each fuel preparation machine consists of a work platform, a frame, and a movable carriage. The frame and movable carriage are located below the normal water level in the spent fuel pool, thus providing a water shield for the fuel assemblies being handled. The fuel preparation machine carriage has a permanently installed up-travel-stop to prevent raising fuel above the safe water shield level.

9.1.4.2.3.2 New-Fuel Inspection Stand

The new-fuel inspection stand (Figure 9.1-4) serves as a support for the new-fuel bundles undergoing receiving inspection ~~and provides~~ ~~a working platform for technicians engaged in performing the inspection~~ .

The new-fuel inspection stand consists of a vertical guide column, ~~a lift unit to position the work platform at any desired level,~~ bearing seats and upper clamps to hold the fuel bundles in a vertical *position.*

The new-fuel inspection stand ~~will be firmly attached~~ is anchored into a pit on the refueling floor *so that it ~~does not~~* cannot *fall ~~into or dump personnel into the spent fuel pool~~ or tip, and* will retain the fuel assembly and maintain the structural integrity of the stand *during an SSE. (See Subsection 9.1.6.5 for COL license information requirements.)*

9.1.4.2.3.3 Channel Bolt Wrench

*The channel bolt wrench (Figure 9.1-5) is a manually operated device approximately ~~3.76~~*3.8*m in overall length. The wrench is used for removing and installing the channel fastener assembly while the fuel assembly is held in the fuel preparation machine. The channel bolt wrench has a socket which mates and captures the channel fastener capscrew.*

9.1.4.2.3.4 Channel-Handling Tool

The channel-handling tool (Figure 9.1-6) is used in conjunction with the fuel preparation machine to remove, install, and transport fuel channels in the spent fuel pool.

The tool is composed of a handling bail, a lock/release knob, extension shaft, angle guides and clamp arms which engage the fuel channel. The clamps are actuated (extended or retracted) by manually rotating the lock/release knob.

The channel-handling tool is suspended by its bail from a spring balancer on the channel-handling boom located on the spent fuel pool periphery.

9.1.4.2.3.5 ~~*Fuel Pool Vacuum Sipper*~~Not Used

~~*The fuel pool vacuum sipper (Figure 9.1-7) provides a is one means of identifying fuel suspected of having cladding failures. The fuel pool vacuum sipper consists of a fuel isolation container, fluid console, monitoring console with program controller and beta detector and the interconnecting tubing and cables. The suspected fuel assembly is placed in the isolation container. A partial vacuum is established in the gas volume above the fuel assembly. The fission product gas leakage is sensed by the beta detector and monitoring console.*~~

9.1.4.2.3.6 General-Purpose Grapple

The general-purpose grapple (Figure 9.1-8) is a handling tool used generally with the fuel. The grapple can be attached to ~~the jib crane to handle fuel during channeling, or~~ the refueling machine auxiliary hoist.

9.1.4.2.3.7 Jib Crane

The jib crane consists of a motor-driven boom monorail and a motor-driven trolley with an electric hoist. The jib crane is mounted along the edge of the storage pool to be used during refueling operations. Use of the jib crane leaves the refueling machine free to perform general fuel shuffling operations and still permit uninterrupted fuel preparation in the work area. The hoist has two full-capacity brakes and in-series adjustable up-travel limit switches. Upon hoisting, the first of two independently adjustable limit switches automatically stop the hoist cable terminal approximately 2.4m below the jib crane base. Continued hoisting is possible by depressing a momentary contact (up-travel override pushbutton on the pendant) together with a normal hoisting pushbutton. The second independently adjustable limit switch automatically interrupts hoist power at the maximum safe uptravel limit. When the jib crane is used in the handling of hazardous radioactive materials that must be kept below a specific water level, a fixed mechanical stop is installed on the hoist cable to prevent further hoisting when that travel is reached.

9.1.4.2.3.8 Refueling Machine

Refer to Subsection 9.1.4.2.7.1 for a description of the refueling machine.

9.1.4.2.3.9 Channel Handling Boom

A channel handling boom (Figure 9.1-10) with a spring-loaded balance reel is used to assist the operator in supporting a portion of the weight of the channel as it is removed from the fuel assembly. The boom is set between the fuel preparation machines. With the channel handling tool attached to the reel, the channel may be conveniently moved between the fuel preparation machines.

9.1.4.2.4 Servicing Aids

General area underwater lights are provided with a suitable reflector for illumination. Suitable light support brackets are furnished to support the lights in the reactor vessel to allow the light to be positioned over the area being serviced independent of the

platform. Local area underwater lights are small diameter lights for additional illumination. Drop lights are used for illumination where needed.

A radiation hardened portable underwater closed circuit television camera is provided. The camera may be lowered into the reactor vessel and/or spent fuel pool to assist in the inspection and/or maintenance of these areas.

A general purpose, plastic viewing aid is provided to float on the water surface to provide better visibility. The sides of the viewing aid are brightly colored to allow the operator to observe it in the event of filling with water and sinking. A portable, submersible-type, underwater vacuum cleaner is provided to assist in removing crud and miscellaneous particulate matter from the pool floors or reactor vessel. The pump and the filter unit are completely submersible for extended periods. The filter "package" is capable of being remotely changed, and the filters will fit into a standard shipping container for offsite burial. Fuel pool tool accessories are also provided to meet servicing requirements. ~~A fuel sampler is provided to detect defective fuel assemblies during open vessel periods while the fuel is in the core. The fuel sampler head isolates individual fuel assemblies by sealing the top of the fuel channel and pumping water from the bottom of the fuel assembly, through the fuel channel, to a sampling station, and returning the water to the primary coolant system. After a "soaking" period, a water sample is obtained and is radiochemically analyzed to determine possible fuel bundle leakage.~~

9.1.4.2.5 Reactor Vessel Servicing Equipment

The ~~essentiality and~~ safety classifications, the quality ~~group~~ requirements*, and the seismic category for this equipment are listed in Table 9.1-3. Following is a description of the equipment designs in reference to that table.*

9.1.4.2.5.1 Reactor Vessel Service Tools

These tools are used when the reactor is shut down and the reactor vessel head is being removed or reinstalled. Tools in this group are:

RPV Head Stud Tensioner System with RPV Head Strongback

Stud ~~Handling~~ Transfer *Tool*

~~*Stud Wrench*~~ Nut Rack and Nut and Washer Transfer Tool

~~*Nut Runner*~~

Stud Thread Protector

Thread Protector Mandrel

Bushing Wrench (if necessary)

Seal Surface Protector

Stud Elongation Measuring Rod

Dial Indicator Elongation Measuring Device

Head Guide Cap

RIP Impeller/Shaft ~~Assembly Tool~~ Handling Device (Grapple)

RIP Blanking Plug

Impeller Storage Rack

The tools are designed for a 60-year life in the specified environment. Lifting tools for lifting heavy tools *are designed for a safety factor of 10 or better with respect to the ultimate strength of the material used* or utilize a dual load path with a safety factor of 5 to 1 or better*. When carbon steel is used, it is either hard chrome plated, parkerized, or coated with an approved paint per Regulatory Guide 1.54.*

9.1.4.2.5.2 Steamline Plug

*The steamline plugs are used during reactor refueling or servicing; they are inserted in the steam outlet nozzles from inside of the reactor vessel to prevent a flow of water from the reactor into the main steamline during servicing of safety/relief valves, main steam isolation valves, or other components of the main steamlines, while the reactor water level is at the refueling level. The steamline plug design provides ~~two seals of different types.~~*three seals for waterhead. *Each one is independently capable of holding full head pressure.* Two seals are for MSIV leak test. *The equipment is constructed of corrosion-resistant materials. All calculated safety factors are 5 or better. The plug body ~~is~~*consists of stainless parts and aluminum parts. Aluminum parts are *designed in accordance with the "Aluminum Construction Manual" by the Aluminum Association.*

9.1.4.2.5.3 Shroud Head Stud Wrench

This is a hand-held tool for tightening and loosening the shroud head studs. It is designed for a 60-year life and is made of aluminum and stainless steel *for easy handling and to resist corrosion. Calculations have been performed to confirm the design.*

9.1.4.2.5.4 Head Holding Pedestal

Three pedestals are provided for mounting on the refueling floor for supporting the reactor vessel head and strongback/carousel during periods of reactor service. The pedestals have studs which engage three evenly spaced stud holes in the head flange. The flange surface rests on replaceable wear pads made of aluminum.

When resting on the pedestals, the head flange is approximately 0.9m above the floor to allow access to the seal surface for inspection and O-ring replacement.

The pedestal structure is a carbon steel weldment coated with an approved paint. It has a base with bolt holes for mounting it to the concrete floor.

A seismic analysis was made to determine the seismic forces imposed onto the pedestals and floor anchors, using the floor response spectrum method. The structure is designed to withstand these calculated forces and meet the requirements of AISC.

9.1.4.2.5.5 Head Stud Rack

The head stud rack is used for transporting and storage of eight RPV studs and is suspended from the R/B crane hook when lifting studs from the reactor well to the operating floor.

The rack is made of aluminum to resist corrosion and is designed for a safety factor of 5 with respect to the ultimate strength of the material.

The structure is designed in accordance with the "Aluminum Construction Manual" by the Aluminum Association.

9.1.4.2.5.6 Dryer and Separator Strongback

The dryer and separator strongback is a lifting device used for transporting the steam dryer or the shroud head with the steam separators between the reactor vessel and the storage pools. The strongback is a cruciform-shaped I-beam structure, which has a hook box with two hook pins in the center for engagement with the R/B crane sister hook. The strongback has a socket with a pneumatically operated pin on the end of each arm for engaging it to the four lift eyes on the steam dryer or shroud head.

The strongback has been designed such that one hook pin and one main beam of the cruciform will be capable of carrying the total load and so that no single component failure will cause the load to drop or swing uncontrollably out of an essentially level attitude. The safety factor of all lifting members is 10 or better in reference to the ultimate breaking strength of the materials.

The structure is designed in accordance with "The Manual of ~~Shell~~ Steel *Construction" by AISC. The completed assembly is proof-tested ~~at 125% of rated load,~~* per ANSI N14.6, *and all structural welds are magnetic particle inspected after load test.*

9.1.4.2.5.7 ~~*Head Strongback/Carousel*~~ RPV Head Stud Tensioner System with RPV Head Strongback

*The ~~RPV head~~*RPV Head Stud Tensioner System with RPV Head Strongback *~~strongback/carousel~~ is an integrated piece of equipment consisting of a ~~cruciform-shaped strongback, a circular monorail and a circular storage tray~~* cruciform shaped strongback, rotating table, stud tensioner, stud and nut handling tools, stud cleaning tool, a nut and washer rack, and service platform.

The strongback is a ~~box~~ beam structure which has a hook box with two hook pins in the center for engagement with the reactor service crane sister hook. Extending from the center section are arms to connect to the RPV head lifting lugs. ~~*Each arm has*~~ The

four arms have ~~a~~ lift ~~rod~~ rods *for engagement to the four lift lugs on the RPV head.* ~~*The monorail is mounted on extensions of the strongback arms and four additional arms equally spaced. between the strongback arms. The monorail circle matches the stud circle of the reactor vessel and serves to suspend stud tensioners and nut handling devices. The storage tray is suspended from the ends of the same eight arms and surrounds the RPV flange. The head strongback/carousel*~~ The rotating table suspends four stations. Each station consists of a stud tensioner, a stud and nut handling tool and a stud cleaning tool. The rotating table positions the four stations to the target studs of the reactor vessel. The RPV Head Stud Tensioner System with RPV Head Strongback serves the following functions:

(1) ***Lifting of Vessel Head—****The strongback, when suspended from the R/B crane main hook, will transport* the *RPV head plus the* ~~*carousel*~~ rotating ~~frame~~table *with all its attachments between the reactor vessel and storage on the pedestals.*

(2) ***Tensioning of Vessel Head Closure—****The* ~~*carousel,*~~ strongback with rotating ~~frame~~table, *when supported on the RPV head on the vessel, will* ~~*carry*~~suspend ~~*tensioners,*~~ *its own weight,* the four stations of stud and nut tools, *the strongback,* a *storage of nuts*~~,~~ and *washers,* ~~*thread protectors*~~*, and associated tools and equipment.*

(3) ***Storage with RPV Head—****The* ~~*carousel,*~~ strongback with rotating table, *when stored with the RPV head holding pedestals,* ~~*carries*~~suspends *the same load* ~~*for*~~as listed in *(2) above.*

(4) ***Storage without RPV Head—****During reactor operation, the* ~~*carousel*~~ RPV Head Stud Tensioner System with RPV Head Strongback *is stored on* ~~*the refueling floor*~~ four stands provided for this equipment.

The strongback, with its lifting components, is designed to meet the Crane Manufacturers Association of America, Specification No. 70. The design provides a 15% impact allowance and a safety factor of 10 in reference to the ultimate strength of the material used. After completion of welding and before painting, the lifting assembly is proof load tested and all load-affected welds and lift pins are magnetic-particle inspected.

The steel structure is designed in accordance with the Manual of Steel Construction by AISC. Aluminum structures are designed in accordance with the Aluminum Construction Manual by the Aluminum Association.

The strongback is tested in accordance with American National Standard for overhead hoists ANSI B30.16, Paragraph 16-1.2.2.2, such that one hook pin and one main beam of the structure is capable of carrying the total load, and so that no single component failure will cause the load to drop or swing uncontrollably out of an essentially level attitude. The ASME Boiler and Pressure Vessel Code, Section IX (Welder Qualification) is applied to all welder~~*r*~~*d structures.*

Regulatory Guide 1.54 *— General compliance or alternate assessment for Regulatory Guide 1.54, which provides design criteria for protective coatings, may be found in Subsection 6.1.2.*

9.1.4.2.6 In-Vessel Servicing Equipment

In-vessel removal and replacement of reactor internal pumps (RIPs) is done using the hoists on the refueling machine and RIP handling tool controller. In-vessel tools for major RIP maintenance include:

- RIP impeller/shaft handling device
- RIP blanking plug
- RIP diffuser/stretch tube handling attachment

The instrument strongback attached to the ~~RBC~~ R/B crane *auxiliary hoist is used for servicing the local power range neutron monitoring (~~PRNM~~* LPRM*), startup range neutron monitoring (SRNM), and dry tubes, should they require replacement. The strongback initially supports the dry tube into the vessel. The incore dry tube is then decoupled from the strongback and is guided into place while being supported by the instrument handling tool. Final incore insertion is accomplished from below the reactor vessel. The instrument handling tool is attached to the refueling machine auxiliary hoist and is used for removing and installing ~~PRNM~~* LPRM *fixed incore dry tubes as well as handling the SRNM dry tubes.*

9.1.4.2.7 Refueling Equipment

Fuel movement and reactor servicing operations are performed from the *~~platforms which~~* refueling machine that *~~span~~* spans *the refueling, servicing and storage cavities. The Reactor Building is supplied with a refueling machine for fuel movement and servicing, and an auxiliary platform for servicing operations from the ~~vessel flange~~* refueling floor *level.*

9.1.4.2.7.1 Refueling Machine

The refueling machine is a gantry crane, which is used to transport fuel and reactor components to and from pool storage and the reactor vessel. The machine spans the spent fuel pool on bedded tracks in the refueling floor. A telescoping mast and grapple suspended from a trolley system is used to lift and orient fuel bundles for placement in the core or storage rack. Control of the machine is from an operator station on the refueling ~~floor~~ machine, or in-part from the remote operation panel in the refueling machine remote control room.

A position indicating system and travel limit computer is provided to locate the grapple over the vessel core and prevent collisions with pool obstacles. Two auxiliary hoists of 4.71 kN and ~~9.81~~ 14.71 *kN capacity, ~~one main and one auxiliary monorail trolley-mounted,~~ are provided for incore servicing. The grapple in its retracted position provides sufficient water shielding over the active fuel during transit. The fuel grapple*

hoist has a redundant load path so that no single component failure will result in a fuel bundle drop. Interlocks on the machine:

(1) Prevent hoisting a fuel assembly over the vessel with a control rod removed

(2) Prevent collision with fuel pool walls or other structures

(3) Limit travel of the fuel grapple

(4) Interlock grapple hook engagement with hoist load and hoist up power

(5) Ensure correct sequencing of the transfer operation in the automatic or manual mode

The seismic category of the refueling machine is Seismic Class I. The refueling machine is designed to withstand the SSE without structural failure. A standard dynamic analysis using the appropriate response spectra is performed to demonstrate compliance to design requirements. The fuel hoist is designed to meet the requirements of NUREG-0554, Single Failure Proof Cranes.

9.1.4.2.7.2 Auxiliary Platform

The auxiliary platform provides a reactor flange level working surface for in-vessel inspection and reactor internals servicing, and permits servicing access for the full vessel diameter. Typical operations to be performed are inservice inspections. No hoisting equipment is provided with this platform, as this function can be performed from the refueling machine. The platform operates on tracks at the reactor vessel flange level and is lowered into position by the reactor building crane using the dryer/separator strongback. The platform weighs approximately 17.79 kN and features 1.5m wide work areas and motorized travel. The platform power is supplied by a cable from the refueling floor elevation.

9.1.4.2.7.3 Fuel Assembly Sampler

The fuel assembly sampler ~~(Figure 9.1-9)~~ provides a means of obtaining a water sample for radiochemical analysis from fuel bundles while installed in the core. The fuel assembly sampler consists of a sampling ~~station~~ head*, ~~two~~* a *sampling chamber and interconnecting tubing. The sampling* head consists of two sipping tubes. ~~*chambers are lowered over four adjacent assemblies and samples are obtained of the water in the fuel channels.*~~ The refueling machine grapple with the sampling head is lowered over the fuel in the core to obtain the water samples.

9.1.4.2.8 ~~Storage Equipment~~ Fuel Pool Equipment Storage Racks

Specially designed equipment storage racks are provided. Additional storage equipment is listed on Table 9.1-5. For fuel storage racks description and fuel arrangement, see Subsections 9.1.1 and 9.1.2.

Defective fuel assemblies are placed in special fuel storage containers, which are stored in the equipment storage rack, both of which are designed for the defective fuel.

These may be used to isolate leaking or defective fuel while in the fuel pool and during shipping. ~~Channels can also be removed from the fuel bundle while in a defective fuel storage container~~.

~~The fuel pool sipper may be used for out-of-core wet sipping at any time. They are used to detect a defective fuel bundle while circulating water through the fuel bundle in a closed system. The bail on the container head is designed not to fit into the fuel grapple.~~

Two control blade storage racks are provided for the storage of control blades. Equipment storage racks are provided for the long term storage of the RIP impeller and diffuser and a temporary storage rack is provided to assist in the removal of either the RIP impeller or diffuser from the reactor building pool. The equipment storage racks can hold the defective fuel container, control blades, fuel support castings, and the vacuum sipper fuel isolation canister.

9.1.4.2.9 Under-Reactor Vessel Servicing Equipment

The primary functions of the under-reactor vessel servicing equipment are to:

(1) Remove and install the major components of the fine motion *control rod drives* (FMCRD)

(2) Install and remove the neutron detectors

(3) Remove and install RIP motors

Table 9.1-4 lists the major *equipment ~~and tools~~ required for servicing. Of the equipment listed, the ~~equipment handling~~* undervessel rotating *platform and the FMCRD handling equipment are powered* electrically and *pneumatically.*

The FMCRD handling equipment is designed for the removal and installation of the fine motion *control rod drives* major components *from their housings. This equipment is used in conjunction with the ~~equipment handling~~* Undervessel Rotating *platform. It is designed in accordance with OSHA-1910.179, and American Institute of Steel Construction, AISC.*

The undervessel RIP installation and removal equipment includes a RIP motor elevator, RIP coupling tools, seal pressurization tools, and various measurement, tensioning, and torquing tools needed to decouple the RIP internal components from the RIP motor and seal the RIP casing against leakage of RPV water.

The undervessel rotating *platform provides a working surface for equipment and personnel performing work in the undervessel area. It is a polar platform capable of ~~rotating~~* covering a *360°* range*. This equipment is designed in accordance with the applicable requirements of OSHA (Vol 37, No. 202, Part 1910N), AISC, ANSI-C-1, National Electric Code.*

~~The spring reel is used to pull the incore guide tube (ICGT) seal or incore detector into the ICGT during incore servicing~~. The undervessel servicing equipment is used in

conjunction with a rail system and various carts to transport RIP and FMCRD components and tools from outside the containment to the undervessel area.

The water seal cap is designed to prevent leakage of primary coolant from incore detector housings during detector replacement. It is designed to industrial codes and manufactured from corrosion-resistant material.

~~*The incore flange seal test plug is used to determine the pressure integrity of the incore flange O-ring seal. It is constructed of corrosion-resistant material.*~~

9.1.4.2.10 Fuel-Handling Tasks

The Fuel-Handling and Transfer System provides a safe and effective means of transporting and handling fuel from the time it reaches the plant until it leaves the plant after post-irradiation cooling. The following subsections describe the integrated fuel transfer system which ensures that the design bases of the fuel handling system and the requirements of Regulatory Guide 1.13 are satisfied.

9.1.4.2.10.1 Arrival of Fuel on Site

The new fuel is delivered to the plant on flatbed truck or railcar. The new fuel is delivered to the receiving stations in the Reactor Building (R/B) through the rail and truck entry door. There, the incoming new fuel is unloaded, ~~removed from their shipping crates~~ and moved up to the refueling floor for inspection and channeling.

9.1.4.2.10.2 Refueling Procedure

A general plant refueling and servicing sequence diagram is shown in Figure 9.1-12. Fuel handling procedures are shown in Figures 9.1-13 and 9.1-14 and described below. Typical R/B layouts are shown in Section 1.2 and component drawings of the principal fuel-handling equipment are shown in Figures 9.1-3 through ~~9.1-11~~ 9.1-8 and 9.1-10*.*

When the reactor is sufficiently cooled, the drywell head and *head insulation ~~and vessel head~~ are removed by the R/B crane and placed in their respective storage areas. The R/B crane and ~~cruciform-shaped strongback~~* the RPV Head Stud Tensioner System with RPV Head Strongback *will be used to handle the RPV head and attachments. The strongback is designed so that no single component failure will cause the load to drop or swing uncontrollably out of an essentially horizontal attitude.* The RPV Head Stud Tensioner System with RPV Head Strongback is detached from the reactor building crane during stud de-tensioning or tensioning operations. Following stud de-tensioning operations, the reactor building crane is used to lift the RPV head using the previously mounted strongback with the tensioning system, and nut rack with nuts and washers.

The strongback attaches to the crane sister hook by means of an integral hook box and two hook pins. Each pin is capable of carrying the rated load. Each main beam of the ~~cruciform~~ strongback *is capable of carrying the rated load.*

On both ends of each leg are adjustable lifting rods, suspended vertically to attach the lifting legs to the RPV head. These rods are for adjustment for even four-point load distribution and allow for some flexibility in diametrical location of the lifting lugs on the head.

The maximum potential drop height is at the point where the head is lifted vertically from the vessel and before moving it horizontally to the head storage pedestals.

The shroud head load and the steam dryer load will both be lifted with the dryer/separator strongback.

This strongback is a cruciform shape with box-shaped adapters at the four ends. Each socket box has two compartments to accommodate the two different lug spacings on the dryer and on the shroud head. Pneumatically operated lifting pins will penetrate the sockets to engage the lifting lugs.

Each of the above strongbacks is load tested ~~*at 125% rated load*~~ per ANSI 14.6. ~~*At*~~ During *this test, measurements are taken before test load, under test load and after releasing load, to verify that deflections are within acceptable limits. A magnetic particle test of structural welds is performed after the load test to assure structural integrity.*

An outer seal (RPV Refueling Bellows) *exists around the vessel flange to seal the drywell from the reactor well.* The drywell to RPV refueling bellows acts as a mechanical barrier between the bulkhead of the drywell through a flanged connection to the reactor pressure vessel to retain water in the reactor well when the latter is flooded during the refueling operation. It acts as a water seal between the drywell head space and lower drywell chamber during refueling when the upper space is flooded with water. In addition the RPV refueling bellows is flexible enough to allow a differential movement of the vessel with respect to the drywell caused by thermal expansion of the structures and the vessel during normal plant operations.

Water is pumped into the reactor well. Once the reactor well is filled, the dryer and separator are removed and transferred to their storage areas within the dryer/separator (D/S) pit using the D/S strongback. The tools that *are used in these and subsequent reactor servicing operations are listed in Table 9.1-2. Once access to the core is possible, the refueling machine can relocate and move fuel assemblies to and from the pool storage racks.*

~~*Simultaneously, the*~~ The *RIP* motor, *FMCRD hydraulic* and electrical *system, and the Neutron Monitoring System may be serviced from beneath the vessel.*

During refueling, the refueling machine shuffles fuel in the reactor, *transfers the spent fuel from the core to the spent fuel pool* and transfers new fuel to the reactor. ~~*The spent fuel assembly is placed in the fuel preparation machine, where its channel is removed and fitted to the new fuel bundle previously placed in the machine. During channeling, the spent fuel bundle is placed in the storage racks by the refueling platform. The refueling platform then places another new fuel bundle in the fuel preparation machine for channeling.*~~

When refueling and servicing are completed, the reactor will be restored. The following steps are typical restoration procedure; *the steam separator assembly is replaced in the vessel~~, the steamline plugs removed~~ and the steam dryer returned to the vessel. At this point, the gates are installed, isolating the reactor well from the other pools. The reactor well is then drained to the main condenser. With the reactor well empty, the vessel and drywell heads are replaced.*

9.1.4.2.10.2.1 New Fuel Preparation

9.1.4.2.10.2.1.1 Receipt and Inspection of New Fuel

STD DEP 9.1-1

STP DEP T1 2.5-1

Generally, channeled fuel is shipped from the fuel vendor to the site in a stainless steel inner container (two fuel assemblies per container). This inner container is placed into a stainless steel outer container, secured in place, accelerometers may be installed to monitor shipping loads, and the containers are loaded onto a truck for delivery to the site. *The incoming new fuel ~~will be~~* is removed from the truck and delivered ~~*to a receiving station within the Reactor Building (R/B). The crates are unloaded from the transport vehicle and*~~ directly to the refueling floor near the new fuel storage vault where the new fuel is *examined for damage during shipment.*

On the refueling floor, using the auxiliary hoist on the R/B Crane, the outer container lid is removed, accelerometers (if used) are checked, and the inner container lid is removed. The new fuel is removed from the inner container and moved to one of the following locations:

- Fuel prep machine for storage in the spent fuel pool
- New fuel inspection stand for further inspection

~~The new fuel arrives in its wooden crate at the plant where it is moved to a secure area and the inner metal shipping container is removed from the outer wooden box. *The* wooden *crate dimensions are approximately 813 x 813 x 5486 mm. Each crate contains* one metal RA container that contains *two fuel bundles* assemblies *supported by an inner metal container. Shipping* The shipping *weight of each unit is approximately 13.35 kN.* It is then moved to the Reactor building via the rail and truck entry door. The inner RA container is then lifted to the refueling floor by the R/B crane. *The receiving station shall include a separate area where the crate cover and the inner metal container can be removed from the crate. Both inner and outer shipping containers are reusable. Handling during uncrating is accomplished by use of the R/B cranes. The inner container is tilted to a position which is almost vertical, while the fuel bundles are unstrapped and removed from the container with the R/B crane. They are then transported to storage in the new fuel storage racks located in the new fuel storage vault or to the new fuel inspection stand located on the refueling floor.~~

~~*The actual inspection of the new fuel is normally deferred until all the reusable containers are emptied and the area around the new fuel vault cleared. At that time, the individual fuel bundles are removed from the vault, inserted in the new fuel inspection stand, dimensionally and visually inspected, and returned to the storage vault to await assembly with channels. The new fuel inspection stand accommodates two fuel assemblies at one time.*~~

9.1.4.2.10.2.1.2 Channeling New Fuel

The new fuel can be channeled using new channels in the new fuel inspection stand. ~~*New fuel is unloaded from the new fuel vault and transported to the fuel racks in the spent fuel pool. Usually, channeling new fuel is done concurrently with dechanneling spent fuel. Two fuel preparation machines are located in the spent fuel pool, one used for dechanneling spent fuel and the other to channel new fuel. The*~~ If previously irradiated channels are to be used, the *procedure is as follows:*

Using the refueling platform, a spent fuel bundle is transported to the fuel prep machine. The channel is unbolted from the bundle using the channel bolt wrench. The channel handling tool is fastened to the top of the channel and the fuel prep machine carriage is lowered removing the fuel from the channel. The channel is then positioned over a new-fuel bundle located in fuel prep machine No. 2 and the process reversed. The channeled new fuel is stored in the pool storage racks ready for insertion into the reactor.

9.1.4.2.10.2.1.3 Equipment Preparation

Another ingredient in a successful refueling outage is equipment and new fuel readiness. Equipment long lying dormant must be brought to life. All tools, grapples, slings, strongbacks, stud tensioners, etc., will be given a thorough inspection and operational check, and any defective (or well worn) parts will be replaced. Air hoses on grapples will be checked. Crane cables will be routinely inspected. All necessary maintenance will be performed to preclude outage extension due to equipment failure.

9.1.4.2.10.2.2 Reactor Shutdown

The reactor is shut down according to a prescribed planned procedure. During cooldown, the reactor pressure vessel is vented and filled to above flange level to promote cooling.

9.1.4.2.10.2.2.1 Drywell Head Removal

Immediately after cooldown, the work to remove the drywell head can begin. The drywell head will be attached by a quick disconnect mechanism. To remove the head, the quick disconnect pins are withdrawn and stored separately for reinsertion when the head is replaced. The drywell head is lifted by the R/B crane to its storage space on the refueling floor. The drywell seal surface protector is installed before any other activity proceeds in the reactor well area.

9.1.4.2.10.2.2.2 Reactor Well Servicing

When the drywell head has been removed, several pipe lines are exposed. These lines penetrate the reactor well through openings. The piping must be removed and the openings sealed. There are also various vent openings which must be made watertight.

Water level in the vessel is now lowered to flange level in preparation for head removal.

9.1.4.2.10.2.3 Reactor Vessel Opening

9.1.4.2.10.2.3.1 Vessel Head Removal

~~The combination head strongback and~~ RPV Head Stud Tensioner System with RPV Head Strongback *~~carousel stud tensioner~~ is transported by the R/B crane and positioned on the reactor vessel head.* The four lug pins are engaged into the RPV head lugs and the programmable control station is connected.

Each stud is tensioned and its nut loosened in a series of two to three passes. Finally, when the nuts are loose, they are backed off ~~using a nut runner until only a few threads engage~~ and removed along with the washer using the four nut and washer transfer tools*. ~~The suspended nut is hand rotated free from the stud, and the nuts and washers are placed in the racks provided for them on the carousel.~~* The nuts and washers are placed in their respective holders on the nut rack. *When all the nuts and washers are removed, the vessel stud protectors and vessel head guide caps are installed.*

Next, the head~~, strongback~~ and RPV Head Stud Tensioner System with RPV Head Strongback *~~and carousel~~ are transported by the R/B crane to the head holding pedestals on the refueling floor. The head holding pedestals keep the vessel head elevated to facilitate inspection and O-ring replacement.*

~~The studs in line with the fuel transfer gates are removed from the vessel and placed in the rack provided for them. The loaded rack is transported to the refueling floor for storage. Removal of these studs provides a path for fuel movement.~~

9.1.4.2.10.2.3.2 Dryer Removal

The dryer-separator strongback is lowered by the R/B crane and attached to the dryer lifting lugs. The dryer is lifted from the reactor vessel and transported underwater to its storage location in the D/S pit adjacent to the reactor well.

9.1.4.2.10.2.3.3 Separator Removal

In preparation for the separator removal, the steamline plugs are installed in the four main steam nozzles. The separator is then unbolted from the shroud using shroud head bolt wrenches. When the unbolting is accomplished, the dryer separator strongback is lowered into the vessel and attached to the separator lifting lugs. The separator is lifted from the reactor vessel and transported underwater to the storage location in the D/S pit adjacent to the reactor well.

9.1.4.2.10.2.3.4 Fuel Assembly Sampling

During reactor operation, the core offgas radiation level is monitored. If a rise in offgas activity has been noted, the reactor core may be sampled during shutdown to locate any leaking fuel assemblies. The sipping tube is attached on the refueling machine grapple, water inside the fuel channel is sipped and the fission product gas leakage is sensed by the detector. ~~*The fuel sample isolates up to a four bundle array in the core. This stops water circulation through the bundles and allows fission products to concentrate if a bundle is defective. After 10 minutes, a water sample is taken for fission product analysis.*~~ *If a defective bundle is found, it is transferred to the spent fuel pool and stored in a special defective fuel storage container to minimize background activity in the spent fuel pool.*

9.1.4.2.10.2.4 Refueling and Reactor Servicing

The gate isolating the spent fuel pool from the reactor well is removed, thereby interconnecting the pool areas. The refueling of the reactor can now begin.

9.1.4.2.10.2.4.1 Refueling

During a normal outage, approximately 25% of the fuel is removed from the reactor vessel. Most ~~*25%*~~ *of the* remaining *fuel is shuffled in the core (generally from peripheral to center locations) and 25% new fuel is installed. The actual fuel handling is done with the refueling* ~~*platform*~~ machine*. It is used as the principal means of transporting fuel assemblies between the reactor well and the spent fuel pool; it also serves as a hoist and transport device. The machine travels on a track extending along each side of the reactor well and spent fuel pool and supports the trolley, refueling grapple, and auxiliary hoists. The grapple is suspended from a trolley that can traverse the width of the platform.*

The refueling machine has two auxiliary hoists of 4.71 kN and ~~*9.81*~~ 14.71 *kN capacity.* ~~*One*~~ The larger capacity *hoist normally* ~~*can be*~~ is *used with appropriate grapples to handle control rods,* ~~*guide tubes*~~*,* with *fuel support pieces,* ~~*sources and other internals of the core*~~ and RIP components*. The* smaller *auxiliary hoist* ~~*can also*~~ ~~*serve*~~ serves *as a means of handling other equipment within the pool.* ~~*A second auxiliary hoist is mounted on the platform trolley.*~~

The machine control system permits variable-speed, simultaneous operation of all three platform motions. Maximum speeds are:

(1)	*Bridge*	*20 m/min*
(2)	*Trolley*	*10 m/min*
(3)	*Grapple hoist*	~~*12*~~ 15.2 *m/min*

In the remote *refueling machine control room, a single operator can control all the motions* ~~*of*~~ to locate *the platform* ~~*required to handle the fuel assemblies during refueling*~~*. Interlocks on both the grapple hoist and auxiliary hoist prevent hoisting of a fuel assembly over the core with a control rod withdrawn; interlocks also prevent*

withdrawal of a blade with a fuel assembly over the core attached to either the fuel grapple or auxiliary hoists. Interlocks block travel over the reactor in the startup mode.

The refueling machine contains a system that indicates the position of the fuel grapple over the core. The readout, in the local control room, matches the core arrangement cell identification numbers. The position indicator is accurate within 5 mm, relative to actual position, and minimizes jogging required to correctly place the grapple over the core.

To move fuel, the fuel grapple is aligned over the fuel assembly, lowered and attached to the fuel bundle bail. The fuel bundle is raised out of the core, moved through the refueling slot to the spent fuel pool, positioned over the storage rack and lowered into the rack. Fuel is shuffled and new fuel is moved from the spent fuel pool to the reactor vessel in the same manner.

9.1.4.2.10.2.5 Vessel Closure

The following typical procedural steps, when performed, will return the reactor to operating condition. The procedures are the reverse of those described in the preceding sections. Many steps are performed in parallel and not as listed.

(1) ***Core Verification—****the core position of each fuel assembly must be verified to assure that the desired core configuration has been attained. Underwater TV with a video tape is utilized. Cable optional.*

(2) ***FMCRD Tests—****the control rod drive timing, friction and scram tests are performed as required.*

(3) Replace separator.

(4) Bolt separator~~ and remove four steamline plugs~~.

(5) Replace steam dryer.

(6) Install gates.

(7) Drain reactor well.

(8) Remove drywell seal surface covering; open drywell vents.

(9) ~~Replace vessel studs.~~Install reactor vessel head

(10) Install vessel head piping and insulation.

(11) Hydro test vessel if required.

(12) Install drywell head; leak check.

(13) Install shield plugs.

(14) Stow gates.

*(15) **Startup Tests—**the reactor is returned to full power operation. Power is increased gradually in a series of steps until the reactor is operating at rated power. At specific steps during the approach to power, the incore flux monitors are calibrated.*

9.1.4.2.10.3 Departure of Fuel From Site

The empty cask arrives at the plant on a special flatbed railcar or truck. The personnel shipping barrier and transfer impact structure are removed from the large casks and stored outside the rail entry door. Health physics personnel check the cask exterior to determine if decontamination is necessary. Decontamination, if required, and washdown to remove road dirt, is performed before removal of the cask from the transport vehicle. The R/B equipment entry airlock door is opened and the cask with its transport device moved into the building. The rail car or truck is blocked in position.

The airlock door is closed and the cask is inspected for shipping damage.

The cask cooling system of the transport vehicle is disconnected. The cask yoke is removed from its storage position on the flatbed and attached to the cask trunnions. The yoke engagement, car brakes and wheel blocks and clearances for cask tilt and lift are checked. The cask is tilted to the vertical position with combined main hoist lift and trolley movement. With the cask in a vertical position, the cask is lifted approximately 1.5m off the transport device skid mounting trunnions to clear the upper coolant duct. The cask is moved up to the refueling floor and then into the cask washdown ~~pit~~ area and slowly lowered to the floor ~~of the pit~~. Closure head lifting cables on the yoke are attached to the head and secured and the closure nuts are disengaged. The cask is next raised and transferred into the cask pit.

The cask is moved to a position over the center of the cask pit and slowly lowered into the cask pit until it rests on the cask pit floor.

The cask lifting yoke is lowered until disengaged from the cask trunnions and the closure head lifted off the cask. The closure head and yoke are moved into the cask washdown ~~pit~~ area for storage. The cask pit is filled with water, and the ~~The~~ canal gates between the cask pit and the spent fuel pool are removed and spent fuel transfer from the storage racks to the cask is started.

Spent fuel is transferred underwater from storage in the spent fuel pool to the cask using the telescoping fuel grapple mounted on the refueling ~~platform~~ machine. When the cask is filled with spent fuel, the gate between the cask pit and the spent fuel pool is replaced. The closure head is replaced on the cask and the lift yoke engaged with the cask trunnions. The loaded cask is raised, transferred to the cask washdown ~~pit~~ area, and slowly lowered to the ~~pit~~ floor.

The cask is checked by health physics personnel and decontamination is performed in the cask washdown ~~pit~~ area with high pressure water sprays, chemicals and hand scrubbing as required to clean the cask to the level required for transport. Cooling

connections are available in the cask washdown ~~pit~~ area in the event cooling is required during decontamination activities. The remaining closure nuts are replaced and tightened. Smear tests are performed to verify cleaning to ~~offsite transportation~~ applicable requirements.

The cleaned cask is lowered from the refueling floor to the R/B entry lock onto cask skids with the R/B crane and mounted on the transport vehicle. The cask cooling system of the transport vehicle is connected to the cask and the cask internal pressure and temperature are monitored. When they are at equilibrium conditions, the cask is ready for shipment. The personnel barrier and impact structure are replaced. The R/B airlock facility doors are opened and the cask and transport device are moved out of the R/B.

9.1.4.3 Safety Evaluation of Fuel-Handling System

Safety aspects (evaluation) of the fuel servicing equipment are discussed in Subsection 9.1.4.2.3, and safety aspects of the refueling equipment are discussed throughout Subsection 9.1.4.2.7. In addition, a summary safety evaluation of the fuel-handling system is provided below.

The fuel prep machine assists in the ~~removes~~ removal and ~~installs~~ installation of channels with all parts remaining underwater. Mechanical stops prevent the carriage from lifting the fuel bundle or assembly to height where water shielding is not sufficient. Irradiated channels, as well as small parts such as bolts and springs, are stored underwater. The spaces in the channel storage rack have center posts which prevent the loading of fuel bundles into this rack.

There are no nuclear safety problems associated with the handling of new-fuel bundles, singly or in pairs. Equipment and procedures prevent an accumulation of more than two bundles in any location.

The refueling machine is designed to prevent it from toppling into the pools during a SSE. Redundant safety interlocks, as well as limit switches, are provided to prevent accidentally running the grapple into the pool walls. The grapple utilized for fuel movement is on the end of a telescoping mast. At full retraction of the mast, the grapple is sufficiently below water surface, so there is no chance of raising a fuel assembly to the point where it is inadequately shielded by water. The grapple is hoisted by redundant cables inside the mast, and is lowered by gravity. A digital readout is displayed to the operator, showing him the exact coordinates of the grapple over the core.

~~The mast is suspended and gimbaled from the trolley, near its top, so that the mast can be swung about the axis of platform travel, in order to remove the grapple from the water for servicing and for storage.~~

The grapple has two independent hooks~~, each operated by an air cylinder~~. Engagement is indicated to the operator. Interlocks prevent grapple disengagement until a “slack cable” signal from the lifting cables indicates that the fuel assembly is

seated. The slack cable indication is also used to determine if a fuel bundle is lodged in a position other than its normal, seated position in the core.

In addition to the slack cable signal, the elevation of the grapple is continuously indicated. Also, after the grapple is disengaged, the position of the upper part of the fuel bundle can be observed using television.

In addition to the main hoist on the trolley, there are two auxiliary hoists on the trolley. These three hoists are precluded from operating simultaneously because control power is available to only one of them at a time.

The two auxiliary hoists have electrical interlocks which prevent the lifting of their loads higher than a specified limit. Adjustable mechanical jam-stops on the cables back up these interlocks.

The cask is moved by the R/B crane to the cask pit and gated off and the cask pit is *filled with water. Only then is the spent fuel pool connected to the cask pit and the fuel transfer begun. When the cask is loaded, the spent fuel pool is gated closed and the cask removal procedure reversed. A cask decontamination ~~pit~~* area *is provided.*

Light loads such as the ~~blade guide, fuel support casting, control rod~~ ~~or~~ control rod guide tube weigh considerably less than a fuel bundle and are administratively controlled to eliminate the movement of any light load over the spent fuel pool above the elevation required for fuel assembly handling. Thus, the kinetic energy of any light load would be less than a fuel bundle and would have less damage induced. Secondly, to satisfy NUREG-0554, the equipment handling heavy load *components over the spent fuel pool are designed to meet the single-failure-proof criteria.* The equipment layout in the fuel transfer pool and spent fuel pool is such that no heavy loads (e.g., the RIP diffuser with grapple) are transported over the spent fuel pool.

The spent fuel storage racks are purchased equipment. The purchase specification for these racks will require the vendor to provide the information requested in Question 430.192 pertaining to load drop analysis (see Subsection 9.1.6.4 for COL license information).

In summary, the fuel-handling system complies with General Design Criteria 2, 3, 4, 5, 61, and 63, and applicable portions of 10 CFR 50.

The safety evaluation of the new and spent fuel storage is presented in Subsections 9.1.1.3 and 9.1.2.3.

9.1.4.4 Inspection and Testing Requirements

9.1.4.4.1 Inspection

Refueling and servicing equipment is subject to the strict controls of quality assurance, incorporating the requirements of federal regulation 10 CFR 50 Appendix B. The fuel storage racks and refueling machine have an additional set of engineering specified

"quality requirements" that identify features which require specific QA verification of compliance to drawing requirements.

For components classified as American Society of Mechanical Engineers (ASME) Section III, the shop operation must secure and maintain an ASME "N" stamp, which requires the submittal of an acceptable ASME quality plan and a corresponding procedural manual.

Additionally, the shop operation must submit to frequent ASME audits and component inspections by resident state code inspectors. Prior to shipment, every component inspection item is reviewed by QA supervisory personnel and combined into a summary product quality checklist (PQL). By issuance of the PQL, verification is made that all quality requirements have been confirmed and are on record in the product's historical file.

9.1.4.4.2 Testing

Qualification testing is performed on refueling and servicing equipment prior to multi-unit production. Test specifications are defined by the responsible design engineer and may include a sequence of operations, load capacity and life cycles tests. These test activities are performed by an independent test engineering group and, in many cases, a full design review of the product is conducted before and after the qualification testing cycle. Any design changes affecting function, that are made after the completion of qualification testing, are requalified by test or calculation.

Functional tests are performed in the shop prior to the shipment of production units and generally include electrical tests, leak tests, and sequence of operations tests.

When the unit is received at the site, it is inspected to ensure no damage has occurred during transit or storage. Prior to use and at periodic intervals, each piece of equipment is again tested to ensure the electrical and/or mechanical functions are operational.

Passive units, such as the fuel storage racks, are visually inspected prior to use.

Fuel-handling and vessel servicing equipment preoperational tests are described in Subsection 14.2.12.

Specific details of the Light Load Fuel Handling equipment are vendor specific. The following Light Load Fuel Handling System information will be developed and implemented after equipment procurement and prior to use:

(1) Light load fuel handling equipment operation and maintenance procedures.

(2) Fuel Handling procedures.

(3) Light load fuel handling equipment inspection and test plans, NDE, visual, etc.

(4) QA program to monitor and assure implementation and compliance of fuel handling operations and controls.

(5) Operator qualifications, training and control program.

These procedures and programs will be available for review prior to Receipt of Fuel.

9.1.4.5 Instrumentation Requirements

9.1.4.5.1 Refueling Machine

The refueling machine has a X-Y-Z position indicator system that informs the operator which core fuel cell the fuel grapple is accessing. Interlocks and a control room monitor are provided to prevent the fuel grapple from operating in a fuel cell where the control rod is not in the proper orientation for refueling.

Additionally, there is a series of mechanically activated switches and relays that provides monitor indications on the operator's console for grapple limits, hoist and cable load conditions, and confirmation that the grapple's hook is either engaged or released.

A series of load cells is installed to provide automatic shutdown whenever threshold limits are exceeded for either the fuel grapple or the auxiliary hoist units.

9.1.4.5.2 ~~Dual Control Blade~~Control Rod and Fuel Support Grapple

Although the control ~~blade~~rod and *fuel support grapple* is *not essential to safety, it has an instrumentation system consisting of mechanical switches and indicator lights. This system provides the operator with a positive indication that the grapple is properly aligned and oriented and that the grappling mechanism is either extended or retracted.*

9.1.4.5.3 Other

Refer to Table 9.1-5 for additional refueling and servicing equipment not requiring instrumentation.

9.1.4.5.4 Radiation Monitoring

The fuel area ventilation exhaust radiation monitoring is discussed in Subsection 11.5.2.1.3.

9.1.5 Overhead Heavy Load Handling Systems (OHLH)

9.1.5.1 Design Bases

The equipment covered by this subsection concerns items considered as heavy loads that are handled under conditions that mandate critical handling compliance.

Critical load handling conditions include loads, equipment, and operations which, if inadvertent operations or equipment malfunctions either separately or in combination, could cause:

(1) A release of radioactivity.

(2) A criticality accident.

(3) The inability to cool fuel within reactor vessel or spent fuel pool.

(4) Prevent safe shutdown of the reactor. This includes risk assessments to spent fuel and storage pool water levels, cooling of fuel pool water, new fuel criticality. This includes all components and equipment used in moving any load weighing more than one fuel assembly, including the weight of its associated handling devices (i.e. 4.45 kN).

The R/B crane as designed shall provide a safe and effective means for transporting heavy loads, including the handling of new and spent fuel, plant equipment and service tools. Safe handling includes design considerations for maintaining occupational radiation exposure as low as practicable during transportation and handling.

Where applicable, the appropriate seismic category, safety class quality ~~group~~ requirements*, ASME, ANSI, industrial and electrical codes have been identified (Tables 3.2-1 and 9.1-6). The designs will conform to the relevant requirements of General Design Criteria 2, 4 and 61 of 10 CFR 50 Appendix A.*

The lifting capacity of each crane or hoist is designed to at least the maximum actual or anticipated weight of equipment and handling devices in a given area serviced. The hoists, cranes, or other special *lifting devices* for handling heavy loads *shall comply with the requirements of ANSI N14.6, ANSI B30.9, ANSI B30.10 and NUREG-0612, Subsection 5.1.1(4) or 5.1.1(5). Cranes and hoists are also designed to criteria and guidelines of NUREG-0612, Subsection 5.1.1(7), ANSI B30.2 and CMAA-70 specifications for electrical overhead traveling cranes, including ANSI B30.11, ANSI B30.16, ~~and~~ NUREG-0554*, and ASME NOG-1 *as applicable.*

9.1.5.2 System Description

9.1.5.2.1 Reactor Building Crane

*The Reactor Building (R/B) is a reinforced concrete structure which encloses the reinforced concrete containment vessel, the refueling floor, new-fuel storage vault, the storage pools for spent-fuel and the dryer and separator and other equipment. The R/B crane provides heavy load lifting capability for the refueling floor. The main hook 1.471 MN will be used to lift the concrete shield blocks, drywell head, reactor pressure vessel (RPV) head insulation, RPV head, dryer, separator strongback, ~~RPV head strongback carousel~~*RPV Head Stud Tensioner System with RPV Head Strongback*, new-fuel shipping containers, and spent-fuel shipping cask. The orderly placement and movement paths of these components by the R/B crane precludes transport of these heavy loads over the spent fuel storage pool or over the new-fuel storage vault.*

The R/B crane will be used during refueling/servicing as well as when the plant is online. During refueling/servicing, the crane handles the shield plugs, drywell and reactor vessel heads, steam dryer and separators, etc. (Table 9.1-7). Minimum crane coverage includes R/B refueling floor laydown areas, and R/B equipment storage pit. During normal plant operation, the crane will be used to handle new-fuel shipping containers and the spent-fuel shipping casks. Minimum crane coverage must include the new-fuel vault, the R/B equipment hatches, and the spent-fuel cask loading pit *and*

washdown ~~pits~~ area. A description of the refueling procedure can be found in Section 9.1.4.

The R/B crane will be interlocked to prevent movement of heavy loads over the spent-fuel storage portion of the spent-fuel storage pool. Since the crane is used for handling large heavy objects over the open reactor, the crane is of Type I design in accordance with ASME NOG-1. The R/B crane shall be designed to meet the single-failure-proof requirements of NUREG-0554 and ASME NOG-1.

9.1.5.2.2 Other Overhead Load Handling System

9.1.5.2.2.1 Upper Drywell Servicing Equipment

The upper drywell arrangement provides servicing access for the main steam isolation valves (MSIVs), feedwater isolation valves, safety/relief valves (SRVs), emergency core cooling systems (ECCS) isolation valves, and drywell cooling coils, fans and motors. Access to the space is via the R/B through either the upper drywell personnel lock or equipment hatch. All equipment is removed through the upper drywell equipment hatch. Platforms are provided for servicing the feedwater and MSIVs, SRVs, and drywell cooling equipment with the object of reducing maintenance time and operator exposure. The MSIVs, SRVs, and feedwater isolation valves all weigh in excess of 4.45 kN. Thus, they are considered heavy loads.

With maintenance activity only being performed during a refueling outage, only safe shutdown ECCS piping and valves need be protected from any inadvertent load drops. Since only one division of ECCS is required to maintain the safe shutdown condition and the ECCS divisions are spatially separated, an inadvertent load drop that breaks more than one division of ECCS is not credible. In addition, two levels of piping support structures and equipment platforms separate and shield the ECCS piping from heavy loads transport path.

This protection is adequate such that no credible load drop can cause either:

(1) A release of radioactivity.

(2) A criticality accident.

(3) The inability to cool fuel within reactor vessel or spent fuel pool.

9.1.5.2.2.2 Lower Drywell Servicing Equipment

The lower drywell (L/D) arrangement provides for servicing, handling and transportation operations for the RIP and FMCRD components. The lower drywell OHLHS consists of ~~a~~ an ~~rotating equipment service~~ undervessel rotating platform, chain hoists, FMCRD ~~removal machine~~ handling device, ~~a~~ RIP motor removal ~~machine~~ equipment, and other special purpose tools.

The undervessel rotating ~~equipment~~ platform provides a work surface under the reactor vessel to support the weight of personnel, tools, and equipment and to facilitate transportation moves and heavy load handling operations. The platform rotates ~~360~~

180° in either direction from its stored or "idle" position. The platform is designed to accommodate the maximum weight of the accumulation of tools and equipment plus a maximum sized crew. Weights of tools and equipment are specified in the interface control drawings for the equipment used in the lower drywell. Special hoists are provided in the lower drywell and reactor building to facilitate handling of these loads.

(1) Reactor Internal Pump Servicing

There are 10 RIPs and their supporting instrumentation and heat exchangers in the L/D that require servicing. The facilities provided for servicing the RIPs include:

(a) ~~L/D equipment~~ Undervessel rotating *platform* has a RIP motor elevator and guide screws to raise and lower the RIP motor. *~~with facilities to~~* Facilities also *rotate the* RIP *motor from vertical to horizontal and ~~place it on a cart~~* use a RIP motor cart and RIP motor container *for direct pull out to the R/B. The ~~equipment~~ platform rotates to facilitate alignment with the installed pump locations.*

(b) Attachment points for rigging the RIP heat exchanger into place. The RIP heat exchanger can be lowered straight down to the equipment platform.

(c) Access to the RIP equipment platform is via stairs. There is a ladder access to the RIP heat exchanger maintenance platform.

(d) The L/D equipment tunnel and hatch are utilized to remove the RIP motors from the lower drywell.

(e) The RIP motor servicing area is directly outside the L/D equipment hatch.

The 10 RIPs have wet induction motors in housings which protrude into the lower drywell from the RPV bottom head. These are in a circle at a radius of 3162.5 mm from the RPV centerline. For service, the motor is removed from below and outside, whereas the diffuser, impeller and shaft are removed from above and inside the RPV.

*The motor, with its lower flange attached, weighs approximately ~~32.36~~*32.41 *kN, is 830 mm in diameter and ~~1925~~*1975 *mm high. The flange has "ears" that extend from two sides, 180° apart. These ears, which are used to handle the motor, increase the flange diameter to 1200 mm for a width of 270 mm.*

The motor, suspended from ~~jack~~ guide *screws, is lowered straight down out of its housing onto the ~~equipment~~* RIP motor elevator on the rotating *platform*. A motor container is then installed. *The motor is then moved, circumferentially and lifted onto a rail-mounted transport cart for direct removal through the equipment removal L/D equipment tunnel and hatch.*

The motor is transported horizontally out of the containment and into the motor service shop immediately adjacent to the L/D equipment hatch.

The RIP servicing equipment includes the cart to transport the motor and its container *from the service area through the equipment hatch to the L/D ~~equipment~~* rotating *platform. The interface for this equipment is the rails on the ~~equipment~~* rotating *platform that permit locating the motor below its nozzle on the RPV. The servicing equipment includes a chain hoist for rotating the RIP motor from horizontal to vertical and a ~~hydraulic lift to raise it~~* RIP motor elevator that uses guide screws to raise the RIP motor *from the ~~equipment~~* rotating *platform to its installed position below the RPV. Facilities are provided for handling stud tensioners, blind flanges, other tools, drains and vents used in RIP servicing.*

Servicing of the RIP heat exchanger, such as removal of the tube bundle, will be accomplished by rigging to attachment points on the RPV pedestal and structural steel in the area. A direct vertical removal path is provided from the heat exchanger installed position to the equipment platform. The operation is performed by a chain hoist. This is considered to be a nonroutine servicing operation.

These RIPs are serviced only when the reactor is in a safe shutdown mode. In addition, there is no safety-related equipment below either the RIPs or the RIP heat exchangers. Inadvertent load drops of either component cannot cause either (1) a release of radioactivity, (2) a criticality accident, or (3)the inability to cool fuel within reactor vessel or spent fuel pool.

(2) Fine Motion Control Rod Drive

There are 205 FMCRDs in the L/D that require servicing. There are two types of servicing operations: (1) replacement of the FMCRD drive mechanism and (2) motor and seal replacement. Separate servicing equipment is provided for each of these operations.

(a) The FMCRD ~~servicing machine~~ handling equipment *has its own mechanisms for rotating and raising* from horizontal to vertical *FMCRD assemblies from a carrier on the equipment platform to their installed position. This ~~servicing machine~~* handling equipment *interfaces with the ~~L/D equipment~~* undervessel rotating *platform, which permits positioning the ~~servicing machine~~* handling equipment *under any of the 205 FMCRDs.*

(b) ~~A separate machine~~ Specialized devices *and cart are provided for ~~servicing~~* removal and installation of *FMCRD motors and seal assemblies and transporting them to the service shop located immediately outside the L/D equipment hatch.*

There is no safety-related equipment below either component. Inadvertent load drops by the FMCRD servicing equipment cannot cause either (1) a release of radioactivity, (2) a criticality accident, or (3) the inability to cool fuel within the reactor vessel or spent fuel pool.

9.1.5.2.2.3 Main Steam Tunnel Servicing Equipment

The main steam tunnel is a reinforced concrete structure that surrounds the main steamlines and feedwater lines. The safety-related valve area of the main steam tunnel is located inside the Reactor Building. Access to the main steam tunnel is during a refueling/servicing outage. At this time, MSIVs or feedwater isolation valves and/or feedwater check valves may be removed using permanent overhead monorail type hoists. They are transported by monorail out of the steam tunnel and placed on the floor below a ceiling removal hatch. Valves are then lifted through the ceiling hatch by valve service shop monorail. During shutdown, all of the piping and valves are not required to operate. Any load drop can only damage the other valves or piping within the main steam tunnel. Inadvertent load drops by the main steam tunnel servicing equipment cannot cause either:

(1) A release of radioactivity.

(2) A criticality accident.

(3) The inability to cool fuel within reactor vessel or spent fuel pool.

9.1.5.2.2.4 Other Servicing Equipment

In the Reactor Building and Control Building (except within the containment, within the main steam tunnel and on the refueling floor), no safety-related components of one division shall be routed over any portion of a safety-related portion of another division. A load drop accident in one division causing the complete loss of a second division is not credible. Hence, inadvertent load drops cannot cause either (1) a release of radioactivity, (2) a criticality accident, (3) the inability to cool fuel within reactor vessel or spent fuel pool, or (4) prevent the safe shutdown of the reactor. Therefore, all servicing equipment located outside the containment, the main steam tunnel, or the refueling floor are not subject to the requirements of Subsection 9.1.5.

9.1.5.3 Applicable Design Criteria For All OHLH Equipment

All handling equipment subject to heavy loads handling criteria will have ratings consistent with lifts required and the design loading will be visibly marked. Cranes/hoists or monorail hoists will pass over the centers of gravity of heavy equipment that is to be lifted. In locations where a single monorail or crane handles several pieces of equipment, the routing shall be such that each transported piece will pass clear of other parts. If, however, due to restricted overhead space the transported load cannot clear the installed equipment, then the monorail may be offset to provide transport clearance. A lifting eye offset in the ceiling over each piece of equipment can be used to provide a Y-lift so that the load can be lifted upward until free and then swung to position under the monorail for transport.

Pendant control is required for the bridge, trolley and auxiliary hoist to provide efficient handling of fuel shipping containers during receipt and also to handle fuel during new-fuel inspection. The crane control system will be selected considering the long lift required through the equipment hatch as well as the precise positioning requirements when handling the RPV and drywell heads, RPV internals, and the RPV head stud tensioner assembly. The control system will provide stepless regulated variable speed capability with high empty-hook speeds. Efficient handlings of the drywell and RPV heads and stud tensioner assembly require that the control system provide spotting control. Since fuel shipping cask handling involves a long duration lift, low speed and spotting control, thermal protection features will be incorporated.

Heavy load equipment is also used to handle light loads and related fuel handling tasks. Therefore, much of the handling systems and related design, descriptions, operations, and service task information of Subsection 9.1.4 is applicable here. The cross reference between the handling operations/equipment and Subsection 9.1.4 is provided in Table 9.1-7. See Table 9.1-8 for a summary of heavy load operation.

Transportation routing drawings will be made covering the transportation route of every piece of heavy load removable equipment from its installed location to the appropriate service shop or building exit. Routes will be arranged to prevent congestion and to assure safety while permitting a free flow of equipment being serviced. The frequency of transportation and usage of route will be documented based on the predicted number of times usage either per year and/or per refueling or service outage.

Safe load paths/routing will comply with the requirements of NUREG-0612, Subsection 5.1.1(1).

9.1.5.4 Equipment Operating Procedures Maintenance and Service

Each item of equipment requiring servicing will be described on an interface control diagram (ICD), delineating the space around the equipment required for servicing. This will include pull space for internal parts, access for tools, handling equipment, and alignment requirements. The ICD will specify the weights of large removable parts, show the location of their centers of gravity, and describe installed lifting accommodations such as eyes and trunnions. An instruction manual will describe maintenance procedures for each piece of equipment to be handled for servicing. Each

manual will contain suggestions for rigging and lifting of heavy parts and identify any special lifting or handling tools required.

All major handling equipment components (e.g., cranes, hoist, etc.) will be provided with an operating instruction and maintenance manual for reference and utilization by operations personnel. The handling equipment operating procedure will comply with the requirements of NUREG-0612, Subsection 5.1.1(2).

9.1.5.5 Safety Evaluations

The cranes, hoists, and related lifting devices used for handling heavy loads either satisfy the single-failure guidelines of NUREG-0612, Subsection 5.1.6, including NUREG-0554 or evaluations are made to demonstrate compliance with the recommended guidelines of Section 5.1, including Subsections 5.1.4 and 5.1.5.

The ~~equipment handling components~~ ~~12.33~~14.71 kN hoist on the refueling machine for handling RIP components *~~over the fuel pool are~~* is *designed to meet the single-failure-proof criteria ~~to satisfy~~* of *NUREG-0554. Redundant safety interlocks and limit switches are provided to prevent transporting heavy loads other than spent fuel by the refueling ~~bridge crane~~* machine *over any spent fuel that is stored in the spent-fuel storage pool.*

A transportation routing study will be made of all planned heavy load handling moves to evaluate and minimize safety risks.

Safety evaluations of related light loads and refueling handling tasks in which heavy load equipment is also used are covered in Subsection 9.1.4.3.

The CRD and RIP maintenance equipment on the rotating bridge below the RPV used during refueling operation will be withdrawn through the personnel equipment tunnel to outside primary containment.

9.1.5.6 Inspection and Testing

Heavy load handling equipment is subject to the strict controls of Quality Assurance (QA), incorporating the requirements of 10 CFR 50 Appendix B. Components defined as essential to safety have an additional set of engineering specified "Quality Requirements" that identify safety-related features which require specific QA verification of compliance to drawing/specification requirements.

Prior to shipment, every lifting equipment component requiring inspection will be reviewed by QA for compliance and that the required records are available. Qualification load and performance testing, including nondestructive examination (NDE) and dimensional inspection on heavy load handling equipment, will be performed prior to QA acceptance. Tests may include load capacity, safety overloads, life cycle, sequence of operations and functional areas.

When equipment is received at the site, it will be inspected to ensure that no damage has occurred during transit or storage. Prior to use and at periodic intervals, each piece of equipment will be tested again to ensure that the electrical and/or mechanical functions are operational, including visual and, if required, NDE inspection.

Crane inspections and testing will comply with the requirements of ANSI B30.2 and NUREG-0612, Subsection 5.1.1(6).

9.1.5.7 Instrumentation Requirements

The majority of the heavy load handling equipment is manually operated and controlled by the operator's visual observations. This type of operation does not necessitate the need for a dynamic instrumentation system.

Load cells may be installed to provide automatic shutdown whenever threshold limits are exceeded for critical load handling operations to prevent overloading.

9.1.5.8 Operational Responsibilities

Critical heavy load handling in operation of the plant shall include the following documented program for safe administration and safe implementation of operations and control of heavy load handling systems:

(1) Heavy Load Handling System and Equipment Operating Procedures

(2) Heavy Load Handling Equipment Maintenance Procedures and/or Manuals

(3) Heavy Load Handling Equipment Inspection and Test Plans; NDE, Visual, etc.

(4) Heavy Load Handling Safe Load Paths and Routing Plans

(5) QA Program to Monitor and Assure Implementation and Compliance of Heavy Load Handling Operations and Controls

(6) Operator Qualifications, Training and Control Program

See Subsection 9.1.6.6 for COL license information.

9.1.6 COL License Information

9.1.6.1 New Fuel Storage Racks Criticality Analysis

The following standard supplement addresses COL License Information Item 9.1.

The COL applicant shall provide the NRC a confirmatory criticality analysis for the inadvertent placement of a fuel assembly in other that prescribed locations as required by Subsection 9.1.1.1.1.

The new fuel racks in the new fuel vault were eliminated from the STP 3 & 4 design by STP DEP T1 2.5-1. New fuel will be stored in the fuel storage pool.

See Subsection 9.1.6.3

9.1.6.2 Dynamic and Impact Analyses of New Fuel Storage Racks

The following standard supplement addresses COL License Information Item 9.2.

The COL applicant shall provide the NRC confirmatory dynamic and impact analyses of the new fuel storage racks, as requested by Subsection 9.1.1.1.6.

The new fuel storage racks in the new fuel vault were eliminated by STP DEP T1 2.5-1. New fuel will be stored in the fuel storage pool.

See Subsections 9.1.6.4 and 9.1.6.7

9.1.6.3 Spent Fuel Storage Racks Criticality Analysis

The following standard supplement addresses COL License Information Item 9.3.

The COL applicant shall provide the NRC a confirmatory critically analysis for the inadvertent placement of a fuel assembly in other than prescribed locations, as required by Subsection 9.1.2.3.1. The vendor information described by Subsection 9.1.2.3.1 will be provided in Holtec International "Licensing Report for South Texas Project UNITS 3 & 4 ABWR Spent Fuel Racks" (HI-2135462).

9.1.6.4 Spent Fuel Racks Load Drop Analysis

The following standard supplement addresses COL License Information Item 9.4.

The COL applicant shall provide the NRC a confirmatory load drop analysis, as required by Subsection 9.1.4.3. The vendor information described by Subsection 9.1.4.3 will be provided in Holtec International "Licensing Report for South Texas Project UNITS 3 & 4 ABWR Spent Fuel Racks" (HI-2135462).

9.1.6.5 New Fuel Inspection Stand Seismic Capability

The following standard supplement addresses COL License Information Item 9.5.

The COL applicant shall install the new fuel inspection stand firmly to the wall so that it does not fall into or dump personnel into the spent fuel pool during an SSE (Subsection 9.1.4.2.3.2). The risk of dumping personnel or the fuel inspection stand into the spent fuel pool during an SSE has been addressed by a modified stand design. The improved stand design is anchored in a refueling floor pit such that it cannot fall into the fuel pool during an SSE.

9.1.6.6 Overhead Load Handling System Information

The following standard supplement addresses COL License Information Item 9.6.

The COL applicant shall provide a list of all cranes, hoists, and elevators and their lifting capacities, including any limit and safety devices required for automatic and manual operation. This information is vendor specific and will be established following equipment procurement. Appropriate descriptions will be added with an FSAR amendment in accordance with 10 CFR 50.71(e) prior to receipt of fuel. (COM 9.1-3)

In addition, for all such equipment, the COL applicant shall provide the following information:

(1) Heavy load handling system operating and equipment maintenance procedures.

(2) Heavy load handling system and equipment maintenance procedures and/or manuals.

(3) Heavy load handling system and equipment inspection and test plans; NDE, visual, etc.

(4) Heavy load handling safe load paths and routing plans.

(5) QA program to monitor and assure implementation and compliance of heavy load handling operations and controls.

(6) Operator qualifications, training and control program.

The information above is either vendor specific and will be established following equipment procurement, or involves associated programs that will be developed as the equipment is procured. Procedures containing elements of the heavy load handling program outlined in Regulatory Guide 1.206, Section C.I.9.1.5 and NUREG-0612 will be developed as part of the Plant Operating Procedures Development Plan contained in Subsections 13.5.3.1 and 13.5.3.4.1. (COM 9.1-3).

9.1.6.7 Spent Fuel Racks Structural Evaluation

The following standard supplement addresses COL License Information Item 9.7.

The COL applicant shall provide the NRC a confirmatory structural evaluation of the spent fuel racks, as outlined in Subsection 9.1.2.1.3. The vendor information described by Subsection 9.1.2.1.3 will be provided in Holtec International “Licensing Report for South Texas Project UNITS 3 & 4 ABWR Spent Fuel Racks” (HI-2135462).

9.1.6.8 Spent Fuel Racks Thermal-Hydraulic Analysis

The following standard supplement addresses COL License Information Item 9.8.

The COL applicant shall provide the NRC confirmatory thermal-hydraulic analysis that evaluates the rate of naturally circulated flow and the maximum rack water exit temperatures, as required by Subsection 9.1.2.1.4. Holtec International Licensing Report HI-2135462, Chapter 5, Thermal-Hydraulic Evaluation, provides the required analyses.

Fuel bundle data in the analysis will use maximum decay heat generation rates for worst case power history. Natural circulation flow through the rack arrangement prevents water temperatures from exceeding 100°C under normal, abnormal, and accident conditions.

9.1.6.9 Spent Fuel Firewater Makeup Procedures and Training

The following standard supplement addresses COL License Information Item 9.9.

The COL applicant shall develop detailed procedures and operator training for providing firewater makeup to the spent fuel pool (Subsection 9.1.3.3). Firewater makeup procedures and training will be in place and available onsite for inspection prior to fuel load. (COM 9.1-5).

9.1.6.10 Protection of RHR System Connections to FPC System

The following standard supplement addresses COL License Information Item 9.10.

The COL applicant shall assure that the RHR system connections are adequately protected from the effects of pipe whip, internal flooding, internally generated missiles, and the effects of a moderate energy pipe rupture in the vicinity (Subsection 9.1.3.3).

The NRC staff will be notified of the availability of the design analyses that assure the RHR system connections are adequetely protected from the effects of pipe whip, internal flooding, internally generated missiles, and the effects of a moderate energy pipe rupture in the vicinity, prior to installation of the RHR system or components. The necessary details of that information will be provided in the next COLA revision occurring beyond three months after completion of the analyses.

The as-built analysis is dependent on plant walk-downs to identify as-built plant conditions in the vicinity of the RHR connections. A description of this analysis will be provided in an FSAR amendment in accordance with 10 CFR 50.71(e) prior to fuel load. (COM 9.1-6)

Flood protection for RHR system connections will be evaluated in accordance with SRP 3.4.1. Internal Missile probability will be shown by analysis to be less than 10^{-7} per year or approved methods of missile protection will be implemented in accordance with SRP 3.5.1.1.

RHR protection against moderate energy pipe failures will be analyzed in accordance with SRP 3.6.1.

Table additions and deletions for departures have been incorporated using regular font for clarity. Tables 9.1-9, 9.1-10, and 9.1-12 have no changes from ABWR DCD.

9.1.7S References

9.1-1 Holtec International “Licensing Report for South Texas Project UNITS 3 & 4 ABWR Spent Fuel Racks” (HI-2135462).

Table 9.1-1 Not Used

Table 9.1-2 Fuel Servicing Equipment

No.	Component Identification	Safety Classification *	Quality Requirements†	Seismic Category‡
1	Fuel Prep Machine	N	E	NA
2	New Fuel Inspection Stand	N	E	O
3	Channel Bolt Wrench	N	E	NA
4	Channel-Handling Tool	N	E	NA
5	General-Purpose Grapple	N	E	NA
6	Refueling Machine	N	E	I
7	Channel-Handling Boom	N	E	NA
8	Jib Crane	N	E	O

* N = Non-nuclear safety-related
2 = Safety Class

† E = Elements of 10 CFR 50 Appendix B are generally applied, commensurate with the importance of the requirement function.

‡ NA = No Seismic Requirements
O = Designed to hold its load in a SSE
I = Seismic Category I

Table 9.1-3 Reactor Vessel Servicing Equipment

No.	Essential Component Identification	Safety Classification*	Quality Requirements†	Seismic Category‡
1	Reactor Vessel Service Tools	N	E	NA
2	Steamline Plug	N	E	NA
3	Shroud Head Bolt Wrench	N	E	NA
4	Head Holding Pedestal	N	E	I
5	Head Stud Rack	N	E	NA
6	Dryer and Separator Strongback	N	E	NA[ƒ]
7	~~*RPV Head Strongback and Stud Tensioner System*~~RPV Head Stud Tensioner System with RPV Head Strongback	~~2/~~N	E	NA
8	RIP Impeller / Shaft Handling Device (Grapple)	N	E	NA
9	RIP Impeller Rack	N	E	NA
10	Fuel Assembly Sampler	N	E	NA

* N = Non-nuclear safety related
2 = Safety Class

† E = Elements of 10 CFR 50 Appendix B are generally applied, commensurate with the importance of the requirement function.

‡ NA = No Seismic Requirements
I = Seismic Category I

ƒ Dynamic analysis methods for seismic loading are not applicable, as this equipment is supported by the reactor service crane. Lifting devices have been designed with a minimum safety factor of 10 or utilize a dual load path with a factor of safety of 5:1 and undergo proof testing.

Table 9.1-4 Under-Reactor Vessel Servicing Equipment and Tools

No.	Equipment/Tool	Safety Class	Seismic Category
1	FMCRD Handling Equipment	N	NA
2	Undervessel Rotating Platform	N	NA
3	RIP Motor Servicing Equipment	N	NA

Notes:
NA=No Seismic Requirements
N =Non-nuclear safety-related

Table 9.1-5 Tools and Servicing Equipment

Fuel Servicing Equipment	**Refueling Equipment**
Channel Handling Boom Fuel Preparation Machines New Fuel Inspection Stand Channel Bolt Wrenches Channel Handling Tool General-Purpose Grapples	Refueling Machine
Servicing Aids	**Storage Equipment**
Pool Tool Accessories Actuating Poles General Area Underwater Lights Local Area Underwater Lights Drop Lights Underwater TV Monitoring System Underwater Vacuum Cleaner Viewing Aids Light Support Brackets Auxiliary Platform	Fuel Storage Racks Channel Storage Racks Defective Fuel Storage Containers ~~*In-Vessel Racks*~~ CR Guide Tube Storage Rack CR Storage Rack Equipment Storage Rack
Reactor Vessel Servicing Equipment	**Under-Reactor Vessel Servicing Equipment**
Reactor Vessel Servicing Tools Steamline Plugs and Installation Tools Shroud Head Bolt Wrenches Head Holding Pedestals Head Stud Rack Dryer-Separator Strongback ~~*RPV Head Strongback with Stud Tensioning System*~~ RPV Head Stud Tensioner System with RPV Head Strongback Fuel Assembly Sampler	Fine Motion Control Rod Drive Servicing Tools CRD Hydraulic System Tools FMCRD Handling Equipment Handling Platform Incore Monitoring Seal Flushing Equipment RIP Motor Handling Equipment RIP Motor and FMCRD Carts RIP and FMCRD Maintenance Equipment
In-Vessel Servicing Equipment	
Instrument Strongback Control Rod Grapple (Fuel Pool) Control Rod Guide Tube Grapple ~~*Dual Control Blade &*~~Control Rod and Fuel Support Grapple Grid Guide Instrument Handling Tool Control Rod Guide Tube Seal Incore Guide Tube Seals RIP Impeller/Shaft Handling Grapple RIP Diffuser/Stretch Tube Handling Attachment Blade Guides RIP Handling Tools	

Table 9.1-6 Reference Codes and Standards

Number	Title
ANS-N14.6	Standard for Special Lifting Devices for Shipping Containers Weighing (5 ton) or More for Nuclear Materials
ANSI B30.9	“Slings”
ANSI B30.10	“Hooks”
ANSI B30.2	Performance Standards for Overhead Electric Wire Rope Hoists
ANSI B30.16	Performance Standards for Air Wire Rope Hoists
ANSI B30.11	Overhead and Gantry Crane
ANSI 57.1	Design Requirements For Light Water Reactor Fuel Handling Systems
ANSI 57.2	Design Requirements For Light Water Reactor Spent Fuel Storage Facilities At Nuclear Power Plants
ANSI 57.3	Design Requirements For New Fuel Storage Facilities At Light Water Reactor Plants
ASME NOG-1	Rules For Construction Of Overhead And Gantry Cranes
CMAA70	Specifications for Electric Overhead Travelling Cranes
NUREG-0554	Single-Failure-Proof Cranes for Nuclear Power Plants
NUREG-0612	Control of Heavy Loads at Nuclear Power Plants
NUREG-0800	Standard Review Plan For Review Of Safety Analysis Reports For Nuclear Power Plants

Table 9.1-7 Heavy Load Equipment Used to Handle Light Loads and Related Refueling Handling Tasks

Handling Operations/Equipment	Applicable Light Load Handling Subsections
Overhead Bridge Cranes Reactor Building Crane	9.1.4.2.2 9.1.4.2.2
Fuel Servicing Equipment	9.1.4.2.3
Servicing Aids	9.1.4.2.4
Reactor Vessel Servicing Equipment Steamline Plug Head Stud Rack Dryer/Separator Strongback ~~*RPV Head Strongback and Stud Tensioning System*~~ RPV Head Stud Tensioner System with RPV Head Strongback	9.1.4.2.5
In-Vessel Servicing Equipment	9.1.4.2.6
Refueling Equipment Refueling Machine Storage Equipment Under-Reactor Vessel Servicing Equipment Fuel Handling Service Tasks Reactor Shutdown Handling Tasks Drywell Head Removal Reactor Well Servicing Reactor Vessel Head Removal Dryer Removal Separator Removal Refueling Vessel Closure	9.1.4.2.7 thru 9.1.4.2.10

Table 9.1-8 Heavy Load Operations

Hardware Handling Tasks	Handling Systems*	Handling Equipment	In-Plant Location Elevation
RPV Opening/Closing Operations:			
Drywell—Shield Blocks: Removal, storage and reinstallation	RBS	RB Crane Main Hoist	RB 26700 RF 26700
D/S Pool, Spent Fuel Pool, Fuel Cask Pit, Shield Plugs and Pool Seal Gates Removal, reinstallation and storage on the refueling floor on in the D/S Pool	RBS	RB Crane Main or Auxiliary Hoist, Slings and Strongbacks	RF 26700 D/S P 18700
Drywell Head Removal, storage and reinstallation	RBS	RB Crane Main Hoist Drywell Head Strongback	RF 26700 R/W 23700
Reactor Vessel Head Insulation Removal, storage and reinstallation	RBS	RB Crane Main Hoist Lifting Sling	RF 26700 R/W 18700
Reactor Vessel Head Removal, storage and reinstallation, includes handling stud tensioner studs, nuts, ~~*head strongback*~~RPV Head Stud Tensioner System with RPV Head Strongback	RBS	RB Crane Main Hoist Auxiliary Hoist ~~*Head Strongback/ Carousel*~~ RPV Head Stud Tensioner System with RPV Head Strongback RPV Head Support Pedestal	RF 26700 RW 18700
Steam Dryer Removal, storage and reinstallation	RBS	RB Crane Main Hoist Dryer/Separator Strongback	RW 18700 D/SP 18700 IRV 14500
D/SP Cover Plates Removal, storage and reinstallation	RBS	RB Crane Auxiliary Hoist Lifting Slings	RF 26700

Table 9.1-8 Heavy Load Operations (Continued)

Hardware Handling Tasks	Handling Systems*	Handling Equipment	In-Plant Location Elevation
RPV Opening/Closing Operations: (Continued)			
Steam Plugs Temporary Tool Installation and removal	RBS	RB Crane Auxiliary Hoist 4447 N Chain Hoist Service Platform Refueling Machine	RF 26700 IRV 15500
Steam Separator/Shroud Head Removal, storage and reinstallation. Include unbolting shroud head bolts from Refueling Platform	RBS	RB Crane Main Hoist Dryer/Separator Refueling Machine	RW 18700 IRV 9500 D/SP 18700
Refueling Operations:			
New-Fuel: Receive at G/F & lift to RF Receiving, inspection, remove outer container	RBS	RB Crane Auxiliary Hoist	RB 7300 RF 26700
Remove inner container. Move fuel to new fuel inspection stand, inspect.	RBS	RB Crane Auxiliary Hoist	RF 26700 NFI 18700
Move new fuel to fuel pool, storage of fuel channel fixtures. Channel new fuel and store. Move channeled fuel and load into reactor core.	RBS	RB Crane Auxiliary Hoist Refueling Machine Auxiliary Hoist Fuel Grapple	NFI 18700 FSP 14800 FCF 14800 RF 26700 RVC 9500
Fuel Cask: Receive, lift to refueling floor. Lower into cask washdown area, washdown and move to load pit. Move spent fuel to cask load pit. Move loaded cask to cask washdown area. Move cask to G/F for shipment.	RBS	RB Crane Main Hoist Auxiliary Hoist Refueling Machine Auxiliary Hoists Fuel Grapple	G/F 7300 RF 26700 FWP 18700 FLP 14800
Reactor Service Operations:			
Control Rod Blades Replacement including adjacent fuel bundles using blade guides, moving and storage in equipment storage rack and blade guide removal & installation. Fuel support removal and reinstallation.	RBS	Refueling Machine Auxiliary Hoists Fuel Grapple ~~*Dual Fuel Support Grapple / Control Rod Grapple*~~Control Rod and Fuel Support Grapple	RVC 9500 RV 5300
Control Rod Guide Tube (CRGT) (Nonroutine) removal & replacement. Prior removal of control rod, fuel, fuel support and blade guide. See above.	RBS	Refueling Machine Auxiliary Hoists CRGT Grapple	RVC 5300

Table 9.1-8 Heavy Load Operations (Continued)

Hardware Handling Tasks	Handling Systems*	Handling Equipment	In-Plant Location Elevation
Internal Recirculation Pump Servicing: Removal of pump impeller shaft, diffuser, wear ring, piston ring and stretch tube through annulus between shroud and RPV I.D. wall. Move impeller to fuel storage pool.	RBS	Refueling Machine Auxiliary Hoist Service Platform Pump Impeller Grapple	FSP 18700 IRV 3000
Upper Drywell Servicing			
MSIVs and SRVs Servicing: removal, installation, and transportation for repair and calibrations from installed location to RCCV entrance and up to special service room area and return.	UDS SRM(C)	Monorail for servicing MSIVs and SRVs Monorail Hoist Transportation Cart Hatchway Hoist Wall Mount	UDW 12500 RB 12500 RB 18700 SRM 18700(c)
	MSS	Steam Tunnel Crane Hoist Transportation Cart Hatchway Hoist Wall Mount	MST 12500 SRM 18700(c)

Table 9.1-8 Heavy Load Operations (Continued)

Hardware Handling Tasks	Handling Systems*	Handling Equipment	In-Plant Location Elevation
Lower Drywell Servicing:			
RIPs Motors Removal and installation and transport to service area and return during maintenance.	LDS SRM(B)	Jack Screws Transportation Cart Equipment Platform Turntable L/D RIP Hoist	L/D(–)2500 L/D(–)6700 SRM(–)6700 (C)
RIP Heat Exchangers Removal and installation for replacement or servicing	LDS RBS	Special Rigging Transportation Cart Equipment Platform L/D RIP Hoist	L/D(–)2500 L/D(–)6700 R/B(–)6700 R/B(–)7300
FMCRD Control Rod Drives Removal and installation from/to RPV for maintenance	LDS SRM(A)	~~*FMCRD Remote Handling Machine*~~ FMCRD Handling Equipment	LDW/URV (–)6700
(1) Motor and seal replacement	~~*SRM(A)*~~LDS	FMCRD Handling Equipment	
(2) FMCRD drive mechanism replacement	LDS	~~*FMCRD motor servicing machine*~~ FMCRD Handling Equipment	SRM(–)6700(A)
(3) Move CRD hardware to service room area for service	LDS SRM(A)	Lifting/handling device to move CRD hardware to service room area for service	LDW(–)6700 SRM(–)6700(A)
Neutron Monitor Sensor Replacement and servicing	LDS RBS	Refueling Platform Auxiliary Hoist Special Tools cask onto tunnel track.	RVC 5300

* See Table 9.1-9 for Legend.

Table 9.1-9 Legend for In-Plant Locations/Elevations

Elevations	Legend	Location/Description
18700	D/SP	Dryer/Separator Storage Pool
14800	FCF	Fuel Channeling Fixtures
18700 14800	FSP	Fuel Storage Pool
14800	FLP	Fuel Cask Load Pit
18700	FWP	Fuel Cask Wash Pit
7300	G/F	Ground Floor Equipment Access
18700 3000	IRV	Inside Reactor Vessel
(–)6700	LDW	Lower Drywell Area Receiving
7300	MST	Main Steam Tunnel Area
18700	NFI	New Fuel Inspection Stand
18700	NFS	New Fuel Storage Vault
33200 to 7300	RB	Reactor Building
26700	RF	Refueling Floor
9500	RVC	Reactor Vessel Core (TOP)
18700	RW	Reactor Well (TOP RPV)
18700(C) (–)6700(A) & (B)	SRM	Service Rooms: (a) CRD (b) RIP (c) MSIV & SRV
26,700 to 7300	D/W	Drywell Area
	LDS	Lower Drywell Servicing
	MSS	Main Steam Tunnel Servicing
	RBS	Reactor Building Servicing
	SSR	Special Service Rooms
	UDS	Upper Drywell Servicing

Table 9.1-10 Single-Failure-Proof Cranes

1. Reactor Building crane
2. Refueling machine crane

Table 9.1-11 Fuel Pool Cooling Heat Exchanger and Performance Data

Number of units	2
Seismic	Category I design and analysis
Types of exchangers	Horizontal U-tube/shell
Maximum primary/secondary side pressure	1.499 MPaG/1.034 MPaG
Design Condition	Normal heat load operating mode
Primary side (tube side) performance data:	
(1)Flow	250 m^3/h
(2)Inlet temperature	52°C maximum
(3)Allowable pressure drop	0.055 MPa Max.
(4)Exchanged heat	6.91 GJ/hr
Secondary side (shell side) performance data:	
(1)Flow	280 m^3/h
(2)Inlet temperature	~~39~~37.8°C maximum
(3)Allowable pressure drop	0.039 MPa Max.
(4)Type of cooling water	RCW water

Table 9.1-12 RHR-FPC Joint Heat Removal Performance Table (150 Hours Following Shutdown)

RHR-FCP Cooling Loops Combination	Maximum Heat Load *@ time = 0 t_0=150 hours	Pool Temp @ time = 0 t_0=150 hours	Maximum Pool Temp	Cooling Time to Max. Temp. From t=0
2-RHR Hx's + 2-FPC Hx's	46.1 GJ/h	52°C	52°C	t=0
2-RHR Hx's + 1-FPC Hx	46.1 GJ/h	52°C	52°C	t=0
1-RHR Hx + 2-FPC Hx's	46.1 GJ/h	52°C	54°C	~~Ý~~≈8 h
1-RHR Hx + 1-FPC Hx	46.1 GJ/h	52°C	58°C	~~Ý~~≈12 h

* Heat load based on BTP ASB 9-2

The following figures are located in Chapter 21:

- **Figure 9.1-1 Fuel Pool Cooling and Cleanup System P&ID (Sheets 1-3)**
- **Figure 9.1-2 Fuel Pool Cooling and Cleanup System PFD (Sheets 1-2)**

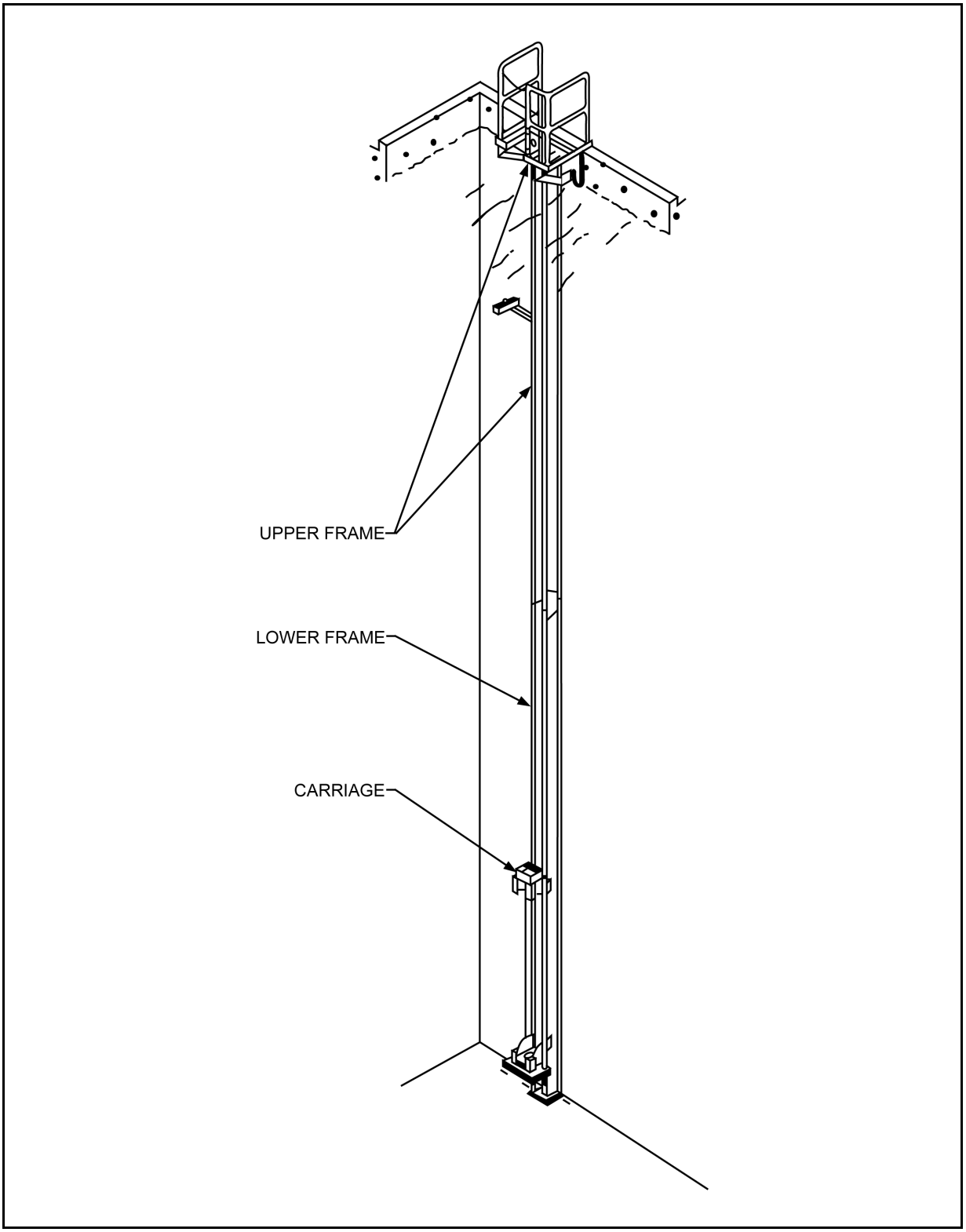

Figure 9.1-3 Fuel Preparation Machine Shown Installed in Facsimile Fuel Pool

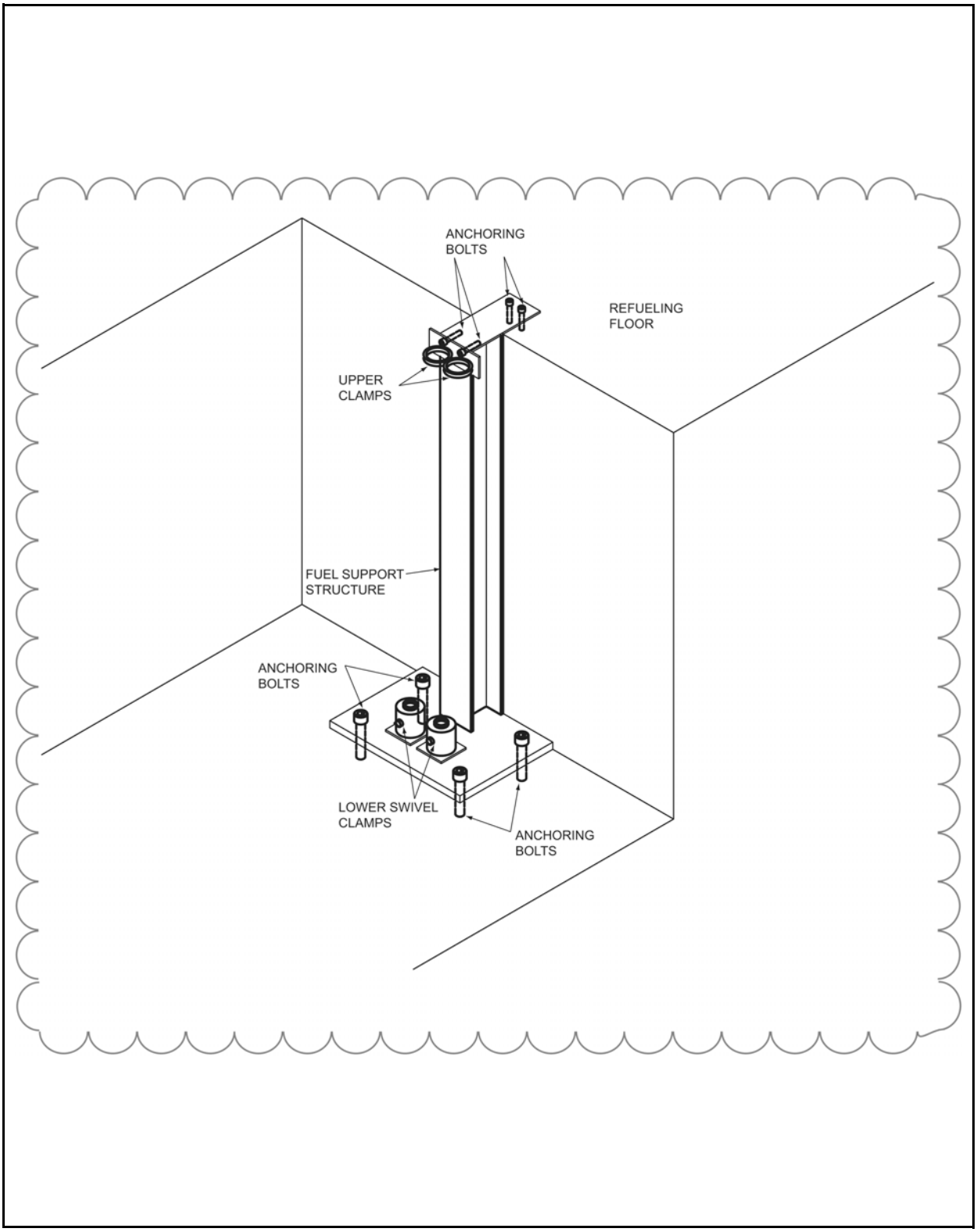

Figure 9.1-4 New-Fuel Inspection Stand

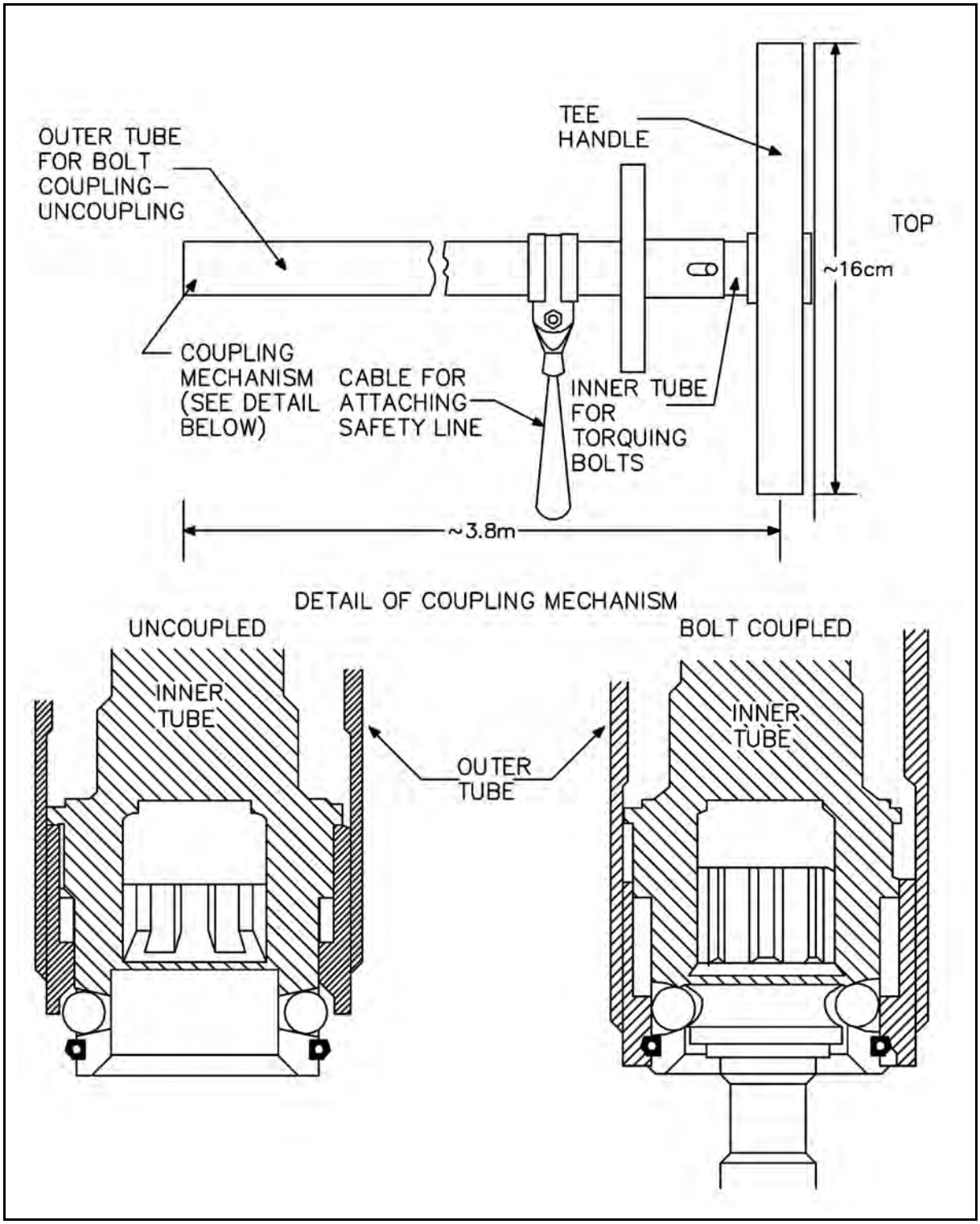

Figure 9.1-5 Channel Bolt Wrench

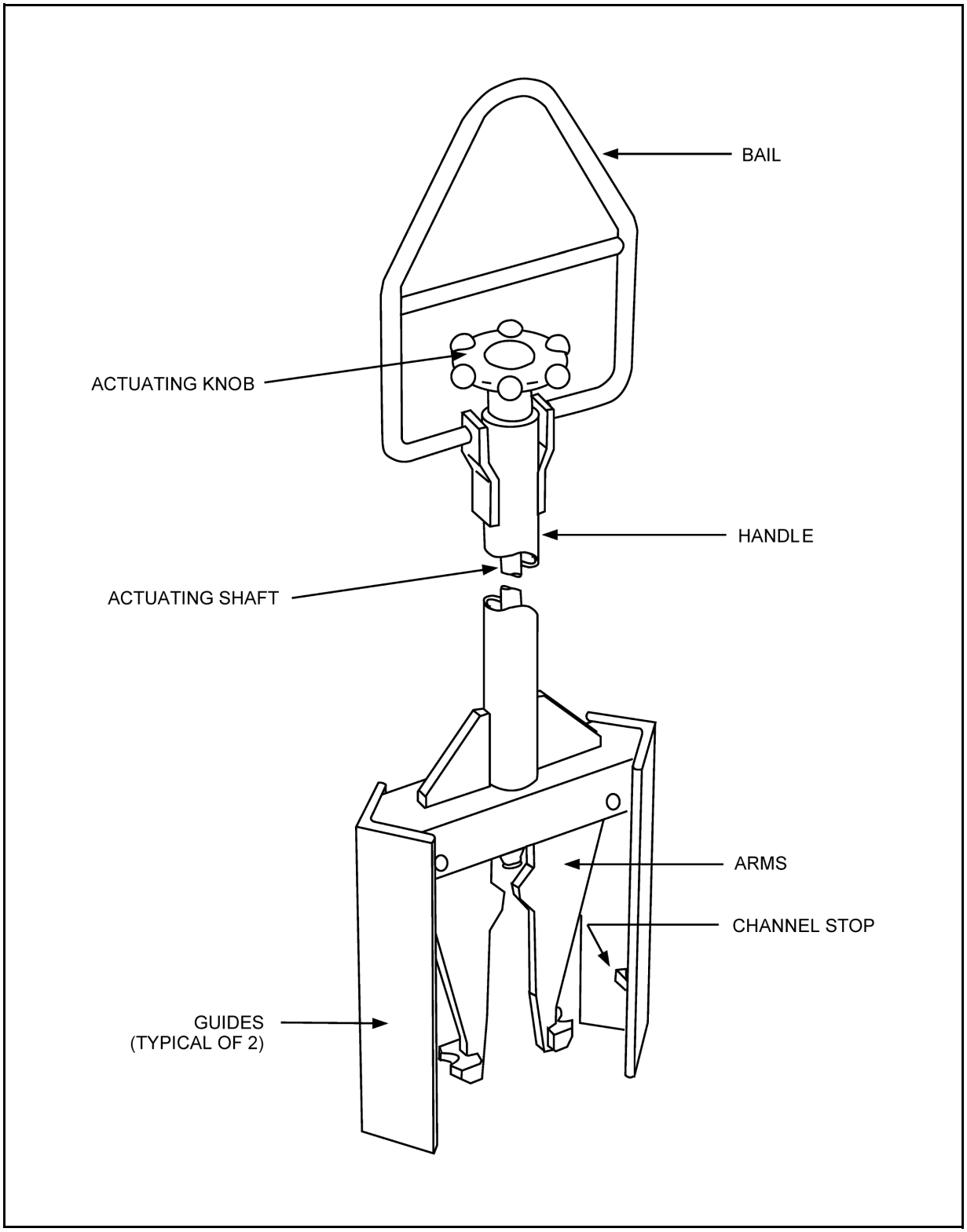

Figure 9.1-6 Channel-Handling Tool

Figure 9.1-7 ~~*Fuel Pool Vacuum Sipper*~~ Not Used

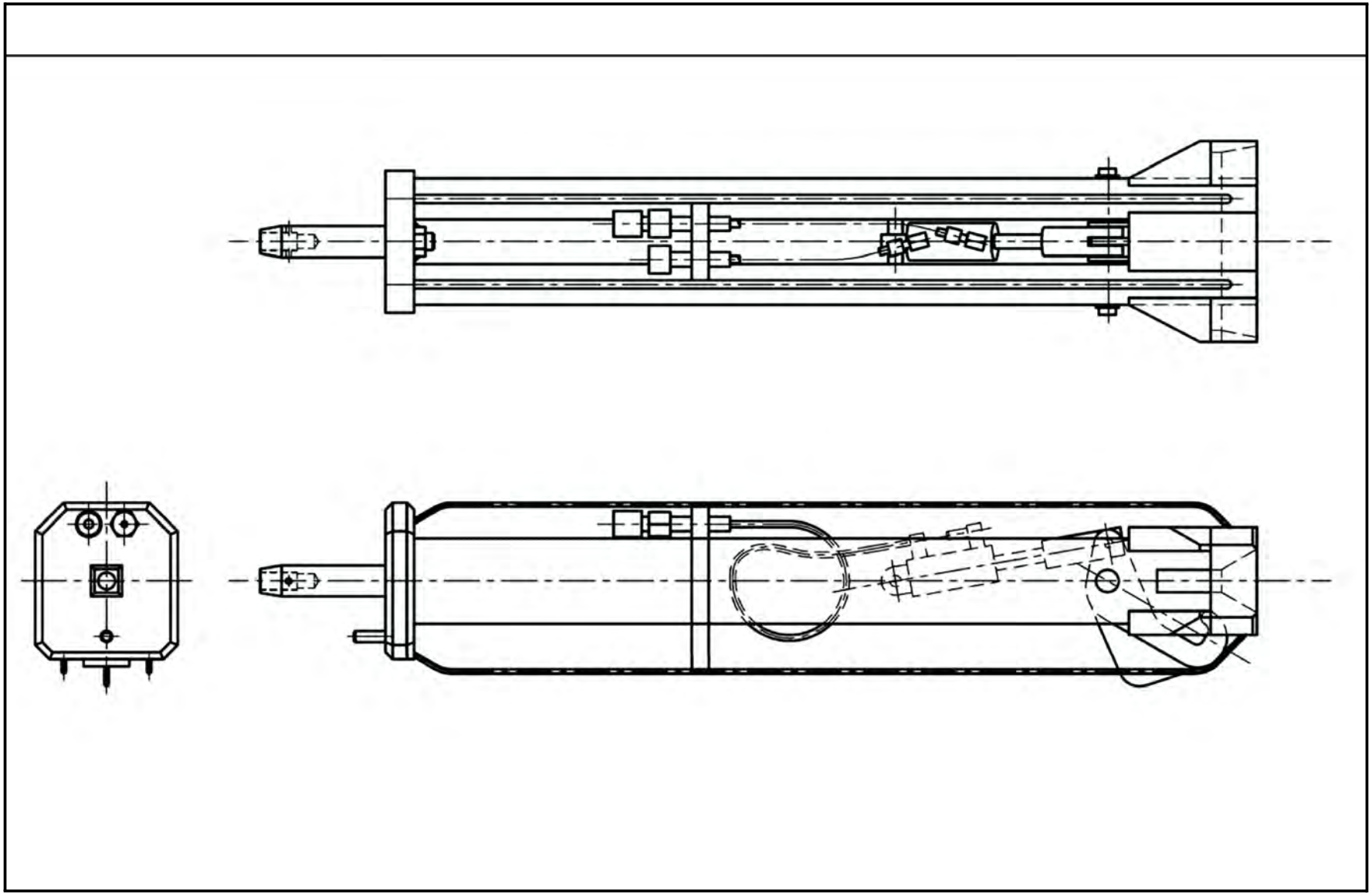

Figure 9.1-8 General-Purpose Grapple

Figure 9.1-9 Not Used

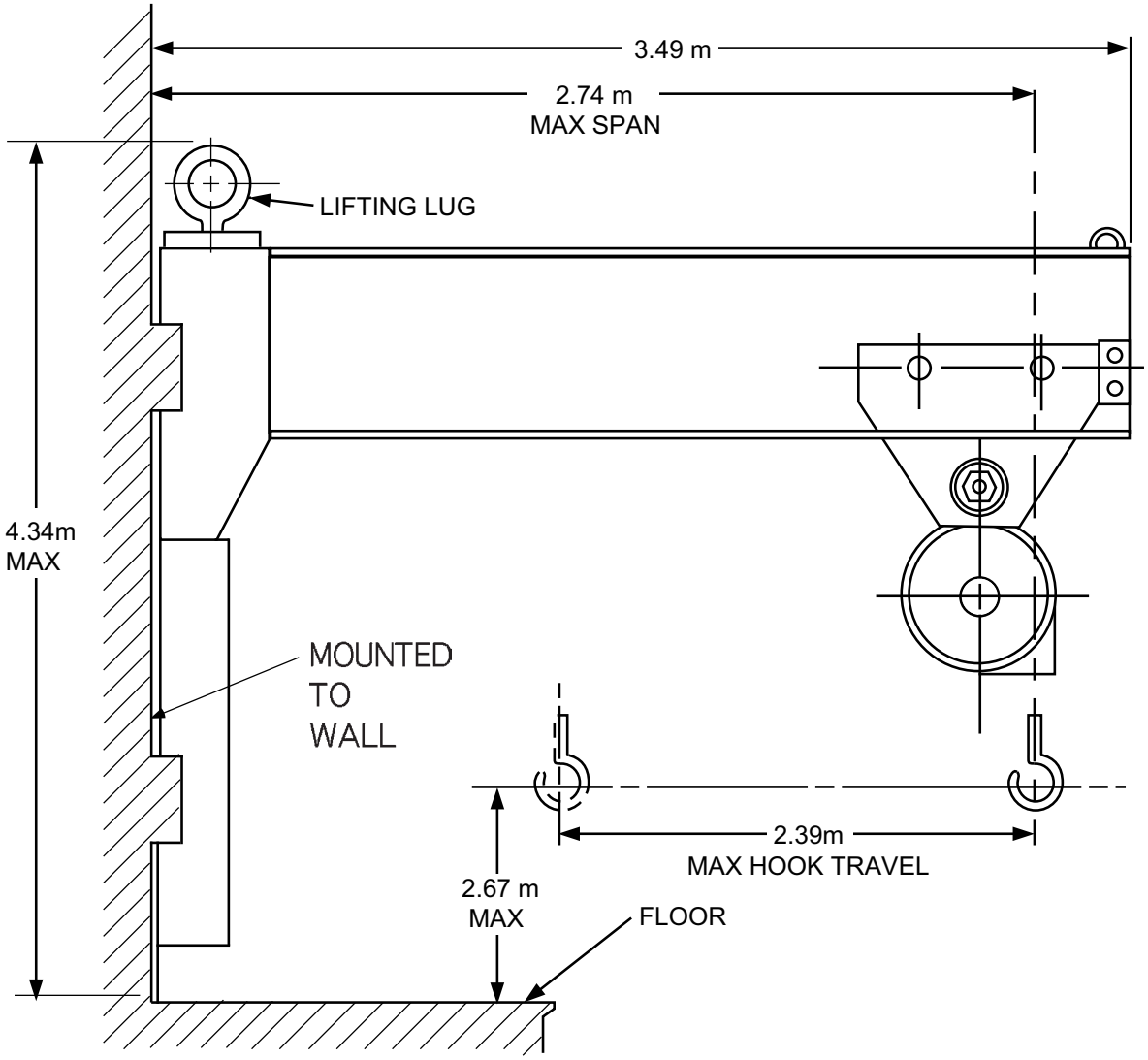

Figure 9.1-10 Jib Crane Channel-Handling Boom

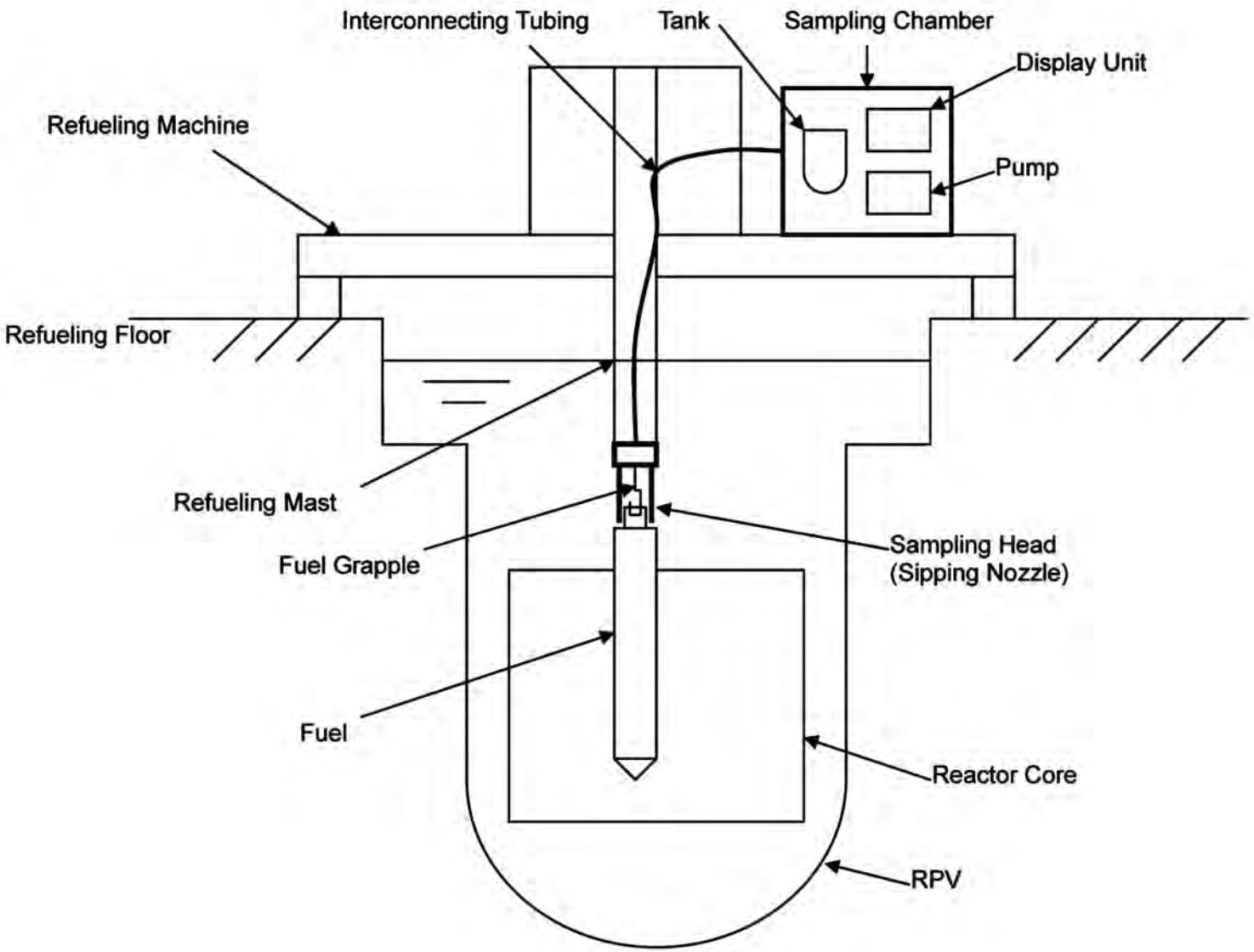

Figure 9.1-11 Fuel Assembly Sampler ~~Not Used~~

The following figure is located in Chapter 21:

- **Figure 9.1-12 Plant Refueling and Servicing Sequence**

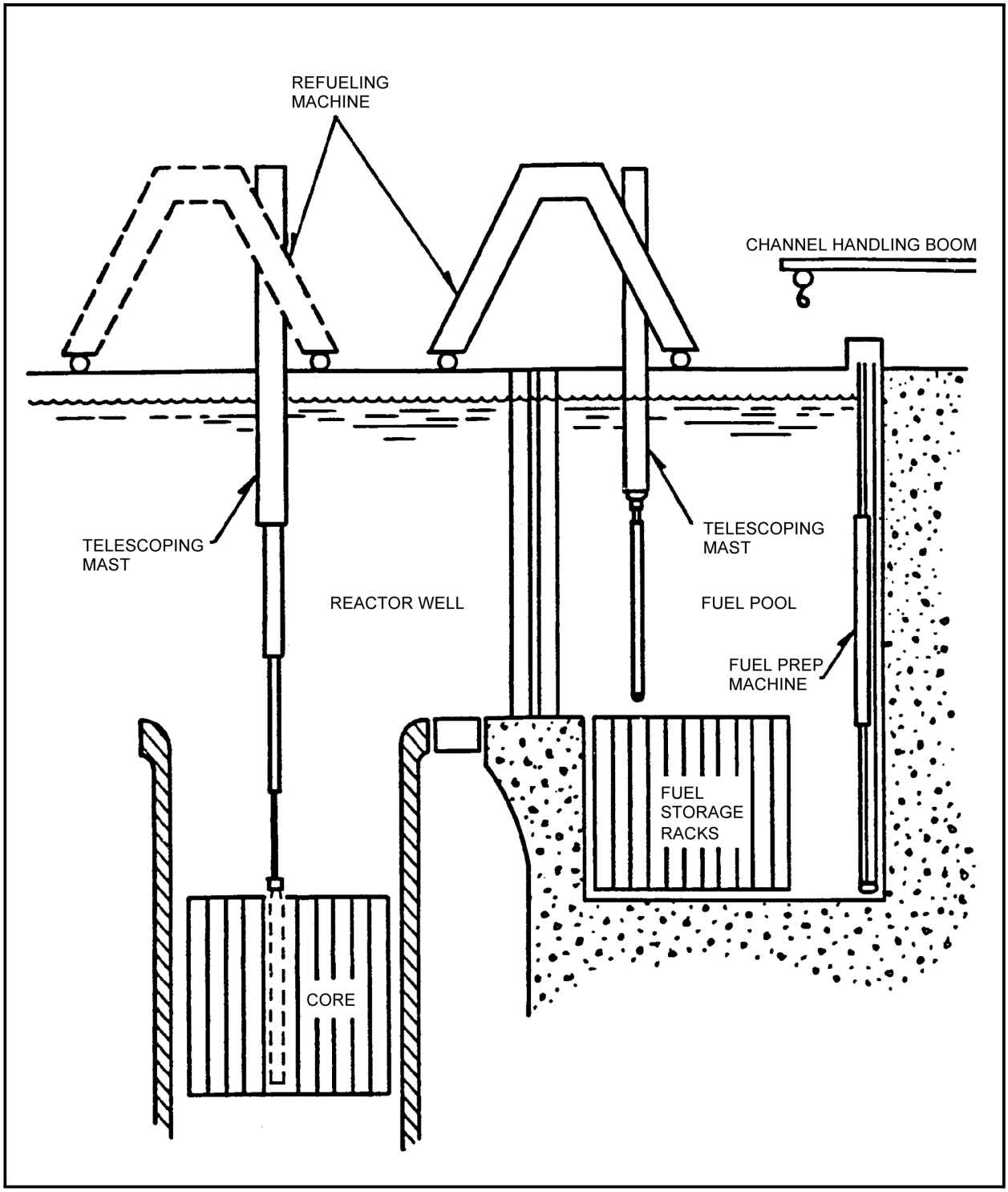

Figure 9.1-13 Simplified Section of Refueling Facilites

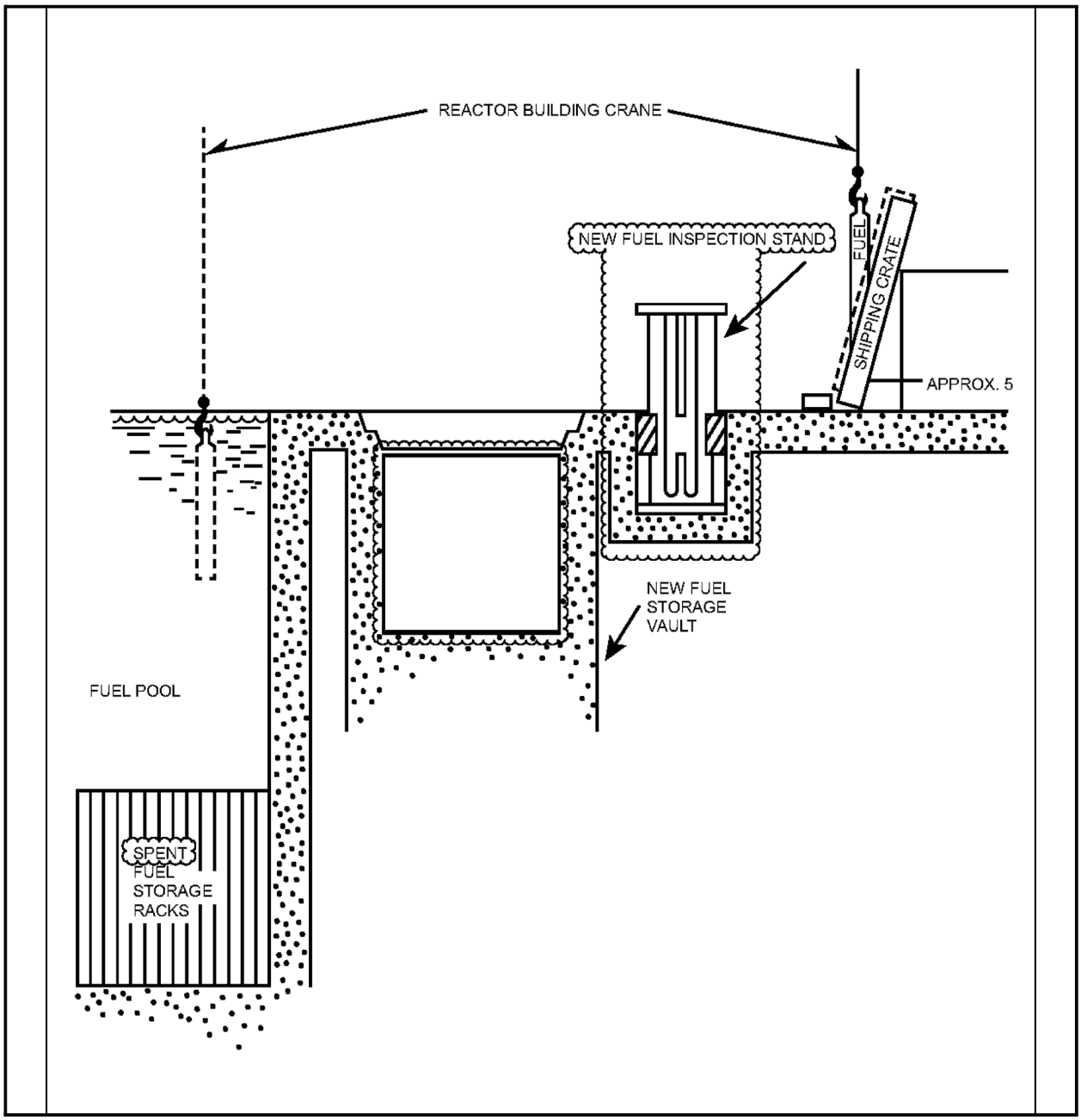

Figure 9.1-14 Simplified Section of New-Fuel Handling Facilities

9.2 Water Systems

The information in this section of the reference ABWR DCD, including all subsections, tables, and figures, is incorporated by reference with the following departures and supplements:

STP DEP 1.1-2

STD DEP 1.8-1

STD DEP T1 2.14-1 (Table 9.2-4b, Table 9.2-4c, Figure 9.2-1, Figure 9.2-5)

STD DEP T1 3.4-1

STD DEP 9.2-1 (Table 9.2-4d)

STP DEP 9.2-2 (Table 9.2-15, Figure 9.2-10)

STP DEP 9.2-3 (Table 9.2-11, Figures 9.2-6a, 9.2-6b and 9.2-6c)

STP DEP 9.2-5 (Table 9.2-13, Figure 9.2-7)

STD DEP 9.2-7 (Table 9.2-6, Table 9.2-7, and Figure 9.2-2)

STP DEP 9.2-8 (Table 9.2-14 and Figure 9.2-9 Sheet 1 of 2)

STD DEP 9.2-9 (Table 9.2-6 and 9.2-7)

STP DEP 9.2-10 (Table 9.2-16, Figure 9.2-8)

STD DEP 9.4-4 (Table 9.2-7)

STD DEP 9.4-7 (Table 9.2-7)

STP DEP 9.4-8 (Table 9.2-7)

STD DEP Admin (Figure 9.2-4)

STD DEP Admin (Table 9.2-11, Figure 9.2-6b)

9.2.4 Potable and Sanitary Water System

9.2.4.2 Portions Outside the Scope of ABWR Standard Plant

The conceptual design information in this subsection of the reference ABWR DCD is replaced with the following site-specific departures and supplements:

9.2.4.2.2 Power Generation Design Bases (Interface Requirements)

STP DEP 9.2-8

(1) *The PSW System is designed to provide to all buildings* at STP 3 & 4 *a minimum of* ~~*45 m³/h*~~ 90 m^3/h *of potable water* intermittently *during peak demands.*

(2) *Potable water* will be supplied directly off of the well water system and *is* ~~*filtered and*~~ chemically *treated to prevent harmful physiological effects on plant personnel.* Radiological monitoring of the well water system will continue to be performed under the site Radiological Environmental Monitoring Program (REMP).

(3) *The PSW System includes a sanitary drainage system* for all four units at the STP site *which is designed to collect liquid wastes and entrained solids discharged by all plumbing fixtures located in areas with no sources of potentially radioactive wastes and conveys them to a sewage treatment facility.*

(4) The PSW System includes a sewage treatment system which treats sanitary waste for all four units at the STP site using the activated sludge biological treatment process. The aeration tanks are capable of receiving waste at a rate ~~*between 45 m³/d and 185*~~ of 1136 m^3/d.

(6) The emergency eyewash and shower stations require the use of tepid water.

(7) The system supply pressure is regulated to ensure that no plumbing fixture or equipment connection is subjected to a pressure greater than 60 psig (43 m) under normal operating conditions.

(8) The Potable Water System is shared between STP 3 & 4; the Sewage Treatment System (STS) is shared between all four units at the STP site.

9.2.4.2.3 System Description

The PSW system includes a potable water system, a sanitary drainage system, and a sewage treatment system. The PSW system is designed and installed in accordance with the International Plumbing Code 2003, and all state and local codes, as applicable.

The portions of the PSW system outside of the ABWR Standard Plant are shown on Figure 9.2-9.

9.2.4.2.3.1 Potable Water System

The potable water system is shared between STP 3 & 4. Raw water is pumped from groundwater wells into the potable water storage tank. A hypochlorite injection pump and tank are provided to inject sodium hypochlorite to the water entering the potable water storage tank. Potable water pumps send water from the potable water storage

tank to a distribution system. A hydropneumatic pressure tank and an air compressor (or air receiver tank) are provided to maintain adequate pressure within the potable water distribution piping system. Potable water used for hot water service is sent to a heater where it is heated and distributed throughout the plant.

9.2.4.2.3.2 Sanitary Drainage System

The sanitary drainage system collects liquid and solid wastes and conveys them to the STS.

9.2.4.2.3.3 Sewage Treatment System

The sewage treatment system (STS) is shared between all four units at the STP site. The STS is a structure containing several compartments that uses the activated sludge biological treatment process. The STS includes a comminutor with a bypass screen channel, aeration tanks, final clarifiers, a chlorine contact tank, aerobic digesters, air blowers, a froth spray pump, a hypochlorite pump, and related equipment. The system can be operated in two modes: extended aeration and contact stabilization.

9.2.4.2.4 System Operation

9.2.4.2.4.1 Normal Operation

The design and construction of the potable water supply includes facilities for metering, storage, pressure maintenance, pumping, and disinfection. The design and construction will meet all state requirements for a designated noncommunity, non-transient potable water supply. The potable water pumps take water from the potable water storage tank and discharge it to the distribution system. Maintenance of working pressure in the system will be provided with a hydropneumatic pressure tank. Under automatic control, a low-pressure switch starts one of the potable water pumps when the hydropneumatic pressure tank water pressure falls below a specified limit. A pressure switch automatically starts a second potable water pump when a single pump is unable to maintain the tank pressure above a specified limit. When the water level reaches a specified high level in the hydropneumatic pressure tank, a level switch automatically stops the potable water pumps. If high water level in the pressure tank is reached and the tank pressure is low, the air compressor is automatically started and is stopped at a specified pressure by a high-pressure switch.

Normally, the STS is operated in the extended aeration mode. The sanitary wastes enter the STS via the comminutor, in which any solids are shredded, and flows into the aeration tanks. In the aeration tanks, the waste liquids are continuously aerated. Foaming occasionally occurs in the aeration tanks. A froth spray system is provided that uses processed sewage to control any froth that is present. The aeration tank contents are then transferred to the clarifiers where the sludge is allowed to settle. The clarified sewage passes into the chlorine contact tank for chlorination before being discharged to the Main Cooling Reservoir (MCR). The settled sludge is sent to the aerobic digesters and disposed of by land application on the STP site in accordance with the permit to land-apply sewage sludge or dewatered and shipped offsite for disposal.

9.2.4.2.4.2 Abnormal Operation

The components of the PSW system are designed to meet the increased needs during refueling operations when additional personnel are onsite.

The STS may be operated in the contact stabilization mode to process the substantially higher wastewater flow rates during outages. In this mode, a portion of the settled sludge from the final clarifiers is aerated, sent to the aeration tanks, and mixed with incoming sewage.

9.2.4.2.5 Evaluation of Potable and Sanitary Water System Performance (Interface Requirements)

The following site-specific supplement addresses the COL License Information Item in this subsection:

The PSW system includes a potable water system, a sanitary drainage system, and a sewage treatment system. The PSW system is designed and installed in accordance with the International Plumbing Code 2003, and all state and local codes, as applicable.

The PSW system will be designed with no interconnections with systems having the potential for containing radioactive materials. Protection will be provided through the use of air gaps, where necessary. A backflow preventer will be provided for both Unit 3 and Unit 4 to prevent cross contamination in the unlikely event that a unit becomes contaminated with radioactive materials. Additionally, a backflow preventer will be provided at the entrance to each building supplied by the Potable Water System to prevent cross-contamination.

9.2.5 Ultimate Heat Sink

The conceptual design information in this subsection of the reference ABWR DCD, including all subsections, tables, and figures, is replaced with the following supplements. In addition, supplemental information is added to address Interface Requirements.

9.2.5.1 Safety Design Bases (Interface Requirements)

(1) The ultimate heat sink (UHS) is designed to provide sufficient cooling water to the Reactor Service Water (RSW) system to permit safe shutdown and cooldown of the unit and maintain the unit in a safe shutdown condition. The RSW water temperature at the inlet to the ~~Reactor Cooling Water (~~RCW~~)~~/RSW heat exchangers is not to exceed 35°C during a ~~loss-of-coolant accident (~~LOCA~~)~~ (GDC 44).

(2) In the event of an accident, the UHS is designed to provide sufficient cooling water to the RSW system to safely dissipate the heat for that accident. The amount of heat to be removed is provided in Tables 9.2-4a, 9.2-4b, and 9.2-4c (GDC 44).

(3) The UHS is sized so that makeup water is not required for at least 30 days following an accident and design basis temperature and chemistry limits for safety-related equipment are not exceeded.

(4) The UHS is designed to perform its safety function during periods of adverse site conditions, resulting in maximum water consumption and minimum cooling capability.

(5) *The UHS is designed to withstand the most severe natural phenomenon or site-related event (e.g., SSE, tornado, hurricane, flood, freezing, spraying pipe whip, jet forces, missiles, fire, failure of non-Seismic Category I equipment, flooding as a result of pipe failures or transportation accident), and reasonably probable combinations of less severe phenomena and/or events, without impairing its safety function* (GDC 2 and 4).

(6) The safety-related portion of the UHS is designed to perform its required cooling function assuming a single active failure in any mechanical or electrical system.

(7) The UHS is designed to withstand any credible single failure of man-made structural features without impairing its safety function.

(8) All safety-related heat rejection systems are redundant so that the essential cooling function can be performed even with the complete loss of one division. Single failures of passive components in electrical systems may lead to the loss of the affected pump, valve, or other components and the partial or complete loss of cooling capability of that division but not of other divisions.

(9) The UHS and any pumps, fans, valves, structures, or other components that remove heat from safety systems are designed to Seismic Category I and ASME Code, Section III, Class 3, Quality Assurance B, Quality Group C, IEEE-379, IEEE-603*, and IEEE-308 requirements.*

(10) The safety-related portions of the UHS shall be mechanically and electrically separated. The UHS is arranged in three divisions. Active components within each division are powered by their respective Class 1E divisions. Each division is physically separated and electrically independent of the other divisions.

(11) The UHS is designed to include the capability for full operational inspection and testing.

(12) In the event of loss of preferred power source, the UHS is designed to be powered by the onsite emergency power system.

(13) UHS System Divisions A and B components have control interfaces with the Remote Shutdown System (RSS) as required to support UHS operation during RSS design basis conditions.

9.2.5.2 Power Generation Design Bases (Interface Requirements)

The UHS is designed to remove the heat load of the RSW system during all phases of normal plant operation. These heat loads are provided in Tables 9.2-4a, 9.2-4b, and 9.2-4c. However, it is not a requirement that the UHS temperature be assumed to be the maximum temperature for all operating modes during normal plant operations.

9.2.5.3 System Description

Each unit has its own UHS water storage basin. Above the basin is a counterflow mechanically induced draft cooling tower with six cooling tower cells, of which two cells are dedicated to each of the three RSW divisions to remove heat from their respective RCW/RSW division. (See Figures 1.2-34 through 1.2-36)

9.2.5.3.1 General Description

The UHS is a highly reliable, Seismic Category I structure that provides an adequate source of cooling water that is available at all times for reactor operation, shutdown cooling, and accident mitigation. The RSW is pumped from the UHS water storage basin to the RCW heat exchangers for removal of heat. The heated water is returned to the mechanical-induced draft cooling tower where the heat is dissipated to the atmosphere by evaporation and conduction (see P&ID Figure 9.2-7, sheets 1 to 3).

The design of the RSW pump house, cooling tower, and UHS basin allows periodic inspections of components (pumps, fans, cooling tower cells, strainers, valves, and piping) to ensure system integrity and capability as required by GDC 45.

The design of the UHS system meets the requirements of GDC 46 by allowing appropriate periodic pressure and functional testing of structural and leak-tight integrity of its components, the operability and the performance of the system active components, and the operability of the system as a whole. It also allows testing, under conditions as close to the design as practical, the performance of the full operational sequence that brings the system into operation for reactor shutdown and for LOCAs, including operation of portions of the protection system and transfer between normal and emergency power sources.

9.2.5.3.2 UHS Water Storage Basin

A UHS water storage basin is dedicated for each unit with no cross ties between units.

The UHS water storage basin is a Seismic Category I concrete structure built partially below grade and sized for a water volume sufficient to meet the cooling requirements for 30 days following a design basis accident (DBA) with no makeup water and without exceeding the design basis temperature and chemistry limits. The UHS basin at the low-low level holds 60,950,049 kilograms of water to meet the unit cooling needs for 30 days following a postulated LOCA with no makeup.

9.2.5.3.3 RSW Pump House

The RSW pump house is contiguous with the UHS water storage basin and houses the RSW pumps and associated piping and valves (Subsection 9.2.15). The RSW pump

house is partially below grade and is integral with the UHS water storage basin structure. Each division's RSW pumps are located in a separate pump room.

The electrical equipment room of each division is located in the RSW pump house above the respective RSW pump room.

HVAC equipment maintains suitable room conditions for proper operation of the RSW pumps and electrical equipment as described below:

- Ventilation of the RSW pump rooms is provided by a dedicated, thermostatically controlled ventilation system that removes the heat generated by the RSW pump motor and other equipment in the RSW pump rooms. The system for each pump room is comprised of one 100% capacity supply fan, ductwork, intake damper, and return air damper. A space thermostat controls the dampers to maintain the room temperature between 18°C and 50°C. The ventilation inlet/exhaust openings in the RSW pump house structure are protected against tornado-generated missiles (see Figures 1.2-35 and 1.2-36).
- The RSW pump rooms are heated by thermostatically controlled electric unit heaters sized to maintain the minimum design winter temperature.
- The air temperature in the electrical equipment rooms associated with the RSW pump house is controlled by the HVAC packaged air conditioning unit in each room. RSW is used to cool the water-cooled condenser of each air conditioning unit (see Subsection 9.2.15). The RSW used for cooling is returned to the UHS basin.

9.2.5.3.4 System Components

The RSW supply and return lines are routed through a divisionally separated tunnel (see Appendix 3H.6).

The cooling tower is contiguous with the UHS structure. Each cooling tower is a counterflow mechanically induced draft cooling tower with six cooling tower cells, of which two cells are dedicated to each of the three RSW divisions. During normal plant operation, all three divisions are in operation with one cooling tower cell per division. When the heat load is increased during cooldown, shutdown, or accident, all cooling tower cells are in operation.

The cooling tower internals are protected from effects of tornado generated missiles (see Appendix 3H.6). The cooling tower riser and distribution system sprays the heated water over the area of the tower fill. The cooling tower spray nozzles are of corrosion-resistant materials and designed to provide the required thermal performance while minimizing drift loss. The system is designed so that the pressure drop across the nozzles for proper spray performance is achieved for all anticipated modes of RSW system operation. The nozzles are designed to be resistant to clogging.

Mechanical-induced draft fans provide airflow to cool the water droplets as they fall through the tower fill, rejecting heat from the reactor service water to the air. The

induced draft fans draw air through the openings on the north and south sides of the cell and the heated air exits from the top of cooling tower cell. Drift eliminators are located between the water distribution system and the fan. Each cooling tower cell is sized for an RSW flow rate of 3240 m^3/h. The cooling tower cells are supported by beams spanning along the east-west axis and columns from the UHS water storage basin floor.

Cold weather bypass lines are provided for each RSW return line to allow bypassing the cooling tower dedicated cells when the outside temperature is low and cooling tower operation is not required. The heated water from the RSW return line is discharged directly into the UHS water storage basin above the water surface.

The STP well water is the primary source of the makeup water to the UHS water storage basin. A makeup water valve controlled by level instrumentation in the UHS water storage basin is provided to maintain proper water level. The makeup water valve can also be operated remotely to maintain the desired water level or quality. The MCR is the backup source of makeup for the UHS basin.

Blowdown from the UHS water storage basin is used to remove excess water from precipitation and maintain water storage basin water quality. Blowdown is taken from each RSW pump discharge line (see Subsection 9.2.15 and P&ID Figure 9.2-7).

9.2.5.4 System Operation

9.2.5.4.1 Normal Operation

Normally, the RSW system has one pump per division in operation. Return water from each RSW division is sent to the UHS basin where it is routed to the respective RSW division cooling tower cell. The operators may alternate the operating RSW pump and the UHS cooling tower cell when desired. During normal shutdown and emergency cooling modes, the second RSW pump and the second cooling tower cell in each division are placed into service. Each RSW pump is provided with a self-cleaning strainer. The self-cleaning strainer operation is controlled by the pressure drop across the strainer inlet/discharge. The strainer discharge line is connected to the blowdown line when makeup water is available or to the UHS basin when no makeup water is available.

The UHS design is based on three cycles of concentration of the water composition in the UHS basin during normal operation. The primary source of makeup water is well water. Chemicals are added to control corrosion, scaling, and biological growth in the UHS. Sulfuric acid will be added for scale control as well as other chemicals such as a corrosion inhibitor, scale inhibitor, and dispersant. A hypochlorite or alternative biocides feed system is provided to inhibit biological growth in the UHS water storage basin. The chemicals are added to the UHS water storage basin as needed based on sampling and analysis.

Operation of the UHS water storage basin without blowdown would increase the concentration of scale-forming constituents in the water because of evaporation. Also, biofouling may occur under some conditions. However, sufficient water inventory is

provided in the UHS water storage basin to prevent scale-producing agents, such as calcium sulfate, from reaching elevated concentrations that could cause significant scaling during the 30-day post-accident period when makeup and blowdown are assumed to be unavailable.

9.2.5.4.2 Cold Weather Operation

The cooling tower is designed to perform its cooling function during cold weather operation using the cooling tower bypass. Ice formation in the basin is not expected to occur because the system is in service during all operating modes and the climate of the site is temperate. During cold weather conditions, the RSW system return flow to the cooling tower is isolated and the lines downstream of the isolation valves are drained. The cold weather bypass lines direct the warm water to the basin and discharge above the water surface to circulate and mix with the water in the basin. Any ice layer present on the basin surface will melt.

9.2.5.5 UHS Thermal Performance

9.2.5.5.1 Design Meteorology

Conservative site-specific design meteorological data was developed in accordance with the requirements of US NRC RG 1.27. The meteorological database used to determine the worst 1-day and 30-day meteorological data for STP 3 & 4 UHS analysis was 45 years of hourly surface weather data from Victoria, Texas, obtained from National Climatic Data Center (1961 to 1990 in SAMSON format and 1991 to 2005 in TD-3280 format). A 45-year record from Victoria, Texas meteorological data is representative of the site for the UHS analysis. For comparison to the use of the Victoria data, 18 years of recent meteorological data for (1988 to 2005) Palacios, Texas, obtained from the National Climactic Data Center was evaluated. Results using this limited number of years of Palacios data demonstrated that water usage is bounded by the analysis results using the Victoria data and the UHS maximum water temperature, although slightly higher than with the Victoria data, would remain below the design limit cold water temperature of 35 °C (95 °F).

9.2.5.5.1.1 Conditions That Maximize Water Temperature

The cooling tower is capable of dissipating the design basis heat loads under environmental conditions that minimize heat dissipation without exceeding the design limit cold water supply temperature of 35°C (95°F). The worst 1-day (24-hour) meteorological conditions for UHS basin water maximum temperature are found by using the meteorological data conversion and extraction program to screen the aforementioned meteorological database. The UHS basin water maximum temperature results from the 1-day (24-hour) meteorological data between September 16, 1996 and September 17, 1996 (see Table 9.2.-23a). The maximum expected temperature is 33.1°C in accordance with Table 9.2-24.

9.2.5.5.1.2 Conditions That Maximize Water Usage

To determine the required size of the cooling tower storage basin, water use must be determined for a 30-day period following a normal or LOCA shutdown, assuming all sources of makeup water are lost.

The worst 30-day meteorological conditions for maximum water usage are found by using the meteorological data conversion and extraction program to screen the aforementioned meteorological database. The maximum water usage results from the 30-day (720 hours) meteorological data between July 09, 1982 and August 07, 1982 (see Table 9.2-23b).

9.2.5.5.2 UHS Water Storage Basin Requirements

The size of the UHS basin is based on the 30-day cumulative evaporation for the worst-case meteorological conditions using the reactor decay heat and other essential loads related to the RCW/RSW systems as shown in Tables 9.2-4a, 9.2-4b, and 9.2-4c.

The UHS water storage basin design volume is based on UHS thermal performance analysis taking into account the following data:

(1) Evaporation Due to Plant Heat Load

The STP 3 & 4 UHS basin water evaporation is determined conservatively based on the plant heat loads for a 30-day DBA. Two UHS cases with different division alignments (and hence different plant heat loads as identified in Table 9.2.-19) are considered:

– Case D1: 30-day basin inventory case (Figure 9.2-11 and 9.2-16):

- Day 1-2: 3 RCW/RSW divisions, 2 RSW, 2 RCW pumps and 2 CT cells per division
- Day 3-30: Divisions A and B, 1 RSW, 1 RCW pump and 1 CT cell per division

– Case D2: 30-day basin inventory case (Figure 9.2-12 and 9.2-17):

- Day 1-2: 3 RCW/RSW divisions, 2 RSW, 2 RCW pumps and 2 CT cells per division
- Day 3-30: Divisions A and B, 2 RSW, 2 RCW pumps and 2 CT cells per division

The STP 3 & 4 UHS basin water evaporations for cases D1 and D2 are plotted in Figures 9.2-13 and 9.2-14. The total amount of water evaporated over 30 days are 5.12×10^7 kilograms (Table 9.2-25) and 5.56×10^7 kilograms (Table 9.2-26), respectively.

(2) Natural Evaporation

Bechtel Standard Computer Program GFULMIX (MAP152) is used to provide estimates of cooling pond evaporation and temperature response to imposed heat loads. Meteorology and heat load data is input at specified time points and the pond temperature, evaporation, and volume are output at specified time increments. The Victoria, Texas 30-day meteorological data from July 9, 1982 to August 7, 1982 (in SAMSON format) produces the worst 30-day period for cooling tower water evaporation. The initial UHS basin water temperature is assumed at 32.2°C.

For an average daily wind speed of 4.47 m/s, the natural evaporation losses for the 30-day period are about 8.62×10^5 kilograms per unit.

(3) Drift Losses

The drift rate for the drift eliminator (based on an assumed 2-inches center-to-center Belgian wave form) is a function of the RSW flow rate to the cooling tower. In accordance with representative cooling tower vendor data, the drift rate is 0.005% of RSW flow rate to the cooling tower. During the 30-day operation following DBA, the water loss due to the drift represents 521,412 kilograms.

(4) Seepage

The seepage loss during the 30-day operation following DBA is 982,330 kilograms. The seepage rate through concrete structures is addressed in ACI 350R-89, Section 4.7.The seepage loss is within the acceptance criteria for the hydrostatic leak-tightness testing to be performed prior to backfilling (seepage loss of 0.1% per day based on the amount of water in the basin).

(5) Sedimentation

The bottom of the UHS water storage basin is provided with a 0.6 meter-tall curb to prevent sediment migration to the RSW pump. During normal operation, the water in the UHS basin will be maintained at three cycles of concentrations. At this number of cycles of concentration and considering the chemistry of the primary source of water (well water) with a low content of total suspended solids, precipitation of salts is not expected. During normal operation, the source of sediment is makeup water and dust from the atmosphere. Since the sediments could have an impact on the UHS water inventory, the UHS basin compartments are to be periodically inspected and cleaned as necessary. The backup source of makeup water (MCR) has a higher total suspended solid content but is not expected to be used on regular basis.

During the 30-day operation with no makeup following a DBA, no additional suspended solids will be added due to makeup water. By increasing the

number of cycles of concentration, precipitation of salts occurs, but this does not affect the water inventory during a DBA.

(6) Water Quality

The same sources of makeup water that are used for the STP 1 & 2 Essential Cooling Pond are used for the STP 3 & 4 UHS. The primary source of makeup water to the UHS water storage basin is underground/well water, with the MCR as the backup source.

(7) Minimum Water Level for Operation

A perforated plate will be installed above the suction line intakes to prevent large debris from entering the system and preclude vortex formation during operation. The minimum water level in the UHS basin after 30-day operation following a DBA is set at 2.74 meters above the pump suction line's centerline at the interface with the UHS basin.

(8) Pipe Crack

A single passive failure of the RSW piping is considered in the system. A crack is assumed with the leakage flow based on a circular orifice with flow area equal to one-half of the pipe outside diameter multiplied by one-half of the nominal wall thickness. The water loss is based on a 30 minute response time.

9.2.5.6 Evaluation of UHS Performance (Interface Requirements)

A system to transfer heat from structures, systems, and components important to safety to a UHS is provided. The system safety function is to transfer the combined heat load of these structures, systems, and components under normal operating and accident conditions.

Suitable redundancy in components and features, and suitable interconnections, leak detection, and isolation capabilities are provided to ensure that, for onsite electric power system operation (assuming offsite power is not available) and for offsite electric power system operation (assuming onsite power is not available), the system safety function can be accomplished, assuming a single failure.

The UHS cooling tower's thermal performance analysis has been performed to ensure that UHS system storage and cooling capacities are adequate for 30 days of cooling following a postulated LOCA without makeup or blowdown and that the cooling water temperature does not exceed the design limit for design basis heat input and site conditions.

The cooling tower cells are designed to remove the heat loads identified in Tables 9.2-4a, 9.2-4b, and 9.2-4c. During normal operation, only one cell is required to be in operation in each division at a flow rate of 3,240 m^3/h. During all the other modes of operation, initially two cells are required to be in service at flow rates of 4,860 m^3/h (2430 m^3/h per cell). The maximum airflow rate of each cooling tower fan is 1,587,839

m^3/h. Design temperature for cold water leaving the cooling tower is 35°C (the maximum acceptable water temperature at the RCW heat exchanger inlet). A cooling tower range (the difference between hot water inlet temperature and cold water outlet temperature) of 8°C has been selected for cooling tower design. This range bounds the required cooling tower range, considering the largest RCW heat exchanger heat loads to be dissipated by the cooling towers. This corresponds to a maximum water temperature at the cooling tower inlet of 43°C.

The UHS cooling tower thermal performance analysis has determined the 30-day cumulative evaporation with the worst-case meteorological conditions for 30 consecutive days using the RCW/RSW loads as shown in Table 9.2-19 and Figures 9.2-11 and 9.2-12.

During normal operation, the anticipated maximum water temperature in the UHS water storage basin is 32.2°C.

The UHS estimated maximum water losses during the 30-day operation post-LOCA are for Case D2:

	Loss for first 24 hours (kg)	Total Loss for 30 days (kg)
Forced Evaporation	3,720,000	55,600,000
Natural Evaporation	28,735	862,000
Drift	17,380	521,412
Seepage	32,745	982,330
Pipe Crack	86,438	86,438
Total	3,885,298	58,052,180

9.2.5.7 Safety Evaluation (Interface Requirements)

9.2.5.7.1 Thermal Performance

The UHS is designed to reject the heat from the RCW/RSW systems without exceeding the maximum acceptable cold water temperature of 35°C during:

- Normal operation
- Emergency shutdown
- Normal shutdown
- Testing
- Standby
- Loss of preferred power

The heat loads that will be rejected by UHS are provided in Tables 9.2-4a, 9.2-4b, and 9.2-4c. Two out of the three mechanically and electrically separated divisions meet the plant safe shutdown requirements.

The analysis assumed that the UHS basin estimated water temperature at the beginning of LOCA is 32.2°C and the water inventory in the UHS water storage basin is 60,950,049 kilograms corresponding to the low-low level (elevation 23.55 meters MSL, corresponding to a basin water level of 19.28 meters above the basin floor). At the end of the 30-day operation following a LOCA, if no makeup is available, the level in the UHS water storage basin will be at elevation 5.18 meters MSL and the total water inventory will decrease to 2,897,869 kilograms.

Cold water temperatures (Figure 9.2-15, 9.2-16, and 9.2-17) are determined using vendor-provided cooling tower performance curves that relate cold water temperature and wet-bulb temperature to the cooling tower range and cooling tower flow rate. The calculated cold water supply temperature after 30 days of operation following a DBA is 30.1°C for Case D1 and 28.6°C for Case D2.

9.2.5.7.2 Effects of Severe Natural Events or Site-Related Events

The SSE is the controlling seismic event. The UHS basin, including the RSW pump house, are partially below grade, Seismic Category I structures that can withstand the most severe natural phenomena expected, other site-related events, and reasonable combinations of less severe natural phenomena and/or site-related events.

The cooling tower protected structure is designed to withstand the SSE. The fill, drift eliminators, fans, and piping are seismically analyzed. The seismic analysis of structures is discussed in Appendix 3.H6.

Therefore, during an earthquake event, the UHS system is capable of fulfilling its safety function of safe shutdown and cooldown of the unit.

The cooling tower structure is designed to withstand design basis tornado and tornado effects, the controlling events for wind loading differential pressure, and wind-generated missiles. The components of the UHS system (basin, cooling tower, RSW pump house, and its ventilation inlets/outlets), are designed to withstand the effects of tornado winds' differential pressure and tornado-generated missiles without failure or loss of safety-related functions (Appendix 3H.6).

The MCR embankment breach is a potential single failure of a man-made structural feature. The UHS structure is designed to withstand the dynamic and hydrostatic forces caused by the flood wave propagating from the MCR for the duration of the postulated accident. The evaluation of this event for STP 3 & 4 is made in Section 2.4.

The UHS structures and the associated equipment are capable of withstanding the effects of a site flood and fulfilling their safety function (Section 3.4).

The UHS is sized to remain operational during a drought event under both emergency and normal plant operation. The primary source of makeup water to the UHS basin is

well water and the backup source is the MCR. In the event the MCR level reaches minimum level, the units will be shut down since the condenser heat sink is not available. The volume of water in the UHS water storage basin and MCR is sufficient to allow shutdown and cooldown of the units and maintain them in safe shutdown condition.

The UHS is capable of withstanding the effects of a fire since:

- The UHS and RSW pump house are concrete structures provided with divisional separation and three-hour fire barriers.
- The cooling tower is a concrete structure with no combustible materials, except possibly for fan blades.

An explosion of a chemical truck located on nearby FM 521 and a gas well explosion have been considered as site-related events. The UHS structure is located well beyond the safe distance noted in Table 2.2S-q from FM 521. This Seismic Category I concrete structure is designed to more severe conditions. This event is evaluated for STP 3 & 4 in FSAR Section 2.2.

9.2.5.7.3 Freezing Considerations

The UHS is designed for operations under any freezing conditions that may occur.

Valves and other components essential to operation of the UHS system are located inside the RSW pump house. These structures prevent rainwater or snow from impinging on the components of the system, thereby protecting them from freezing or icing. The UHS basin is partially below grade, such that ground temperature maintains the water temperature above freezing and the RSW pump suction is placed 2.74 meters below the minimum water level in the UHS basin at the end of 30-day operation following a DBA. The UHS is designed with a provision to bypass the cooling tower during cold weather operation (see Subsection 9.2.5.4.2). Ice formation in the UHS water storage basin is not expected to occur since the system is in service during all operating modes of the reactor (normal, hot standby, normal shutdown, startup, loss of preferred power, and emergency shutdown) and the climate in the vicinity of the site is temperate (Section 2.3).

9.2.5.8 Conformance to RG 1.27 and 1.72 (Interface Requirements)

The UHS meets all applicable requirements of RG 1.27 since:

(1) The UHS is capable of providing sufficient cooling for at least 30 days

– To allow the simultaneous shutdown and cooldown of STP 3 & 4 and to maintain them in safe shutdown condition.

– In the event of an accident in one unit, the UHS is capable of safely shutting down the unit and limiting the effects of the accident. Each unit has a dedicated six-cell cooling tower and its own UHS water storage basin.

– Sufficient conservatism has been applied to ensure that a 30-day cooling period is available and the design basis temperatures of safety-related equipment are not exceeded.

– During the 30 days of operation following the DBA, actions will be taken to ensure the availability of makeup sources (onsite freshwater well system, MCR, or other) to extend the UHS operation as needed.

(2) The UHS is capable of withstanding, without loss of its safety-function, the following events:

– The most severe single natural phenomena expected at the site with appropriate ambient conditions.

– The site-related events.

– Reasonable probable combinations of less severe natural phenomena and/or site–related events.

– A single failure of manmade structural features.

(3) The two out of three divisions of the ultimate heat sink are capable of performing the safety functions specified in regulatory position (1).

(4) The Technical Specifications will include limiting conditions for operation in the event that conditions threaten partial loss of the capability of the UHS or the unit temporarily does not satisfy Regulatory Positions (1) and (3) during operation.

The reactor service water system safety-related piping will utilize stainless steel material hence provisions of RG 1.72 are not applicable.

9.2.5.9 Instrumentation and Alarms (Interface Requirements)

UHS low water level (if applicable) and high water temperature are provided and alarmed in the control room. UHS surface water temperature indication is provided (if it can differ appreciably from the bulk temperature) in the control room.

UHS makeup and blowdown volumes (if applicable) are indicated by flow totalizers located in the makeup and blowdown lines.

Any components required for UHS system operation in Divisions A and B shall be operated from the Remote Shutdown System.

UHS basin water low-level and high-water temperature are provided and alarmed in the control room. Low level initiates the start of makeup water. The UHS surface water level and temperature indications are provided in the control room. When the water level in the UHS falls to a low-low level, the unit shutdown is initiated.

UHS makeup and blowdown flow rates are indicated as well as the totalized volumes.

Any components required for UHS operation in Divisions A and B are capable to be operated from the RSS.

9.2.5.10 Tests and Inspections (Interface Requirements)

A preoperational test program and tests of the UHS have been established as described in Chapter 14, Subsection 14.2.12.1.77. In addition, performance of the site-specific ITAAC provided in COLA Part 9, Section 9.3 demonstrates that the interface requirements provided in Tier 1, Section 4.5/2.11.9 of the reference ABWR DCD for the UHS System are met.

9.2.8 Makeup Water (MWP) Preparation System

The conceptual design information in this subsection of the reference ABWR DCD is replaced with the following site-specific departures and supplements:

9.2.8.2 Power Generation Design Bases (Interface Requirement)

STP DEP 1.1-2

STP DEP 9.2-2

The minimum rating of the MWP equipment satisfies the normal water use for STP 3 & 4. Additionally, each demineralizer storage tank and its associated transfer pumps are sized to store and transfer demineralized water at 135 m^3/h. This meets the instantaneous demineralized water demand for short periods of time.

The fire-protection system does not rely on the stored (or makeup) filtered water capacity of the MWP for any single credible fire, i.e., the water supply to the fire-protection system storage tanks is manually controlled when MWP demand is otherwise low. As indicated in Figure 9.2-10, fire protection system water normally will be supplied from the filtered water storage tank (i.e., will be filtered). However, in the unlikely event the normal supply is unavailable or not capable of meeting flow rate demands, an alternate flow path will be available to supply unfiltered groundwater to the fire protection water storage tanks directly from the main well water header.

(1) *The MWP System consists of* reverse osmosis (RO) modules arranged in *two divisions capable of producing* ~~*at least 45 m^3/h*~~ 90 m^3/h each (In two-pass series configuration, the divisions are rated at 45 m^3/h each to satisfy the demands for each unit); one RO permeate tank and two divisions of demineralizers capable of producing 90 m^3/h *of demineralized water each.*

(2) *Storage of demineralized water shall be at least* ~~*760*~~ 5320 m^3.

(4) *Demineralized water shall be provided by* demineralized water forwarding pumps and associated piping *at a minimum flow rate of approximately 135 m^3/h* per unit *at a temperature between 10° to 38°C* for short durations.

(6) *The MWP System provides* instantaneous flows up to ~~*45*~~ 90 m^3/h *of* well ~~*filtered*~~ *water* for short durations *to meet maximum anticipated peak demand periods for the PSW System*.

(8) The MWP well water subsystem is capable of supplying makeup water to the UHS basin on an as-needed basis.

(9) STP 3 & 4 is a dual-unit station. A common MWP System, utilizing a common raw water storage tank and a common demineralized water storage tank, will be utilized to supply water to each respective Makeup Water Condensate System and the Makeup Water Purified System for STP 3 & 4. The MWP System is not safety related and does not have an assigned safety function.

(10) Each RO division can be operated in a two-pass series configuration for normal demands or in a single pass, parallel configuration to provide sufficient demineralized water during peak demands.

(11) In the event the well water system cannot supply sufficient quantities of makeup water, the MCR will be used as a backup source to the UHS basin.

(12) The MWP pretreatment subsystem is capable of supplying makeup water to the fire-protection system on an as needed basis.

9.2.8.3 System Description

The MWP System consists of both mobile and permanently installed water treatment systems.

The permanently installed system consists of wells, filters, RO modules, and demineralizers that prepare demineralized water from well water. The demineralized water is sent to storage tanks until it is needed. The components of the MWP system are shared components with the exception of the demineralizer water storage tanks, which are cross-connected to provide demineralized water to STP 3 & 4. The components of the MWP system are listed in Table 9.2-15 and the system block flow diagram is in Figure 9.2-10.

Two demineralized water trains are provided. Each train is comprised of a 2-pass RO system and mixed bed demineralizers.

In the normal mode, the RO units will be configured as two parallel RO trains, with each RO train consisting of two RO units in series (as a two-pass RO configuration) to produce 90 m^3/h total demineralized water. During normal operation, STP 3 & 4 requires approximately 45 m^3/h. Therefore, only one RO train needs to be in operation to support both units.

In order to meet peak instantaneous flows, the system can be configured such that the RO units will operate as four parallel single-pass RO trains capable of producing up to 180 m^3/h of demineralized water. However, the MWP system has an estimated total continuous maximum demineralized water demand of approximately 115 m^3/h. This is based on one unit in maximum peak demand (90 m^3/h) and the other unit in normal operation (23 m^3/h).

The mobile equipment will consist of similar processes as the permanent demineralizer system. Connections will be provided to interface with the mobile equipment.

The MWP system is designed to produce sufficient quantities of demineralized water. The system is operated as necessary to meet the demineralized water requirements for STP 3 & 4.

9.2.8.3.1 Well Water System

A series of onsite wells including pumps, a well water storage tank/basin, and two well water forwarding pumps are provided that can produce sufficient water to meet the concurrent needs of the MWP system and the PSW system.

In addition to the water provided to the well water storage tank and the PSW system, water is also supplied to the UHS basin for makeup water on an as-needed basis. In the event the well water system cannot supply sufficient quantities of makeup water, the MCR will be used as a backup source to the UHS basin.

9.2.8.3.2 Pretreatment System

Four 33 1/3%-capacity dual media filters with one in standby are provided in parallel that are backwashed when needed using one of two backwash pumps and water from a filtered water storage tank. Water may be sent from the filtered water storage tank to the fire-protection system or to the next components of the MWP system.

9.2.8.3.3 Reverse Osmosis Modules

Two high-pressure, horizontal multistage RO feed pumps per train provide a feed pressure of approximately 3.14 MPaG. RO membranes are arranged in two parallel divisions (trains) of two passes each with the permeate of the first passes going to the inlet of the second passes. The reject or brine from the first passes is sent to the wastewater retention basin. A chemical addition tank, two pumps, and controls are provided to add sodium hydroxide to the permeate of the first pass. The reject from the second passes is recycled to the RO feed pump suction line. The permeate from the second pass is sent to a RO permeate storage tank.

In addition to the description above, each RO division can be operated in a single-pass parallel configuration to provide sufficient demineralized water during peak demands.

9.2.8.3.4 Demineralizer System

The demineralizer system consists of two trains, each rated for 100% of the service flow. One demineralizer train is in operation at a time, while the other train is on standby. Two demineralizer feed pumps are provided in each train. Three mixed bed demineralizers are provided in parallel in each train with two normally in operation with the third in standby. The demineralized water is monitored and sent to the demineralized water prover tanks to monitor the water quality before transferring into the demineralized water storage tanks.

The demineralizer feed pumps can also be aligned manually to draw water from the demineralized water prover tanks. This allows recirculation and cleanup of the tank contents in the event of deteriorated water quality conditions.

9.2.8.3.5 Demineralized Water Storage System

Two demineralized water storage tanks are provided for STP 3 & 4. Two demineralized water prover tanks serve as holding tanks for demineralized water until it is verified that the water quality is sufficient. The water is then forwarded to the demineralized water storage tanks for distribution to STP 3 & 4. Three demineralized water forwarding pumps per unit are provided to send the demineralized water to the makeup water purified system.

9.2.8.3.6 Makeup Water Preparation Building

A building is provided for all of the subsystems listed above except for the well water storage tank/basin, filtered water storage tank, demineralized water prover tanks, and the demineralized water storage tanks, which are located outdoors. The building is provided with a heating system capable of maintaining a temperature of at least 10°C at all times.

The building does not contain any safety-related structures, systems, or components. The MWP system will be designed so that any failure in the system, including any that cause flooding, will not result in the failure of any safety-related structure, system, or component.

The building has a large open area about 7.6 meters by 12 meters with truck access doors and services for mobile water processing systems. These services include electric power, service air, connections to the water storage tanks, and a waste connection. This area will be used for mobile water treatment systems or storage.

9.2.8.4 System Operation

9.2.8.4.1 Normal Operation

During normal operation, the well pumps are controlled by water level controllers to keep the well water storage tank and UHS basin full. The well water forwarding pumps are controlled by a water level controller to keep the filtered water storage tank full. Normally, three filters will be operating with the other filter in standby. The fourth filter is started from the Control Building or is automatically started by a low water level in the filtered water storage tank. When any filter develops a high-pressure drop, it is isolated and any standby filter is put into operation. One of the two backwash pumps is operated to backwash the filter. The backwash is sent to the wastewater retention basin and is eventually discharged to the main cooling reservoir.

A water softener system or a combination of sulfuric acid and sodium hexametaphosphate is added to control calcium sulfate or other fouling and scaling in the RO membranes.

The RO feed pumps are controlled by a water level controller that keeps the RO permeate storage tank full. These pumps feed the water through both RO passes. The RO membranes are of the thin film composite type. The first pass permeate, which becomes feed for the second pass, has a pressure of about 1.37 to 1.77 kPaG. Sodium hydroxide is added to the first-pass permeate to adjust the pH to improve

dissolved solids rejection in the second pass. During periods of peak demineralized water demand, the RO train can be placed in a single-pass parallel configuration. With this configuration, the first and second pass membranes provided will allow one train of demineralized water to supply STP 3 & 4 with the required peak demand.

The demineralizer feed pumps are controlled by a water level controller in the demineralized water storage tanks. Each demineralizer contains 2.2 m^3 of ion exchange resin. When the effluent quality of a demineralizer becomes unsatisfactory, it is automatically removed from operation and the standby demineralizer is automatically put into operation. The exhausted resins are regenerated offsite.

The demineralized water-forwarding pumps are controlled by a pressure switch in their discharge piping. Normally, one pump is operated to maintain a specified system pressure. When the pressure drops below a specified pressure, the second pump is automatically put into operation until system pressure returns to the normal range. If this does not occur, the third pump is automatically put into operation.

The water quality is analyzed periodically to ensure the MWP system is meeting the required chemistry stated in Table 9.2-2a.

9.2.8.4.2 Abnormal Operation

During the early construction period and at certain times later, the MWP system may either not be installed or may not be in operation. Also, there may be times when demineralized water requirements exceed the production capacity. During these periods, mobile water treatment systems will be used. They will be transported to the site by truck and will enter the MWP Building through large doors. When no longer required, they will be removed.

9.2.8.5 Evaluation of Makeup Water System Preparation Performance (Interface Requirements)

The following site-specific supplement addresses the COL License Information Item in this subsection:

The specified water treatment design was found to be acceptable and meets the design basis requirements and water quality requirements in Table 9.2-2a.

The raw water availability and the makeup water amounts were also analyzed for the STP 3 & 4 site. The groundwater availability was found to be acceptable and meets the design basis requirements for the MWP system.

9.2.8.8 Tests and Inspections (Interface Requirements)

The following site-specific supplement addresses the COL License Information Item in this subsection:

A preoperational test program and tests of the MWP system have been established as described in Chapter 14, Subsection 14.2S.12.1.79. In addition, performance of the site-specific ITAAC provided in COLA Part 9, Section 9.3 demonstrate that the

interface requirements provided in Tier 1, Section 4.3 of the reference ABWR DCD for the MWP System are met.

9.2.10 Makeup Water Purified System

STD DEP T1 2.14-1

9.2.11 Reactor Building Cooling Water System

9.2.11.1.1 Safety Design Bases

STD DEP 1.8-1

(3) The safety-related portions and valves isolating the non-safety-related portions of the RCW System shall be designed to Seismic Category I and the ASME Code, Section III, Class 3, Quality Assurance B, Quality Group C, IEEE-603 and IEEE-308 requirements.

9.2.11.2 ~~9.2.11.1~~System Description

STD DEP 9.2-1

The reactor decay heat at four hours after shutdown is approximately 133.1 GJ/h. Each division of the RCW System has the design heat removal capability of ~~107.6~~ 108.02 GJ/h from the RHR System in addition to other cooling loads. If three divisions of RHR/RCW/RSW are used for heat removal, each division must remove one third of the decay heat, or 44.4 GJ/h. This means that each division will remove ~~107.6~~ 108.02 minus 44.4, or ~~63.2~~ 63.62 GJ/h of sensible heat, primarily by cooling the reactor water. If only two divisions of RHR/RCW/RSW are used for heat removal, each division must remove one half of the decay heat, or 66.6 GJ/h. This means the sensible heat removal will be ~~107.6~~ 108.02 minus 66.6 or ~~41.0~~ 41.42 GJ/h of sensible heat primarily from the reactor water. Of course the decay heat will decrease with time.

STD DEP T1 2.14-1

9.2.11.3.2 Safety Evaluation of Equipment

STD DEP 1.8-1

The safety-related parts of the RCW System are designed to Seismic Category I and ASME Code, Section III, Class 3, Quality Assurance B and Quality Group C requirements. The design also meets IEEE-603 and IEEE-308 requirements.

STD DEP 9.2-1

All heat exchangers and pumps ~~will be required~~ are normally placed in operation during the following plant operating conditions, in addition to LOCA: shutdown at 4 hours, shutdown at 20 hours and hot standby with loss of AC power.

9.2.12 HVAC Normal Cooling Water System

9.2.12.1 Design Bases

9.2.12.1.1 Power Generation Design Bases

STD DEP 9.2-9

*The non-safety-related HVAC Normal Cooling Water (HNCW) System shall provide chilled water to the cooling coils of the drywell coolers, of each building supply unit and of local air conditioners to maintain design thermal environments during normal and upset conditions. The supply temperature is 7°C. The return temperature is ~~12°C~~*14.7°C.

9.2.14 Turbine Building Cooling Water System

9.2.14.2.1 General Description

STP DEP 9.2-3

The TCW System is a single-loop system and consists of one surge tank, one chemical addition tank, three pumps with a capacity of ~~3405~~ 4550 *m^3/h each, three heat exchangers with heat removal capacity of ~~68.7~~* 114.5 *GJ/h each (connected in parallel), and associated coolers, piping, valves, controls, and instrumentation. Heat is removed from the TCW System and transferred to the non-safety-related Turbine Service Water (TSW) System (Subsection 9.2.16).*

A TCW System sample is periodically taken for analysis to assure that the water quality meets the chemical specifications.

9.2.14.2.3 System Operation

STP DEP 9.2-3

The cooling water flow rate to the electro-hydraulic control (EHC) coolers, the turbine lube oil coolers and ~~aftercoolers, and generator exciter air cooler~~ the generator H2 cooler *is regulated by control valves. Control valves in the cooling water* inlet or *outlet ~~from~~* of *these units are throttled in response to temperature signals from the fluid being cooled.*

The flow rate of cooling water to all of the other coolers is manually regulated by individual throttling valves located on the cooling water inlet or *outlet ~~from~~*of *each unit.*

9.2.15 Reactor Service Water System

9.2.15.1 Portions Within Scope of ABWR Standard Plant

9.2.15.1.1 Safety Design Bases

STD DEP 1.8-1

(2) The RSW System shall be designed to Seismic Category I and ASME Code, Section III, Class 3, Quality Assurance B, Quality Group C, IEEE-603 and IEEE-308 requirements.

9.2.15.1.5 Instrumentation and Alarms

STD DEP T1 3.4-1

STD DEP Admin

Each RCW equipment divisional area will be provided with water level detection instrumentation. The instrumentation will be composed of two sets of water level detection devices. A set of four water detection devices will provide alarms locally and in the MCR. This set will detect initial abnormal water level. The second set of four diverse ~~seafety~~safety-related water level devices will provide alarm, valve closure and pump trip actions. For further discussion see Subsection 3.4.1. The devices are shown in Figure 11.2-2a (Sheet 36). The four sensors in each set will be arranged in a 2/4 logic to provide redundant trip actuation signals. The instrumentation will utilize ~~MUX devices and network interconnections~~the ECF.

9.2.15.2 Portions Outside the Scope of ABWR Standard Plant

The conceptual design information in this subsection of reference ABWR DCD is replaced with the following supplements:

9.2.15.2.1 Safety Design Bases (Interface Requirements)

The following site-specific supplement addresses COL License information Items 1 through 6 in this subsection. Additional interface requirements from DCD Tier 1, Subsection 2.11.9 (Items (2), (4), (5), and (7)) are included under Item 7:

(1) The design characteristics for the Reactor Building Cooling Water System Heat Exchangers (RCW Heat Exchangers) are provided in Tables 9.2-4d and 9.2-17. The pressure drop across the heat exchangers will be provided following procurement, but before installation of equipment, in Table 9.2-17 (COM 9.2-1).

(2) The available NPSH referenced to the pump centerline is approximately 16 meters considering all losses, including entrance losses. The RSW pump purchase documents will specify that the NPSH required at the pump centerline shall be less than the NPSH available for all operating modes of the RSW pump. The required NPSH for the RSW pumps at pump suction locations considering anticipated low water levels will be provided following procurement, but before installation of equipment, in Table 9.2-17. (COM 9.2-1) The design data for the RSW pumps is provided in Table 9.2-13.

(3) The STP 3 & 4 RSW pump houses are contiguous with the UHS basins that are located directly south of the Reactor buildings.

(4) The RSW system consists of three divisions that are mechanically and electrically separated from each other. Structures housing RSW system components are Seismic Category I and are provided with interdivisional boundaries (including walls, floors, doors, and penetrations) that have a three-hour fire-rating. Each division is protected from flooding, spraying, steam impingement, pipe whip, jet forces, missiles, fire from the other divisions, and the effect of failure of any non-Seismic Category I equipment. Interdivisional flood control features preclude flooding from occurring in more than one division.

(5) The flood level in the Control Building will not exceed 5.0 meters in the event of an RSW line break and failure of an active component in any RCW heat exchanger room (see Subsection 9.2.15.2.4).

(6) System low-point drains and high-point vents are provided as required. All divisions are maintained full of water when not in service (to prevent water hammer) except when undergoing maintenance.

(7) The following interface requirements from DCD Tier 1 Section 2.11.9 are provided:

– Each RSW division is powered by its respective Class 1E division. In the RSW system, independence is provided between Class 1E divisions, and between Class 1E divisions and non-Class 1E equipment.

– RSW System Divisions A and B components have control interfaces with the RSS as required to support RSW operation during RSS design basis conditions.

– Anti-siphon capability is not required.

– Any portions of the RSW system located outside of the Control Building, including tunnel structures used to route RSW System Piping to/from the Control Building, will be designed for extreme natural phenomena such as earthquakes, tornados, and flooding (GDC 2).

9.2.15.2.2 Power Generation Design Bases (Interface Requirements)

(1) The RSW System is designed to function during abnormally high and low water levels at the RSW pump suction. The minimum basin water level to ensure a 30-day post accident supply with no makeup is 23.55 meters MSL. The RSW pumps are designed to provide adequate flow and head at low water level of 5.18 meters MSL. To prevent biological fouling and microbial infestations, a biocide treatment is implemented using an intermittent injection upstream of the RSW pump. Thermal backwashing will not be utilized. Trash racks are not required due to the lack of large debris in the sources of makeup water.

(2) System components and piping materials are compatible with the site specific erosive and corrosive properties of the cooling water to minimize erosion/corrosion. Appropriate corrosion and erosion safety factors are used to ensure the integrity of the system for the life of the plant.

(3) The RSW System is designed to remove heat loads from RSW/RCW System (Tables 9.2-4a, 9.2-4b, and 9.2-4c) and dissipate the gained heat to atmosphere through the ultimate heat sink cooling tower.

(4) Potable water is provided to flush the service water side of the RCW heat exchangers whenever they are put into a wet standby condition (Subsection 9.2.4.1.3).

9.2.15.2.3 System Description

The RSW pump house is part of the UHS structure that is described in Subsection 9.2.5.

- The RSW system, as shown in Figure 9.2-7, operates in conjunction with the UHS to provide cooling water during normal operation, emergency shutdown, normal shutdown, testing, and loss of preferred power. The system removes heat from the RCW system and transfers it to the atmosphere via the UHS cooling tower. RSW system component data is provided in Tables 9.2-13 and 9.2-17. The heat removal requirements from the RCW system are shown in Tables 9.2-4a, 9.2-4b, and 9.2-4c.

- Each RSW system division is mechanically and electrically separated from the other divisions. The structures housing the RSW system components have interdivisional boundaries (including walls, floors, doors, and penetrations) that have a three-hour fire-rating. Additionally, each division is protected from flooding, spraying, steam impingement, pipe whip, jet forces, missiles, fire from other divisions, and the effect of failure of any non-Seismic Category I equipment.

- Anti-siphon capability is not provided or necessary to prevent flooding in the event of an RSW pipe break.

- The operating time of each RSW pump is monitored in the Distributed Control System, allowing the operator to take actions for equalizing the running time of pumps from the same division.

The RSW System is composed of the following:

(1) Three independent divisions of pumps, cooling towers, and piping systems, each supplying cooling water to the corresponding divisions of the RCW system. RCW heat exchangers are located in the Control Building at elevation –2.15 meters MSL.

(2) Each division has two motor-driven, centrifugal RSW pumps located in the pump house. The distance between the pump house and the Control Building is approximately 419 ft for STP 3 & 4. RSW pumps take suction from the UHS Basin. A self-cleaning strainer is provided on the discharge line of each pump.

(3) During normal plant operation, only one RSW pump and two RCW heat exchangers are in operation in each division. During other modes of operation, the second pump and the third heat exchanger are placed in operation, as required, in each division. The required RSW pump TDH and the minimum NPSH available to the RSW pumps are based on a hydraulic analysis of the RSW system. To provide bounding pump design inputs, this hydraulic analysis models the RSW system in its most limiting condition. Operating characteristics of the RSW pumps are provided in Tables 9.2-13 and 9.2-17.

(4) The discharge lines from the two pumps of each division are combined into headers and routed in Seismic Category I concrete tunnels (Appendix 3H.6) that link the RSW pump house with the Control Building. In the Control Building, the supply header branches into three lines, one line to each of the three RCW heat exchangers. The return lines from the RCW heat exchangers are merged into return headers that are routed back through the respective divisional tunnel to the UHS cooling tower cells. The piping tunnels maintain the physical, mechanical, and electrical divisional separation of the RSW system. Tunnels are equipped with sumps and sump pumps.

(5) The safety-related mechanical and electrical equipment of the RSW pump houses are protected from external flood.

(6) Each of the three RSW divisions is powered from its respective Class 1E division.

(7) A cold weather bypass line is provided for each RSW return header to allow bypassing the cooling tower and discharging the heated water above the water surface in the UHS basin.

(8) A blowdown line is provided on the RSW pump discharge header upstream of the pump isolation valve to maintain the water chemistry and maintain the water level within the limits. The blowdown isolation valves will be closed in the event of design basis accident.

(9) RSW is used for cooling the HVAC packaged water cooled condenser of the air conditioning units installed in each RSW pump house electrical room. Each air-conditioning unit is provided with a water-cooled condenser that requires RSW cooling water at a flow rate of 20.5 m^3/h based on estimated heat load of 256 MJ/h and water temperature not to exceed 95°F. The RSW used for cooling is returned into the UHS basin.

9.2.15.2.4 Safety Evaluation (Interface Requirement)

The RSW system has the capability to provide cooling water to all three divisions of the RCW heat exchangers. Each RSW division supply line is capable of providing sufficient cooling water to the respective RCW division heat exchangers that are essential to the safe shutdown of the reactor.

Redundant pumps, strainers, valves, and instrumentation inside of the pump house are physically separated from each other by three-hour fire-rated reinforced concrete walls that are designed to preclude coincident damage to redundant equipment from equipment failure or missiles.

The components of the RSW system (electrical equipment, instrumentation and controls as well as mechanical equipment and piping) are separated and protected to the necessary extent to ensure that sufficient equipment remains operating to permit shutdown of the unit in the event of any of the following:

(1) Flooding, spraying, steam impingement, pipe whip, jet forces due to pipe rupture or equipment failure

(2) Missiles

(3) Fire from the other divisions

(4) Failure of non-seismic Category I equipment

The RSW pumps will be selected such that the required NPSH will be conservatively below the NPSH available.

The calculation performed taking into account the longest distance between the pump house and the Control Building (approx. 128 meters) revealed that in the event of an RSW line break in any RCW heat exchanger rooms and considering an active component failure, the flood level in the Control Building will not exceed 5.0 meters.

9.2.15.2.5 Instrumentation and Alarms (Interface Requirement)

All pumps stop and all automatic isolation valves outside the Control Building close upon receipt of a high water level signal in the RCW heat exchanger room in that division.

The operators monitor the differential pressure across the self-cleaning strainers to maintain low differential pressure within the operating limits. High pressure difference across the service water strainers is alarmed in the control room.

Pressure indicators and transmitters with readout to the Control Room are provided on the RSW discharge common header of each division. Remote indication of RSW temperature at the pump discharge header of each RSW Division is provided in the control room. A temperature test point is provided on each RSW return line downstream of the RCW heat exchanger.

Control is provided for manual starting or stopping each RSW pump and cooling tower fans from the control room. Interlocks prevent startup of the RSW pump unless the discharge valve is fully closed. The discharge valve starts to open after a time delay following energization of the pump motor.

During normal operation, the standby RSW pump is started automatically at the overload trip of the running pump. If a LOCA occurs, all standby pumps start and all standby valves open and the blowdown isolation valves are closed. If a loss of offsite power occurs during a LOCA, the pumps momentarily stop until transfer to standby diesel-generator power is completed. The pumps are restarted automatically according to the diesel loading sequence. No operator action is required following a LOCA to start the RSW System in its LOCA operating mode.

Manual control is provided in the main control room for opening and closing all motor operated valves associated with the RSW System.

9.2.15.2.6 Tests and Inspections (Interface Requirements)

The RSW system is designed for periodic pressure and functional testing.

Under conditions as close to design as practical, the performance of the full operational sequence that brings the system into operation for reactor shutdown and for LOCA, including operating of applicable portions of the reactor protection system and the transfer between normal and standby power sources.

9.2.16 Turbine Service Water System

9.2.16.2 Portions Outside the Scope of ABWR Standard Plant

STP DEP 9.2-10

The conceptual design information in this subsection of reference ABWR DCD is replaced with the following supplements and site specific departure.

9.2.16.2.2 Power Generation Design Bases (Interface Requirements)

STP DEP 9.2-10

The following site-specific departure addresses the COL License Information item in this subsection.

The following TSW system design features are site-dependent:

(1) The temperature increase across the Turbine Building cooling water (TCW) heat exchangers is 6.0°C. The pressure drop across the heat exchangers is 69 kPa.

(2) The available NPSH for the TSW pumps at pump suction locations considering anticipated low water levels is 99kPa. The required NPSH for the TSW pumps will be less than the available NPSH during all operating conditions.

(3) The TSW pump house is located south of the STP 3 & 4 power blocks at the MCR in the STP 3 & 4 circulating water intake structure.

(4) The heat removal requirements from the TCW system are in Subsection 9.2.14.2.

(5) System low-point drains and high-point vents are provided in the TSW system as required. All components are maintained full of water (to prevent water hammer) when not in service except when undergoing maintenance.

Table 9.2-16 of the reference ABWR DCD is replaced to reflect site-specific design information for the TSW system.

9.2.16.2.3.1 General Description

The TSW system, illustrated in Figure 9.2-8 with site-specific design information, consists of three 50% capacity vertical wet pit pumps located in the circulating water intake structure. Two pumps are in operation during normal operation with one pump in standby.

The TSW pumps circulate water from the MCR through the three TCW heat exchangers (two are normally in service and one is on standby). The heated cooling water flows back to the MCR via the Circulating Water System return piping to dissipate heat to the atmosphere.

The TSW piping is interconnected with the circulating water piping to allow the TSW pumps to provide initial fill of the circulating water piping.

9.2.16.2.3.2 Component Description

Three strainers are provided (one for each TSW pump). The strainers are periodically backwashed to the MCR.

Piping and valves in the TSW system are protected from corrosion with suitable corrosion resistant material as required by the STP 3 & 4 soil and water conditions.

9.2.16.2.3.3 System Operation

The TSW system is operated from the main control room.

The standby pump is started automatically in the event the normally operating pump trips or the discharge header pressure drops below a preset limit.

In the event of loss of the preferred power source, at least one TSW pump will have the capability of being powered by the combustion turbine generator.

9.2.16.2.4 Safety Evaluation (Interface Requirements)

STP DEP 9.2-10

The following site-specific departure addresses the COL License Information item in this subsection.

As demonstrated by multiple means in Subsection 3.4.1.1.2.5, a break in the TSW line will not result in flooding of safety-related structures, systems, and components.

9.2.16.2.5 Instrumentation and Alarms (Interface Requirements)

TSW System pump status shall be indicated in the main control room.

TSW System trip shall be alarmed and the automatic startup of the standby pump shall be annunciated in the main control room.

High differential pressure across the duplex filters shall be alarmed in the main control room.

9.2.16.2.6 Tests and Inspections (Interface Requirements)

All major components are tested and inspected as separate components prior to installation, and as an integrated system after installation to ensure design performance. The systems are preoperationally tested in accordance with the requirements of Chapter 14.

The components of the TSW System and associated instrumentation are accessible during plant operation for visual examination. Periodic inspections during normal operation are made to ensure operability and integrity of the system. Inspections include measurements of cooling water flows, temperatures, pressures, water quality, corrosion-erosion rate, control positions, and setpoints to verify the system condition

9.2.17 COL License Information

9.2.17.1 HECW System Refrigerator Requirements

The following site-specific supplement addresses COL License Information Item 9.11 (COM 9.2-2):

(1) Technical requirements will be provided in the procurement document for the refrigerators to ensure there are provisions for adjusting the refrigerator capacity to chilled water outlet temperature.

(2) Detailed design documents will be provided for starting and stopping the pump and refrigerator on proper sequence.

(3) Technical requirements will be provided in the procurement documents for the pumps and refrigerators to ensure that the design of the pumps and refrigerators are capable of automatic restart, after a loss of electrical power for up to two (2) hours, under the expected environmental conditions during station blackout when electrical power is restored.

(4) Technical requirements in the procurement documents will include national standards for design, fabrication, and testing to minimize the potential for coolant leakage or release into system or surrounding equipment environs.

(5) Technical requirements will be provided in the procurement documents for evaluation of transient effects on starting and stopping or prolonged stoppage of the refrigeration/chiller units. These requirements will consider effects such as high restart circuit draw downs on safety buses, coolant-oil interactions, degassing needs, coolant gas leakage, or release in equipment areas along with flammability threats and synchronized refrigeration swapping.

9.2.17.2 Reactor Service Water System Requirements

The following site-specific supplement addresses COL License Information Item 9.12.

The following plant-specific requirements apply to the RSW system:

(1) The RSW/UHS water is periodically tested to ensure that the water chemistry is maintained in the acceptable limits. Periodic visual inspection of the intake structure is scheduled to detect biofouling and removal of any fouling accumulations that are detected.

(2) The RSW pumps will be rotated with the standby pump at a frequency less than 3 months to equalize the equipment operating time, as full flow for one pump is achieved in all cooling loops during normal operation. There are no infrequently used cooling loops.

(3) To prevent biological fouling, a biocide treatment is implemented using an intermittent injection upstream of the RSW pump as discussed in Subsection 9.2.5.

(4) Biocide-treated potable water is used for flushing of the RSW system cooling loops associated with the RCW heat exchangers whenever they are put into a wet standby condition. Appropriate methods for biocide treatment of the layup fluid will be developed following equipment procurement and applicable procedures will be developed before fuel load incorporating these methods. These procedures will be developed consistent with the plant operating procedure development plan in Section 13.5. (COM 9.2-3)

(5) Since the RSW system does not provide cooling water to any other systems, provisions for biocide treatment before layup of other systems, such as the fire-protection system, are not applicable to STP 3 & 4.

(6) Emergency procedure guidelines will be developed before fuel load to identify the operator manual actions required if a leak is detected and the affected RSW division is automatically tripped and isolated. These guidelines will be developed consistent with the plant operating procedure development plan in Section 13.5. (COM 9.2-4)

Table 9.2-4b Reactor Building Cooling Water Division B

STD DEP T1 2.14-1

* Heat in GJ/h; flow in m^3/h, sums may not be equal due to rounding.

† HECW refrigerator, room coolers (RHR, HPCF, SGTS, ~~FCS~~, CAMS), CAMS cooler, HPCF and RHR motor and mechanical seal coolers.

‡ The heat transferred from the CUW heat exchanger at the start of cooldown is appreciable, but during the critical last part of a cooldown, the heat removed is very little because the temperature difference between the reactor water and the RCW System is small. Sometimes, the operators may remove the CUW heat exchangers from service during cooldown. Thus, the heat removed varies from about that during normal operation at the start of cooldown to very little at the end of cooldown.

ƒ Includes FPC room cooler.

** Drywell (B) and RIP coolers.

†† Reactor Building sampling coolers; LCW sump coolers (in drywell and reactor building), RIP MG sets and CUW pump coolers.

Table 9.2-4c Reactor Building Cooling Water Division C

STD DEP T1 2.14-1

** Heat in GJ/h; flow in m^3/h, sums may not be equal due to rounding.*

† HECW refrigerator, room coolers, motor coolers, and mechanical seal coolers for RHR and HPCF~~, FCS~~ room cooler, SGTS room cooler.

‡ Instrument and service air coolers, CRD pump oil cooler, radwaste components, HSCR condenser, and turbine building sampling coolers.

Table 9.2-4d Design Characteristics for Reactor Building Cooling Water System Components

RCW Pumps (Two per division)		
	RCW (A)/(B)	RCW (C)
Discharge Flow Rate	1420 m^3/h/pump	1,237 m^3/h/pump
Pump Total Head	0.57 MPa	0.52 MPa
Design Pressure	1.37 MPa	1.37 MPa
Design Temperature	71°C	71°C
RCW Heat Exchangers (Three per division)		
	RCW (A)/(B)	RCW (C)
Capacity (for each heat exchanger)	~~47.73~~ 50.1 GJ/h	~~44.38~~ 46.1 GJ/h
RCW Surge Tanks		
Capacity	16 m^3 (total, each)	
Design Pressure	Static Head	
Design Temperature	71°C	
RCW Chemical Addition Tanks		
Design Pressure	1.37 MPaG	
Design Temperature	71°C	
RCW Piping		
Design Pressure	1.37 MPaG	
Design Temperature	71°C	

Table 9.2-6 HVAC Normal Cooling Water System Component Description

HNCW Chillers	
Quantity	5 (including one standby unit)
Cooling Capacity	~~9.42~~18GJ/h each
Chilled water flow per unit	~~450~~560 m^3/h
Supply temperature	7°C
Condenser water flow per unit	~~420~~894 m^3/h
Supply temperature (maximum)	~~45°~~ 41°C
Control	Inlet guide vane
Condenser	Shell and tube
Evaporator	Shell and tube
HNCW Water Pumps	
Quantity	5 (including one standby ~~unit~~ pump)
Type	Centrifugal, horizontal
Capacity m^3/h each	~~450~~560
~~Total discharge head~~	~~0.49 MPa~~

Table 9.2-7 HVAC Normal Cooling Water Loads

Name of Area or Unit	During Normal Operation		During Refueling Shutdown	
	Capacity GJ/h	Flow m^3/h	Capacity GJ/h	Flow m^3/h
~~Reactor Building~~				
Drywell Coolers	~~0.96~~ **1.74**	~~69.5~~ **53.9**	~~0.80~~ **1.74**	~~69.5~~**53.9**
RIP Coolers	~~1.59~~**4.52**	~~20.9~~**141**	~~3.06~~ **0.00**	~~104~~ **0.00**
~~Others (Note 1)~~	~~10.05~~	~~131~~	~~18.84~~	~~636~~
Reactor Building Secondary Containment Air Handling Units	**5.34**	**166**	**5.34**	**166**
Reactor Building Nonsafety-Related Coolers	**0.84**	**26.0**	**2.02**	**76.0**
Control Building MG Set and Nonsafety-Related Electric. Equipment Room. Coolers	**0.94**	**29.1**	**0.94**	**29.1**
Turbine Building ~~(Note 2)~~ (Note 2) **Air Handling Units and Room Coolers**	~~2.26~~**46.2**	~~43.5~~**1450**	~~1.13~~**36.3**	~~39~~**1140**
Radwaste Building	~~5.69~~4.36	~~81.2~~**132**	~~6.70~~4.36	~~232~~**132**
(Note 4)				
Service Building	~~3.64~~2.34	~~175~~**72.6**	~~3.64~~2.40	~~175~~**74.3**
Others	4.61	~~151~~**144**	3.56	~~151~~**111**
(Note 5)				
Total	~~28.89~~**70.9**	~~672~~**2220**	~~37.68~~**56.7**	~~1,407~~**1790**
	(Note 6)		~~(Note 6)~~	

Table 9.2-7 HVAC Normal Cooling Water Loads

NOTES:

(1) ~~*Loads include reactor/turbine building supply units, HVH, FCU and room coolers.*~~ **DELETED**

(2) ~~*Loads are the offgas cooler condenser (normal operation only) and the electrical equipment supply unit.*~~***Loads include the offgas cooler condenser (normal operation only) and the electrical equipment supply unit.***

(3) Deleted

(4) Loads included are the radwaste building supply unit and the radwaste building electrical equipment room supply unit.

(5) Loads include HVH units not previously included.

(6) The HNCW chillers are ~~***9.38***~~ **18**GJ/h each and the pumps ~~***449***~~ **560**m^3/h each **(Table 9.2-6)**. Thus, four HNCW **chillers and** pumps have total ~~*capacity*~~ **capacities** in excess of the amount required as shown in the ~~*last*~~ **first and second** columns of this table.

Table 9.2-11 Turbine Island Auxiliary Equipment

The TCW System removes heat from the following components:

- HVAC normal cooling water chillers
- Generator stator coolers, hydrogen coolers, and generator gas dryer cooler~~seal oil coolers and exciter coolers and breaker coolers~~
- Turbine lube coolers
- Mechanical vacuum pump seal coolers
- Isophase bus coolers
- Electro-hydraulic control coolers
- Reactor feed pump and auxiliary coolers
- Standby reactor feed pump motor coolers
- Condensate pump motor coolers
- Heater drain pump motor coolers
- **Sample coolers**
- Condensate booster pump oil and motor coolers
- Offgas condenser

Table 9.2-13 Reactor Service Water System (Interface Requirements)

RSW Pumps (Two per division)	
Discharge flow rate, per pump	~~1,800~~ **3290** m^3/h
Pump total discharge pressure~~head~~	~~0.34~~**0.67** MPa
~~Design~~Max. operating pressure	0.~~79~~**1.42** MPa
Design temperature	50°C
RSW Piping and Valves	
Design pressure	**1.56**~~1.08~~ MPa
Design temperature	50°C

Table 9.2-14 Potable and Sanitary Water System Components (Interface Requirements)

Component	Major Design Features
All tanks are vertical, cylindrical type except where noted. All water pumps are horizontal, centrifugal and single stage. All chemical feed pumps are positive displacement diaphragm type.	
Potable Water System Components	
Potable Water Storage Tank	
Capacity	~~23 m^3~~ **45 m^3**
Potable Water Pump	
Quantity	2
Capacity	~~23 m^3/h~~ **45 m^3/h each**
Head	~~18 m~~ **58 m**
Hypochlorinator Pump	
Capacity	~~0.6 m^3/h~~ **1.2 m^3/h**
Head	9m
Hypochlorite Tank	
Capacity	~~0.2 m^3~~ **0.4 m^3**
Hydropneumatic Pressure Tank	
Type	Horizontal, cylindrical
Capacity	~~15 m^3~~ **30 m^3**
Design pressure	1.03 MPaG
Air Compressor	
Type	Piston, single-stage
Capacity	~~5 m^3/min~~ **10 m^3/min**
Discharge pressure	0.8 MPaG
Sewage Treatment System Components	
Comminutor	
Type	Revolving vertically-slotted drum
Aeration Tank	
Quantity	2
Volume	~~25 m^3~~ **100 m^3each**

Table 9.2-14 Potable and Sanitary Water System Components (Interface Requirements) (Continued)

Component	**Major Design Features**
Clarifier	
Quantity	1 large, 2 small
Volume	~~19m^3, 7m^3~~ **76 m^3, 28 m^3**
Hypochlorite Contact Tank	
Volume	~~4.25 m^3~~ **17 m^3**
Component	Major Design Features
Aerobic Digester	
Quantity	2
Volume	~~25 m^3~~ **100 m^3** each
Air Blower	
Quantity	3
Capacity	~~0.34 m^3/min~~ **1.36 m^3/min** each
Froth Spray Pump	
Capacity	~~6 m^3/h~~ **24 m^3/h**
Head	30 m
Hypochlorite Feed Pump	
Capacity	~~1.5 m^3/h~~ **6 m^3/h**
Head	30 m
Hypochlorite Tank	
Capacity	~~0.4 m^3~~ **1.6 m^3**

Table 9.2-15 Makeup Water Preparation System Components (Interface Requirements)

Component	Major Design Features
All tanks are vertical, cylindrical type. All water pumps are horizontal, centrifugal and single-stage except the RO feed pumps. All chemical feed pumps are positive displacement, diaphragm type.	
Well and Well Pumps	
Capacity	At least ~~450~~ **540** m^3/h
Well Water Storage Tank/Basin	
Capacity	~~38~~ **450** m^3
Well Water Forwarding Pumps	
Quantity	2
Capacity	~~230~~ **460** m^3/h
Filters	
Quantity	~~2~~ 4
Capacity	~~230~~ **155** m^3/h each
Type	Pressure type, dual media
Filtered Water Storage Tank	
Capacity	~~150~~ **450** m^3
Backwash Pumps	
Quantity	2
Capacity	450 m^3/h each
Head	27m
RO Feed Pumps	
Quantity	4 (2 per train)
Type	Horizontal, multistage
Capacity	~~45~~**90** m^3/h per train
Head	2.75 to 3.43 MPaG
RO First Pass	
Quantity	2
Type	2-to-1 array of thin film composite membranes
Capacity	68 m^3/h permeate each with 25% rejection
RO Second Pass	
Quantity	2
Type	1-to-1 array of thin film composite membranes
Capacity	45 m^3/h permeate each with 33% rejection
RO Permeate Storage Tank	
Capacity	~~20~~ **60** m^3

Table 9.2-15 Makeup Water Preparation System Components (Interface Requirements) (Continued)

Component	Major Design Features
Demineralizer Feed Pumps	
Quantity	4 (2 per train)
Capacity	~~23~~**90** m^3/h ~~each~~per train
Head	16m
Demineralizers	
Quantity	6 (2 normally operating)
Capacity	~~23~~ **45** m^3/h each
Resin	~~1.1~~ **2.2** m^3 ~~of 1:2 cation/anion resin each~~
Demineralized Water Prover Tanks **Quantity** **Capacity**	 **2** **760 m^3 each**
Demineralized Water Storage Tanks	
Quantity	2
Capacity	~~380~~ **1900** m^3 each
Demineralized Water Forwarding Pumps	
Quantity	~~3~~ **6 (2 trains of 3 pumps)**
Capacity	~~45~~**135** m^3/h per train
Chemical Feed Tank (H_2SO_4) **Capacity**	 **2.2 m^3**
Chemical Feed Pump (H_2SO_4) **Quantity**	 **2**
Chemical Feed Tank (NaHMP)	
Capacity	~~0.8~~ **1.6** m^3
Chemical Feed Pump (NaHMP)	
Quantity	2
Capacity	~~0.04~~ **0.08** m^3/h each
Chemical Feed Tank (NaOH)	
Capacity	~~1.5~~ **3.0** m^3
Chemical Feed Pump (NaOH)	
Quantity	4 (three normally operating with one spare)
Capacity	~~0.04~~ **0.08** m^3/h

Table 9.2-16 Turbine Service Water System (Interface Requirement)

TSW Pumps (Three 50% pumps)	
Discharge Flow Rate	4600 m^3/h per pump
Pump Total Head	~~0.34~~0.37 MPa
Design Pressure	~~0.69~~0.96 MPaG
Design Temperature	50°C
TSW Piping and Valves	
Design Pressure	~~0.69~~0.96 MPaG
Design Temperature	50°C

Table 9.2-17 Design Data for Reactor Service Water System

Design data		Division A	Division B	Division C
RSW design flow rate to RCW heat exchangers	m^3/h	3240	3240	3240
RCW heat exchanger temperature increase at maximum load	°C	6.3	6.4	6.6
RCW heat exchanger pressure drop	MPa	[1]	[1]	[1]
RSW pump NPSH required	m	[1]	[1]	[1]
RSW pump NPSH available at pump's centerline based on the minimum water level of 2.74 m above suction line's centerline	m	15.9	15.9	15.9

[1] Reference Section 9.2.15.2.1

Table 9.2-18 RSW System Performance Data for Various Modes of Operation

Operating Mode	RSW Flow per division (m^3/h)	No. of heat exchangers in operation	Flow through each heat exchanger (m^3/h)	No. of pumps in operation per division	RSW Pump total head (m)
Normal	3240	2	1620	1	65.6
Reactor Shutdown 4 Hours	4860	3	1620	2	55.3
Reactor Shutdown 24 Hours	4860	3	1620	2	55.3
Hot Standby	4860	3	1620	2	55.3
Hot Standby LOPP	4860	3	1620	2	55.3
LOCA	4860	3	1620	2	75.5

Table 9.2-19 Heat Loads for 30-Day LOCA

Case D1		
Time	**Component**	**HEAT LOAD (MWt)**
0–60 seconds	Fuel Relaxation	See Table 9.2-20a
0–120 seconds	Metal-Water-Reaction	See Table 9.2-20a
0–1 day	Stored Energy	See Table 9.2-20b
	2 HPCF Pumps	See Table 9.2-21a
0–2 days	6 RSW & RCW Pumps	See Table 9.2-21a
	Other LOCA Heat Loads	See Table 9.2-22
2–30 days	2 RSW & RCW Pumps	See Table 9.2-21a
	Other LOCA Heat Loads	See Table 9.2-22
0–30 days	3 LPFL Pump	See Table 9.2-21a
	Decay Power @ 4400 MWt [1]	See Table 9.2-20a
	Case D2	
Time	Component	HEAT LOAD (MWt)
0–60 seconds	Fuel Relaxation	See Table 9.2-20a
0–120 seconds	Metal-Water-Reaction (MWR)	See Table 9.2-20a
0–1 day	Stored Energy	See Table 9.2-20b
	2 HPCF Pumps	See Table 9.2-21b
0–2 days	6 RSW & RCW Pumps	See Table 9.2-21b
	Other LOCA Heat Loads	See Table 9.2-22
2–30 days	4 RSW & RCW Pumps	See Table 9.2-21b
	Other LOCA Heat Loads	See Table 9.2-22
0–30 days	3 LPFL Pump	See Table 9.2-21b
	Decay Power @ 4400 MWt [1]	See Table 9.2-20a

[1] A higher reactor output is conservatively used for the UHS analysis.

Table 9.2-20a Shutdown Power for Cases D1 & D2

Day	Shutdown Time (sec)	Decay Power Fract. 2σ	Fuel Relaxation	MWR	Shutdown Power Heat Load MWt
	0.00E+00	1.00E+00	0	0.03	4.54E+03
	1.00E-01	1.00E+00	0.02455	0.03	4.63E+03
	1.00E+00	5.10E-01	0.2455	0.03	3.46E+03
	2.00E+00	3.40E-01	0.3915	0.03	3.34E+03
	4.00E+00	2.00E-01	0.4977	0.03	3.19E+03
	1.00E+01	6.70E-02	0.3197	0.03	1.83E+03
	2.00E+01	4.75E-02	0.06639	0.03	6.30E+02
	6.00E+01	3.92E-02	2.32E-05	0.03	3.02E+02
	8.00E+01	3.74E-02	0	0.03	2.94E+02
	1.00E+02	3.56E-02	0	0.03	2.85E+02
	1.20E+02	3.47E-02	0	0.03	2.81E+02
	1.50E+02	3.34E-02	0	0	2.27E+02
	2.00E+02	3.12E-02	0	0	1.37E+02
	4.00E+02	2.74E-02	0	0	1.20E+02
	6.00E+02	2.53E-02	0	0	1.11E+02
	1.00E+03	2.25E-02	0	0	9.91E+01
	2.00E+03	1.87E-02	0	0	8.24E+01
	4.00E+03	1.51E-02	0	0	6.65E+01
	6.00E+03	1.33E-02	0	0	5.86E+01
	1.00E+04	1.15E-02	0	0	5.07E+01
	2.00E+04	9.60E-03	0	0	4.22E+01
	4.00E+04	8.01E-03	0	0	3.52E+01
	6.00E+04	7.19E-03	0	0	3.17E+01
1	8.64E+04	6.58E-03	0	0	2.89E+01
	1.00E+05	6.26E-03	0	0	2.75E+01
2	1.73E+05	5.42E-03	0	0	2.38E+01

Table 9.2-20a Shutdown Power for Cases D1 & D2 (Continued)

Day	Shutdown Time (sec)	Decay Power Fract. 2σ	Fuel Relaxation	MWR	Shutdown Power Heat Load MWt
	2.00E+05	5.11E-03	0	0	2.25E+01
3	2.59E+05	4.81E-03	0	0	2.11E+01
4	3.46E+05	4.36E-03	0	0	1.92E+01
	4.00E+05	4.08E-03	0	0	1.80E+01
5	4.32E+05	4.02E-03	0	0	1.77E+01
	6.00E+05	3.70E-03	0	0	1.63E+01
	8.00E+05	3.32E-03	0	0	1.46E+01
10	8.64E+05	3.20E-03	0	0	1.41E+01
	1.00E+06	2.94E-03	0	0	1.29E+01
20	1.73E+06	2.49E-03	0	0	1.09E+01
	2.00E+06	2.32E-03	0	0	1.02E+01
30	2.59E+06	2.17E-03	0	0	9.55E+00

Table 9.2-21b Stored Energy for Cases 1 & 2

Temperature from (°C):		288.89		Temperature to (°C)	0
Temperature drop (°C):		288.89		Avg. Temperature (°C)	144.44
Vessel	Mass (kg)	907200			
Internals	Mass (kg)	408240			
Piping	Mass (kg)	63504			
C. Steel	Mass (kg)	1378944		C (kJ/kg-°C)	0.54
Sensible Energy (MJ)		2.17E+05			
Fuel (UO2):	Mass (kg)	181440		C (kJ/kg-°C)	0.272
Sensible Energy (MJ)		1.43E+04			
Assembly (Zr):	Mass (kg)	81648		C (kJ/kg-°C)	0.310
Sensible Energy (MJ)		7.31E+03			
Water:	Mass (kg)	331128		uf @ 562.04 K (kJ/kg)	1274.18
				uf @ 273.15 K (kJ/kg)	0.00
Sensible Energy (MJ)		4.22E+05			
Steam:	Mass (kg)	9979.2		ug @ 562.04 K (kJ/kg)	2578.60
				uf @ 273.15 K (kJ/kg)	0.00
Sensible & Latent Energy (MJ)		2.57E+04			
Total Stored Energy (MJ)		6.86E+05		released evenly in 1 day (assumed)	
Stored Energy Rate (MW)		7.94		released evenly in 1 day (assumed)	

Table 9.2-21a Pump Heat for Case D1

Efficiency:	100%		1 hp = 0.7457 kW
System	**kW**	**No. of Pump**	**Duration**
HPCF	**1491.4**	2	2 for 1 day, 0 for rest 29 days
LPFL	**596.6**	3	Conservatively assumed on for 30 day LOCA
RSW	**555.5**	6	6 for first 2 days, 2 for rest 28 days
RCW	**326.6**	6	6 for first 2 days, 2 for rest 28 days
Total Pump Heat Loads (MW)			
Day 1	**10.07**		
Day 2	**7.08**		
Day 30	**3.55**		

Table 9.2-21b Pump Heat for Case D2

Efficiency:	100%		1 hp = 0.7457 kW
System	**kW**	**No. of Pump**	**Duration**
HPCF	1491.4	2	2 for 1 day, 0 for rest 29 days
LPFL	596.6	3	Conservatively assumed on for 30 day LOCA
RSW	555.5	6	6 for first 2 days, 4 for rest 28 days
RCW	326.6	6	6 for first 2 days, 4 for rest 28 days
Total Pump Heat Loads (MW)			
Day 1	10.07		
Day 2	7.08		
Day 30	5.32		

Table 9.2-22 Other LOCA Loads for Cases D1 & D2

LOCA Heat Load (MWt)						
	Total	**RHR HX**	**Other Heat Loads**			
Div A	41.5	26.56	14.94			
Div B	43.5	26.56	16.94			
Div C	38.8	26.56	12.24			
Day 2: Total LOCA Heat Load for Div A+B+C:			44.12			
Day 30: Total LOCA Heat Load for Div A+B [1]:			31.88			

[1] Div C has the least LOCA HL, hence assumes turnoff after 2 day of LOCA

Table 9.2-23a Meteorological Conditions Which Maximize Water Temperature (Worst 1-Day)

Time (hr)	Wet Bulb Temperature (WBT) (°C)	Dry Bulb Temperature (DBT) (°C)	Pressure (P) (Pa)
1	27.7	28.9	9.984E+04
2	27.4	27.8	9.991E+04
3	27.2	27.2	9.997E+04
4	27.2	27.2	1.000E+05
5	26.4	27.2	1.000E+05
6	26.3	26.7	1.007E+05
7	26.4	27.2	1.007E+05
8	26.1	26.1	1.007E+05
9	26.1	26.1	1.007E+05
10	26.1	26.1	1.007E+05
11	26.1	26.1	1.007E+05
12	25.6	25.6	1.008E+05
13	26.1	26.1	1.009E+05
14	27.2	27.2	1.009E+05
15	27.7	28.9	1.009E+05
16	28.2	31.1	1.010E+05
17	28.5	32.2	1.010E+05
18	27.7	32.2	1.010E+05
19	26.4	32.8	1.009E+05
20	28.5	32.2	1.008E+05
21	27.8	32.8	1.008E+05
22	27.0	32.2	1.007E+05
23	27.7	32.2	1.007E+05
24	27.0	29.4	1.008E+05

Table 9.2-23b Meteorological Conditions Which Maximize Water Usage (Worst 30-day)

Time (hr)	WBT (°C)	DBT (°C)	P (Pa)
1	24.3	27.8	1.014E+05
2	24.1	29.4	1.015E+05
3	23.9	31.1	1.015E+05
4	23.6	32.2	1.014E+05
5	24.0	32.8	1.014E+05
6	23.7	35.0	1.014E+05
7	23.1	33.9	1.013E+05
8	23.7	32.8	1.013E+05
9	24.2	33.3	1.012E+05
10	23.9	32.2	1.012E+05
11	24.0	31.7	1.011E+05
12	23.4	29.4	1.011E+05
13	23.3	27.8	1.011E+05
14	22.9	26.7	1.011E+05
15	22.4	25.0	1.012E+05
16	22.4	25.0	1.012E+05
17	22.2	24.4	1.012E+05
18	22.0	23.9	1.012E+05
19	21.9	23.3	1.012E+05
20	21.0	22.8	1.012E+05
21	21.0	22.8	1.012E+05
22	21.3	22.8	1.012E+05
23	21.7	22.8	1.012E+05
24	22.8	23.9	1.012E+05
25	24.2	27.2	1.013E+05
26	23.9	28.9	1.013E+05
27	23.6	30.0	1.013E+05

Table 9.2-23b Meteorological Conditions Which Maximize Water Usage (Worst 30-day) (Continued)

Time (hr)	WBT (°C)	DBT (°C)	P (Pa)
28	23.9	32.2	1.012E+05
29	23.7	32.8	1.012E+05
30	24.2	33.3	1.011E+05
31	23.7	33.9	1.011E+05
32	23.8	34.4	1.010E+05
33	23.7	33.9	1.010E+05
34	23.5	33.3	1.010E+05
35	23.4	31.7	1.009E+05
36	22.8	29.4	1.010E+05
37	23.3	27.8	1.010E+05
38	23.1	26.1	1.010E+05
39	22.9	25.6	1.010E+05
40	22.8	25.0	1.010E+05
41	22.6	24.4	1.010E+05
42	22.9	24.4	1.010E+05
43	23.5	25.0	1.010E+05
44	23.5	25.0	1.010E+05
45	22.9	24.4	1.010E+05
46	22.9	24.4	1.010E+05
47	22.9	24.4	1.010E+05
48	23.5	25.0	1.011E+05
49	24.3	27.8	1.011E+05
50	24.1	29.4	1.011E+05
51	23.9	30.0	1.011E+05
52	23.9	32.2	1.011E+05
53	24.2	33.3	1.011E+05
54	24.0	33.9	1.011E+05
55	24.8	34.4	1.010E+05

Table 9.2-23b Meteorological Conditions Which Maximize Water Usage (Worst 30-day) (Continued)

Time (hr)	WBT (°C)	DBT (°C)	P (Pa)
56	24.6	33.9	1.010E+05
57	24.3	33.9	1.010E+05
58	23.9	32.2	1.010E+05
59	24.2	31.1	1.009E+05
60	23.4	29.4	1.010E+05
61	23.6	27.8	1.010E+05
62	23.6	26.7	1.011E+05
63	22.9	25.6	1.011E+05
64	22.8	25.0	1.011E+05
65	22.6	24.4	1.011E+05
66	22.6	24.4	1.011E+05
67	22.4	23.9	1.011E+05
68	21.9	23.3	1.012E+05
69	22.2	23.3	1.012E+05
70	21.3	22.8	1.012E+05
71	21.3	22.8	1.013E+05
72	23.5	25.0	1.013E+05
73	24.3	27.8	1.014E+05
74	24.4	29.4	1.014E+05
75	23.7	30.6	1.013E+05
76	23.9	32.2	1.013E+05
77	23.7	32.8	1.013E+05
78	23.7	33.9	1.013E+05
79	24.0	35.0	1.012E+05
80	24.1	35.6	1.011E+05
81	24.2	34.4	1.011E+05
82	24.3	33.9	1.011E+05
83	24.2	32.2	1.010E+05

Table 9.2-23b Meteorological Conditions Which Maximize Water Usage (Worst 30-day) (Continued)

Time (hr)	WBT (°C)	DBT (°C)	P (Pa)
84	23.6	30.0	1.010E+05
85	23.4	28.3	1.011E+05
86	23.1	27.2	1.012E+05
87	22.6	25.6	1.012E+05
88	22.4	25.0	1.013E+05
89	22.2	24.4	1.013E+05
90	22.2	24.4	1.013E+05
91	22.6	24.4	1.013E+05
92	22.6	24.4	1.012E+05
93	22.4	23.9	1.012E+05
94	21.9	23.3	1.013E+05
95	21.1	22.2	1.014E+05
96	22.2	23.3	1.014E+05
97	24.0	26.7	1.014E+05
98	24.8	29.4	1.014E+05
99	24.4	30.6	1.014E+05
100	24.2	32.2	1.014E+05
101	23.7	32.8	1.013E+05
102	23.4	33.9	1.013E+05
103	24.3	36.1	1.012E+05
104	24.2	33.3	1.012E+05
105	25.7	32.8	1.011E+05
106	24.7	30.6	1.011E+05
107	25.0	31.7	1.010E+05
108	24.6	30.0	1.011E+05
109	24.1	28.3	1.012E+05
110	23.6	26.7	1.013E+05
111	23.3	25.6	1.013E+05

Table 9.2-23b Meteorological Conditions Which Maximize Water Usage (Worst 30-day) (Continued)

Time (hr)	WBT (°C)	DBT (°C)	P (Pa)
112	23.3	25.6	1.013E+05
113	23.7	25.6	1.013E+05
114	23.1	25.0	1.013E+05
115	22.9	24.4	1.013E+05
116	22.9	24.4	1.013E+05
117	22.9	24.4	1.013E+05
118	22.9	24.4	1.013E+05
119	22.8	23.9	1.013E+05
120	24.2	26.1	1.013E+05
121	24.7	27.8	1.014E+05
122	24.6	30.0	1.014E+05
123	24.6	31.1	1.014E+05
124	24.4	31.7	1.014E+05
125	24.2	32.2	1.013E+05
126	24.4	31.7	1.013E+05
127	24.5	33.3	1.012E+05
128	24.3	32.8	1.012E+05
129	23.4	28.3	1.012E+05
130	23.6	28.9	1.011E+05
131	24.7	31.7	1.010E+05
132	24.2	30.0	1.011E+05
133	23.6	27.8	1.011E+05
134	23.6	26.7	1.012E+05
135	23.5	26.1	1.013E+05
136	22.8	25.0	1.012E+05
137	23.1	25.0	1.012E+05
138	23.1	25.0	1.012E+05
139	23.1	25.0	1.012E+05

Table 9.2-23b Meteorological Conditions Which Maximize Water Usage (Worst 30-day) (Continued)

Time (hr)	WBT (°C)	DBT (°C)	P (Pa)
140	22.0	23.9	1.012E+05
141	22.4	23.9	1.012E+05
142	21.7	22.8	1.012E+05
143	21.1	22.2	1.012E+05
144	23.3	24.4	1.013E+05
145	24.5	27.2	1.013E+05
146	24.3	28.9	1.013E+05
147	24.1	30.6	1.013E+05
148	24.7	32.8	1.013E+05
149	24.8	33.3	1.012E+05
150	24.2	33.3	1.011E+05
151	24.2	32.2	1.011E+05
152	24.8	33.3	1.010E+05
153	25.3	33.9	1.010E+05
154	25.3	33.9	1.010E+05
155	24.5	33.3	1.010E+05
156	23.2	30.0	1.010E+05
157	23.1	28.3	1.010E+05
158	23.3	26.7	1.011E+05
159	23.6	26.7	1.011E+05
160	23.8	26.1	1.012E+05
161	23.7	25.6	1.012E+05
162	23.5	25.0	1.011E+05
163	22.9	24.4	1.011E+05
164	22.9	24.4	1.011E+05
165	23.5	25.0	1.011E+05
166	22.9	24.4	1.012E+05
167	22.8	23.9	1.012E+05

Table 9.2-23b Meteorological Conditions Which Maximize Water Usage (Worst 30-day) (Continued)

Time (hr)	WBT (°C)	DBT (°C)	P (Pa)
168	23.7	25.6	1.013E+05
169	24.7	27.8	1.013E+05
170	24.4	29.4	1.013E+05
171	24.3	30.0	1.013E+05
172	24.6	31.1	1.013E+05
173	25.0	32.8	1.012E+05
174	25.3	33.9	1.012E+05
175	26.1	34.4	1.011E+05
176	25.4	34.4	1.010E+05
177	25.8	34.4	1.010E+05
178	25.1	33.3	1.010E+05
179	24.2	31.1	1.010E+05
180	23.9	30.0	1.011E+05
181	23.6	27.8	1.011E+05
182	23.8	27.2	1.011E+05
183	24.0	26.7	1.012E+05
184	23.3	25.6	1.012E+05
185	23.3	25.6	1.012E+05
186	23.1	25.0	1.011E+05
187	23.1	25.0	1.011E+05
188	23.1	25.0	1.011E+05
189	23.1	25.0	1.011E+05
190	22.9	24.4	1.012E+05
191	22.6	24.4	1.012E+05
192	23.8	26.1	1.012E+05
193	25.2	28.3	1.013E+05
194	24.6	30.0	1.013E+05
195	24.4	31.7	1.013E+05

Table 9.2-23b Meteorological Conditions Which Maximize Water Usage (Worst 30-day) (Continued)

Time (hr)	WBT (°C)	DBT (°C)	P (Pa)
196	24.5	32.2	1.013E+05
197	24.8	33.3	1.012E+05
198	25.1	34.4	1.011E+05
199	24.6	35.0	1.011E+05
200	24.0	35.0	1.011E+05
201	24.8	33.3	1.010E+05
202	24.5	33.3	1.010E+05
203	23.7	31.7	1.010E+05
204	23.9	30.0	1.010E+05
205	24.0	27.8	1.011E+05
206	24.2	27.2	1.011E+05
207	24.0	26.7	1.012E+05
208	24.0	26.7	1.012E+05
209	24.4	26.7	1.012E+05
210	24.2	26.1	1.012E+05
211	23.7	25.6	1.011E+05
212	23.7	25.6	1.011E+05
213	23.7	25.6	1.011E+05
214	23.7	25.6	1.012E+05
215	22.9	24.4	1.012E+05
216	24.4	26.7	1.013E+05
217	24.7	27.8	1.013E+05
218	24.9	30.0	1.013E+05
219	25.3	31.1	1.013E+05
220	25.0	32.8	1.013E+05
221	25.0	33.9	1.012E+05
222	25.8	34.4	1.012E+05
223	24.8	34.4	1.012E+05

Table 9.2-23b Meteorological Conditions Which Maximize Water Usage (Worst 30-day) (Continued)

Time (hr)	WBT (°C)	DBT (°C)	P (Pa)
224	25.4	34.4	1.011E+05
225	25.3	32.8	1.011E+05
226	25.0	32.8	1.011E+05
227	24.7	31.7	1.010E+05
228	24.2	30.0	1.011E+05
229	24.1	28.3	1.011E+05
230	24.2	27.2	1.012E+05
231	24.4	26.7	1.012E+05
232	24.4	26.7	1.012E+05
233	24.4	26.7	1.012E+05
234	23.7	25.6	1.012E+05
235	23.7	25.6	1.012E+05
236	23.1	25.0	1.011E+05
237	23.5	25.0	1.011E+05
238	22.4	23.9	1.011E+05
239	22.4	23.9	1.011E+05
240	24.0	25.6	1.012E+05
241	24.5	28.3	1.013E+05
242	24.1	29.4	1.013E+05
243	24.2	31.1	1.013E+05
244	24.2	32.2	1.013E+05
245	24.3	33.9	1.013E+05
246	23.9	34.4	1.012E+05
247	24.3	33.9	1.012E+05
248	24.6	33.9	1.011E+05
249	25.3	33.9	1.011E+05
250	24.5	32.2	1.010E+05
251	24.2	31.1	1.010E+05

Table 9.2-23b Meteorological Conditions Which Maximize Water Usage (Worst 30-day) (Continued)

Time (hr)	WBT (°C)	DBT (°C)	P (Pa)
252	24.6	30.0	1.010E+05
253	24.1	28.3	1.010E+05
254	23.8	27.2	1.011E+05
255	23.5	26.1	1.011E+05
256	23.3	25.6	1.011E+05
257	23.8	26.1	1.012E+05
258	23.7	25.6	1.011E+05
259	24.2	26.1	1.011E+05
260	23.7	25.6	1.011E+05
261	23.7	25.6	1.011E+05
262	23.5	25.0	1.010E+05
263	22.8	23.9	1.011E+05
264	24.0	25.6	1.012E+05
265	24.7	27.8	1.012E+05
266	24.6	30.0	1.012E+05
267	24.5	32.2	1.012E+05
268	23.9	34.4	1.012E+05
269	24.2	34.4	1.011E+05
270	24.5	34.4	1.011E+05
271	24.8	34.4	1.010E+05
272	25.3	33.9	1.009E+05
273	24.7	31.7	1.009E+05
274	24.2	31.1	1.009E+05
275	23.6	30.0	1.009E+05
276	23.6	28.9	1.009E+05
277	23.6	27.8	1.010E+05
278	23.3	26.7	1.010E+05
279	23.1	26.1	1.010E+05

Table 9.2-23b Meteorological Conditions Which Maximize Water Usage (Worst 30-day) (Continued)

Time (hr)	WBT (°C)	DBT (°C)	P (Pa)
280	22.2	24.4	1.011E+05
281	22.8	25.0	1.011E+05
282	22.9	24.4	1.011E+05
283	22.9	24.4	1.010E+05
284	22.9	24.4	1.011E+05
285	22.4	23.9	1.011E+05
286	22.9	24.4	1.011E+05
287	22.9	24.4	1.011E+05
288	23.7	25.6	1.012E+05
289	24.8	28.3	1.012E+05
290	25.1	30.6	1.012E+05
291	25.2	32.2	1.012E+05
292	25.0	33.9	1.010E+05
293	24.8	33.3	1.012E+05
294	25.3	35.0	1.011E+05
295	24.5	34.4	1.011E+05
296	24.9	36.1	1.010E+05
297	24.2	34.4	1.010E+05
298	24.6	33.9	1.009E+05
299	24.2	32.2	1.009E+05
300	24.4	30.6	1.009E+05
301	24.8	28.3	1.010E+05
302	24.7	27.8	1.011E+05
303	24.0	26.7	1.011E+05
304	23.8	26.1	1.012E+05
305	23.7	25.6	1.012E+05
306	23.7	25.6	1.011E+05
307	23.7	25.6	1.011E+05

Table 9.2-23b Meteorological Conditions Which Maximize Water Usage (Worst 30-day) (Continued)

Time (hr)	WBT (°C)	DBT (°C)	P (Pa)
308	23.7	25.6	1.011E+05
309	23.5	25.0	1.011E+05
310	23.3	24.4	1.012E+05
311	22.4	23.9	1.012E+05
312	22.9	24.4	1.013E+05
313	24.5	27.2	1.013E+05
314	24.4	29.4	1.013E+05
315	24.6	31.1	1.014E+05
316	24.2	33.3	1.013E+05
317	24.0	35.0	1.013E+05
318	24.0	36.1	1.012E+05
319	23.7	36.1	1.012E+05
320	24.1	35.6	1.011E+05
321	24.9	36.1	1.011E+05
322	23.9	33.3	1.011E+05
323	23.2	30.0	1.011E+05
324	24.2	30.0	1.011E+05
325	23.9	28.9	1.011E+05
326	24.1	28.3	1.012E+05
327	24.3	27.8	1.012E+05
328	23.6	26.7	1.012E+05
329	24.0	25.6	1.012E+05
330	23.3	25.6	1.012E+05
331	23.3	25.6	1.012E+05
332	23.3	25.6	1.012E+05
333	23.1	25.0	1.012E+05
334	23.1	25.0	1.012E+05
335	23.1	25.0	1.013E+05

Table 9.2-23b Meteorological Conditions Which Maximize Water Usage (Worst 30-day) (Continued)

Time (hr)	WBT (°C)	DBT (°C)	P (Pa)
336	23.7	25.6	1.013E+05
337	24.2	27.2	1.013E+05
338	24.5	28.3	1.013E+05
339	23.1	30.6	1.014E+05
340	23.6	31.1	1.014E+05
341	23.4	30.6	1.014E+05
342	24.9	27.2	1.014E+05
343	23.6	28.9	1.013E+05
344	23.9	32.2	1.012E+05
345	23.6	32.2	1.012E+05
346	23.6	32.2	1.011E+05
347	23.1	31.7	1.011E+05
348	23.1	31.7	1.011E+05
349	23.8	29.4	1.012E+05
350	23.6	27.8	1.012E+05
351	23.1	27.2	1.012E+05
352	23.1	27.2	1.013E+05
353	23.1	26.1	1.012E+05
354	23.5	26.1	1.012E+05
355	23.3	25.6	1.012E+05
356	23.7	25.6	1.012E+05
357	23.5	25.0	1.012E+05
358	23.5	25.0	1.012E+05
359	23.1	23.9	1.013E+05
360	23.7	25.6	1.013E+05
361	24.8	28.3	1.014E+05
362	24.9	30.0	1.014E+05
363	23.2	31.1	1.014E+05

Table 9.2-23b Meteorological Conditions Which Maximize Water Usage (Worst 30-day) (Continued)

Time (hr)	WBT (°C)	DBT (°C)	P (Pa)
364	24.5	33.3	1.013E+05
365	24.2	33.3	1.013E+05
366	23.7	32.8	1.012E+05
367	23.4	35.0	1.011E+05
368	23.4	36.1	1.010E+05
369	24.1	35.6	1.010E+05
370	24.9	35.0	1.010E+05
371	25.0	33.9	1.009E+05
372	23.9	31.1	1.010E+05
373	23.4	29.4	1.011E+05
374	24.5	28.3	1.011E+05
375	24.3	27.8	1.012E+05
376	24.2	27.2	1.012E+05
377	24.4	26.7	1.012E+05
378	24.4	26.7	1.012E+05
379	24.2	26.1	1.011E+05
380	24.2	26.1	1.011E+05
381	24.0	25.6	1.011E+05
382	24.0	25.6	1.011E+05
383	24.0	25.6	1.012E+05
384	24.2	26.1	1.013E+05
385	24.7	27.8	1.014E+05
386	24.8	29.4	1.014E+05
387	24.9	31.1	1.014E+05
388	24.9	32.2	1.013E+05
389	24.2	33.3	1.013E+05
390	24.2	34.4	1.012E+05
391	24.2	35.6	1.012E+05

Table 9.2-23b Meteorological Conditions Which Maximize Water Usage (Worst 30-day) (Continued)

Time (hr)	WBT (°C)	DBT (°C)	P (Pa)
392	23.8	35.6	1.011E+05
393	24.6	35.0	1.010E+05
394	25.1	34.4	1.010E+05
395	25.3	33.9	1.010E+05
396	24.6	31.1	1.010E+05
397	24.4	29.4	1.010E+05
398	24.8	28.3	1.011E+05
399	24.7	27.8	1.012E+05
400	24.4	26.7	1.012E+05
401	24.4	26.7	1.012E+05
402	23.3	26.7	1.012E+05
403	24.7	26.7	1.012E+05
404	24.7	26.7	1.012E+05
405	24.6	26.1	1.012E+05
406	24.4	25.6	1.012E+05
407	24.4	25.6	1.013E+05
408	24.6	26.1	1.013E+05
409	25.1	27.8	1.014E+05
410	24.6	28.9	1.014E+05
411	24.4	30.6	1.014E+05
412	24.0	32.8	1.014E+05
413	24.2	33.3	1.014E+05
414	24.2	34.4	1.013E+05
415	24.9	36.1	1.012E+05
416	24.8	35.6	1.012E+05
417	24.2	35.6	1.012E+05
418	23.7	35.0	1.012E+05
419	23.9	33.3	1.012E+05

Table 9.2-23b Meteorological Conditions Which Maximize Water Usage (Worst 30-day) (Continued)

Time (hr)	WBT (°C)	DBT (°C)	P (Pa)
420	24.6	31.1	1.011E+05
421	25.0	28.9	1.012E+05
422	24.5	28.3	1.013E+05
423	24.2	27.2	1.013E+05
424	24.4	26.7	1.013E+05
425	24.5	27.2	1.013E+05
426	24.9	27.2	1.014E+05
427	24.4	26.7	1.013E+05
428	24.6	26.1	1.013E+05
429	24.6	26.1	1.014E+05
430	24.6	26.1	1.014E+05
431	24.0	25.6	1.014E+05
432	24.7	26.7	1.015E+05
433	25.4	28.9	1.015E+05
434	25.3	30.0	1.015E+05
435	25.1	31.7	1.015E+05
436	24.2	33.3	1.015E+05
437	24.6	35.0	1.014E+05
438	24.3	36.1	1.014E+05
439	24.2	35.6	1.014E+05
440	24.5	35.6	1.013E+05
441	24.9	35.0	1.013E+05
442	24.6	33.9	1.013E+05
443	24.7	32.8	1.012E+05
444	24.1	30.6	1.013E+05
445	24.6	28.9	1.013E+05
446	24.8	28.3	1.013E+05
447	24.2	27.2	1.013E+05

Table 9.2-23b Meteorological Conditions Which Maximize Water Usage (Worst 30-day) (Continued)

Time (hr)	WBT (°C)	DBT (°C)	P (Pa)
448	24.7	26.7	1.014E+05
449	24.4	26.7	1.013E+05
450	24.7	26.7	1.013E+05
451	24.2	26.1	1.014E+05
452	24.0	25.6	1.014E+05
453	24.0	25.6	1.014E+05
454	24.0	25.6	1.014E+05
455	23.1	25.0	1.015E+05
456	24.6	26.1	1.015E+05
457	25.4	28.9	1.015E+05
458	24.4	30.6	1.015E+05
459	24.4	32.8	1.015E+05
460	24.5	34.4	1.015E+05
461	23.9	34.4	1.014E+05
462	23.4	35.0	1.014E+05
463	22.6	36.1	1.013E+05
464	23.1	36.1	1.013E+05
465	24.6	35.0	1.012E+05
466	25.0	33.9	1.012E+05
467	25.2	32.2	1.012E+05
468	24.9	30.0	1.012E+05
469	25.2	29.4	1.012E+05
470	24.8	28.3	1.013E+05
471	24.7	27.8	1.013E+05
472	24.9	27.2	1.013E+05
473	24.9	27.2	1.013E+05
474	24.9	27.2	1.013E+05
475	24.7	26.7	1.013E+05

Table 9.2-23b Meteorological Conditions Which Maximize Water Usage (Worst 30-day) (Continued)

Time (hr)	WBT (°C)	DBT (°C)	P (Pa)
476	24.7	26.7	1.013E+05
477	24.4	25.6	1.013E+05
478	23.9	25.0	1.013E+05
479	23.5	25.0	1.014E+05
480	24.7	26.7	1.014E+05
481	25.2	28.3	1.014E+05
482	24.8	30.6	1.014E+05
483	24.9	32.2	1.014E+05
484	24.8	33.3	1.014E+05
485	24.2	34.4	1.013E+05
486	24.2	35.6	1.012E+05
487	25.7	36.7	1.011E+05
488	25.4	35.6	1.011E+05
489	25.4	35.6	1.012E+05
490	24.2	34.4	1.010E+05
491	23.2	33.3	1.010E+05
492	24.4	30.6	1.010E+05
493	25.5	29.4	1.010E+05
494	25.6	28.3	1.011E+05
495	25.0	27.8	1.012E+05
496	24.9	27.2	1.012E+05
497	24.9	27.2	1.012E+05
498	24.7	26.7	1.012E+05
499	24.2	26.1	1.011E+05
500	24.2	26.1	1.011E+05
501	24.2	26.1	1.011E+05
502	24.0	25.6	1.011E+05
503	24.0	25.6	1.012E+05

Table 9.2-23b Meteorological Conditions Which Maximize Water Usage (Worst 30-day) (Continued)

Time (hr)	WBT (°C)	DBT (°C)	P (Pa)
504	24.6	26.1	1.012E+05
505	25.4	28.9	1.012E+05
506	25.3	30.0	1.013E+05
507	25.1	31.7	1.013E+05
508	25.2	33.3	1.013E+05
509	24.8	35.6	1.012E+05
510	24.8	35.6	1.012E+05
511	24.8	35.6	1.011E+05
512	25.1	35.6	1.011E+05
513	25.5	36.1	1.010E+05
514	24.9	35.0	1.010E+05
515	24.8	33.3	1.010E+05
516	24.9	31.1	1.010E+05
517	25.5	29.4	1.011E+05
518	24.8	28.3	1.012E+05
519	24.5	27.2	1.013E+05
520	24.7	26.7	1.013E+05
521	24.7	26.7	1.013E+05
522	24.7	26.7	1.012E+05
523	24.2	26.1	1.012E+05
524	24.6	26.1	1.012E+05
525	24.6	26.1	1.012E+05
526	24.4	25.6	1.013E+05
527	24.6	26.1	1.013E+05
528	24.7	26.7	1.014E+05
529	25.1	27.8	1.014E+05
530	25.3	30.0	1.014E+05
531	25.5	32.2	1.014E+05

Table 9.2-23b Meteorological Conditions Which Maximize Water Usage (Worst 30-day) (Continued)

Time (hr)	WBT (°C)	DBT (°C)	P (Pa)
532	24.5	34.4	1.014E+05
533	24.8	34.4	1.014E+05
534	24.9	36.1	1.013E+05
535	24.3	35.0	1.013E+05
536	24.3	35.0	1.012E+05
537	25.1	35.6	1.012E+05
538	24.5	34.4	1.012E+05
539	24.2	33.3	1.012E+05
540	24.2	31.1	1.012E+05
541	25.2	29.4	1.013E+05
542	25.4	28.9	1.014E+05
543	25.1	27.8	1.014E+05
544	24.9	27.2	1.014E+05
545	25.3	27.2	1.014E+05
546	24.9	27.2	1.014E+05
547	24.7	26.7	1.014E+05
548	24.7	26.7	1.014E+05
549	24.7	26.7	1.014E+05
550	24.6	26.1	1.015E+05
551	23.9	25.0	1.015E+05
552	24.7	26.7	1.015E+05
553	25.7	28.9	1.016E+05
554	25.5	30.6	1.016E+05
555	24.9	32.2	1.016E+05
556	24.5	33.3	1.016E+05
557	24.3	33.9	1.015E+05
558	24.5	35.6	1.014E+05
559	24.2	35.6	1.014E+05

Table 9.2-23b Meteorological Conditions Which Maximize Water Usage (Worst 30-day) (Continued)

Time (hr)	WBT (°C)	DBT (°C)	P (Pa)
560	24.0	35.0	1.013E+05
561	24.6	35.0	1.012E+05
562	24.9	35.0	1.012E+05
563	24.2	33.3	1.012E+05
564	24.7	30.6	1.012E+05
565	24.8	29.4	1.012E+05
566	24.8	28.3	1.013E+05
567	24.7	27.8	1.013E+05
568	24.9	27.2	1.014E+05
569	24.5	27.2	1.014E+05
570	24.4	26.7	1.013E+05
571	24.7	26.7	1.013E+05
572	24.7	26.7	1.013E+05
573	24.6	26.1	1.012E+05
574	24.4	25.6	1.013E+05
575	24.4	25.6	1.013E+05
576	24.6	26.1	1.013E+05
577	25.2	28.3	1.014E+05
578	25.1	30.6	1.014E+05
579	25.2	32.2	1.014E+05
580	24.5	33.3	1.014E+05
581	24.2	34.4	1.013E+05
582	24.5	35.6	1.013E+05
583	23.9	36.7	1.012E+05
584	24.5	35.6	1.011E+05
585	25.3	35.0	1.011E+05
586	24.5	34.4	1.010E+05
587	24.5	33.3	1.010E+05

Table 9.2-23b Meteorological Conditions Which Maximize Water Usage (Worst 30-day) (Continued)

Time (hr)	WBT (°C)	DBT (°C)	P (Pa)
588	23.1	30.6	1.010E+05
589	23.7	29.4	1.011E+05
590	24.0	27.8	1.011E+05
591	24.2	27.2	1.012E+05
592	24.0	26.7	1.012E+05
593	24.0	26.7	1.012E+05
594	24.4	26.7	1.012E+05
595	24.4	26.7	1.011E+05
596	24.0	25.6	1.011E+05
597	24.0	25.6	1.011E+05
598	23.7	25.6	1.011E+05
599	23.3	24.4	1.012E+05
600	24.4	26.7	1.012E+05
601	25.4	28.9	1.012E+05
602	24.8	30.6	1.013E+05
603	24.7	31.7	1.012E+05
604	24.5	32.2	1.012E+05
605	25.1	34.4	1.012E+05
606	24.6	35.0	1.011E+05
607	24.9	36.1	1.011E+05
608	24.6	36.1	1.010E+05
609	24.9	35.0	1.010E+05
610	24.9	35.0	1.010E+05
611	24.7	32.8	1.010E+05
612	24.2	31.1	1.010E+05
613	24.1	29.4	1.011E+05
614	24.6	28.9	1.011E+05
615	24.3	27.8	1.011E+05

Table 9.2-23b Meteorological Conditions Which Maximize Water Usage (Worst 30-day) (Continued)

Time (hr)	WBT (°C)	DBT (°C)	P (Pa)
616	24.3	27.8	1.012E+05
617	24.5	27.2	1.012E+05
618	24.7	27.8	1.011E+05
619	24.5	27.2	1.011E+05
620	24.4	26.7	1.011E+05
621	24.4	26.7	1.011E+05
622	24.2	26.1	1.011E+05
623	23.7	25.6	1.012E+05
624	24.4	26.7	1.012E+05
625	25.4	28.9	1.013E+05
626	25.2	29.4	1.013E+05
627	24.6	31.1	1.013E+05
628	24.5	28.3	1.013E+05
629	25.5	33.3	1.012E+05
630	24.8	34.4	1.012E+05
631	24.8	33.3	1.011E+05
632	24.9	35.0	1.011E+05
633	24.3	35.0	1.011E+05
634	24.5	33.3	1.011E+05
635	24.2	32.2	1.011E+05
636	24.4	30.6	1.011E+05
637	24.3	28.9	1.011E+05
638	24.5	28.3	1.011E+05
639	24.7	27.8	1.012E+05
640	24.5	27.2	1.012E+05
641	24.4	26.7	1.012E+05
642	24.0	25.6	1.012E+05
643	24.2	26.1	1.012E+05

Table 9.2-23b Meteorological Conditions Which Maximize Water Usage (Worst 30-day) (Continued)

Time (hr)	WBT (°C)	DBT (°C)	P (Pa)
644	24.0	25.6	1.012E+05
645	23.9	25.0	1.012E+05
646	23.5	25.0	1.012E+05
647	23.3	24.4	1.013E+05
648	24.0	25.6	1.013E+05
649	25.2	28.3	1.014E+05
650	24.9	30.0	1.014E+05
651	24.9	32.2	1.014E+05
652	25.0	33.9	1.014E+05
653	24.3	35.0	1.013E+05
654	23.4	36.1	1.013E+05
655	24.2	35.6	1.013E+05
656	24.8	34.4	1.012E+05
657	23.7	35.0	1.012E+05
658	23.1	33.9	1.012E+05
659	24.5	32.2	1.012E+05
660	24.1	30.6	1.012E+05
661	24.3	28.9	1.012E+05
662	24.3	27.8	1.012E+05
663	24.5	27.2	1.013E+05
664	24.4	26.7	1.014E+05
665	23.8	26.1	1.014E+05
666	23.1	25.0	1.014E+05
667	22.9	24.4	1.014E+05
668	22.6	24.4	1.014E+05
669	21.9	23.3	1.014E+05
670	21.9	23.3	1.014E+05
671	21.7	22.8	1.015E+05

Table 9.2-23b Meteorological Conditions Which Maximize Water Usage (Worst 30-day) (Continued)

Time (hr)	WBT (°C)	DBT (°C)	P (Pa)
672	22.6	24.4	1.015E+05
673	24.4	26.7	1.016E+05
674	24.8	29.4	1.016E+05
675	24.4	30.6	1.016E+05
676	24.2	32.2	1.016E+05
677	24.3	35.0	1.015E+05
678	23.0	35.6	1.015E+05
679	23.4	36.1	1.014E+05
680	24.3	36.1	1.014E+05
681	24.7	36.7	1.013E+05
682	22.9	36.1	1.013E+05
683	22.0	35.0	1.013E+05
684	22.9	32.2	1.013E+05
685	23.2	30.0	1.013E+05
686	23.4	28.3	1.013E+05
687	23.1	27.2	1.013E+05
688	22.8	26.1	1.013E+05
689	22.8	26.1	1.014E+05
690	23.1	26.1	1.013E+05
691	22.9	25.6	1.013E+05
692	22.6	24.4	1.013E+05
693	22.4	23.9	1.013E+05
694	21.9	23.3	1.014E+05
695	21.9	23.3	1.014E+05
696	23.1	25.0	1.014E+05
697	24.2	27.2	1.014E+05
698	24.4	29.4	1.014E+05
699	23.9	32.2	1.014E+05

Table 9.2-23b Meteorological Conditions Which Maximize Water Usage (Worst 30-day) (Continued)

Time (hr)	WBT (°C)	DBT (°C)	P (Pa)
700	23.7	32.8	1.014E+05
701	23.7	33.9	1.013E+05
702	23.0	35.6	1.012E+05
703	22.6	36.1	1.012E+05
704	22.1	36.1	1.011E+05
705	23.1	36.1	1.011E+05
706	23.1	36.1	1.010E+05
707	23.9	33.3	1.010E+05
708	23.4	31.7	1.011E+05
709	23.4	29.4	1.011E+05
710	23.9	28.9	1.011E+05
711	24.0	27.8	1.011E+05
712	24.3	27.8	1.012E+05
713	24.2	27.2	1.012E+05
714	23.8	27.2	1.011E+05
715	23.6	26.7	1.011E+05
716	23.5	26.1	1.011E+05
717	23.5	26.1	1.011E+05
718	23.8	26.1	1.011E+05
719	23.8	26.1	1.011E+05
720	23.8	26.1	1.011E+05

Table 9.2-24 UHS Basin Water Maximum Temperature (Worst 1-Day)

Time (hr)	WBT (°C)	DBT (°C)	Heat Load (HL) (MW)	Water Mass Evap. After DBA (kg)	Daily Mass Evap. Rate After DBA (kg/hr)	Basin Temp (°C)
0	27.9	30.0	4.60E+03	0.00E+00	—	32.2
1	27.7	28.9	1.32E+02	1.81E=05	1.81E+05	32.7
2	27.4	27.8	1.18E+02	3.18E+05	—	32.9
3	27.2	27.2	1.12E+02	4.54E+05	—	33.0
4	27.2	27.2	1.09E+02	5.44E+05	—	33.1
5	26.4	27.2	1.06E+02	6.80E+05	—	33.1
6	26.3	26.7	1.04E+02	8.16E+05	—	33.0
7	26.4	27.2	1.03E+02	9.53E+05	—	32.9
8	26.1	26.1	1.01E+02	1.09E+06	—	32.9
9	26.1	26.1	1.00E+02	1.22E+06	—	32.8
10	26.1	26.1	9.87E+01	1.36E+06	—	32.7
11	26.1	26.1	9.74E+01	1.45E+06	—	32.7
12	25.6	25.6	9.67E+01	1.59E+06	—	32.6
13	26.1	26.1	9.61E+01	1.72E+06	—	32.5
14	27.2	27.2	9.55E+01	1.81E+06	—	32.5
15	27.7	28.9	9.48E+01	1.95E+06	—	32.16
16	28.2	31.1	9.42E+01	2.04E+06	—	32.7
17	28.5	32.2	9.37E+01	2.18E+06	—	32.8
18	27.7	32.2	9.33E+01	2.27E+06	—	32.9
19	26.4	32.8	9.29E+01	2.40E+06	—	32.8
20	28.5	32.2	9.26E+01	2.54E+06	—	32.8
21	27.8	32.8	9.22E+01	2.68E+06	—	32.9
22	26.9	32.2	9.19E+01	2.81E+06	—	32.9
23	27.7	32.2	9.15E+01	2.90E+06	—	32.9
24	27.0	29.4	9.11E+01	3.04E+06	1.27E+05	32.9

Table 9.2-25 UHS Basin Water Maximum Temperature (Case D1)

Time (hr)	Time (Days)	WBT (°C)	DBT (°C)	Heat Load (MW)	Water Mass Evap. After DBA (kg)	Daily Mass Evap. Rate After DBA (kg/hr)	Basin Temp (°C)
0	0	24.6	26.1	4.60E+03	0	—	32.2
1		24.3	27.8	1.32E+02	2.27E+05	2.27E+05	32.3
2		24.1	29.4	1.18E+02	4.08E+05	—	32.2
3		23.9	31.1	1.12E+02	5.90E+05	—	32.0
4		23.6	32.2	1.09E+02	7.71E+05	—	31.8
5		24.1	32.8	1.06E+02	9.53E+05	—	31.6
6		23.7	35.0	1.04E+02	1.13E+06	—	31.4
7		23.1	33.9	1.03E+02	1.32E+06	—	31.3
8		23.7	32.8	1.01E+02	1.50E+06	—	31.1
9		24.2	33.3	1.00E+02	1.68E+06	—	31.0
10		23.9	32.2	9.87E+01	1.81E+06	—	30.9
11		24.1	31.7	9.74E+01	2.00E+06	—	30.8
12		23.4	29.4	9.67E+01	2.13E+06	—	30.7
13		23.3	27.8	9.61E+01	2.31E+06	—	30.6
14		22.9	26.7	9.55E+01	2.45E+06	—	30.4
15		22.4	25.0	9.48E+01	2.59E+06	—	30.2
16		22.4	25.0	9.42E+01	2.72E+06	—	30.1
17		22.2	24.4	9.37E+01	2.86E+06	—	29.9
18		22.1	23.9	9.33E+01	2.99E+06	—	29.7
19		21.9	23.3	9.29E+01	3.08E+06	—	29.6
20		21.0	22.8	9.26E+01	3.22E+06	—	29.4
21		21.0	22.8	9.22E+01	3.36E+06	—	29.2
22		21.3	22.8	9.19E+01	3.49E+06	—	29.1
23		21.7	22.8	9.15E+01	3.63E+06	—	29.0
24		22.8	23.9	9.11E+01	3.72E+06	1.55E+05	29.0
25		24.2	27.2	8.87E+01	3.81E+06	—	29.0
26		23.6	28.9	8.62E+01	3.95E+06	—	29.1
27		23.6	30.0	8.37E+01	4.08E+06	—	29.1
28		23.9	32.2	8.17E+01	4.22E+06	—	29.1
29		23.7	32.8	8.15E+01	4.31E+06	—	29.1

Table 9.2-25 UHS Basin Water Maximum Temperature (Case D1) (Continued)

Time (hr)	Time (Days)	WBT (°C)	DBT (°C)	Heat Load (MW)	Water Mass Evap. After DBA (kg)	Daily Mass Evap. Rate After DBA (kg/hr)	Basin Temp (°C)
30		24.2	33.3	8.14E+01	4.45E+06	—	29.1
31		23.7	33.9	8.12E+01	4.58E+06	—	29.1
32		23.8	34.4	8.10E+01	4.72E+06	—	29.0
33		23.7	33.9	8.08E+01	4.85E+06	—	29.0
34		23.6	33.3	8.06E+01	4.99E+06	—	28.9
35		23.4	31.7	8.04E+01	5.13E+06	—	28.9
36		22.8	29.4	8.02E+01	5.26E+06	—	28.9
37		23.3	27.8	8.00E+01	5.35E+06	—	28.8
38		23.1	26.1	7.98E+01	5.49E+06	—	28.8
39		22.9	25.6	7.97E+01	5.58E+06	—	28.8
40		22.8	25.0	7.95E+01	5.72E+06	—	28.7
41		22.6	24.4	7.93E+01	5.81E+06	—	28.7
42		22.9	24.4	7.91E+01	5.90E+06	—	28.7
43		23.5	25.0	7.89E+01	5.99E+06	—	28.7
44		23.5	25.0	7.87E+01	6.08E+06	—	28.7
45		22.9	24.4	7.85E+01	6.21E+06	—	28.7
46		22.9	24.4	7.83E+01	6.30E+06	—	28.7
47		22.9	24.4	7.82E+01	6.40E+06	—	28.7
48	2	23.5	25.0	7.80E+01	6.49E+06	1.15E+05	28.7
72	3	23.5	25.0	5.66E+01	8.35E+06	7.75E+04	30.5
96	4	22.2	23.3	5.45E+01	1.01E+07	7.37E+04	30.7
120	5	24.2	26.1	5.30E+01	1.18E+07	6.99E+04	31.1
144	6	23.3	24.4	5.23E+01	1.35E+07	6.99E+04	30.8
168	7	23.7	25.6	5.16E+01	1.51E+07	6.80E+04	30.7
192	8	23.8	26.1	5.09E+01	1.67E+07	6.80E+04	30.8
216	9	24.3	26.7	5.03E+01	1.84E+07	6.80E+04	30.8
240	10	24.0	25.6	4.95E+01	2.00E+07	6.61E+04	30.9
264	11	24.0	25.6	4.88E+01	2.16E+07	6.80E+04	30.8
288	12	23.7	25.6	4.82E+01	2.32E+07	6.58E+04	30.6
312	13	22.9	24.4	4.80E+01	2.47E+07	6.54E+04	30.8

Table 9.2-25 UHS Basin Water Maximum Temperature (Case D1) (Continued)

Time (hr)	Time (Days)	WBT (°C)	DBT (°C)	Heat Load (MW)	Water Mass Evap. After DBA (kg)	Daily Mass Evap. Rate After DBA (kg/hr)	Basin Temp (°C)
336	14	23.7	25.6	4.78E+01	2.63E+07	6.65E+04	30.8
360	15	23.7	25.6	4.75E+01	2.79E+07	6.52E+04	30.7
384	16	24.2	26.1	4.73E+01	2.95E+07	6.58E+04	30.9
408	17	24.6	26.1	4.70E+01	3.10E+07	6.46E+04	30.9
432	18	24.7	26.7	4.68E+01	3.26E+07	6.50E+04	30.8
456	19	24.6	26.1	4.65E+01	3.41E+07	6.46E+04	30.9
480	20	24.7	26.7	4.63E+01	3.57E+07	6.48E+04	30.9
504	21	24.6	26.1	4.61E+01	3.72E+07	6.39E+04	31.0
528	22	24.7	26.7	4.59E+01	3.88E+07	6.35E+04	30.9
552	23	24.7	26.7	4.57E+01	4.03E+07	6.37E+04	30.9
576	24	24.6	26.1	4.56E+01	4.18E+07	6.35E+04	31.0
600	25	24.3	26.7	4.55E+01	4.34E+07	6.44E+04	30.8
624	26	24.3	26.7	4.53E+01	4.49E+07	6.37E+04	31.0
648	27	24.0	25.6	4.52E+01	4.64E+07	6.26E+04	30.8
672	28	22.6	24.4	4.51E+01	4.79E+07	6.48E+04	30.1
696	29	23.1	25.0	4.50E+01	4.96E+07	6.82E+04	30.1
720	30	23.8	26.1	4.48E+01	5.12E+07	6.77E+04	30.1

Table 9.2-26 UHS Basin Water Maximum Temperature (Case D2)

Time (hr)	Time (Days)	WBT (°C)	DBT (°C)	Heat Load (MW)	Mass Evap. After DBA (kg)	Daily Mass Evap. Rate After DBA (kg/hr)	Basin Temp (°C)
0	0	24.6	26.1	4.60E+03	0.00E+00	—	32.2
1		24.3	27.8	1.32E+02	2.27E+05	2.27E+05	32.3
2		24.1	29.4	1.18E+02	4.08E+05	—	32.2
3		23.9	31.1	1.12E+02	5.90E+05	—	32.0
4		23.6	32.2	1.09E+02	7.71E+05	—	31.8
5		24.1	32.8	1.06E+02	9.53E+05	—	31.6
6		23.7	35.0	1.04E+02	1.13E+06	—	31.4
7		23.1	33.9	1.03E+02	1.32E+06	—	31.3
8		23.7	32.8	1.01E+02	1.50E+06	—	31.1
9		24.2	33.3	1.00E+02	1.68E+06	—	31.0
10		23.9	32.2	9.87E+01	1.81E+06	—	30.9
11		24.1	31.7	9.74E+01	2.00E+06	—	30.8
12		23.4	29.4	9.67E+01	2.13E+06	—	30.7
13		23.3	27.8	9.61E+01	2.31E+06	—	30.6
14		22.9	26.7	9.55E+01	2.45E+06	—	30.4
15		22.4	25.0	9.48E+01	2.59E+06	—	30.2
16		22.4	25.0	9.42E+01	2.72E+06	—	30.1
17		22.2	24.4	9.37E+01	2.86E+06	—	29.9
18		22.1	23.9	9.33E+01	2.99E+06	—	29.7
19		21.9	23.3	9.29E+01	3.08E+06	—	29.6
20		21.0	22.8	9.26E+01	3.22E+06	—	29.4
21		21.0	22.8	9.22E+01	3.36E+06	—	29.2
22		21.3	22.8	9.19E+01	3.49E+06	—	29.1
23		21.7	22.8	9.15E+01	3.63E+06	—	29.0
24	1	22.8	23.9	9.11E+01	3.72E+06	1.55E+05	29.0
25		24.2	27.2	8.87E+01	3.81E+06	—	29.0
26		23.9	28.9	8.62E+01	3.95E+06	—	29.1
27		23.6	30.0	8.37E+01	4.08E+06	—	29.1
28		23.9	32.2	8.17E+01	4.22E+06	—	29.1
29		23.7	32.8	8.15E+01	4.31E+06	—	29.1

Table 9.2-26 UHS Basin Water Maximum Temperature (Case D2) (Continued)

Time (hr)	Time (Days)	WBT (°C)	DBT (°C)	Heat Load (MW)	Mass Evap. After DBA (kg)	Daily Mass Evap. Rate After DBA (kg/hr)	Basin Temp (°C)
30		24.2	33.3	8.14E+01	4.45E+06	—	29.1
31		23.7	33.9	8.12E+01	4.58E+06	—	29.1
32		23.8	34.4	8.10E+01	4.72E+06	—	29.0
33		23.7	33.9	8.08E+01	4.85E+06	—	29.0
34		23.6	33.3	8.06E+01	4.99E+06	—	28.9
35		23.4	31.7	8.04E+01	5.13E+06	—	28.9
36		22.8	29.4	8.02E+01	5.26E+06	—	28.9
37		23.3	27.8	8.00E+01	5.35E+06	—	28.8
38		23.1	26.1	7.98E+01	5.49E+06	—	28.8
39		22.9	25.6	7.97E+01	5.58E+06	—	28.8
40		22.8	25.0	7.95E+01	5.72E+06	—	28.7
41		22.6	24.4	7.93E+01	5.81E+06	—	28.7
42		22.9	24.4	7.91E+01	5.90E+06	—	28.7
43		23.5	25.0	7.89E+01	5.99E+06	—	28.7
44		23.5	25.0	7.87E+01	6.08E+06	—	28.7
45		22.9	24.4	7.85E+01	6.21E+06	—	28.7
46		22.9	24.4	7.83E+01	6.30E+06	—	28.7
47		22.9	24.4	7.82E+01	6.40E+06	—	28.7
48	2	23.5	25.0	7.80E+01	6.49E+06	1.15E+05	28.7
72	3	23.5	25.0	5.83E+01	8.57E+06	8.69E+04	28.9
96	4	22.2	23.3	5.63E+01	1.06E+07	8.32E+04	28.7
120	5	24.2	26.1	5.48E+01	1.24E+07	7.56E+04	29.1
144	6	23.3	24.4	5.40E+01	1.42E+07	7.75E+04	28.7
168	7	23.7	25.6	5.33E+01	1.61E+07	7.75E+04	29.0
192	8	23.8	26.1	5.27E+01	1.79E+07	7.56E+04	29.0
216	9	24.3	26.7	5.20E+01	1.97E+07	7.56E+04	29.2
240	10	24.0	25.6	5.13E+01	2.15E+07	7.56E+04	29.1
264	11	24.0	25.6	5.06E+01	2.33E+07	7.28E+04	28.9
288	12	23.7	25.6	5.00E+01	2.50E+07	7.30E+04	28.5
312	13	22.9	24.4	4.98E+01	2.68E+07	7.13E+04	28.8

Table 9.2-26 UHS Basin Water Maximum Temperature (Case D2) (Continued)

Time (hr)	Time (Days)	WBT (°C)	DBT (°C)	Heat Load (MW)	Mass Evap. After DBA (kg)	Daily Mass Evap. Rate After DBA (kg/hr)	Basin Temp (°C)
336	14	23.7	25.6	4.95E+01	2.85E+07	7.30E+04	28.7
360	15	23.7	25.6	4.93E+01	3.02E+07	7.03E+04	28.6
384	16	24.2	26.1	4.90E+01	3.19E+07	7.13E+04	29.1
408	17	24.6	26.1	4.88E+01	3.36E+07	7.11E+04	29.3
432	18	24.7	26.7	4.86E+01	3.53E+07	7.14E+04	29.3
456	19	24.6	26.1	4.83E+01	3.70E+07	7.14E+04	29.1
480	20	24.7	26.7	4.81E+01	3.87E+07	7.11E+04	29.2
504	21	24.6	26.1	4.79E+01	4.04E+07	7.07E+04	29.2
528	22	24.7	26.7	4.77E+01	4.21E+07	6.99E+04	29.3
552	23	24.7	26.7	4.75E+01	4.38E+07	7.03E+04	29.3
576	24	24.6	26.1	4.74E+01	4.55E+07	7.01E+04	29.3
600	25	24.3	26.7	4.72E+01	4.72E+07	7.07E+04	28.8
624	26	24.3	26.7	4.71E+01	4.89E+07	7.03E+04	29.1
648	27	24.0	25.6	4.70E+01	5.05E+07	6.84E+04	28.7
672	28	22.6	24.4	4.69E+01	5.22E+07	6.96E+04	27.7
696	29	23.1	25.0	4.67E+01	5.39E+07	7.03E+04	27.7
720	30	23.8	26.1	4.66E+01	5.56E+07	7.01E+04	28.6

The following figures are either modified or are new, and are located in Chapter 21:

- Figure 9.2-1 Reactor Building Cooling Water System P&ID (Sheet 1-9)
- Figure 9.2-2 HVAC Normal Cooling Water System P&ID
- Figure 9.2-4 Makeup Water (Condensate) System P&ID
- Figure 9.2-5 Makeup Water System (Purified) P&ID (Sheet 1-3)
- Figure 9.2-7 Reactor Service Water System P&ID (Sheets 1-3)
- Figure 9.2-9 Potable and Sanitary Water System P&ID (Sheet 2 of 2)

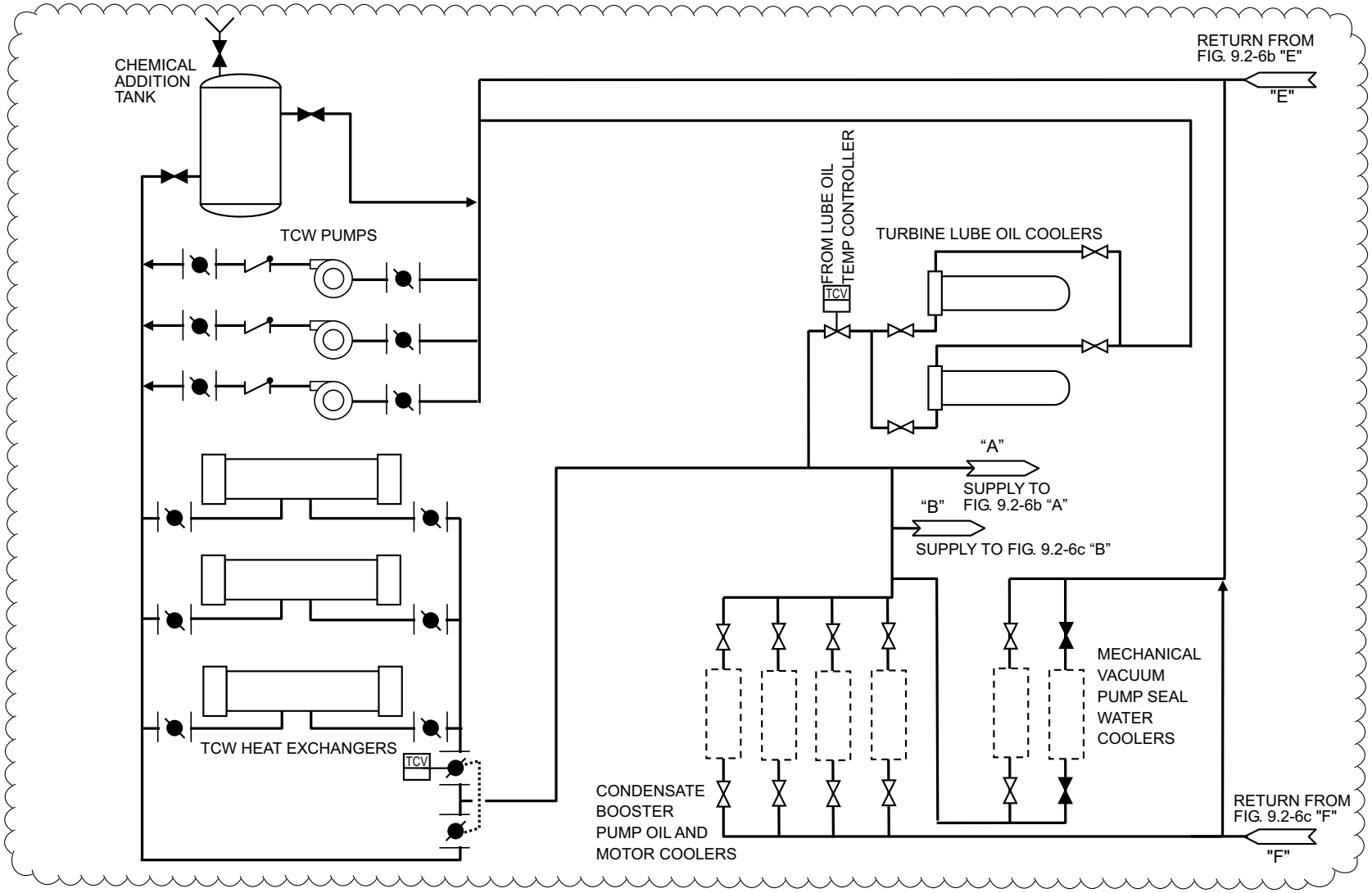

Figure 9.2-6a Turbine Building Cooling Water System Diagram

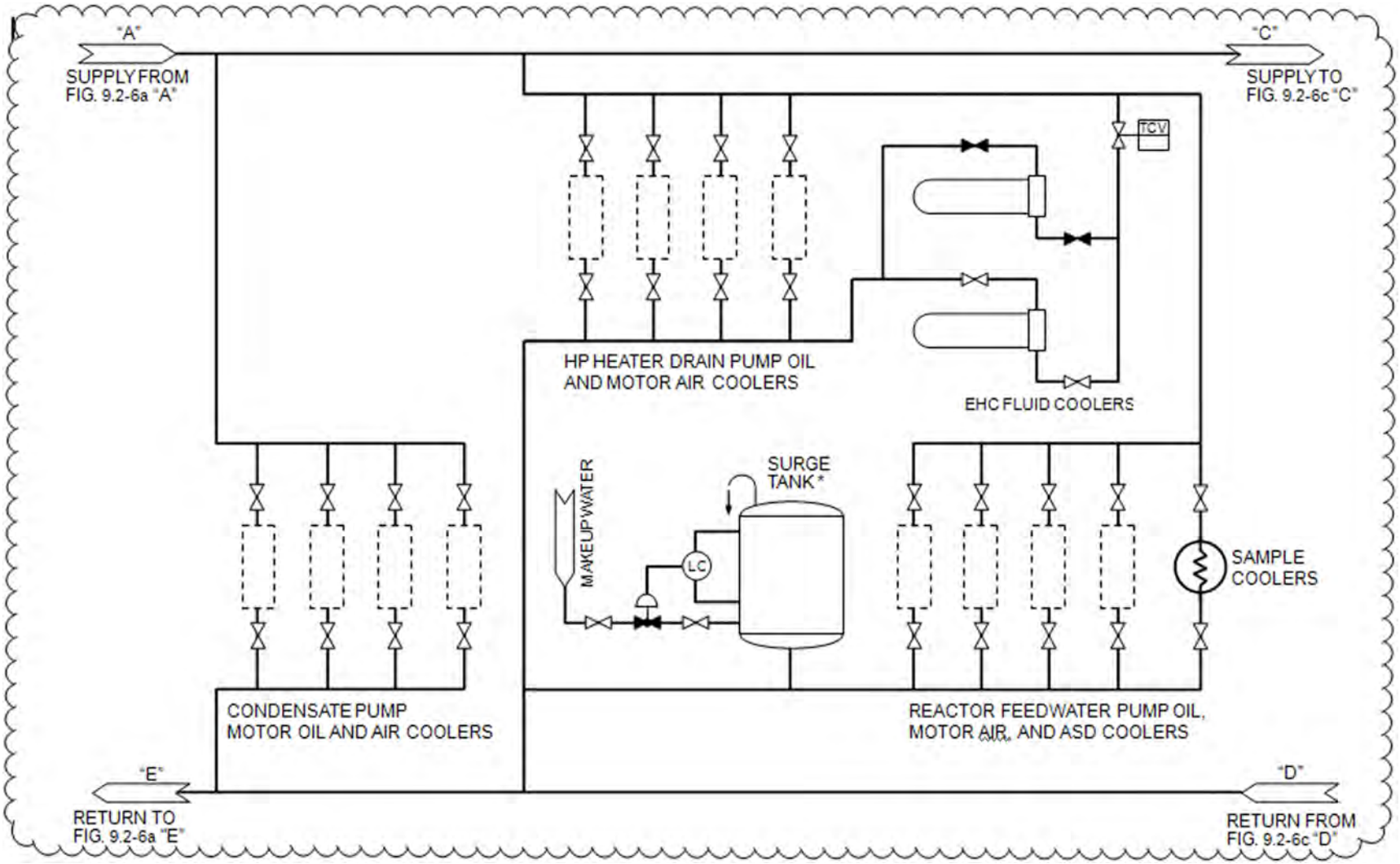

Figure 9.2-6b Turbine Building Cooling Water System Diagram

*The surge tank is shared with the HNCW system.

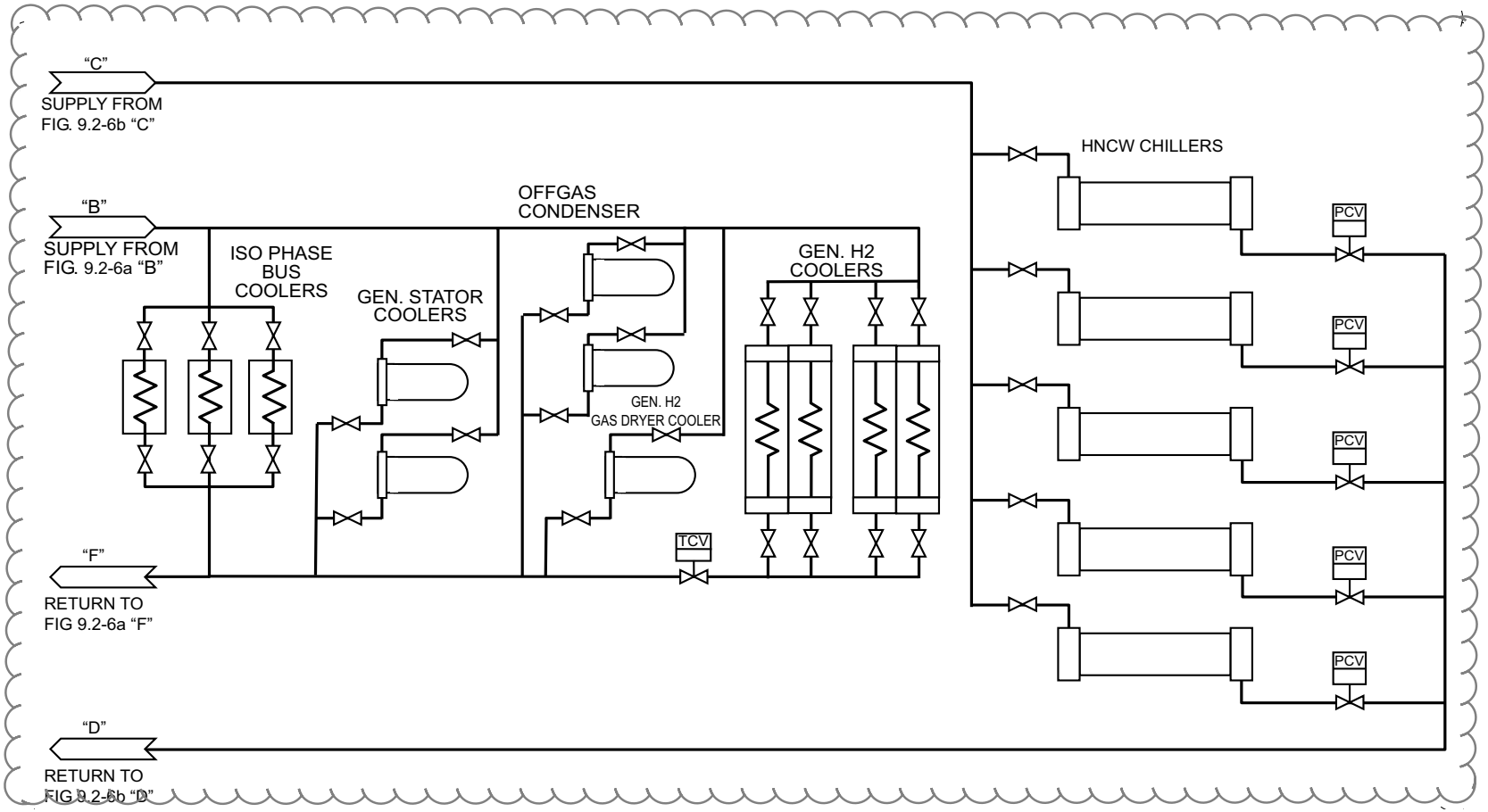

Figure 9.2-6c Turbine Building Cooling Water System Diagram

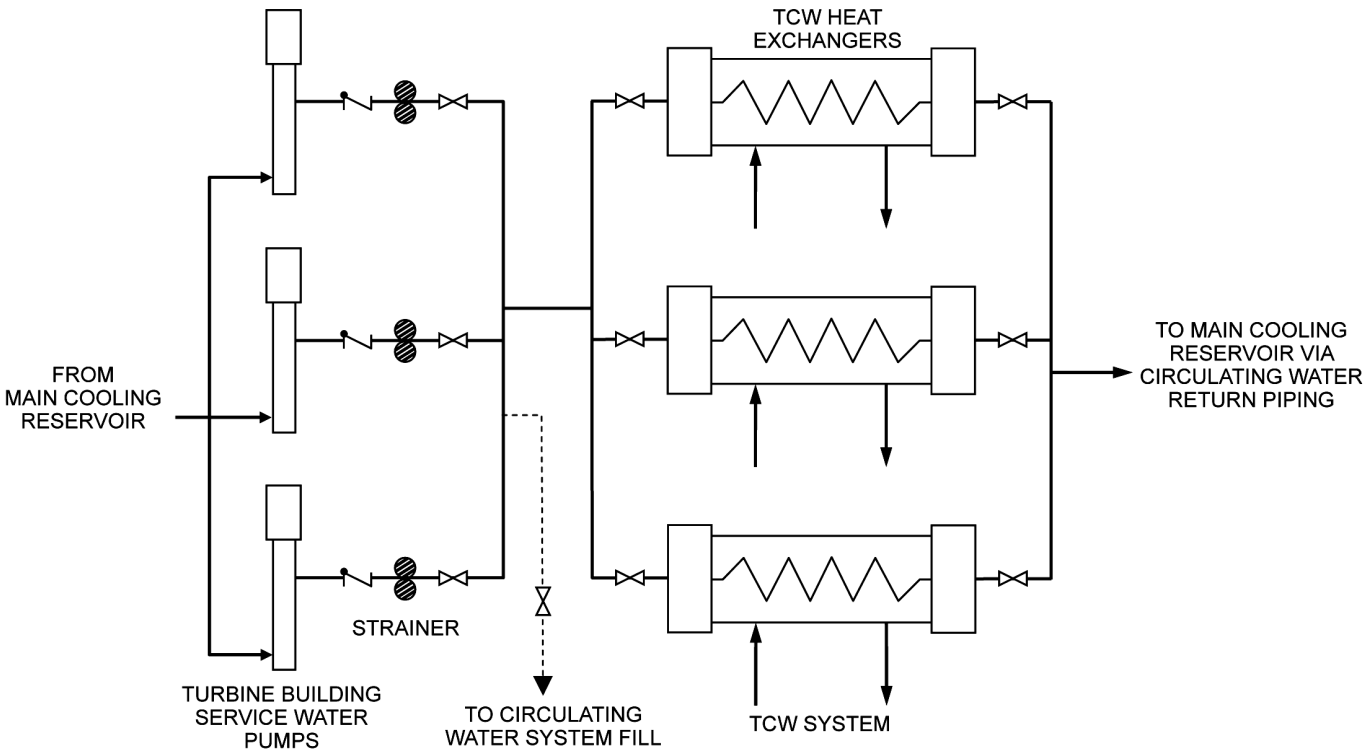

Figure 9.2-8 Turbine Building Service Water System

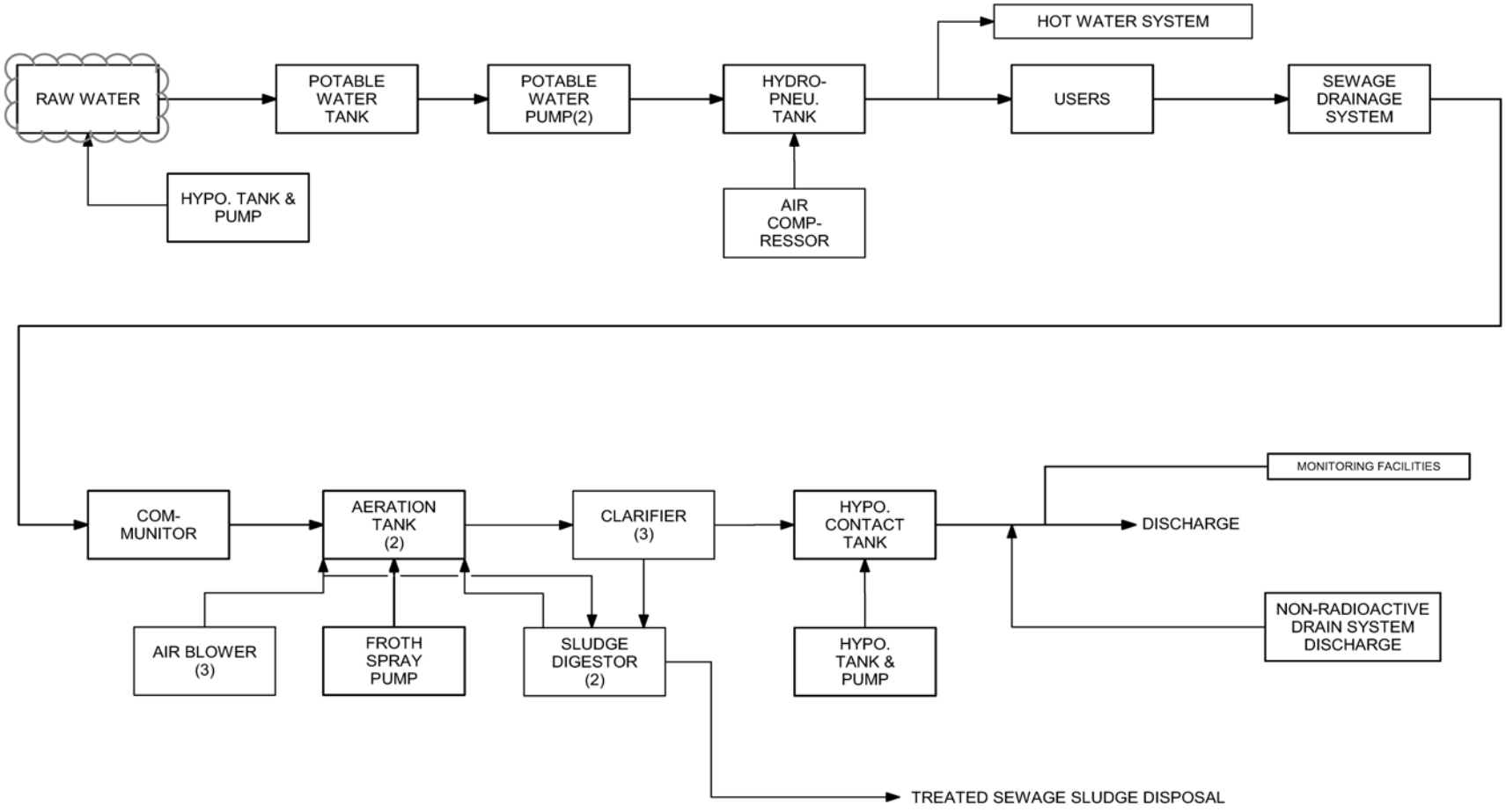

Figure 9.2-9 Potable and Sanitary Water System (Sheet 1 of 2)

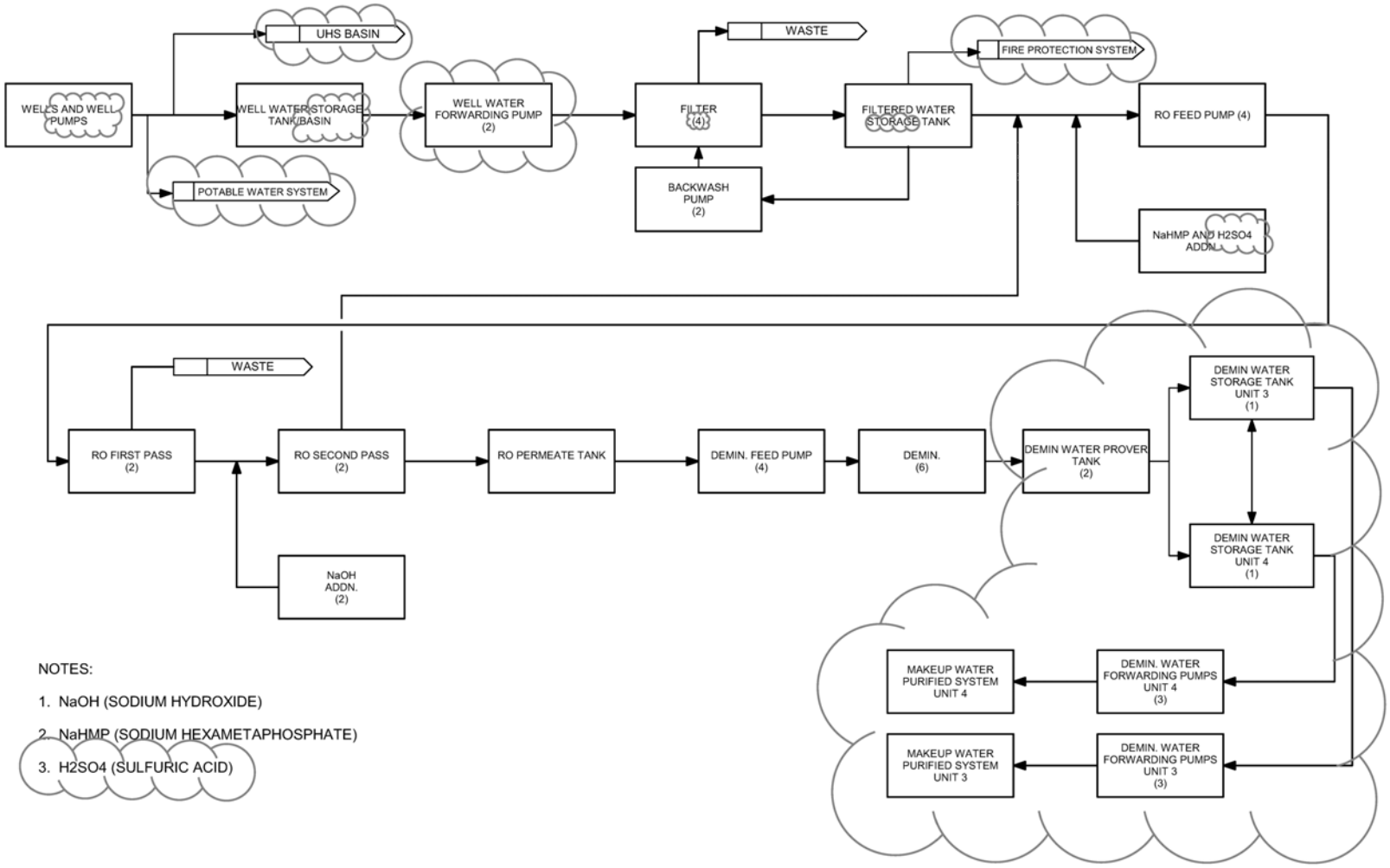

Figure 9.2-10 Makeup Water Preparation System (Interface Requirements)

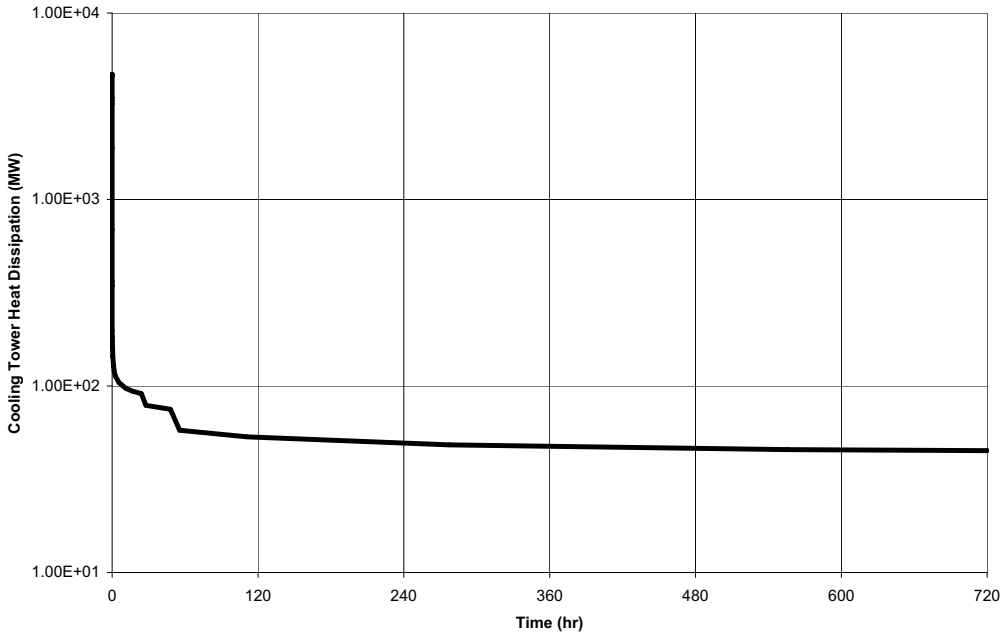

Figure 9.2-11 Cooling Tower Heat Dissipation (Case D1)

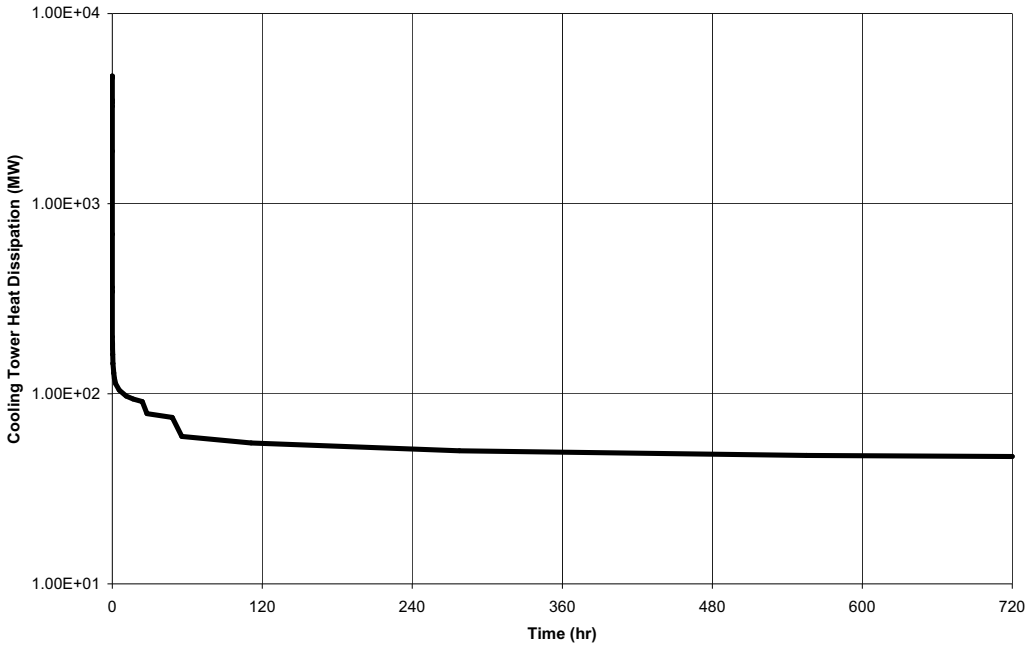

Figure 9.2-12 Cooling Tower Heat Dissipation (Case D2)

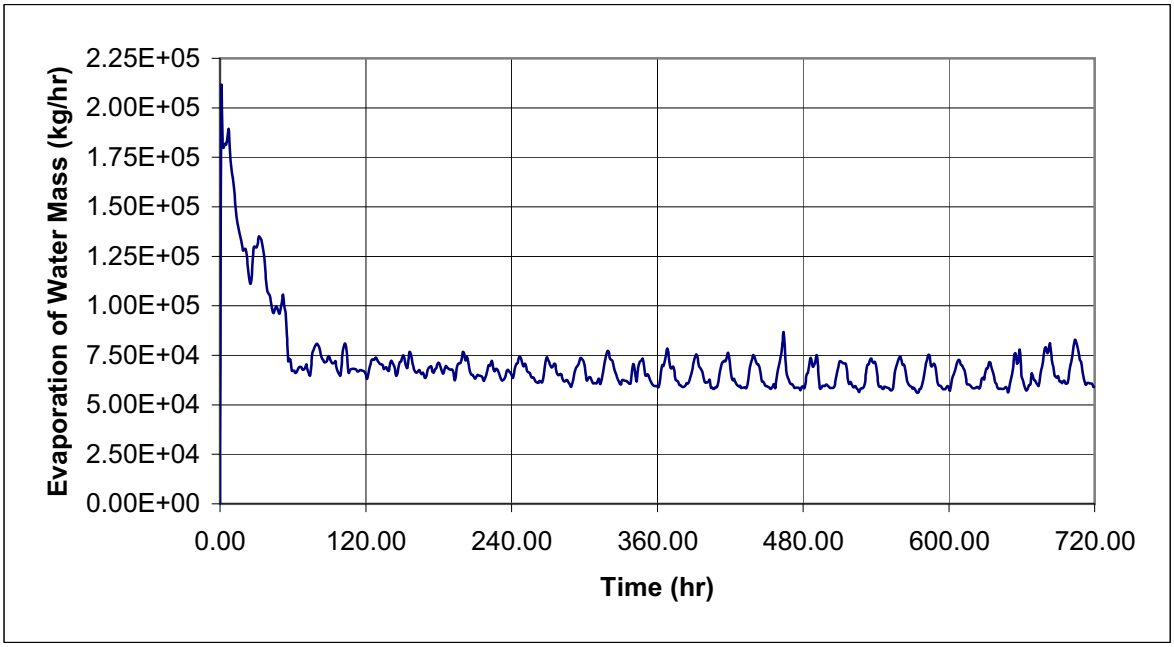

Figure 9.2-13 Thirty-Day Water Evaporation for Case D1

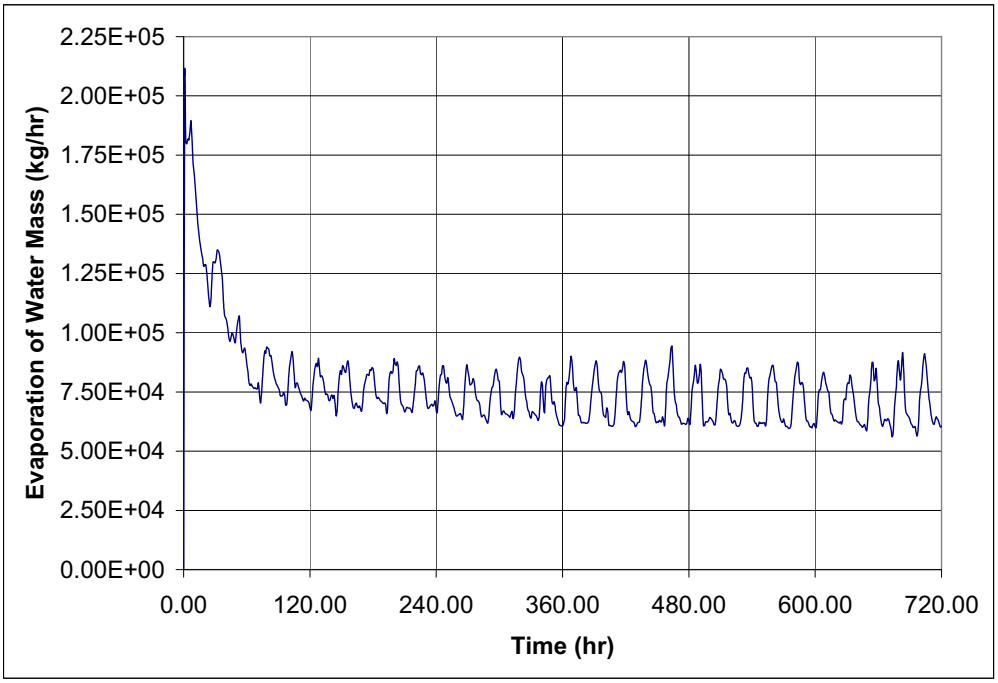

Figure 9.2-14 Thirty-Day Water Evaporation for Case D2

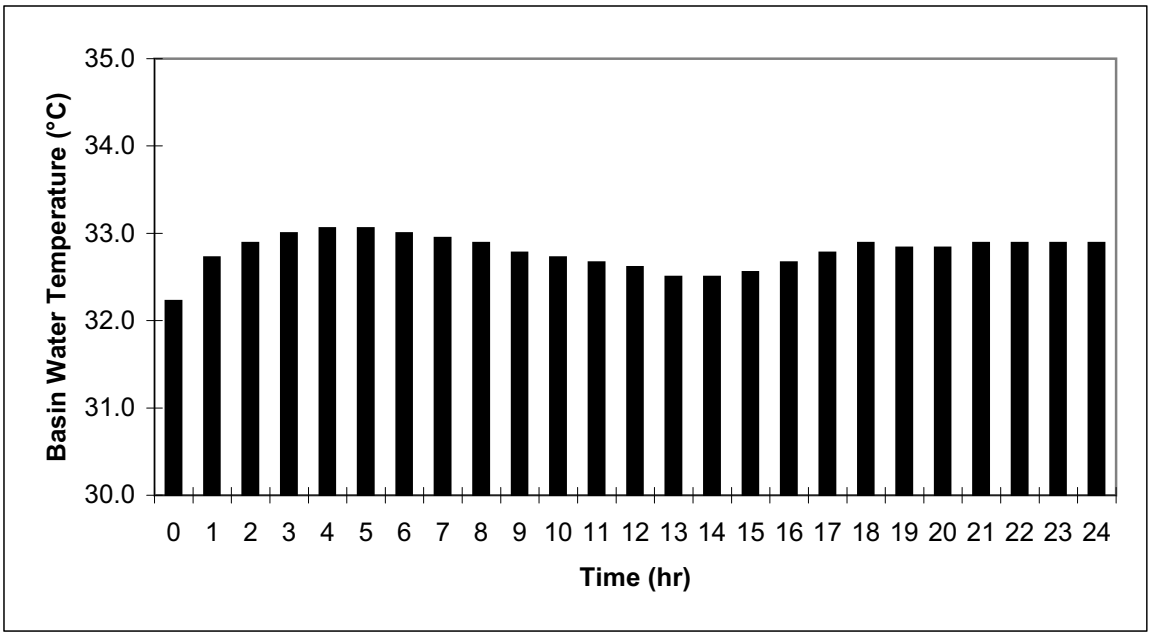

Figure 9.2-15 UHS Basin Water Maximum Temperature (Worst 1-Day)

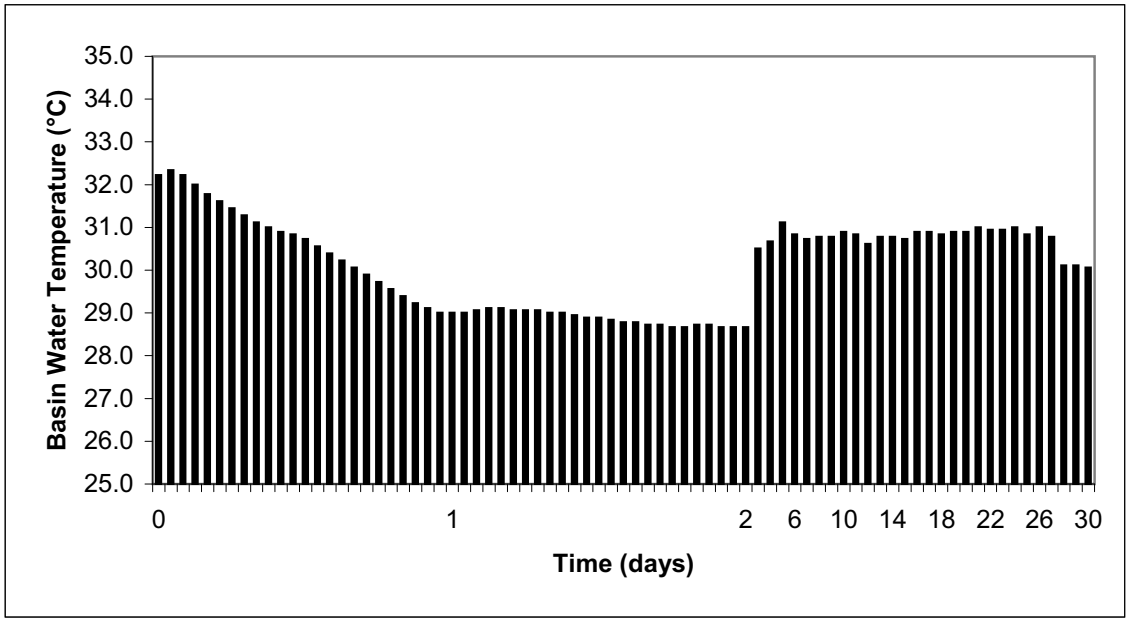

Figure 9.2-16 UHS Basin Water Maximum Temperature (Case D1)

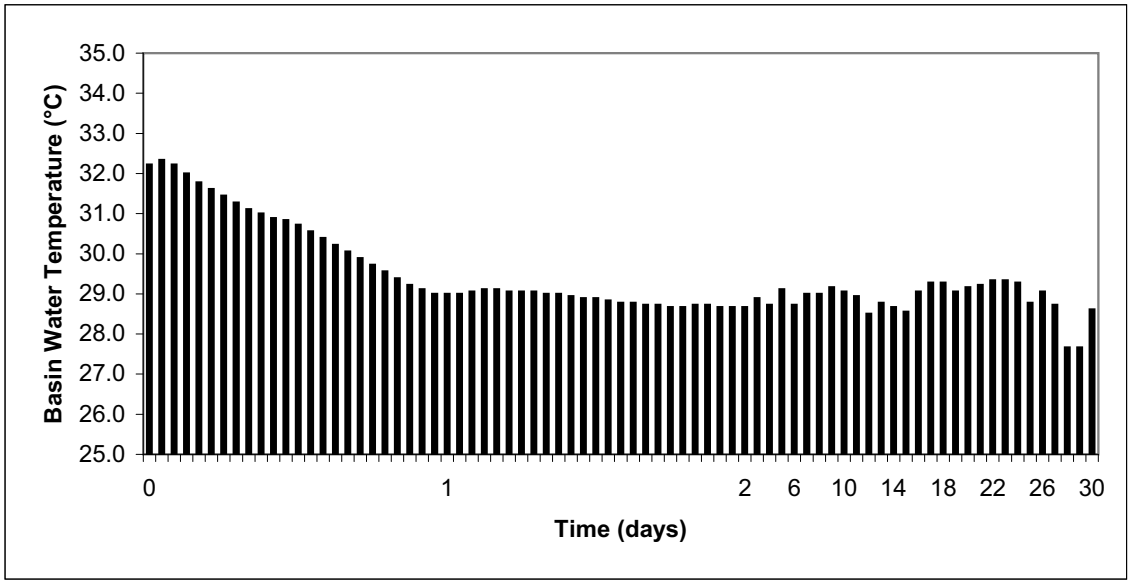

Figure 9.2-17 UHS Basin Water Maximum Temperature (Case D2)

9.3 Process Auxiliaries

The information in this section of the reference ABWR DCD, including all subsections, tables, and figures, is incorporated by reference with the following departures and supplements.

STD DEP Admin

STP DEP 1.1-2

STD DEP 9.3-1

STD DEP 9.3-2

STD DEP 9.3-3 (Table 9.3-2)

9.3.2 Process and Post Accident Sampling System

STD DEP Admin

STD DEP 9.3-3

9.3.2.1.1 Safety Design Bases

(4) The sampling panels are designed to minimize contamination and radiation at the sample stations. Appropriate shielding, where required, and area radiation monitors minimize radiation effects. Radiation exposure to the individual shall be limited as given in ITAAC ~~3.7~~ 3.2.

9.3.3 Non-Radioactive Drainage System

9.3.3.2 Non-Radioactive Drains (Interface Requirements)

The design of the continuation of the non-radioactive drain system from the ABWR Standard Plant Buildings to the site discharge outfall is provided in Figure 9.3-12 and is discussed in this subsection.

9.3.3.2.3 System Description

The conceptual design information in this subsection of the reference ABWR DCD is replaced with the following site-specific supplement.

The non-radioactive drain system collects waste water from plant buildings (Reactor, Turbine, Control, Service, and other buildings). A system composed of collection piping, curbs, and pumps is provided. Non-radioactive waste water from the Turbine Building, Reactor Building, hot machine shop and the Control Building is routed to a dedicated oil/water separator where oil and settled solids are removed for off-site disposal. The non-oily, non-radioactive effluent is sent to dual settling basins. Non-radioactive waste water from the Service Building and other buildings is sent directly to the dual settling basins. Means are provided to perform any required tests or analyses required by the discharge permit. The non-radioactive liquid effluent is

discharged to the Main Cooling Reservoir through permitted outfall(s). If radioactivity levels exceed the limits for discharge, the flow from the non-radioactive drains has the capability to be diverted to the radioactive effluent portion of the radwaste system. Normally, if low levels of radioactivity are detected, it is quantified and discharged via the normal outfall. Higher levels of radioactivity may require a permitted "batch" discharge via the radwaste effluent radiation monitor. The non-radioactive drainage system is illustrated in Figure 9.3-12.

9.3.7 Service Air System

The information in this section of the reference ABWR DCD, including all subsections, tables and figures, is incorporated by reference with the following departure

9.3.7.2 System Description

STD DEP 9.3-2

The SAS provides compressed air for tank sparging, filter/demineralizer backwashing, air-operated tools and other services requiring air of lower quality than that provided by the IAS. ~~Breathing air requirements are provided by the SAS.~~ The Breathing Air System (BAS) is discussed in Subsection 9.3.7.6.

Service Air	
Pressure (design)	*~~0.69~~ 0.87 MPa*
Dewpoint (°C)	*no requirement*

9.3.7.6 Breathing Air System

9.3.7.6.1 Design Bases

9.3.7.6.1.1 Safety Design Bases

The BAS is classified as non-safety related with the exception of the primary containment isolation function.

The primary containment penetration of the BAS is equipped with a locked closed manual isolation valve outside and a locked closed manual isolation valve inside containment (GDC 56). The BAS primary containment penetration and associated isolation valves are designed to Seismic Category I, ASME Code, Section III, Class 2, Quality Group B and Quality Assurance B requirements.

9.3.7.6.1.2 Power Generation Design Bases

The functions of BAS are to provide the following:

(1) Supply low pressure breathable air for use by workers during periods when actual or potential airborne contamination exists.

(2) A means for charging high pressure self-contained breathing apparatus.

9.3.7.6.2 System Description

The BAS is designed to provide compressed air of suitable breathing quality for nonsafety-related functions.

The BAS provides a continuous supply of low pressure breathing air for protection against airborne contamination while performing maintenance inspection and cleaning work. The BAS also provides a means for charging high pressure self-contained breathing apparatus.

The BAS is sized to provide 100% of the peak air consumption using the bottled breathing air supply and a portable permanent breathing air compressor supply system, as needed. The compressors(s) will be of the oil-less, breathing air type.

The BAS is also sized to charge high pressure self-contained breathing apparatus.

The BAS flow diagram is shown in Figure 9.3-10.

The BAS process quality requirements are listed below.

Breathing Air	
Pressure (design of BAS)	689 kPaG
Pressure (design of self-contained breathing apparatus charging)	17.23 MPaG
ANSI Compressed Gas Association (CGA) 7.1-1997, “Commodity Specification for Air”	Air Quality Grade D

The BAS is designed to meet applicable regulatory requirements regarding limiting personnel exposure to airborne radioactivity and maintaining breathing air quality, including those defined by the NRC in 10 CFR 20 and Occupational Safety and Health Act Requirements (OSHA) in 29 CFR 1910. In addition, the BAS design is consistent with Regulatory Guide 8.15.

The BAS containment and penetration and associated isolation valves are designed to Seismic Category I, ASME Code, Section III, Class 2, Quality Group B and Quality Assurance B requirements.

The bottled breathing air supply and a portable or permanent breathing air compressor supply system, as needed,are operated during normal operation.

Outside and inside primary containment manually-operated valves are kept closed and locked during normal plant operation. During refueling, the valves are opened to provide air inside the containment. This arrangement meets GDC 56, Option (1).

9.3.7.6.3 Safety Evaluation

The availability of breathing air is not required to assure any of the following:

(1) Integrity of the reactor coolant pressure boundary.

(2) Capability to shut down the reactor and maintain it in a safe shutdown condition.

(3) Ability to prevent or mitigate the consequences of accidents which can result in potential offsite exposures comparable to the guideline exposures of 10 CFR 100.

However, the containment penetration and isolation valves associated with the breathing air system are relied upon to maintain the integrity of the containment pressure boundary as discussed in Section 9.3.7.6.1.1. The operability of this containment pressure boundary function is necessary to assure (3) above.

9.3.7.6.4 Inspection and Testing Requirements

The BAS is proved operable by its use during normal plant operation. Portions of the system normally closed to airflow can be tested to ensure system operability and integrity.

9.3.7.6.5 Instrumentation Application

Instrumentation for the BAS is primarily local, consisting of pressure, differential pressure and temperature indication and/or control. Pressure transmitters and pressure switches provide control room pressure indications and alarms. The system is maintained at constant pressure, with local pressure reduction provided as required.

9.3.8.2.3 Component Description

STD DEP 9.3-1

Drain System components are as follows:

(1) Collection Piping— In all area of potential radioactivity contamination, the collection system piping for the liquid system is of stainless steel for embedded and chemical drainage, and ~~carbon steel~~ for suspended drainage. Offsets in the piping are provided, where necessary, for radiation shielding. In general the fabrication and installation of the piping provides for a uniform slope that causes gravity to flow to the appropriate sump. During construction, equipment drain piping is terminated not less than 5 cm above the finished floor or drain receiver at each location where the discharge from equipment is to be collected. The connections to the individual equipment are made after the equipment is installed in its proper location.

9.3.9 Hydrogen Water Chemistry System

9.3.9.2 System Description

STP DEP 1.1-2

The HWC System (Figure 9.3-8) is composed of hydrogen and oxygen supply systems, systems to inject hydrogen into the feedwater and oxygen into the offgas and

subsystems to monitor the effectiveness of the HWC System. These systems monitor the oxygen levels in the Offgas System and the reactor water.

The hydrogen supply system will be site dependent. Hydrogen can be supplied either as a high-pressure gas or as a cryogenic liquid. Hydrogen and oxygen can also be generated on site by the dissociation of water by electrolysis. The HWC hydrogen supply system may be integrated with the generator hydrogen supply system to save the cost of having separate gas storage facilities for both systems. However, bulk hydrogen storage will be located outside ~~*but near*~~ *the Turbine Building*, at least 100m from any safety related building or structure, *as stated in Subsection 10.2.2.2.*

The oxygen supply system will be site dependent. A single oxygen supply system could be provided to meet the requirements of the HWC System and the condensate Oxygen Injection System described in Subsection 9.3.10.

9.3.12 COL License Information

9.3.12.4 Radioactive Drain Transfer System

The following standard supplement addresses COL License Information Item 9.15.

Equipment and floor drain P & I Ds are provided in Figure 9.3-11, Sheets 1 through 22. See Subsection 9.3.8.1.1.

Table 9.3-2 Water Quality Instrumentation

Field System ID	Instrument Sensor	Sensor Location*	Indicator Location	Recorder Location	Instrument Range	Instrument Accuracy	Recommended Alarm Setpoints	
							High	High-High
	Conductivity	Sample Line	Condensate sample station panel	Sample station planel	0 to 1 NL 0.1μ S/cm MS	±1% FS	0.1 μ S/cm	—
Treated condensate combined treatment unit outlet	Oxygen analyzer	Sample line[†]	Condensate sample station panel	Control room	0 to ~~100~~250 ppb[‡] Oxygen	+5% FS	200 ppb O_2	—
Feedwater	Oxygen analyzer	Sample line	Condensate sample station	Control room	0 to 250 ppb Oxygen	+5% FS	200 ppb O_2	—
	Corrosion products monitor	Sample line	Feedwater sample station	Control room	0 to 1 ppm[f]	—	—	—
	Conductivity	Sample line	Condensate sample station or feedwater sample station	Control room	0 to 1 NL 0.1μ S/cm MS	±1% FS	0.1μ S/cm	—
~~Control rod drive water~~	~~Oxygen analyzer~~	~~Sample line~~	~~Reactor sample station panel~~	~~Control room~~	~~0 to 1000 ppb Oxygen~~	~~±5% FS~~	~~200 ppb O_2~~	—
	~~Conductivity~~	~~Sample line~~	~~Reactor sample station panel~~	~~Control room~~	~~0 to 1 NL 0.1m S/cm MS~~	~~±1% FS~~	~~0.2m S/cm~~	—
Reactor water cleanup system inlet (high temp)[f]	Conductivity	Sample line	Reactor sample station panel	Control room	0 to 10 NL 0.1μ S/cm MS	±1% FS	0.7 μ S/cm	3.5 μ S/cm
	Oxygen analyzer	Sample line	Reactor sample station panel	Control room	0 to 10 ppm Oxygen	±5% FS	—	—

FS = Full Scale Range MS = Midscale NL = Nonlinear

Table 9.3-2 Water Quality Instrumentation (Continued)

Field System ID	Instrument Sensor	Sensor Location*	Indicator Location	Recorder Location	Instrument Range	Instrument Accuracy	Recommended Alarm Setpoints	
							High	High-High
RHR Heat Exchanger Outlet (3)	Conductivity	Sample Line	Local Panel	Main control Room	0 to 10 NL 1μ S/cm MS	±1% FS	3μ S/cm	10μ S/cm
Condensate Transfer Pump Outlet	Conductivity	Sample Line	Condensate Sample Station Panel	Sample Station Panel	0 to 1 NL 0.1μ S/cm MS	±1% FS	0.1μ S/cm	—
Suppression Pool Cleanup Outlet	Conductivity	Sample Line	Local Panel	Main control Room	0 to 1 NL 0.1μ S/cm MS	±1% FS	0.1μ S/cm	0.2μ S/cm
LCW Process Line	Conductivity	Process Line	Local Panel	Radwaste Control Room	0 to 20 NL 0.1μ S/cm MS	±1% FS	—	—
HCW Process Line	Conductivity	Process Line	Local Panel	Radwaste Control Room	0 to 200 NL 0.1μ S/cm MS	±1% FS	—	—
Additional sample lines are in the footnote †								
FS = Full Scale Range		MS = Midscale		NL = Nonlinear				

* The following sampling lines are provided which do not have any instruments, grab sampling only: control rod drive system main stream, high pressure drains, gland steam evaporator drain, TCW heat exchanger outlet, standby liquid control tank, HECW (3), HNCW, LCW sump, HCW sump, HWH, condensate filter outlet (4), condensate demineralizer outlet (6), RCW (12) and all tanks and major process streams in the liquid radwaste system. Sampling for the Offgas System is discussed in Section 11.3.

† Sample location downstream of oxygen injection point.

‡ ppb = Parts per billion

ƒ ppm = Parts per million

** One of the two CUW sampling lines (high temp.) takes the sample before the CUW heat exchangers, and the other (low temp.) takes the sample after the CUW heat exchangers.

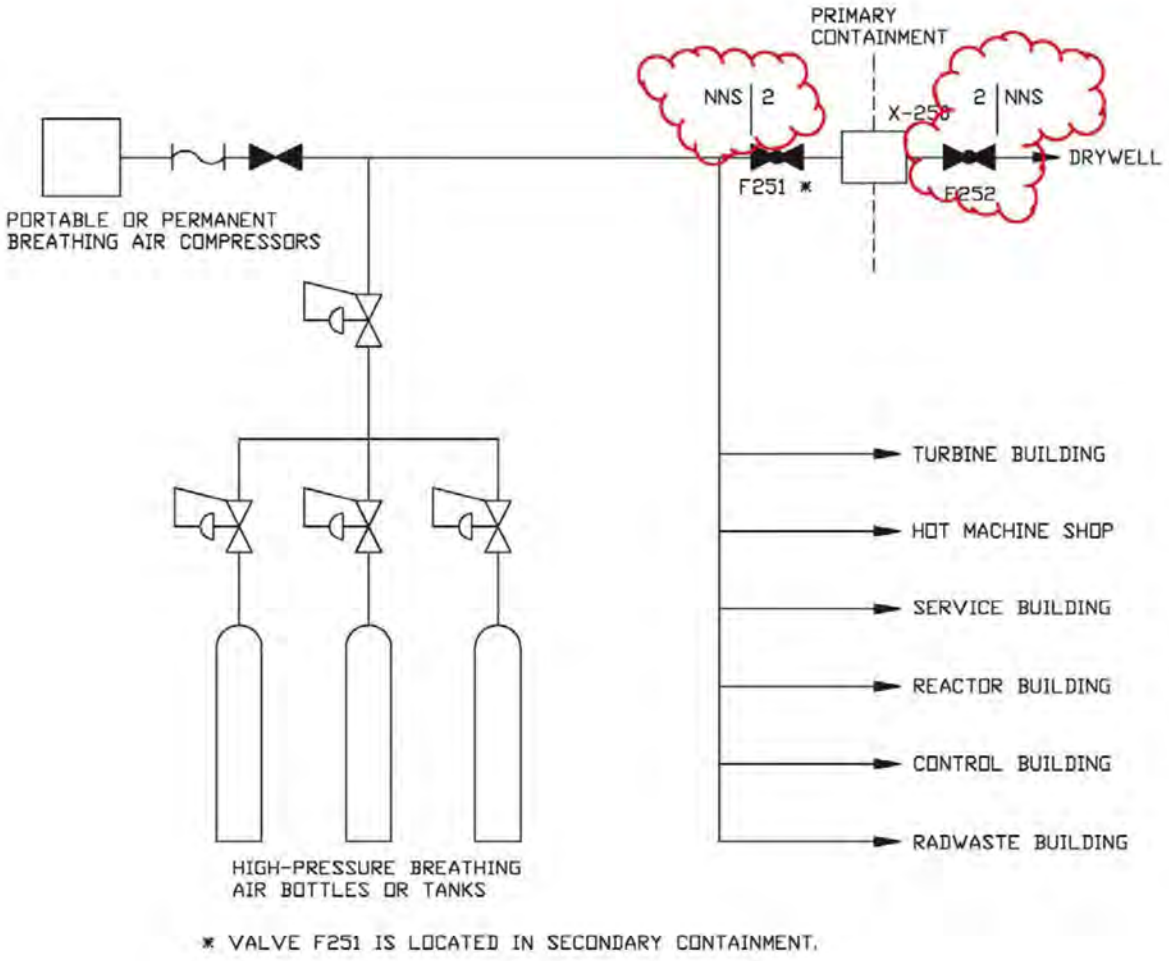

Figure 9.3-10 Breathing Air System Flow Diagram

The following figures are located in Chapter 21:

- **Figure 9.3-11 Radioactive Drain Transfer System P&ID (Sheets 1-22)**

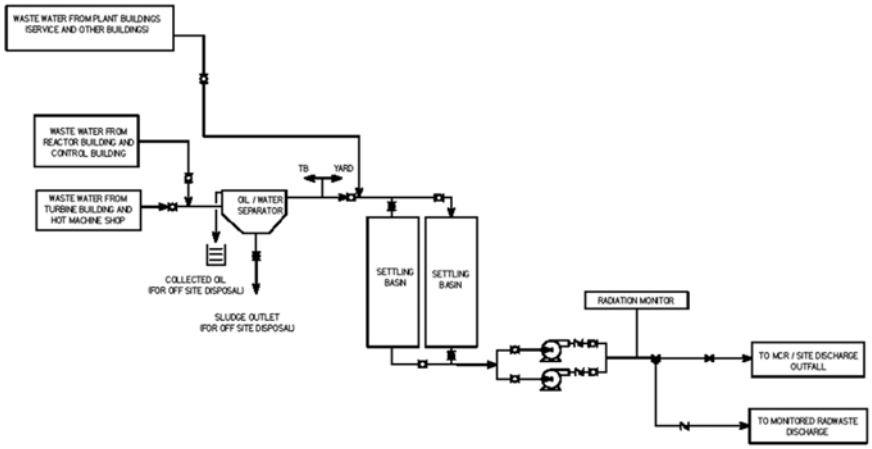

Figure 9.3-12 Non-Radioactive Drainage System

9.4 Air Conditioning, Heating, Cooling and Ventilating Systems

The information in this section of the reference ABWR DCD, including all subsections, tables, and figures is incorporated by reference with the following departures and supplements.

STD DEP T1 2.14-1 (Table 9.4.4e, Figure 9.4-3)

STP DEP T1 5.0-1

STD DEP T1 2.15-2

STP DEP 9.4-1

STD DEP 9.4-2 (Figure 9.4-1, Sheets 1 through 5)

STP DEP 9.4-3

STD DEP 9.4-4 (Tables 9.4-3, 9.4-5, 9.4-5a, 9.4-5b, 9.4-5c, and 9.4-5d), (Figures 9.4-2a, 9.4-2b Sheet 2, and 9.4-2c)

STD DEP 9.4-5 (Figure 9.4-10, Sheets 1, 2, and 3)

STD DEP 9.4-6 (Figure 9.4-1, Sheets 1 and 2)

STD DEP 9.2-7 (Table 9.4-1)

STD DEP 9.2-9 (Table 9.4-1)

STD DEP 9.4-7 (Table 9.4-4i, Figure 9.4-3 Sheet 2)

STP DEP 9.4-8 (Table 9.4-4f, Figure 9.4-1 Sheets 1 through 5, Figure 9.4-3 Sheet 1, Figure 9.4-4 Sheets 1 through 3)

STD DEP 9.4-9 (Table 9.4-5c), (Figures 9.4-2a, 9.4-2b, Sheet 1 & Sheet 2)

9.4.1 Control Building HVAC

9.4.1.1.4 Safety Evaluation

STD DEP 9.4-2

Upon detection of smoke in the CRHA, the operating division of the HVAC System is put into smoke removal mode by the main control room operators. For smoke removal, both exhaust fans are started at high speed in conjunction with a supply fan.~~, the~~ The recirculation damper is closed and the damper in the bypass duct around the ACU is opened*. Either division of the CRHA HVAC System can be used as a smoke removal system.*

9.4.1.1.6 Instrumentation Application

STD DEP 9.4-6

Differential pressure indicators show the pressure drop across the prefilters and the HEPA filters. The switch causes an alarm to be actuated if the pressure drop exceeds a preset limit.

One ~~*A*~~ *flow switch* located at each fan discharge duct *in the emergency filtration* ~~*system*~~ unit ~~*fan discharge duct*~~ *automatically starts the standby* ~~*system*~~ fan in the same division *and initiates an alarm on low flow or operating fan failure.* On detection of low flow by both flow switches in an emergency filtration unit, the emergency filtration unit fan, and the air conditioning unit in the redundant division are started and alarm is initiated.

9.4.1.2.3.3 Safety-Related Subsystem Division C

STD DEP 9.4-7

Subsystem Division 3 specifically serves:

(1) Safety-related battery Division III

(2) HECW chiller Division C

(3) RCW water pump and heat exchanger Division C

(4) HVAC equipment Division C

(5) Safety-related electrical equipment Division III

~~*(6) Non-safety-related MG sets*~~

9.4.1.2.6 Instrumentation Application

STD DEP 9.4-2

On a smoke alarm in a division of the Control Building safety-related electrical equipment area HVAC System, that division of the HVAC System shall be put into smoke removal mode. No other division is affected by this action. For smoke removal, the recirculation duct damper is closed, the damper in the bypass duct around the ACU is opened*, and both exhaust fans are started in conjunction with a supply fan. Normal once through ventilation of the battery rooms also removes smoke from the battery rooms.*

9.4.4 Turbine Island HVAC System

STD DEP 9.4-4

The Turbine Island heating, ventilating, and air conditioning system consists of the Turbine Building (T/B) HVAC System and the Turbine Building *Electrical* ~~*Building (E/B)*~~ Equipment Areas (EEA) *HVAC System*.

9.4.4.1 Design Bases

9.4.4.1.1 Safety Design Bases

STD DEP 9.4-4

The T/B HVAC and ~~E/B~~ EEA HVAC Systems do not serve or support any safety function and have no safety design bases.

9.4.4.1.2 Power Generation Design Bases

STP DEP 9.4-4

STD DEP 9.4-9

(1) *The T/B HVAC and ~~E/B~~ EEA HVAC are designed to supply filtered and tempered air to all Turbine Island spaces during all modes of normal plant operation, including plant startup and shutdown. The systems are also designed to maintain inside air temperatures above ~~15°C~~10°C (except OG Holdup Room: 23°C) and below the following upper design limits:*

General Turbine Building areas: 40°C

Condenser compartment: 43°C

Resin tank room: 43°C

Steam tunnel: ~~49~~60°C

Moisture separator compartments: ~~49~~60°C

OG Holdup Room: 31°C

Electrical ~~Building~~ Equipment areas: 40°C

(2) *The ~~E/B~~ EEA HVAC is designed to provide independent supply and exhaust ventilation to the electrical ~~switchgear~~ rooms, combustion turbine generator and electric boiler rooms, chillers and air compressor rooms, and independent exhaust for the combustion turbine generator and ~~auxiliary~~ electric boiler rooms. The ventilation exhaust for these areas is discharged directly to the atmosphere. Recirculation from clean areas is provided.*

(3) *The T/B HVAC is designed to direct airflow from areas of low potential radioactivity to areas of high potential radioactivity. ~~The T/B HVAC design is based on supplying air from the Turbine Building periphery (outer walls) both above and below the operating floor and ventilating areas radially inwards towards the return/exhaust air inlet points located below the operating floor in equipment rooms, the condenser area and under the building roof.~~ The main*

stairwells that are designed for personnel evacuation routes are pressurized to prevent infiltration of smoke from other Turbine Building areas, during a fire.

(6) Exhaust air from other (low potential airborne concentrations) Turbine Building areas and component vents, except lube oil areas, is ~~either~~exhausted to the atmosphere through a medium efficiency filter.~~, or is returned to the supply air unit and mixed with outside air.~~

9.4.4.2.1 T/B HVAC General Description

STD DEP 9.4-4

STD DEP 9.4-9

The T/B HVAC airflow diagram is shown on Figure 9.4-2a; the system instruments and controls are illustrated on Figure 9.4-2b; T/B Ventilation System flow rate and *equipment design parameters are listed in ~~Table~~* Tables 9.4.3 and *9.4-5, respectively.*

The Turbine Building supply air units, main exhaust fans, equipment compartment exhaust fans, filters, and control panels are located in the T/B HVAC equipment rooms at elevation 27,800mm/ 38,300mm/ 47,200*~~30,300~~mm~~, and the floor above~~. The lube oil area exhaust fans are located in the vicinity of lube oil reservoir room. Individual unit coolers and unit heaters are located in the areas that they serve.*

Potentially high radioactive concentration exhaust air is filtered and discharged to the atmosphere. Exhaust air from clean and low potential airborne contamination areas is ~~either~~discharged to the atmosphere ~~or recirculated~~.

9.4.4.2.1.1 Turbine Building Supply (TBS) System

STD DEP 9.4-9

*The TBS System consists of (1) outside air intake louvers, (2) return and exhaust air modulating dampers with minimum outside air damper position, (3) low and high efficiency filters, (4) ~~hot water~~*electric *heating coils, (5) chilled water cooling coils, and (6) three 50% capacity supply fans.*

Two out of three fans are normally operated to supply filtered and, if required, temperature adjusted air to all levels of the Turbine Building. The third fan is a standby unit, which starts automatically upon failure of either operating fan. Each supply fan is provided with pneumatically-operated inlet vanes, which maintain a constant airflow rate and pneumatically-operated isolation shutoff dampers.

The TBS System runs with 100% outside air during normal plant operation.~~whenever outside air temperature is moderate enough to contribute to maintaining suitable inside air conditions at the minimum operating cost. The T/B HVAC modulates the return, exhaust and outside air dampers to maximize inside air temperature control by outside air, and minimize the energy used for either cooling by the Chilled Water System or heating by the House Boiler System.~~

~~*On extreme outside air temperature conditions (either high or low), the outside air intake dampers are at their minimum position. Maximum inside air, as available from the building clean and low potential airborne contamination areas only, is recirculated by the T/B HVAC exhaust/return fans to the supply air inlet plenum.*~~

The TBS fans are started by handswitches located on local control panels. The supply fans are interlocked with the T/B HVAC exhaust fans and T/B HVAC compartment exhaust fans to ensure that the exhaust fans are running before a supply fan is started.

The TBS air heating and cooling coil performance is controlled by temperature controllers stepping electric power and *modulating* ~~*hot water and*~~*chilled water flow control valves at the coil.*

The TBS fans are started by handswitches located on a local control panel.

9.4.4.2.1.2 Turbine Building Exhaust (TBE) System

STD DEP 9.4-9

The air drawn by TBE fans from the building clean and low potentially contaminated areas is filtered through medium efficiency particulate filters (bag type) and ~~*either*~~*exhausted through the monitored plant stack*~~*or returned to the T/B HVAC supply plenum and mixed with outside air*~~*.*

9.4.4.2.1.3 Turbine Building Equipment Compartment Exhaust (TBCE) System

The TBCE System consists of two 100% capacity exhaust fans, one common medium efficiency particulate *filter* (bag type) *unit and associated controls. One fan is normally in operation, and the other fan is on automatic standby. The system also includes a 100% capacity filter bypass duct for purging smoke in case of fire.*

Except when smoke removal is required, air is exhausted from the potentially high airborne concentration compartments and equipment vents, filtered through a medium efficiency particulate *filter (bag type) before it is released to the atmosphere through the plant stack.*

9.4.4.2.1.5 T/B HVAC Unit Coolers and Electric Unit Heaters

STD DEP 9.4-4

Local unit coolers and electric unit heaters are provided as required in the ~~*following areas: condenser compartment level 2 and 3, condensate pump room, heater drain/pump rooms, filter valve room, demineralizer pump and valve room, TCW heat exchanger area, condensate control station, reactor feed pump power supply room, demineralizer room and filter maintenance area, TCW pump area, SJAE and recombiner rooms, upper level above the turbine operating floor.*~~ high heat load areas.

9.4.4.2.2 ~~E/B~~ EEA HVAC General Description

STD DEP 9.4-4

The ~~E/B~~ EEA HVAC schematic diagram is shown on Figure 9.4-2c.

9.4.4.2.2.1 Electrical ~~Building~~ Equipment Areas HVAC System

STD DEP 9.4-4

STD DEP 9.4-9

The Electrical ~~Building~~ Equipment area HVAC System is provided with two 100% capacity air supply fans and two 100% capacity exhaust fans.

The air supply fan draws outside air through louvers, control dampers, low efficiency filters, electrical heating coils, and chilled water coils, and discharges air directly into the ~~switchgear~~ electrical rooms, chiller, combustion turbine generator, ~~house~~ electric boiler room and air compressor rooms. Return air ~~Ductwork~~ ductwork ~~and bypass dampers are~~ is provided to allow recirculation of air from the ~~switchgear~~ electrical rooms and ~~chiller rooms~~ air compressor room.

The ~~E/B~~ EEA HVAC system maintains the Electrical ~~Building~~ Equipment Areas at a positive pressure with respect to atmosphere.

9.4.4.2.2.2 ~~E/B~~ EEA HVAC Unit Coolers and Electric Unit Heaters

STD DEP 9.4-4

Local unit coolers and/or electric unit heaters are provided as required in the ~~chiller, air compressor and combustion turbine generator rooms~~high heat load areas. The unit coolers are supplied with chilled water from the Chilled Water System.

9.4.4.3 Evaluation

STD DEP 9.4-4

The TBS and ~~E/B~~ EEA HVAC have no safety design bases and serve no safety function.

Evaluation of the T/B HVAC and ~~E/B~~ EEA HVAC with respect to fire protection is discussed in Subsection 9.5.1.

9.4.4.5 Instrumentation Application

STD DEP 9.4-4

All control actuations, indicators, and alarms for normal plant operation are located in local control panels in the T/B HVAC and ~~E/B~~ EEA HVAC equipment areas.

Controls and instrumentation for the T/B HVAC and ~~E/B~~ EEA HVAC include:

9.4.5 Reactor Building HVAC System

STD DEP T1 2.14-1

STD DEP T1 2.15-2

9.4.5.1.1.2 Power Generation Design Bases

STP DEP 9.4-8

The Secondary Containment HVAC System is designed to provide an environment with controlled temperature and airflow patterns to insure both the comfort and safety of plant personnel and the integrity of equipment and components.

A negative pressure of 6.4mm water gauge is normally maintained in the secondary containment relative to the outside atmosphere.

The system design is based on outdoor summer conditions of ~~46~~32.8°C and outdoor winter conditions of ~~–40~~2.1°C.

9.4.5.2 R/B Safety-Related Equipment HVAC System

9.4.5.2.2 System Description

The R/B Safety-Related Equipment HVAC System consists of 12 safety-related fan coil units (FCU) of division A, B, or C. Each FCU has the responsibility to cool one safety-related equipment room in the secondary containment. The safety-related equipment HVAC (fan coil units) system P&ID is shown in Figure 9.4-3. Space temperatures are maintained less than 40°C normally and less than 66°C during pump operation:

(1) RHR(A) pump room

(2) RHR(B) pump room

(3) RHR(C) pump room

(4) HPCF(B) pump room

(5) HPCF(C) pump room

(6) RCIC pump room

(7) ~~FCS (B) room~~ Not Used

(8) ~~FCS (C) room~~ Not Used

(9) SGTS(B) room

(10) SGTS(C) room

(11) CAMS(A) room

(12) CAMS(B) room

9.4.5.2.2.2 Not Used

~~*Cooling of the FCS rooms are automatically initiated upon receipt of a secondary containment isolation signal or a manual FCS start signal.*~~

~~*These rooms are cooled by the Secondary Containment HVAC System during normal conditions. The units are open ended and recirculate cooling air within the space served. Space heat is removed by cooling water passing through the coil section. Divisional RCW is used as the cooling medium. The units are fed from the same divisional power as that for the FCS being served. Humidity is not specifically maintained at a set range, but is automatically determined by the surface temperature of the cooling coil. Drain pan discharge (condensate) is routed to a floor drain located within the room.*~~

9.4.5.4.1.2 Power Generation Design Bases

STD DEP T1 2.15-2

The system design is based on outdoor summer conditions of 46.1°C and outdoor winter conditions of –40°C. The indoor design temperature in the safety-related electrical equipment areas is 40°C maximum in the summer and a minimum of 10°C in the winter except ~~50~~60°C in the diesel generator (DG) engine rooms during DG operation. The system along with the DG supply fan maintain DG room temperature below ~~50~~60°C.

9.4.5.5.2 System Description

STP DEP 9.4-8

The R/B Safety-Related Diesel Generated HVAC System for each of three diesel generator divisions consists of a filter and two supply fans and associated ductwork. They both take air from the outside through a tornado damper ~~and a fire damper~~ and distribute it to the diesel generator room. The exhaust air is forced out the exhaust louvers and a tornado damper.

9.4.5.5.5 Instrumentation Application

STD DEP T1 2.15-2

The safety-related D/G HVAC System together with R/B Safety-related Electrical Equipment HVAC System maintain DG engine room temperature below ~~50~~60°C.

9.4.6 Radwaste Building HVAC Systems

STD DEP 9.4-5

STP DEP T1 5.0-1

9.4.6.1 Design Bases

9.4.6.1.2 Power Generation Design Bases

STD DEP 9.4-5

The Radwaste Building HVAC System is designed to provide an environment with controlled temperature and airflow patterns to insure both the comfort and safety of plant personnel and the integrity of equipment and components. The Radwaste Building is divided into ~~two~~ three *zones for air conditioning and ventilation purposes. These zones are the* clean *radwaste control room*; the clean electrical equipment room, HVAC equipment room, air filtration equipment room, elevator machine room, and Radwaste Building entrance; *and the balance of the Radwaste Building* which has the potential for airborne radioactive contamination.

A positive static pressure with respect to the balance of the building and to the atmosphere is maintained in the radwaste control room, the electrical equipment room, HVAC equipment room, air filtration equipment room, elevator machine room, and Radwaste Building entrance. *The balance of the Radwaste Building is maintained at a negative static pressure with respect to the atmosphere* and adjacent clean areas.

STP DEP T1 5.0-1

The system design is based on ~~an outdoor summer maximum of 46°C. Summer indoor temperatures include 24°C in the radwaste control room, 32°C in operating areas and corridors, a maximum temperature of 40°C in areas that may be occupied and 43°C in the equipment cells. Winter indoor design temperatures include 16°C in occupied areas, 21°C in the radwaste control room and 16°C in the equipment cells, based on an outdoor design temperature of 40°C.~~ the following 1% exceedance site temperatures:

- Summer design conditions, 32.8°C. (91°F) dry bulb and 26.3°C. (79.3°F) wet bulb (coincident).
- Winter design condition, 2.1°C. (35.8°F).

STD DEP 9.4-5

The system is designed to:

- Maintain indoor design condition of 24°C (75°F) and RH 55% or less in the radwaste control room throughout the year at the outdoor design conditions specified above.
- Maintain indoor design temperature range between maximum of 32°C (90°F) and minimum of 15°C (59°F) in the electrical and HVAC equipment rooms throughout the year at the outdoor design conditions specified above.

- Maintain indoor design temperature range between maximum of 40°C (104°F) and minimum of 15°C (59°F) in the radwaste process areas throughout the year at the outdoor design conditions specified above.
- Limit airborne fission product release to the atmosphere from the ventilation system exhaust during normal plant operation.
- Limit concentration of airborne radioactivity to levels below the allowable values set by Appendix B of 10CFR20.
- Provide accessibility for adjustment and periodic inspection and testing of the system equipment and components to ensure continuous functional reliability.
- Provide sufficient back-up equipment and components to ensure continuous reliable performance during normal plant operation.
- Air filtration system equipment housing and ductwork design, construction, and testing shall be in compliance with requirements of ASME AG-1.

9.4.6.2 System Description

The following site-specific supplement addresses COL License Information Item 9.17.

The Radwaste Building HVAC System P&ID is shown in Figure 9.4.10, sheets 1, 2, and 3 located in Chapter 21. Equipment flow rate data and performance are listed in Table 9.4-6a through Table 9.4-6m. Compliance with RG 1.140 is included in the following relevant subsections.

9.4.6.2.1 Radwaste Building Control Room

STD DEP 9.4-5

Heating, cooling, and pressurization of the control room are accomplished by ~~*an air-conditioning system. The air-conditioning system is a unit air-conditioner consisting of a water-cooled condenser, compressor, cooling coil, heating coil, filters and fan. Outdoor air and recirculating air are mixed and drawn through a prefilter, a high-efficiency filter, a heating coil, a cooling coil, and two 100% supply fans. One fan is normally operating and the other fan is on standby. A pressure differential controller regulates the exfiltration from the control room to maintain it at a positive static pressure, preventing airborne radioactive contamination from entering.*~~ two redundant 100% capacity air conditioning units served by a common air distribution system. Each air conditioning unit is a factory-assembled unit consisting of, in the direction of airflow, a return/outside air plenum, a pre-filter bank, a high efficiency filter bank, an electric heating coil, a chilled water coil, a supply air fan, and an isolation damper. Chilled water for the cooling coil is supplied from the HVAC normal cooling water system. *No separate exhaust fan system is required.*

The Radwaste Control Room HVAC Smoke Removal System consists of one 100% fan. This fan is operated manually. Smoke from the control room is released directly to the atmosphere. Make up for smoke removal is provided by the active air handling unit

after its dampers have been automatically aligned for 100% outdoor air. During smoke removal operation the cooling coil valve automatically reverts to full flow to prevent coil freezing during the cold season.

An area radiation monitor is provided in the radwaste control room and will alarm on high radiation to alert personnel in the area.

One of the air conditioning units is manually placed in operation and runs continuously on a return airflow of approximately 80% of the total supply air to the room. Approximately 20% of the total supply air to the room is drawn by the unit from the outdoor air to be mixed with the return air and delivered to provide ventilation and control room pressurization.

Upon detection of smoke in the supply or return air ducts, the system shuts down and an alarm sounds in the radwaste and main control room.

9.4.6.2.2 Radwaste Building Process Area HVAC System and Electrical and HVAC Equipment Rooms Ventilation System

The Radwaste Building Process Area HVAC System is a once-through type. Outdoor air is filtered, tempered, and delivered to the non-contaminated areas of the building. The supply air system consists of outdoor air intake*, a prefilter, a high efficiency filter, heating coil, cooling coil, and two 100%* capacity *supply fans. One fan is normally operating and the other fan is on standby. The supply fan furnishes conditioned air through ductwork and diffusers, or registers to* the non-contaminated and *work areas of the building. Electric unit heaters are provided in the trailer bays, the sorting table area,* and other areas of the building with significant heat loss. *Air from the work* and non-contaminated *areas is exhausted through the tank and pump rooms* and other contaminated areas*. Thus, the overall airflow pattern is from the least potentially contaminated areas to the most contaminated areas.* Supply airflow temperature, in an inverse proportion, is controlled by a space temperature controller to maintain the space temperature within the design range through the modulation in sequence of the air handling unit, chilled water cooling coil valve and the silicon controlled rectifier (SCR) controller of the air tempering electric coil. *The exhaust air system consists of three 50% exhaust fans, two normally operating and one on standby.* ~~*Exhaust*~~ Monitored *exhaust air from the Radwaste Building is* normally routed through a bypass to the plant stack. Upon radiation detection in the main exhaust duct, the exhaust air is automatically realigned and *filtered through a prefilter and a high efficiency* particulate air (HEPA) *filter before* ~~*release*~~ *discharge* to *the plant stack*. A radiation monitor downstream of the HEPA filter monitors the discharge airflow and upon detection of high levels of radioactivity, activates an alarm in the Radwaste Control Room and the Main Control Room, and shuts down and isolates the system.~~*, and it is monitored for airborne radioactivity. A high level of radioactivity activates an alarm in the main control room, simultaneously isolating the process area. The exhaust air is monitored before it is released to the main plant stack.*~~ Smoke removal is accomplished by the exhaust air fans by-passing the air-filtration equipment. Make up air for smoke removal is provided by the air handling unit. During smoke removal

operation the cooling coil valve automatically reverts to full flow to prevent freezing during the cold season.

The electrical equipment room, HVAC equipment room, air filtration equipment room, elevator machine room, and Radwaste Building entrance heating, cooling, and pressurization is accomplished by an air conditioning unit with two redundant 100% capacity supply air fans. Supply air is distributed by an overhead air distribution system. The air conditioning unit is a factory-assembled unit consisting of, in the direction of airflow, a return/outside air plenum, pre-filter bank, high efficiency filter bank, chilled water coil, two redundant supply air fans, and isolation dampers. Chilled water for the cooling coil is supplied from the HVAC Normal Cooling Water System. Return air from the electrical equipment room, the HVAC equipment rooms, elevator machine room, and the building entrance is ducted back to the air conditioning unit by one of the two 100% capacity redundant return air fans. Air supplied to the air filtration equipment room is exhausted by the filtered exhaust air system of the Process Area HVAC System.

The air conditioning unit is manually placed in operation and runs continuously with one supply fan activated and with a minimum outdoor air supply of approximately 20% of the total supply air for pressurization. The return airflow of approximately 80% of the total supply air to the room is drawn by the activated return air fan and delivered back to the air conditioning unit.

Smoke removal is accomplished by one of the return air fans, which is operated manually. Exhausted smoke is discharged directly to the outdoors. Makeup air for smoke removal is provided by the air handling unit after its dampers have been automatically aligned for 100% outdoor air. During smoke removal operation the cooling coil valve automatically reverts to full flow to prevent coil freezing during the cold season.

9.4.6.3 Safety Evaluation

Although the HVAC ~~System is~~ systems are *not safety-related as defined in Section 3.2, several features are provided to ensure safe operation. ~~A c~~*C*ompletely separate HVAC ~~System is~~* systems are *provided for the radwaste control room* and the electrical equipment room, HVAC equipment room, air filtration equipment room, elevator machine room, and Radwaste Building entrance. *Pressure control fans for radwaste areas are redundant, with provision for automatic start of the standby unit. Area and process exhaust radiation detectors and isolation dampers are provided to permit isolation of ~~the radwaste process areas~~* the redundant equipment. Duct penetrations and transfer air opening in equipment and tank rooms, with radiation shielding, are carefully configured for radiation shine geometry to prevent impingement of direct radiation on personnel. The exhaust system air filtration equipment is in compliance with Regulatory Guide 1.140.

When high radiation is detected downstream of the air-filtration equipment, the operator should shutdown the system as a precaution. The source of the high radioactivity should be identified and corrective action should be taken prior to restart of the system.

9.4.6.4 Tests and Inspections

The system is designed to permit periodic inspection of important components, such as fans, motors, belts, coils, filters, ductwork, piping and valves, to ensure the integrity and capability of the system. Local display and/or indicating devices are provided for periodic inspection of vital parameters such as room temperature, and test connections are provided in exhaust filter trains and piping for periodic checking of air and water ~~Air Conditioning, Heating, Cooling and Ventilating Systems 9.4-33~~ flows for conformance to the design requirements. All major components are tested and inspected as separate components prior to installation to ensure design performance. The system is pre-operationally tested in accordance with the requirements of Chapter 14. The system air filtration units are tested in place for casing leakage, in place aerosol leak test for HEPA filters frame or bypass leakage in accordance with ASME N510. HEPA combined penetration and bypass leakage limitations are in compliance with Regulatory Guide 1.140. Ductwork, isolation dampers, and connections associated with air filtration systems are tested in accordance with ASME AG-1.

9.4.6.5 Instrumentation Application

9.4.6.5.1 Radwaste Building Control Room HVAC

The air conditioning unit for the radwaste control room HVAC is started manually. A temperature indicating controller modulates the air conditioning system via chilled water cooling coil *valve and an electric heating coil* SCR to *maintain space conditions. A differential pressure indicating controller modulates ~~inlet vanes in the supply fan air inlets~~* outdoor and return air dampers *to maintain the positive static room pressure. Differential pressure indicators measure the pressure drop across the filter bank* and provide an alarm when the filter is due for replacement. Detection of smoke in the supply or the return air duct will sound an alarm and automatically shut down the activated unit. Furthermore, alarms shall be generated upon airflow failure, high supply air temperature, radiation detection, and lack of space pressure differential.

9.4.6.5.2 Radwaste Building Process Area HVAC

The information in this section of the reference ABWR DCD is incorporated by reference with the following supplement.

The air exhaust and supply fans for the Radwaste Building Process Area HVAC are started manually. The fan ~~inlet~~ isolation *dampers open when the fan is started. A flow switch installed in the exhaust* and supply *fan discharge duct activates an alarm on indication of fan failure in the main and radwaste control rooms and automatically starts the standby fan. The exhaust ~~fan is~~* fans *are interlocked with ~~supply fan~~* the air handling unit supply fans *~~to prevent the supply fan from operating if the exhaust fan is shut down~~* so that the operation of two exhaust fans is a prerequisite to starting the supply air fans. Local heating shall be provided by electric unit heaters provided with integral controls. *~~Two~~* Command signals from multiple *pressure-indicating controllers modulate variable inlet vanes ~~in the supply fan~~* of the activated exhaust air fans *to maintain the area at a negative static pressure with respect to the atmosphere* and the adjacent clean areas in the building. Upon negative static pressure rise after the activated exhaust fans have

reached maximum flow, the variable inlet vanes on the activated supply air fans modulate to reduce supply airflow to the radwaste process areas. ~~*The switch causes an*~~ An *alarm* ~~*to be*~~ is *activated if the negative pressure* ~~*falls below*~~ rises above *the preset limit. Differential pressure indicators measure the pressure drop across the filter section*~~*. The switch*~~ and *causes an alarm to be activated if the pressure drop exceeds the preset limit.*

~~*Radiation monitors are installed in the radwaste process area exhaust duct to the main plant stack. A high radiation signal in the duct causes alarms to annunciate in the main control room and the radwaste control room. If the radwaste process area exhaust radiation alarm continues to annunciate, the work area branch ducts are manually isolated selectively to locate the affected building area. Should this technique fail, because the airborne radiation has generally spread throughout the building, control room air conditioning continues operating. However, the air conditioning for the balance of the building is shut down. The operators, using approved plant health physics procedures, then enter the work areas to locate and isolate the leakage source. The supply and exhaust air ductwork have manual balancing dampers provided in the branch ducts for balancing purposes. The dampers are locked in place after the system is balanced.*~~ Upon detection of smoke in the supply or exhaust air ducts, the system shuts down and an alarm sounds in the radwaste and main control room. The system shall be provided with airflow and differential pressure monitoring and recording. Furthermore, alarms shall be generated upon airflow failure of the activated supply and exhaust fans, high and low supply air temperature, radiation detection in the exhaust air ducts, high differential pressure across the filter banks, and lack of space sub atmospheric pressure.

9.4.6.5.3 ~~*Incinerator Exhaust Stack*~~ Not Used

~~*Radiation monitors are installed in the incinerator exhaust stack. A high radiation signal in the stack causes alarms to annunciate in the main control room and the radwaste control room. See Subsection 11.5.2.2.11 and Table 11.5-2.*~~

9.4.6.5.4 Electrical Equipment Room, HVAC Equipment Room, Air Filtration Equipment Room, Elevator Machine Room, and Radwaste Building Entrance HVAC

STD DEP 9.4-5

The air conditioning unit for the electrical and HVAC equipment rooms, air filtration room, elevator machine room, and building entrance is started manually. One of the two 100% capacity supply fans is activated and run continuously. Differential flow switch across the fan will alarm in the control room upon airflow failure and initiate the operation of the standby supply fan. A temperature-indicating controller modulates, in sequence, the outdoor air, the return air, and the relief air dampers of the air conditioning unit for free cooling using outdoor air. Upon further room temperature rise the unit dampers revert to minimum outdoor airflow and modulate, in sequence, the chilled water cooling coil valves. Heating is provided either by electric unit heaters with integral control or by heating coil with SCR to maintain space conditions. A differential pressure indicating controller overrides temperature control and modulates outdoor

and return air dampers to maintain the positive static pressure in the served areas. Differential pressure indicators measure the pressure drop across the filter bank and provide an alarm when the filter is due for replacement. Detection of smoke in the supply or the return air duct will sound an alarm and automatically shutdown the activated unit. Furthermore, alarms are generated upon airflow failure of the activated supply and return air fans; high and low supply air temperature, and lack of space sub atmospheric pressure.

9.4.8 Service Building HVAC System

STP DEP 9.4-1

STP DEP 9.4-3

The Service Building HVAC System supplies air to ~~*consists of two subsystems;*~~ *the Clean Area* ~~*HVAC System*~~ *and the Controlled Area* ~~*HVAC System*~~*.*

9.4.8.1.2 Power Generation Design Bases

STP DEP 9.4-3

(1) The Service Building ~~*Clean Area*~~ *HVAC System is designed to maintain a quality environment suitable for personnel health and safety in the Service Building. It is designed to limit the maximum temperature in the Service Building to 29°C. The temperature in each area conforms to the equipment requirements in that area.*

(2) The Service Building ~~*Clean Area*~~ *HVAC System provides a quantity of filtered outdoor air to purge any possible contamination.*

(3) ~~*Both the Clean Area HVAC System and the Controlled Area HVAC System operate manually and*~~ The Service Building HVAC System is started manually and operates *continuously. Isolation dampers at each supply fan, each exhaust fan, and each filter package close when the respective equipment is not operating. There is an additional isolation damper at the supply air inlet which closes when the supply air system is not operating. An automatic damper in the supply system ductwork regulates the flow of air to maintain the Service Building clean areas at a positive pressure with respect to the atmosphere.*

(4) In the event of a loss of offsite electric power, the Service Building HVAC System is shut down. The combustion turbine generator (CTG) backed power is available for manual loading by the operator to start the Service Building HVAC System.

(5) The clean areas served by the Service Building ~~*clean area*~~ *HVAC System has an emergency filter train. It is* automatically or *manually operated. In an emergency it supplies filtered air for the TSC, OSC, lunch room, offices, health physics lab, security offices, and other normally clean areas.*

9.4.8.2 System Description

STP DEP 9.4-3

(1) The Service Building ~~*Clean Area*~~ *HVAC System supplies filtered, heated or cooled air to both the clean and controlled areas through a central fan system consisting of an outside air intake, Air Conditioning Unit consisting of filters, heating coils, cooling coils, two 50% capacity supply air fans and supply air ductwork.*

(2) Two 50% capacity exhaust air fans serve the ~~*The*~~ *Clean Area* ~~*HVAC System has two 50% capacity exhaust air fans.*~~ *They take air from the clean areas through the exhaust ducts and discharge the air on the Service Building roof.*

(3) Two 50% capacity exhaust air fans serve the ~~*The*~~ *Controlled Area*. ~~*HVAC System routes*~~ They route *potentially contaminated air* ~~*to two 50% capacity exhaust air fans to*~~ from the controlled areas and *discharge the air to the common plant stack*.

(6) The Service Building ~~*clean area*~~ *HVAC System is provided with an emergency filter train consisting of a heater/demister, prefilter, HEPA filter,* ~~*5.1*~~10.2 *cm charcoal filter bed, a second HEPA filter, and two fans.*

(7) Controls and Instrumentation

STP DEP 9.4-1

STP DEP 9.4-3

(c) Radiation monitors ~~*and provisions for toxic gas monitors*~~ *at the supply air inlet with alarms to TSC* and signal for automatic start of the emergency filter train*.*

STP DEP 9.4-3

(d) On manual or automatic *initiation, the* Service Building ~~*clean area*~~ *HVAC System can be put into high radiation mode. On switch over,* the normal air intake damper closes, the minimum outside air intake damper opens, the *exhaust fans stop and* the ventilation air for the clean area is routed through the *emergency filter train* ~~*starts*~~*. System pressurizes clean areas of the service building.*

9.4.10 COL License Information

9.4.10.1 Service Building HVAC System

The following site-specific supplement addresses COL License Information Item 9.16.

The Service Building HVAC System P&ID is shown in Figure 9.4-11. Flow rates and component capacities are given in Tables 9.4-3, 9.4-4h, 9.4-7a and 9.4-7b. Radiation monitors are provided at the supply air inlet as shown in Figure 9.4-11 and discussed

in Section 9.4.8.2 (7c). As discussed in Subsection 2.2S.3, no hazardous chemicals with quantities exceeding the criteria of Regulatory Guide 1.78 have been identified. Instrumentation to detect and alarm a hazardous chemical release in the STP 3 & 4 vicinity and to isolate the Service Building Clean Area from such releases is not provided.

The Service Building Clean Area emergency filter unit complies with all applicable provisions of Regulatory Guide 1.140, Rev. 2, Section C.

9.4.10.2 Radwaste Building HVAC System

The following site-specific supplement addresses COL License Information Item 9.17.

The detailed equipment lists, system flow rates, and compliance with RG 1.140 for Radwaste Building HVAC System is addressed in Subsection 9.4.6.2.

Table 9.4-1 Drywell Cooling System Non-Safety-Related Components

RCS Cooling Coils	
Number	*3*
Type	*Plate Fin*
Airflow Rate	*1000 m^3/min.*
Cooling Capacity	*1023.42 MJ/h*
Air Temperature (Inlet/Outlet)	*57°C/42°C*
Water Temperature (Inlet/Outlet)	*35°C/40°C*
Water Flow Rate	*13.5 L/s*
HNCW Cooling Coils	
Number	*2*
Type	*Plate Fin*
Air Flow Rate	*277 m^3/min.*
Cooling Capacity	*791.31 MJ/h*
Air Temperature (Inlet/Outlet)	*44°C/*12°C
Water Temperature (Inlet/Outlet)	*7°C/~~12°C~~*14.7°C
Water Flow Rate	*~~10.5 L/s~~*6.8 L/s
Fans	
Number	*3*
Type	*Centrifugal*
Capacity	*1000 m3/min.*
Head	*1.47E+03 Pa*

Table 9.4-3 HVAC Flow Rates ~~(Response to Question 430.243)~~

Safety-Related HVAC System	**Flow Rates (m^3/h)**
R/B Electrical HVAC Division A	30,000
R/B Electrical HVAC Division B	30,000
R/B Electrical HVAC Division C	30,000
DG HVAC Division A	160,000
DG HVAC Division B	160,000
DG HVAC Division C	160,000
C/B Electrical HVAC Division A	35,000
C/B Electrical HVAC Division B	35,000
C/B Electrical HVAC Division C	35,000
CRHA HVAC Division B	80,000
CRHA HVAC Division C	80,000
Non-Safety-Related HVAC Systems	**Flow Rates (m^3/h)**
R/B Secondary Containment HVAC	168,500
T/B ~~*Ventilation*~~ HVAC System	~~*341,500*~~ **385,500**
T/B EEA HVAC System	**245,200**
RIP ASD HVAC Division A	50,000
RIP ASD HVAC Division B	50,000
Service Building Emergency Filtration Unit	**5,300**
Service Building Air Conditioning Unit	**55,200**

Table 9.4-4e HVAC System Component Descriptions — Safety-Related Fan Coil Units (Response to Question 430.243)

Safety-Related Fan Coil Units	Capacity (MJ/h)
HPCF Pump Room Div B	*460.55*
HPCF Pump Room Div C	*460.55*
RHR Pump Room Div A	*307.73*
RHR Pump Room Div B	*307.73*
RHR Pump Room Div C	*307.73*
~~*FCS Room Div B*~~	~~*54.85*~~
~~*FCS Room Div C*~~	~~*54.85*~~
RCIC Pump Room Div A	*69.08*
CAMS Room Div A	*83.74*
CAMS Room Div B	*83.74*
SGTS Room Div B	*16.75*
SGTS Room Div C	*16.75*

Table 9.4-4f HVAC System Component Descriptions-Non-Safety-Related Heating Cooling Coils (Response to Question 430.243)

Heating /Cooling Coils	Quantity	Cooling (MJ/h	Heating (MJ/h)
R/B Secondary Containment HVAC	1 ~~*3(1 on standby)*~~	~~*6435.95*~~ 4848.48	~~*9601.17*~~ 3251.52
RIP ASD HVAC Division A	*1*	*2110.15*	
RIP ASD HVAC Division B	*1*	*2110.15*	

Table 9.4-4h HVAC System Component Descriptions—Non-Safety-Related Filters
~~***(Response to Question 430.243)***~~

Filters	Quantity	Capacity (m^3/h)
R/B Secondary Containment HVAC	3 (1 on standby)	86,250
R/B Primary Containment Intake HEPA Filter	1	22,000
R/B Secondary Containment Exhaust Fans	3	57,500 (each)
Service Building Air Conditioning Unit	**1**	**55,200**
Service Building Emergency Filtration Unit	**1**	**5,300**

Table 9.4-4i HVAC System Component Descriptions—Non-Safety-Related Air Handling Units (Response to Question 430.243) *

Non–Safety-Related Air Handling Units	Quantity	Capacity (MJ/h)
Main Steam Tunnel	2	628.02
Refueling Machine Control Room	1	83.74
ISI Room	1	54.43
MG Set Room	2	~~1047.96~~321.84
C/B Non-Safety-Related Electric Room	1	211.01
R/B FPC Room	2	28.47
CRD Control Room	1	18.42
SPCU Pump Room	1	42.29

** The COL applicant shall supply equipment lists for the Service Building HVAC and the Radwaste Building HVAC system. See Subsection 9.4.10.1 for the Service Building, and 9.4.10.2 for the Radwaste Building.*

~~Table 9.4-5 Turbine Building *and Electrical Building* HVAC System – Non Safety Related Equipment~~ ~~*~~

~~Item~~	~~Turbine Building Air Supply~~ ~~*TRV* TBV-F-1A thru C~~	~~T/B Clean Area Return/Exhaust~~ ~~TBV-F-2A thru C~~	~~T/B Equipment Compartment Exhaust~~ ~~TBV-F-24A & -24B~~	~~T/B Lube Oil Exhaust~~ ~~TBV-F-4A & B~~	~~Condensate Pump Room Recirc. Unit~~ ~~TBV-F-8A thru C~~
~~Type~~	~~Builtup unit~~	~~Central station air handler~~	~~Builtup unit~~	~~Fan~~	~~Central station air handler~~
~~Number of units~~	~~1~~	~~3~~	~~1~~	~~2~~	~~3-50% each~~
~~Flow rate (m^3/h)~~	~~*341,500* **385,500**~~	~~*168,000* **189,900**/unit~~	~~272,000~~	~~12,600~~	~~51,000**/unit**~~
~~Fan:~~					
~~Type~~	~~Centrifugal~~	~~Centrifugal~~	~~Centrifugal~~	~~Centrifugal~~	~~Centrifugal~~
~~No. of fans per unit~~	~~3~~	~~1~~	~~2~~	~~1~~	~~1~~
~~No. of running fans~~	~~2~~	~~2~~	~~1~~	~~1~~	~~2~~
~~Heating coils:~~		~~None~~		~~None~~	~~None~~
~~No. of banks per unit~~	~~1~~	~~—~~	~~*1* **None**~~		~~—~~
~~Capacity, each (MJ/h)~~	~~*11,605.81* **13,133**~~	~~—~~	~~*369.28* **None**~~		~~—~~
~~Cooling coils:~~		~~None~~	~~None~~	~~None~~	
~~No. of banks per unit~~	~~6~~	~~—~~	~~—~~	~~—~~	
~~Capacity, each (MJ/h)~~	~~*1582.61* **1788**~~	~~—~~	~~—~~	~~—~~	~~949.57~~
~~Prefilters:~~		~~None~~	~~None~~	~~None~~	
~~Type~~	~~Glass, roll~~	~~—~~	~~—~~		~~—~~
~~Capacity (m^3/h)~~	~~*341,500* **385,500**~~	~~—~~	~~—~~		~~—~~
~~ASHRAE 52 eff.~~	~~35%~~	~~—~~	~~—~~		~~—~~
~~Filters:~~				~~None~~	
~~Type~~	~~High eff.~~	~~Bag type,~~	~~Bag type,~~	~~—~~	~~*Medium* **High** eff~~
~~Capacity (m^3/h)~~	~~*341,500* **385,500**~~	~~*168,000* **189,900**/unit~~	~~272,000~~	~~—~~	~~51,000**/unit**~~
~~ASHRAE 52 eff.~~	~~85%~~	~~90%~~	~~90%~~	~~—~~	~~85%~~

~~** Response to Question 430.242C.*~~

~~Table 9.4-5a Turbine Building *and Electrical Building* HVAC System – Non-Safety Related Equipment (Continued)~~

~~Item~~	~~Heater Drain/RFP Pump *P1A* Room Recirc. Unit TBV-F-9A thru C~~	~~*Heater Drain* Condensate Booster Pump *P1B* Room Recirc. Unit TBV-F-9D thru F~~	~~Filter Pump *Recirc.* and Valve Room Recirc. Unit TBV-F-10A thru C~~	~~Demineralizer Pump and Valve Room Recirc. Unit TBV-F-12A thru C~~	~~Reactor Feed Pump Power Supply Room Recirc. Unit TBV-F-13A thru C~~
~~Type~~	~~Central station air handler~~	~~Central station air handler~~	~~Central station air handler~~	~~Central station air handler~~	~~Central station air handler~~
~~Number of units~~	~~3-50% each~~	~~3-50% each~~	~~3-50% each~~	~~3-50% **each**~~	~~3-50% **each**~~
~~Flow rate (m^3/h)/unit~~	~~*11,900* **42,400**~~	~~*11,900* **5,100**~~	~~5,200~~	~~*8,700* **18,000**~~	~~1,825~~
~~Fan:~~					
~~Type~~	~~Centrifugal~~	~~Centrifugal~~	~~Centrifugal~~	~~Centrifugal~~	~~Centrifugal~~
~~No. of fans per unit~~	~~1~~	~~1~~	~~1~~	~~1~~	~~1~~
~~No. of running fans~~	~~2~~	~~2~~	~~2~~	~~2~~	~~2~~
~~Heating coils:~~	~~None:~~	~~None:~~	~~None:~~	~~None:~~	~~None~~
~~No. of banks per unit~~	~~—~~	~~—~~	~~—~~	~~—~~	~~—~~
~~Capacity, each (MJ/h)~~	~~—~~	~~—~~	~~—~~	~~—~~	~~—~~
~~Cooling coils:~~					
~~Capacity, each (MJ/h)~~	~~*221.57* **796.0**~~	~~*221.57* **94.50**~~	~~97.13~~	~~335.36~~	~~34.33~~
~~Filters:~~					
~~Type~~	~~*Medium* **High** eff~~	~~*Medium* **High** eff~~	~~*Medium* **High** eff~~	~~*Medium* **High** eff~~	~~*Medium* **High** eff~~
~~Capacity (m^3/h)**/unit**~~	~~*11,900* **42,400**~~	~~*11,900* **5,100**~~	~~5,200~~	~~*8,700* **18,000**~~	~~1,825~~
~~ASHRAE 52 eff.~~	~~85%~~	~~85%~~	~~85%~~	~~85%~~	~~85%~~

~~Table 9.4-5b Turbine Building *and Electrical Building* HVAC System—Non-Safety-Related Equipment (Continued)~~

~~Items~~	~~TCW Heat Exchanger Area Recirculation Unit TBV-F-14A thru C~~	~~Condenser Compt. Room Level 2 Recirculation Unit TBV-F-15A thru C~~	~~SJAE A and Recombiner Room Recirculation Unit TBV-F-17A thru C~~	~~SJAE B and Recombiner Room Recirculation Unit TBV-F-17D thru F~~	~~Demineralizer Room Recirculation Unit TBV-F-18A thru C~~
~~Type~~	~~Central station air handler~~	~~Central station air handler~~	~~Central station air handler~~	~~Central station air handler~~	~~Central station air handler~~
~~Number of units~~	~~3-50% each~~	~~3-50% each~~	~~3-50% each~~	~~3-50% **each**~~	~~3-50% **each**~~
~~Flow rate (m^3/h)/unit~~	~~8,200~~	~~24,300~~	~~22,100~~	~~22,100~~	~~2,635~~
~~Fan:~~					
~~Type~~	~~Centrifugal~~	~~Centrifugal~~	~~Centrifugal~~	~~Centrifugal~~	~~Centrifugal~~
~~No. of fans per unit~~	~~1~~	~~1~~	~~1~~	~~1~~	~~1~~
~~No. of running fans~~	~~2~~	~~2~~	~~2~~	~~2~~	~~2~~
~~Heating coils:~~	~~None~~	~~None~~	~~None~~	~~None~~	~~None~~
~~No. of banks per unit~~	~~–~~	~~–~~	~~–~~	~~–~~	~~–~~
~~Capacity, each (MJ/h)~~	~~–~~	~~–~~	~~–~~	~~–~~	~~–~~
~~Cooling coils:~~					
~~Capacity, each (MJ/h)~~	~~154.07~~	~~454.69~~	~~417.84~~	~~417.84~~	~~48.99~~
~~Filters:~~					
~~Type~~	~~Medium **High** eff~~	~~Medium **High** eff~~	~~Medium **High** eff~~	~~Medium **High** eff~~	~~Medium **High** eff~~
~~Capacity (m^3/h)**/unit**~~	~~8,200~~	~~24,300~~	~~22,100~~	~~22,100~~	~~2,635~~
~~ASHRAE 52 eff.~~	~~85%~~	~~85%~~	~~85%~~	~~85%~~	~~85%~~

Table 9.4-5 Turbine Island HVAC System - Non-Safety-Related Heating Cooling Coils

Heating/Cooling Coils	Quantity	Cooling (MJ/h~~)~~	~~Heating (MJ/h)~~
Turbine Building HVAC	1	19,919.52	7,905.6
Turbine Building Electrical Equipment Area HVAC	2(1 on standby)	8,849.52	3,153.6

Table 9.4-5a Turbine Island HVAC System - Non-Safety-Related Fans

Fans	Quantity	Capacity (m^3/h)
T/B HVAC Supply Fans	3 (1 on standby)	192,750
T/B HVAC Exhaust Fans	3 (1 on standby)	27,850
T/B HVAC Compartment Exhaust Fans	2 (1 on standby)	359,700
T/B HVAC Lube Oil Area Exhaust Fans	2 (1 on standby)	9,300
T/B EEA HVAC Supply Fans	2 (1 on standby)	245,200
T/B EEA HVAC Exhaust Fans	2 (1 on standby)	211,500

Table 9.4-5b Turbine Island HVAC System - Non-Safety-Related Filters

Filters	Quantity	Capacity (m^3/h)
T/B HVAC Supply Filters	1	385,500
T/B HVAC Exhaust Filters	3 (1 on standby)	27,850
T/B HVAC Compartment Exhaust Filters	1	359,700
T/B HVAC Supply Filters	1	245,200

~~Table 9.4-5c Turbine Building *and Electrical Building* HVAC System – Non-Safety Related Equipment (Continued)~~

~~Item~~	~~Condenser Compt. Room Level 3 Recir. Unit~~	~~TCW Pump Area Recirculation Unit~~	~~Turbine Area Recirculation Unit~~	~~Steam to Hot Water Heat Exchanger Area~~
	~~*TRV* TBV–F–19A thru C~~	~~*TRV* TBV–F–20A thru C~~	~~*TRV* TBV–F–21A thru C~~	~~TBV–E–01A& 1B~~
~~Type~~	~~Central station air handler~~	~~Central station air handler~~	~~Central station air handler~~	~~Heat exchanger~~
~~Number of units~~	~~3–50% each~~	~~3–50% each~~	~~3–50% **each**~~	~~2–100% each~~
~~Flow rate (m^3/h)/unit~~	~~23,800~~	~~11,900~~	~~28,900~~	
~~Fan:~~				
~~Type~~	~~Centrifugal~~	~~Centrifugal~~	~~Centrifugal~~	~~–~~
~~No. of fans per unit~~	~~1~~	~~1~~	~~1~~	~~–~~
~~No. of running fans~~	~~2~~	~~2~~	~~2~~	~~–~~
~~Heating coils:~~	~~None~~	~~None~~	~~None~~	~~–~~
~~No. of banks per unit~~	~~–~~	~~–~~	~~–~~	~~–~~
~~Capacity, each (MJ/h)~~	~~–~~	~~–~~	~~–~~	~~–~~
~~Cooling coils:~~				
~~Capacity, each (MJ/h)~~	~~444.22~~	~~221.48~~	~~542.19~~	~~–~~
~~Filters:~~				
~~Type~~	~~*Medium* **High** eff~~	~~*Medium* **High** eff~~	~~*Medium* **High** eff~~	~~–~~
~~Capacity (m^3/h)**/unit**~~	~~23,800~~	~~*11,800* **11,900**~~	~~28,900~~	~~–~~
~~ASHRAE 52 eff.~~	~~85%~~	~~85%~~	~~85%~~	~~–~~
~~Heat Exchanger:~~				
~~Type~~				~~Shell and Tube~~
~~Capacity (MJ/h)~~				~~22,156.55~~

Table 9.4-5c Turbine Island HVAC System - Non-Safety-Related Air Handling Units

Non-Safety Related Air Handling Units	Quantity	Capacity (MJ/h)
[Turbine Building HVAC]		
OG Holdup Room	2 (1 on standby)	68.76 (Cooling) 11.88 (Heating)
Condenser Compartment Upper Area	3 (1 on standby)	582.48
Condenser Compartment Lower Area	3 (1 on standby)	567.36
MSH (A) Compartment	2 (1 on standby)	707.4
MSH (B) Compartment	2 (1 on standby)	703.44
Turbine Operation Area	2 (1 on standby)	605.88
IPB Cooling Unit Room	2 (1 on standby)	355.32
IPB Area	2 (1 on standby)	325.8
SCR Panel Room	2 (1 on standby)	355.32
[Turbine Building Electrical Equipment Area HVAC]		
HVAC Supply Fans Room	2 (1 on standby)	246.24
Air Compressor Room	2 (1 on standby)	310.68
TWC Heat Exchanger Room	2 (1 on standby)	792
P/C Room	5 (2 on standby)	792
ASD (A), (B) Room	3 (1 on standby)	968.76
ASD (C), (D) Room	3 (1 on standby)	785.88
Electrical Equipment Room	2 (1 on standby)	469.08

Table 9.4-5d Not Used~~Turbine Building Electrical Equipment Areas HVAC System Non-Safety Related Equipment~~

~~Item~~	~~Electrical Equipment Areas HVAC Supply Air Unit TBV-F-3A & 3B~~	~~Electrical Equipment Areas HVAC Exhaust Air Unit TBV-F-6A & 6B~~	~~Electrical Room #1 (El. 12300 mm) Recirculation Unit TBV-F-16A & 16B~~	~~Electrical Room #2 (El. 12300 mm) Recirculation Unit TBV-F-22A & 22B~~	~~Electrical Room #3 (El. 20300 mm) Recirculation Unit TBV-F-23A & 23B~~	~~Air Compressor Room Recirculation Unit TBV-F-5A & 5B~~
~~Type~~	~~Central station air handler~~	~~Central station air handler~~	~~Central station air handler~~	~~Central station air handler~~	~~Central station air handler~~	~~Central station air handler~~
~~Number of units~~	~~2-100% each~~	~~2-100% each~~	~~2-100% each~~	~~2-100% each~~	~~2-100% each~~	~~2-100% each~~
~~Flow rate (m^3/h)/unit~~	~~28,900~~	~~20,300~~	~~135,800~~	~~15,200~~	~~570,500~~	~~284,200~~
~~Fan:~~						
~~Type~~	~~Centrifugal~~	~~Centrifugal~~	~~Centrifugal~~	~~Centrifugal~~	~~Centrifugal~~	~~Centrifugal~~
~~No. of fans per unit~~	~~1~~	~~1~~	~~1~~	~~1~~	~~1~~	~~1~~
~~No. of running fans~~	~~1~~	~~1~~	~~1~~	~~1~~	~~1~~	~~1~~
~~Heating Coils:~~	~~None~~	~~None~~	~~None~~	~~None~~	~~None~~	~~None~~
~~No. of banks per unit~~	~~-~~	~~-~~	~~-~~	~~-~~	~~-~~	~~-~~
~~Capacity, each (MJ/h)~~	~~-~~	~~-~~	~~-~~	~~-~~	~~-~~	~~-~~
~~Cooling coils:~~						
~~Capacity, each (MJ/h)~~	~~580.0~~	~~-~~	~~2550.0~~	~~285.0~~	~~10,716.0~~	~~485.00~~
~~Filter:~~						
~~Type~~	~~Low eff~~	~~-~~	~~High eff~~	~~High eff~~	~~High eff~~	~~High eff~~
~~Capacity (m^3/h)/unit~~	~~28,900~~	~~-~~	~~135,800~~	~~15,200~~	~~570,500~~	~~284,200/unit~~
~~ASHRAE 52 efficiency~~	~~35%~~	~~-~~	~~85%~~	~~85%~~	~~85%~~	~~85%~~

Table 9.4-6a Radwaste Building Control Room Air Conditioning Unit

Equipment Name	Radwaste Building Control Room Air Conditioning Unit
Equipment ID Number	ACU 001A, ACU 001B
Number of Units	2
Air Flow Capacity, m^3/h	~~12,750~~16,650
Supply Air Fan Number per Unit	1 × 100%
Supply Air Fan Motor kW	11.2
Cooling Coil Capacity, Mj/h	~~304~~381
Heating Coil Heating Capacity, MJ/h	~~151.6~~160.4
Pre-Filters Type	Disposable
Final-Filter Efficiency – NBS Dust Spot Test	60%

Table 9.4-6b Electrical and HVAC Equipment Rooms Air Conditioning Unit

Equipment Name	Electrical and HVAC Equipment Room Air Conditioning Unit
Equipment ID Number	ACU 002
Number of Units	1
Air Flow Capacity, m^3/h	~~26,000~~36,190
Supply Air Fan Number per Unit	2 × 100%
Supply Air Fan Motor kW	22.38
Cooling Coil Capacity, MJ/h	~~830~~1,161
Pre-Filters Type	Disposable
Final-Filter Efficiency – NBS Dust Spot Test	60%

Table 9.4-6c Radwaste Process Areas Air Conditioning Unit

Equipment Name	Radwaste Process Areas Air Conditioning Unit
Equipment ID Number	ACU 003
Number of Units	1
Air Flow Capacity, m^3/h)	~~71,560~~67,960
Supply Air Fan Number per Unit	2 × 100%
Supply Air Fan Motor, kW	~~56~~44.7
Cooling Coil Capacity, MJ/h	~~2704~~2,347.5
Heating Coil Heating Capacity, MJ/h	~~1318~~925.3
Pre-Filters Type	Disposable
Final-Filter Efficiency – NBS Dust Spot Test	60%

Table 9.4-6d HVAC Equipment Room Unit Heaters

Equipment Name	HVAC Equipment Room Unit Heaters
Tag Number	EUH 1, EUH 2, EUH 3
Quantity	3
Type	Electric
Total Heating Capacity (kW)	~~15~~8

Table 9.4-6e Air Filtration Equipment Room Unit Heaters

Equipment Name	Air Filtration Equipment Room Unit Heaters
Tag Number	EUH 4
Quantity	1
Type	Electric
Total Heating Capacity (kW)	5

Table 9.4-6f ~~Building Entrance Area Duct Heater~~Not Used

~~Equipment Name~~	~~Building Entrance Area Duct Heater~~
~~Tag Number~~	~~DH-001~~
~~Quantity~~	~~1~~
~~Type~~	~~Electric~~
~~Total Heating Capacity (kW)~~	~~36~~

Table 9.4-6g Building Entrance Area Cabinet Heater

Equipment Name	Building Entrance Area Cabinet Heater~~s~~
Tag Number	CUH-1
Quantity	1
Type	Electric
Total Heating Capacity (kW)	~~18~~9

Table 9.4-6h Radwaste Process Area Unit Heaters

Equipment Name	Radwaste Process Area Unit Heaters
Tag Number	EUH 5, EUH 6, EUH 7, EUH 8, EUH 9, EUH 10
Quantity	6
Type	Electric
Total Heating Capacity (kW)	~~50~~18

Table 9.4-6i Elevator Machine Room~~Tank and Pump Area~~ Unit Heater~~s~~

Equipment Name	Elevator Machine Room~~Tank and Pump Area~~ Unit Heater~~s~~
Tag Number	~~EUH 11, EUH 12, EUH 13, EUH 14~~EUH-11
Quantity	~~4~~1
Type	Electric
Total Heating Capacity (kW)	~~25~~4

Table 9.4-6j Control Room Smoke Purge Fan

Equipment Name	Control Room Smoke Purge Fan
Equipment ID Number	FAN 001
Number of Units	1 × 100%
Fan Flow, m^3/h	~~12,750~~16,650
Fan Motor, kW	2.24

Table 9.4-6k Electrical and HVAC Equipment Rooms Return Air Fans

Equipment Name	Electrical and HVAC Equipment Rooms Return Air Fans
Equipment ID Number	FAN 002A, FAN 002B
Number of Units	2 × 100%
Service	Electrical and HVAC Equipment Rooms HVAC System (recirculation and smoke exhaust)
Fan Flow, m^3/h)	~~17,750~~26,680
Fan Motor, kW	~~5.6~~2.24

Table 9.4-6l Radwaste Process Areas Exhaust Air Fans

Equipment Name	Radwaste Process Areas Exhaust Air Fans
Equipment ID Number	FAN 003A, FAN 003B, FAN 003C
Number of Units	3 × 50%
Fan Flow, m^3/h	~~45,050~~37,720
Fan Motor, kW	56

Table 9.4-6m Radwaste Process Areas Air Exhaust Filtration Units

Equipment Name	Radwaste Process Areas Air Exhaust Filtration Units
Equipment ID Number	FLT 001A, FLT 001B, FLT 001C
Number of Units	3
Unit Air-Flow, m^3/h	~~45,040~~37,720
HEPA Filter Efficiency, on 0.30 micron particles	99.9%

Table 9.4-7a Service Building HVAC System Component Descriptions
Non-Safety Related Heating/Cooling Coils

Heating/Cooling Coils	Quantity	Cooling (MJ/h)	Heating (MJ/h)
Service Building Air Conditioning Unit	1	1,688	640
Service Building Emergency Filtration Unit	1	No Coil Required	36

Table 9.4-7b Service Building HVAC System Component Descriptions
Non-Safety Related Fans

Fans	Quantity	Capacity (m^3/h) (each)	Rated Power (KW) (each)
S/B Air Conditioning Unit Supply Fans	2	27,600	22.5
S/B Clean Area Exhaust Fans	2	1,200	1.2
S/B Controlled Area Exhaust Fans	2	11,900	5.6
S/B Emergency Filtration Unit Fans	2	2,650	3.75

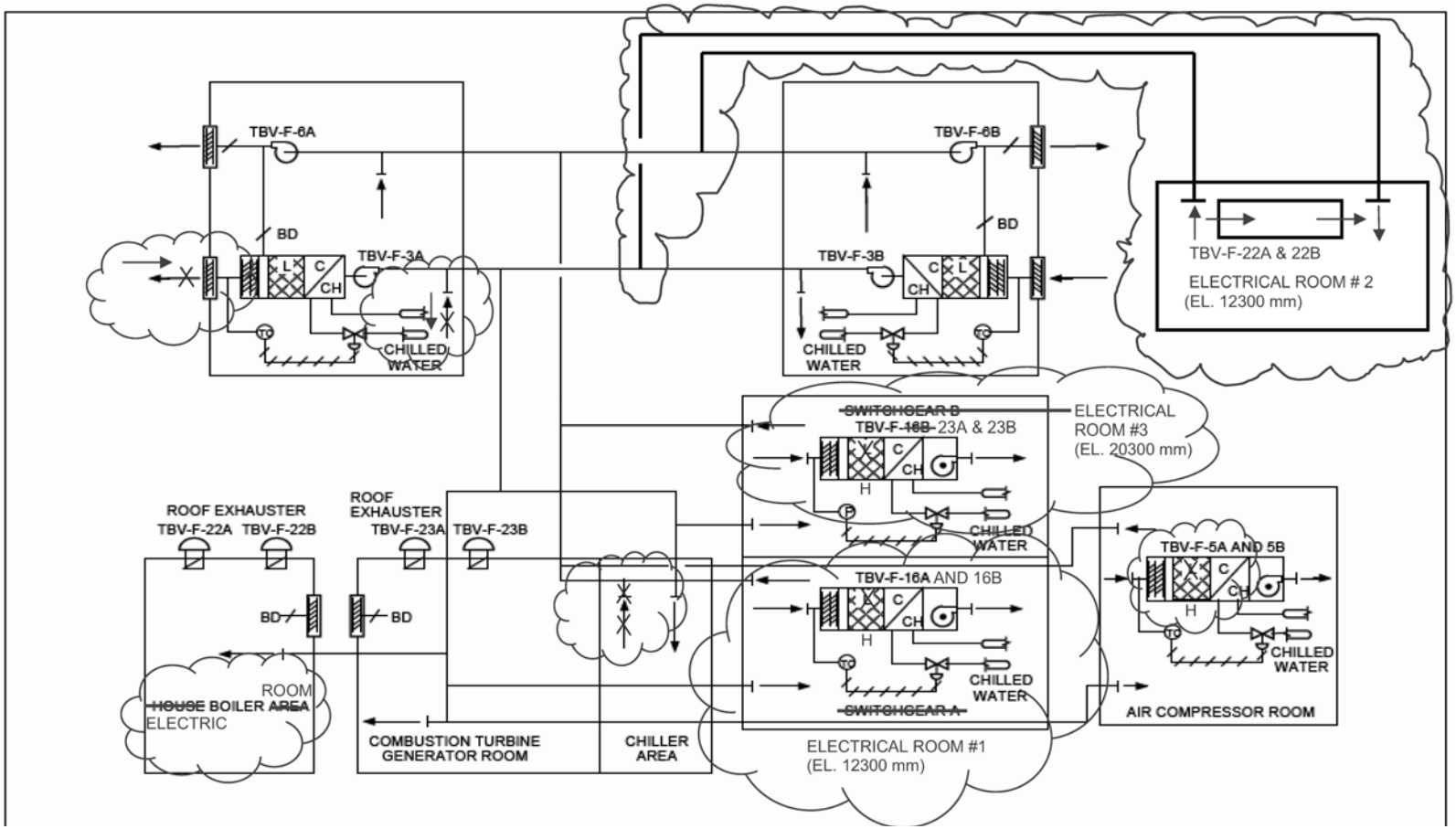

Figure 9.4-2c Turbine Building Electrical Equipment Areas (EEA) HVAC System Diagram

The following figures are modified, and located in Chapter 21:

- **Figure 9.4-1 Control Building HVAC (Sheets 1-5)**
- ***Figure 9.4-3 Secondary Containment HVAC System (Sheets 1-3)***
- ***Figure 9.4-10 Radwaste Building HVAC (Sheets 1-3)***
- **Figure 9.4-11 Service Building HVAC P&ID (Sheets 1 and 2)**

9.5 Other Auxiliary Systems

The information in this section of the reference ABWR DCD, including all subsections, tables, and figures, as modified by the STP Nuclear Operating Company Application to Amend the Design Certification rule for the U.S. Advanced Boiling Water Reactor (ABWR), "ABWR STP Aircraft Impact Assessment (AIA) Amendment Revision 3," dated September 23, 2010 is incorporated by reference with the following departures and supplements.

STD DEP T1 3.4-1	STD DEP 9.5-2 (Figure 9.5-3, replaced entire figure)
STP DEP 1.1-2 (Figures 9.5-2, 9.5-4 and 9.5-5)	STD DEP 9.5-3
STP DEP 1.2-2 (Table 9.5-5)	STD DEP 9.5-4
STD DEP 8.3-1	STP DEP 9.5-6 (Figure 9.5-6)
STD DEP 9.4-2 (Table 9.5-5)	STP DEP 9.5-7 (Table 9.5-5)
STD DEP 9.5-1	STD DEP Admin

9.5.1 Fire Protection System

9.5.1.1.2 Divisional Separation

STD DEP T1 3.4-1

All divisions are present in the control room and this cannot be avoided. It is the purpose of the remote shutdown panel to provide redundant control of the safe shutdown function from outside of the control room. The controls on the remote shutdown panel are hard wired to the field devices and power supplies. The signals between the remote shutdown panel and the control room are ~~multiplexed~~ communicated *~~over fiber optic cables so~~*such *that there are no power supply interactions between the control room and the remote shutdown panel.*

9.5.1.1.4 Combustible Loading

STD DEP T1 3.4-1

Combustible loading due to cable insulation has been minimized by locating the power sources adjacent to the loads served and ~~multiplexing~~ transmitting *the control signals to and from the control room. This has allowed the elimination of cable spreading rooms and most of the cables to and from the control room. ~~Multiplexing~~* Data communication *is also used within the control room so that the cables between panels have been reduced to mostly power cables.*

9.5.1.1.6 Smoke Control System

STD DEP 9.4-2

Upon manual initiation of the smoke removal mode, the recirculation damper is closed, the exhaust fans are stopped, and the smoke removal fan is started in conjunction with

the supply fan for 100% outside air purging. In the Control Building, the recirculation damper is closed, the damper in the bypass duct around the air handling unit is opened, *and* ~~one or~~ *both* ~~*the*~~ *exhaust fans are operated in conjunction with the supply fan for smoke removal.*

9.5.1.1.7 Spurious Control Actions

STD DEP T1 3.4-1

As stated above, the systems are separated by fire areas on a divisional basis. ~~*The multiplexing system is a dual channel system. Two simultaneous, identical digitized control signals are required at the demultiplexer for control action to be taken at the field device.*~~ The ESF Logic and Control System (ELCS) utilizes redundant fiber optic links to communicate ESF system level actuation status to the Remote Digital Logic Controllers (RDLCs), which control the remote input/output functions and the actuation of the electromechanical components. The RDLC utilizes diagnostics to verify the validity of each redundant message. The redundant messages received by the RDLC must match for component actuation to occur. *The probability of* ~~*two*~~ *spurious* messages occurring on each of the redundant links that both pass the communication diagnostics and that also match between the two redundant links ~~*signals matching*~~ *is essentially zero.*

The significance of the ~~*two-channel operation of the multiplex system*~~ redundant fiber optic design *is that, if the ability to operate from the control room is lost, equipment will continue to run until manually shutdown in the field by the operators. Equipment may also be manually started at the switchgear or motor control centers during a control room fire situation without fear that failures in the control room would cause the equipment to be shutdown. The feature of being able to start equipment locally without fear of it being shut down by spurious signals from the control room makes it possible to utilize nonsafety-related systems such as the feedwater and condensate pumps in the Turbine Building as backups to the safety-related safe shutdown system, if desired.*

The interlocks which prevent damage of equipment may be accomplished directly and by hard wiring in the field. For example, the protective relaying for the switchgear is located in the switchgear and the interlocks accomplished in switchgear. Signals for operational logic are ~~*multiplexed*~~ communicated *to the control room, but protective actions are not dependent on conditions in the control room.*

The evaluation of single and multiple spurious operations that could adversely impact post-fire safe shutdown will be performed in a manner that is consistent with the methodology of NEI 00-01, Revision 2 as modified by the guidance of RG 1.189 Revision 2 as it applies to Single and Multiple Spurious Operation Analysis.

9.5.1.3.1 General Description

STP DEP 1.2-2

The suppression systems for the buildings and the plant yard are shown in the following figures:

Area	*Figures*
Reactor Building	*9A.4-1 thru 9A.4-10*
Control Building	*9A.4-11 thru 9A.4-16*
Turbine Building	*9A.4-17 thru 9A.4-21*, 9A.4-33 and 9A.4-34
Service Building	*9A.4-22 thru 9A.4-27*
Radwaste Building	*9A.4-28 thru 9A.4-32*
Plant Yard	*9.5-5*

9.5.1.3.4 Protection of Operating Units

The following site-specific supplement addresses the COL License Information Item discussed in this subsection.

Fire protection of the operating units during construction of the additional units is addressed in Appendix 9E.

9.5.1.3.5 General Description of Fire Protection System

STP DEP 1.1-2

STP DEP 1.2-2

STP 3 & 4 is a dual-unit station. The water supply for fire protection will be shared by STP 3 & 4. A single fire protection pump house and two storage tanks are located within the protected area boundary that provides water for fire suppression to both units via piping in the yard. This common system has the same capability as the system for the single unit design. The fire protection water supply complies with Regulatory Guide 1.189, Rev. 1, which states that a common water supply may be utilized for multi-unit nuclear power plant sites with a common yard fire main loop. The common fire water supply and yard main piping system for STP Units 3 & 4 are depicted in Figures 9.5-4 and 9.5-5. The common yard fire main loop surrounding STP Units 3 & 4 is cross-connected between units in accordance with Regulatory Guide 1.189, Rev. 1.

The Turbine Building is provided with standpipes, hose reels and ABC portable extinguishers throughout the building. In addition, the following fire suppression systems provide primary fire suppression capability to the following areas:

(1) *Automatic closed head sprinkler systems are provided* ~~*in the open grating area of the three floors under the turbine*~~ throughout the Turbine Building except in higher hazard areas that are protected as described below.

(2) *Deluge foam-water sprinkler systems are provided in the* combustion turbine generator areas, hydrogen seal oil unit room, turbine lube oil storage tank room, EHC hydraulic control unit room, *lube oil conditioning area and the lube oil reservoir area.*

~~(3) *A deluge sprinkler system is provided in the hydrogen seal oil unit area.*~~

~~(4) *A preaction sprinkler system is provided in the auxiliary boiler area.*~~

9.5.1.5 Inspection and Testing Requirements

The following site-specific supplement addresses inspection and testing requirements for both startup and post startup of the fire protection system.

A final plan for implementation of the fire protection system pre-operational and post-operational inspection and testing program, based on the as-procured and as-installed fire protection systems and components, including the fixed and portable emergency lighting and the fixed and portable communication systems, will be available prior to commencement of construction. The plan includes documented instructions, procedures or drawings that prescribe inspections and tests that govern the installed fire protection systems. The scope of items for inspections and testing includes fire protection system equipment and active components, as well as passive features such as fire barriers, fire dampers, fire doors, and fire-rated penetration seals. (COM 9.5-1)

The plan will comply with Regulatory Position C.2.4 in Regulatory Guide 1.189, Revision 1. Preoperational and post-operational inspections and tests will comply with the applicable NFPA codes and standards. (COM 9.5-2)

9.5.2 Communication Systems

STP DEP 1.1-2

At STP 3 & 4, a common communication system is used to provide plant-wide communications between the dual units. The communication system is not safety-related. A common communication system providing plant wide communications is a safety enhancement since it allows for ease of communication between units. The representative outline of the common communication system is shown in Figure 9.5-2 for STP 3 & 4.

9.5.2.6.3 System Operation

The following site-specific supplement addresses the COL License Information Item discussed in this subsection.

Telephone system EPBX switches are powered by an individual 8-hour battery system. These battery systems are charged by offsite 120 Vac backed up by the

Emergency Operations Facility or Nuclear Support Center diesels. Loss of normal 120 Vac and low battery voltages are annunciated.

The jacks for use with electosound telephones in the maintenance jack system are powered by 8 Vdc from the sectionalizing panels. The power supply is mounted internal to the sectionalizing panel.

Two-way radio system repeater base stations are powered by normal plant 120 Vac power backed up with a non-Class 1E Combustion Turbine Generator (CTG). Mobile radios are powered by vehicular batteries. Handheld portables are powered with self-contained batteries.

The radio paging transmitter and countertop paging terminal are powered by normal plant 120 Vac backed up by a non-Class 1E CTG. The pocket pager units are supplied with a self-contained battery.

The operator communication panels are powered with normal plant 120 Vac and backed up with non-Class 1E CTG and an 8-hour battery.

9.5.3 Lighting and Servicing Power Supply System

STD DEP 9.5-4

STD DEP Admin

All lighting systems are designed to provide intensities consistent with the lighting needs of the areas in which they are located, and with their intended purpose. The lighting design considers the effects of glare and shadows on control panels, video display devices, and other equipment, and the mirror effects on glass and pools. Lighting and other equipment maintenance, in addition to the safety of personnel, plant equipment, and plant operation, is considered in the design. Areas containing flammable materials (e.g.., battery rooms, fuel tanks) have explosion proof lighting systems. Areas subject to high moisture have water-proof installations (e.g.., drywell, washdown areas). Plant AC lighting systems are generally of the fluorescent type, with ~~mercury~~ High-Pressure Sodium (HPS) *lamps (or equivalent) provided for high ceiling~~, except where breakage could introduce mercury into the reactor coolant system~~. Incandescent lamps are used for DC lighting systems and above the reactor, and fuel pool ~~and other areas where lamp breakage could introduce mercury into the reactor coolant~~.*

The following site-specific supplement is provided.

Emergency lighting comprised of emergency DC lighting and guide lamp lighting systems is provided throughout the plant as necessary to support fire suppression actions and safe-shutdown operations, including access and egress pathways to safe-shutdown areas during a fire event.

The emergency lighting power distribution system contains protective devices necessary to preclude a fire in one area from causing a loss of emergency lighting in any unaffected area required for safe-shutdown operations.

9.5.3.1.1 General Design Bases

The general design bases for the Nuclear Island portion of the lighting systems are as follows:

(4) Each of the normal, standby or emergency lighting systems has the following arrangement criteria:

(l) ~~*For mercury lamps, ballasts can be installed separately for life extension under the defined environment.*~~ (Not Used)

The following site-specific supplement is provided.

(s) Control switches for lighting fixtures inside the drywell or containment are installed both inside and outside of the drywell/containment.

(5) Lighting fixtures shall be selected in accordance with the following criteria:

(a) Lighting fixtures inside the plant are the following type of fixtures:

(ii) ~~*Mercury*~~ **HPS** ***lamps*** *–* ~~*Mercury*~~ HPS *lamps (or equivalent) shall be selected as fixtures for high ceiling areas* ~~*(except in reactor building or other areas where lamp breakage could introduce mercury into the reactor coolant).*~~

The following site-specific supplement is provided.

(o) High-efficiency electronic ballasts are not used in a high radiation environment.

(p) Lighting fixtures for yard lighting are 1000W HPS lamps mounted on 100-foot (30.48m) lighting poles with retractable/lowering devices.

9.5.3.1.2 Safety-Related Design Bases

Nuclear safety-related design bases for ABWR Standard Plant lighting systems are as follows:

(1) ~~*Mercury vapor fixtures and mercury switches are not used where a broken fixture or switch may result in introduction of mercury into the reactor coolant system.*~~ (Not Used)

(2) Adequate lighting for any safety-related areas, such as areas used during emergencies or reactor safe shutdown, including those along the appropriate access or exit routes, are provided from three different lighting circuits (standby AC; emergency 125VDC, or self-contained battery fixtures).

9.5.3.2 System Description

~~*Lighting fixtures that contain mercury are not used inside the Reactor Building or in any other location where broken fixtures may introduce mercury into the reactor coolant system.*~~

9.5.3.2.1 Normal (Non-Class 1E) Lighting

The following site specific-supplement is provided.

Yard lighting is supplied at 480V from non-Class 1E sources. If this power is not available, power for the yard lighting will be automatically provided from the non-Class 1E CTG.

9.5.3.3 Inspection and Testing Requirements

STD DEP Admin

Since the normal standby and emergency lighting circuits are energized and maintained continuously, they require no periodic testing. However, periodic inspection and bulb replacement will be performed (Subsection ~~8.3.4.2.5~~ 8.3.4.25*). The guide lamps are capable of being tested and will be inspected and tested periodically to ensure operability of lights and switching circuits.*

9.5.4 Diesel Generator Fuel Oil Storage and Transfer System

STP DEP 9.5-6

9.5.4.1.1 Safety Design Bases

(4) The diesel-generator fuel oil storage and transfer system is of Seismic Category I design. In addition, the storage tanks are separately located underground in vaults, designed for stick gauge access *and are protected from damage by flying missiles carried by tornados and hurricanes, from external floods, and other environmental factors. The fill connection is located at grade elevation. The ~~vent and~~ sample connection ~~are~~* is *located a little above the grade elevation. The fill and sample lines are capped and locked to prevent entry of moisture.* The fill and sample lines are also provided with locked-closed isolation valves. The vent is located above the maximum flood level. *Each vent is of fireproof goosenecked line with fine mesh screen to prevent access of debris.*

9.5.4.2 System Description

The diesel-generator fuel oil storage and transfer system for each engine consists of a yard 7-day storage tank, a fuel oil day tank, two *fuel oil transfer ~~pump~~* pumps, located inside the storage tank, *suction strainer, duplex filter, instrumentation and controls, and the necessary interconnecting pipe and fittings. A bleed line returns excess fuel oil from the day tank for recirculation to the yard storage tank.* A gravity drain is supplied from the bottom of each of the yard storage tanks. These drains periodically remove any water accumulation and sediment from the tanks. The suction of the fuel oil transfer

pumps is elevated two to three inches above the tank low points to allow some tank volume for the settling of any water. *Day tank elevation is such that the engine fuel oil pump operates with flooded suction. The bottom of the day tank will never be lower than the pump suction centerline.*

9.5.4.3 Safety Evaluation

The Seismic Category I portions of diesel-generator fuel oil piping ~~will be~~ is *routed in tunnels between the storage tanks and the Reactor Building. The system ~~will be~~* is *provided with a protection against external and internal corrosion. The ~~buried portion of the~~* storage *tanks,* located in vaults, *~~and piping will be~~* are *provided with waterproof protective coating. ~~and an impressed current-type cathodic protection, to control the external corrosion of underground piping system. The impressed current-type cathodic protection system will be designed to prevent the ignition of combustible vapors or fuel oil present in the fuel oil system, in accordance with Regulatory Guide 1.137, Paragraph C.1.g.~~*

9.5.4.4 Tests and Inspections

Each fuel oil storage tank will be emptied and accumulated sediments be removed every 10 years to perform the ASME Section XI, Article IWD-2000 examination requirements.

~~In accordance with Regulatory Guide 1.137, periodic surveillance of cathodic protection for underground piping system will be provided, not to exceed a 12-month interval, to make sure that adequate protection exists. At intervals not exceeding 2-months, each of the cathodic protection rectifiers shall be inspected.~~

New fuel oil will be tested for specific gravity, cloud point and viscosity and visually inspected for appearance prior to addition to ensure that the limits of ASTM D975 are not exceeded. Analysis of other properties of the fuel oil will be completed within two weeks of the fuel transfer.

9.5.5 Diesel-Generator Jacket Cooling Water System

STD DEP 9.5-1

9.5.5.4 Tests and Inspection

To ensure the availability of the diesel-generator cooling water system, scheduled inspection and testing of the equipment is performed in accordance with Regulatory Guide ~~1.108,~~ 1.9*, as part of the overall engine performance checks.*

9.5.10 Motor-Generator Set

STD DEP 9.5-3

STD DEP 8.3-1

9.5.10.2 System Description

Two MG sets are provided; each is connected to an independent ~~6.9~~ 13.8 kV power bus. The individual power buses are separated from one another by unit auxiliary ~~transformer~~ transformers and circuit breakers. Each MG set is designed to provide constant voltage and constant frequency power to three adjustable speed drives (ASDs). These ASDs are the static converter devices which generate the appropriate variable voltage, variable frequency power to the connected RIPs.

Each MG set consists of the following components:

(1) An induction motor.

(2) A generator and excitation system. The exciter design is of brushless type.

(3) A flywheel of appropriate moment of inertia to satisfy the pump speed coastdown requirements as specified in Subsection 9.5.10.1.

(4) Control and protective circuits. The control circuit is designed to maintain generator output at a fixed voltage-to-frequency (V/f) ratio for optimum RIP speed modulation. Protective logic and circuits, monitoring instrument, annunciators, indicators, etc. are provided to protect the MG set components from being damaged by consequences of abnormal equipment operation.

The MG set does not interface directly with the ASD/RIP loads; it interfaces with the loads through ~~three isolation~~ three vacuum circuit breakers (VCBs) and three ASD input transformers. ~~These isolation~~ Each VCB provides for automatic or manual disconnection of the associated ASD input transformer and ASD/RIP motor load from the generator power output. The ASD input transformers provide two functions in the RIP power supply systems. They step down the MG set voltage output to the level compatible with the rectifier ~~circuit~~ circuitry in the ASD. Also, by phase-shifting the output of the three transformers by ±20 degrees among one another, a majority of the harmonic currents produced by the 6-pulse ASD converter ~~is~~are canceled, thus preventing most of the negative-phase-sequence current from flowing back into the generator.~~Also, by applying phase-shifting principles for the design of the ASD input transformers, the level of the harmonic currents produced by the three operating ASD converters are greatly reduced, as compared to the harmonic currents that would be produced by an equivalent single input transformer with an associated single 6-pulse type ASD converter design, thus minimizing the harmonic currents flowing back into the generator.~~

The MG set will be started with no load. This is accomplished by first leaving all connected ASD loads in their ~~tripped position~~ shutdown or tripped status. The MG set motor is started by a control switch in the main control room, and accelerates directly to the rated speed. The connected ASD loads are then sequentially placed online by the control room operator through issuance of proper mode switch commands. The MG set output varies from no load to full load in accordance with the variable operating speed of the ~~RIP's~~ RIPs . Shutdown of the MG sets is the exact reverse of the startup.

9.5.11 Combustion Turbine/Generator

STD DEP 8.3-1

9.5.11.1 Design Basis

The design bases of the equipment shall meet the following performance criteria:

(1) The CTG unit shall automatically start, accelerate to required speed, reach nominal voltage and frequency, and begin accepting load within ~~two~~ ten *minutes of receipt of its start signal.*

(2) The CTG shall be capable of being manually connected to SBO shutdown loads (via any one of the Class 1E diesel generator buses) from the main control room within ten minutes from the beginning of the event. The CTG shall also be capable of being manually connected to the Class 1E buses. However, the CTG shall not be normally connected to plant safety buses nor require any external AC power to operate. There shall be two circuit breakers (one Class 1E and one non-class 1E) in series between the bus automatically connected to the *CTG and each Class 1E bus.*

(4) The CTG shall have an ISO rating (continuous rating at ~~15°C and at sea level~~ site conditions*) of at least ~~9~~* 20 *MW, with nominal output voltage of ~~6.9~~13.8 kV at 60 Hz.*

9.5.11.2 System Description

The CTG is designed to supply standby power to selected loads on any two of the three turbine building (Non-Class 1E) ~~6.9~~ 4.16 kV buses which carry the plant investment protection (PIP) loads during LOPP events. The CTG automatically starts on detection of a voltage ~~drop~~ of ≤70% on its preselected PIP buses. When the CTG is ready to load, if the voltage level is still deficient, power is automatically transferred to the CTG.

Manually controlled breakers also provide the capability of connecting the combustion turbine generator to any of the ~~6.9~~ 4.16kV Class 1E buses if all other power sources are lost. The reconfiguration necessary to shed PIP and connect the CTG to a preselected bus for emergency shutdown loads can be accomplished from the main control room within 10 minutes of the onset of a postulated station blackout event. Thus, the CTG meets the requirements for alternate AC (AAC) source (per Regulatory Guide 1.155) such that a station blackout coping analysis is not required. The additional connection capability for the remaining Class 1E buses enable the operator to start and operate redundant shutdown loads and other equipment loads if necessary.

(3) ~~A reduction drive gear system between the turbine and generator.~~ Not Used.

9.5.12 Lower Drywell Flooder

STD DEP 9.5-2

9.5.12.1 Design Basis

The equipment shall meet the following performance criteria:

(1) The LDF shall provide a flow path from the suppression pool to the lower drywell when the drywell air space temperature reaches 260°C.

(7) The LDF shall distribute flow ~~evenly~~ around the circumference of the lower drywell.

9.5.12.2 System Description

The LDF, shown schematically in Figure 9.5-3, provides a flow path for suppression pool water into the lower drywell area during severe accident scenario that leads to core meltdown, vessel failure, and deposition of molten corium on the lower drywell floor. Molten corium is a molten mixture of fuel, reactor internals, the vessel bottom head and control rod drive components. The flow path is opened when the lower drywell airspace temperature reaches 260°C.

The LDF consists of ten pipes that run from the vertical pedestal vents into the lower drywell. Each pipe ~~contains~~ has an isolation valve and *a fusible plug valve connected to the end of the pipe that extends into the lower drywell ~~by a flange~~. The fusible plug valves open when the drywell air space ~~(and subsequently the fusible plug)~~ temperature reaches 260°C. When the fusible plug valves open, a minimum of 10.5 L/s of suppression pool water will be supplied through each flooder pipe (105 L/s total) to the lower drywell to quench the corium, flood the lower drywell and remove corium decay heat, which is estimated at 1% of rated thermal power. The flow rate is based on a minimum hydrostatic head of 200 mm above the flooder pipe inlet centerline and takes the frictional losses through the flooder pipe and fusible plug valve into account.*

~~*The fusible plug valves are made from flanges welded to the end of the vent inside the lower drywell area. The inner diameter of the pipe is slightly enlarged to accommodate a stainless steel separation disk, an insulating disk and fusible metal. The stainless steel disk prevents suppression pool water from corroding the plug material. The insulating disk thermally insulates the fusible metal from the wetwell water to assure that the fusible metal is not cooled by wetwell water and prevented from melting during the severe accident high lower drywell temperature conditions. Teflon was selected for the insulating disk because it has a softening temperature of 400°C and a maximum continuous operating temperature of 288°C, both of which are above the plug melting temperature. Furthermore, teflon has high chemical resistance and will not adhere to the stainless steel plug or the fusible plug. The end of the fusible plug valve is covered with a plastic cover that has a low melting point. The purpose of the cover is to avoid corrosion of the fusible metal material and to assure that any toxic components from the fusible metal material that might be released do not escape into the lower drywell area during normal plant operation.*~~ The fusible plug valves open fully, and stay open when the air surrounding the fusible plug valves reaches 260°C. Opening of the valves is triggered by a temperature sensitive fusible plug (or fusible link) that melts when the surrounding air in the lower drywell reaches the opening temperature of 260°C. The temperature sensitive fusible material is isolated from the thermal effects of the

suppression pool water inside the fusible plugs as required, to assure consistent operation when the 260°C opening temperature is reached. The fusible plug valves are not pressure relief valves. The pressure retaining portions of the fusible plug valves that contact the suppression pool water are made from stainless steel materials. The seals and gaskets used are compatible with suppression pool water at the design pressure and temperature listed in Subsection 9.5.12.3.1. The fusible plug valves have zero leakage under all operating and accident conditions, until the surrounding air temperature reaches 260°C. The temperature sensitive fusible material is protected or isolated, as required, from the following: moisture and humidity in the lower drywell, contact with personnel or equipment in the lower drywell, or release of any toxic components to the lower drywell (except during heat-up to 260°C).

9.5.12.3 Safety Evaluation

9.5.12.3.1 General Evaluation

The fusible plugs are passive, safety-related components whose design function is to remain closed to maintain the suppression pool pressure boundary during all operating conditions, including a Design Basis Accident. They are non-ASME Code components due to their application and function to open during a Beyond Design Basis Accident at a set temperature (260°C).

The fusible plug is required to open fully when the ~~outer metal temperature of~~ air surrounding *the valve reaches 260°C during a severe accident and to pass a minimum of 10.5 L/s with 375 mm of water above the valve inlet* flange*.*

A plastic cover on the valve outlet seals the valve from the intrusion of moisture that could cause corrosion of the fusible metal material. The plastic cover has a melting point below 130°C and greater than 70°C and is required to melt completely or offer minimal resistance to valve opening when the opening temperature is reached.

9.5.12.4 Testing and Inspection Requirements

No testing of the LDF system will be required during normal operation. During refueling outages, the following surveillance would be required:

(1) During each refueling outage, verify that there is no leakage from the fusible plug valve flange or outlet when the suppression pool is at its maximum level

~~(2) Once every two refueling outages, lower suppression pool water level or plug the flooder pipe inlet and replace two fusible plug valves. Test the valves that were removed to confirm their function. This practice follows the precedent set for inservice testing of Standby Liquid Control System (SLCS) explosive valves in earlier boiling water reactors.~~

(2) Once every two refueling outages, two of the fusible plugs valves are tested to demonstrate proper opening function and triggering of the opening at the proper temperature. These tests may be performed together or separately, and the two fusible plug valves tested (or temperature sensitive materials) will be replaced.

9.5.13 COL License Information

9.5.13.1 Contamination of the Diesel Generator Combustion Air Intake

The following site-specific supplement addresses COL License Information Item 9.18.

Measures will be undertaken prior to and subsequent to testing of the diesel generators to restrict contaminating substances from the STP site which may be available to the diesel generator air intakes. (COM 9.5-3)

9.5.13.2 Use of Communication System in Emergencies

The following standard supplement addresses COL License Information Item 9.19.

Procedure(s) for use of the plant communication system in emergencies including from RSS in the event of a main control room fire will be developed prior to fuel load. These procedures will be developed consistent with the plant operating procedure development plan in Section 13.5. (COM 9.5-4)

9.5.13.3 Maintenance and Testing Procedure for Communication Equipment

The following standard supplement addresses COL License Information Item 9.20.

Procedure(s) for maintenance and testing of the plant communication systems will be developed prior to fuel load. These procedures will be developed consistent with the plant operating procedure development plan in Section 13.5. (COM 9.5-5)

9.5.13.4 Use of Portable and Hand Light in Emergency

The following standard supplement addresses COL License Information Item 9.21.

The design of the lighting system complies with BTP CMEB 9.5-1, position C.5.g (1) and (2) as discussed below.

Suitable fixed and portable emergency lighting devices are available as follows:

(1) Fixed self-contained lighting consisting of fluorescent or sealed-beam units with individual 8-hour minimum battery power supplies are available in areas that must be manned for safe shutdown and for access and egress routes to and from all fire areas. Safe shutdown areas include those required to be manned if the control room must be evacuated.

(2) Suitable sealed-beam battery-powered portable hand lights are available for emergency use by the fire brigade and other operations personnel required to achieve safe plant shutdown.

9.5.13.5 Vendor Specific Design of Diesel Generator Auxiliaries

The following standard supplement addresses COL License Information Item 9.22.

The as-built diesel generator support systems (i.e., the Diesel Generator Fuel Oil System, the Diesel Generator Cooling Water System, the Diesel Generator Starting Air

System, the Diesel Generator Lubrication System, the Diesel Generator Combustion Air Intake and Exhaust System) will be reviewed for any differences in design from those discussed in Subsections 9.5.4 through 9.5.8 of the reference ABWR DCD, respectively. The FSAR will be updated in accordance with 10 CFR 50.71(e) to identify any departures. (COM 9.5-6)

In accordance with 10 CFR 50.71(e), the FSAR will be updated to provide the following as-built information:

(1) Not Used

(2) Provision for stick gauges on fuel storage tanks for the Diesel Generator Fuel Oil Storage and Transfer System.

(3) A description of engine cranking devices for the Diesel Generator Starting Air System (Subsection 9.5.6.).

(4) Duration of cranking cycle and number of engine revolutions per start attempt for the Diesel Generator Starting Air System (Subsection 9.5.6.).

(5) Lubrication system design criteria (pump flows, operating pressure, temperature differentials, cooling system heat removal capabilities, and electric heater characteristics) for the Diesel Generator Lubrication System (Subsection 9.5.7.).

(6) Selection of a combustion air flow capacity sufficient for complete combustion in the Diesel Generator Combustion Air Intake and Exhaust System (Subsection 9.5.8.).

(7) Volume and design pressure of air receivers (sufficient for 5 start cycles per receiver) for the Diesel Generator Starting Air System (Subsection 9.5.6.).

(8) Compressor size (sufficient discharge flow to recharge the system in 30 minutes or less) for the Diesel Generator Starting Air System (Subsection 9.5.6.).

9.5.13.6 Diesel Generator Cooling Water System Design Flow and Heat Removal Requirements

The following standard supplement addresses COL License Information Item 9.23.

In accordance with 10 CFR 50.71(e), the FSAR will be updated to provide the following as-built information: the design flow and heat removal requirements for the Diesel Generator Cooling Water System (Subsection 9.5.5.), including the design heat removal capacities of all the coolers and heat exchangers in the system. (COM 9.5-7)

In accordance with 10 CFR 50.71(e), the FSAR will be updated to provide the following as-built information:

(1) Type of jacket water circulating pumps (i.e., motor-driven or others) (Subsection 9.5.5).

(2) “Amot” brand or equal type of temperature sensor (per NUREG/CR-0660, Page V-17, Recommendation under Item 4).

(3) Expansion tank capacity (Subsection 9.5.5).

(4) NPSH of jacket water circulating pump (Subsection 9.5.5).

(5) Cooling water loss estimates (Subsection 9.5.5).

9.5.13.7 High Energy Piping Penetration Seals

The following site-specific supplement addresses COL License Information Item 9.24.

STP high energy piping penetrations through 3-hour fire rated walls will be provided with 3-hour fire-rated penetration seals in accordance with a nationally recognized laboratory tested and approved assemblies. Actual construction of a specific tested penetration seal assembly will be made after field verification of the dimensions, configuration, and orientation of the as-constructed penetration with all penetrating pipes and other commodities identified.

Tested penetration seal assembly design ratings normally include sealing product qualifications for high temperature exposure and some limited lateral movement of the penetrating items. For high energy piping penetrating fire barriers, fire rated boot seals with annular thermal insulation for high temperature pipe applications that include lateral or axial movement may be used.

Should the criteria requirements for the specific penetration seal exceed the design ratings of the tested assembly, a substitute will be adequate to withstand the hazards associated with the area, based on an equivalency engineering evaluation established by a qualified fire protection engineer. Fire endurance and performance qualification testing of the products, assembly or portions thereof may be performed to support the equivalency engineering evaluation. Appropriate test methodology and acceptance criteria will be established for the proposed equivalent penetration seal assembly construction. ASTM E 814 Standard Test Method for Fire Tests of Through-Penetration Fire Stops, 1994 edition and NFPA 251 Standard Methods of Tests of Fire Resistance of Building Construction and Materials, 2006 edition will be used as appropriate. STP structural fire barriers and penetration fire barriers testing and qualifications, fire endurance testing methods and acceptance criteria are consistent with Regulatory Position C.4.2.1.5 in RG 1.189, Revision 1.

9.5.13.8 Diesel Generator Requirements

The following site-specific supplement addresses COL License Information Item 9.25.

(1) Diesel Generator procedures will be provided that require loading of the engine up to a minimum of 40% of full load (or lower per manufacturer's recommendation) for 1 hour following up to 8 hours of continuous no-load or light-load operation. (COM 9.5-8)

(2) The vendor-specific design for the Diesel Generator Starting Air System will be reviewed to assure it meets NUREG/CR-0660 Recommendations 2.a and 2.b. All contactors and relays will have dust tight enclosed contacts of the bifurcated type as manufactured by Struthers-Dunn or equal. All contactors and relays for the Diesel Generator equipment will be enclosed in dust-tight steel cabinets having fully gasketed doors and other openings. Other equipment which may have louvers for ventilation, such as the static exciter cabinets, will also have dust-tight gasketed doors and filter equipped louvers of sufficient number for proper cooling and protection of the field flasher contacts.

STP will adhere to NUREG/CR-0660 Recommendation 2.d by periodically wetting the ground where construction work is being done adjacent to an operating power plant to reduce blowing dust and dirt.

STP will adhere to NUREG/CR-0660 Recommendation 5 by using concrete or masonry type paint on the floors of all rooms of the Diesel Generator units which may house any electrical contactors, relays, circuit breakers or other devices having electrical contacts which are part of the Diesel Generator systems. (COM 9.5-9)

9.5.13.9 Fire Protection Program for Protection of Special Fire Hazards Exposing Areas Important to Safety

The following site-specific supplement addresses COL License Information Item 9.26.

Applicable fire protection program elements for the Main Transformer, Equipment Entry Lock, Fire Protection Pump House and Ultimate Heat Sink comply with Regulatory Position C.7 in RG 1.189, Revision 1. Applicable fire protection program elements include, but are not limited to, the control of combustibles, incorporation of fire protection systems and features into the facility design, fire related administrative controls and pre-installation and post-installation inspections and testing.

(1) Outdoor oil-filled main transformers have oil spill confinement features or drainage away from the buildings. Transformers are located at least 50 feet from the building, or building walls within 50 feet of oil-filled transformers have no openings and have a fire resistance rating of at least 3 hours. Flammability rating of the transformer oil is the best available in the industry. Oil-filled transformers are also protected by a fixed deluge water spray system in accordance with NFPA 15, Water Spray Fixed Systems for Fire Protection.

(2) Equipment Entry Lock or Large Component Entrance Building, shown in ABWR DCD Figure 1.2-8, Reactor Building Arrangement Plan at Elevation 12300mm, is a 3-hour fire resistant structure adjacent to but independent from the Reactor Building. The airlock door between the Equipment Entry Lock and the Reactor Building is airtight and fire resistant. The Large Component Entrance Building is protected by fire detection and alarms to annunciate a fire condition at the Main Control Room and automatic water sprinkler. Fire administrative controls will be implemented for access control and combustible storage in the building to assure that in-situ combustible loading is negligible and transient combustibles are reduced. Administrative Controls prevent potential ignition sources.

(3) The Fire Protection Pump House is located remote from any structures onsite and is therefore protected from the effects of a fire, should it occur. The electric motor-driven fire pump is separated by a 3-hour fire barrier from the diesel engine-driven fire pump installation, so the fire pumps are not subject to a common failure due to a single fire event inside the pump house. The fire protection pump house is protected by automatic water sprinklers, in addition to a fire detection and alarm system that annunciates a fire event in its incipient stage in the Control Room. Fire pumps installation and post-installation periodic inspections and testing comply with Regulatory Position 3.2.2 in RG 1.189, Revision 1 and applicable NFPA Standards.

(4) The Ultimate Heat Sink (UHS) consists of three redundant trains of counterflow mechanically induced draft cooling towers. The cooling towers have a substantial reinforced concrete housing construction with non-combustible fill. The cooling towers are located with a significant physical separation distance from any structures onsite so that the UHS will not see the impact of a fire, should it occur. Wildfire hazards do not exist at the STP 3 & 4 site. Fire protection of the UHS is in accordance with NFPA 214, Standard for Water-Cooling Towers. The RSW pump house is provided with area fire detection in accordance with NFPA 72, National Fire Alarm Code, with manual fire protection provided by portable fire extinguishers located and installed per NFPA 10, Standard for Portable Fire Extinguishers. Additional manual fire fighting protection is also provided by area yard hydrants located and installed per NFPA 24, Standard for the Installation of Private Fire Service Mains and Their Appurtenances.

See Subsection 9.5.13.18 for discussion of safe shutdown following a complete burnout of a fire area/division.

9.5.13.10 HVAC Pressure Calculations

The following standard supplement addresses COL License Information Item 9.27.

HVAC systems described in ABWR DCD Subsection 9.5.1.1.6 are designed with features for the dual purpose of HVAC and smoke control. The building HVAC system, when operating in smoke removal mode, is designed and calculated to achieve

directional flows into the smoke removal path in order to preclude migration of products of combustion into clean areas external to the fire-affected area.

The method described in Appendix A of NFPA 92A will be used to determine the required differential pressure value during the detailed design phase. (COM 9.5-10)

A pre-operational test procedure and acceptance criteria, as recommended in NFPA 92A Chapter 4 to confirm the capability of the smoke control mode of the HVAC systems as designed and calculated will be developed. Pre-operational testing of HVAC systems, that includes verification of its performance and confirmation of the required differential pressure in smoke removal mode will be performed prior to fuel load. (COM 9.5-17)

9.5.13.11 Plant Security Systems Criteria

The following site-specific supplement addresses COL License Information Item 9.28.

The evaluation to ensure that the plant security system design does not create the potential for adverse impacts on plant operations, testing, and maintenance and that communications coverage with security alarm stations, is accomplished as a component of the in-process engineering design effort and specification development for the plant security systems.

This evaluation will depend in part on a program for issuance and control of vital area keys to those operations personnel relied upon for unrestricted plant access for both normal and emergency local operation including access by members of the fire brigade. When necessary, operations personnel provided vital area keys are available to support other departments in achieving timely access for emergency maintenance, testing and health physics activities.

Communications coverage from all areas of the nuclear island to the central and secondary alarm stations will be evaluated and, to the extent practical, provided. Based on STPNOC experience with Unit 1 & 2 there are a limited number of areas, such as high radiation areas or inside the inerted primary containment, where communications coverage is not practical. (COM 9.5-16).

Relevant design provisions include:

- The potential for use of portable security radios to interfere with plant monitoring equipment or for electromagnetic interference to adversely impact the as-built security alarm or access systems is addressed as part of the comprehensive Electromotive Compatibility (EMC) compliance plan discussed in Tier 1 Section 3.4.B and associated ITAAC in Table 3.4, Design Commitment No. 12.

- The STP 3 & 4 design utilizes the alternate AC combustion turbine generator (CTG) to provide emergency backup power to security lighting in the minimum isolation zone and the protected area. The CTG and related auxiliaries, including fuel oil tanks, are located wholly within the protected area and are therefore not

subject to sabotage from outside the protected area. No additional evaluation is required.

9.5.13.12 Not Used

9.5.13.13 Diesel Fuel Refueling Procedures

The following standard supplement addresses COL License Information Item 9.30.

Procedures to verify that the day tank is full prior to refilling the storage tank will be developed following procurement of equipment but prior to fuel load. This procedure will reduce the possibility of sediment obstruction of fuel lines and harmful impacts on diesel generator operation. (COM 9.5-11)

9.5.13.14 Portable and Fixed Emergency Communication Systems

The following site-specific supplement addresses COL License Information Item 9.31.

The design of the portable radio communication system and the fixed emergency communication system complies with BTP CMEB 9.5-1, position C.5.g (3) and (4) as discussed below.

Emergency communications for STP 3 & 4 are discussed in the Emergency Plan. The communication system is designed in such a way that at any given moment, adequate onsite and offsite portable and fixed communication means are available for both normal and emergency conditions. The STP 3 & 4 communication system consists of the following systems and special equipment and communication lines:

Telephone System

This system provides a means for routine and emergency communications between plant personnel, and with outside agencies for safe plant operation, fire fighting administration, and shutdown of the plant. Includes onsite PBX (private branch exchange) telephone system, private business lines, trunk connections with local telephone utility central office, multiplexed telephone circuits through the CenterPoint Energy private regional microwave system, two EPBX (electronic private branch exchange) switching facilities in Nuclear Support Center (NSC) and the Emergency Operations Facility (EOF). Each fire area containing safe shutdown equipment shall, as a minimum, have one fixed telephone.

Portable Radio Communications System

This system is comprised of two way radio and radio paging systems. The two way radio system provides wireless communications within the plant, and with offsite agencies for safe operation, fire fighting, security, administration, and shutdown of the plant. The radio paging system provides radio paging to individuals or groups in one or more or all plant areas simultaneously. The plant portable radio communications system interfaces with the security system by providing communications for various security areas at the plant. Design of the plant portable radio communications system precludes interference with the communication capabilities of the plant security force.

The two way radio system consists of repeater base stations, control base stations, mobile radio units, hand-held portable radio units, and a lossy loop antenna system. A lossy loop antenna system is provided for radio coverage within power block buildings. In the event of major failure of any repeater, a talk-around channel is provided on control base stations, mobile units, and hand-held portables. This allows limited direct unit-to-unit communication between control bases, mobile units, and portables. Portables that must be used in high noise level areas (90 db ambient) are provided with a jack, plug, and noise cancelling headsets. Fixed repeaters installed to permit use of portable radio communication units are protected from exposure fire damage.

The radio paging system consists of paging transmitters, counter top paging terminal, and portable pocket pagers. Lossy loop antennas and repeaters are utilized to provide paging coverage within the power block. A paging call can be initiated by an attendant through a countertop paging terminal. In addition, a paging terminal telephone interface allows designated individuals with specified telephone instruments the capability to select and call any pocket pager unit.

Microwave System Interface

Microwave equipment at STP 3 & 4 is part of the system wide Reliant Energy Microwave System. The microwave system provides offsite access to Reliant Energy telephone system, dispatcher, corporate offices, paging system; and to outside agencies. It interfaces with the STP 3 & 4 telephone system, selected dedicated lines and two-way radio system.

Public Addressing (PA) Paging/Alarm System

This system provides a means for plant wide broadcasting of routine and emergency information, such as fire alarms, the Reactor Containment Building (RCB) evacuation alarm, and the Perimeter Evacuation or Radiation Emergency Alarm. PA system (see Subsection 9.5.2.2.1) may be accessed from any Operator Communication Panel (OCP) or any plant telephone by using a valid authorization code. Plant emergency and fire alarm signals are routed through the PA system. Designated alarm actuation pushbuttons are provided on OCPs.

Maintenance Jack System (DC/Sound-Powered)

This system provides for communication among personnel performing periodic maintenance, emergency safe shutdown and fire fighting operations. This is accomplished through the location of maintenance jack stations at selected locations throughout the plant. Each jack station consists of two or three jacks for use with electrosound telephones and one jack that is reserved for sound powered telephones. A sectionalizing panel is provided in the control room of each unit to patch phone jacks together to establish communications between areas as necessary. Each fire area shall, as a minimum, have one sound powered phone jack.

Refueling Communications System

This system provides a direct and exclusive means of communications between the control room operator and designated points in the Fuel Handling and Reactor

Containment Buildings during fueling and refueling operations. Primary communications for fueling and refueling activities is by wireless headset system. Two DC-powered jacks and sound-powered circuit similar to the maintenance jacks are available at each station for backup. Telephone circuits and two-way radios are also usable if needed for refueling communications.

Operator Communications Panel Consoles (OCP)

OCPs provide plant operators with access to onsite/offsite telephone systems, two-way radio channels, radio pager system, activation of the plant emergency and fire alarm signals, and the public address system. OCPs are installed in the control rooms, auxiliary shutdown panel rooms, operation support centers, technical support centers, emergency operations facility, security force supervisor's office, simulator, maintenance office facility, and central and secondary alarm stations. The OCPs located in the central and secondary alarm stations support normal day-to-day and emergency communications requirements by providing security operators with access to onsite/offsite telephone systems, radio channels assigned to security, and the PA paging system.

Special Service Telephone Lines

This system provides offsite direct access to NRC, state and county authorities, and to other nuclear plants during declared emergency. These telephone lines bypass the onsite PBX system and routed directly to specific telephones located in critical areas of the plant and support facilities. Special service (emergency) telephones are color-coded ("Red Phone") to distinguish them from normal telephones. Special Service Telephone Lines include the following: Emergency Notification System (ENS) – a telephone circuit provided by the NRC for notification of the declared emergency and to maintain voice communication with the NRC operations center; Health Physics Network (HPN) - a telephone circuit provided by the NRC for communications with the NRC Health Physics Section and /or other nuclear power plants during a declared emergency; State/County ringdown line – provided to notify State and County officials of a declared emergency.

9.5.13.15 Identification of Chemicals

The following site-specific supplement addresses COL License Information Item 9.32.

For those fire areas utilizing liquid insulated transformers, features will be provided to prevent the insulating liquid from becoming an unacceptable health hazard to workers in the event of release of the material to the building environment. (COM 9.5-12)

There are no chemical storage areas in the Reactor or Control Buildings, except small quantities of chemicals, operations and maintenance consumables, may be stored in listed or approved cabinets and containers for immediate use. The type and location of those materials will be identified and incorporated in the final Fire Hazards Analysis prior to fuel load. (COM 9.5-13)

9.5.13.16 NUREG/CR-0660 Diesel Generator Reliability Recommendations

The following site-specific supplement addresses COL License Information Item 9.33.

STP satisfies NUREG/CR-0660 recommendations by developing programs for training, preventive maintenance, and root-cause analysis of component and system failures. (COM 9.5-14)

9.5.13.17 Sound-Powered Telephone Units

The following standard supplement addresses COL License Information Item 9.34.

The sound-powered telephone units will be provided before fuel load for use in conjunction with the system described in Subsection 9.5.2.2.2. (COM 9.5-15).

9.5.13.18 Fire-Related Administrative Controls

The following site-specific supplement addresses COL License Information Item 9.35.

The Fire Protection Program is described in Appendix 9E.

9.5.13.19 Periodic Testing of Combustion Turbine Generator (CTG)

The following departure and standard supplement address COL License Information Item 9.36.

STD DEP 8.3-1

(1) *For each ~~6.9~~ 4.16 Kv emergency bus (staggered among the three buses at 18-month intervals), verify the CTG starts and energizes the bus within 10 minutes and energizes all required loads (as defined in the "LOCA-Loads" section of Table 8.3-4) within 15 minutes. The steady-state CTG voltage and frequency shall be ~~≥6210 V and ≤7590 V, and ≥58.8 Hz and ≤61.2 Hz~~ 13.8 kV ± 10% and 60Hz ± 2%. All CTG starts may be preceded by an engine prelube period.*

(2) *The operator can accomplish this from the main control room.*

(3) *One Class 1E circuit breaker and ~~one~~ four non-Class 1E circuit breaker~~s~~ exist and are functional between each of the Class 1E diesel generator buses and the CTG. (Note that ~~only the circuit breakers for the preselected division are racked in. The remaining two divisions have their Class 1E breakers normally racked out, as shown in Figure 8.3.1both~~ the Class 1E and non-Class 1E breakers, which provide the connection from the CTG bus to the diesel generator buses, are normally open and ~~they~~ have no automatic function. The operator must manually align ~~the CTG to the diesel generator buses~~ this connection.)*

(4) *Each 92 days, verify the combustion turbine generator (CTG) starts and achieves steady state voltage (~~≥6210 V and ≤7590 V~~ 13.8 kV ± 10%), and frequency (~~≥58.8 Hz and ≤61.2 Hz) within 2~~ 60 Hz ± 2%) in less than 10*

minutes. Load the CTG to ≥90% and ≤100% of its continuous rating and operate it with this load for at least 60 minutes. All CTG starts may be preceded by an engine prelube period.

The revised test requirements are incorporated in the Technical Requirements Manual and included in testing procedures prepared prior to fuel load. The Technical Specifications include the functional testing requirements and test frequencies for the CTGs necessary to support completion times allowed in TS 3.8.1, AC Sources-Operating.

9.5.13.20 Operating Procedures for Station Blackout

The following site-specific supplement addresses COL License Information Item 9.37.

The station blackout procedure(s) will provide the direction to:

(1) Operate the Alternate AC-CTG during an SBO event

(2) Restore other plant offsite (preferred) and onsite emergency power sources as soon as possible

(3) Recover plant HVAC Systems as soon as possible to limit heat increase

(4) Provide additional core, containment, and vital equipment makeup and cooling services, as necessary

(5) Establish orderly plant safe shutdown conditions

(6) Severe weather guidelines will be developed consistent with the guidelines of NUMARC 87-00, Section 4.2.3. Deviation may be authorized from the NUMARC 87-00 criteria for grid conditions where a shutdown may increase the likelihood of a loss of offsite power.

The station blackout procedure(s) will be developed consistent with the plant operating procedure development plan in Section 13.5. (COM 1C-1)

9.5.13.21 Quality Assurance Requirements for CTG

The following standard supplement addresses COL License Information Item 9.38.

The STPNOC Quality Assurance Program Description (QAPD) referenced in Section 17.5S has incorporated the Quality Assurance requirements of Regulatory Position 3.5 and Appendix A to RG 1.155 into the QAPD Part III, Nonsafety-Related SSC Quality Control, Section 2 Nonsafety-Related SSCs Credited for Regulatory Events. These requirements are translated into implementing procedures.

Table 9.5-5 Summary of Automatic Fire Suppression Systems

Bldg.	Elev	Room No.	Fire Area	Area Name	Div	Combustible	Sprinkler System Type
PY	7350	N/A	N/A	Unit Auxiliary Transformer	ND	Oil	Deluge water
PY	7350	N/A	N/A	Main Transformer Area	ND	Oil	Deluge water
PY	7350	N/A	N/A	Reserve Transformer	ND	Oil	Deluge water
RB	-8200	133	F1300	CRD Pump Room	ND	Class III B lube oil & cables	Dry pipe, closed head
RB	12300	412	F4100	Diesel Generator A Room	D1	Fuel oil, Lube oil, & cables	Preaction foam-water
RB	12300	423	F4200	Diesel Generator B Room	D2	Fuel oil, Lube oil, & cables	Preaction foam-water
RB	12300	432	F4300	Diesel Generator C Room	D3	Fuel oil, Lube oil, & cables	Preaction foam-water
RB	23500	610	F6101	Diesel Generator Fuel Tank A Room	D1	Diesel fuel	Deluge foam-water
RB	23500	620	F6201	Diesel Generator Fuel Tank B Room	D2	Diesel fuel	Deluge foam-water
RB	23500	630	F6301	Diesel Generator Fuel Tank C Room	D3	Diesel fuel	Deluge foam-water
RW	~~1600~~ **12300**	N/A	N/A	Dry Radioactive Waste Storage Area	ND	Radioactive material	Wet pipe sprinkler
~~RW~~	~~7300~~	~~N/A~~	~~N/A~~	~~Dry Radioactive Waste Storage Area~~	~~ND~~	~~Radioactive material~~	~~Wet pipe sprinkler~~
~~RW~~	~~-200~~	~~N/A~~	~~N/A~~	~~Dry Radioactive Waste Storage Area~~	~~ND~~	~~Radioactive material~~	~~Wet pipe sprinkler~~

Table 9.5-5 Summary of Automatic Fire Suppression Systems

Bldg.	Elev	Room No.	Fire Area	Area Name	Div	Combustible	Sprinkler System Type
~~RW~~	~~6500~~	~~N/A~~	~~N/A~~	~~Dry Radioactive Waste Storage Area~~	~~ND~~	~~Radioactive material~~	~~Wet pipe sprinkler~~
TB	~~350~~ **2300**	~~120~~**N/A**	FT1500	Beneath the Turbine surroundings	ND	Lubricants~~, charcoal~~ & cables	Wet pipe sprinkler
~~TB~~	~~7350~~	~~222~~	~~FT1500~~	~~Beneath the Turbine Surroundings~~	~~ND~~	~~Lubricants, & cables~~	~~Wet pipe sprinkler~~
TB	~~7350~~ **6300**	230	FT2500	Lube Oil Conditioning Area	ND	Class III B lube oil	Deluge foam-water
TB	~~7350~~ **6300**	247	FT2503	House Boiler Area	ND	~~Lubricants, Fuel oil &~~ **Lubricants &** cables	~~Preaction~~**Wet pipe** sprinkler
TB	~~15350~~ **12300**	317 & **2X8**	FT3500	Gas Turbine Generator	ND	*Diesel fuel* **& Class III B lube oil**	Deluge foam-water
TB	~~15350~~ **19700**	~~320~~**3X2**	~~FT1500~~ **FT35X9**	~~TCW Pumps Area~~ **Hydrogen Seal Oil Skid Area**	ND	Hydrogen seal oil	Deluge foam-water
TB	**19700**	**330**	**FT3501**	**Lube Oil Reservoir Area**	**ND**	**Class III B lube oil**	**Deluge foam-water**
TB		**122**	**FT1503**	**Stairwell No. 2**	**ND**		**Wet pipe sprinkler**
TB		**249**	**FT2504**	**Stairwell No. 4**	**ND**		**Wet pipe sprinkler**
TB		**1X3**	**FT15X1**	**Stairwell No. 6**	**ND**		**Wet pipe sprinkler**
TB		**1X4**	**FT15X2**	**Stairwell No. 7**	**ND**		**Wet pipe sprinkler**
TB	**6300**	**N/A**	**FT1500**	**Beneath Turbine surroundings**	**ND**	**Lubricants & Cables**	**Wet pipe sprinkler**
TB		**114**	**FT1502**	**Stairwell No. 1**	**ND**		**Wet pipe sprinkler**
TB		**212**	**FT2502**	**Stairwell No. 3**	**ND**		**Wet pipe sprinkler**
TB		**1Y5**	**FT15Y1**	**Stairwell No. 8**	**ND**		**Wet pipe sprinkler**
TB		**250**	**FT15Y2**	**Elevator Shaft**	**ND**	**Lubricants & Cables**	**Wet pipe sprinkler**
TB	**6300**	**1Y1**	**FT15Y3**	**Lube Oil Storage Tank Area**	**ND**	**Class III B lube oil**	**Deluge foam water**
TB	**6300**	**232**	**FT1501**	**HNCW Chiller Area**	**ND**	**Lubricants & Cables**	**Wet pipe sprinkler**
TB	**6300**	**111**	**FT1501**	**Instrument & Service Air Equip.**	**ND**	**Lubricants & Cables**	**Wet pipe sprinkler**

Table 9.5-5 Summary of Automatic Fire Suppression Systems

Bldg.	Elev	Room No.	Fire Area	Area Name	Div	Combustible	Sprinkler System Type
TB	6300	1Y2	FT1501	Breathing Air Equipment Area	ND	Lubricants & Cables	Wet pipe sprinkler
TB	6300	232	FT15Y4	EHC Hydraulic Power Unit Area	ND	Class III B hyd. fluid	Deluge foam water
TB	12300	N/A	FT1500	Beneath Turbine surroundings	ND	Lubricants & Cables	Wet pipe sprinkler
TB	12300	2X5	FT25X1	CTG Switchgear Area	ND	Electrical Cables	Wet pipe sprinkler
TB	12300	210	FT25X3	Switchgear Room 'A'	ND	Electrical Cables	Wet pipe sprinkler
TB	19700	N/A	FT1500	Beneath Turbine surroundings	ND	Lubricants & Cables	Wet pipe sprinkler
TB	19700	31X-2	FT35X1	LPCP Switchgear Room	ND	Electrical Cables	Wet pipe sprinkler
TB	19700	310	FT35X8	Switchgear Room 'B'	ND	Electrical Cables	Wet pipe sprinkler
TB	19700	3X9	FT35X7	Electrical Equipment Area	ND	Electrical Cables	Wet pipe sprinkler
TB	19700	3X4	FT35X3	250VDC Battery Room	ND	Electrical Cables	Wet pipe sprinkler
TB	19700	3X5	FT35X2	250VDC Battery Room	ND	Electrical Cables	Wet pipe sprinkler
TB	19700	3X6	FT35X4	125VDC Battery Room 'A'	ND	Electrical Cables	Wet pipe sprinkler
TB	19700	3X7	FT35X5	125VDC Battery Room 'B'	ND	Electrical Cables	Wet pipe sprinkler
TB	19700	3X8	FT35X6	125VDC Battery Room 'C'	ND	Electrical Cables	Wet pipe sprinkler
TB	27800	N/A	FT1500	Above Turbine surroundings	ND	Lubricants & Cables Wet pipe sprinkler	
TB	27800	N/A	FT1500	Turbine Generator Bearings	ND	Class III B lube oil	Closed head preaction spray
TB	27800	N/A	FT1500	Beneath Turbine skirt	ND	Class III B lube oil	Wet pipe sprinkler
TB		4X5	FT45X1	Stairwell No. 9	ND		Wet pipe sprinkler
TB	38300	N/A	FT1500	Above Turbine surroundings	ND	Lubricants & Cables	Wet pipe sprinkler
TB		5X1	FT55X1	Stairwell No. 10	ND		Wet pipe sprinkler

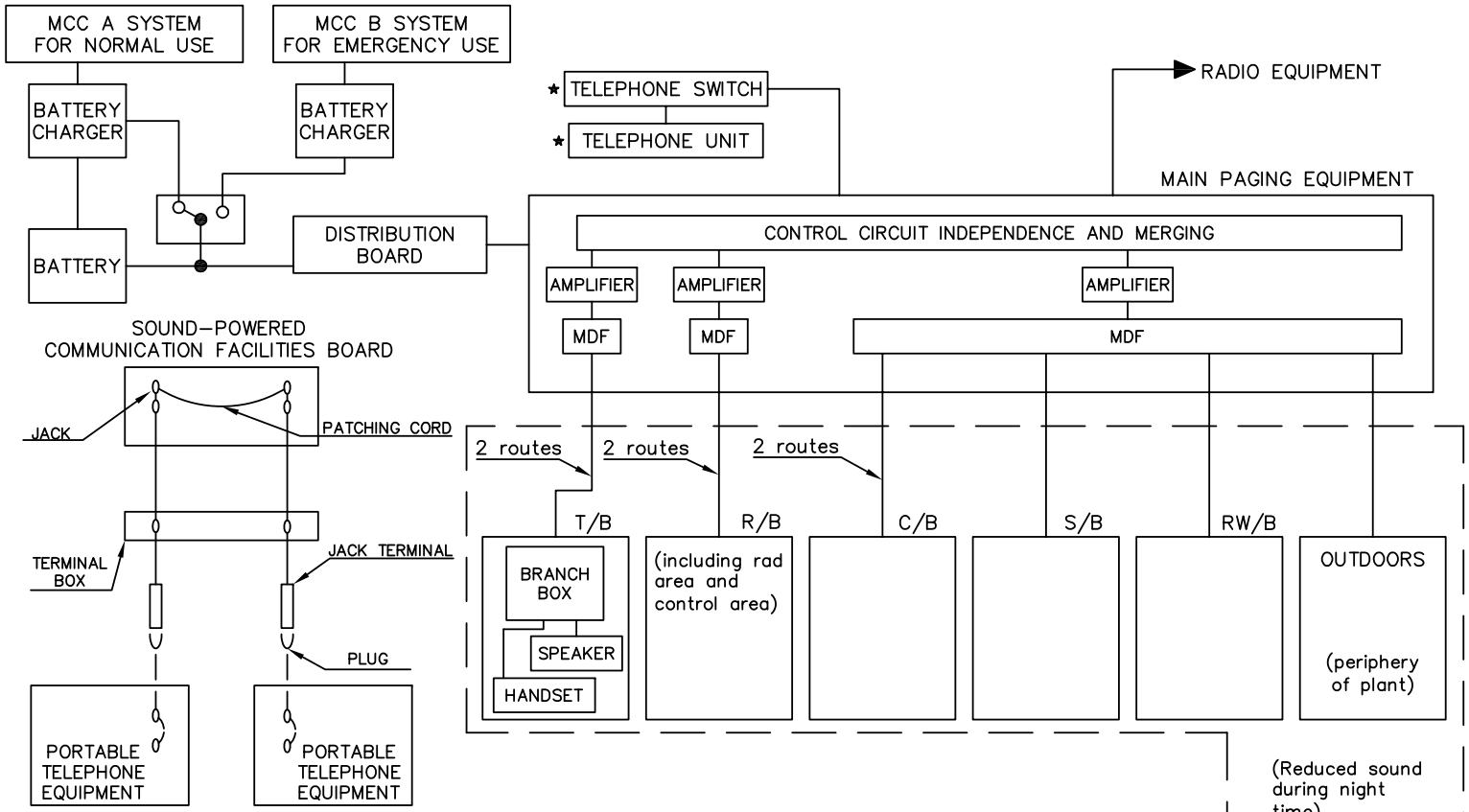

(NOTES) 1. MDF : MAIN DISTRIBUTING FRAME
~~2. SOLID LINES INDICATE THE EXTENT OF ABWR STANDARD PLANT SCOPE~~
2. DOTTED LINES SHOW THAT PART OF A UNIT'S PAGING EQUIPMENT THAT IS DUPLICATED IN THE OPPOSITE UNIT
3. ★ INDICATES EQUIPMENT THAT MAY BE SHARED BETWEEN UNITS

Figure 9.5-2 Outline - Telephonic Communication System for Single Unit of STP 3 or 4

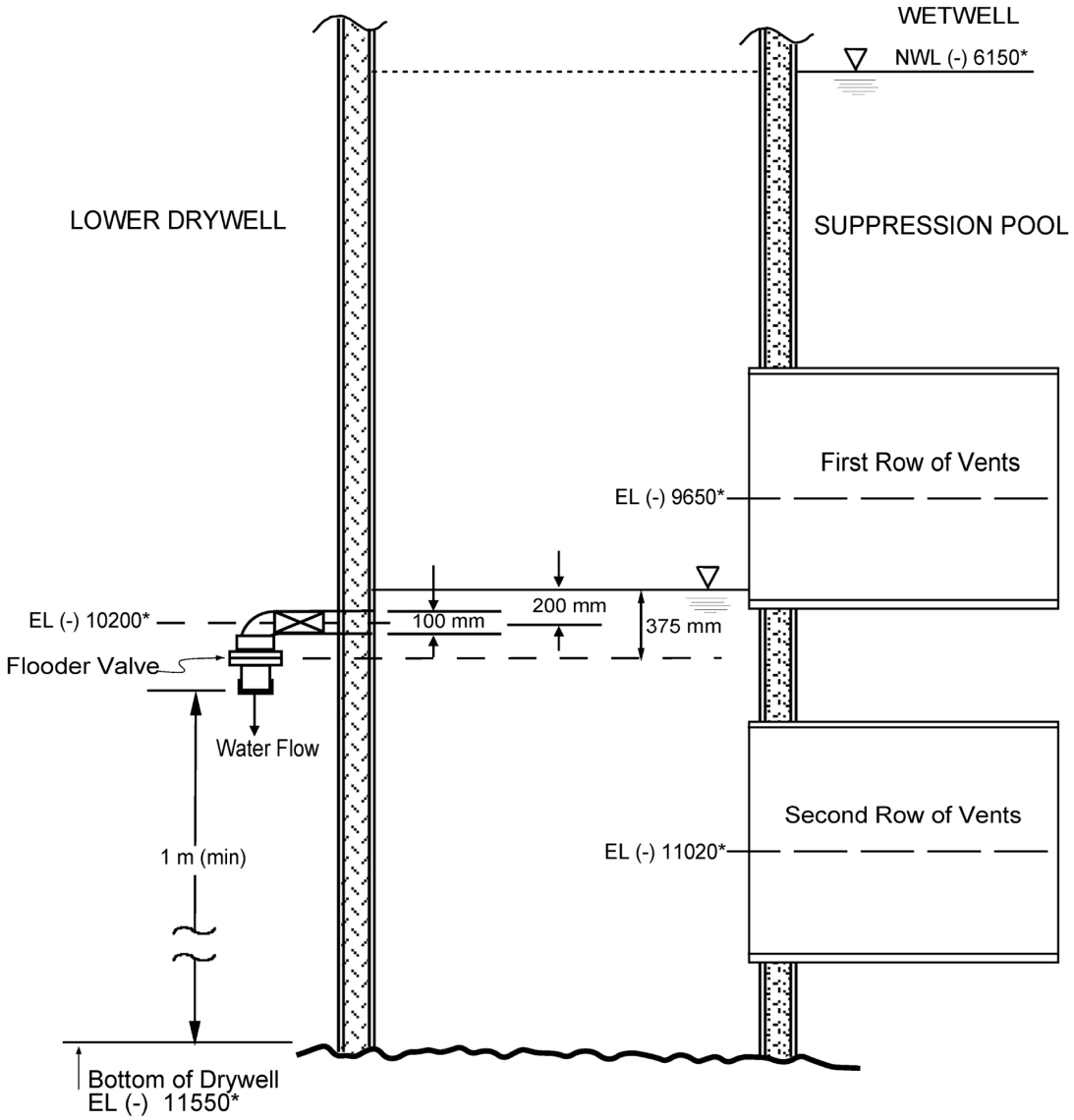

* Elevations based on RPV bottom at EL 0. All dimensions in millimeters.

Figure 9.5-3 Lower Drywell Flooder System Arrangement/Configuration

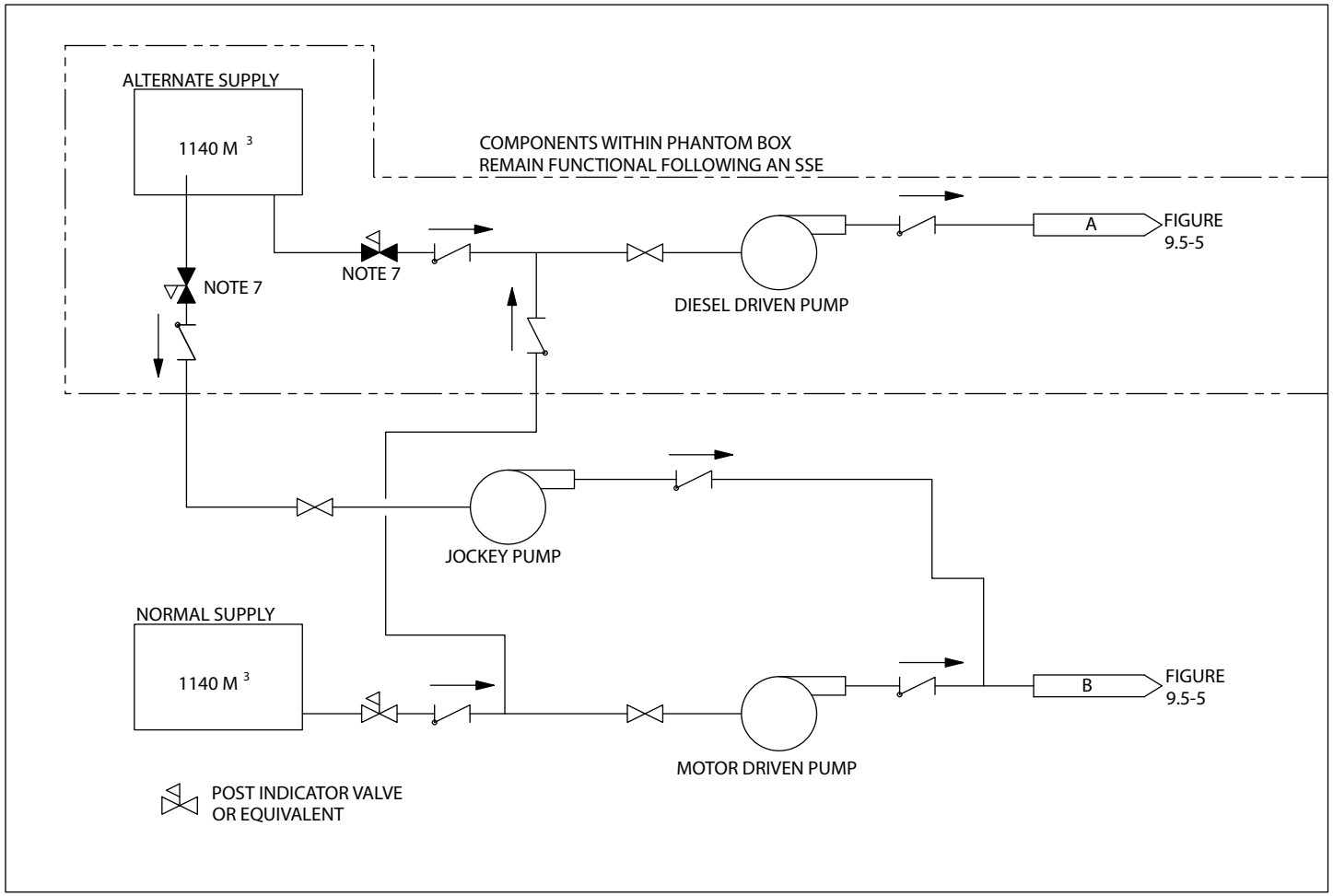

Figure 9.5-4 Fire Protection Water Supply System

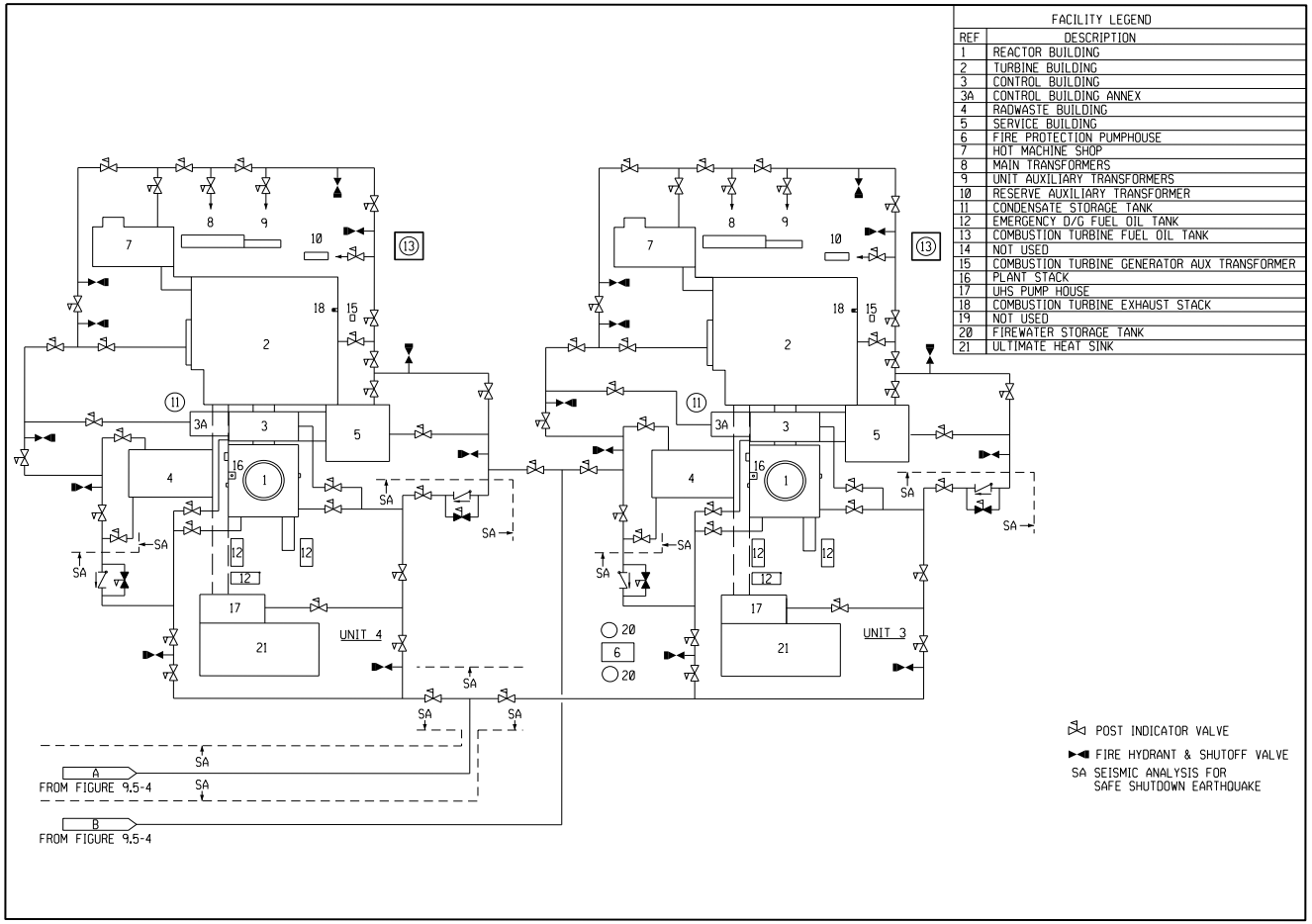

Figure 9.5-5 Fire Protection Yard Main Piping

9A Fire Hazards Analysis

The information in this appendix of the reference ABWR DCD, including all subsections, tables, and figures, as modified by the STP Nuclear Operating Company Application to Amend the Design Certification rule for the U.S. Advanced Boiling Water Reactor (ABWR), "ABWR STP Aircraft Impact Assessment (AIA) Amendment Revision 3," dated September 23, 2010 is incorporated by reference with the following departures and supplement to 9A.1 Introduction. Additionally, the Fire Hazards Analysis for the Turbine Building in Section 9A.4.3 is replaced in its entirety.

STD DEP T1 2.4-1 (Table 9A.6-2)

STD DEP T1 2.4-3 (Table 9A.6-2)

STD DEP T1 2.14-1 (Figure 9A.4-4, Figure 9A.4-9, Table 9A.6-2)

STD DEP T1 3.4-1 (Figure 9A.5-2)

STD DEP 1.2-1 (Table 9A.6-3)

STP DEP 1.2-2 (Figures 9A.4-17 through 9A.4-21, 9A.4-33, 9A.4-34, Table 9A.6-4)

STD DEP 11.5-1

STD DEP 3.8-1 (Figures 9A.4-28 through 9A-4-32)

STP DEP 9.5-7

STD DEP Admin

9A.1 Introduction

As stated in Fire Protection System ITAAC (Tier 1, Section 2.15.6), a fire hazards report will exist for the as-built plant which concludes that, for each postulated fire, the plant can be shut down and maintained in a safe shut down condition.

Such fire hazards report will reflect the final plant layout, purchased equipment type, quantity, and final location, cable routing, and distribution of other combustibles, after as-built drawings are prepared and verified.

The preparation of the fire hazards report will take into consideration the following recognized departures from the certified ABWR design:

- Approved departures made in conjunction with changes to the Turbine Building general arrangement
- Approved departures made in conjunction with changes to the Radwaste Building general arrangement
- Other approved departures as documented in COLA Part 7 (includes complete list and description of departures from certified ABWR DCD) which can have impact

on fire zoning, fire loading, location of safety-related structures, equipment and components and which affect the fire hazards analysis

The above departures will be reviewed using the same criteria used in the certified ABWR design. These criteria consider potential fire hazards and assess the effect of postulated fires on the ability to shutdown and cooldown the reactor to a cold shutdown condition; each postulated fire will be documented in the fire hazard report. (COM 9A-1)

9A.4 Analysis

STD DEP T1 2.4-3

STD DEP T1 2.14-1 (Figure 9A.4-4, Figure 9A.4-9)

STD DEP T1 3.4-1

STP DEP 1.2-2 (Figures 9A-4-17 through 9A-4-21, 9A.4-33, 9A.4-34, Table 9A.6-4)

STD DEP 3.8-1 (Figures 9A.4-28 through 9A-4-32)

9A.4.1.1.4 RCIC Room A (Rm No. 112)

(5) Combustibles Present:

Fire Loading	*Total Heat of Combustion (MJ)*
17 m of divisional cable trays containing 14 kg/m of XLPE-FR cable insulation	*727 MJ/m^2, NCLL (727 MJ/m^2 maximum average) applies.*
~~*106 liters of Class III B lube oil.*~~	~~*4.6 x 10^3*~~

(13) Remarks:

(a) The room contains electrical cables in trays. Cable insulation in trays is discussed in Subsection 9A.3.4.

(b) Not Used

9A.4.1.3.3 Emergency Electric Room A (Rm No. 310)

(1) Fire Area—F3100

(2) Equipment: See Table 9A.6-2

Safety-Related	*Provides Core Cooling*
Yes, D1	*Yes, D1*

(3) Radioactive Material Present—None.

(4) Qualifications of Fire Barriers—Floor, the exterior wall common with corridor (clean area for personnel access) leading to the control building, the wall common with RIP panel room (Rm 315), the wall common with the elevator and the stairwell, the wall common with corridor A (Rm 311), the wall common with corridor D (Rm 344), the wall common with room 342, the wall common with ~~division 4 multiplexing~~ Remote Digital Logic Controller room (Rm 381), and the ceiling which is in common with fire area F4900, F4100, F4101, F4102 on the 12300 mm level, and Fire area F1200 on the 8500 mm level are of 3 h fire-resistive concrete construction. The remainder of the walls are concrete and are not rated as they are internal to fire area F3100. There is one 3 h fire-resistive double door which provides access from the control building, and one 3 h fire resistive door which provides access to ~~division 4 multiplexing~~ Remote Digital Logic Controller room.

9A.4.1.3.21 Emergency Electrical Room B (Rm No. 326)

(4) Qualifications of Fire Barriers—The wall common with the emergency electrical room C (Rm 337), the wall common with corridor C (Rm. 335), the wall common with ~~the~~ corridor B (Rm 321), the portion of the wall common with elevator and stair tower 3, the wall common with the RIP Panel Room (320), the exterior wall, the floor and the ceiling are of 3 h fire-resistive concrete construction. Two 3 h fire-resistive double doors provide access and egress from ~~the~~ emergency electrical room C (Rm 337) and the RIP Panel room (Rm 320). Two piping spaces ~~are entered to~~enter this room at elevation 10300 mm ~~to facilitate the FCS piping to the next elevation~~. The walls of these piping spaces are fire barrier of 3 h fire resistive concrete construction.

9A.4.1.3.27 Corridor D (Rm No. 344)

(4) Qualifications of Fire Barriers—The wall common with RPV instrument rack IV room (Rm345), The wall common with RIP Panel room (Rm 340), The wall common with Remote Shutdown Panel Rooms (RM 341 and Rm 383), The wall common with division 4 ~~Remote Multiplexing~~ Remote Digital Logic Controller unit room (Rm 381) and portion of the wall common with Emergency Electrical Room A (Rm 310), the wall common with room 342, and portion of the ceiling which is in common with fire area F3400 on the 8500 mm level are fire barriers and are of 3 h fire-resistive concrete construction. Primary containment acts as one wall of the room. The remainder of the walls, the remainder of the ceiling, and the floor are concrete and are not rated as they are internal to fire area F1200. Access to the corridor is provided from corridor B (Rm. No. 321) via an open direct connection, and from room 342 via a 3 hour fire-resistive door.

9A.4.1.3.28 RIP Panel A Room (Rm No. 340)

(4) Qualifications of Fire Barriers—Floor, the building exterior wall, the wall common with Remote Shutdown Panel Room A (Rm 341), the wall common with division 4 ~~Remote multiplexing~~ Remote Digital Logic Controller Unit (Rm 381), the wall common with corridor D (Rm 344), The wall common with elevator No.4, and portion of the ceiling which is common to fire area F4201 are of 3 h fire-resistive concrete construction. The remaining walls, and the remainder of ceiling are concrete and are not rated as they are internal to fire area F3200. Access to the room is provided via a 3 h fire-resistive double door from the corridor (R/B clean area) leading to control building, and via a direct opening from room 320.

9A.4.1.3.38 Division 4 ~~Remote Multiplexing~~ Remote Digital Logic Controller Room (Rm No. 381)

9A.4.1.4.8 Corridor C (Equipment Entry) (Rm No. 430A and 430B)

(4) Qualifications of Fire Barriers—Room 430 is divided into rooms 430A and 403B. Room 430B provides a separate fire area F4303 between room 430A (fire area F4301) and room 410 (fire area F4101). There is a 3-hour fire rated door at each end of room 430B providing a vestibule between room 430A and room 410. The floors and walls of room 430B serve as fire barriers and are of 3-hour fire-resistive concrete construction. The ceiling of room 430B is not rated as it is common to room 530B above within fire area F4303. Room 430B provides access to ECCS Valve Room C (Rm 431) via a 3-hour fire-rated door. The walls common with the C diesel generator room (Rm 432), valve room (C) (Rm 431), corridor B (Rm 420), ~~the Flammability Control System room (Rm 436)~~ and the exterior wall serve as fire barriers and are of 3 h fire-resistive concrete construction. The floor of room 430A is also a fire barrier to limit the size of the fire areas below and to protect the lower regions of the building, which contains the majority of the ESF equipment. The walls of room 430A are concrete and are not rated as they are internal to fire area F4301. A section of the ceiling common to fire areas F4300, F1300 and F3300 above is of 3 h fire-resistive concrete construction. The remainder of the ceiling is not fire rated as it is internal to fire area F4301. Access to corridor A room 430A is provided from room 430B and corridor B (Rm 420) via 3 h fire-resistive doors. Room 430A provides direct access to the electrical and instrumentation penetration room (Rm 433) through a non-rated door and valve room (C) (Rm 431) ~~and the Flammability Control System room (Rm 436)~~ through a 3 h fire-rated door. There is an open hatch in Room 430A to the floors above. A large steel non-fire-rated door provides access to the reactor building for moving in fuel and other large loads.

9A.4.1.4.11 ~~Flammability Control System Room (Div. 3) (Rm No. 436)~~Not Used

~~(1) Fire Area – F4320~~

~~(2) Equipment: See Table 9A.6-2~~

~~Safety Related~~	~~Provides Core Cooling~~
~~Yes, D1, and D2~~	~~No~~

~~(3) Radioactive Material Present – None that can be released as a result of fire.~~

~~(4) Qualifications of Fire Barriers – The floor and interior and exterior walls are fire barriers and are of 3-h fire-resistive concrete construction. The ceiling is formed by the bottom of the spent fuel storage pool (F4301) and is a 3-h fire barrier. Personnel access is provided via a 3-h fire-resistive door from corridor C (Rm 430).~~

~~(5) Combustibles Present:~~

~~(6) Detection Provided – Class A supervised POC in the room and manual alarm~~

~~Fire Loading~~	~~Total Heat of Combustion (MJ)~~
~~Cable Tray~~	~~727 MJ/M^2 NCLL (727 MJ/M^2 maximum average) appplies~~

~~pull station at Col. 5.9-F.2 and 2.1-F.1.~~

~~(7) Suppression Available~~

~~(8) Fire Protection Design Criteria Employed:~~

~~Type~~	~~Location/Actuation~~
~~Standpipe and hose reel~~	~~Col. 2.2-F.1/Manual~~
~~ABC hand extinguishers~~	~~Col. 2.1-F.1/Manual~~

~~(a) The function is located in a separate fire resistive enclosure.~~

~~(b) Fire detection and suppression capability is provided and accessible.~~

~~(9) Consequences of Fire – The postulated fire assumes the loss of the function.~~

~~Smoke from a fire will be removed by the EHVAC(B) system operating in its smoke removal mode.~~

~~(10) Consequences of Fire Suppression – Suppression extinguishes the fire. Refer to Section 3.4, "Water Level (Flood) Design", for the drain system.~~

~~(11) Design Criteria Used for Protection Against Inadvertent Operation, Careless Operation or Rupture of the Suppression System:~~

~~(a) Location of the manual suppression system external to the room~~

~~(b) Provision of raised supports for the equipment~~

~~(c) Refer to Section 3.4, "Water Level (Flood) Design", for the drain system.~~

~~(d) ANSI B31.1 standpipe (rupture unlikely)~~

~~(12) Fire Containment or Inhibiting Methods Employed:~~

~~(a) The functions are located in a separate fire-resistive enclosure.~~

~~(b) The means of fire detection, suppression and alarming are provided and accessible.~~

~~(13) Remarks—None.~~

9A.4.1.4.12 Corridor B (Rm No. 420)

(4) Qualifications of Fire Barriers—The walls common with ~~the Flammability Control System Room (Rm 425),~~ the elevator and stair well walls, the Diesel Generator B Room (Rm 423) and the ECCS Valve B Room (Rm 421) serve as fire barriers and are of 3 h fire-resistive concrete construction. The floor is also a fire barrier to limit the size of the fire areas below and to protect the lower regions of the building, which contain~~s~~ the majority of the ESF equipment. The walls common with the E and I Penetration Room (Rm 422) and the ceiling are fire-resistive concrete but are nonrated as they are internal to fire area F4201. Access to the corridor is provided from corridor D (Rm 445), corridor C (Rm 430) and stairs and elevator No.3. A 3 h fire damper is installed in the HVAC duct (located next to the elevator) where it passes through the fire barrier floor to the division 2 areas on the level below. This fire barrier divides the division 2 area of the building to limit the magnitude of possible damage due to a single fire.

9A.4.1.4.15 Diesel Generator B Room (Rm No. 423)

(4) Qualifications of Fire Barriers—The building exterior walls, the walls common with Corridor B (Rm 420), the wall common with ~~FCS room (Rm 425),~~ the wall common with stair wells (Rms 193 and 329), and the floor are of 3 h fire resistive concrete construction. The interior partition walls, and ceiling are not fire rated as they are internal to fire F4200. The ceiling of the room is not a fire barrier as the fan room is located directly above this diesel generator room. The exterior wall of the room has a removable section for removal of equipment from the diesel generator room. Access to this room is provided from the Clean Area Access C/D (Rm 426) through a 3 h fire-rated door and through the removable section of the external wall.

9A.4.1.4.27 Not Used

~~(1) Fire Area – F4230~~

~~(2) Equipment: See Table 9A.6-2~~

~~Safety Related~~	~~Provides Core Cooling~~
~~Yes, D2~~	~~No~~

~~(3) Radioactive Material Present – None that can be released as a result of fire.~~

~~(4) Qualifications of Fire Barriers – The floor and interior and exterior walls are fire barriers and are of 3-h fire resistive concrete construction. The ceiling is formed by the bottom of the spent fuel storage pool (F4301) and is a 3-h fire barrier. Access to the room is provided from Corridor B (Rm 420) through with a three-hour fire-rated door.~~

~~(5) Combustibles Present:~~

~~(6) Detection Provided – Class A supervised POC in the room and manual alarm~~

~~Fire Loading~~	~~Total Heat of Combustion (MJ)~~
~~Cable Tray~~	~~272 MJ/m^2 NCLL (727 MJ/m^2 maximum average) applies~~

~~pull station at Col. 2.1-F.1.~~

~~(7) Suppression Available:~~

~~Type~~	~~Location/Actuation~~
~~Standpipe and hose reel~~	~~Col. 2.1-F.1/Manual~~
~~ABC hand extinguishers~~	~~Col. 2.1-F.1/Manual~~

~~(8) Fire Protection Design Criteria Employed:~~

~~(a) The function is located in a separate fire resistive enclosure.~~

~~(b) Fire detection and suppression capability is provided and accessible.~~

~~(9) Consequences of Fire – The postulated fire assumes the loss of the function. Smoke from a fire will be removed by the EHVAC(B) system operating in its smoke removal mode.~~

~~(10) Consequences of Fire Suppression – Suppression extinguishes the fire. Refer to Section 3.4, "Water Level (Flood) Design", for the drain system.~~

~~(11) Design Criteria Used for Protection Against Inadvertent Operation, Careless Operation or Rupture of the Suppression System:~~

~~(a) Location of the manual suppression system external to the room~~

~~(b) Provision of raised supports for the equipment~~

~~(c) Refer to Section 3.4, "Water Level (Flood) Design", for the drain system.~~

~~(d) ANSI B31.1 standpipe (rupture unlikely)~~

~~(12) Fire Containment or Inhibiting Methods Employed:~~

~~(a) The functions are located in a separate fire-resistive enclosure.~~

~~(b) The means of fire detection, suppression and alarming are provided and accessible.~~

~~(13) Remarks—None.~~

9A.4.2.5.6 ~~Recirc Internal Pump MG Sets and Control Panels~~Rm Nos. 501,502,503 and 504

(4) Qualification of Fire Barriers—~~The MG set and control room spaces (consisting of~~ Rm Nos. 501, 502, 503 and 504~~)~~ are in a common fire area. The walls enclosing these spaces are common to adjacent fire areas FC4220 and FC4310 and are designated as fire barriers. Therefore they are of three hour fire-resistive concrete construction. The ceiling is common to fire areas FC4910, FC6210 and FC1210 above and is of three hour fire-resistive concrete construction. The floor is common ~~the~~to fire area FC4910 below and is also of three hour fire-resistive concrete construction. Access to Rm Nos. 501 and 503 is provided from Rm No. 521 via three hour fire rated doors. Rm Nos. 502 and 504 are accessible from Rm Nos. 501 and 503, respectively.

(5) Combustibles Present—(NCLL Applies)

Fire Loading	Total Heat of Combustion (MJ)
~~Lubricating oil internal to the MG Sets Cable in trays Electrical Panels~~Negligible	~~727 MJ/m2 NCLL (727 MJ/m2 maximum average) applies~~Negligible

(9) Consequences of Fire—~~Postulated fire assumes loss of the function. Loss of the RIP MG Sets will either necessitate a manual scram or initiate an automatic scram.~~ Room cooling is provided by coolers which receive chilled water from the turbine building chilled water system. Room purge (supply and exhaust) is provided by the division 2 HVAC which would be switched to the smoke removal mode upon detection of smoke. The combustion products would then be exhausted directly to the atmosphere without being returned to the division 2 areas. Smoke detection is provided in the branch exhaust duct for the non-safety-related rooms in this fire area (Rm Nos. 501, 502, 503,

and 504). This is an aid to determining that a fire is in the non-safety-related rooms and not in the division 2 rooms served by the common purge system. Refer to Subsection 9.5.1.1.6 for additional information.

(13) Remarks:

(a) *Room exhaust and makeup air capability is provided by the division 2 control building HVAC System*.

(b) The Recirc. Internal Pump MG Sets and Control Panels have been relocated to the Control Building Annex.

9A.4.2.5.8 Passageway (Rm No. 521)

*(4) Qualification of Fire Barriers—Rm No. 521 is a passageway which provides equipment and personnel access to ~~the RIP MG Set rooms~~*Rm. Nos. 501 and 503 *(FC5010) via three hour fire-resistive doors. The interior walls and building exterior walls of Rm No. 521 are designated as fire barriers and are of three hour fire-resistive concrete construction. Portion of the ceiling of Rm No. 521 is common to fire areas FC4220 and FC4310 above and is of three hour fire-resistive concrete construction. The remaining portion of the ceiling is not fire rated barrier. The floor is common to fire area FC4910 below and is also of three hour fireresistive concrete construction. Access to Rm No. 521 from above and below is provided by a stairwell (Rm No.325) and from room 592 via a 3 h fire rated door.*

9A.4.3 Turbine Building

STD DEP 1.2-2

9A.4.3.1 Floor B1F (El. 2.3m (2'-2")) - See Figure 9A.4-17 and Table 9A.4.3.1 Summary of Fire Protection Criteria Floor B1F

9A.4.3.1.1 Fire Area – FT1500 (General Area)

(1) Fire Area Boundary Description

Floor B1F shares fire area FT1500 with all other floors in the Turbine Building. Large overhead openings exist between floor B1F and mezzanine MB1F in the high pressure condensate pump area (room 132) and condenser vacuum pump area (room 121).

Open metal grating and non-fire rated equipment access hatches are installed in different locations/elevations between floor B1F and the upper floors in fire area FT1500.

The low pressure condensate pump area (room 140) extends vertically up to and through a non-fire rated equipment hatch in the turbine operating deck floor (floor 3F, elevation 27.8m (85'-10 ½")).

Non-fire rated equipment access hatches between floor B1F and floor MB1F exist in the northwest corridor, high pressure heater drain pump area (room 113), and turbine cooling water equipment area (room 224).

The resin storage tank area and condensate filter backwash receiving tank area extend from floor B1F up through floor MB1F to their respective ceilings at the underside of floor 1F (elevation 12.3m (35'-0")). In the resin storage tank area (room 1X1) open grating is located at elevation 6.3m (15'-3 ½") (floor MB1F).

The offgas charcoal adsorber area (room 112) extends vertically upward through floors MB1F and 1F to the underside of floor 2F (elevation 19.7m (59'-3 ½")). In room 112, metal grating is installed at elevation 12.3m (floor 1F (35'-0")) with an non-fire rated equipment access hatch at room ceiling level, elevation 19.7m (59'-3 ½") (floor 2F).

Open grating is also installed above the B1F floor level in and around the main condenser area (room 120) at elevation 4.5m (9'-6 ½").

Fire area FT1500 is bounded by:

- The Turbine Building exterior walls
- The interior walls enclosing stairwell no. 2 (room 122, fire area FT1503)
- The interior walls enclosing stairwell no. 4 (room 249, fire area FT2504)
- The interior walls enclosing stairwell no. 6 (room 1X3, fire area FT15X1)
- The interior walls enclosing stairwell no. 7 (room 1X4, fire area FT15X2)
- The interior wall between this floor and the stairwell (room 141, fire area FT15X3) leading down to the access to the Radwaste Tunnel and condensate filter backwash transfer pump area (room 144).
- The floor above the Radwaste Tunnel.
- The ceiling beneath the oil purification unit (room 230, fire area FT2500) on floor MB1F
- The ceiling beneath the oil storage tank (room 1Y1, fire area FT15Y3)) on floor MB1F
- The ceiling beneath the EHC hydraulic power unit (room 232, fire area FT15Y4) on floor MB1F

(2) Equipment: See Table 9A.6-4

Safety-Related	*Provides Core Cooling*
Yes	*No*

(3) Radioactive Material Present—None that can be released as a result of fire.

(4) Qualification of Fire Barriers –

The Turbine Building is classified as Type IA construction in accordance with the International Building Code (IBC), 2006. Type IA construction is non-combustible. The building structural frame, and all exterior and interior bearing walls, are required to be of 3 hour fire-resistive construction. The building floor is required to be of not less than 2 hour fire resistive construction, including supporting beams and joists. Also, the building roof is required to be of not less than 1 ½ hour fire resistive construction.

The enclosed stairwells that serve floor B1F, stairwell nos. 2, 4, 6 and 7 are of 2 hour fire-resistive concrete construction. Enclosed stairwell nos. 2 and 4 serve to access and exit controlled areas within the Turbine Building and extend vertically upwards to floor 3F at elevation 27.8m (85'-10 ½"). Enclosed stairwell nos. 6 and 7 provide for access and exit from uncontrolled Turbine Building areas associated with the Turbine Cooling Water (TCW) System and extend upwards to floor 1F at grade (elevation 12.3m (35'-0")).

Enclosed stairwell nos. 2, 4, 6 and 7 are separate fire areas and are discussed in subsections 9A.4.3.1.2 through 9A.4.3.1.5 (fire areas FT1503, FT2504, FT15X1, and FT15X2, respectively).

The Radwaste Tunnel is separated from the Turbine Building by 3 hour fire-resistive concrete construction. This separation includes interior walls between the condensate filter backwash receiving tank area (room 143), condensate filter backwash transfer pump area (room 144), and the B1F floor at elevation 2.3m (2'-2"), adjacent to and above the Radwaste Tunnel.

An unenclosed stairway leading down to the Radwaste Tunnel and condensate filter backwash transfer pump area (room 144) is located in room 141. This stairway is separated from the Turbine Building by a 3 hour fire-resistive concrete wall and 3 hour fire-rated door.

The Radwaste Tunnel is separated from the Turbine Building exterior by 3 hour fire-resistive concrete construction along the west side of the building. Also, the pipe space exterior to the Turbine Building along the south wall at this elevation is of 3 hour fire-resistive concrete construction.

The remaining exterior walls are constructed of concrete backed by exterior fill.

Remaining floor areas are made up of the concrete base mat.

The remaining portion of the ceiling of floor B1F is concrete but is not designated as a fire-resistive barrier except where this ceiling falls beneath floor areas associated with the lube oil purification unit (room 230, fire area FT2500), EHC hydraulic power unit (room 232, fire area FT15Y4), and turbine lube oil storage tank areas (room 1Y1, fire area FT15Y3) located on floor MB1F.

(5) Combustibles Present:

Fire Loading	Total Heat of Combustion (MJ)
(a) Cable in conduit, and less than the equivalent of 0.6m cable trays	Acceptable
(b) Limited quantities of lubricants in pumps	Negligible
(c) Charcoal in offgas charcoal bed	Does not contribute to fire loading
(d) Resin in resin storage tanks	Does not contribute to fire loading

(6) Detection Provided – Class A supervised POC, and manual alarm pull stations at Columns – Rows (C-R) TA.4-T7.5, TJ.7-T7.5, TJ.6-T2.2, TG.3-T2.

(7) Suppression Available:

Type	Location/Actuation
Modified Class III standpipes	Stairwells No.2 <122>, No.4 <249>, No.6, and No.7
ABC hand extinguishers and hose stations	TA.1-T6.4, TB.9-T6.4, TC.5-T6.3, TD.2-T6.1,TE.3-T7, TG-T7.2, TB.7-T5.8, TB.1-T5.2, TA.9-T7.8, TC.8-T7.8, TE.7-T7.8, TG.5-T7.8, TH.3-T7.8, TC.2-T3.2, TB.1-T2.9, TB.2-T1.1, TC.6-T2.2, TE.1-T2, TF.9-T2, TC.4-T4, TD.1-T5.6, TG-T5.7, TH.1-T3.9, TG.4-T2.1, TJ-T2.1, TH.3-T4.1, TJ.9-T4.1, TH.8-T6
Wet pipe sprinkler system Design density 12.2 L/min-m^2 (0.3 gpm/ft^2) over 464.5 m^2 (5000 ft^2)	Throughout floor B1F
Wet Pipe Sprinkler Design density 8.2 L/min-m^2 (0.20 gpm/ft^2) over 139 m^2 (1,500 ft^2)	Stairwell Access to Radwaste Tunnel (Room 141)

(8) Fire Protection Design Criteria Employed:

(a) Fire detection and suppression capability is provided and accessible;

(b) Fire stops are provided for penetrations through rated fire barriers.

(9) Consequences of Fire – Postulated fire assumes loss of function. Smoke from a fire would be removed by the normal HVAC system except for the following rooms:

(a) Rooms 110 and 142 by normal HVAC and process exhaust.

(b) Rooms 112 and 144 by process exhaust.

(10) Consequences of Fire Suppression – Suppression extinguishes the fire. Refer to to Section 3.4, “Water Level (Flood) Design,” for drain system.

(11) Design Criteria Used for Protection Against Inadvertent Operation, Careless Operation or Rupture of the Suppression System:

(a) Provision of raised supports for the equipment

(b) Refer to Section 3.4, “Water Level (Flood) Design,” for drain system.

(12) Fire Containment or Inhibiting Methods Employed:

(a) Fire stops are provided for penetrations through fire rated barriers.

(b) The means of fire detection, suppression and alarming are provided and accessible.

(13) Remarks:

(a) Smoke detectors and temperature controllers are mounted in the exhaust duct of the offgas system to detect any fire in the charcoal beds. The fire is contained by isolating the charcoal adsorber vessel and purging the vessel with nitrogen gas.

(b) The following safety-related equipment representing all four safety divisions is mounted on this floor:

B21-PT301 A-D

(c) Section 9A.5, Special Cases, provides justification for locating equipment from multiple safety divisions on this floor of the turbine building.

(d) Electrical cable insulation in conduit does not represent a combustible fire load.

(e) The total flow of the wet pipe sprinkler system on floor B1F with a 1893 L/min (500 gpm) hose stream allowance is estimated to be 10,410 L/min (2750 gpm).

(f) The total flow of the wet pipe sprinkler system in the stairwell access to the Radwaste Tunnel (Room 141) with a 1893 L/min (500 gpm) hose stream allowance is estimated to be 3,596 L/min (950 gpm).

9A.4.3.1.2 Fire Area – FT1503 (Stairwell No. 2 – Room 122)

(1) Fire Area Boundary Description

Stairwell No. 2 serves controlled areas inside the Turbine Building at floor level B1F.

Fire area FT1503 extends vertically upward from floor B1F through floor MB1F, and adjacent to floors 1F, 2F, and 3F (elevation 27.8m (85’-10 ½”)).

Access is provided to stairwell no. 2 from B1F and each of the upper floors.

Stairwell no. 2 is a separate fire area bounded by interior fire walls at floor levels B1F and MB1F. At floors 1F, 2F, and 3F, stairwell no. 2 is bounded by interior and exterior fire-resistive walls.

(2) Equipment – See Table 9A.6-4

Safety Related	Provides Core Cooling
No	No

(3) Radioactive Material Present – None.

(4) Qualification of Fire Barriers – At floor levels B1F and MB1F, walls enclosing stairwell no. 2 are a minimum of 2 hour fire-resistive concrete construction. Stairwell doors are a minimum of 1-1/2 hour fire rated (doors are 3-hour fire rated for consistency throughout the Turbine Building). The floor is the concrete basemat of floor B1F.

At floor levels 1F, 2F, and 3F, interior and exterior walls are of 3 hour fire-resistive concrete construction. Doors leading into stairwell no. 2 from inside the Turbine Building are a minimum of 1-1/2 hour fire rated (doors are 3-hour fire rated for consistency throughout the Turbine Building) at all levels. The

door at the exit discharge at grade level (floor 1F, elevation 12.3m) is a 3 hour fire rated door.

(5) Combustibles Present – No significant quantities of exposed combustibles.

(6) Detection Provided – Class A supervised POC at each building floor elevation and manual pull station external to the enclosed stairway at each floor elevation.

(7) Suppression Available:

Type	Location/Actuation
Modified Class III standpipe	Stairwell No.2 <122>
ABC portable (hand) extinguishers and hose station	TG.4-T2.1
Wet pipe sprinkler system Design density 6.1 L/min-m^2 (0.15 gpm/ft^2)	Stairwell No. 2

(8) Fire Protection Design Criteria Employed:

(a) The stairwell is located in a separate fire-resistive enclosure.

(b) Fire detection and suppression capability is provided and accessible.

(9) Consequences of Fire – The postulated fire assumes loss of function of the enclosed stairway. Smoke from a fire would be removed by the normal HVAC system.

(10) Consequences of Fire Suppression – Suppression extinguishes the fire. Refer to to Section 3.4, “Water Level (Flood) Design,” for drain system.

(11) Design Criteria Used for Protection Against Inadvertent Operation, Careless Operation or Rupture of the Suppression System:

(a) Refer to Section 3.4, “Water Level (Flood) Design,” for drain system.

(12) Fire Containment or Inhibiting Methods Employed:

(a) The function is provided in a fire-resistive enclosure.

(b) Fire stops are provided for penetrations through fire rated barriers.

(c) The means of fire detection, suppression and alarming are provided and accessible.

(13) Remarks – The total flow of the wet pipe sprinkler system with a 1893 L/min (500 gpm) hose stream allowance is estimated to be 3,218 L/min (850 gpm).

9A.4.3.1.3 Fire Area – FT2504 (Stairwell No. 4 – Room 249)

(1) Fire Area Boundary Description

Stairwell No. 4 serves controlled areas inside the Turbine Building at floor level B1F.

Fire area FT2504 extends vertically upward from floor B1F through floor MB1F, and adjacent to floors 1F, 2F, and 3F (elevation 27.8m (85'-10 ½")).

Access is provided to stairwell no. 4 from B1F and each of the upper floors.

Stairwell no. 4 is a separate fire area bounded by interior and exterior fire-resistive walls at floor levels B1F, MB1F, 1F, 2F, and 3F.

(2) Equipment:

Safety Related	Provides Core Cooling
No	No

(3) Radioactive Material Present – None.

(4) Qualification of Fire Barriers – At floor levels B1F, MB1F, 1F, 2F, and 3F, interior walls enclosing stairwell no. 4 are a minimum of 2 hour fire-resistive concrete construction. Stairwell doors are a minimum of 1-1/2 hour fire rated (doors are 3-hour fire rated for consistency throughout the Turbine Building). The floor is the concrete basemat of floor B1F.

At floor levels 1F, 2F, and 3F, exterior walls are of 3 hour fire-resistive concrete construction. Doors leading into stairwell no. 4 from inside the Turbine Building are a minimum of 1-1/2 hour fire rated (doors are 3-hour fire rated for consistency throughout the Turbine Building) at all levels. The door at the exit discharge at grade level (floor 1F, elevation 12.3m (35'-0")) is a 3 hour fire rated door.

(5) Combustibles Present – No significant quantities of exposed combustibles.

(6) Class A supervised POC at each building floor elevation and manual pull station external to the enclosed stairway at each floor elevation.

(7) Suppression Available:

Type	Location/Actuation
Modified Class III standpipe	Stairwell No.4 <249>
ABC portable (hand) extinguishers and hose stations	TA.1-T6.4, TA.9-T7.8,
Wet pipe sprinkler system Design density 6.1 L/min-m^2 (0.15 gpm/ft^2)	Stairwell No. 4

(8) Fire Protection Design Criteria Employed:

(a) The stairwell is located in a separate fire-resistive enclosure.

(b) Fire detection and suppression capability is provided and accessible.

(9) Consequences of Fire – The postulated fire assumes loss of function of the enclosed stairway. Smoke from a fire would be removed by the normal HVAC system.

(10) Consequences of Fire Suppression – Suppression extinguishes the fire. Refer to to Section 3.4, “Water Level (Flood) Design,” for drain system.

(11) Design Criteria Used for Protection Against Inadvertent Operation, Careless Operation or Rupture of the Suppression System:

(a) Refer to Section 3.4, “Water Level (Flood) Design,” for drain system.

(12) Fire Containment or Inhibiting Methods Employed:

(a) The function is provided in a fire-resistive enclosure.

(b) Fire stops are provided for penetrations through fire rated barriers.

(c) The means of fire detection, suppression and alarming are provided and accessible.

(13) Remarks – The total flow of the wet pipe sprinkler system with a 1893 L/min (500 gpm) hose stream allowance is estimated to be 3,218 L/min (850 gpm).

9A.4.3.1.4 Fire Area – FT15X1 (Stairwell No. 6 - Room 1X3)

(1) Fire Area Boundary Description

Stairwell No. 6 serves uncontrolled areas associated with the turbine cooling water system inside the Turbine Building at floor level B1F, and adjustable speed drive equipment at floor levels MB1F and 1F.

Fire area FT15X1 extends vertically upward from floor B1F, through floor MB1F, and terminates on floor 1F (elevation 12.3m (35’-0”)).

Access is provided to stairwell no. 6 from B1F and each of the upper floors.

Stairwell no. 6 is a separate fire area bounded by interior and exterior fire-resistive walls at floor levels B1F, MB1F, and 1F.

(2) Equipment:

Safety Related	Provides Core Cooling
No	No

(3) Radioactive Material Present – None.

(4) Qualification of Fire Barriers – At floor levels B1F, MB1F, and 1F interior walls enclosing stairwell no. 6 are a minimum of 2 hour fire-resistive concrete construction. Stairwell doors are a minimum of 1-1/2 hour fire rated (doors are 3-hour fire rated for consistency throughout the Turbine Building). The floor is the concrete basemat of floor B1F.

At floor level 1F, the exterior wall is of 3 hour fire-resistive concrete construction. Doors leading into stairwell no. 6 from inside the Turbine Building are a minimum of 1-1/2 hour fire rated (doors are 3-hour fire rated for consistency throughout the Turbine Building) at all levels. The door at the exit discharge at grade level (floor 1F, elevation 12.3m (35'-0")) is a 3 hour fire rated door.

(5) Combustibles Present – No significant quantities of exposed combustibles.

(6) Class A supervised POC at each building floor elevation and manual pull station external to the enclosed stairway at each floor elevation.

(7) Suppression Available:

Type	Location/Actuation
Modified Class III standpipe	Stairwell No.6
ABC portable (hand) extinguishers and hose station	TJ-T2.1
Wet pipe sprinkler system Design density 6.1 L/min-m^2 (0.15 gpm/ft^2)	Stairwell No. 6

(8) Fire Protection Design Criteria Employed:

(a) The stairwell is located in a separate fire-resistive enclosure.

(b) Alternate access and egress routes are provided by a separate enclosed stairwell at this floor level (stairwell no. 7).

(c) Fire detection and suppression capability is provided and accessible.

(9) Consequences of Fire – The postulated fire assumes loss of function of the enclosed stairway. Access to other enclosed stairways at this floor level is maintained. Smoke from a fire would be removed by the normal HVAC system.

(10) Consequences of Fire Suppression – Suppression extinguishes the fire. Refer to to Section 3.4, "Water Level (Flood) Design," for drain system.

(11) Design Criteria Used for Protection Against Inadvertent Operation, Careless Operation or Rupture of the Suppression System:

(a) Refer to Section 3.4, “Water Level (Flood) Design,” for drain system.

(12) Fire Containment or Inhibiting Methods Employed:

(a) The function is provided in a fire-resistive enclosure.

(b) Fire stops are provided for penetrations through fire rated barriers.

(c) The means of fire detection, suppression and alarming are provided and accessible.

(13) Remarks – The total flow of the wet pipe sprinkler system with a 1893 L/min (500 gpm) hose stream allowance is estimated to be 3,218 L/min (850 gpm).

9A.4.3.1.5 Fire Area – FT15X2 (Stairwell No. 7 – Room)

(1) Fire Area Boundary Description

Stairwell No. 7 serves uncontrolled areas associated with the turbine cooling water system inside the Turbine Building at floor level B1F, and adjustable speed drive equipment at floor levels MB1F and 1F.

Fire area FT15X2 extends vertically upward from floor B1F, through floor MB1F, and terminates on floor 1F.(elevation 12.3m (35’-0”)).

Access is provided to stairwell no. 6 from B1F and each of the upper floors.

Stairwell no. 7 is a separate fire area bounded by interior and exterior fire-resistive walls at floor levels B1F, MB1F, and 1F.

(2) Equipment:

Safety Related	Provides Core Cooling
No	No

(3) Radioactive Material Present – None.

(4) Qualification of Fire Barriers – At floor levels B1F, MB1F, and 1F interior walls enclosing stairwell no. 7 are a minimum of 2 hour fire-resistive concrete construction. Stairwell doors are a minimum of 1-1/2 hour fire rated (doors are 3-hour fire rated for consistency throughout the Turbine Building). The floor is the concrete basemat of floor B1F.

At floor level 1F, the exterior wall is of 3 hour fire-resistive concrete construction. Doors leading into stairwell no. 7 from inside the Turbine Building are a minimum of 1-1/2 hour fire rated (doors are 3-hour fire rated for consistency throughout the Turbine Building) at all levels. The door at the exit

discharge at grade level (floor 1F, elevation 12.3m (35'-0")) is a 3 hour fire rated door.

(5) Combustibles Present – No significant quantities of exposed combustibles.

(6) Class A supervised POC at each building floor elevation and manual pull station external to the enclosed stairway at each floor elevation.

(7) Suppression Available:

Type	Location/Actuation
Modified Class III standpipe	Stairwell No.7
ABC portable (hand) extinguishers and hose station	TH.8-T6
Wet pipe sprinkler system Design density 6.1 L/min-m^2 (0.15 gpm/ft^2)	Stairwell No. 7

(8) Fire Protection Design Criteria Employed:

(a) The stairwell is located in a separate fire-resistive enclosure.

(b) Alternate access and egress routes are provided by a separate enclosed stairwell at this floor level (stairwell no. 6).

(c) Fire detection and suppression capability is provided and accessible.

(9) Consequences of Fire – The postulated fire assumes loss of function of the enclosed stairway. Access to other enclosed stairways at this floor level is maintained. Smoke from a fire would be removed by the normal HVAC system.

(10) Consequences of Fire Suppression – Suppression extinguishes the fire. Refer to to Section 3.4, "Water Level (Flood) Design," for drain system.

(11) Design Criteria Used for Protection Against Inadvertent Operation, Careless Operation or Rupture of the Suppression System:

(a) Refer to Section 3.4, "Water Level (Flood) Design," for drain system.

(12) Fire Containment or Inhibiting Methods Employed:

(a) The function is provided in a fire-resistive enclosure.

(b) Fire stops are provided for penetrations through fire rated barriers.

(c) The means of fire detection, suppression and alarming are provided and accessible.

(13) Remarks – The total flow of the wet pipe sprinkler system with a 1893 L/min (500 gpm) hose stream allowance is estimated to be 3,218 L/min (850 gpm).

Table 9A.4.3.1 - Summary of Fire Protection Criteria
Floor B1F

Fire Area	Description	Adjacent Fire Area	Adjacent Fire Area Description	Fire Rated Separation	Fire Separation Criteria	Automatic Suppression Type	Density	Suppression Criteria
FT1500	General Area	FT1503	Stairwell No. 2 (Room 122)	Walls: 2-hour fire resistive Doors: 3-hour fire rated	Walls: NFPA 101, paragraph 8.5.6.(1) Doors: NFPA 101, Table 8.3.4.2	Wet pipe sprinkler	0.30 gpm/ft^2 (12.2 L/min-m^2) over minimum application of 5000 ft^2 (464.5 m^2) Total flow (Est.): 2750 gpm (10,410 L/min)	(a) NFPA 804, 2006, paragraph 10.8.2.1(2) (b) NEIL LCM, March 2008, A3.2.20.5.2.1.1..
		FT2504	Stairwell No. 4 (Room 249)	Walls: 2-hour fire resistive Doors:3-hour fire rated	Walls: NFPA 101, paragraph 8.5.6.(1) Doors:NFPA 101, Table 8.3.4.2			
		FT15X1	Stairwell No. 6 (Room 1X3)	Walls: 2-hour fire resistive Doors: 3-hour fire rated	Walls: NFPA 101, paragraph 8.5.6.(1) Doors: NFPA 101, Table 8.3.4.2			
		FT15X2	Stairwell No. 7 (Room 1X4)	Walls: 2-hour fire resistive Doors: 3-hour fire rated	Walls: NFPA 101, paragraph 8.5.6.(1) Doors: NFPA 101, Table 8.3.4.2			

Table 9A.4.3.1 - Summary of Fire Protection Criteria
Floor B1F (Continued)

Fire Area	Description	Adjacent Fire Area	Adjacent Fire Area Description	Fire Rated Separation	Fire Separation Criteria	Automatic Suppression Type	Density	Suppression Criteria
FT1500	General Area	External to Turbine Building	Radwaste Tunnel	Exterior Turbine Building Wall: 3-hour fire resistive Floor: 3-hour fire resistive	NEIL LCM, March 2008, 3.2.9.1 NFPA 804, paragraph 8.1.2.3 Also, based on (IBC) H-4 Occupancy and Type 1A construction Exterior Turbine Bldg. Wall: IBC, 2006, Table 601 Turbine Bldg. Floor over Radwaste Building (treated as separation between buildings): IBC, 2006, Table 601	Wet pipe sprinkler	0.30 gpm/ft^2 (12.2 L/min-m^2) over minimum application of 5000 ft^2 (464.5 m^2) Total flow (Est.): 2750 gpm (10,410 L/min)	(a) NFPA 804, 2006, paragraph 10.8.2.1(2) (b) NEIL LCM, March 2008, A3.2.20.5.2.1.1..
		FT15X3	Stairwell Access to Radwaste Tunnel (Room 141)	Wall: 3-hour fire resistive Door: 3-hour fire rated	NEIL LCM, March 2008, 3.2.9.1 NFPA 804, paragraph 8.1.2.3 Also, based on (IBC) H-4 Occupancy and Type 1A construction Exterior Turbine Bldg. Wall: IBC, 2006, Table 601 Turbine Bldg. Floor over Radwaste Building (treated as separation between buildings): IBC, 2006, Table 601			

Table 9A.4.3.1 - Summary of Fire Protection Criteria Floor B1F (Continued)

Fire Area	Description	Adjacent Fire Area	Adjacent Fire Area Description	Fire Rated Separation	Fire Separation Criteria	Automatic Suppression Type	Density	Suppression Criteria
FT1500	General Area	FT2500	Lube Oil Purification Unit on Floor MB1F (Room 230)	Ceiling: 3-hour fire resistive	NEIL LCM, March 2008, 3.2.9.1 NFPA 804, paragraph 8.1.2.3	Wet pipe sprinkler	0.30 gpm/ft^2 (12.2 L/min-m^2) over minimum application of 5000 ft^2 (464.5 m^2) Total flow (Est.): 2750 gpm (10,410 L/min)	(a) NFPA 804, 2006, paragraph 10.8.2.1(2) (b) NEIL LCM, March 2008, A3.2.20.5.2.1.1..
		FT15Y3	Lube Oil Storage Tanks on Floor MB1F (Room 1Y1)	Ceiling: 3-hour fire resistive	NEIL LCM, March 2008, 3.2.9.1 NFPA 804, paragraph 8.1.2.3			
		FT15Y4	EHC Hydraulic Power Unit Floor MB1F (Room 232)	Ceiling: 3-hour fire resistive	NEIL LCM, March 2008, 3.2.9.1			
FT1503	Stairwell No. 2 (Room 122)	FT1500	General Area	Walls: 2-hour fire resistive Doors: 3-hour fire rated	Walls: NFPA 101, paragraph 8.5.6.(1) Doors: NFPA 101, Table 8.3.4.2	Wet pipe sprinkler	0.15 gpm/ft^2 (6.1 L/min-m^2) over 1500 ft^2 (139 m^2) Total flow (Est.): 850 gpm (3218 L/min)	Ordinary Hazard Group 1 per NFPA 13, paragraph 5.3.1
FT2504	Stairwell No. 4 (Room 249)	FT1500	General Area	Walls: 2-hour fire resistive Doors: 3-hour fire rated	Walls: NFPA 101, paragraph 8.5.6.(1) Doors: NFPA 101, Table 8.3.4.2	Wet pipe sprinkler	0.15 gpm/ft^2 (6.1 L/min-m^2) over 1500 ft^2 (139 m^2) Total flow (Est.): 850 gpm (3218 L/min)	Ordinary Hazard Group 1 per NFPA 13, paragraph 5.3.1

Table 9A.4.3.1 - Summary of Fire Protection Criteria Floor B1F (Continued)

Fire Area	Description	Adjacent Fire Area	Adjacent Fire Area Description	Fire Rated Separation	Fire Separation Criteria	Automatic Suppression Type	Density	Suppression Criteria
FT15X1	Stairwell No. 6 (Room 1X3)	FT1500	General Area	Walls: 2-hour fire resistive Doors: 3-hour fire rated	Walls: NFPA 101, paragraph 8.5.6.(1) Doors: NFPA 101, Table 8.3.4.2	Wet pipe sprinkler	0.15 gpm/ft^2 (6.1 L/min-m^2) over 1500 ft^2 (139 m^2) Total flow (Est.): 850 gpm (3218 L/min)	Ordinary Hazard Group 1 per NFPA 13, paragraph 5.3.1
FT15X2	Stairwell No. 7 (Room 1X4)	FT1500	General Area	Walls: 2-hour fire resistive Doors: 3-hour fire rated	Walls: NFPA 101, paragraph 8.5.6.(1) Doors: NFPA 101, Table 8.3.4.2	Wet pipe sprinkler	0.15 gpm/ft^2 (6.1 L/min-m^2) over 1500 ft^2 (139 m^2) Total flow (Est.): 850 gpm (3218 L/min)	Ordinary Hazard Group 1 per NFPA 13, paragraph 5.3.1
FT15X3	Stairwell Access to Radwaste Tunnel (Room 141)	FT1500	General Area	Wall: 3-hour fire resistive Door: 3-hour fire rated Ceiling: 3-hour fire resistive	NEIL LCM, March 2008, 3.2.9.1 NFPA 804, paragraph 8.1.2.3 Also, based on (IBC) H-4 Occupancy and Type 1A construction Exterior Turbine Bldg. Wall: IBC, 2006, Table 601 Turbine Bldg. Floor over Radwaste Building (treated as separation between buildings): IBC, 2006, Table 601	Wet pipe sprinkler	0.20 gpm/ft^2 (8.2 L/min-m^2) over 1500 ft^2 (139 m^2) Total flow (Est.): 950 gpm (3596 L/min)	Ordinary Hazard Group 2 per NFPA 13, paragraph 5.3.2

9A.4.3.2 Floor MB1F (El. 6.3m (15'-3 ½")) - See Figure 9A.4-18 and Table 9A.4.3.2 Summary of Fire Protection Criteria Floor MB1F

9A.4.3.2.1 Fire Area - FT1500 (General Area)

(1) Fire Area Boundary Description

Floor MB1F shares fire area FT1500 with all other floors in the Turbine Building. Large overhead openings exist between floor MB1F and B1F over the high pressure condensate pump area (room 132) and condenser vacuum pump area (room 121).

Open metal grating and non-fire rated equipment access hatches are installed in different locations/elevations between floor MB1F and the upper and lower floors in fire area FT1500.

The low pressure condensate pump area (room 140) extends vertically up from floor B1F, through floors MB1F, 1F and 2F, to and through an non-fire rated equipment hatch in the turbine operating deck floor (floor 3F, elevation 27.8m (85'-10 ½")).

Non-fire rated equipment access hatches are installed in the floor between MB1F and floor B1F in the northwest corridor area (room 242), in the pipe space over the high pressure heater drain pump area, and in the adjustable speed drive area (room 214-2) over the turbine cooling water equipment area below.

The resin storage tank area (room 1X1) and condensate filter backwash receiving tank area (room 143) extend from floor B1F up through floor MB1F to their respective ceilings at the underside of floor 1F (elevation 12.3m (35'-0")).

The offgas charcoal adsorber area (room 112) extends vertically upward from floor B1F through floors MB1F and 1F to the underside of floor 2F (elevation 19.7m (59'-3 ½")). Room 112 is part of fire area FT1500. In the off-gas charcoal bed area (room 112), metal grating is installed at elevation 12.3m (floor 1F) with an non-fire rated equipment access hatch at room ceiling level, elevation 19.7m (59'-3 ½") (floor 2F).

Access to the resin storage tank area (room 1X1) and condensate filter backwash receiving tank area (room 143) is from floor MB1F – these areas are part of fire area FT1500. In room 1X1 open grating is installed at this floor level.

Fire area FT1500 is bounded by:

- The Turbine Building exterior walls

- The interior walls enclosing stairwell no. 2 (room 122, fire area FT1503)
- The interior walls enclosing stairwell no. 3 (room 212, fire area FT2502)
- The interior walls enclosing stairwell no. 4 (room 249, fire area FT2504)
- The interior walls enclosing stairwell no. 6 (room 1X3, fire area FT15X1)
- The interior walls enclosing stairwell no. 7 (room 1X4, fire area FT15X2)
- The interior walls enclosing the elevator shaft (room 250, fire area FT15Y2)
- The floor above the access to the Radwaste Tunnel, Room 141, on floor B1F below
- The interior walls enclosing the area housing the lube oil purification unit (room 230, fire area FT2500)
- The interior walls enclosing the area housing the lube oil storage tanks (room 1Y1, fire area FT15Y3)
- The interior walls enclosing the area housing the EHC hydraulic power unit (room 232, fire area FT15Y4)
- The interior wall between the house boiler area (room 247, fire area FT2503) and this fire area, along building column line T8.
- The interior wall between the chiller area (room 248, fire area FT1501) and this fire area, along column line T8.

(2) Equipment – See Table 9A.6-4

Safety Related	Provides Core Cooling
No	No

(3) Radioactive Material Present – None that can be released as a result of fire.

(4) Qualification of Fire Barriers –

The Turbine Building is classified as Type IA construction in accordance with the International Building Code (IBC), 2006. Type IA construction is non-combustible. The building structural frame, and all exterior and interior bearing walls, are required to be of 3 hour fire-resistive construction. The building floor is required to be of not less than 2 hour fire resistive construction, including supporting beams and joists. Also, the building roof is required to be of not less than 1 ½ hour fire resistive construction.

The enclosed stairwells that serve floor MB1F, stairwell nos. 1, 2, 3, 4, 6, 7 and 8 are of 2 hour fire-resistive concrete construction.

Enclosed stairwell nos. 2, 4, 6, and 7 are separate fire areas and are discussed in subsections 9A.4.3.1.2 through 9A.4.3.1.5 (fire areas FT1503, FT2504, FT15X1, and FT15X2).

Enclosed stairwells 1, 3 and 8 are described in subsections 9A.4.3.2.2 through 9A.4.3.2.4 (fire areas FT1502, FT2502 and FT15Y1), respectively.

The elevator shaft (room 250) is of 2 hour fire-resistive concrete construction, is a separate fire area (FT15Y2), and is described in subsection 9A.4.3.2.5.

The walls enclosing the lube oil purification unit (room 230, fire area FT2500), lube oil storage tank area (room 1Y1, fire area FT15Y3), and the EHC hydraulic power unit (room 232, fire area FT15Y4) are separated from fire area FT1500 by 3 hour fire-resistive concrete construction with 3 hour fire rated doors. These rooms are described as separate fire areas in subsections 9A.4.3.2.6 through 9A.4.3.2.8, respectively.

The house boiler area (room 247, fire area FT2503) is separated from fire area FT1500 by 3 hour fire-resistive concrete construction along building column line T8. The fire area (FT2503) associated with room 247 is addressed in subsection 9A.4.3.2.9.

The HNCW chiller area (room 248) and instrument, service, and breathing air system area (room 111) are located in one fire area (FT1501) and separated from fire area FT1500 by 2 hour fire-resistive concrete construction along building column line T8. Fire area FT1501 is discussed in subsection 9A.4.3.2.10.

The Turbine Building is separated from the horizontal passageway that runs exterior and parallel to the southernmost building wall by 3 hour fire-resistive concrete construction. This horizontal passageway provides a protected exit and access from the Turbine Building to the Control Building and Service Building.

On the west side and exterior to the Turbine Building, between elevation 6.3m (MB1F) and elevation 12.3m (35’-0”) (grade) is a large exposed dry pit. The exterior Turbine Building wall at this location is of 3 hour fire-resistive construction.

The remaining exterior walls are of 3 hour fire-resistive concrete construction, consistent with the requirements of the IBC, and are backed by exterior fill.

Remaining floor areas are concrete basemat or 2 hour fire-resistive concrete construction consistent with the requirements of the IBC for a Type IA structure.

(5) Combustibles Present:

Fire Loading	Total Heat of Combustion (MJ)
(a) Cable in conduit, and less than the equivalent of 0.6m cable trays	Acceptable
(b) Limited quantities of lubricants in pumps	Negligible
(c) Charcoal in offgas charcoal bed	Does not contribute to fire loading
(d) Resin in resin storage tanks	Does not contribute to fire loading

(6) Detection Provided – Class A supervised POC, and manual alarm pull stations at Columns – Rows (C-R)

Manual Pull Locations: TA.4-T7.5, TH.5-T7.9, TJ.7-T7.5, TJ.6-T2.2, TG.6-T2, TJ.9-T6.8, TJ.9-T6.1, TJ.9-T3.1.

(7) Suppression Available:

Type	Location/Actuation
Modified Class III standpipes	Stairwells No.2 <122>, No.3 <212>, No.4 <249>, No.6, and No.7
ABC portable (hand) extinguishers and hose stations	TA.9-T1.1, TA.1-T6.4, TB-T2.9, TB-T5.2, TC.2-T4.2, TB.6-T7.8, TD.4-T7.8, TF.3-T7.8, TH.2-T7.8, TH.5-T6.3, TH.8-T4.5, TG.8-T2.9, TB.9-T7, TC.9-T6.2, TG-T6.2, TJ.9-T7.2, TJ.1-T5.8, TJ.9-T5.1, TJ.1-T3.7, TJ.9-T2.6, TJ.1-T1.1, TG.9-T1.8 <1Y1> TH.5-T2.8 <232> TH.7-T3, TH.8-T4.5 <230> TH.5-T6.3 <FT2503> <247> TA.6-T8.1, TA.9-T9.1 <FT1501> TC.8-T8.1, TH.5-T8.3, TC.2-T9.3, TE.1-T9, TF.9-T9, TH.5-T8.3, TJ.9-T9.4, TH.9-T9.4, TF.9-T9.4, TE-T9.9, TC.1-T9.9
Wet pipe sprinkler system Design density 12.2 L/min-m^2 (0.3 gpm/ft^2) over 464.5 m^2 (5000 ft^2)	Throughout floor MB1F

(8) Fire Protection Design Criteria Employed:

(a) Fire detection and suppression capability is provided and accessible;

(b) Fire stops are provided for penetrations through rated fire barriers.

(9) Consequences of Fire – Postulated fire assumes loss of function. Smoke from a fire would be removed by the normal HVAC system except for the following rooms:

(a) Room 142 by normal HVAC and process exhaust.

(b) Room 112 by process exhaust.

(10) Consequences of Fire Suppression – Suppression extinguishes the fire. Refer to Section 3.4, “Water Level (Flood) Design,” for drain system.

(11) Design Criteria Used for Protection Against Inadvertent Operation, Careless Operation or Rupture of the Suppression System:

(a) Provision of raised supports for the equipment

(b) Refer to Section 3.4, “Water Level (Flood) Design,” for drain system.

(12) Fire Containment or Inhibiting Methods Employed:

(a) Fire stops are provided for penetrations through fire rated barriers.

(b) The means of fire detection, suppression and alarming are provided and accessible.

(13) Remarks:

(a) Smoke detectors, and temperature controllers are mounted in the exhaust duct of the offgas system to detect any fire in the charcoal beds. The fire is contained by isolating the charcoal adsorber vessel and purging the vessel with nitrogen gas.

(b) Electrical cable insulation in conduit does not represent a combustible fire load.

(c) The total flow of the wet pipe sprinkler system on floor MB1F with a 1893 L/min (500 gpm) hose stream allowance is estimated to be 10,410 L/min (2750 gpm).

9A.4.3.2.2 Fire Area – FT1502 (Stairwell No. 1 – Room 114)

(1) Fire Area Boundary Description

Stairwell No. 1 serves uncontrolled areas inside the Turbine Building at floor levels MB1F, 1F, and 2F.

Fire area FT1502 extends vertically upward from floor MB1F through floor 2F (elevation 24.4m (74’-8 ½”)). Stairwell no. 1 is bounded by interior and exterior fire-resistive concrete construction.

Access is provided to stairwell no. 1 from floor MB1F and each of the upper floors.

(2) Equipment – See Table 9A.6-4

Safety Related	Provides Core Cooling
No	No

(3) Radioactive Material Present – None.

(4) Qualification of Fire Barriers – At floor levels MB1F, 1F and 2F; interior walls enclosing stairwell no. 1 are a minimum of 2 hour fire-resistive concrete construction. Exterior walls are of 3 hour fire-resistive concrete construction.

Interior stairwell doors are a minimum of 1-1/2 hour fire rated (doors are 3-hour fire rated for consistency throughout the Turbine Building). The door at the exit discharge at grade level (floor 1F, elevation 12.3m) is a 3 hour fire rated door.

The floor is the concrete basemat of floor MB1F.

(5) Combustibles Present – No significant quantities of exposed combustibles.

(6) Detection Provided – Class A supervised POC at each building floor elevation and manual pull station external to the enclosed stairway at each floor elevation.

(7) Suppression Available:

Type	Location/Actuation
Modified Class III standpipe	Stairwell No. 1 <114>
ABC portable (hand) extinguishers and hose station	TJ.9-T9.4
Wet Pipe Sprinkler Design density 6.1 L/min-m^2 (0.15 gpm/ft^2)	Stairwell No. 1

(8) Fire Protection Design Criteria Employed:

(a) The stairwell is located in a separate fire-resistive enclosure.

(b) Fire detection and suppression capability is provided and accessible.

(9) Consequences of Fire – The postulated fire assumes loss of function of the enclosed stairway. Smoke from a fire would be removed by the normal HVAC system.

(10) Consequences of Fire Suppression – Suppression extinguishes the fire. Refer to Section 3.4, “Water Level (Flood) Design,” for drain system.

(11) Design Criteria Used for Protection Against Inadvertent Operation, Careless Operation or Rupture of the Suppression System:

(a) Refer to Section 3.4, “Water Level (Flood) Design,” for drain system.

(12) Fire Containment or Inhibiting Methods Employed:

(a) The function is provided in a fire-resistive enclosure.

(b) Fire stops are provided for penetrations through fire rated barriers.

(c) The means of fire detection, suppression and alarming are provided and accessible.

(13) Remarks – The total flow of the wet pipe sprinkler system with a 1893 L/min (500 gpm) hose stream allowance is estimated to be 3,218 L/min (850 gpm).

9A.4.3.2.3 Fire Area – FT2502 (Stairwell No. 3 – Room 212)

(1) Fire Area Boundary Description

Stairwell No. 3 serves controlled areas inside the Turbine Building at floor levels MB1F, 1F, 2F and 3F.

Fire area FT2502 extends vertically upward from floor MB1F through floor 3F (elevation 27.8m (85'-10 ½")). Stairwell no. 3 is bounded by interior fire-resistive concrete construction.

Access is provided to stairwell no. 3 from floor MB1F and each of the upper floors.

(2) Equipment – See Table 9A.6-4

Safety Related	Provides Core Cooling
No	No

(3) Radioactive Material Present – None.

(4) Qualification of Fire Barriers – At floor levels MB1F, 1F, 2F and 3F, walls enclosing stairwell no. 3 are a minimum of 2 hour fire-resistive concrete construction. Stairwell doors are a minimum of 1-1/2 hour fire rated (doors are 3-hour fire rated for consistency throughout the Turbine Building). The floor is the concrete basemat of floor MB1F.

(5) Combustibles Present – No significant quantities of exposed combustibles.

(6) Detection Provided – Class A supervised POC at each building floor elevation and manual pull station external to the enclosed stairway at each floor elevation.

(7) Suppression Available:

Type	Location/Actuation
Modified Class III standpipe	Stairwell No.3 <212>
ABC portable (hand) extinguishers and hose station	TH.2-T7.8
Wet Pipe Sprinkler Design density 6.1 L/min-m^2 (0.15 gpm/ft^2)	Stairwell No. 3

(8) Fire Protection Design Criteria Employed:

(a) The stairwell is located in a separate fire-resistive enclosure.

(b) Alternate access and egress routes are provided by separate enclosed stairways at this floor level.

(c) Fire detection and suppression capability is provided and accessible.

(9) Consequences of Fire – The postulated fire assumes loss of function of the enclosed stairway. Smoke from a fire would be removed by the normal HVAC system.

(10) Consequences of Fire Suppression – Suppression extinguishes the fire. Refer to Section 3.4, “Water Level (Flood) Design,” for drain system.

(11) Design Criteria Used for Protection Against Inadvertent Operation, Careless Operation or Rupture of the Suppression System:

(a) Refer to Section 3.4, “Water Level (Flood) Design,” for drain system.

(12) Fire Containment or Inhibiting Methods Employed:

(a) The function is provided in a fire-resistive enclosure.

(b) Fire stops are provided for penetrations through fire rated barriers.

(c) The means of fire detection, suppression and alarming are provided and accessible.

(13) Remarks – The total flow of the wet pipe sprinkler system with a 1893 L/min (500 gpm) hose stream allowance is estimated to be 3,218 L/min (850 gpm).

9A.4.3.2.4 Fire Area – FT15Y1 (Stairwell No. 8 – Room 1Y5)

(1) Fire Area Boundary Description

Stairwell No. 8 serves uncontrolled areas inside the Turbine Building at floor levels MB1F, 1F, 2F, 3F and 4F.

Fire area FT15Y1 extends vertically upward from floor MB1F through floor 4F (elevation 38.3m). Stairwell no. 8 is bounded by interior and exterior fire-resistive concrete construction.

Access is provided to stairwell no. 8 from floor MB1F and each of the upper floors.

(2) Equipment – See Table 9A.6-4

Safety Related	Provides Core Cooling
No	No

(3) Radioactive Material Present – None.

(4) Qualification of Fire Barriers – At floor levels MB1F, 1F, 2F, 3F and 4F, interior walls enclosing stairwell no. 8 are a minimum of 2 hour fire-resistive concrete construction. Exterior walls are of 3 hour fire-resistive concrete construction.

Interior stairwell doors are a minimum of 1-1/2 hour fire rated (doors are 3-hour fire rated for consistency throughout the Turbine Building). The door at the exit discharge at grade level (floor 1F, elevation 12.3m) is a 3 hour fire rated door.

The floor is the concrete basemat of floor MB1F.

(5) Combustibles Present – No significant quantities of exposed combustibles.

(6) Detection Provided – Class A supervised POC at each building floor elevation and manual pull station external to the enclosed stairway at each floor elevation.

(7) Suppression Available:

Type	Location/Actuation
Modified Class III standpipe	Stairwell No.8
ABC portable (hand) extinguishers and hose station	TA.6-T8.1
Wet Pipe Sprinkler Design density 6.1 L/min-m^2 (0.15 gpm/ft^2)	Stairwell No. 8

(8) Fire Protection Design Criteria Employed:

(a) The stairwell is located in a separate fire-resistive enclosure.

(b) Fire detection and suppression capability is provided and accessible.

(9) Consequences of Fire – The postulated fire assumes loss of function of the enclosed stairway. Smoke from a fire would be removed by the normal HVAC system.

(10) Consequences of Fire Suppression – Suppression extinguishes the fire. Refer to Section 3.4, “Water Level (Flood) Design,” for drain system.

(11) Design Criteria Used for Protection Against Inadvertent Operation, Careless Operation or Rupture of the Suppression System:

(a) Refer to Section 3.4, “Water Level (Flood) Design,” for drain system.

(12) Fire Containment or Inhibiting Methods Employed:

(a) The function is provided in a fire-resistive enclosure.

(b) Fire stops are provided for penetrations through fire rated barriers.

(c) The means of fire detection, suppression and alarming are provided and accessible.

(13) Remarks – The total flow of the wet pipe sprinkler system with a 1893 L/min (500 gpm) hose stream allowance is estimated to be 3,218 L/min (850 gpm).

9A.4.3.2.5 Fire Area – FT15Y2 (Elevator Shaft – Room 250)

(1) Fire Area Boundary Description

The elevator shaft serves controlled areas inside the Turbine Building. Fire area FT15Y2 extends vertically upward from floor MB1F through floors 1F, 2F, and 3F (elevation 27.8m (85’-10 ½”)). This fire area is bounded by interior fire-resistive walls.

(2) Equipment – See Table 9A.6-4

Safety Related	Provides Core Cooling
No	No

(3) Radioactive Material Present – None.

(4) Qualification of Fire Barriers – The walls enclosing the elevator shaft are of a minimum of 2 hour fire-resistive concrete construction. Elevator doors are 1-1/2 hour fire rated doors.

(5) Combustibles Present – (NCLL Applies)

Fire Loading	Total Heat of Combustion (MJ)
Electrical Cables	727 MJ/m2 NCLL (727 MJ/m2 maximum average) applies
Small amount of elevator motor lubricants	Negligible

(6) Detection Provided – Class A supervised POC in the elevator shaft and manual pull station near the elevator door at each elevation.

(7) Suppression Available:

Type	Location/Actuation
Modified Class III standpipe	Stairwell No.3 <212>
ABC portable (hand) extinguishers and hose station	TH.2-T7.8
Wet Pipe Sprinkler Design density 8.2 L/min-m^2 (0.20 gpm/ft^2)	Elevator Shaft

(8) Fire Protection Design Criteria Employed:

(a) The stairwell is located in a separate fire-resistive enclosure.

(b) Alternate access and egress routes are provided by separate enclosed stairways at this floor level.

(c) Fire detection and suppression capability is provided and accessible.

(9) Consequences of Fire – The postulated fire assumes loss of function of the enclosed elevator shaft. Smoke from a fire would be removed by the normal HVAC system.

(10) Consequences of Fire Suppression – Suppression extinguishes the fire. Refer to Section 3.4, “Water Level (Flood) Design,” for drain system.

(11) Design Criteria Used for Protection Against Inadvertent Operation, Careless Operation or Rupture of the Suppression System:

(a) Refer to Section 3.4, “Water Level (Flood) Design,” for drain system.

(12) Fire Containment or Inhibiting Methods Employed:

(a) The function is provided in a fire-resistive enclosure.

(b) Fire stops are provided for penetrations through fire rated barriers.

(c) The means of fire detection, suppression and alarming are provided and accessible.

(13) Remarks – The total flow of the wet pipe sprinkler system with a 1893 L/min (500 gpm) hose stream allowance is estimated to be 3,596 L/min (950 gpm).

9A.4.3.2.6 Fire Area – FT2500 (Lube Oil Purification Unit - Room 230)

(1) Fire Area Boundary Description

The interior walls, ceiling and floor of fire area FT2500, containing the lube oil purification unit, consists of fire-resistive concrete construction.

(2) Equipment – See Table 9A.6-4

Safety Related	Provides Core Cooling
No	No

(3) Radioactive Material Present – None.

(4) Qualification of Fire Barriers – The walls, ceiling and floor enclosing the lube oil purification unit (room 230) are of 3 hour fire-resistive-concrete construction with 3 hour fire rated doors.

(5) Combustibles Present:

Fire Loading	Total Heat of Combustion (MJ)
Turbine Lube Oil, Class IIIB Combustible Liquid Volume: 7,571 L (2000 gal.) (Est.)	316,500 MJ (299,984,105 Btu)

(6) Detection Provided – Class A supervised rate compensated thermal detectors. The detection system is a cross zoned system requiring two detectors, one in each zone to sense fire before initiating the suppression system. A manual alarm pull station is located at each door.

(7) Suppression Available:

Type	Location/Actuation
Modified Class III standpipe	Stairwell No.3 <212>
ABC portable (hand) extinguishers and hose station	TH.5-T6.3
Deluge foam water spray system Foam water density: 20.4 L/min-m^2 (0.5 gpm/ft^2) (Est.)	Room 230

(8) Fire Protection Design Criteria Employed:

(a) Room 230 is configured as a separate fire-resistive enclosure.

(b) Alternate access and egress routes are provided by separate enclosed stairways at this floor level.

(c) Fire detection and suppression capability is provided and accessible.

(9) Consequences of Fire – The postulated fire assumes loss of function of the enclosed area and affected equipment. Smoke from a fire would be removed by the normal HVAC system.

(10) Consequences of Fire Suppression – Suppression extinguishes the fire. Refer to Section 3.4, “Water Level (Flood) Design,” for drain system.

(11) Design Criteria Used for Protection Against Inadvertent Operation, Careless Operation or Rupture of the Suppression System:

(a) Location of the manual suppression system external to the room

(b) Provision of raised supports for equipment

(c) Refer to Section 3.4, “Water Level (Flood) Design,” for drain system.

(d) Cross zoned detectors for initiation of deluge system

(12) Fire Containment or Inhibiting Methods Employed:

(a) The function is provided in a fire-resistive enclosure.

(b) Fire stops are provided for penetrations through fire rated barriers.

(c) The means of fire detection, suppression and alarming are provided and accessible.

(13) Remarks –The lube oil purification unit contains approximately 7,571 L (2,000 gallons), therefore the deluge foam water sprinkler system must be capable of suppressing any fire in this room. The total flow of the deluge foam sprinkler system with a 1893 L/min (500 gpm) hose stream allowance is estimated to be 3,710 L/min (980 gpm).

9A.4.3.2.7 Fire Area –FT15Y3 (Lube Oil Storage Tank Area - Room 1Y1)

(1) Fire Area Boundary Description

The interior walls, ceiling and floor of fire area FT15Y3, containing two (2) lube oil storage tanks, consists of fire-resistive concrete construction.

(2) Equipment – See Table 9A.6-4

Safety Related	Provides Core Cooling
No	No

(3) Radioactive Material Present – None.

(4) Qualification of Fire Barriers – The walls, ceiling and floor enclosing the lube oil storage tanks (room 1Y1, fire area FT15Y3) are of 3 hour fire-resistive-concrete construction with 3 hour fire rated doors.

(5) Combustibles Present:

Fire Loading	Total Heat of Combustion (MJ)
Turbine Lube Oil, Class IIIB Combustible Liquid Volume: 81,386 L (21,500 gal.) (Est.)	3,402,375 MJ (3,224,829,130 Btu)

(6) Detection Provided – Class A supervised rate compensated thermal detectors. The detection system is a cross zoned system requiring two detectors, one in each zone to sense fire before initiating the suppression system. A manual alarm pull station is located at each door.

(7) Suppression Available:

Type	Location/Actuation
Modified Class III standpipe	Stairwell No.2 <122>
ABC portable (hand) extinguishers and hose stations	TH.5-T2.8, TG.8-T2.9
Deluge foam water spray system Foam water density: 20.4 L/min-m^2 (0.5 gpm/ft^2) (Est.)	Room 1Y1

(8) Fire Protection Design Criteria Employed:

(a) Room 1Y1 is configured as a separate fire-resistive enclosure.

(b) Alternate access and egress routes are provided by separate enclosed stairways at this floor level.

(c) Fire detection and suppression capability is provided and accessible.

(9) Consequences of Fire – The postulated fire assumes loss of function of the enclosed area and affected equipment. Smoke from a fire would be removed by the normal HVAC system.

(10) Consequences of Fire Suppression – Suppression extinguishes the fire. Refer to Section 3.4, “Water Level (Flood) Design,” for drain system.

(11) Design Criteria Used for Protection Against Inadvertent Operation, Careless Operation or Rupture of the Suppression System:

(a) Location of the manual suppression system external to the room

(b) Provision of raised supports for equipment

(c) Refer to Section 3.4, “Water Level (Flood) Design,” for drain system.

(d) Cross zoned detectors for initiation of deluge system

(12) Fire Containment or Inhibiting Methods Employed:

(a) The function is provided in a fire-resistive enclosure.

(b) Fire stops are provided for penetrations through fire rated barriers.

(c) The means of fire detection, suppression and alarming are provided and accessible.

(13) Remarks –The lube oil storage tank area contains approximately 81,386 L (21,500 gallons), therefore the deluge foam water sprinkler system must be capable of suppressing any fire in this room. The total flow of the deluge foam sprinkler system with a 1893 L/min (500 gpm) hose stream allowance is estimated to be 5,867 L/min (1,550 gpm).

9A.4.3.2.8 Fire Area –FT15Y4 (EHC hydraulic power unit - Room 232)

(1) Fire Area Boundary Description

The interior walls, ceiling and floor of fire area FT15Y4, containing the EHC hydraulic power unit, consists of fire-resistive concrete construction.

(2) Equipment – See Table 9A.6-4

Safety Related	Provides Core Cooling
Yes	No

(3) Radioactive Material Present – None.

(4) Qualification of Fire Barriers – The walls, ceiling and floor enclosing EHC hydraulic power unit (room 1Y1, fire area FT15Y4) are of 3 hour fire-resistive-concrete construction with 3 hour fire rated doors.

(5) Combustibles Present:

Fire Loading	Total Heat of Combustion (MJ)
Hydraulic Fluid, Class IIIB Combustible Liquid Volume: 6,435 L (1700 gal.) (Est.)	269,025 MJ (254,986,489 Btu)

(6) Detection Provided – Class A supervised rate compensated thermal detectors. The detection system is a cross zoned system requiring two detectors, one in each zone to sense fire before initiating the suppression system. A manual alarm pull station is located at each door.

(7) Suppression Available:

Type	Location/Actuation
Modified Class III standpipe	Stairwell No.2 <122>
ABC portable (hand) extinguishers and hose stations	TH.7-T3, TH.8-T4.5, TG.8-T2.9
Deluge foam water spray system Foam water density: 20.4 L/min-m^2 (0.5 gpm/ft^2) (Est.)	Room 232

(8) Fire Protection Design Criteria Employed:

(a) Room 232 is configured as a separate fire-resistive enclosure.

(b) Alternate access and egress routes are provided by separate enclosed stairways at this floor level.

(c) Fire detection and suppression capability is provided and accessible.

(9) Consequences of Fire – The postulated fire assumes loss of function of the enclosed area and affected equipment. Smoke from a fire would be removed by the normal HVAC system.

(10) Consequences of Fire Suppression – Suppression extinguishes the fire. Refer to Section 3.4, “Water Level (Flood) Design,” for drain system.

(11) Design Criteria Used for Protection Against Inadvertent Operation, Careless Operation or Rupture of the Suppression System:

(a) Location of the manual suppression system external to the room

(b) Provision of raised supports for equipment

(c) Refer to Section 3.4, “Water Level (Flood) Design,” for drain system.

(d) Cross zoned detectors for initiation of deluge system

(12) Fire Containment or Inhibiting Methods Employed:

(a) The function is provided in a fire-resistive enclosure.

(b) Fire stops are provided for penetrations through fire rated barriers.

(c) The means of fire detection, suppression and alarming are provided and accessible.

(13) Remarks:

(a) The EHC hydraulic power unit contains approximately 6,435 L (1,700 gallons), therefore the deluge foam water sprinkler system must be capable of suppressing any fire in this room. The total flow of the deluge foam sprinkler system with a 1893 L/min (500 gpm) hose stream allowance is estimated to be 5,072 L/min (1,340 gpm).

(b) The following safety-related equipment representing all four safety divisions is mounted on this floor:

C71-PS002 A-D

(c) Section 9A.5, Special Cases, provides justification for locating equipment from multiple safety divisions on this floor of the turbine building.

9A.4.3.2.9 Fire Area –FT2503 (House Boiler Area - Room 247)

(1) Fire Area Boundary Description

The house boiler area (room 247) is enclosed by fire-resistive construction. The interior and exterior walls and ceiling that enclose house boiler equipment are of fire-resistive concrete construction.

Adjacent fire areas separated from room 247 include the HCNW chiller area (room 248) instrument, service and breathing air system equipment areas (rooms 111 and 1Y2) in fire area FT1501 and stairwell no. 8 (room 1Y5, fire area FT15Y1). Also, the combustion gas turbine area (room 317 – FT3500) is located on floor 1F above.

The house boiler area floor is the concrete basemat.

The house boiler area is an uncontrolled access area. Fire-resistive concrete construction separates room 247 from controlled access areas in the Turbine Building along column line T8.

The main portion of Room 247 extends vertically upward to the underside of floor 2F (elevation 19.7m). Separation between room 247 at this level for this area and the adjacent combustion turbine generator area (room 248 –

FT3500) is provided by fire-resistive concrete construction, including the ceiling, above which is switchgear room 'B' (room 310 – FT1501).

(2) Equipment – See Table 9A.6-4

Safety Related	Provides Core Cooling
No	No

(3) Radioactive Material Present – None.

(4) Qualification of Fire Barriers – The interior and exterior walls and ceiling that enclose the house boiler area (room 247 – FT2503) are of 3 hour fire-rated concrete construction with 3 hour fire rated doors.

The enclosed stairwell that serves the house boiler area on floor MB1F, stairwell no. 8, is of 2 hour fire-resistive concrete construction.

STP DEP 9.5-7

(5) Combustibles Present:

Fire Loading	Total Heat of Combustion (MJ)
(a) Cable in conduit, and dispersed in cable trays	Limited quantities
(b) Lubricants in pumps	Negligible

Note: The house boiler is electric which eliminates the possibility of fire involving significant quantities of combustible liquid in this area.

(6) Detection Provided – Class A supervised POC at each building floor elevation and manual pull station external to the enclosed stairway at each floor elevation.

Manual Pull Location: TA.3-T8.2

(7) Suppression Available:

Type	Location/Actuation
Modified Class III standpipe	Stairwell No.8
ABC portable (hand) extinguishers and hose stations	TA.6-T8.1, TA.9-T9.1
Wet pipe sprinkler system Design density 10.2 L/min-m^2 (0.25 gpm/ft^2)	Room 247

(8) Fire Protection Design Criteria Employed:

(a) Room 247 is configured as a separate fire-resistive enclosure.

(b) Fire detection and suppression capability is provided and accessible.

(9) Consequences of Fire – The postulated fire assumes loss of function of the enclosed area and affected equipment. Smoke from a fire would be removed by the normal HVAC system.

(10) Consequences of Fire Suppression – Suppression extinguishes the fire. Refer to Section 3.4, “Water Level (Flood) Design,” for drain system.

(11) Design Criteria Used for Protection Against Inadvertent Operation, Careless Operation or Rupture of the Suppression System:

(a) Provision of raised supports and equipment

(b) Refer to Section 3.4, “Water Level (Flood) Design,” for drain system.

(12) Fire Containment or Inhibiting Methods Employed:

(a) The function is provided in a fire-resistive enclosure.

(b) Fire stops are provided for penetrations through fire rated barriers.

(c) The means of fire detection, suppression and alarming are provided and accessible.

(13) Remarks:

(a) The total flow of the wet pipe sprinkler system with a 1893 L/min (500 gpm) hose stream allowance is estimated to be 9,615 L/min (2,540 gpm).

(b) Electrical cable insulation in conduit does not represent a combustible fire load.

9A.4.3.2.10 Fire Area –FT1501 (HNCW Chiller Area – Room 248, Instrument and Service Air Equipment Area (Room 111) and Breathing Air Equipment Area - Room 1Y2)

(1) Fire Area Boundary Description

Non fire-resistive walls separate the HNCW chiller are (room 248), instrument and service air system equipment area (room 111) and breathing air system equipment area (room 1Y2). These rooms are part of the same fire area (FT1501).

Fire area FT 1501 is separated by fire-resistive construction from enclosed stairwell no. 3, the elevator shaft, enclosed stairwell no. 1, and the adjacent house boiler area (room 247).

The ceiling in this fire area separates rooms 248 and 111 from the combustion turbine generator area (rooms 317 and 2X8 - FT3500) on floor 1F above and is of fire-resistive construction.

The ceiling in fire area FT1501 provides a fire-resistive separation between rooms 248 and 111 and the combustion turbine generator switchgear room (room 2X5 - FT25X1) on floor 1F above.

The ceiling in fire area FT1501 also provides a fire-resistant separation between rooms 248, 111 and 1Y2 and switchgear room 'B' (room 210 - FT25X3) on floor 1F above.

The HNCW chiller area (room 248), instrument and service air equipment area (room 111) and breathing air equipment area (room 1Y2) are uncontrolled access areas. Fire-resistive concrete construction separates fire area FT1501 from controlled access areas in the Turbine Building associated with fire area FT1500 along cloumn line T8.

The floor beneath FT1501 is concrete basemat.

(2) Equipment - See Table 9A.6-4.

Safety Related	Provides Core Cooling
No	No

(3) Radioactive Material Present - None.

(4) Qualification of Fire Barriers – The interior and exterior walls that enclose fire area FT1501, which includes the HNCW chiller area (room 248), instrument and service air equipment area (room 111) and breathing air equipment area (room 1Y2), are of 3 hour fire-resistive concrete construction with the exception of bounding walls separating this area from enclosed stairwells, elevator shaft, and ceiling.

The ceiling is of a minimum of 1 hour fire-resistive construction.

Enclosed stairwells no. 1 and 3, and the elevator shaft, are of 2 hour fire-resistive concrete construction. These components are described separately in subsections 9A.4.3.2.2, 9A.4.3.2.3, and 9A.4.3.2.5, respectively.

(5) Combustibles Present:

Fire Loading	Total Heat of Combustion (MJ)
(a) Cable in conduit, and dispersed in cable trays	Acceptable
(b) Limited quantity of lubricants in pumps	Negligible

(6) Detection Provided – Class A supervised POC at each building floor elevation and manual pull stations.

Manual Pull Locations: TJ.6-T9.8, TJ.9-T9.1

(7) Suppression Available:

Type	Location/Actuation
Modified Class III standpipes	Stairwells No. 1 <114>
ABC portable (hand) extinguishers and hose stations	TC.8-T8.1, TH.5-T8.3, TC.2-T9.3, TE.1-T9, TF.9-T9, TH.5-T8.3, TJ.9-T9.4, TH.9-T9.4, TF.9-T9.4, TE-T9.9, TC.1-T9.9
Wet pipe sprinkler system Design density: 8.2 L/min-m^2 (0.20 gpm/ft^2) over 1500 ft^2	Rooms 248, 111 and 1Y2

(8) Fire Protection Design Criterial Employed:

(a) Fire detection and suppression capability is provided and accessible.

(b) Fire stops are provided for penetrations through fire rated barriers.

(9) Consequences of Fire - The postulated fire assumes loss of function of the enclosed area and affected equipment. Smoke from a fire would be removed by the normal HVAC system.

(10) Consequences of Fire Suppression - Suppression extinguished the fire. Refer to Section 3.4, “Water Level (Flood) Design,” for drain system.

(11) Design Criteria Used for Protection Against Inadvertent Operation, Careless Operation or Rupture of the Suppression System:

(a) Provision of raised supports for equipment

(b) Refer to Section 3.4, “Water Level (Flood Design,”: for drain system.

(12) Fire Containment or Inhibiting Methods Employed:
   (a) Fire stops are provided for penetrations through fire rated barriers.

   (b) The means of fire detection, suppression and alarming are provided and accessible.

(13) Remarks:
   (a) The total flow of the wet pipe sprinkler system with a 1893 L/min (500 gpm) hose stream allowance is estimated to be 3,596 L/min (950 gpm).

   (b) Electrical cable insulation in conduit does not represent a combustible fire load.

Table 9A.4.3.2 - Summary of Fire Protection Criteria
Floor MB1F

Fire Area	Description	Adjacent Fire Area	Adjacent Fire Area Description	Fire Rated Separation	Fire Separation Criteria	Automatic Suppression Type	Density	Suppression Criteria
FT1500	General Area	FT1503	Stairwell No. 2 (Room 122)	Walls: 2-hour fire resistive Doors: 3-hour fire rated	Walls: NFPA 101, paragraph 8.5.6.(1) Doors: NFPA 101, Table 8.3.4.2	Wet pipe sprinkler	0.30 gpm/ft^2 (12.2 L/min-m^2) over minimum application of 5000 ft^2 (464.5 m^2) Total flow (Est.): 2750 gpm (10,410 L/min)	a) NFPA 804, 2006, paragraph 10.8.2.1(2) (b) NEIL LCM, March 2008, A3.2.20.5.2.1.1.
		FT2502	Stairwell No. 3 (Room 212)	Walls: 2-hour fire resistive Doors: 3-hour fire rated	Walls: NFPA 101, paragraph 8.5.6.(1) Doors: NFPA 101, Table 8.3.4.2			
		FT2504	Stairwell No. 4 (Room 249)	Walls: 2-hour fire resistive Doors: 3-hour fire rated	Walls: NFPA 101, paragraph 8.5.6.(1) Doors: NFPA 101, Table 8.3.4.2			
		FT15X1	Stairwell No. 6 (Room 1X3)	Walls: 2-hour fire resistive Doors: 3-hour fire rated	Walls: NFPA 101, paragraph 8.5.6.(1) Doors: NFPA 101, Table 8.3.4.2			
		FT15X2	Stairwell No. 7 (Room 1X4)	Walls: 2-hour fire resistive Doors: 3-hour fire rated	Walls: NFPA 101, paragraph 8.5.6.(1) Doors: NFPA 101, Table 8.3.4.2			
		FT15Y2	Elevator Shaft (Room 250)	Walls: 2-hour fire resistive Doors: 1 1/2-hour fire rated	NFPA 804, paragraphs 8.1.2.4 and 8.1.2.5			

Table 9A.4.3.2 - Summary of Fire Protection Criteria Floor MB1F (Continued)

Fire Area	Description	Adjacent Fire Area	Adjacent Fire Area Description	Fire Rated Separation	Fire Separation Criteria	Automatic Suppression Type	Density	Suppression Criteria
FT1500	General Area	FT2500	Lube Oil Purification Unit (Room 230)	Walls: 3-hour fire resistive Doors: 3-hour fire rated	NEIL LCM, March 2008, 3.2.9.1 NFPA 804, paragraph 8.1.2.3	Wet pipe sprinkler	0.30 gpm/ft^2 (12.2 L/min-m^2) over minimum application of 5000 ft^2 (464.5 m^2) Total flow (Est.): 2750 gpm (10,410 L/min)	a) NFPA 804, 2006, paragraph 10.8.2.1(2) (b) NEIL LCM, March 2008, A3.2.20.5.2.1.1.
		FT15Y3	Lube Oil Storage Tanks (Room 1Y1)	Walls: 3-hour fire resistive Doors: 3-hour fire rated	NEIL LCM, March 2008, 3.2.9.1 NFPA 804, paragraph 8.1.2.3			
		FT15Y4	EHC Hydraulic Power Unit (Room 232)	Walls: 3-hour fire resistive Doors: 3-hour fire rated	NEIL LCM, March 2008, 3.2.9.1 NFPA 804, paragraph 8.1.2.3			
		FT15X3	Stairwell Access to Radwaste Tunnel (Room 141)	Floor: 3-hour fire rated	NEIL LCM, March 2008, 3.2.9.1 NFPA 804, paragraph 8.1.2.3 Also, based on (IBC) H-4 Occupancy and Type 1A construction Exterior Turbine Bldg. Wall: IBC, 2006, Table 601 Turbine Bldg. Floor over Radwaste Building (treated as separation between buildings): IBC, 2006, Table 601			

Table 9A.4.3.2 - Summary of Fire Protection Criteria
Floor MB1F (Continued)

Fire Area	Description	Adjacent Fire Area	Adjacent Fire Area Description	Fire Rated Separation	Fire Separation Criteria	Automatic Suppression Type	Density	Suppression Criteria
FT1500	General Area	FT2503	House Boiler Area (Room 247)	Wall: 3-hour fire resistive	NEIL LCM, March 2008, 3.2.9.6 NOTE: 3-hour wall is specified based on fuel fired boiler. Specified rating may be reduced in the future due to planned electric boiler.	Wet pipe sprinkler	0.30 gpm/ft^2 (12.2 L/min-m^2) over minimum application of 5000 ft^2 (464.5 m^2) Total flow (Est.): 2750 gpm (10,410 L/min)	a) NFPA 804, 2006, paragraph 10.8.2.1(2) (b) NEIL LCM, March 2008, A3.2.20.5.2.1.1.
		FT1501	HNCW Chiller Area (Room 248), Instrument, Service, and Breathing Air System Equipment Areas (Rooms 111 and 1Y2)	Wall: 2-hour fire resistive	Specified by FPE at this location.			
		External to Turbine Building	Horizontal passageway between Turbine Building and Control Building	Exterior Turbine Bldg. Wall: 3-hour fire resistive Doors: 3-hour fire rated	NEIL LCM, March 2008, 3.2.9.1 NFPA 804, paragraph 8.1.2.3 Also, based on (IBC) H-4 Occupancy and Type 1A construction Exterior Turbine Bldg. Wall: IBC, 2006, Table 601			
FT1503	Stairwell No. 1 (Room 114)	FT1501	HNCW Chiller Area (Room 248), Instrument, Service, and Breathing Air System Equipment Areas (Rooms 111 and 1Y2)	Walls: 2-hour fire resistive Doors: 3-hour fire rated	Walls: NFPA 101, paragraph 8.5.6.(1) Doors: NFPA 101, Table 8.3.4.2	Wet pipe sprinkler	0.15 gpm/ft^2 (6.1 L/min-m^2) over 1500 ft^2 (139 m^2) Total flow (Est.): 850 gpm (3218 L/min)	Ordinary Hazard Group 1 per NFPA 13, paragraph 5.3.1

Table 9A.4.3.2 - Summary of Fire Protection Criteria Floor MB1F (Continued)

Fire Area	Description	Adjacent Fire Area	Adjacent Fire Area Description	Fire Rated Separation	Fire Separation Criteria	Automatic Suppression Type	Density	Suppression Criteria
FT1503	Stairwell No. 1 (Room 114)	External to Turbine Building	Horizontal passageway between Turbine Building and Control Building	Exterior Turbine Bldg. Wall: 3-hour fire resistive	NEIL LCM, March 2008, 3.2.9.1 NFPA 804, paragraph 8.1.2.3 Also, based on (IBC) H-4 Occupancy and Type 1A construction Exterior Turbine Bldg. Wall: IBC, 2006, Table 601	Wet pipe sprinkler	0.15 gpm/ft^2 (6.1 L/min-m^2) over 1500 ft^2 (139 m^2) Total flow (Est.): 850 gpm (3218 L/min)	Ordinary Hazard Group 1 per NFPA 13, paragraph 5.3.1
FT1503	Stairwell No. 2 (Room 122)	FT1500	General Area	Walls: 2-hour fire resistive Doors: 3-hour fire rated	Walls: NFPA 101, paragraph 8.5.6.(1) Doors: NFPA 101, Table 8.3.4.2	Wet pipe sprinkler	0.15 gpm/ft^2 (6.1 L/min-m^2) over 1500 ft^2 (139 m^2) Total flow (Est.): 850 gpm (3218 L/min)	Ordinary Hazard Group 1 per NFPA 13, paragraph 5.3.1
FT2504	Stairwell No. 3 (Room 212)	FT1500	General Area	Walls: 2-hour fire resistive Doors: 3-hour fire rated	Walls: NFPA 101, paragraph 8.5.6.(1) Doors: NFPA 101, Table 8.3.4.2	Wet pipe sprinkler	0.15 gpm/ft^2 (6.1 L/min-m^2) over 1500 ft^2 (139 m^2) Total flow (Est.): 850 gpm (3218 L/min)	Ordinary Hazard Group 1 per NFPA 13, paragraph 5.3.1
		FT15Y2	Elevator Shaft (Room 250)	Walls: 2-hour fire resistive	NFPA 804, paragraphs 8.1.2.4 and 8.1.2.5			
		FT1501	HNCW Chiller Area (Room 248), Instrument, Service, and Breathing Air System Equipment Areas (Rooms 111 and 1Y2)	Walls: 2-hour fire resistive	Walls: NFPA 101, paragraph 8.5.6.(1)			

Table 9A.4.3.2 - Summary of Fire Protection Criteria
Floor MB1F (Continued)

Fire Area	Description	Adjacent Fire Area	Adjacent Fire Area Description	Fire Rated Separation	Fire Separation Criteria	Automatic Suppression Type	Density	Suppression Criteria
FT2504	Stairwell No. 4 (Room 249)	FT1500	General Area	Walls :2-hour fire resistive Doors: 3-hour fire rated	Walls: NFPA 101, paragraph 8.5.6.(1) Doors: NFPA 101, Table 8.3.4.2	Wet pipe sprinkler	0.15 gpm/ft^2 (6.1 L/min-m^2) over 1500 ft^2 (139 m^2) Total flow (Est.): 850 gpm (3218 L/min)	Ordinary Hazard Group 1 per NFPA 13, paragraph 5.3.1
		FT15Y1	Stairwell No. 8	Walls: 3-hour fire resistive	Walls: NFPA 101, paragraph 8.5.6.(1)			
FT15X1	Stairwell No. 6 (Room 1X3)	FT1500	General Area	Walls: 2-hour fire resistive Doors: 3-hour fire rated	Walls: NFPA 101, paragraph 8.5.6.(1) Doors: NFPA 101, Table 8.3.4.2	Wet pipe sprinkler	0.15 gpm/ft^2 (6.1 L/min-m^2) over 1500 ft^2 (139 m^2) Total flow (Est.): 850 gpm (3218 L/min)	Ordinary Hazard Group 1 per NFPA 13, paragraph 5.3.1
FT15X2	Stairwell No. 7 (Room 1X4)	FT1500	General Area	Walls: 2-hour fire resistive Doors: 3-hour fire rated	Walls: NFPA 101, paragraph 8.5.6.(1) Doors: NFPA 101, Table 8.3.4.2	Wet pipe sprinkler	0.15 gpm/ft^2 (6.1 L/min-m^2) over 1500 ft^2 (139 m^2) Total flow (Est.): 850 gpm (3218 L/min)	Ordinary Hazard Group 1 per NFPA 13, paragraph 5.3.1
		FT1501	HNCW Chiller Area (Room 248), Instrument, Service, and Breathing Air System Equipment Areas (Rooms 111 and 1Y2)	Walls: 2-hour fire resistive	Walls: NFPA 101, paragraph 8.5.6.(1)			

Table 9A.4.3.2 - Summary of Fire Protection Criteria
Floor MB1F (Continued)

Fire Area	Description	Adjacent Fire Area	Adjacent Fire Area Description	Fire Rated Separation	Fire Separation Criteria	Automatic Suppression Type	Density	Suppression Criteria
FT15X2	Stairwell No. 7 (Room 1X4)	External to Turbine Building	Horizontal passageway between Turbine Building and Control Building	Exterior Turbine Bldg. Wall: 3-hour fire resistive	NEIL LCM, March 2008, 3.2.9.1 NFPA 804, paragraph 8.1.2.3 Also, based on (IBC) H-4 Occupancy and Type 1A construction Exterior Turbine Bldg. Wall: IBC, 2006, Table 601	Wet pipe sprinkler	0.15 gpm/ft^2 (6.1 L/min-m^2) over 1500 ft^2 (139 m^2) Total flow (Est.): 850 gpm (3218 L/min)	Ordinary Hazard Group 1 per NFPA 13, paragraph 5.3.1
FT15Y1	Stairwell No. 8 (Room 1X4)	FT2504	Stairwell No. 4 (Room 249)	Walls: 3-hour fire resistive	Walls: NFPA 101, paragraph 8.5.6.(1)	Wet pipe sprinkler	0.15 gpm/ft^2 (6.1 L/min-m^2) over 1500 ft^2 (139 m^2) Total flow (Est.): 850 gpm (3218 L/min)	Ordinary Hazard Group 1 per NFPA 13, paragraph 5.3.1
		FT2503	House Boiler Area (Room 247)	Walls: 3-hour fire resistive	Walls: NFPA 101, paragraph 8.5.6.(1)			

Table 9A.4.3.2 - Summary of Fire Protection Criteria Floor MB1F (Continued)

Fire Area	Description	Adjacent Fire Area	Adjacent Fire Area Description	Fire Rated Separation	Fire Separation Criteria	Automatic Suppression Type	Density	Suppression Criteria
FT15Y2	Elevator Shaft (Room 250)	FT1500	General Area	Walls: 2-hour fire resistive Doors: 3-hour fire rated	NFPA 804, paragraphs 8.1.2.4 and 8.1.2.5	Wet pipe sprinkler	0.20 gpm/ft^2 (8.2 L/min-m^2) over 1500 ft^2 (139 m^2) Total flow (Est.): 950 gpm (3596 L/min)	Ordinary Hazard Group 2 per NFPA 13, paragraph 5.3.2
		FT1501	HNCW Chiller Area (Room 248), Instrument, Service, and Breathing Air System Equipment Areas (Rooms 111 and 1Y2)	Walls: 2-hour fire resistive	Walls: NFPA 101, paragraph 8.5.6.(1)			
		FT2502	Stairwell No. 3 (Room 212)	Walls: 2-hour fire resistive Doors: 3-hour fire rated	Walls: NFPA 101, paragraph 8.5.6.(1) Doors: NFPA 101, Table 8.3.4.2			
FT2500	Lube Oil Purification Unit (Room 230)	FT1500	General Area	Walls: 3-hour fire resistive Doors: 3-hour fire rated Floor: 3-hour fire resistive Ceiling: 3-hour fire resistive	NEIL LCM, paragraph 3.2.9.1 NFPA 804, paragraph 8.1.2.3	Deluge Foam Water Spray	0.50 gpm/ ft^2 (20.4 L/min-m^2) over the entire area (Est. 640 ft^2 (59.5 m^2)) Total flow (Est.): 980 gpm (3710 L/min)	NEIL LCM, paragraph 3.2.20.5 and Appendix A.3.2.20.5 NFPA 15, paragraphs 7.2.1.3 and 7.3.3 NFPA 16, paragraph 7.3.2 and Appendix A.7.3.2

Table 9A.4.3.2 - Summary of Fire Protection Criteria Floor MB1F (Continued)

Fire Area	Description	Adjacent Fire Area	Adjacent Fire Area Description	Fire Rated Separation	Fire Separation Criteria	Automatic Suppression Type	Density	Suppression Criteria
FT15Y3	Lube Oil Storage Tanks (Room 1Y1)	FT1500	General Area	Walls: 3-hour fire resistive Doors: 3-hour fire rated Floor: 3-hour fire resistive Ceiling: 3-hour fire resistive	NEIL LCM, paragraph 3.2.9.1 NFPA 804, paragraph 8.1.2.3	Deluge Foam Water Spray	0.50 gpm/ ft^2 (20.4 L/min-m^2) over the entire area (Est. 1400 ft^2 (130 m^2)) Total flow (Est.): 1550 gpm (5867 L/min)	NEIL LCM, paragraph 3.2.20.5 and Appendix A.3.2.20.5 NFPA 15, paragraphs 7.2.1.3 and 7.3.3 NFPA 16, paragraph 7.3.2 and Appendix A.7.3.2
FT15Y4	EHC Hydraulic Power Unit (Room 232)	FT1500	General Area	Walls: 3-hour fire resistive Doors: 3-hour fire rated Floor: 3-hour fire resistive Ceiling: 3-hour fire resistive	NEIL LCM, paragraph 3.2.9.1 NFPA 804, paragraph 8.1.2.3	Deluge Foam Water Spray	0.50 gpm/ ft^2 (20.4 L/min-m^2) over the entire area (Est. 1120 ft^2 (104 m^2)) Total flow (Est.): 1340 gpm (5072 L/min)	NEIL LCM, paragraph 3.2.20.5 and Appendix A.3.2.20.5 NFPA 15, paragraphs 7.2.1.3 and 7.3.3 NFPA 16, paragraph 7.3.2 and Appendix A.7.3.2

Table 9A.4.3.2 - Summary of Fire Protection Criteria Floor MB1F (Continued)

Fire Area	Description	Adjacent Fire Area	Adjacent Fire Area Description	Fire Rated Separation	Fire Separation Criteria	Automatic Suppression Type	Density	Suppression Criteria
FT2503	House Boiler Area (Room 247)	FT1500	General Area	Wall: 3-hour fire resistive	NEIL LCM, March 2008, 3.2.9.6 NOTE: 3-hour wall is specified based on fuel fired boiler. Specified rating may be reduced in the future due to planned electric boiler.	Wet pipe sprinkler	0.25 gpm/ft^2 (10.2 L/min-m^2) over 5440 ft^2 (505 m^2) – entire area Total flow (Est.): 2540 gpm (9615 L/min)	NEIL LCM, paragraph 3.2.20.5 NFPA 804, paragraph 10.24.3
		FT1501	HNCW Chiller Area (Room 248), Instrument, Service, and Breathing Air System Equipment Areas (Rooms 111 and 1Y2)	Walls: 3-hour fire resistive Doors: 3-hour fire rated	NEIL LCM, March 2008, 3.2.9.6 NOTE: 3-hour wall is specified based on fuel fired boiler. Specified rating may be reduced in the future due to planned electric boiler.			
FT2503	House Boiler Area (Room 247)	FT15Y1	Stairwell No. 8	Walls: 3-hour fire resistive	Walls: NFPA 101, paragraph 8.5.6.(1)	Wet pipe sprinkler	0.25 gpm/ft^2 (10.2 L/min-m^2) over 5440 ft^2 (505 m^2) – entire area Total flow (Est.): 2540 gpm (9615 L/min)	NEIL LCM, paragraph 3.2.20.5 NFPA 804, paragraph 10.24.3

Table 9A.4.3.2 - Summary of Fire Protection Criteria Floor MB1F (Continued)

Fire Area	Description	Adjacent Fire Area	Adjacent Fire Area Description	Fire Rated Separation	Fire Separation Criteria	Automatic Suppression Type	Density	Suppression Criteria
FT1501	HNCW Chiller Area (Room 248), Instrument, Service, and Breathing Air System Equipment Areas (Rooms 111 and 1Y2)	FT1500	General Area	Wall: 2-hour fire resistive	Specified by FPE at this location.	Wet pipe sprinkler	0.20 gpm/ft^2 (8.2 L/min-m^2) over 1500 ft^2 (139 m^2) Total flow (Est.): 950 gpm (3596 L/min)	Ordinary Hazard Group 2 per NFPA 13, paragraph 5.3.2
		FT2502	Stairwell No. 3 (Room 212)	Walls: 2-hour fire resistive Doors: 3-hour fire rated	Walls:NFPA 101, paragraph 8.5.6.(1) Doors:NFPA 101, Table 8.3.4.2			
		FT15Y2	Elevator Shaft (Room 250)	Walls: 2-hour fire resistive	NFPA 804, paragraphs 8.1.2.4 and 8.1.2.5			
		FT1503	Stairwell No. 1 (Room 114)	Walls: 2-hour fire resistive Doors: 3-hour fire rated	Walls:NFPA 101, paragraph 8.5.6.(1) Doors:NFPA 101, Table 8.3.4.2			
		FT3500	Combustion Turbine Generator Area (Rooms 2X8 and 317)	Ceiling: 3-hour fire resistive	NFPA 804, paragraph 8.1.2.3			
		FT25X1	Combustion Turbine Generator Switchgear Area (Room 2X5)	Ceiling: Minimum 1-hour fire resistive	NEIL LCM, March 2008, 3.2.9.5 NFPA 13, paragraph 8.15.10			
		FT25X3	Switchgear Room ‘A’ (Room 210)	Ceiling: Minimum 1-hour fire resistive	NEIL LCM, March 2008, 3.2.9.5 NFPA 13, paragraph 8.15.10			

Table 9A.4.3.2 - Summary of Fire Protection Criteria
Floor MB1F (Continued)

Fire Area	Description	Adjacent Fire Area	Adjacent Fire Area Description	Fire Rated Separation	Fire Separation Criteria	Automatic Suppression Type	Density	Suppression Criteria
FT1501	HNCW Chiller Area (Room 248), Instrument, Service, and Breathing Air System Equipment Areas (Rooms 111 and 1Y2)	FT2503	House Boiler Area (Room 247)	Walls: 3-hour fire resistive Doors: 3-hour fire rated	NEIL LCM, March 2008, 3.2.9.6 NOTE: 3-hour wall is specified based on fuel fired boiler. Specified rating may be reduced in the future due to planned electric boiler.	Wet pipe sprinkler	0.20 gpm/ft^2 (8.2 L/min-m^2) over 1500 ft^2 (139 m^2) Total flow (Est.): 950 gpm (3596 L/min)	Ordinary Hazard Group 2 per NFPA 13, paragraph 5.3.2
		External to Turbine Building	Horizontal passageway between Turbine Building and Control Building	Exterior Turbine Bldg. Wall: 3-hour fire resistive Doors: 3-hour fire rated	NEIL LCM, March 2008, 3.2.9.1 NFPA 804, paragraph 8.1.2.3 Also, based on (IBC) H-4 Occupancy and Type 1A construction Exterior Turbine Bldg. Wall: IBC, 2006, Table 601			

9A.4.3.3 Floor 1F (El. 12.3m (35'-0")) – See Figure 9A.4-19 and Table 9A.4.3.3 Summary of Fire Protection Criteria Floor 1F

9A.4.3.3.1 Fire Area – FT1500 (General Area)

(1) Fire Area Boundary Description

Floor 1F shares fire area FT1500 with all other floors in the Turbine Building.

Non fire-rated equipment access hatches are installed in the floor between floor 1F and floor MB1F in the northwest corridor area (room 242).

Non-fire rated equipment access hatches exist in the ceiling of the condensate filter vessel area (room 241) beneath the condensate filter maintenance area (room 342) on floor 2F above.

Additionally, a large non fire-rated equipment hatch is installed in the ceiling above the unloading bay leading to floor 2F above.

The offgas charcoal adsorber area (room 112) extends vertically upward from floor B1F through floors MB1F and 1F to the underside of floor 2F (elevation 19.7m (59'-3 ½")). In room 112, a non fire-rated equipment access hatch is installed at room ceiling level, elevation 19.7m (59'-3 ½") (floor 2F).

The low pressure condensate pump area (room 140) extends vertically up from floor B1F, through floors MB1F, 1F and 2F, to and through an non-fire rated equipment hatch in the turbine operating deck floor (floor 3F, elevation 27.8m (85'-10 ½"))

The steam jet air ejector area (room 311) and gland seal steam condenser area (room 314) extend vertically up from floor 1F, through floor 2F, to and through an non-fire rated equipment hatch in the operating deck floor (floor 3F, elevation 27.8m (85'-10 ½")).

Access to the offgas charcoal adsorber area (room 112) is from floor 1F with open grating is installed at this floor level.

Fire area FT1500 is bounded by:

- The Turbine Building exterior walls
- The exterior walls separating stairwell no. 2 (room 122, fire area FT1503)
- The interior walls enclosing stairwell no. 3 (room 212, fire area FT2502)
- The interior walls enclosing stairwell no. 4 (room 249, fire area FT2504)
- The interior walls enclosing stairwell no. 6 (room 1X3, fire area FT15X1)

- The interior walls enclosing stairwell no. 7 (room 1X4, fire area FT15X2)
- The interior walls enclosing the elevator shaft (room 250, fire area FT15Y2)
- The floor above the area housing the lube oil purification unit (room 230, fire area FT2500) on floor MB1F
- The floor above the area housing the lube oil storage tanks (room 1Y1, fire area FT15Y3) on floor MB1F
- The floor above the area housing the EHC hydraulic power unit (room 232, fire area FT15Y4) on floor MB1F
- The interior wall between the house boiler area (room 247, fire area FT2503) and this fire area, along building column line T8.
- The interior wall between the combustion turbine generator auxiliary equipment area (room 2X8, fire area FT3500) and this fire area, along column line T8
- The interior wall between the combustion gas turbine switchgear area (room 2X5, fire area FT25X1) and this fire area, along column line T8
- The interior wall between switchgear room 'A' (room 210, fire area FT25X3) and this fire area, along column line T8
- The ceiling between this fire area and the Main Turbine Lube Oil Tank area (room 330, fire area FT3501)
- The ceiling between this fire area and the Generator Seal Oil Unit area (room 3X2, fire area FT35X9)
- The ceiling between this fire area and the Low Pressure Condensate Pump Switchgear area (room 31X-2, fire area FT35X1)

(2) Equipment – See Table 9A.6-4

Safety Related	Provides Core Cooling
No	No

(3) Radioactive Material Present – None that can be released as a result of fire.

(4) Qualification of Fire Barriers –

The Turbine Building is classified as Type IA construction in accordance with the International Building Code (IBC), 2006. Type IA construction is non-combustible. The building structural frame, and all exterior and interior bearing walls, are required to be of 3 hour fire-resistive construction. The building floor is required to be of not less than 2 hour fire resistive

construction, including supporting beams and joists. Also, the building roof is required to be of not less than 1 ½ hour fire resistive construction.

The enclosed stairwells that serve floor 1F, stairwell nos. 1, 2, 3, 4, 6, 7 and 8 are of 2 hour fire-resistive concrete construction.

Enclosed stairwell nos. 2, 4, 6, and 7 are separate fire areas and are discussed in subsections 9A.4.3.1.2 through 9A.4.3.1.5 (fire areas FT1503, FT2504, FT15X1, and FT15X2).

Enclosed stairwells 1, 3 and 8 are described in subsections 9A.4.3.2.2 through 9A.4.3.2.4 (fire areas FT1502, FT2502 and FT15Y1), respectively.

The elevator shaft (room 250) is of 2 hour fire-resistive concrete construction, is a separate fire area (FT15Y2), and is described in subsection 9A.4.3.2.5.

Floor areas on this level located above the lube oil purification unit (room 230, fire area FT2500), lube oil storage tank area (room 1Y1, fire area FT15Y3), and the EHC hydraulic power unit (room 232, fire area FT15Y4) are of 3 hour fire-resistive construction. These rooms are described as separate fire areas in subsections 9A.4.3.2.6 through 9A.4.3.2.8, respectively.

The house boiler area (room 247, fire area FT2503) is separated from fire area FT1500 by 3 hour fire-resistive concrete construction along building column line T8. The fire area (FT2503) associated with room 247 is addressed in subsection 9A.4.3.2.9.

The combustion turbine generator area (rooms 317 and 2X8, fire area FT3500) is separated from FT1500 on floor 1F by 3 hour fire-resistive concrete construction along building column line T8. Fire area FT3500 is discussed in subsection 9A.4.3.3.2.

Combustion turbine generator switchgear (room 2X5, fire area FT25X1) is separated from fire area FT1500 by 3 hour fire-resistive concrete construction along column line T8. This fire area is described in subsection 9A.4.3.3.3.

Fire area FT1500 is separated from the area housing switchgear room ‘A’ (room 210, fire area FT25X3) by 2 hour fire-resistive concrete construction along column line T8. Fire area FT25X3 is described in subsection 9A.4.3.3.4.

The Turbine Building is separated from the horizontal passageway that runs exterior and parallel to the southernmost building wall by 3 hour fire-resistive concrete construction. This horizontal passageway provides a protected exit and access from the Turbine Building to the Control Building and Service Building.

The exterior Turbine Building walls are of 3 hour fire-resistive concrete construction, consistent with the requirements of the IBC.

The ceiling between this fire area and areas on floor 2F above is 3 hour fire-resistive concrete construction. These areas include the Main Turbine Lube Oil Tank area (room 330, fire area FT3501, Safety Related Low Pressure Condensate Pump Switchgear (room 31X-2, fire area FT35X1), and the Generator Seal Oil Unit (room 3X2, FT35X9).

(5) Combustibles Present:

Fire Loading	Total Heat of Combustion (MJ)
(a) Cable in conduit, and less than the equivalent of 0.6m cable trays	Acceptable
(b) Limited quantities of lubricants in pumps	Negligible
(c) Charcoal in offgas charcoal bed	Does not contribute to fire loading

(6) Detection Provided – Class A supervised POC, and manual alarm pull stations.

Manual Pull Locations: TA.4-T7.5, TH.5-T7.9, TJ.7-T7.5, TJ.6-T2.2, TG.2-T2, TJ.9-T8.1.

(7) Suppression Available:

Type	Location/Actuation
Modified Class III standpipes	Stairwells No. 1 <114>, No.2 <122>, No.3 <212>, No.4 <249>, No.6 <1X3>, No.7 <1X4>, and No.8 <1Y5>
ABC portable (hand) extinguishers and hose stations	TA.1-T2.7, TA.9-T4.8, TA.1-T6.4, TB.6-T7.8, TD.4-T7.8, TF.3-T7.8, TH.2-T7.8, TH.1-T6, TH.7-T4.9, TH.9-T2.8, TG.2-T2.1, TB.4-T1.2, TC.5-T2.9, TB.1-T.29, TB.7-T3.4, TC.5-T5, TB.9-T6, TC.6-T6.9, TE.3-T6.9, TJ.9-T6.6, TJ.1-T5.9, TJ.9-T5.2, TJ.1-T4.3, TJ.9-T3.3,
Wet pipe sprinkler system Design density 12.2 L/min-m^2 (0.3 gpm/ft^2) over 464.5 m^2 (5000 ft^2)	Throughout floor 1F

(8) Fire Protection Design Criteria Employed:

(a) Fire detection and suppression capability is provided and accessible;

(b) Fire stops are provided for penetrations through rated fire barriers.

(9) Consequences of Fire – Postulated fire assumes loss of function. Smoke from a fire would be removed by the normal HVAC system except for the following rooms:

(a) Rooms 314 and 344 by normal HVAC and process exhaust

(10) Consequences of Fire Suppression – Suppression extinguishes the fire. Refer to Section 3.4, “Water Level (Flood) Design,” for drain system.

(11) Design Criteria Used for Protection Against Inadvertent Operation, Careless Operation or Rupture of the Suppression System:

(a) Provision of raised supports for the equipment

(b) Refer to Section 3.4, “Water Level (Flood) Design,” for drain system.

(12) Fire Containment or Inhibiting Methods Employed:

(a) Fire stops are provided for penetrations through fire rated barriers.

(b) The means of fire detection, suppression and alarming are provided and accessible.

(13) Remarks:

(a) Smoke detectors, and temperature controllers are mounted in the exhaust duct of the offgas system to detect any fire in the charcoal beds. The fire is contained by isolating the charcoal adsorber vessel and purging the vessel with nitrogen gas.

(b) Electrical cable insulation in conduit does not represent a combustible fire load.

(c) The total flow of the wet pipe sprinkler system on floor 1F with a 1893 L/min (500 gpm) hose stream allowance is estimated to be 10,410 L/min (2750 gpm).

9A.4.3.3.2 Fire Area – FT3500 (Combustion Turbine Generator Area – Rooms 317 and 2X8)

(1) Fire Area Boundary Description

The combustion turbine generator area (room 317) and associated equipment area (room 2X8) are bounded by concrete fire-resistive wall, floor and ceiling construction.

Adjacent fire areas include the house boiler area (room 247, fire area FT2503), switchgear room 'A' (room 210, fire area FT25X3), the combustion turbine generator switchgear room (room 2X5, fire area FT25X1), and enclosed stairwell no. 8 (room 1Y5, fire area FT15Y1).

The combustion turbine generator area is located above the HNCW chiller area (room 248) and instrument and service air equipment area (room 111) on floor MB1F below (fire area FT1501). The floor separating fire area FT3500 and FT1501 is of fire-resistive concrete construction.

Combustion turbine generator room 317 extends vertically upward from floor 1F, through floor 2F, to the underside of the roof deck at elevation 27.8m.

(2) Equipment – See Table 9A.6-4

Safety Related	Provides Core Cooling
No	No

(3) Radioactive Material Present – None.

(4) Qualification of Fire Barriers – The interior and exterior walls enclosing the combustion turbine generator area (rooms 317 and 2X8, FT3500), except for walls enclosing stairwell no. 8, are of 3 hour fire-resistive concrete construction.

Stairwell no. 8 is of 2 hour fire-resistive concrete construction and is described in subsection 9A.4.3.2.4.

The floor in rooms 317 and 2X8 is of 3 hour fire resistive concrete construction.

Combustion turbine generator room 317 extends vertically upward to the roof deck at elevation 27.8m. The ceiling (and roof deck) is of 1 ½ hour fire-resistive concrete construction consistent with the requirements for a Type IA structure described in the IBC.

The ceiling above the combustion turbine generator equipment area (room 2X8) is of 3 hour fire-resistive concrete construction.

(5) Combustibles Present:

Fire Loading	Total Heat of Combustion (MJ)
Turbine lube oil tank, Capacity 189 L (50 gal.) (Est.)	7,915 MJ (7,501,972 Btu)
Generator lube oil tank, Capacity 1 325 L (350 gal.) (Est.)	55,405 MJ (52,513,805 Btu)
Fuel oil day tank, No. 2 Diesel Capacity 2000 gal. (Est.)	289,600 MJ (274,487,826 Btu)
Fuel filtering and metering, No. 2 Diesel, Capacity 114 L (30 gal.) (Est.)	4,344 MJ (4,117,317 Btu)
Hydraulic start package, Hydraulic fluid Capacity 378 L (100 gal.) (Est.)	14,000 MJ (13,269,439 Btu)
Diesel starter day tank, No. 2 Diesel Capacity 4 542 L (1,200 gal.) (Est.)	173,760 MJ (164,692,695 Btu)
Diesel starter lube oil tank, Capacity 189 L (50 gal.) (Est.)	7,915 MJ (7,501,972 Btu)

(6) Detection Provided – Class A supervised rate compensated thermal detectors. The detection system is a cross zoned system requiring two detectors, one in each zone, to sense fire before initiating the suppression system. Manual alarm pull stations at exits.

(7) Suppression Available:

Type	Location/Actuation
Modified Class III standpipe	Stairwell No. 1 <114>
ABC portable (hand) extinguishers and hose stations'	TC.1-T8.2, TD-T8.9, TD.9-T8.2, TA.1-T9.3, TB.9-T9.1, TD.8-T9.1, TF.4-T9.5, TB.9-T9.9, TD.8-T9.9
Deluge foam water sprinkler system Design density 12.2 L/min-m^2 (0.3 gpm/ft^2) over 464.5 m^2 (5000 ft^2)	Rooms 317 and 2X8

(8) Fire Protection Design Criteria Employed:

(a) Rooms 317 and 2X8 are configured as a separate fire-resistive enclosure.

(b) Fire detection and suppression capability is provided and accessible.

(c) Fire stops are provided for penetrations through rated fire barriers.

(9) Consequences of Fire – The postulated fire assumes loss of function of the enclosed area and affected equipment. Smoke from a fire would be removed by the normal HVAC system.

(10) Consequences of Fire Suppression – Suppression extinguishes the fire. Refer to Section 3.4, “Water Level (Flood) Design,” for drain system.

(11) Design Criteria Used for Protection Against Inadvertent Operation, Careless Operation or Rupture of the Suppression System:

(a) Location of the manual suppression system external to the room

(b) Provision of raised supports for equipment

(c) Refer to Section 3.4, “Water Level (Flood) Design,” for drain system.

(d) Cross zoned detectors for initiation of deluge system

(12) Fire Containment or Inhibiting Methods Employed:

(a) Fire stops are provided for penetrations through fire rated barriers.

(b) The means of fire detection, suppression and alarming are provided and accessible.

(13) Remarks: The total flow of the wet pipe sprinkler system on floor 1F with a 1893 L/min (500 gpm) hose stream allowance is estimated to be 10,410 L/min (2750 gpm).

9A.4.3.3.3 Fire Area –FT25X1 (Combustion Turbine Generator Switchgear - Room 2X5)

(1) Fire Area Boundary Description

The combustion turbine generator switchgear area (room 2X5) is bounded by a concrete fire-resistive wall, floor and ceiling construction.

Adjacent fire areas include the combustion turbine generator area (rooms 317 and 2XS, fire area FT3500), switchgear room ‘A’ (room 210, fire area FT25X3), and the controlled access areas on floor 1F in the Turbine Building (fire area FT1500).

Fire-resistive concrete construction separates the switchgear room ‘A’ from fire area FT1500 along column line T8.

(2) Equipment – See Table 9A.6-4

Safety Related	Provides Core Cooling
No	No

(3) Radioactive Material Present – None.

(4) Qualification of Fire Barriers – The combustion turbine generator switchgear room (room 2X5) is separated from the combustion turbine generator area (rooms 317 and 2X8) by 3 hour fire-resistive concrete construction.

The interior separation between room 2X5 and fire area FT1500 at column line T8 is of 2 hour fire-resistive concrete construction. Additionally, the separation between the combustion turbine switchgear room (room 2X5) and switchgear room 'A' is a minimum of 1 hour fire-resistive construction

The ceiling and floor in room 2X5 are of a minimum 1 hour fire-resistive concrete construction.

(5) Combustibles Present:

Fire Loading	Total Heat of Combustion (MJ)
Cable in conduit	Acceptable
Cable Trays	1454 MJ/m^2 (0.1425 Btu/ft^2) ECLL (maximum average) applies

(6) Detection Provided – Class A supervised POC at each building floor elevation and manual pull station external to the enclosed stairway at each floor elevation.

(7) Suppression Available:

Type	Location/Actuation
Modified Class III standpipe	Stairwell No. 1 <114>
ABC portable (hand) extinguisher and hose station	TF.4-TB.3
Wet Pipe Sprinkler Design density: 8.2 L/min-m^2 (0.20 gpm/ft^2) over 1500 ft^2	Room 2X5

(8) Fire Protection Design Criteria Employed:

Fire detection and suppression capability is provided and accessible.

Fire stops are provided for penetrations through fire rated barriers.

(9) Consequences of Fire – The postulated fire assumes loss of function. Smoke from a fire would be removed by the normal HVAC system.

(10) Consequences of Fire Suppression – Suppression extinguishes the fire. Refer to Section 3.4, "Water Level (Flood) Design," for drain system.

(11) Design Criteria Used for Protection Against Inadvertent Operation, Careless Operation or Rupture of the Suppression System:

(a) Provision of raised supports for equipment.

(b) Refer to Section 3.4, “Water Level (Flood) Design,” for drain system.

(12) Fire Containment or Inhibiting Methods Employed:

(a) Fire stops are provided for penetrations through fire rated barriers.

(b) The means of fire detection, suppression and alarming are provided and accessible.

(13) Remarks:

(a) The total flow of the wet pipe sprinkler system with a 1893 L/min (500 gpm) hose stream allowance is estimated to be 3,596 L/min (950 gpm).

(b) Electrical cable insulation in conduit does not represent a combustible fire load.

9A.4.3.3.4 Fire Area –FT25X3 (Switchgear Room ‘A’ - Room 210)

(1) Fire Area Boundary Description

Switchgear room ‘A’ is bounded by a concrete fire-resistive wall, floor and ceiling construction.

Adjacent fire areas include the combustion turbine generator area (room 317, fire area FT3500), the combustion turbine generator switchgear area (room 2X5, fire area FT25X1), the controlled access areas on floor 1F in the Turbine Building (fire area FT1500), enclosed stairwell no. 1 (room 114, fire area FT1502), enclosed stairwell no. 3 (room no. 212, fire area FT2502), and the elevator shaft (room no. 250, fire area FT15Y2).

The ceiling of Room 210 is of fire-resistive concrete construction, separating switchgear room ‘A’ from switchgear room ‘B’ (room 310, fire area FTFT35X8), 250Vdc battery rooms (rooms 3X4, fire area FT35X3, and 3X5, fire area FT35X2), and electrical equipment area (room 3X9, fire area FT35X7), on floor 2F above.

The floor of Room 110 is of fire-resistive concrete construction to separate this electrical switchgear area from the HNCW chiller area and breathing air system equipment area (rooms 248 and 1Y2, fire area FT1501) on floor MB1F below.

A fire-rated equipment hatch is installed in the floor of room 210 providing equipment access to the HNCW chiller area (room 248) below.

(2) Equipment – See Table 9A.6-4

Safety Related	Provides Core Cooling
No	No

(3) Radioactive Material Present – None.

(4) Qualification of Fire Barriers – Switchgear room 'A' (room 210) is separated from the combustion turbine generator area (room 317) by 3 hour fire-resistive concrete construction.

Room 210 is separated from stairwell no. 1 (room 114, fire area FT1502), stairwell no. 3 (room 212, fire area FT2502), and the elevator shaft (room 250, fire area FT15Y2), by 2 hour fire-resistive concrete construction. These fire-resistive separations are described in subsections 9A.4.3.2.2, 9A.4.3.2.3, and 9A.4.3.2.5, respectively.

Separation from the combustion turbine generator switchgear room is a minimum of a 1 hour fire-resistive construction with a minimum of a ¾ hour fire rated (doors are 3-hour fire rated for consistency throughout the Turbine Building).

The interior separation between switchgear room 'A' (room 210) and fire area FT1500 at column line T8 is of 2 hour fire-resistive concrete construction.

The ceiling and floor in room 210 are of a minimum 1 hour fire-resistive concrete construction.

(5) Combustibles Present:

Fire Loading	Total Heat of Combustion (MJ)
Cable in conduit	Acceptable
Cable trays	1454 MJ/m^2 (0.1425 Btu/ft^2) ECLL (maximum average) applies

(6) Detection Provided – Class A supervised POC at each building floor elevation and manual pull station external to the enclosed stairway at each floor elevation.

Manual Pull Locations: TJ.5-T10

(7) Suppression Available:

Type	Location/Actuation
Modified Class III standpipe	Stairwell No. 1 <114>
ABC portable (hand) extinguishers and hose stations	TG.1-T9, TH.9-T9
Wet Pipe Sprinkler Design density: 8.2 L/min-m^2 (0.20 gpm/ft^2) over 1500 ft^2	Room 210

(8) Fire Protection Design Criteria Employed:

(a) Fire detection and suppression capability is provided and accessible.

(b) Fire stops are provided for penetrations through fire rated barriers.

(9) Consequences of Fire – The postulated fire assumes loss of function. Smoke from a fire would be removed by the normal HVAC system.

(10) Consequences of Fire Suppression – Suppression extinguishes the fire. Refer to Section 3.4, “Water Level (Flood) Design,” for drain system.

(11) Design Criteria Used for Protection Against Inadvertent Operation, Careless Operation or Rupture of the Suppression System:

(a) Provision of raised supports for equipment.

(b) Refer to Section 3.4, “Water Level (Flood) Design,” for drain system.

(12) Fire Containment or Inhibiting Methods Employed:

(a) Fire stops are provided for penetrations through fire rated barriers.

(b) The means of fire detection, suppression and alarming are provided and accessible.

(13) Remarks:

(a) The total flow of the wet pipe sprinkler system with a 1893 L/min (500 gpm) hose stream allowance is estimated to be 3,596 L/min (950 gpm).

(b) Electrical cable insulation in conduit does not represent a combustible fire load.

Table 9A.4.3.3 - Summary of Fire Protection Criteria
Floor 1F

Fire Area	Description	Adjacent Fire Area	Adjacent Fire Area Description	Fire Rated Separation	Fire Separation Criteria	Automatic Suppression Type	Density	Suppression Criteria
FT1500	General Area	FT1503	Stairwell No. 2 (Room 122)	Walls: 3-hour fire resistive Doors: 3 - hour fire rated	NEIL LCM, March 2008, 3.2.9.1 NFPA 804, paragraph 8.1.2.3 Also, based on (IBC) H-4 Occupancy and Type 1A construction Exterior Turbine Bldg. Wall: IBC, 2006, Table 601 Turbine Bldg. Floor over Radwaste Building (treated as separation between buildings): IBC, 2006, Table 601 Walls: NFPA 101, paragraph 8.5.6.(1) Doors: NFPA 101, Table 8.3.4.2	Wet pipe sprinkler	0.30 gpm/ft^2 (12.2 L/min-m^2) over minimum application of 5000 ft^2 (464.5 m^2) Total flow (Est.): 2750 gpm (10,410 L/min)	a) NFPA 804, 2006, paragraph 10.8.2.1(2) (b) NEIL LCM, March 2008, A3.2.20.5.2.1.1.
		FT2502	Stairwell No. 3 (Room 212)	Walls: 2-hour fire resistive Doors: 3-hour fire rated	Walls: NFPA 101, paragraph 8.5.6.(1) Doors: NFPA 101, Table 8.3.4.2			
		FT2504	Stairwell No. 4 (Room 249)	Walls: 2-hour fire resistive Doors: 3-hour fire rated	Walls: NFPA 101, paragraph 8.5.6.(1) Doors: NFPA 101, Table 8.3.4.2			
		FT15X1	Stairwell No. 6 (Room 1X3)	Walls: 2-hour fire resistive Doors: 3-hour fire rated	Walls: NFPA 101, paragraph 8.5.6.(1) Doors: NFPA 101, Table 8.3.4.2			

Table 9A.4.3.3 - Summary of Fire Protection Criteria Floor 1F (Continued)

Fire Area	Description	Adjacent Fire Area	Adjacent Fire Area Description	Fire Rated Separation	Fire Separation Criteria	Automatic Suppression Type	Density	Suppression Criteria
FT1500	General Area	FT15X2	Stairwell No. 7 (Room 1X4)	Walls: 2-hour fire resistive Doors: 3-hour fire rated	Walls: NFPA 101, paragraph 8.5.6.(1) Doors: NFPA 101, Table 8.3.4.2	Wet pipe sprinkler	0.30 gpm/ft^2 (12.2 L/min-m^2) over minimum application of 5000 ft^2 (464.5 m^2) Total flow (Est.): 2750 gpm (10,410 L/min)	a) NFPA 804, 2006, paragraph 10.8.2.1(2) (b) NEIL LCM, March 2008, A3.2.20.5.2.1.1.
		FT15Y2	Elevator Shaft (Room 250)	Walls: 2-hour fire resistive Doors: 3-hour fire rated	NFPA 804, paragraphs 8.1.2.4 and 8.1.2.5			
		FT2500	Lube Oil Purification Unit (Room 230)	Floor: 3-hour fire resistive	NEIL LCM, March 2008, 3.2.9.1 NFPA 804, paragraph 8.1.2.3			
		FT15Y3	Lube Oil Storage Tanks (Room 1Y1)	Floor: 3-hour fire resistive	NEIL LCM, March 2008, 3.2.9.1 NFPA 804, paragraph 8.1.2.3			
		FT15Y4	EHC Hydraulic Power Unit (Room 232)	Floor: 3-hour fire resistive	NEIL LCM, March 2008, 3.2.9.1 NFPA 804, paragraph 8.1.2.3			
		FT2503	House Boiler Area (Room 247)	Wall: 3-hour fire resistive	NEIL LCM, March 2008, 3.2.9.6 NOTE: 3-hour wall is specified based on fuel fired boiler. Specified rating may be reduced in the future due to planned electric boiler.			
		FT3500	Combustion Turbine Generator Area (Rooms 317 and 2X8)	Wall: 3-hour fire resistive	NFPA 804, paragraph 8.1.2.3			

Table 9A.4.3.3 - Summary of Fire Protection Criteria Floor 1F (Continued)

Fire Area	Description	Adjacent Fire Area	Adjacent Fire Area Description	Fire Rated Separation	Fire Separation Criteria	Automatic Suppression Type	Density	Suppression Criteria
FT1500	General Area	FT25X1	Combustion Turbine Generator Switchgear (Room 2X5)	Wall: 2-hour fire resistive	Specified by FPE at this location. NEIL LCM, March 2008, 3.2.9.5 NFPA 13, paragraph 8.15.10	Wet pipe sprinkler	0.30 gpm/ft^2 (12.2 L/min-m^2) over minimum application of 5000 ft^2 (464.5 m^2) Total flow (Est.): 2750 gpm (10,410 L/min)	a) NFPA 804, 2006, paragraph 10.8.2.1(2) (b) NEIL LCM, March 2008, A3.2.20.5.2.1.1.
		FT25X3	Switchgear Room 'A' (Room 210)	Wall: 2-hour fire resistive	Specified by FPE at this location. NEIL LCM, March 2008, 3.2.9.5 NFPA 13, paragraph 8.15.10			
		FT2505	Main Steam Tunnel (Room 219)	Exterior Turbine Bldg. Wall: 3-hour fire resistive	NEIL LCM, March 2008, 3.2.9.1 NFPA 804, paragraph 8.1.2.3 Also, based on (IBC) H-4 Occupancy and Type 1A construction Exterior Turbine Bldg. Wall: IBC, 2006, Table 601			
		FT3501	Main Turbine Lube Oil Tank (Room 330)	Ceiling: 3-hour fire resistive	NEIL LCM, March 2008, 3.2.9.1 NFPA 804, paragraph 8.1.2.3			
		FT35X1	Safety Related Low Pressure Condensate Switchgear (Room 31X-2)	Ceiling: 3-hour fire resistive	NEIL LCM, March 2008, 3.2.9.1			

Table 9A.4.3.3 - Summary of Fire Protection Criteria
Floor 1F (Continued)

Fire Area	Description	Adjacent Fire Area	Adjacent Fire Area Description	Fire Rated Separation	Fire Separation Criteria	Automatic Suppression Type	Density	Suppression Criteria
FT1500	General Area	FT35X9	Generator Seal Oil Unit (Room 3X2)	Ceiling: 3-hour fire resistive	NEIL LCM, March 2008, 3.2.9.1	Wet pipe sprinkler	0.30 gpm/ft^2 (12.2 L/min-m^2) over minimum application of 5000 ft^2 (464.5 m^2) Total flow (Est.): 2750 gpm (10,410 L/min)	a) NFPA 804, 2006, paragraph 10.8.2.1(2) (b) NEIL LCM, March 2008, A3.2.20.5.2.1.1.
		External to Turbine Building	Horizontal passageway between Turbine Building and Control Building	Exterior Turbine Bldg. Wall: 3-hour fire resistive Doors: 3-hour fire rated	NEIL LCM, March 2008, 3.2.9.1 NFPA 804, paragraph 8.1.2.3 Also, based on (IBC) H-4 Occupancy and Type 1A construction Exterior Turbine Bldg. Wall: IBC, 2006, Table 601			
FT1502	Stairwell No. 1 (Room 114)	FT25X3	Switchgear Room 'A' (Room 210)	Walls: 2-hour fire resistive Door: 3-hour fire rated	Walls: NFPA 101, paragraph 8.5.6.(1) Doors: NFPA 101, Table 8.3.4.2	Wet pipe sprinkler	0.15 gpm/ft^2 (6.1 L/min-m^2) over 1500 ft^2 (139 m^2) Total flow (Est.): 850 gpm (3218 L/min)	Ordinary Hazard Group 1 per NFPA 13, paragraph 5.3.1
		External to Turbine Building	Horizontal passageway between Turbine Building and Control Building	Exterior Turbine Bldg. Wall: 3-hour fire resistive	NEIL LCM, March 2008, 3.2.9.1 NFPA 804, paragraph 8.1.2.3 Also, based on (IBC) H-4 Occupancy and Type 1A construction Exterior Turbine Bldg. Wall: IBC, 2006, Table 601			

Table 9A.4.3.3 - Summary of Fire Protection Criteria Floor 1F (Continued)

Fire Area	Description	Adjacent Fire Area	Adjacent Fire Area Description	Fire Rated Separation	Fire Separation Criteria	Automatic Suppression Type	Density	Suppression Criteria
FT1503	Stairwell No. 2 (Room 122)	FT1500	General Area	Walls: 3-hour fire resistive Doors: 3 - hour fire rated	NEIL LCM, March 2008, 3.2.9.1 NFPA 804, paragraph 8.1.2.3 Also, based on (IBC) H-4 Occupancy and Type 1A construction Exterior Turbine Bldg. Wall: IBC, 2006, Table 601 Turbine Bldg. Floor over Radwaste Building (treated as separation between buildings): IBC, 2006, Table 601 Walls: NFPA 101, paragraph 8.5.6.(1) Doors :NFPA 101, Table 8.3.4.2	Wet pipe sprinkler	0.15 gpm/ft^2 (6.1 L/min-m^2) over 1500 ft^2 (139 m^2) Total flow (Est.): 850 gpm (3218 L/min)	Ordinary Hazard Group 1 per NFPA 13, paragraph 5.3.1

Table 9A.4.3.3 - Summary of Fire Protection Criteria
Floor 1F (Continued)

Fire Area	Description	Adjacent Fire Area	Adjacent Fire Area Description	Fire Rated Separation	Fire Separation Criteria	Automatic Suppression Type	Density	Suppression Criteria
FT2502	Stairwell No. 3 (Room 212)	FT1500	General Area	Walls: 2-hour fire resistive Doors: 3-hour fire rated	Walls: NFPA 101, paragraph 8.5.6.(1) Doors: NFPA 101, Table 8.3.4.2	Wet pipe sprinkler	0.15 gpm/ft^2 (6.1 L/min-m^2) over 1500 ft^2 (139 m^2) Total flow (Est.): 850 gpm (3218 L/min)	Ordinary Hazard Group 1 per NFPA 13, paragraph 5.3.1
		FT15Y2	Elevator Shaft (Room 250)	Walls: 2-hour fire resistive	NFPA 804, paragraphs 8.1.2.4 and 8.1.2.5			
		FT25X3	Switchgear Room 'A' (Room 210)	Wall: 2-hour fire resistive	Specified by FPE at this location. NEIL LCM, March 2008, 3.2.9.5 NFPA 13, paragraph 8.15.10			
FT2504	Stairwell No. 4 (Room 249)	FT1500	General Area	Walls: 2-hour fire resistive Doors: 3-hour fire rated	Walls: NFPA 101, paragraph 8.5.6.(1) Doors: NFPA 101, Table 8.3.4.2	Wet pipe sprinkler	0.15 gpm/ft^2 (6.1 L/min-m^2) over 1500 ft^2 (139 m^2) Total flow (Est.): 850 gpm (3218 L/min)	Ordinary Hazard Group 1 per NFPA 13, paragraph 5.3.1
		FT15Y1	Stairwell No. 8	Walls: 3-hour fire resistive	Walls: NFPA 101, paragraph 8.5.6.(1)			
FT15X1	Stairwell No. 6 (Room 1X3)	FT1500	General Area	Walls: 2-hour fire resistive Doors: 3-hour fire rated	Walls: NFPA 101, paragraph 8.5.6.(1) Doors: NFPA 101, Table 8.3.4.2	Wet pipe sprinkler	0.15 gpm/ft^2 (6.1 L/min-m^2) over 1500 ft^2 (139 m^2) Total flow (Est.): 850 gpm (3218 L/min)	Ordinary Hazard Group 1 per NFPA 13, paragraph 5.3.1

Table 9A.4.3.3 - Summary of Fire Protection Criteria Floor 1F (Continued)

Fire Area	Description	Adjacent Fire Area	Adjacent Fire Area Description	Fire Rated Separation	Fire Separation Criteria	Automatic Suppression Type	Density	Suppression Criteria
FT15X2	Stairwell No. 7 (Room 1X4)	FT1500	General Area	Walls: 2-hour fire resistive Doors: 3-hour fire rated	Walls: NFPA 101, paragraph 8.5.6.(1) Doors: NFPA 101, Table 8.3.4.2	Wet pipe sprinkler	0.15 gpm/ft^2 (6.1 L/min-m^2) over 1500 ft^2 (139 m^2) Total flow (Est.): 850 gpm (3218 L/min)	Ordinary Hazard Group 1 per NFPA 13, paragraph 5.3.1
		External to Turbine Building	Horizontal passageway between Turbine Building and Control Building	Exterior Turbine Bldg. Wall: 3-hour fire resistive	NEIL LCM, March 2008, 3.2.9.1 NFPA 804, paragraph 8.1.2.3 Also, based on (IBC) H-4 Occupancy and Type 1A construction Exterior Turbine Bldg. Wall: IBC, 2006, Table 601			
FT15Y1	Stairwell No. 8 (Room 1X4)	FT2504	Stairwell No. 4 (Room 249)	Walls: 3-hour fire resistive	Walls: NFPA 101, paragraph 8.5.6.(1)	Wet pipe sprinkler	0.15 gpm/ft^2 (6.1 L/min-m^2) over 1500 ft^2 (139 m^2) Total flow (Est.): 850 gpm (3218 L/min)	Ordinary Hazard Group 1 per NFPA 13, paragraph 5.3.1
		FT2503	House Boiler Area (Room 247)	Walls: 3-hour fire resistive	Walls: NFPA 101, paragraph 8.5.6.(1)			

Table 9A.4.3.3 - Summary of Fire Protection Criteria Floor 1F (Continued)

Fire Area	Description	Adjacent Fire Area	Adjacent Fire Area Description	Fire Rated Separation	Fire Separation Criteria	Automatic Suppression Type	Density	Suppression Criteria
FT15Y2	Elevator Shaft (Room 250)	FT1500	General Area	Walls: 2-hour fire resistive Doors: 1 ½ -hour fire rated	NFPA 804, paragraphs 8.1.2.4 and 8.1.2.5	Wet pipe sprinkler	0.20 gpm/ft^2 (8.2 L/min-m^2) over 1500 ft^2 (139 m^2) Total flow (Est.): 950 gpm (3596 L/min)	Ordinary Hazard Group 2 per NFPA 13, paragraph 5.3.2
		FT25X3	Switchgear Room 'A' (Room 210)	Walls: 2-hour fire resistive	Specified by FPE at this location. NEIL LCM, March 2008, 3.2.9.5 NFPA 13, paragraph 8.15.10			
		FT2502	Stairwell No. 3 (Room 212)	Wall: 2-hour fire resistive	Walls: NFPA 101, paragraph 8.5.6.(1) Doors: NFPA 101, Table 8.3.4.2			
FT2503	House Boiler Area (Room 247)	FT1500	General Area	Walls: 3-hour fire resistive	NEIL LCM, March 2008, 3.2.9.6 NOTE: 3-hour wall is specified based on fuel fired boiler. Specified rating may be reduced in the future due to planned electric boiler.	Wet pipe sprinkler	0.25 gpm/ft^2 (10.2 L/min-m^2) over 5440 ft^2 (505 m^2) – entire area Total flow (Est.): 2540 gpm (9615 L/min)	NEIL LCM, paragraph 3.2.20.5 NFPA 804, paragraph 10.24.3

Table 9A.4.3.3 - Summary of Fire Protection Criteria Floor 1F (Continued)

Fire Area	Description	Adjacent Fire Area	Adjacent Fire Area Description	Fire Rated Separation	Fire Separation Criteria	Automatic Suppression Type	Density	Suppression Criteria
FT2503	House Boiler Area (Room 247)	FT15Y1	Stairwell No. 8 (Room 1X4)	Walls: 3-hour fire resistive	NEIL LCM, March 2008, 3.2.9.6 NOTE: 3-hour wall is specified based on fuel fired boiler. Specified rating may be reduced in the future due to planned electric boiler. Walls:NFPA 101, paragraph 8.5.6.(1)	Wet pipe sprinkler	0.25 gpm/ft^2 (10.2 L/min-m^2) over 5440 ft^2 (505 m^2) – entire area Total flow (Est.): 2540 gpm (9615 L/min)	NEIL LCM, paragraph 3.2.20.5 NFPA 804, paragraph 10.24.3
		FT3500	Combustion Turbine Generator Area (Rooms 317 and 2X8)	Walls: 3-hour fire resistive	NEIL LCM, March 2008, 3.2.9.6 NOTE: 3-hour wall is specified based on fuel fired boiler. Specified rating may be reduced in the future due to planned electric boiler.			
		FT35X8	Switchgear Room ‘B’ (Room 310)	Ceiling: 3-hour fire resistive	NEIL LCM, March 2008, 3.2.9.6 NOTE: 3-hour wall is specified based on fuel fired boiler. Specified rating may be reduced in the future due to planned electric boiler.			

Table 9A.4.3.3 - Summary of Fire Protection Criteria Floor 1F (Continued)

Fire Area	Description	Adjacent Fire Area	Adjacent Fire Area Description	Fire Rated Separation	Fire Separation Criteria	Automatic Suppression Type	Density	Suppression Criteria
FT3500	Combustion Turbine Generator Area (Rooms 317 and 2X8)	FT1501	HNCW Chiller Area (Room 248), Instrument, Service, and Breathing Air System Equipment Areas (Rooms 111 and 1Y2)	Floor: 3-hour fire resistive	NFPA 804, paragraph 8.1.2.3	Wet Pipe Sprinkler	0.25 gpm/ft^2 (10.2 L/min-m^2) over 2500 ft^2 (230 m^2) Total flow (Est.): 1440 gpm (5451 L/min)	NFPA 37, paragraph 11.4.5.1 NOTE:Realistic criteria taken from NFPA 37. Flow and density taken from NFPA 804, paragraph 10.9.3, is very demanding (over entire area) and is not realistic for the size of STP 3 & 4 CTG Area.
		FT35X8	Switchgear Room 'B' (Room 310)	Ceiling: 3-hour fire resistive	NFPA 804, paragraph 8.1.2.3			
		FT1500	General Area	Wall: 3-hour fire resistive	NFPA 804, paragraph 8.1.2.3			
		FT2503	House Boiler Area (Room 247)	Wall: 3-hour fire resistive	NFPA 804, paragraph 8.1.2.3			
		FT25X1	Combustion Turbine Generator Switchgear (Room 2X5)	Wall: 3-hour fire resistive	NFPA 804, paragraph 8.1.2.3			
		FT25X3	Switchgear Room 'A' (Room 210)	Wall: 3-hour fire resistive Door: 3-hour fire rated	NFPA 804, paragraph 8.1.2.3			
FT25X1	Combustion Turbine Generator Switchgear (Room 2X5)	FT1500	General Area	Wall: 2-hour fire resistive	Specified by FPE at this location. NEIL LCM, March 2008, 3.2.9.5 NFPA 13, paragraph 8.15.10	Wet pipe sprinkler	0.20 gpm/ft^2 (8.2 L/min-m^2) over 1500 ft^2 (139 m^2) Total flow (Est.): 950 gpm (3596 L/min)	Ordinary Hazard Group 2 per NFPA 13, paragraph 5.3.2
		FT1501	HNCW Chiller Area (Room 248), Instrument, Service, and Breathing Air System Equipment Areas (Rooms 111 and 1Y2)	Floor: Minimum 1-hour fire resistive	NEIL LCM, March 2008, 3.2.9.5 NFPA 13, paragraph 8.15.10			

Table 9A.4.3.3 - Summary of Fire Protection Criteria
Floor 1F (Continued)

Fire Area	Description	Adjacent Fire Area	Adjacent Fire Area Description	Fire Rated Separation	Fire Separation Criteria	Automatic Suppression Type	Density	Suppression Criteria
FT25X1	Combustion Turbine Generator Switchgear (Room 2X5)	FT35X8	Switchgear Room 'B' (Room 310)	Ceiling: Minimum 1-hour fire resistive	NEIL LCM, March 2008, 3.2.9.5 NFPA 13, paragraph 8.15.10	Wet pipe sprinkler	0.20 gpm/ft^2 (8.2 L/min-m^2) over 1500 ft^2 (139 m^2) Total flow (Est.): 950 gpm (3596 L/min)	Ordinary Hazard Group 2 per NFPA 13, paragraph 5.3.2
		FT3500	Combustion Turbine Generator Area (Rooms 317 and 2X8)	Wall: 3-hour fire resistive	NFPA 804, paragraph 8.1.2.3			
		FT25X3	Switchgear Room 'A' (Room 210)	Wall: Minimum 1-hour fire resistive Door: Minimum 1-hour fire rated	NEIL LCM, March 2008, 3.2.9.5 NFPA 13, paragraph 8.15.10			

Table 9A.4.3.3 - Summary of Fire Protection Criteria Floor 1F (Continued)

Fire Area	Description	Adjacent Fire Area	Adjacent Fire Area Description	Fire Rated Separation	Fire Separation Criteria	Automatic Suppression Type	Density	Suppression Criteria
FT25X3	Switchgear Room 'A' (Room 210)	FT1500	General Area	Wall: 2-hour fire resistive	Specified by FPE at this location. NEIL LCM, March 2008, 3.2.9.5 NFPA 13, paragraph 8.15.10	Wet pipe sprinkler	0.20 gpm/ft^2 (8.2 L/min-m^2) over 1500 ft^2 (139 m^2) Total flow (Est.): 950 gpm (3596 L/min)	Ordinary Hazard Group 2 per NFPA 13, paragraph 5.3.2
		FT1501	HNCW Chiller Area (Room 248), Instrument, Service, and Breathing Air System Equipment Areas (Rooms 111 and 1Y2)	Floor: Minimum 1-hour fire resistive	NEIL LCM, March 2008, 3.2.9.5 NFPA 13, paragraph 8.15.10			
		FT35X8	Switchgear Room 'B' (Room 310)	Ceiling: Minimum 1-hour fire resistive	NEIL LCM, March 2008, 3.2.9.5 NFPA 13, paragraph 8.15.10			
		FT3500	Combustion Turbine Generator Area (Rooms 317 and 2X8)	Wall: 3-hour fire resistive	NFPA 804, paragraph 8.1.2.3			
		FT25X1	Combustion Turbine Generator Switchgear (Room 2X5)	Wall: Minimum 1-hour fire resistive Door: Minimum 1-hour fire rated	NEIL LCM, March 2008, 3.2.9.5 NFPA 13, paragraph 8.15.10			

Table 9A.4.3.3 - Summary of Fire Protection Criteria Floor 1F (Continued)

Fire Area	Description	Adjacent Fire Area	Adjacent Fire Area Description	Fire Rated Separation	Fire Separation Criteria	Automatic Suppression Type	Density	Suppression Criteria
FT25X3	Switchgear Room 'A' (Room 210)	FT2502	Stairwell No. 3 (Room 212)	Walls: 2-hour fire resistive	Walls: NFPA 101, paragraph 8.5.6.(1) Doors: NFPA 101, Table 8.3.4.2	Wet pipe sprinkler	0.20 gpm/ft^2 (8.2 L/min-m^2) over 1500 ft^2 (139 m^2) Total flow (Est.): 950 gpm (3596 L/min)	Ordinary Hazard Group 2 per NFPA 13, paragraph 5.3.2
		FT1502	Stairwell No. 1 (Room 114)	Walls: 2-hour fire resistive Door: 3-hour fire rated	Walls: NFPA 101, paragraph 8.5.6.(1) Doors :NFPA 101, Table 8.3.4.2			
		FT15Y2	Elevator Shaft (Room 250)	Walls: 2-hour fire resistive	NFPA 804, paragraphs 8.1.2.4 and 8.1.2.5			
		External to Turbine Building	Horizontal passageway between Turbine Building and Control Building	Exterior Turbine Bldg. Wall: 3-hour fire resistive	NEIL LCM, March 2008, 3.2.9.1 NFPA 804, paragraph 8.1.2.3 Also, based on (IBC) H-4 Occupancy and Type 1A construction Exterior Turbine Bldg. Wall: IBC, 2006, Table 601			

9A.4.3.4 Floor 2F (El. 19.7m (59'-3 ½")) – See Figure 9A.4-20 and Table 9A.4.3.4 Summary of Fire Protection Criteria Floor 2F

9A.4.3.4.1 Fire Area – FT1500 (General Area)

(1) Fire Area Boundary Description

Floor 2F shares fire area FT1500 with all other floors in the Turbine Building.

A non fire-rated equipment access hatch is installed in the floor above the offgas charcoal adsorber room (room 112). Room 112 is part of fire area FT1500.

Additionally, a large non fire-rated equipment hatch exists in the floor on the northwest side of the building leading vertically down to the unloading bay on floor 1F below. Above, in the ceiling, a large grated opening and non-fire rated equipment hatch directly connect floors 2F and 3F.

Non-fire rated equipment access hatches exist in the floor of the condensate filter maintenance area (room 342) over the condensate filter vessel area (room 241) on floor 1F below.

The low pressure condensate pump area (room 140) extends vertically up from floor B1F, through floors MB1F, 1F and 2F, to and through an unprotected equipment hatch in the turbine operating deck floor (floor 3F, elevation 27.8m (85'-10 ½")). The low pressure condensate pump area is part of fire area FT1500.

The steam jet air ejector area (room 311) and gland seal steam condenser area (room 314) extend vertically up from floor 1F, through floor 2F, to and through a non fire-rated equipment hatch in the operating deck floor (floor 3F, elevation 27.8m (85'-10 ½")). Rooms 311 and 314 are part of fire area FT1500.

Fire area FT1500 is bounded by:

- The Turbine Building exterior walls
- The exterior walls separating stairwell no. 2 (room 122, fire area FT1503)
- The interior walls enclosing stairwell no. 3 (room 212, fire area FT2502)
- The interior walls enclosing stairwell no. 4 (room 249, fire area FT2504)
- The interior walls enclosing the elevator shaft (room 250, fire area FT15Y2)

- The interior walls enclosing the area housing the main turbine lube oil tank (room 330, fire area FT3501)
- The interior walls enclosing the area housing the safety related low pressure condensate pump switchgear (room 31X-2, fire area FT35X1)
- The interior walls enclosing the area housing the generator oil seal unit (room 3X2, fire area FT35X9)
- The interior wall between switchgear area 'B' (room 310, fire area FT35X8) and this fire area, along building column line T8.
- The interior wall between 125Vdc and 250Vdc battery rooms (rooms 3X4, 3X5, 3X6, 3X7 and 3X8, fire areas FT35X3, FT35X2, FT35X4, FT35X5, and FT35X6, respectively) and this fire area, along column line T8
- The interior and exterior walls enclosing the steam tunnel area (room 219, fire area FT2505)

(2) Equipment – See Table 9A.6-4

Safety Related	Provides Core Cooling
No	No

(3) Radioactive Material Present – None that can be released as a result of fire.

(4) Qualification of Fire Barriers –

The Turbine Building is classified as Type IA construction in accordance with the International Building Code (IBC), 2006. Type IA construction is non-combustible. The building structural frame, and all exterior and interior bearing walls, are required to be of 3 hour fire-resistive construction. The building floor is required to be of not less than 2 hour fire resistive construction, including supporting beams and joists. Also, the building roof is required to be of not less than 1 ½ hour fire resistive construction.

The enclosed stairwells that serve fire area FT1500 on floor 2F, stairwell nos. 2, 3, and 4 are of 2 hour fire-resistive concrete construction. These stairwells are separate fire areas and are discussed in subsections 9A.4.3.1.2, 9A.4.3.2.3 and 9A.4.3.1.3 (fire areas FT1503, FT2502 and FT2504).

The elevator shaft (room 250) is of 2 hour fire-resistive concrete construction, is a separate fire area (FT15Y2) and is described in subsection 9A.4.3.2.5.

The walls of the area housing the main turbine lube oil tank (room 330, fire area FT3501), generator hydrogen seal oil unit (room 3X2, fire area FT35X9) and safety related low pressure condensate pump switchgear (room 31X-2, fire area FT35X1) are separated from fire area FT1500 by 3 hour fire-resistive concrete construction with 3 hour fire rated doors. These rooms are

described as separate fire areas in subsections 9A.4.3.4.2 through 9A.4.3.4.4, respectively.

Fire area FT1500 is separated from the area housing switchgear room 'B' (room 210, fire area FT35X8) by 2 hour fire-resistive concrete construction along column line T8. Fire area FT35X8 is described in subsection 9A.4.3.4.5.

The 125Vdc and 250Vdc battery rooms (rooms 3X4, 3X5, 3X6, 3X7 and 3X8, fire areas FT35X3, FT35X2, FT35X4, FT35X5, and FT35X6, respectively) are separated from fire area FT1500 by 2 hour fire-resistive concrete construction along column line T8. The fire-resistive construction of these battery rooms is described in subsection 9A.4.3.4.7.

The steam tunnel area (room 219, fire area FT2505) is separated from the turbine building by 3 hour fire-resistive concrete construction. The steam tunnel is described in subsection 9A.4.3.4.8.

(5) Combustibles Present:

Fire Loading	Total Heat of Combustion (MJ)
(a) Cable in conduit and dispersed in cable trays	Acceptable
(b) Limited quantities of lubricants in pumps	Negligible

(6) Detection Provided – Class A supervised POC, and manual alarm pull stations.

Manual Pull Locations: TA.4-T7.5, TH.5-T7.9, TG.6-T2

(7) Suppression Available:

Type	Location/Actuation
Modified Class III standpipes	Stairwells No.2 <122>, No.3 <212>, and No.4 <249>
ABC portable (hand) extinguishers and hose stations	TB.1-T2, TB.3-T3.1, TB-T4.6, TC.9-T5.4, TA.9-T5.9, TA.6-T7.8, TC.4-T7.8, TE.2-T7.8, TG-T7.8, TH.5-T7.8, TD.3-T6.1, TE.7-T5.9, TD.4-T1.1, TF.1-T2, TG.4-T2.3, TJ.1-T2.1, TJ.1-T4, TH.9-T6, TG.1-T6
Wet pipe sprinkler system Design density 12.2 L/min-m^2 (0.3 gpm/ft^2) over 464.5 m^2 (5000 ft^2)	Throughout floor 2F

(8) Fire Protection Design Criteria Employed:

(a) Fire detection and suppression capability is provided and accessible;

(b) Fire stops are provided for penetrations through rated fire barriers.

(9) Consequences of Fire – Postulated fire assumes loss of function. Smoke from a fire would be removed by the normal HVAC.

(10) Consequences of Fire Suppression – Suppression extinguishes the fire. Refer to Section 3.4, “Water Level (Flood) Design,” for drain system.

(11) Design Criteria Used for Protection Against Inadvertent Operation, Careless Operation or Rupture of the Suppression System:

(a) Provision of raised supports for the equipment

(b) Refer to Section 3.4, “Water Level (Flood) Design,” for drain system.

(12) Fire Containment or Inhibiting Methods Employed:

(a) Fire stops are provided for penetrations through fire rated barriers.

(b) The means of fire detection, suppression and alarming are provided and accessible.

(13) Remarks:

(a) The following safety-related equipment representing all four safety divisions is mounted on this floor:

C71-PoS001 A-D

C71-PoS004 A-D

B21-PS028 A-D

(b) Section 9A.5, Special Cases, provides justification for locating equipment from multiple safety divisions on this floor of the turbine building.

(c) The safety related low pressure condensate pump switchgear is located on this floor.

(d) Electrical cable insulation in conduit does not represent a combustible fire load.

9A.4.3.4.2 Fire Area – FT3501 (Main Turbine Lube Oil Tank – Room 330)

(1) Fire Area Boundary Description

The interior walls, ceiling and floor of fire area FT3501, containing the main turbine lube oil tank consists of fire-resistive concrete construction.

(2) Equipment – See Table 9A.6-4

Safety Related	Provides Core Cooling
No	No

(3) Radioactive Material Present – None.

(4) Qualification of Fire Barriers – The walls, ceiling and floor enclosing the lube oil purification unit (room 230) are of 3 hour fire-resistive-concrete construction with 3 hour fire rated doors.

(5) Combustibles Present:

Fire Loading	Total Heat of Combustion (MJ)
Turbine lube oil tank, Capacity 69,966 L (18,483 gal.) (Est.)	2,925,858 MJ (2,773,178,180 Btu)

(6) Detection Provided – Class A supervised rate compensated thermal detectors. The detection system is a cross zoned system requiring two detectors, one in each zone to sense fire before initiating the suppression system. A manual alarm pull station is located at the door.

(7) Suppression Available:

Type	Location/Actuation
Modified Class III standpipe	Stairwells No.3 <212>
ABC portable (hand) extinguishers and hose stations	TG.8-T6.7, TJ.1-T7
Deluge foam water spray system Foam water density: 20.4 L/min-m^2 (0.5 gpm/ft^2) (Est.)	Room 330

(8) Fire Protection Design Criteria Employed:

(a) Room 330 is configured as a separate fire-resistive enclosure.

(b) Alternate access and egress routes are provided by separate enclosed stairways at this floor level.

(c) Fire detection and suppression capability is provided and accessible.

(9) Consequences of Fire – The postulated fire assumes loss of function of the enclosed area and affected equipment. Smoke from a fire would be removed by the normal HVAC system.

(10) Consequences of Fire Suppression – Suppression extinguishes the fire. Refer to Section 3.4, “Water Level (Flood) Design,” for drain system.

(11) Design Criteria Used for Protection Against Inadvertent Operation, Careless Operation or Rupture of the Suppression System:

(a) Location of the manual suppression system external to the room

(b) Provision of raised supports for equipment

(c) Refer to Section 3.4, “Water Level (Flood) Design,” for drain system.

(d) Cross zoned detectors for initiation of deluge system

(12) Fire Containment or Inhibiting Methods Employed:

(a) The function is provided in a fire-resistive enclosure.

(b) Fire stops are provided for penetrations through fire rated barriers.

(c) The means of fire detection, suppression and alarming are provided and accessible.

(13) Remarks –The main turbine lube oil tank contains approximately 69,966 L (18,483 gallons), therefore the deluge foam water sprinkler system must be capable of suppressing any fire in this room. The total flow of the deluge foam spray system with a 1893 L/min (500 gpm) hose stream allowance is estimated to be 4,618 L/min (1,220 gpm).

9A.4.3.4.3 Fire Area –FT35X9 (Generator Hydrogen Seal Oil Unit – Room 3X2)

(1) Fire Area Boundary Description

The interior walls, ceiling and floor of fire area FT35X9, containing the generator hydrogen seal oil unit consists of fire-resistive concrete construction.

(2) Equipment – See Table 9A.6-4

Safety Related	Provides Core Cooling
No	No

(3) Radioactive Material Present – None.

(4) Qualification of Fire Barriers – The walls, ceiling and floor enclosing the generator hydrogen seal oil unit (room 3X2) are of 3 hour fire-resistive-concrete construction with 3 hour fire rated doors.

(5) Combustibles Present:

Fire Loading	Total Heat of Combustion (MJ)
Generator hydrogen seal oil tank, Capacity 5,148 L (1,360 gal.) (Est.)	215,288 MJ (204,053,643 Btu)

(6) Detection Provided – Class A supervised rate compensated thermal detectors. The detection system is a cross zoned system requiring two detectors, one in each zone to sense fire before initiating the suppression system. A manual alarm pull station is located at the door.

(7) Suppression Available:

Type	Location/Actuation
Modified Class III standpipe	Stairwells No.4 <249>
ABC portable (hand) extinguishers and hose stations	TB.3-T3.1, TB.1-T2
Deluge foam water spray system Foam water density: 20.4 L/min-m^2 (0.5 gpm/ft^2) (Est.)	Room 3X2

(8) Fire Protection Design Criteria Employed:

(a) Room 3X2 is configured as a separate fire-resistive enclosure.

(b) Alternate access and egress routes are provided by separate enclosed stairways at this floor level.

(c) Fire detection and suppression capability is provided and accessible.

(9) Consequences of Fire – The postulated fire assumes loss of function of the enclosed area and affected equipment. Smoke from a fire would be removed by the normal HVAC system.

(10) Consequences of Fire Suppression – Suppression extinguishes the fire. Refer to Section 3.4, “Water Level (Flood) Design,” for drain system.

(11) Design Criteria Used for Protection Against Inadvertent Operation, Careless Operation or Rupture of the Suppression System:

(a) Location of the manual suppression system external to the room

(b) Provision of raised supports for equipment

(c) Refer to Section 3.4, “Water Level (Flood) Design,” for drain system.

(d) Cross zoned detectors for initiation of deluge system

(12) Fire Containment or Inhibiting Methods Employed:

(a) The function is provided in a fire-resistive enclosure.

(b) Fire stops are provided for penetrations through fire rated barriers.

(c) The means of fire detection, suppression and alarming are provided and accessible.

(13) Remarks – The generator hydrogen seal oil unit contains approximately 5,148 L (1,360 gallons), therefore the deluge foam water spray system must be capable of suppressing any fire in this room. The total flow of the deluge foam spray system with a 1893 L/min (500 gpm) hose stream allowance is estimated to be 3,426 L/min (905 gpm).

9A.4.3.4.4 Fire Area –FT35X1 (Safety Related Low Pressure Condensate Pump Switchgear (Room 31X-2)

Fire area FT1500 is separated from the area housing switchgear room ‘B’ (room 210, fire area FT35X8) by 2 hour fire-resistive concrete construction along column line T8. Fire area FT35X8 is described in subsection 9A.4.3.4.5.

(1) Fire Area Boundary Description

The safety-related low pressure condensate pump switchgear room (room 31X-2, fire area FT35X1) is separated from fire area FT1500 by a concrete fire-resistive wall, floor and ceiling construction.

(2) Equipment – See Remarks

Safety Related	Provides Core Cooling
Yes	No

(3) Radioactive Material Present – None.

(4) Qualification of Fire Barriers – The safety-related low pressure condensate switchgear room is enclosed in 3 hour fire-resistant concrete construction including 3 hour fire rated doors.

(5) Combustibles Present:

Fire Loading	Total Heat of Combustion (MJ)
Cable in conduit	Acceptable
Cable trays	1454 MJ/m^2 (0.1425 Btu/ft^2) ECLL (maximum average) applies

(6) Detection Provided – Class A supervised POC at each building floor elevation and manual pull station external to the enclosed stairway at each floor elevation.

(7) Suppression Available:

Type	Location/Actuation
Modified Class III standpipes	Stairwells No. 1 <114>, No.3 <212>
ABC portable (hand) extinguishers and hose station	TE.9-T6.6
Wet Pipe Sprinkler Design density: 8.2 L/min-m^2 (0.20 gpm/ft^2) over 1500 ft^2	Room 3X-2

(8) Fire Protection Design Criteria Employed:

(a) Fire detection and suppression capability is provided and accessible.

(b) Fire stops are provided for penetrations through fire rated barriers.

(9) Consequences of Fire – The postulated fire assumes loss of function. Smoke from a fire would be removed by the normal HVAC system.

(10) Consequences of Fire Suppression – Suppression extinguishes the fire. Refer to Section 3.4, “Water Level (Flood) Design,” for drain system.

(11) Design Criteria Used for Protection Against Inadvertent Operation, Careless Operation or Rupture of the Suppression System:

(a) Provision of raised supports for equipment.

(b) Refer to Section 3.4, “Water Level (Flood) Design,” for drain system.

(12) Fire Containment or Inhibiting Methods Employed:

(a) Fire stops are provided for penetrations through fire rated barriers.

(b) The means of fire detection, suppression and alarming are provided and accessible.

(13) Remarks:

(a) Electrical cable insulation in conduit does not represent a combustible fire load.

(b) The low pressure condensate pumps are required to automatically trip when a feedwater line break inside the drywell is detected. This is a safety related trip function but is not included in any post-fire safe shutdown success path (i.e., it is not required to safely shutdown to reactor to a hot or cold shutdown condition, or to maintain the reactor in a safe shutdown condition).

This trip function is accomplished by the Safety System Logic and Control (SSLC) which controls the application of divisional 125Vdc control power routed through the Turbine Building to two independent trip coils, respectively, within each safety related breaker.

All four safety related low pressure condensate pump breakers are located in the same fire area (room 3X2, fire area FT35X1). These safety related breakers are protected from a fire inside of the Turbine Building. The 125Vdc divisional control power enters this area from the common fire area (FT1500) to provide for the required trip function.

The SSLC circuits and 125Vdc control power are separated by electrical isolation devices. Therefore, a fire in the Turbine Building, including a fire inside the low pressure condensate pump switchgear room will not affect the SSLC system.

(c) The total flow of the wet pipe sprinkler system with a 1893 L/min (500 gpm) hose stream allowance is estimated to be 2,983 L/min (788 gpm).

9A.4.3.4.5 Fire Area –FT35X8 (Switchgear Room ‘B’ - Room 310)

(1) Fire Area Boundary Description

Switchgear room ‘B’ is bounded by a concrete fire-resistive wall, floor and ceiling construction.

Adjacent fire areas include:

- The combustion turbine generator area (room 317, fire area FT3500)
- An electrical equipment area (room 3X9, fire area FT35X7)
- The controlled access areas on floor 2F in the Turbine Building (fire area FT1500)
- Enclosed stairwell no. 1 (room 114, fire area FT1502)
- Enclosed stairwell no. 3 (room no. 212, fire area FT2502)

- Enclosed stairwell no. 8 (room no. 1Y5, fire area FT15Y1)
- The elevator shaft (room no. 250, fire area FT15Y2)
- 125Vdc and 250Vdc battery rooms (room nos. 3X4, 3X5, 3X6, 3X7, and 3X8, and respective fire areas FT35X3, FT35X2, FT35X4, FT35X5, and FT35X6)

The switchgear room 'B' floor is fire-resistive and separate this area from switchgear room 'A' (room 210, fire area FT25X3), house boiler area (room 247, fire area FT2503) and the combustion turbine generator switchgear area (room 2X5, fire area FT2X1) on floor 1F below.

The ceiling is of fire-resistive construction, separating switchgear room 'B' from roof areas, the reactor building exhaust fan area (room 412, fire area FT1500), the turbine building equipment exhaust fan area (room 4X3), and lube oil exhaust fan area on floor 3F above.

A non fire-rated equipment hatch is installed in the floor of room 310 providing equipment access to switchgear area 'A' below.

(2) Equipment – See Table 9A.6-4

Safety Related	Provides Core Cooling
No	No

(3) Radioactive Material Present – None.

(4) Qualification of Fire Barriers – Switchgear room 'B' (room 210) is separated from the combustion turbine generator area (room 317) by 3 hour fire-resistive concrete construction. This fire resistive separation is described in subsection 9A.4.3.3.2.

Room 310 is separated from stairwell no. 1 (room 114, fire area FT1502), stairwell no. 3 (room 212, fire area FT2502), stairwell no. 8 (room 1Y5, fire area FT15Y1), and the elevator shaft (room 250, fire area FT15Y2), by 2 hour fire-resistive concrete construction. These fire-resistive separations are described in subsections 9A.4.3.2.2, 9A.4.3.2.3, 9A.4.3.2.4, and 9A.4.3.2.5, respectively.

Separation from the electrical equipment room (room 3X9, fire area FT35X7), 125Vdc, and 250Vdc battery rooms is a minimum of 1 hour fire-resistive construction with a minimum of a ¾ hour fire rated door (doors are 3-hour fire rated for consistency throughout the Turbine Building). Room 3X9 (fire area FT35X7) is described in subsection 9A.4.3.4.8. The 125Vdc and 250Vdc battery rooms (room nos. 3X4, 3X5, 3X6, 3X7, and 3X8, and respective fire areas FT35X3, FT35X2, FT35X4, FT35X5, and FT35X6) are described in subsection 9A.4.3.4.7.

The interior separation between switchgear room 'B' (room 310) and fire area FT1500 at column line T8 is of 2 hour fire-resistive concrete construction.

The ceiling above switchgear room 'B' is a minimum of 1-1/2 hour fire resistive construction when this ceiling is the underside of the roof deck, or a minimum 1 hour fire-resistive construction beneath the reactor building exhaust fan area (room 412), turbine building equipment exhaust fan area (room 4X3), and lube oil exhaust fan area (room 413) on floor 3F (elevation 27.8m) above. Rooms 412, 4X3 and 413 are part of fire area FT1500 on floor 3F.

The switchgear room 'B' floor is of 3 hour fire-resistive construction where located above the house boiler area (room 247, fire area FT2503) and combustion turbine generator area (room 2X8, fire area FT3500). The floor is a minimum 1 hour fire-resistive concrete construction where located over switchgear room 'A' (room 210, fire area FT25X3) and the combustion turbine generator switchgear area (room 2X5, fire area FT25X1).

(5) Combustibles Present:

Fire Loading	Total Heat of Combustion (MJ)
Cable in conduit	Acceptable
Cable trays	1454 MJ/m^2 (0.1425 Btu/ft^2) ECLL (maximum average) applies

(6) Detection Provided – Class A supervised POC at each building floor elevation and manual pull station external to the enclosed stairway at each floor elevation.

Manual Pull Locations: TJ.5-T10, TA.2-T8.2

(7) Suppression Available:

Type	Location/Actuation
Modified Class III standpipes	Stairwells No. 1 <114>, and No.8 <1Y5>
ABC portable (hand) extinguishers and hose stations	TA.3-T8.2, TC.1-T8.9, TD.2-T8.1, TE.4-T8.9, TG.1-T8.8, TH.9-T9
Wet Pipe Sprinkler Design density: 8.2 L/min-m^2 (0.20 gpm/ft^2) over 1500 ft^2	Room 310

(8) Fire Protection Design Criteria Employed:

(a) Fire detection and suppression capability is provided and accessible.

(b) Fire stops are provided for penetrations through fire rated barriers.

(9) Consequences of Fire – The postulated fire assumes loss of function. Smoke from a fire would be removed by the normal HVAC system.

(10) Consequences of Fire Suppression – Suppression extinguishes the fire. Refer to Section 3.4, “Water Level (Flood) Design,” for drain system.

(11) Design Criteria Used for Protection Against Inadvertent Operation, Careless Operation or Rupture of the Suppression System:

(a) Provision of raised supports for equipment.

(b) Refer to Section 3.4, “Water Level (Flood) Design,” for drain system.

(12) Fire Containment or Inhibiting Methods Employed:

(a) Fire stops are provided for penetrations through fire rated barriers.

(b) The means of fire detection, suppression and alarming are provided and accessible.

(13) Remarks:

(a) Electrical cable insulation in conduit does not represent a combustible fire load.

(b) The total flow of the wet pipe sprinkler system with a 1893 L/min (500 gpm) hose stream allowance is estimated to be 3,596 L/min (950 gpm).

9A.4.3.4.6 Fire Area –FT35X7 (Electrical Equipment Area - Room 3X9)

(1) Fire Area Boundary Description

The electrical equipment area (room 3X9, fire area FT35X7) is enclosed on one side by turbine building exterior walls and on 3 sides by fire-resistant separation walls separating this area from switchgear room ‘B’ (room 310, fire area FT35X8).

The electrical equipment area floor separates this room from the combustion turbine generator room (room 317, fire are FT3500) and switchgear room ‘A’ (room 210, fire area FT25X3) on floor 1F below.

The fire resistive properties of the electrical equipment area ceiling are consistent with the requirements of the IBC for Type IA fire-resistive structures where the ceiling is made up of the roof deck above.

(2) Equipment – See Table 9A.6-4

Safety Related	Provides Core Cooling
No	No

(3) Radioactive Material Present – None.

(4) Qualification of Fire Barriers – The Turbine Building is classified as Type IA construction in accordance with the International Building Code (IBC), 2006. Type IA construction is non-combustible. The building structural frame, and all exterior and interior bearing walls, are required to be of 3 hour fire-resistive construction. The building floor is required to be of not less than 2 hour fire resistive construction, including supporting beams and joists. Also, the building roof is required to be of not less than 1 ½ hour fire resistive construction.

The interior walls and floor that separate the electrical equipment room from adjacent switchgear room 'B'(room 310, fire area FT35X8) and switchgear room 'A' (room 210, fire area FT25X3) on floor 1F below are a minimum 1 hour fire-resistive construction.

(5) Combustibles Present:

Fire Loading	Total Heat of Combustion (MJ)
Cable in conduit.	Acceptable
Cable trays	1454 MJ/m^2 (0.1425 Btu/ft^2) ECLL (maximum average) applies

(6) Detection Provided – Class A supervised POC at each building floor elevation and manual pull station external to the enclosed stairway at each floor elevation.

Manual Pull Locations: TJ.5-T10, TA.2-T8.2

(7) Suppression Available:

Type	Location/Actuation
Modified Class III standpipes	Stairwells No. 1 <114>, and No.8 <1Y5>
ABC portable (hand) extinguishers and hose stations	TE.4-T8.9, TG.1-T8.8, TH.9-T9
Wet Pipe Sprinkler Design density: 8.2 L/min-m^2 (0.20 gpm/ft^2) over 1500 ft^2	Room 3X9

(8) Fire Protection Design Criteria Employed:

(a) Fire detection and suppression capability is provided and accessible.

(b) Fire stops are provided for penetrations through fire rated barriers.

(9) Consequences of Fire – The postulated fire assumes loss of function. Smoke from a fire would be removed by the normal HVAC system.

(10) Consequences of Fire Suppression – Suppression extinguishes the fire. Refer to Section 3.4, “Water Level (Flood) Design,” for drain system.

(11) Design Criteria Used for Protection Against Inadvertent Operation, Careless Operation or Rupture of the Suppression System:

(a) Provision of raised supports for equipment.

(b) Refer to Section 3.4, “Water Level (Flood) Design,” for drain system.

(12) Fire Containment or Inhibiting Methods Employed:

(a) Fire stops are provided for penetrations through fire rated barriers.

(b) The means of fire detection, suppression and alarming are provided and accessible.

(13) Remarks:

(a) Electrical cable insulation in conduit does not represent a combustible fire load.

(b) The total flow of the wet pipe sprinkler system with a 1893 L/min (500 gpm) hose stream allowance is estimated to be 3,596 L/min (950 gpm).

9A.4.3.4.7 Fire Areas – FT35X3, FT35X2, FT35X4, FT35X5, and FT35X6 (125Vdc and 250Vdc Battery Rooms – Room Nos. 3X4, 3X5, 3X6, 3X7, and 3X8)

(1) Fire Area Boundary Description

The walls, floor and ceiling of battery rooms (room nos. 3X4, 3X5, 3X6, 3X7, and 3X8, fire areas FT35X3, FT35X2, FT35X4, FT35X5, and FT35X6) provide a fire-resistive separation between these rooms and adjacent switchgear room ‘B’ (room 310, fire area FT35X8) and switchgear room ‘A’ (room 210, fire area FT25X3) on floor 1F below.

A fire-resistive separation is also required between the 125Vdc and 250Vdc battery rooms and the controlled turbine building areas. This fire separation is located along column line T8.

(2) Equipment – See Table 9A.6-4

Safety Related	Provides Core Cooling
No	No

(3) Radioactive Material Present – None.

(4) Qualification of Fire Barriers –

The interior walls, floor and ceiling of the 125Vdc and 250Vdc battery rooms (room nos. 3X4, 3X5, 3X6, 3X7, and 3X8, fire areas FT35X3, FT35X2, FT35X4, FT35X5, and FT35X6) are of minimum 1 hour fire-resistive construction.

The wall along column line T8 that separates these battery rooms from controlled turbine building areas is of 2 hour fire-resistive construction.

(5) Combustibles Present:

Fire Loading	Total Heat of Combustion (MJ)
Cable in conduit	Acceptable
Cable trays.	1454 MJ/m^2 (0.1425 Btu/ft^2) ECLL (maximum average) applies
HVAC will maintain hydrogen gas concentration less than 1% by volume	Acceptable

(6) Detection Provided – Class A supervised POC at each building floor elevation and manual pull station external to the enclosed stairway at each floor elevation.

Manual Pull Locations: TJ.5-T10, TA.2-T8.2

(7) Suppression Available:

Type	Location/Actuation
Modified Class III standpipes	Stairwells No. 1 <114>, and No.8 <1Y5>
ABC portable (hand) extinguishers and hose stations	TE.4-T8.9, TG.1-T8.8, TH.9-T9
Wet Pipe Sprinkler Design density: 8.2 L/min-m^2 (0.20 gpm/ft^2) over 1500 ft^2	Rooms 3X4, 3X5, 3X6, 3X7, and 3X8

(8) Fire Protection Design Criteria Employed:

(a) Fire detection and suppression capability is provided and accessible.

(b) Fire stops are provided for penetrations through fire rated barriers.

(9) Consequences of Fire – The postulated fire assumes loss of function. Smoke from a fire would be removed by the normal HVAC system.

(10) Consequences of Fire Suppression – Suppression extinguishes the fire. Refer to Section 3.4, “Water Level (Flood) Design,” for drain system.

(11) Design Criteria Used for Protection Against Inadvertent Operation, Careless Operation or Rupture of the Suppression System:

(a) Provision of raised supports for batteries..

(b) Refer to Section 3.4, “Water Level (Flood) Design,” for drain system.

(12) Fire Containment or Inhibiting Methods Employed:

(a) Functions provided by batteries are located in separate fire-resistive enclosures

(b) Fire stops are provided for penetrations through fire rated barriers.

(c) The means of fire detection, suppression and alarming are provided and accessible.

(13) Remarks:

(a) Electrical cable insulation in conduit does not represent a combustible fire load.

(b) The total flow of the wet pipe sprinkler system with a 1893 L/min (500 gpm) hose stream allowance is estimated to be 3,596 L/min (950 gpm).

9A.4.3.4.8 Fire Area –FT2505 (Steam Tunnel - Room 219)

(1) Fire Area Boundary Description

The steam tunnel (room 219, fire area FT2505) is separated from all other areas by fire-resistive construction. The steam tunnel extends vertically upward along the exterior turbine building wall to an elevation directly beneath the turbine building roof structure.

(2) Equipment – See Table 9A.6-4

Safety Related	Provides Core Cooling
Yes	No

(3) Radioactive Material Present – None that can be release as a result of a fire.

(4) Qualification of Fire Barriers – The steam tunnel walls, floor and ceiling are all of 3 hour fire-resistive concrete construction.

(5) Combustibles Present:

Fire Loading	Total Heat of Combustion (MJ)
Cable in conduit and dispersed in cable trays	Acceptable

(6) Detection Provided – Class A supervised rate compensated thermal detectors.

(7) Suppression Available:

Type	Location/Actuation
Modified Class III standpipe	Stairwells No.3 <212> (outside of FT2505)
ABC portable (hand) extinguishers and hose stations	TH.5-T7.8, TJ.1-T4, TH.9-T6 (floor 2F, outside of FT2505)
	TG.9-T6.8, TH.3-T8, TJ.1-T6, TG.6-T5.1, TJ.9-T4, TG.6-T2.9, TJ.1-T2 (floor 3F, outside of FT2505)

(8) Fire Protection Design Criteria Employed:

(a) Fire detection and suppression capability is provided and accessible.

(b) Fire stops are provided for penetrations through fire rated barriers.

(9) Consequences of Fire – The postulated fire assumes loss of function. Smoke from a fire would be removed by the normal HVAC system.

(10) Consequences of Fire Suppression – Suppression extinguishes the fire. Refer to Section 3.4, “Water Level (Flood) Design,” for drain system.

(11) Design Criteria Used for Protection Against Inadvertent Operation, Careless Operation or Rupture of the Suppression System:

(a) Location of manual suppression system external to room.

(b) No floor mounted equipment.

(c) Refer to Section 3.4, “Water Level (Flood) Design,” for drain system.

(12) Fire Containment or Inhibiting Methods Employed:

(a) Fire stops are provided for penetrations through fire rated barriers.

(b) The means of fire detection, suppression and alarming are provided and accessible.

(13) Remarks:

(a) The following safety-related equipment representing all four safety divisions are mounted in the steam tunnel:

(i) E31-TE021-029 A-D

(b) Section 9A.5. Special Cases, provides justification for locating equipment from multiple safety divisions on this floor of the turbine building.

(c) Electrical cable insulation in conduit does not represent a combustible fire load.

Table 9A.4.3.4 - Summary of Fire Protection Criteria
Floor 2F

Fire Area	Description	Adjacent Fire Area	Adjacent Fire Area Description	Fire Rated Separation	Fire Separation Criteria	Automatic Suppression Type	Density	Suppression Criteria
FT1500	General Area	FT1503	Stairwell No. 2 (Room 122)	Walls :3-hour fire resistive Doors: 3 - hour fire rated	NEIL LCM, March 2008, 3.2.9.1 NFPA 804, paragraph 8.1.2.3 Also, based on (IBC) H-4 Occupancy and Type 1A construction Exterior Turbine Bldg. Wall: IBC, 2006, Table 601 Turbine Bldg. Floor over Radwaste Building (treated as separation between buildings): IBC, 2006, Table 601 Walls: NFPA 101, paragraph 8.5.6.(1) Doors: NFPA 101, Table 8.3.4.2	Wet pipe sprinkler	0.30 gpm/ft^2 (12.2 L/min-m^2) over minimum application of 5000 ft^2 (464.5 m^2) Total flow (Est.): 2750 gpm (10,410 L/min)	a) NFPA 804, 2006, paragraph 10.8.2.1(2) (b) NEIL LCM, March 2008, A3.2.20.5.2.1.1.
		FT2502	Stairwell No. 3 (Room 212)	Walls: 2-hour fire resistive Doors: 3-hour fire rated	Walls: NFPA 101, paragraph 8.5.6.(1) Doors: NFPA 101, Table 8.3.4.2			
		FT2504	Stairwell No. 4 (Room 249)	Walls: 2-hour fire resistive Doors: 3-hour fire rated	Walls: NFPA 101, paragraph 8.5.6.(1) Doors: NFPA 101, Table 8.3.4.2			
		FT15Y2	Elevator Shaft (Room 250)	Walls: 2-hour fire resistive Doors: 1 ½ - hour fire rated	NFPA 804, paragraphs 8.1.2.4 and 8.1.2.5			

Table 9A.4.3.4 - Summary of Fire Protection Criteria
Floor 2F (Continued)

Fire Area	Description	Adjacent Fire Area	Adjacent Fire Area Description	Fire Rated Separation	Fire Separation Criteria	Automatic Suppression Type	Density	Suppression Criteria
FT1500	General Area	FT3501	Main Turbine Lube Oil Tank (Room 330)	Walls: 3-hour fire resistive Doors: 3-hour fire rated	NEIL LCM, March 2008, 3.2.9.1 NFPA 804, paragraph 8.1.2.3	Wet pipe sprinkler	0.30 gpm/ft^2 (12.2 L/min-m^2) over minimum application of 5000 ft^2 (464.5 m^2) Total flow (Est.): 2750 gpm (10,410 L/min)	a) NFPA 804, 2006, paragraph 10.8.2.1(2) (b) NEIL LCM, March 2008, A3.2.20.5.2.1.1.
		FT35X1	Safety Related Low Pressure Condensate Switchgear (Room 31X-2)	Walls: 3-hour fire resistive Doors: 3-hour fire rated	NEIL LCM, March 2008, 3.2.9.1			
		FT35X9	Generator Seal Oil Unit (Room 3X2)	Walls: 3-hour fire resistive Doors: 3-hour fire rated	NEIL LCM, March 2008, 3.2.9.1			
		FT35X8	Switchgear Room 'B' (Room 310)	Wall: 2-hour fire resistive	Specified by FPE at this location. NEIL LCM, March 2008, 3.2.9.5 NFPA 13, paragraph 8.15.10			
		FT35X3 FT35X2 FT35X4 FT35X5 FT35X6	125Vdc and 250Vdc Battery Rooms (Rooms 3X4, 3X5, 3X6, 3X7 and 3X8)	Wall: 2-hour fire resistive	Specified by FPE at this location. NFPA 804, paragraph 10.7.2 (Guidance followed for Safety Related equipment)			
		FT45X1	Stairwell No. 9 (Room 4X5)	Ceiling: 2-hour fire resistive	NFPA 101, paragraph 8.5.6.(1)			

Table 9A.4.3.4 - Summary of Fire Protection Criteria
Floor 2F (Continued)

Fire Area	Description	Adjacent Fire Area	Adjacent Fire Area Description	Fire Rated Separation	Fire Separation Criteria	Automatic Suppression Type	Density	Suppression Criteria
FT1500	General Area	FT2505	Main Steam Tunnel (Room 219)	Exterior Turbine Bldg. Wall: 3-hour fire resistive	NEIL LCM, March 2008, 3.2.9.1 NFPA 804, paragraph 8.1.2.3 Also, based on (IBC) H-4 Occupancy and Type 1A construction Exterior Turbine Bldg. Wall: IBC, 2006, Table 601	Wet pipe sprinkler	0.30 gpm/ft^2 (12.2 L/min-m^2) over minimum application of 5000 ft^2 (464.5 m^2) Total flow (Est.): 2750 gpm (10,410 L/min)	a) NFPA 804, 2006, paragraph 10.8.2.1(2) (b) NEIL LCM, March 2008, A3.2.20.5.2.1.1.
FT1502	Stairwell No. 1 (Room 114)	FT35X8	Switchgear Room 'B' (Room 310)	Walls: 2-hour fire resistive Door: 3-hour fire rated	Walls: NFPA 101, paragraph 8.5.6.(1) Doors: NFPA 101, Table 8.3.4.2	Wet pipe sprinkler	0.15 gpm/ft^2 (6.1 L/min-m^2) over 1500 ft^2 (139 m^2) Total flow (Est.): 850 gpm (3218 L/min)	Ordinary Hazard Group 1 per NFPA 13, paragraph 5.3.1

Table 9A.4.3.4 - Summary of Fire Protection Criteria
Floor 2F (Continued)

Fire Area	Description	Adjacent Fire Area	Adjacent Fire Area Description	Fire Rated Separation	Fire Separation Criteria	Automatic Suppression Type	Density	Suppression Criteria
FT1503	Stairwell No. 2 (Room 122)	FT1500	1 - General Area 2 - General Area 3 - Elevator Shaft (Room 250) 4 - Switchgear Room 'B' (Room 310)	Walls: 3-hour fire resistive Doors: 3 - hour fire rated	NEIL LCM, March 2008, 3.2.9.1 NFPA 804, paragraph 8.1.2.3 Also, based on (IBC) H-4 Occupancy and Type 1A construction Exterior Turbine Bldg. Wall: IBC, 2006, Table 601 Turbine Bldg. Floor over Radwaste Building (treated as separation between buildings): IBC, 2006, Table 601 Walls:NFPA 101, paragraph 8.5.6.(1) Doors:NFPA 101, Table 8.3.4.2	Wet pipe sprinkler	0.15 gpm/ft^2 (6.1 L/min-m^2) over 1500 ft^2 (139 m^2) Total flow (Est.): 850 gpm (3218 L/min)	Ordinary Hazard Group 1 per NFPA 13, paragraph 5.3.1
FT2502	Stairwell No. 3 (Room 212)	FT1500		Walls: 2-hour fire resistive Doors: 3-hour fire rated	Walls: NFPA 101, paragraph 8.5.6.(1) Doors: NFPA 101, Table 8.3.4.2	Wet pipe sprinkler	0.15 gpm/ft^2 (6.1 L/min-m^2) over 1500 ft^2 (139 m^2) Total flow (Est.): 850 gpm (3218 L/min)	Ordinary Hazard Group 1 per NFPA 13, paragraph 5.3.1
		FT15Y2		Walls: 2-hour fire resistive	NFPA 804, paragraphs 8.1.2.4 and 8.1.2.5			
		FT35X8		Wall: 2-hour fire resistive	Specified by FPE at this location. NEIL LCM, March 2008, 3.2.9.5 NFPA 13, paragraph 8.15.10			

Table 9A.4.3.4 - Summary of Fire Protection Criteria Floor 2F (Continued)

Fire Area	Description	Adjacent Fire Area	Adjacent Fire Area Description	Fire Rated Separation	Fire Separation Criteria	Automatic Suppression Type	Density	Suppression Criteria
FT2504	Stairwell No. 4 (Room 249)	FT1500	General Area	Walls: 2-hour fire resistive Doors: 3-hour fire rated	Walls: NFPA 101, paragraph 8.5.6.(1) Doors: NFPA 101, Table 8.3.4.2	Wet pipe sprinkler	0.15 gpm/ft^2 (6.1 L/min-m^2) over 1500 ft^2 (139 m^2) Total flow (Est.): 850 gpm (3218 L/min)	Ordinary Hazard Group 1 per NFPA 13, paragraph 5.3.1
		FT15Y1	Stairwell No. 8	Walls: 3-hour fire resistive	Walls: NFPA 101, paragraph 8.5.6.(1)			
FT15Y2	Elevator Shaft (Room 250)	FT1500	General Area	Walls: 2-hour fire resistive Doors: 3-hour fire rated	NFPA 804, paragraphs 8.1.2.4 and 8.1.2.5	Wet pipe sprinkler	0.20 gpm/ft^2 (8.2 L/min-m^2) over 1500 ft^2 (139 m^2) Total flow (Est.): 950 gpm (3596 L/min)	Ordinary Hazard Group 2 per NFPA 13, paragraph 5.3.2
		FT25X3	Switchgear Room 'A' (Room 210)	Wall: 2-hour fire resistive	Specified by FPE at this location. NEIL LCM, March 2008, 3.2.9.5 NFPA 13, paragraph 8.15.10			
		FT2502	Stairwell No. 3 (Room 212)	Walls: 2-hour fire resistive Doors: 3-hour fire rated	Walls: NFPA 101, paragraph 8.5.6.(1) Doors: NFPA 101, Table 8.3.4.2			
FT3501	Main Turbine Lube Oil Tank (Room 330)	FT1500	General Area	Walls: 3-hour fire resistive Doors: 3-hour fire rated Floor: 3-hour fire resistive Ceiling: 3-hour fire resistive	NEIL LCM, March 2008, 3.2.9.1 NFPA 804, paragraph 8.1.2.3	Deluge Foam Water Spray	0.50 gpm/ ft^2 (20.4 L/min-m^2) over the entire area (Est.) 960 ft^2 (89 m^2)) Total flow (Est.): 1220 gpm (4618 L/min)	NEIL LCM, paragraph 3.2.20.5 and Appendix A.3.2.20.5 NFPA 15, paragraphs 7.2.1.3 and 7.3.3 NFPA 16, paragraph 7.3.2 and Appendix A.7.3.2

Table 9A.4.3.4 - Summary of Fire Protection Criteria
Floor 2F (Continued)

Fire Area	Description	Adjacent Fire Area	Adjacent Fire Area Description	Fire Rated Separation	Fire Separation Criteria	Automatic Suppression Type	Density	Suppression Criteria
FT35X1	Safety Related Low Pressure Condensate Switchgear (Room 31X-2)	FT1500	General Area	Walls: 3-hour fire resistive Doors: 3-hour fire rated Floor: 3-hour fire resistive Ceiling: 3-hour fire resistive	NEIL LCM, March 2008, 3.2.9.1	Wet pipe sprinkler	0.20 gpm/ft^2 (8.2 L/min-m^2) over entire area (Est.)960 ft^2 (89 m^2) Total flow (Est.): 788 gpm (2983 L/min)	Ordinary Hazard Group 2 per NFPA 13, paragraph 5.3.2
FT35X9	Generator Seal Oil Unit (Room 3X2)	FT1500	General Area	Walls: 3-hour fire resistive Doors: 3-hour fire rated Floor: 3-hour fire resistive Ceiling: 3-hour fire resistive	NEIL LCM, March 2008, 3.2.9.1	Deluge Foam Water Spray	0.50 gpm/ ft^2 (20.4 L/min-m^2) over the entire area (Est. 540 ft^2 (50 m^2)) Total flow (Est.): 905 gpm (3426 L/min)	NEIL LCM, paragraph 3.2.20.5 and Appendix A.3.2.20.5 NFPA 15, paragraphs 7.2.1.3 and 7.3.3 NFPA 16, paragraph 7.3.2 and Appendix A.7.3.2

Table 9A.4.3.4 - Summary of Fire Protection Criteria
Floor 2F (Continued)

Fire Area	Description	Adjacent Fire Area	Adjacent Fire Area Description	Fire Rated Separation	Fire Separation Criteria	Automatic Suppression Type	Density	Suppression Criteria
FT35X8	Switchgear Room 'B' (Room 310)	FT1500	General Area	Wall: 2-hour fire resistive Ceiling: Minimum 1-hour fire resistive	Specified by FPE at this location. NEIL LCM, March 2008, 3.2.9.5 NFPA 13, paragraph 8.15.10	Wet pipe sprinkler	0.20 gpm/ft^2 (8.2 L/min-m^2) over 1500 ft^2 (139 m^2) Total flow (Est.): 950 gpm (3596 L/min)	Ordinary Hazard Group 2 per NFPA 13, paragraph 5.3.2
		FT25X3	Switchgear Room 'A' (Room 210)	Floor: Minimum 1-hour fire resistive	NEIL LCM, March 2008, 3.2.9.5 NFPA 13, paragraph 8.15.10			
		FT1502	Stairwell No. 1 (Room 114)	Walls: 2-hour fire resistive Door: 3-hour fire rated	Walls: NFPA 101, paragraph 8.5.6.(1) Doors: NFPA 101, Table 8.3.4.2			

Table 9A.4.3.4 - Summary of Fire Protection Criteria
Floor 2F (Continued)

Fire Area	Description	Adjacent Fire Area	Adjacent Fire Area Description	Fire Rated Separation	Fire Separation Criteria	Automatic Suppression Type	Density	Suppression Criteria
FT35X8	Switchgear Room 'B' (Room 310)	FT2502	Stairwell No. 3 (Room 212)	Walls: 2-hour fire resistive	Walls:NFPA 101, paragraph 8.5.6.(1)	Wet pipe sprinkler	0.20 gpm/ft^2 (8.2 L/min-m^2) over 1500 ft^2 (139 m^2) Total flow (Est.): 950 gpm (3596 L/min)	Ordinary Hazard Group 2 per NFPA 13, paragraph 5.3.2
		FT15Y1	Stairwell No. 8 (Room 1Y5)	Walls: 2-hour fire resistive Door: 3-hour fire rated	Walls:NFPA 101, paragraph 8.5.6.(1) Doors:NFPA 101, Table 8.3.4.2			
		FT15Y2	Elevator Shaft (Room 250)	Walls: 2-hour fire resistive	NFPA 804, paragraphs 8.1.2.4 and 8.1.2.5			
		FT35X3 FT35X2 FT35X4 FT35X5 FT35X6	125Vdc and 250Vdc Battery Rooms (Rooms 3X4, 3X5, 3X6, 3X7 and 3X8)	Walls :Minimum 1-hour fire resistive Doors: 3-hour fire rated Floors: Minimum 1-hour fire resistive Ceilings: Minimum 1-hour fire resistive	NFPA 804, paragraph 10.7.2 (Guidance followed for Safety Related equipment) NFPA 13, paragraph 8.15.10			
		FT3500	Combustion Turbine Generator Area (Rooms 317 and 2X8)	Walls: 3-hour fire resistive	NFPA 804, paragraph 8.1.2.3			
		FT35X7	Electrical Equipment (Room 3X9)	Walls: Minimum 1-hour fire resistive	NEIL LCM, March 2008, 3.2.9.5 NFPA 13, paragraph 8.15.10			

Table 9A.4.3.4 - Summary of Fire Protection Criteria
Floor 2F (Continued)

Fire Area	Description	Adjacent Fire Area	Adjacent Fire Area Description	Fire Rated Separation	Fire Separation Criteria	Automatic Suppression Type	Density	Suppression Criteria
FT35X3 FT35X2 FT35X4 FT35X5 FT35X6	125Vdc and 250Vdc Battery Rooms (Rooms 3X4, 3X5, 3X6, 3X7 and 3X8)	FT1500	General Area	Wall: 2-hour fire resistive	Specified by FPE at this location. NFPA 804, paragraph 10.7.2 (Guidance followed for Safety Related equipment) NFPA 13, paragraph 8.15.10	Wet pipe sprinkler	0.20 gpm/ft^2 (8.2 L/min-m^2) over 1500 ft^2 (139 m^2) Total flow (Est.): 950 gpm (3596 L/min)	Ordinary Hazard Group 2 per NFPA 13, paragraph 5.3.2
FT35X3 FT35X2 FT35X4 FT35X5 FT35X6	125Vdc and 250Vdc Battery Rooms (Rooms 3X4, 3X5, 3X6, 3X7 and 3X8)	FT35X3 FT35X2 FT35X4 FT35X5 FT35X6	125Vdc and 250Vdc Battery Rooms (Rooms 3X4, 3X5, 3X6, 3X7 and 3X8)	Walls: Minimum 1-hour fire resistive Doors: 3-hour fire rated Floors: Minimum 1-hour fire resistive Ceilings: Minimum 1-hour fire resistive	NFPA 804, paragraph 10.7.2 (Guidance followed for Safety Related equipment) NFPA 13, paragraph 8.15.10	Wet pipe sprinkler	0.20 gpm/ft^2 (8.2 L/min-m^2) over 1500 ft^2 (139 m^2) Total flow (Est.): 950 gpm (3596 L/min)	Ordinary Hazard Group 2 per NFPA 13, paragraph 5.3.2
		FT35X8	Switchgear Room ‘B’ (Room 310)	Walls: Minimum 1-hour fire resistive Doors: 3-hour fire rated Ceilings: Minimum 1-hour fire resistive	NFPA 804, paragraph 10.7.2 (Guidance followed for Safety Related equipment) NFPA 13, paragraph 8.15.10			
		FT2502	Stairwell No. 3 (Room 212)	Wall: 2-hour fire resistive	Specified by FPE at this location. NEIL LCM, March 2008, 3.2.9.5 NFPA 13, paragraph 8.15.10			

Table 9A.4.3.4 - Summary of Fire Protection Criteria
Floor 2F (Continued)

Fire Area	Description	Adjacent Fire Area	Adjacent Fire Area Description	Fire Rated Separation	Fire Separation Criteria	Automatic Suppression Type	Density	Suppression Criteria
FT15Y1	Stairwell No. 8 (Room 1X4)	FT35X8	Switchgear Room 'B' (Room 310)	Walls: 2-hour fire resistive Door: 3-hour fire rated	Walls: NFPA 101, paragraph 8.5.6.(1) Doors: NFPA 101, Table 8.3.4.2	Wet pipe sprinkler	0.15 gpm/ft^2 (6.1 L/min-m^2) over 1500 ft^2 (139 m^2) Total flow (Est.): 850 gpm (3218 L/min)	Ordinary Hazard Group 1 per NFPA 13, paragraph 5.3.1
		FT2504	Stairwell No. 4 (Room 249)	Walls: 3-hour fire resistive	Walls:NFPA 101, paragraph 8.5.6.(1)			
FT3500	Combustion Turbine Generator Area (Rooms 317 and 2X8)	FT35X8	Switchgear Room 'B' (Room 310)	Walls: 3-hour fire resistive	NFPA 804, paragraph 8.1.2.3	Wet Pipe Sprinkler	0.25 gpm/ft^2 (10.2 L/min-m^2) over 2500 ft^2 (230 m^2) Total flow (Est.): 1440 gpm (5451 L/min)	NFPA 37, paragraph 11.4.5.1 NOTE: Realistic criteria taken from NFPA 37. Flow and density taken from NFPA 804, paragraph 10.9.3, is very demanding (over entire area) and is not realistic for the size of STP 3 & 4 CTG Area.
FT35X7	Electrical Equipment (Room 3X9)	FT35X8	Switchgear Room 'B' (Room 310)	Walls: Minimum 1-hour fire resistive	NEIL LCM, March 2008, 3.2.9.5 NFPA 13, paragraph 8.15.10	Wet pipe sprinkler	0.20 gpm/ft^2 (8.2 L/min-m^2) over 1500 ft^2 (139 m^2) Total flow (Est.): 950 gpm (3596 L/min)	Ordinary Hazard Group 2 per NFPA 13, paragraph 5.3.2 Ordinary Hazard Group 2 per NFPA 13, paragraph 5.3.2

9A.4.3.5 Floor 3F (El. 27.8m (85'-10 ½")) – See Figure 9A.4-21 and Table 9A.4.3.5 Summary of Fire Protection Criteria Floor 3F

9A.4.3.5.1 Fire Area – FT1500 (General Area)

(1) Fire Area Boundary Description

Floor 3F shares fire area FT1500 with all other floors in the Turbine Building.

The following openings or non-fire rated openings are present in floor 3F extending downward to floor areas below:

- A large non fire-rated equipment hatch and grated opening exists in the floor on the northwest side of the building leading vertically down to floors 1F and 2F below
- A non-fire rated equipment access hatch is installed above the condensate filter maintenance area (room 342) on floor 2F below
- A non fire-rated equipment access hatch is installed above the low pressure condensate pump area (room 140) on floor B1F below
- A non fire-rated hatch is located above the turbine bypass valve on floor 2F below
- Two (2) large non fire-rated hatches are installed in floor 3F above the 5th and 6th stage feedwater heaters on floor 2F below
- A large non fire-rated hatch is installed above the turbine stop valves and turbine control valves on floor 2F below
- Large gaps and openings in floor 3F beneath the main turbine skirt that extend downward to the main condenser pit area (room 120)

Fire area FT1500 is bounded by:

- The Turbine Building exterior walls
- The exterior walls separating stairwell no. 2 (room 122, fire area FT1503)
- The interior walls enclosing stairwell no. 3 (room 212, fire area FT2502)
- The interior walls enclosing stairwell no. 4 (room 249, fire area FT2504)
- The interior walls enclosing the elevator shaft (room 250, fire area FT15Y2)
- The interior walls enclosing stairwell no. 9 (room 4X5, fire area FT45X1)

- A fire-rated hatch or concrete cover block, if necessary to obtain the proper fire-resistance, is installed over the safety-related low pressure condensate pump switchgear room (room 31X-2, fire area FT35X1) on floor 2F below
- A large fire-rated hatch or concrete cover block, if necessary to obtain the proper fire-resistance, is installed over the main turbine lube oil tank (room 330, fire area FT3501) on floor 2F below
- The exterior turbine building wall providing separation from the steam tunnel area (room 219, fire area FT2505)
- The floor 3F areas above switchgear room 'B' (room 310, fire area FT35X8), electrical equipment area (room 3X9, fire area FT35X7) and 125Vdc and 250Vdc battery rooms (room nos. 3X4, 3X5, 3X6, 3X7 and 3X8, fire areas FT35X3, FT35X2, FT35X4, FT35X5, and FT35X6, respectively)

(2) Equipment – See Table 9A.6-4

Safety Related	Provides Core Cooling
Yes	No

(3) Radioactive Material Present – None that can be released as a result of fire.

(4) Qualification of Fire Barriers –

The Turbine Building is classified as Type IA construction in accordance with the International Building Code (IBC), 2006. Type IA construction is non-combustible. The building structural frame, and all exterior and interior bearing walls, are required to be of 3 hour fire-resistive construction. The building floor is required to be of not less than 2 hour fire resistive construction, including supporting beams and joists. Also, the building roof is required to be of not less than 1 ½ hour fire resistive construction.

The enclosed stairwells that serve fire area FT1500 on floor 3F, stairwell nos. 2, 3, and 4 are of 2 hour fire-resistive concrete construction. These stairwells are separate fire areas and are discussed in subsections 9A.4.3.1.2, 9A.4.3.2.3 and 9A.4.3.1.3 (fire areas FT1503, FT2502 and FT2504).

Enclosed stairwell no. 9 provides access to floor 4F (elevation 38.3m (120'-4")). This stairwell is of 2 hour fire-resistive concrete construction. Stairwell no. 9 is described in subsection 9A.4.3.5.2.

The elevator shaft (room 250) is of 2 hour fire-resistive concrete construction, is a separate fire area (FT15Y2) and is described in subsection 9A.4.3.2.5.

The equipment access hatches, concrete cover blocks, or other method of providing the required fire-resistance rating, between the safety-related low

pressure condensate pump switchgear room (room 31X-2, fire area FT35X1) and main turbine lube oil tank area (room 330, fire area FT3501) and FT1500, are required to have a 3 hour fire-resistance rating.

Floor 3F areas above switchgear room 'B' (room 310, fire area FT35X8), electrical equipment area (room 3X9, fire area FT35X7) and 125Vdc and 250Vdc battery rooms (room nos. 3X4, 3X5, 3X6, 3X7 and 3X8, fire areas FT35X3, FT35X2, FT35X4, FT35X5, and FT35X6, respectively) are of a minimum 1 hour fire-resistive concrete construction. These floor areas include the reactor building exhaust fan area (room 412), turbine building equipment compartment exhaust fan area (room 4X3) and the lube oil area exhaust fan area.

(5) Combustibles Present:

Fire Loading	Total Heat of Combustion (MJ)
(a) Cable in conduit and dispersed in cable trays	Acceptable
(b) Limited quantities of lubricants in pumps	Negligible

(6) Detection Provided – Class A supervised POC, and manual alarm pull stations.

Manual Pull Locations: TA.4-T7.5, TH.5-T7.9, TJ.6-T7.6, TG.6-T1.9, TA.2-T8.2, TJ.5-T9.6

(7) Suppression Available:

Type	Location/Actuation
Modified Class III standpipes	Stairwells No. 1 <114>, No.2 <122>, No.3 <212>, No.4 <249>, No.8 <1Y5>, No.8 <1Y5>, and No. 9 <4X5>
ABC portable (hand) extinguishers and hose stations	TB.1-T2, TC.6-T2.8, TB-T4, TC.6-T5.1, TA.1-T5.8, TB.8-T6.9, TD.4-T6.4, TF.2-T6.8,TG.9-T6.8,TH.3-T8, TJ.1-T6, TG.6-T5.1, TJ.9-T4, TG.6-T2.9, TJ.1-T2, TE.1-T6.9, TG-T6.9, TE.1-T2.1, TF.9-T2.1, TF.5-T7, TE.2-T8.2, TH-T8.5, TF.3-T8.4,
Wet pipe sprinkler system Design density 12.2 L/min-m^2 (0.3 gpm/ft^2) over 464.5 m^2 (5000 ft^2)	Throughout floor 3F
Closed head pre-action spray system Design density 12.2 L/min-m^2 (0.3 gpm/ft^2), Assume 20 spray heads over 10 bearings at coverage of 4.65 m^2 (50 ft^2) per head	Turbine generator bearings
Wet pipe sprinkler system Design density 12.2 L/min-m^2 (0.3 gpm/ft^2 (5000 ft^2)	Beneath turbine skirt

(8) Fire Protection Design Criteria Employed:

(a) Fire detection and suppression capability is provided and accessible;

(b) Fire stops are provided for penetrations through rated fire barriers.

(9) Consequences of Fire – Postulated fire assumes loss of function. Smoke from a fire would be removed by the normal HVAC.

(10) Consequences of Fire Suppression – Suppression extinguishes the fire. Refer to Section 3.4, “Water Level (Flood) Design,” for drain system.

(11) Design Criteria Used for Protection Against Inadvertent Operation, Careless Operation or Rupture of the Suppression System:

(a) Provision of raised supports for the equipment

(b) Refer to Section 3.4, “Water Level (Flood) Design,” for drain system.

(12) Fire Containment or Inhibiting Methods Employed:

(a) Fire stops are provided for penetrations through fire rated barriers.

(b) The means of fire detection, suppression and alarming are provided and accessible.

(13) Remarks:

(a) The following safety-related equipment representing all four safety divisions is mounted on this floor:

C71-PT003 A-D

(b) Section 9A.5, Special Cases, provides justification for locating equipment from multiple safety divisions on this floor of the turbine building.

(c) Electrical cable insulation in conduit does not represent a combustible fire load.

(d) The total flow of the wet pipe sprinkler system on floor 3F with 1893 L/min (500 gpm) hose stream allowance is estimated to be 7,571 L/min (2750 gpm).

(e) The total flow of the closed head preaction spray system on main turbine bearings with a 1893 L/min (500 gpm) hose stream allowance is estimated to be 3,596 L/min (950 gpm).

(f) The total flow of the wet pipe sprinkler system beneath the main turbine skirt with a 1893 L/min (500 gpm) hose stream allowance is estimated to be 10,410 L/min (2750 gpm).

9A.4.3.5.2 Fire Area – FT45X1 (Stairwell No. 9 – Room 4X5)

(1) Fire Area Boundary Description

Stairwell No. 9 serves controlled areas inside the Turbine Building at floor level 3F.

Fire area FT45X1 extends vertically upward from floor 3F through floor 4F and provides access to and from floor 4F (elevation 38.3m (120’-4”)).

Stairwell no. 9 is a separate fire area bounded by interior fire walls at floor levels 3F and 4F.

(2) Equipment – See Table 9A.6-4

Safety Related	Provides Core Cooling
No	No

(3) Radioactive Material Present – None.

(4) Qualification of Fire Barriers – At floor levels 3F and 4F, walls enclosing stairwell no. 9 are a minimum of 2 hour fire-resistive concrete construction. Stairwell doors are a minimum of 1-1/2 hour fire rated (doors are 3-hour fire rated for consistency throughout the Turbine Building).

(5) Combustibles Present – No significant quantities of exposed combustibles.

(6) Detection Provided – Class A supervised POC at each building floor elevation and manual pull station external to the enclosed stairway at each floor elevation.

(7) Suppression Available:

Type	Location/Actuation
Modified Class III standpipe	Stairwell No. 9 <4X5>
ABC portable (hand) extinguishers and hose stations	TH.3-T8, TJ.1-T6, TH-T8.5
Wet pipe sprinkler system Design density 6.1 L/min-m^2 (0.15 gpm/ft^2)	Stairwell No. 9

(8) Fire Protection Design Criteria Employed:

(a) The stairwell is located in a separate fire-resistive enclosure.

(b) Fire detection and suppression capability is provided and accessible.

(9) Consequences of Fire – The postulated fire assumes loss of function of the enclosed stairway. Smoke from a fire would be removed by the normal HVAC system.

(10) Consequences of Fire Suppression – Suppression extinguishes the fire. Refer to to Section 3.4, “Water Level (Flood) Design,” for drain system.

(11) Design Criteria Used for Protection Against Inadvertent Operation, Careless Operation or Rupture of the Suppression System:

(a) Refer to Section 3.4, “Water Level (Flood) Design,” for drain system.

(12) Fire Containment or Inhibiting Methods Employed:

(a) The function is provided in a fire-resistive enclosure.

(b) Fire stops are provided for penetrations through fire rated barriers.

(c) The means of fire detection, suppression and alarming are provided and accessible.

(13) Remarks – The total flow of the wet pipe sprinkler system with a 1893 L/min (500 gpm) hose stream allowance is estimated to be 3,218 L/min (850 gpm).

Table 9A.4.3.5 - Summary of Fire Protection Criteria
Floor 3F

Fire Area	Description	Adjacent Fire Area	Adjacent Fire Area Description	Fire Rated Separation	Fire Separation Criteria	Automatic Suppression Type	Density	Suppression Criteria
FT1500	General Area	FT1503	Stairwell No. 2 (Room 122)	Walls: 3-hour fire resistive Doors: 3 - hour fire rated	NEIL LCM, March 2008, 3.2.9.1 NFPA 804, paragraph 8.1.2.3 Also, based on (IBC) H-4 Occupancy and Type 1A construction Exterior Turbine Bldg. Wall: IBC, 2006, Table 601 Turbine Bldg. Floor over Radwaste Building (treated as separation between buildings): IBC, 2006, Table 601 Walls: NFPA 101, paragraph 8.5.6.(1) Doors: NFPA 101, Table 8.3.4.2	Wet pipe sprinkler	0.30 gpm/ft^2 (12.2 L/min-m^2) over minimum application of 5000 ft^2 (464.5 m^2) Total flow (Est.): 2750 gpm (10,410 L/min)	a) NFPA 804, 2006, paragraph 10.8.2.1(2) (b) NEIL LCM, March 2008, A3.2.20.5.2.1.1.
		FT2502	Stairwell No. 3 (Room 212)	Walls: 2-hour fire resistive Doors: 3-hour fire rated	Walls: NFPA 101, paragraph 8.5.6.(1) Doors: NFPA 101, Table 8.3.4.2			
		FT2504	Stairwell No. 4 (Room 249)	Walls: 2-hour fire resistive Doors: 3-hour fire rated	Walls: NFPA 101, paragraph 8.5.6.(1) Doors: NFPA 101, Table 8.3.4.2			
		FT15Y2	Elevator Shaft (Room 250)	Walls: 2-hour fire resistive Doors: 1 ½ - hour fire rated	NFPA 804, paragraphs 8.1.2.4 and 8.1.2.5			

Table 9A.4.3.5 - Summary of Fire Protection Criteria Floor 3F (Continued)

Fire Area	Description	Adjacent Fire Area	Adjacent Fire Area Description	Fire Rated Separation	Fire Separation Criteria	Automatic Suppression Type	Density	Suppression Criteria
FT1500 General Area		FT45X1	Stairwell No. 9 (Room 4X5)	Walls: 2-hour fire resistive Doors: 3-hour fire rated	Walls: NFPA 101, paragraph 8.5.6.(1) Doors: NFPA 101, Table 8.3.4.2	Wet pipe sprinkler	0.30 gpm/ft^2 (12.2 L/min-m^2) over minimum application of 5000 ft^2 (464.5 m^2) Total flow (Est.): 2750 gpm (10,410 L/min)	a) NFPA 804, 2006, paragraph 10.8.2.1(2) (b) NEIL LCM, March 2008, A3.2.20.5.2.1.1.
		FT55X1	Stairwell No. 10 (Room 5X1)	Ceiling: 2-hour fire resistive	NFPA 101, paragraph 8.5.6.(1)			
		FT2505	Main Steam Tunnel (Room 219)	Exterior Turbine Bldg. Wall: 3-hour fire resistive	NEIL LCM, March 2008, 3.2.9.1 NFPA 804, paragraph 8.1.2.3 Also, based on (IBC) H-4 Occupancy and Type 1A construction Exterior Turbine Bldg. Wall: IBC, 2006, Table 601			
		FT35X1	Safety Related Low Pressure Condensate Switchgear (Room 31X-2)	Floor Hatch or Cover Block: 3-hour fire resistive	NEIL LCM, March 2008, 3.2.9.1			
		FT3501	Main Turbine Lube Oil Tank (Room 330)	Floor Hatch or Cover Block: 3-hour fire resistive	NEIL LCM, March 2008, 3.2.9.1 NFPA 804, paragraph 8.1.2.3			
		FT35X8	Switchgear Room 'B' (Room 310)	Floor: Minimum 1-hour fire resistive	NEIL LCM, March 2008, 3.2.9.5 NFPA 13, paragraph 8.5.10			

Table 9A.4.3.5 - Summary of Fire Protection Criteria
Floor 3F (Continued)

Fire Area	Description	Adjacent Fire Area	Adjacent Fire Area Description	Fire Rated Separation	Fire Separation Criteria	Automatic Suppression Type	Density	Suppression Criteria
FT1500	General Area	FT3500	Combustion Turbine Generator Area (Rooms 317 and 2X8)	Floor: 3-hour fire resistive	NFPA 804, paragraph 8.1.2.3	Wet pipe sprinkler	0.30 gpm/ft^2 (12.2 L/min-m^2) over minimum application of 5000 ft^2 (464.5 m^2) Total flow (Est.): 2750 gpm (10,410 L/min)	a) NFPA 804, 2006, paragraph 10.8.2.1(2) (b) NEIL LCM, March 2008, A3.2.20.5.2.1.1.
		FT35X7	Electrical Equipment (Room 3X9)	Floor: Minimum 1-hour fire resistive	NEIL LCM, March 2008, 3.2.9.5 NFPA 13, paragraph 8.15.10			
FT1500	General Area	--	Main Turbine Bearings	--		Closed head pre-action spray	0.30 gpm/ft^2 (12.2 L/min-m^2) over 500 ft^2 (46.5 m^2) Total flow (Est.): 3,596 L/min (950 gpm)	NEIL LCM, March 2008, 3.2.20.5 NFPA 804, paragraph 10.8.3
		--	Beneath Main Turbine Skirt	--		Wet pipe sprinkler	0.30 gpm/ft^2 (12.2 L/min-m^2) over minimum application of 5000 ft^2 (464.5 m^2) Total flow (Est.): 2750 gpm (10,410 L/min)	NEIL LCM, March 2008, 3.2.20.5 NFPA 804, paragraph 10.8.2

Table 9A.4.3.5 - Summary of Fire Protection Criteria
Floor 3F (Continued)

Fire Area	Description	Adjacent Fire Area	Adjacent Fire Area Description	Fire Rated Separation	Fire Separation Criteria	Automatic Suppression Type	Density	Suppression Criteria
FT1503	Stairwell No. 2 (Room 122)	FT1500	General Area	Walls: 3-hour fire resistive Doors: 3 - hour fire rated	NEIL LCM, March 2008, 3.2.9.1 NFPA 804, paragraph 8.1.2.3 Also, based on (IBC) H-4 Occupancy and Type 1A construction Exterior Turbine Bldg. Wall: IBC, 2006, Table 601 Turbine Bldg. Floor over Radwaste Building (treated as separation between buildings): IBC, 2006, Table 601 Walls: NFPA 101, paragraph 8.5.6.(1) Doors: NFPA 101, Table 8.3.4.2	Wet pipe sprinkler	0.15 gpm/ft^2 (6.1 L/min-m^2) over 1500 ft^2 (139 m^2) Total flow (Est.): 850 gpm (3218 L/min)	Ordinary Hazard Group 1 per NFPA 13, paragraph 5.3.1
FT2502	Stairwell No. 3 (Room 212)	FT1500	FT1500	General Area	Walls: 2-hour fire resistive Doors: 1 ½ - hour fire rated	Wet pipe sprinkler	0.15 gpm/ft^2 (6.1 L/min-m^2) over 1500 ft^2 (139 m^2) Total flow (Est.): 850 gpm (3218 L/min)	Ordinary Hazard Group 1 per NFPA 13, paragraph 5.3.1
			FT15Y2	Elevator Shaft (Room 250)	Walls: 2-hour fire resistive			

Table 9A.4.3.5 - Summary of Fire Protection Criteria
Floor 3F (Continued)

Fire Area	Description	Adjacent Fire Area	Adjacent Fire Area Description	Fire Rated Separation	Fire Separation Criteria	Automatic Suppression Type	Density	Suppression Criteria
FT2504	Stairwell No. 4 (Room 249)	FT1500	General Area	Walls: 2-hour fire resistive Doors: 3- hour fire rated	Walls: NFPA 101, paragraph 8.5.6.(1) Doors: NFPA 101, Table 8.3.4.2	Wet pipe sprinkler	0.15 gpm/ft^2 (6.1 L/min-m^2) over 1500 ft^2 (139 m^2) Total flow (Est.): 850 gpm (3218 L/min)	Ordinary Hazard Group 1 per NFPA 13, paragraph 5.3.1
		FT15Y1	Stairwell No. 8	Walls: 3-hour fire resistive	Walls: NFPA 101, paragraph 8.5.6.(1)			
FT15Y2	Elevator Shaft (Room 250)	FT1500	General Area	Walls: 2-hour fire resistive Doors: 1 ½ - hour fire rated	NFPA 804, paragraphs 8.1.2.4 and 8.1.2.5	Wet pipe sprinkler	0.20 gpm/ft^2 (8.2 L/min-m^2) over 1500 ft^2 (139 m^2) Total flow (Est.): 950 gpm (3596 L/min)	Ordinary Hazard Group 2 per NFPA 13, paragraph 5.3.2
		FT2502	Stairwell No. 3 (Room 212)	Walls: 2-hour fire resistive	Walls: NFPA 101, paragraph 8.5.6.(1) Doors: NFPA 101, Table 8.3.4.2			
FT15Y1	Stairwell No. 8 (Room 1X4)	FT2504	Stairwell No. 4 (Room 249)	Walls: 3-hour fire resistive	Walls: NFPA 101, paragraph 8.5.6.(1)	Wet pipe sprinkler	0.15 gpm/ft^2 (6.1 L/min-m^2) over 1500 ft^2 (139 m^2) Total flow (Est.): 850 gpm (3218 L/min)	Ordinary Hazard Group 1 per NFPA 13, paragraph 5.3.1
FT45X1	Stairwell No. 9 (Room 4X5)	FT1500	General Area	Walls: 2-hour fire resistive Doors: 3- hour fire rated Floor: 2-hour fire resistive	Walls and Ceiling: NFPA 101, paragraph 8.5.6.(1) Doors: NFPA 101, Table 8.3.4.2	Wet pipe sprinkler	0.15 gpm/ft^2 (6.1 L/min-m^2) over 1500 ft^2 (139 m^2) Total flow (Est.): 850 gpm (3218 L/min)	Ordinary Hazard Group 1 per NFPA 13, paragraph 5.3.1

9A.4.3.6 Floor 4F (El. 38.3m (120'-4")) – See Figure 9A.4-33 and Table 9A.4.3.6 Summary of Fire Protection Criteria Floor 4F

9A.4.3.6.1 Fire Area – FT1500 (General Area)

(1) Fire Area Boundary Description

Floor 4F shares fire area FT1500 with all other floors in the Turbine Building.

Fire area FT1500 is bounded by:

- The Turbine Building exterior walls
- The interior walls enclosing stairwell no. 9 (room 4X5, fire area FT45X1)
- The interior walls enclosing stairwell no. 10 (room 5X1, fire area FT55X1)

(2) Equipment – See Table 9A.6-4

Safety Related	Provides Core Cooling
No	No

(3) Radioactive Material Present – None that can be released as a result of fire.

(4) Qualification of Fire Barriers –

The Turbine Building is classified as Type IA construction in accordance with the International Building Code (IBC), 2006. Type IA construction is non-combustible. The building structural frame, and all exterior and interior bearing walls, are required to be of 3 hour fire-resistive construction. The building floor is required to be of not less than 2 hour fire resistive construction, including supporting beams and joists. Also, the building roof is required to be of not less than 1 ½ hour fire resistive construction.

Enclosed stairwell no. 9 extends upward from floor 3F and provides access to equipment on floor 4F. This stairwell is of 2 hour fire-resistive concrete construction. Stairwell no. 9 is described in subsection 9A.4.3.5.2.

Enclosed stairwell no. 10 extends upward from floor 4F and provides access to equipment on floor 5F. This stairwell is of 2 hour fire-resistive concrete construction. Stairwell no. 10 is described in subsection 9A.4.3.6.2.

(5) Combustibles Present:

Fire Loading	Total Heat of Combustion (MJ)
(a) Cable in conduit and dispersed in cable trays	Acceptable
(b) Limited quantities of lubricants in pumps	Negligible

(6) Detection Provided – Class A supervised POC, and manual alarm pull stations.

Manual Pull Locations: TA.4-T8, TJ.6-T7.6, TF-T6.6

(7) Suppression Available:

Type	Location/Actuation
Modified Class III standpipes	Stairwells No.8 <1Y5>, No. 9 <4X5>, and No. 10 <5X1>
ABC portable (hand) extinguishers and hose stations	TD.9-T2, TF.1-T2, TD.9-T6, TF.1-T6, TB.1-T8, TC.9-T8, TE.4-T8, TF.5-T8, TH.9-T8, TG.8-T6.8
Wet pipe sprinkler system Design density 12.2 L/min-m^2 (0.3 gpm/ft^2) over 464.5 m^2 (5000 ft^2)	Throughout floor 4F

(8) Fire Protection Design Criteria Employed:

(a) Fire detection and suppression capability is provided and accessible;

(b) Fire stops are provided for penetrations through rated fire barriers.

(9) Consequences of Fire – Postulated fire assumes loss of function. Smoke from a fire would be removed by the normal HVAC.

(10) Consequences of Fire Suppression – Suppression extinguishes the fire. Refer to Section 3.4, “Water Level (Flood) Design,” for drain system.

(11) Design Criteria Used for Protection Against Inadvertent Operation, Careless Operation or Rupture of the Suppression System:

(a) Provision of raised supports for the equipment

(b) Refer to Section 3.4, “Water Level (Flood) Design,” for drain system.

(12) Fire Containment or Inhibiting Methods Employed:

(a) Fire stops are provided for penetrations through fire rated barriers.

(b) The means of fire detection, suppression and alarming are provided and accessible.

(13) Remarks – The total flow of the wet pipe sprinkler system on floor 4F with a 1893 L/min (500 gpm) hose stream allowance is estimated to be 10,410 L/min (2750 gpm).

9A.4.3.6.2 Fire Area – FT55X1 (Stairwell No. 10 – Room 5X1)

(1) Fire Area Boundary Description

Stairwell No. 10 serves controlled areas inside the Turbine Building at floor level 4F.

Fire area FT55X1 extends vertically upward from floor 4F through floor 5F and provides access to and from floor 5F (elevation 47.2m).

Stairwell no. 10 is a separate fire area bounded by interior fire walls at floor levels 4F and 5F.

(2) Equipment – See Table 9A.6-4

Safety Related	Provides Core Cooling
No	No

(3) Radioactive Material Present – None.

(4) Qualification of Fire Barriers – At floor levels 4F and 5F, walls enclosing stairwell no. 10 are a minimum of 2 hour fire-resistive concrete construction. Stairwell doors are a minimum of 1-1/2 hour fire rated (doors are 3-hour fire rated for consistency throughout the Turbine Building).

(5) Combustibles Present – No significant quantities of exposed combustibles.

(6) Detection Provided – Class A supervised POC at each building floor elevation and manual pull station external to the enclosed stairway at each floor elevation.

(7) Suppression Available:

Type	Location/Actuation
Modified Class III standpipe	Stairwell No. 10 <5X1>
ABC portable (hand) extinguishers and hose stations	TE.4-T8, TF.5-T8
Wet pipe sprinkler system Design density 6.1 L/min-m^2 (0.15 gpm/ft^2)	Stairwell No. 10

(8) Fire Protection Design Criteria Employed:

(a) The stairwell is located in a separate fire-resistive enclosure.

(b) Fire detection and suppression capability is provided and accessible.

(9) Consequences of Fire – The postulated fire assumes loss of function of the enclosed stairway. Smoke from a fire would be removed by the normal HVAC system.

(10) Consequences of Fire Suppression – Suppression extinguishes the fire. Refer to to Section 3.4, “Water Level (Flood) Design,” for drain system.

(11) Design Criteria Used for Protection Against Inadvertent Operation, Careless Operation or Rupture of the Suppression System:

(a) Refer to Section 3.4, “Water Level (Flood) Design,” for drain system.

(12) Fire Containment or Inhibiting Methods Employed:

(a) The function is provided in a fire-resistive enclosure.

(b) Fire stops are provided for penetrations through fire rated barriers.

(c) The means of fire detection, suppression and alarming are provided and accessible.

(13) Remarks – The total flow of the wet pipe sprinkler system with a 1893 L/min (500 gpm) hose stream allowance is estimated to be 3,218 L/min (850 gpm)

Table 9A.4.3.6 - Summary of Fire Protection Criteria
Floor 4F

Fire Area	Description	Adjacent Fire Area	Adjacent Fire Area Description	Fire Rated Separation	Fire Separation Criteria	Automatic Suppression Type	Density	Suppression Criteria
FT1500	General Area	FT15Y1	Stairwell No. 8 (Room 1X4)	Walls: 3-hour fire resistive Doors: 3 - hour fire rated	NEIL LCM, March 2008, 3.2.9.1 NFPA 804, paragraph 8.1.2.3 Also, based on (IBC) H-4 Occupancy and Type 1A construction Exterior Turbine Bldg. Wall: IBC, 2006, Table 601 Turbine Bldg. Floor over Radwaste Building (treated as separation between buildings): IBC, 2006, Table 601 Walls: NFPA 101, paragraph 8.5.6.(1) Doors: NFPA 101, Table 8.3.4.2	Wet pipe sprinkler	0.30 gpm/ft^2 (12.2 L/min-m^2) over minimum application of 5000 ft^2 (464.5 m^2) Total flow (Est.): 2750 gpm (10,410 L/min)	a) NFPA 804, 2006, paragraph 10.8.2.1(2) (b) NEIL LCM, March 2008, A3.2.20.5.2.1.1.
		FT45X1	Stairwell No. 9 (Room 4X5)	Walls: 2-hour fire resistive Doors: 3 - hour fire rated	Walls: NFPA 101, paragraph 8.5.6.(1) Doors: NFPA 101, Table 8.3.4.2			
		FT55X1	Stairwell No. 10 (Room 5X1)	Walls: 2-hour fire resistive Doors: 3 - hour fire rated	Walls: NFPA 101, paragraph 8.5.6.(1) Doors: NFPA 101, Table 8.3.4.2			

Table 9A.4.3.6 - Summary of Fire Protection Criteria Floor 4F (Continued)

Fire Area	Description	Adjacent Fire Area	Adjacent Fire Area Description	Fire Rated Separation	Fire Separation Criteria	Automatic Suppression Type	Density	Suppression Criteria
FT1500	General Area	FT2505	Main Steam Tunnel (Room 219)	Exterior Turbine Bldg. Wall: 3-hour fire resistive	NEIL LCM, March 2008, 3.2.9.1 NFPA 804, paragraph 8.1.2.3 Also, based on (IBC) H-4 Occupancy and Type 1A construction Exterior Turbine Bldg. Wall: IBC, 2006, Table 601	Wet pipe sprinkler	0.30 gpm/ft^2 (12.2 L/min-m^2) over minimum application of 5000 ft^2 (464.5 m^2) Total flow (Est.): 2750 gpm (10,410 L/min)	a) NFPA 804, 2006, paragraph 10.8.2.1(2) (b) NEIL LCM, March 2008, A3.2.20.5.2.1.1.
FT15Y1	Stairwell No. 8 (Room 1X4)	FT1500	General Area	Walls: 3-hour fire resistive Doors: 3 - hour fire rated	NEIL LCM, March 2008, 3.2.9.1 NFPA 804, paragraph 8.1.2.3 Also, based on (IBC) H-4 Occupancy and Type 1A construction Exterior Turbine Bldg. Wall: IBC, 2006, Table 601 Walls: NFPA 101, paragraph 8.5.6.(1) Doors: NFPA 101, Table 8.3.4.2	Wet pipe sprinkler	0.15 gpm/ft^2 (6.1 L/min-m^2) over 1500 ft^2 (139 m^2) Total flow (Est.): 850 gpm (3218 L/min)	Ordinary Hazard Group 1 per NFPA 13, paragraph 5.3.1

Table 9A.4.3.6 - Summary of Fire Protection Criteria
Floor 4F (Continued)

Fire Area	Description	Adjacent Fire Area	Adjacent Fire Area Description	Fire Rated Separation	Fire Separation Criteria	Automatic Suppression Type	Density	Suppression Criteria
FT45X1	Stairwell No. 9 (Room 4X5)	FT1500	General Area	Walls: 2-hour fire resistive Doors: 3 - hour fire rated	Walls: NFPA 101, paragraph 8.5.6.(1) Doors: NFPA 101, Table 8.3.4.2	Wet pipe sprinkler	0.15 gpm/ft^2 (6.1 L/min-m^2) over 1500 ft^2 (139 m^2) Total flow (Est.): 850 gpm (3218 L/min)	Ordinary Hazard Group 1 per NFPA 13, paragraph 5.3.1
FT55X1	Stairwell No. 10 (Room 5X1)	FT1500	General Area	Walls: 2-hour fire resistive Doors: 3 - hour fire rated Floor: 2-hour fire resistive	Walls: NFPA 101, paragraph 8.5.6.(1) Doors: NFPA 101, Table 8.3.4.2	Wet pipe sprinkler	0.15 gpm/ft^2 (6.1 L/min-m^2) over 1500 ft^2 (139 m^2) Total flow (Est.): 850 gpm (3218 L/min)	Ordinary Hazard Group 1 per NFPA 13, paragraph 5.3.1

9A.4.3.7 Floor 5F (El. 47.2m) – See Figure 9A.4-34 and Table 9A.4.3.7 Summary of Fire Protection Criteria Floor 5F

9A.4.3.7.1 Fire Area – FT1500 (General Area)

(1) Fire Area Boundary Description

Floor 5F shares fire area FT1500 with all other floors in the Turbine Building.

Fire area FT1500 is bounded by:

- The Turbine Building exterior walls
- The interior walls enclosing stairwell no. 10 (room 5X1, fire area FT55X1)

(2) Equipment – See Table 9A.6-4

Safety Related	Provides Core Cooling
No	No

(3) Radioactive Material Present – None that can be released as a result of fire.

(4) Qualification of Fire Barriers –

The Turbine Building is classified as Type IA construction in accordance with the International Building Code (IBC), 2006. Type IA construction is non-combustible. The building structural frame, and all exterior and interior bearing walls, are required to be of 3 hour fire-resistive construction. The building floor is required to be of not less than 2 hour fire resistive construction, including supporting beams and joists. Also, the building roof is required to be of not less than 1 ½ hour fire resistive construction.

Enclosed stairwell no. 10 extends upward from floor 4F and provides access to equipment on floor 5F. This stairwell is of 2 hour fire-resistive concrete construction. Stairwell no. 10 is described in subsection 9A.4.3.6.2.

(5) Combustibles Present:

Fire Loading	Total Heat of Combustion (MJ)
(a) Cable in conduit and dispersed in cable trays	Acceptable
(b) Limited quantities of lubricants in pumps	Negligible

(6) Detection Provided – Class A supervised POC, and manual alarm pull stations.

Manual Pull Locations: TF-T6.6

(7) Suppression Available:

Type	Location/Actuation
Modified Class III standpipe	Stairwells No. 10 <5X1>
ABC portable (hand) extinguishers and hose stations	TB.8-T7, TB.8-T6.2, TD.1-T6.2, TF-T6.2
Wet pipe sprinkler system Design density 12.2 L/min-m^2 (0.3 gpm/ft^2) over 464.5 m^2 (5000 ft^2)	Throughout floor 5F

(8) Fire Protection Design Criteria Employed:

(a) Fire detection and suppression capability is provided and accessible.

(b) Fire stops are provided for penetrations through rated fire barriers.

(9) Consequences of Fire – Postulated fire assumes loss of function. Smoke from a fire would be removed by the normal HVAC.

(10) Consequences of Fire Suppression – Suppression extinguishes the fire. Refer to Section 3.4, “Water Level (Flood) Design,” for drain system.

(11) Design Criteria Used for Protection Against Inadvertent Operation, Careless Operation or Rupture of the Suppression System:

(a) Provision of raised supports for the equipment

(b) Refer to Section 3.4, “Water Level (Flood) Design,” for drain system.

(12) Fire Containment or Inhibiting Methods Employed:

(a) Fire stops are provided for penetrations through fire rated barriers.

(b) The means of fire detection, suppression and alarming are provided and accessible.

(13) Remarks – The total flow of the wet pipe sprinkler system on floor 5F with a 1893 L/min (500 gpm) hose stream allowance is estimated to be 10,410 L/min (2750 gpm).

Table 9A.4.3.7 - Summary of Fire Protection Criteria
Floor 5F

Fire Area	Description	Adjacent Fire Area	Adjacent Fire Area Description	Fire Rated Separation	Fire Separation Criteria	Automatic Suppression Type	Density	Suppression Criteria
FT1500	General Area	FT55X1	Stairwell No. 10 (Room 5X1)	Walls: 2-hour fire resistive Doors: 3 - hour fire rated	NEIL LCM, March 2008, 3.2.9.1 NFPA 804, paragraph 8.1.2.3 Also, based on (IBC) H-4 Occupancy and Type 1A construction Exterior Turbine Bldg. Wall: IBC, 2006, Table 601 Walls: NFPA 101, paragraph 8.5.6.(1) Doors: NFPA 101, Table 8.3.4.2	Wet pipe sprinkler	0.30 gpm/ft^2 (12.2 L/min-m^2) over minimum application of 5000 ft^2 (464.5 m^2) Total flow (Est.): 2750 gpm (10,410 L/min)	a) NFPA 804, 2006, paragraph 10.8.2.1(2) (b) NEIL LCM, March 2008, A3.2.20.5.2.1.1.

Table 9A.4.3.7 - Summary of Fire Protection Criteria Floor 5F (Continued)

Fire Area	Description	Adjacent Fire Area	Adjacent Fire Area Description	Fire Rated Separation	Fire Separation Criteria	Automatic Suppression Type	Density	Suppression Criteria
FT1500	General Area	FT2505	Main Steam Tunnel (Room 219)	Exterior Turbine Bldg. Wall: 3-hour fire resistive	NEIL LCM, March 2008, 3.2.9.1 NFPA 804, paragraph 8.1.2.3 Also, based on (IBC) H-4 Occupancy and Type 1A construction Exterior Turbine Bldg. Wall: IBC, 2006, Table 601			
FT55X1	Stairwell No. 10 (Room 5X1)	FT1500	General Area	Walls: 2-hour fire resistive Doors: 3 - hour fire rated	NEIL LCM, March 2008, 3.2.9.1 NFPA 804, paragraph 8.1.2.3 Also, based on (IBC) H-4 Occupancy and Type 1A construction Exterior Turbine Bldg. Wall: IBC, 2006, Table 601 Walls: NFPA 101, paragraph 8.5.6.(1) Doors NFPA 101, Table 8.3.4.2	Wet pipe sprinkler	0.15 gpm/ft^2 (6.1 L/min-m^2) over 1500 ft^2 (139 m^2) Total flow (Est.): 850 gpm (3218 L/min)	Ordinary Hazard Group 1 per NFPA 13, paragraph 5.3.1

The following figures are located in Chapter 21:

- Figure 9A.4-4 Reactor Building Fire Protection at Elevation 12300 mm
- Figure 9A.4-9 Reactor Building Fire Protection, Section A-A
- Figure 9A.4-17 Turbine Building Fire Protection at El. 2300 mm
- Figure 9A.4-18 Turbine Building Fire Protection at El. 6300 mm
- Figure 9A.4-19 Turbine Building Fire Protection at El. 12300 mm
- Figure 9A.4-20 Turbine Building Fire Protection at El. 19700 mm
- Figure 9A.4-21 Turbine Building Fire Protection at El. 27800 mm
- Figure 9A.4-28 Radwaste Building Fire Protection, ~~*Section A-A*~~ RWB Sections
- Figure 9A.4-29 Radwaste Building Fire Protection at El - ~~*1500*~~ 1700 mm
- Figure 9A.4-30 Radwaste Building Fire Protection at El ~~*4800*~~ 5300 mm
- Figure 9A.4-31 Radwaste Building Fire Protection at El 12300 mm
- Figure 9A.4-32 Radwaste Building Fire Protection at El ~~*21000*~~ 18300 mm
- Figure 9A.4-33 Turbine Building Fire Protection at El. 38300 mm
- Figure 9A.4-34 Turbine Building Fire Protection at El. 47200 mm

9A.5 Special Cases

STD DEP T1 2.14-1

STD DEP T1 3.4-1

9A.5.5.3 Main Steamline ADS Relief Valves

The Division 1 and 2 signal cables are run in separate conduit from their location on the valve to the appropriate divisional penetration and, from there, via divisional raceways to their ~~multiplex~~ data communication *interfaces*.

9A.5.5.5 Under the Reactor Vessel

(2) FMCRD Separation Switch Cables

The FMCRD cables for the Class 1E separation switches of each FMCRD are classified as safety related and separated into two groups (A and B) for routing out of the undervessel area to two separate divisions of the essential ~~multiplexing system~~ communications function (ECF)*. The cables are routed under the vessel through pull boxes inside the pedestal; then through cable boxes and raceways to electrical containment (RCCV) penetrations. The separation switch cables are then routed from the containment penetrations to ~~essential multiplexing system~~* ECF *panels in the reactor building. The installation of these Class 1E cables is arranged so that "A" and "B" cables travel in opposite directions from under the vessel and pass through penetrations on the opposite side of the reactor building.*

The cables receive low-voltage (approx. 48 volts) power from the ~~essential multiplex system~~ ECF *power supplies. This provides natural circuit protection in event of shorts or grounds on the system. Such events would not jeopardize the integrity or independence of the higher voltage divisional power busses which are upstream of the power supplies*.

9A.5.5.9 ~~*Flammability Control System*~~Not Used

~~*The flammability control system equipment is located in a large enclosed area at grade level at approximately 180 degrees azimuth. The rooms have a fire barrier floor and is completely surrounded by fire barrier walls and doors. There are large access doors to the outside at the centerline of the room.*~~

~~*The FCS is made up of two independent redundant divisions (Divisions 2 and 3), and each division is located in the fire area division 2 and 3 respectively. Each division has two suction isolation valves (inboard and outboard) and two return isolation valves (inboard and outboard). The inboard isolation valves are motor-operated (MO) valves, and the outboard isolation valves are fail close (FC) air operated (AO) solenoid valves (two solenoids per valve). They are powered from division 1 and 4. Fire in either division may cause the inboard valves (Div. 2 or 3) to fail to operate, but the outboard isolation valves are still capable to isolate because they are powered from different*~~

~~divisions (Div. 1 and 4). Loss of a complete division is acceptable because FCS is made up of two independent redundant divisions mounted in two separated fire areas.~~

9A.5.5.13 Reactor Building Operating Deck Radiation Monitors

STD DEP 11.5-1

Radiation monitoring within this area is facilitated by two independent systems. The area radiation monitoring system and the process radiation monitoring system.

The area radiation monitoring (ARM) system is non-safety related and uses two radiation channels in the fuel storage and handling areas. It has no system actuation function, but is used for monitoring of background radiation and radiation resulting from accidental fuel drops. The sensors are mounted on the walls within the fire zone area. These detectors are designed to annunciate local and control room alarms for both high and low radiation conditions. The low condition is an indication of an inoperative radiation monitor. Loss of these detectors, due to fire, does not impact plant safety.

The process radiation monitoring (PRM) channels that are utilized in this area are safety related, and are used to perform isolation functions. The ~~Gieger Mueller~~ detectors are mounted in the reactor building ventilation system exhaust duct (Rm 643). They are safety related, and receive their power from a dual auctioneered class 1E divisional ~~high voltage~~ power supplies of the ~~Digital ARM~~ radiation monitor *(D11-Z602A-D Div, 1-4). Each divisional ~~Digital ARM~~* radiation monitor *output voltage is hard wired to its associated detector and ~~it is~~* its voltage and current are *~~limited to 700 VDC, and 3 ma current~~. Each divisional power cable is routed separately in separate metal conduit. A fire in the room can develop a short on any detector power cable/or all the detectors power cables. A series resistor has been placed in each channel of the auctioneer power supplies, therefore, current drain on the ~~high voltage~~* power *supply will be limited and the fault will not propagate any further. A short on a power cable shall generate a down scale inop trip alarm to the ~~ARM~~* radiation monitor *control logic in the control room. The ~~ARM~~* radiation monitor *control logic requires 2 out of 4 trip to initiate isolation of the reactor building ventilation exhaust duct automatically. Although a fire could cause the system to issue an isolation signal due to its effect on the radiation detectors, the containment isolation valves can be manually reopened from the control room by the operator.*

The detectors are mounted in the fuel handling exhaust radiation monitor area (Rms 716, 721, 733 and 742 respectively). They are safety related, and receive their power from a dual auctioneered class 1E divisional power supplies of the radiation monitor *(D11-Z602A-D Div. 1-4). Each divisional* radiation monitor *output voltage is hard wired to its associated detector and* its voltage and current are *limited. Each divisional power cable is routed separately in separate metal conduit. A fire in any of the rooms can develop a short on a detector power cable. A series resistor has been placed in each channel of the auctioneered power supplies, the current drain on the* power *supply will be limited and the fault will not propagate further. A short on power cable will generate a down scale inop trip alarm to the* radiation monitor *control logic in the control room. The* radiation monitor *control logic requires 2 out of 4 trip to initiate isolation of the fuel*

handling exhaust duct automatically. Therefore loss of one or all four divisional detectors in the area due to the fire is acceptable.

The PRM channels are designed such that any two-out-of-four signals, based on very high or very low radiation conditions within the HVAC duct, will initiate the standby gas treatment system (SGTS), isolate the HVAC for the reactor building secondary containment, and initiate closure of the containment vent and purge ducts. The very low radiation trip assures the safety action will be initiated in spite of sensor failure.

The four divisions of PRM sensors are located within close proximity to each other in order to provide true two-out-of-four actuation logic. The arrangement is justified by the automatic actuation of the system's safety function should two or more sensors fail and by the fact that the secondary containment isolation valves can be reopened from the control room by the operator.

9A.5.7 Typical Circuits Analysis of Special Cases

STD DEP T1 3.4-1

STD DEP Admin

Type 2A, Thermocouple

Cables are routed in low level signal cable trays with covers or in conduit so that there are no voltage sources within the raceways which could short to the thermocouple~~s~~ leads to create overvoltage situations in the thermocouple circuits. Loss of signal is all that could occur as a result of failures in the thermocouple circuits. Transfer of voltage disturbances upstream is blocked by the millivolt readout circuits of the I/O *~~signal~~*unit *~~multiplexer~~. Tables referencing this typical circuit analysis should have a column which gives the justification for the acceptability of the loss of function of the device.*

Type 2B, Process Instrument Transmitters

Cables for transmitters for process instruments are routed in low level signal cable trays with covers or in conduit so that there are no voltage sources within the raceways which could short and create overvoltage situations in the instrument circuits. Loss of signal could occur as a result of failures in the transmitter circuits. Upscale and/or downscale trips and/or alarms are provided. The current power supply in the I/O *~~signal~~*unit *~~multiplexer~~ blocks upstream transfer of voltage and current disturbances which may occur in the cable or transmitter. Tables referencing this typical circuit analysis should have a column which gives the justification for the acceptability of the loss of function of the device.*

Type 3B, AC Solenoid Valves

The power for operating AC solenoid valves is supplied from the 120 VAC distribution system to the ~~demultiplexer~~ I/O unit *for the valve. A current limiting fuse is installed on the power feed fine to the ~~multiplexer~~* I/O unit*, so that any fault on solenoid valve is isolated and does not propagate back up into the portions of the AC distribution system common with other systems.*

Type 3C, DC Solenoid Valves

The power for operating DC solenoid valves is supplied from the DC distribution system to the ~~demultiplexer~~ I/O unit for the valve. Both the supply and return for the DC are fused ~~at the multiplexer~~ so that faults are isolated and do not propagate back up into the portions of the DC system common with other systems.

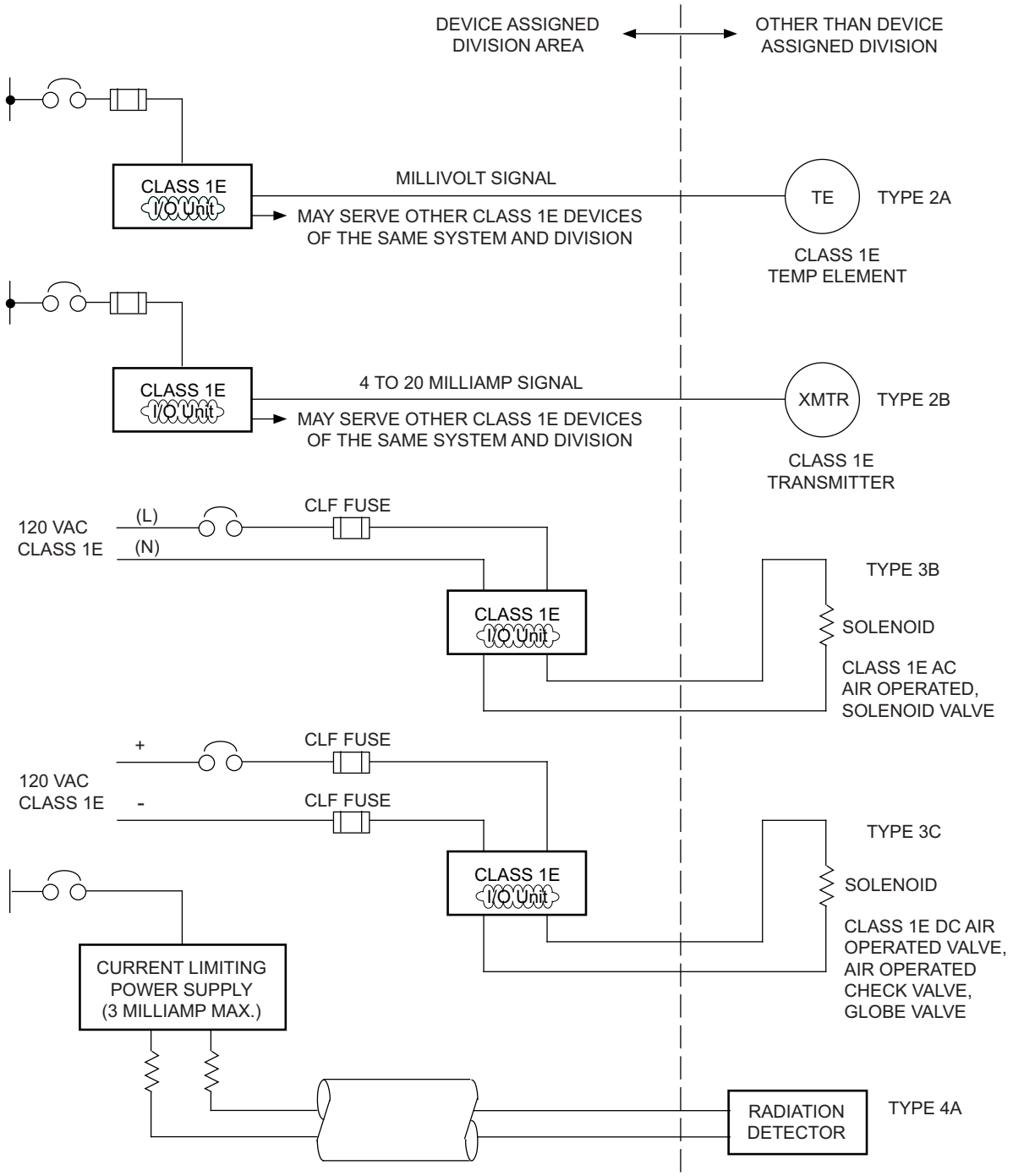

Figure 9A.5-2 Typical Electrical Equipment Connection Block Diagrams of Special Cases

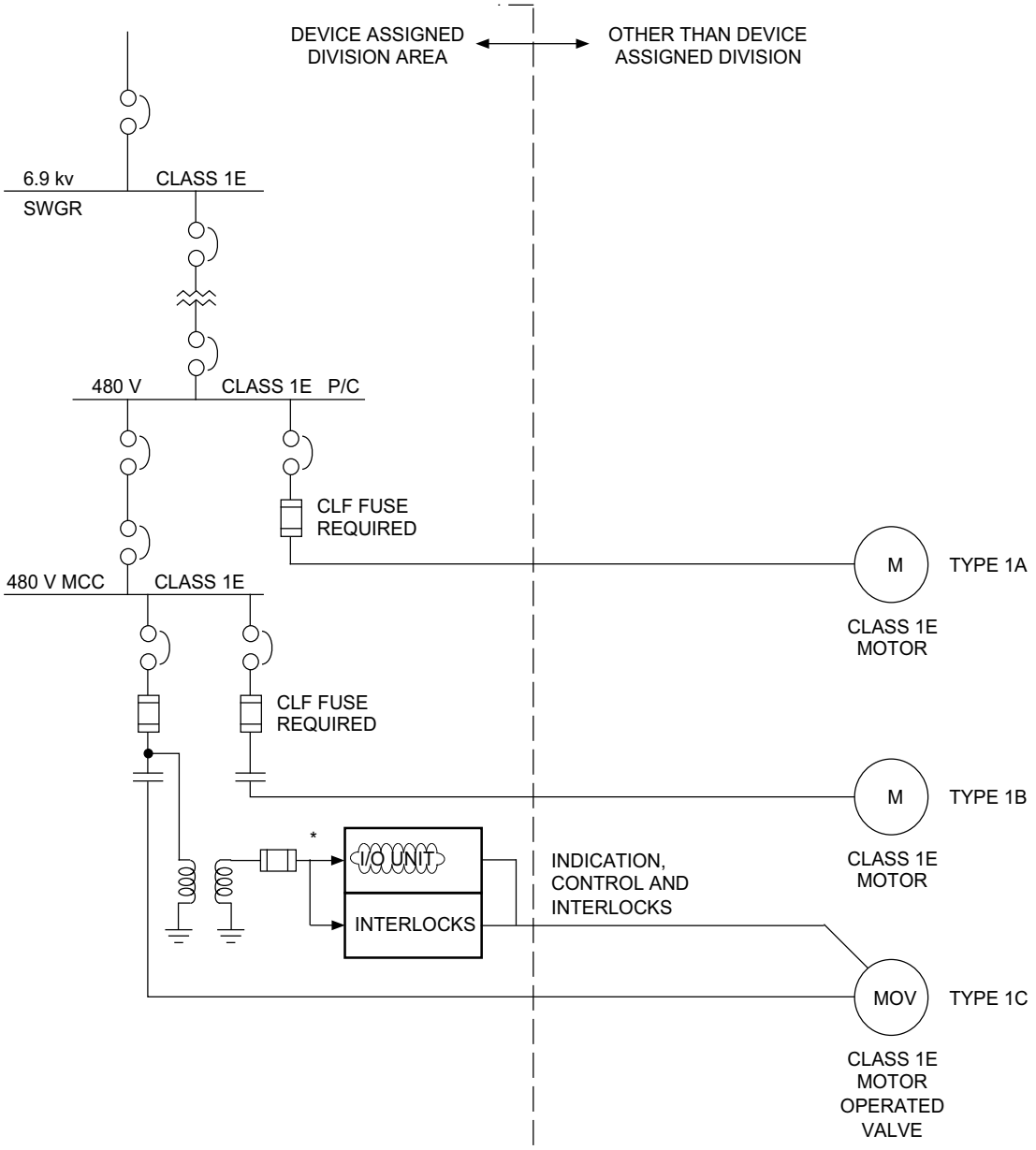

* IT IS A REQUIREMENT THAT THE INDICATION, CONTROL AND INTERLOCK POWER FOR THIS DIVISIONAL CROSS-OVER TYPE BE FROM A CONTROL POWER TRANSFORMER IN THE CUBICLE SUPPLYING POWER TO THE MOV.

Figure 9A.5-2 (Continued) Typical Electrical Equipment Connection Block Diagrams of Special Cases

9A.6 Fire Hazard Analysis Database

STD DEP T1 2.4-1 (Table (9A.6-2)

STD DEP T1 2.14-1 (Table 9A.6-2)

STD DEP T1 3.4-1

STP DEP 1.2-2 (Figures 9A.4-17 through 9A.34-21, 9A.4-33, 9A.4-34, Table 9A.6-4)

STD DEP 8.3-1

Table 9A.6-2 Fire Hazard Analysis Equipment Database Sorted by Room — Reactor Building

Item No.	MPL No	Elect Div.	Elev. Location	Location Number Coord.	Location Alpha Coord.	Description	System Drawing	Room No.
TBD	E11-F014A	1	TBD	TBD	TBD	MO GATE VALVE (FPC)	TBD	TBD
TBD	E11-F015A	1	TBD	TBD	TBD	MO GATE VALVE (FPC)	TBD	TBD
~~59~~	~~E51-C901*~~	~~1~~	~~-8200~~	~~6.3~~	~~C.9~~	~~RCIC VACUUM PUMP~~	~~103E1795/1~~	~~112~~
~~60~~	~~E51-C902*~~	~~1~~	~~-8200~~	~~6.4~~	~~C.9~~	~~RCIC CONDENSATE PUMP~~	~~103E1795/1~~	~~112~~
~~63~~	~~E51-F031~~	~~1~~	~~-8200~~	~~6.3~~	~~C.6~~	~~AO GLOBE VALVE~~	~~103E1795/1~~	~~112~~
~~64~~	~~E51-F032~~	~~1~~	~~-8200~~	~~6.3~~	~~C.6~~	~~AO GLOBE VALVE~~	~~103E1795/1~~	~~112~~
~~71~~	~~E51-LS901*~~	~~1~~	~~-8200~~	~~6.4~~	~~C.9~~	~~LEVEL SW (BARO TK)~~	~~103E1795/1~~	~~112~~
~~72~~	~~E51-LS902*~~	~~1~~	~~-8200~~	~~6.4~~	~~C.9~~	~~LEVEL SW (BARO TK)~~	~~103E1795/1~~	~~112~~
~~73~~	~~E51-PS901*~~	~~1~~	~~-8200~~	~~6.4~~	~~C.9~~	~~LEVEL SW (BARO TK)~~	~~103E1795/1~~	~~112~~
~~90~~	~~E51-F012~~	~~1~~	~~-8200~~	~~6.0~~	~~C.5~~	~~MO GLOBE VALVE (LO)~~	~~103E1795/1~~	~~112~~
~~92~~	~~E51-F045~~	~~1~~	~~-8200~~	~~6.0~~	~~C.5~~	~~MO GLOBE VALVE (STBYP)~~	~~103E1795/1~~	~~112~~
103	H23-P001*	N	-8200	5.5	A.3	~~MULTIPLEXER~~ I/O DEVICE	----?----	116
221	H23-P002*	N	-8200	4.2	F.8	~~MULTIPLEXER~~ I/O DEVICE	----?----	123
222	H23-P003*	N	-8200	4.0	F.8	~~MULTIPLEXER~~ I/O DEVICE	----?----	123
223	H23-P004*	N	-8200	3.8	F.8	~~MULTIPLEXER~~ I/O DEVICE	----?----	123
514	H23-P005*	N	-1700	5.8	B.0	~~MULTIPLEXER~~ I/O DEVICE	----?----	210
~~565~~	~~E51-F047~~	~~1~~	~~1200~~	~~5.9~~	~~C.6~~	~~MO GATE VALVE (VPDISC)~~	~~103E1795/1~~	~~212~~
593	H23-P006*	N	-1700	2.6	F.0	~~MULTIPLEXER~~ I/O DEVICE	----?----	221
594	H23-P007*	N	-1700	2.8	F.0	~~MULTIPLEXER~~ I/O DEVICE	----?----	221
~~595~~	~~T49-F006B~~	~~2~~	~~800~~	~~2.8~~	~~E.5~~	~~MO GATE VALVE~~	~~107E6047/0~~	~~221~~
~~596~~	~~T49-F007B~~	~~2~~	~~800~~	~~2.8~~	~~E.5~~	~~AO GATE VALVE~~	~~107E6047/0~~	~~221~~
~~597~~	~~T49-F007B-1~~	~~1~~	~~800~~	~~2.8~~	~~E.5~~	~~SOLENOID VALVE~~	~~107E6047/0~~	~~221~~
~~598~~	~~T49-F007B-2~~	~~4~~	~~800~~	~~2.8~~	~~E.5~~	~~SOLENOID VALVE~~	~~107E6047/0~~	~~221~~
~~599~~	~~X-242~~	~~2~~	~~800~~	~~2.7~~	~~E.5~~	~~FCS RETURN~~	~~NT-1006643~~	~~221~~
~~639~~	~~T49-F006C~~	~~3~~	~~800~~	~~5.8~~	~~D.5~~	~~MO GATE VALVE~~	~~107E6047/0~~	~~230~~
~~640~~	~~T49-F007A-1~~	~~1~~	~~800~~	~~5.8~~	~~D.5~~	~~SOLENOID VALVE~~	~~107E6047/0~~	~~230~~
~~641~~	~~T49-F007A-2~~	~~4~~	~~800~~	~~5.8~~	~~D.5~~	~~SOLENOID VALVE~~	~~107E6047/0~~	~~230~~
~~642~~	~~T49-F007C~~	~~3~~	~~800~~	~~5.8~~	~~D.5~~	~~AO GATE VALVE~~	~~107E6047/0~~	~~230~~
1277	H23-P008*	1	4800	2.4	A.3	~~MULTIPLEXER~~ I/O DEVICE	----?----	310

Table 9A.6-2 Fire Hazard Analysis Equipment Database Sorted by Room — Reactor Building (Continued)

Item No.	MPL No	Elect Div.	Elev. Location	Location Number Coord.	Location Alpha Coord.	Description	System Drawing	Room No.
1278	H23-P009*	1	4800	2.2	A.3	~~MULTIPLEXER~~ I/O DEVICE	----?----	310
1279	H23-P010*	1	4800	2.1	A.3	~~MULTIPLEXER~~ I/O DEVICE	----?----	310
1280	H23-P012*	1	4800	2.1	A.1	~~MULTIPLEXER~~ I/O DEVICE	----?----	310
1281	H23-P013*	1	4800	2.3	A.1	~~MULTIPLEXER~~ I/O DEVICE	----?----	310

Table 9A.6-2 Fire Hazard Analysis Equipment Database Sorted by Room — Reactor Building (Continued)

~~Item No.~~	~~MPL No~~	~~Elect Div.~~	~~Elev. Location~~	~~Location Number Coord.~~	~~Location Alpha Coord.~~	~~Description~~	~~System Drawing~~	~~Room No.~~
~~1288~~	~~X-215~~	~~1~~	~~5800~~	~~5.7~~	~~C.0~~	~~RCIC VAC PUMP EXHAUST~~	~~795E883/4~~	~~313~~
1353	H23-P021*	N	4800	1.9	F.9	~~MULTIPLEXER~~ I/O DEVICE	----?----	320
1369	H23-P022*	N	4800	2.8	F.0	~~MULTIPLEXER~~ I/O DEVICE	----?----	321
1372	H23-P023*	N	4800	3.8	F.0	~~MULTIPLEXER~~ I/O DEVICE	----?----	321
1420	H23-P014*	2	4800	2.4	F.6	~~MULTIPLEXER~~ I/O DEVICE	----?----	326
1423	H23-P015*	2	4800	2.6	F.5	~~MULTIPLEXER~~ I/O DEVICE	----?----	326
1424	H23-P016*	2	4800	2.6	F.3	~~MULTIPLEXER~~ I/O DEVICE	----?----	326
1425	H23-P017*	2	4800	2.6	F.2	~~MULTIPLEXER~~ I/O DEVICE	----?----	326
1433	H23-P018*	2	4800	4.3	F.9	~~MULTIPLEXER~~ I/O DEVICE	----?----	326
1483	H23-P025*	N	4800	5.6	E.3	~~MULTIPLEXER~~ I/O DEVICE	----?----	335
1486	H23-P024*	N	4800	4.8	F.0	~~MULTIPLEXER~~ I/O DEVICE	----?----	335
1490	H23-P019*	3	4800	5.0	F.1	~~MULTIPLEXER~~ I/O DEVICE	----?----	337
1491	H23-P020*	3	4800	5.2	F.1	~~MULTIPLEXER~~ I/O DEVICE	----?----	337
1617	H23-P011*	4	4800	1.7	A.1	~~MULTIPLEXER~~ I/O DEVICE	----?----	381
1655	H23-P026*	N	12300	5.7	B.2	~~MULTIPLEXER~~ I/O DEVICE	----?----	410
~~1761~~	~~T49-A001B~~	~~2~~	~~12300~~	~~3.1~~	~~F.7~~	~~RECOMBINER~~	~~107E6047/0~~	~~425~~
~~1762~~	~~T49-B001B~~	~~2~~	~~12300~~	~~3.1~~	~~F.7~~	~~SPRAY COOLER~~	~~107E6047/0~~	~~425~~
~~1763~~	~~T49-C001B~~	~~2~~	~~12300~~	~~3.1~~	~~F.7~~	~~BLOWER~~	~~107E6047/0~~	~~425~~
~~1764~~	~~T49-D001B~~	~~2~~	~~12300~~	~~3.1~~	~~F.7~~	~~WATER SEPARATOR~~	~~107E6047/0~~	~~425~~
~~1765~~	~~T49-D002B*~~	~~2~~	~~12300~~	~~3.1~~	~~F.7~~	~~RECOMB HEATER~~	~~107E6047/0~~	~~425~~
~~1766~~	~~T49-F003B~~	~~2~~	~~12300~~	~~3.1~~	~~F.7~~	~~MO GLOBE VALVE~~	~~107E6047/0~~	~~425~~
~~1767~~	~~T49-F004B~~	~~2~~	~~12300~~	~~3.1~~	~~F.7~~	~~MO GLOBE VALVE~~	~~107E6047/0~~	~~425~~
~~1768~~	~~T49-F008B~~	~~2~~	~~12300~~	~~3.1~~	~~F.7~~	~~MO GLOBE VALVE~~	~~107E6047/0~~	~~425~~
~~1769~~	~~T49-F009B~~	~~2~~	~~12300~~	~~3.1~~	~~F.7~~	~~MAN OPER GLOBE VALVE~~	~~107E6047/0~~	~~425~~
~~1770~~	~~T49-F010B~~	~~2~~	~~12300~~	~~3.1~~	~~F.7~~	~~MO GLOBE VALVE~~	~~107E6047/0~~	~~425~~
~~1771~~	~~T49-F013B~~	~~2~~	~~12300~~	~~3.1~~	~~F.7~~	~~MAN OPER GATE VALVE~~	~~107E6047/0~~	~~425~~
~~1772~~	~~T49-F014B~~	~~2~~	~~12300~~	~~3.1~~	~~F.7~~	~~MAN OPER GATE VALVE~~	~~107E6047/0~~	~~425~~
~~1773~~	~~T49-F016B~~	~~2~~	~~12300~~	~~3.1~~	~~F.7~~	~~MAN OPER GATE VALVE~~	~~107E6047/0~~	~~425~~
~~1774~~	~~T49-FT002B~~	~~2~~	~~12300~~	~~3.1~~	~~F.7~~	~~FLOW TRANSMITTER~~	~~107E6047/0~~	~~425~~
~~1775~~	~~T49-FT004B~~	~~2~~	~~12300~~	~~3.1~~	~~F.7~~	~~FLOW TRANSMITTER~~	~~107E6047/0~~	~~425~~
~~1776~~	~~T49-LS011B~~	~~2~~	~~12300~~	~~3.1~~	~~F.7~~	~~LEVEL SWITCH~~	~~107E6047/0~~	~~425~~
~~1777~~	~~T49-LS012B~~	~~2~~	~~12300~~	~~3.1~~	~~F.7~~	~~LEVEL SWITCH~~	~~107E6047/0~~	~~425~~
~~1778~~	~~T49-LS013B~~	~~2~~	~~12300~~	~~3.1~~	~~F.7~~	~~LEVEL SWITCH~~	~~107E6047/0~~	~~425~~
~~1779~~	~~T49-PT003B~~	~~2~~	~~12300~~	~~3.1~~	~~F.7~~	~~PRESS TRANSMITTER~~	~~107E6047/0~~	~~425~~

Table 9A.6-2 Fire Hazard Analysis Equipment Database Sorted by Room — Reactor Building (Continued)

~~Item No.~~	~~MPL No~~	~~Elect Div.~~	~~Elev. Location~~	~~Location Number Coord.~~	~~Location Alpha Coord.~~	~~Description~~	~~System Drawing~~	~~Room No.~~
~~1780~~	~~T49-TE001B~~	~~2~~	~~12300~~	~~3.1~~	~~F.7~~	~~TEMP ELEMENT~~	~~107E6047/0~~	~~425~~
~~1781~~	~~T49-TE005B~~	~~2~~	~~12300~~	~~3.1~~	~~F.7~~	~~TEMP ELEMENT~~	~~107E6047/0~~	~~425~~
~~1782~~	~~T49-TE006B-1~~	~~2~~	~~12300~~	~~3.1~~	~~F.7~~	~~TEMP ELEMENT~~	~~107E6047/0~~	~~425~~
~~1783~~	~~T49-TE006B-2~~	~~2~~	~~12300~~	~~3.1~~	~~F.7~~	~~TEMP ELEMENT~~	~~107E6047/0~~	~~425~~
~~1784~~	~~T49-TE007B-1~~	~~2~~	~~12300~~	~~3.1~~	~~F.7~~	~~TEMP ELEMENT~~	~~107E6047/0~~	~~425~~
~~1785~~	~~T49-TE007B-2~~	~~2~~	~~12300~~	~~3.1~~	~~F.7~~	~~TEMP ELEMENT~~	~~107E6047/0~~	~~425~~
~~1786~~	~~T49-TE008B-1~~	~~2~~	~~12300~~	~~3.1~~	~~F.7~~	~~TEMP ELEMENT~~	~~107E6047/0~~	~~425~~
~~1787~~	~~T49-TE008B-2~~	~~2~~	~~12300~~	~~3.1~~	~~F.7~~	~~TEMP ELEMENT~~	~~107E6047/0~~	~~425~~
~~1788~~	~~T49-TE009B-1~~	~~2~~	~~12300~~	~~3.1~~	~~F.7~~	~~TEMP ELEMENT~~	~~107E6047/0~~	~~425~~
~~1789~~	~~T49-TE009B-2~~	~~2~~	~~12300~~	~~3.1~~	~~F.7~~	~~TEMP ELEMENT~~	~~107E6047/0~~	~~425~~
~~1790~~	~~T49-TE010B-1~~	~~2~~	~~12300~~	~~3.1~~	~~F.7~~	~~TEMP ELEMENT~~	~~107E6047/0~~	~~425~~
~~1791~~	~~T49-TE010B-2~~	~~2~~	~~12300~~	~~3.1~~	~~F.7~~	~~TEMP ELEMENT~~	~~107E6047/0~~	~~425~~
~~1792~~	~~T49-TE011B~~	~~2~~	~~12300~~	~~3.1~~	~~F.7~~	~~TEMP ELEMENT~~	~~107E6047/0~~	~~425~~
~~1793~~	~~T49-TT609B~~	~~2~~	~~12300~~	~~3.1~~	~~F.7~~	~~TEMP TRANSMITTER~~	~~107E6047/0~~	~~425~~
~~1794~~	~~U41-D108~~	~~2~~	~~12300~~	~~2.7~~	~~F.5~~	~~FCS ROOM (B) HVH~~	~~107E5189/0~~	~~425~~
~~1831~~	~~T49-A001A~~	~~3~~	~~12300~~	~~4.0~~	~~F.7~~	~~RECOMBINER~~	~~107E6047/0~~	~~436~~
~~1832~~	~~T49-B001A~~	~~3~~	~~12300~~	~~4.0~~	~~F.7~~	~~SPRAY COOLER~~	~~107E6047/0~~	~~436~~
~~1833~~	~~T49-C001A~~	~~3~~	~~12300~~	~~4.0~~	~~F.7~~	~~BLOWER~~	~~107E6047/0~~	~~436~~
~~1834~~	~~T49-D001A~~	~~3~~	~~12300~~	~~4.0~~	~~F.7~~	~~WATER SEPARATOR~~	~~107E6047/0~~	~~436~~
~~1835~~	~~T49-D002A*~~	~~3~~	~~12300~~	~~4.0~~	~~F.7~~	~~RECOMB HEATER~~	~~107E6047/0~~	~~436~~
~~1836~~	~~T49-F003A~~	~~3~~	~~12300~~	~~4.0~~	~~F.7~~	~~MO GLOBE VALVE~~	~~107E6047/0~~	~~436~~
~~1837~~	~~T49-F004A~~	~~3~~	~~12300~~	~~4.0~~	~~F.7~~	~~MO GLOBE VALVE~~	~~107E6047/0~~	~~436~~
~~1838~~	~~T49-F008A~~	~~3~~	~~12300~~	~~4.0~~	~~F.7~~	~~MO GLOBE VALVE~~	~~107E6047/0~~	~~436~~
~~1839~~	~~T49-F009A~~	~~3~~	~~12300~~	~~4.0~~	~~F.7~~	~~MAN OPER GLOBE VALVE~~	~~107E6047/0~~	~~436~~
~~1840~~	~~T49-F010A~~	~~3~~	~~12300~~	~~4.0~~	~~F.7~~	~~MO GLOBE VALVE~~	~~107E6047/0~~	~~436~~
~~1841~~	~~T49-F013A~~	~~3~~	~~12300~~	~~4.0~~	~~F.7~~	~~MAN OPER GATE VALVE~~	~~107E6047/0~~	~~436~~
~~1842~~	~~T49-F014A~~	~~3~~	~~12300~~	~~4.0~~	~~F.7~~	~~MAN OPER GATE VALVE~~	~~107E6047/0~~	~~436~~
~~1843~~	~~T49-F016A~~	~~3~~	~~12300~~	~~4.0~~	~~F.7~~	~~MAN OPER GATE VALVE~~	~~107E6047/0~~	~~436~~
~~1844~~	~~T49-FT002A~~	~~3~~	~~12300~~	~~4.0~~	~~F.7~~	~~FLOW TRANSMITTER~~	~~107E6047/0~~	~~436~~
~~1845~~	~~T49-FT004A~~	~~3~~	~~12300~~	~~4.0~~	~~F.7~~	~~FLOW TRANSMITTER~~	~~107E6047/0~~	~~436~~
~~1846~~	~~T49-LS011A~~	~~3~~	~~12300~~	~~4.0~~	~~F.7~~	~~LEVEL SWITCH~~	~~107E6047/0~~	~~436~~
~~1847~~	~~T49-LS012A~~	~~3~~	~~12300~~	~~4.0~~	~~F.7~~	~~LEVEL SWITCH~~	~~107E6047/0~~	~~436~~
~~1848~~	~~T49-LS013A~~	~~3~~	~~12300~~	~~4.0~~	~~F.7~~	~~LEVEL SWITCH~~	~~107E6047/0~~	~~436~~

Table 9A.6-2 Fire Hazard Analysis Equipment Database Sorted by Room — Reactor Building (Continued)

~~Item No.~~	~~MPL No~~	~~Elect Div.~~	~~Elev. Location~~	~~Location Number Coord.~~	~~Location Alpha Coord.~~	~~Description~~	~~System Drawing~~	~~Room No.~~
~~1849~~	~~T49-PT003A~~	~~3~~	~~12300~~	~~4.0~~	~~F.7~~	~~PRESS TRANSMITTER~~	~~107E6047/0~~	~~436~~
~~1850~~	~~T49-TE001A~~	~~3~~	~~12300~~	~~4.0~~	~~F.7~~	~~TEMP ELEMENT~~	~~107E6047/0~~	~~436~~
~~1851~~	~~T49-TE005A~~	~~3~~	~~12300~~	~~4.0~~	~~F.7~~	~~TEMP ELEMENT~~	~~107E6047/0~~	~~436~~
~~1852~~	~~T49-TE006A-1~~	~~3~~	~~12300~~	~~4.0~~	~~F.7~~	~~TEMP ELEMENT~~	~~107E6047/0~~	~~436~~
~~1853~~	~~T49-TE006A-2~~	~~3~~	~~12300~~	~~4.0~~	~~F.7~~	~~TEMP ELEMENT~~	~~107E6047/0~~	~~436~~
~~1854~~	~~T49-TE007A-1~~	~~3~~	~~12300~~	~~4.0~~	~~F.7~~	~~TEMP ELEMENT~~	~~107E6047/0~~	~~436~~
~~1855~~	~~T49-TE007A-2~~	~~3~~	~~12300~~	~~4.0~~	~~F.7~~	~~TEMP ELEMENT~~	~~107E6047/0~~	~~436~~
~~1856~~	~~T49-TE008A-1~~	~~3~~	~~12300~~	~~4.0~~	~~F.7~~	~~TEMP ELEMENT~~	~~107E6047/0~~	~~436~~
~~1857~~	~~T49-TE008A-2~~	~~3~~	~~12300~~	~~4.0~~	~~F.7~~	~~TEMP ELEMENT~~	~~107E6047/0~~	~~436~~
~~1858~~	~~T49-TE009A-1~~	~~3~~	~~12300~~	~~4.0~~	~~F.7~~	~~TEMP ELEMENT~~	~~107E6047/0~~	~~436~~
~~1859~~	~~T49-TE009A-2~~	~~3~~	~~12300~~	~~4.0~~	~~F.7~~	~~TEMP ELEMENT~~	~~107E6047/0~~	~~436~~
~~1860~~	~~T49-TE010A-1~~	~~3~~	~~12300~~	~~4.0~~	~~F.7~~	~~TEMP ELEMENT~~	~~107E6047/0~~	~~436~~
~~1861~~	~~T49-TE010A-2~~	~~3~~	~~12300~~	~~4.0~~	~~F.7~~	~~TEMP ELEMENT~~	~~107E6047/0~~	~~436~~
~~1862~~	~~T49-TE011A~~	~~3~~	~~12300~~	~~4.0~~	~~F.7~~	~~TEMP ELEMENT~~	~~107E6047/0~~	~~436~~
~~1863~~	~~T49-TT609A~~	~~3~~	~~12300~~	~~4.0~~	~~F.7~~	~~TEMP TRANSMITTER~~	~~107E6047/0~~	~~436~~
~~1864~~	~~U41-D107~~	~~3~~	~~12300~~	~~4.6~~	~~F.9~~	~~FCS ROOM (C) HVH~~	~~107E5189/0~~	~~436~~
~~2222~~	~~T49-F001C~~		~~20100~~	~~2.7~~	~~E.4~~	~~MO GATE VALVE~~	~~107E6047/0~~	~~521~~
~~2223~~	~~T49-F002B~~		~~20100~~	~~2.7~~	~~E.4~~	~~AO GATE VALVE~~	~~107E6047/0~~	~~521~~
~~2224~~	~~T49-F002B-1~~		~~20100~~	~~2.7~~	~~E.4~~	~~SOLENOID VALVE~~	~~107E6047/0~~	~~521~~
~~2225~~	~~T49-F002B-2~~		~~20100~~	~~2.7~~	~~E.4~~	~~SOLENOID VALVE~~	~~107E6047/0~~	~~521~~
~~2227~~	~~X-082~~	~~2~~	~~20100~~	~~2.7~~	~~E.4~~	~~FCS INTAKE~~	~~NT-1006643~~	~~521~~
~~2247~~	~~T49-F001B~~		~~20100~~	~~5.7~~	~~D.8~~	~~MO GATE VALVE~~	~~107E6047/0~~	~~530~~
~~2248~~	~~T49-F002C~~		~~20100~~	~~5.7~~	~~D.8~~	~~AO GATE VALVE~~	~~107E6047/0~~	~~530~~
~~2249~~	~~T49-F002C-1~~		~~20100~~	~~5.7~~	~~D.8~~	~~SOLENOID VALVE~~	~~107E6047/0~~	~~530~~
~~2250~~	~~T49-F002C-2~~		~~20100~~	~~5.7~~	~~D.8~~	~~SOLENOID VALVE~~	~~107E6047/0~~	~~530~~
2301	H23-P027*	N	18100	1.9	B.2	~~MULTIPLEXER~~ I/O DEVICE	----?----	547
2302	H23-P028*	N	18100	1.9	B.3	~~MULTIPLEXER~~ I/O DEVICE	----?----	547
~~2471~~	~~R23-P/C-EN110A~~	~~N1~~	~~23500~~	~~1.5~~	~~A.5~~	~~P/C EN110A - LO VOLT SWTGR~~	~~107E5072/0~~	~~640~~
~~2472~~	~~R23-P/C-EN110B~~	~~N2~~	~~23500~~	~~1.2~~	~~A.5~~	~~P/C EN110A - LO VOLT SWTGR~~	~~107E5072/0~~	~~640~~
~~2473~~	~~R23-P/C-EN110C~~	~~N3~~	~~23500~~	~~1.2~~	~~A.2~~	~~P/C EN110C - LO VOLT SWTGR~~	~~107E5072/0~~	~~640~~

Table 9A.6-2 Fire Hazard Analysis Equipment Database Sorted by Room — Reactor Building (Continued)

~~Item No.~~	~~MPL No~~	~~Elect Div.~~	~~Elev. Location~~	~~Location Number Coord.~~	~~Location Alpha Coord.~~	~~Description~~	~~System Drawing~~	~~Room No.~~
~~2475~~	~~R24 MCC EN110A~~	~~N1~~	~~23500~~	~~1.3~~	~~B.5~~	~~MCC EN110A - R/B~~	~~107E5072/0~~	~~640~~
~~2475a~~	~~R24 MCC EN110B~~	~~N2~~	~~23500~~	~~1.3~~	~~B.6~~	~~MCC EN110B - R/B~~	~~107E5072/0~~	~~640~~
~~2476~~	~~R24 MCC EN110C~~	~~N3~~	~~23500~~	~~1.3~~	~~B.7~~	~~MCC EN110C - R/B~~	~~107E5072/0~~	~~640~~
2477	H23-P029*	N	23500	1.9	C.3	~~MULTIPLEXER~~ I/O DEVICE	----?----	640
2478	H23-P030*	N	23500	1.9	C.5	~~MULTIPLEXER~~ I/O DEVICE	----?----	640
2479	H23-P031*	N	23500	1.9	C.7	~~MULTIPLEXER~~ I/O DEVICE	----?----	640
2774	H23-P032*	N	31700	6.2	E.4	~~MULTIPLEXER~~ I/O DEVICE	----?----	715
2775	H23-P033*	N	31700	6.2	E.5	~~MULTIPLEXER~~ I/O DEVICE	----?----	715
2776	H23-P034*	N	31700	6.2	E.7	~~MULTIPLEXER~~ I/O DEVICE	----?----	715

Table 9A.6-3 Fire Hazard Analysis Equipment Data Base — Sorted by Room — Control Building

ITEM NO.	MPL NO.	ELECT DIV.	ELEV. LOCATION	LOCATION NUMBER COORD.	LOCATION ALPHA COORD.	DESCRIPTION	SYSTEM DRAWING	ROOM NO.
~~169~~	~~C81-D001A*~~	~~N~~	~~12300~~	~~2.50~~	~~J.3~~	~~RIP MG SET A~~	~~107E5072~~	~~501~~
~~170~~	~~U41-D132A~~	~~N~~	~~12300~~	~~1.80~~	~~J.4~~	~~MG SET ROOM FCU A~~	~~107E5189/0~~	~~501~~
~~171~~	~~C81-P001A~~	~~N~~	~~12300~~	~~2.50~~	~~J.7~~	~~RIP MG A CONTROL PNL~~	~~---?---~~	~~502~~
~~172~~	~~C81-D001B*~~	~~N~~	~~12300~~	~~2.50~~	~~K.1~~	~~RIP MG SET B~~	~~107E5072~~	~~503~~
~~173~~	~~U41-D132B~~	~~N~~	~~12300~~	~~1.80~~	~~K.4~~	~~MG SET ROOM FCU B~~	~~107E5189/0~~	~~503~~
~~174~~	~~C81-P001B~~	~~N~~	~~12300~~	~~2.50~~	~~K.4~~	~~RIP MG B CONTROL PNL~~	~~---?---~~	~~504~~

Table 9A.6-4 Fire Hazard Analysis Equipment Database Sorted by Room - Turbine Building

WBS	Elec Div.	Elev Loc.	Loc No. Coord	Loc Alpha Coord	Description	Room No.
K11	N	2300	7.8	B.2	LCW SUMP (A)	110
K11	N	2300	7.8	B.8	HCW SUMP (A)	110
K11	N	2300	7.2	B.2	SD SUMP (A)	110
P52	N	6300	10.4	C.7	INSTRUMENT AIR COMPRESSOR (A)	111
P52	N	6300	10.4	D.3	INSTRUMENT AIR COMPRESSOR (B)	111
P52	N	6300	10.4	C.4	INSTRUMENT AIR RECEIVER TANK	111
P52	N	6300	10.5	B.3	INSTRUMENT AIR DRYER PACKAGE UNIT (A)	111
P52	N	6300	10.5	B.7	INSTRUMENT AIR DRYER PACKAGE UNIT (B)	111
P51	N	6300	10.4	E.0	STATION AIR COMPRESSOR (A)	111
P51	N	6300	10.4	E.5	STATION AIR COMPRESSOR (B)	111
P51	N	6300	10.5	D.7	STATION AIR RECEIVER TANK	111
U41	N	6300	10.5	E.9	IA&SA ROOM L/C	111
N62	N	2300	2.3	C.2	OG CHARCOAL ABSORBER	112
N62	N	2300	2.3	C.5	OG CHARCOAL ABSORBER	112
N62	N	2300	2.7	C.2	OG CHARCOAL ABSORBER	112
N62	N	2300	2.7	C.5	OG CHARCOAL ABSORBER	112
N22	N	2300	7.5	G.7	HIGH PRESSURE HEATER DRAIN PUMP (A)	113
N22	N	2300	7.5	G.4	HIGH PRESSURE HEATER DRAIN PUMP (B)	113
N22	N	2300	7.5	F.7	HIGH PRESSURE HEATER DRAIN PUMP (C)	113
N22	N	2300	7.5	F.4	HIGH PRESSURE HEATER DRAIN PUMP (D)	113
N61	N	2300	4.0	F.5	CONDENSER (A)	120
N61	N	2300	4.0	E.5	CONDENSER (B)	120
N61	N	2300	4.0	D.5	CONDENSER (C)	120
N22	N	2300	2.3	F.0	1ST FEED WATER HEATER DRAIN COOLER (A)	120
N22	N	2300	3.8	E.6	1ST FEED WATER HEATER DRAIN COOLER (B)	120
N22	N	2300	2.3	D.7	1ST FEED WATER HEATER DRAIN COOLER (C)	120
N71	N	2300	3.2	B.9	CW SUMP	121
N21	N	2300	8.5	H.6	CONDENSATE WATER RECOVERY TANK	131
N21	N	2300	6.4	A.4	HIGH PRESSURE CONDENSATE PUMP (A)	132
N21	N	2300	5.5	A.4	HIGH PRESSURE CONDENSATE PUMP (B)	132
N21	N	2300	4.9	A.4	HIGH PRESSURE CONDENSATE PUMP (C)	132
N21	N	2300	3.9	A.4	HIGH PRESSURE CONDENSATE PUMP (D)	132
N21	N	2300	7.7	E.8	LOW PRESSURE CONDENSATE PUMP (A)	140

Table 9A.6-4 Fire Hazard Analysis Equipment Database Sorted by Room - Turbine Building (Continued)

WBS	Elec Div.	Elev Loc.	Loc No. Coord	Loc Alpha Coord	Description	Room No.
N21	N	2300	7.7	E.5	LOW PRESSURE CONDENSATE PUMP (B)	140
N21	N	2300	7.7	E.2	LOW PRESSURE CONDENSATE PUMP (C)	140
N21	N	2300	7.7	D.8	LOW PRESSURE CONDENSATE PUMP (D)	140
N21	N	2300	7.8	D.5	CAND WATER COLLECTING PUMP	140
K11	N	2300	3.6	G.8	LCW SUMP (B)	142
K11	N	2300	3.2	G.8	HCW SUMP (B)	142
K11	N	2300	3.2	G.3	SD SUMP (B)	142
K21	N	2300	7.4	C.2	CF BACKWASH TRANSFER TANK	143
K21	N	2300	7.2	C.8	CF BACKWASH TRANSFER PUMP (A)	144
K21	N	2300	7.6	C.8	CF BACKWASH TRANSFER PUMP (B)	144
N27	N	2300	6.4	B.2	DRAIN STRAINER	1X1
N27	N	2300	6.5	B.5	RESIN STORAGE TANK	1X1
N27	N	2300	6.5	B.8	RESIN STORAGE TANK	1X1
H22	N	2300	5.8	B.4	LOCAL RACK	1X2
H22	N	2300	5.8	B.6	LOCAL RACK	1X2
H22	N	2300	4.2	B.2	LOCAL RACK	1X2
H22	N	2300	4.5	B.1	LOCAL RACK	1X2
H22	N	2300	4.8	B.4	LOCAL RACK	1X2
H22	N	2300	4.8	B.6	LOCAL RACK	1X2
H22	N	2300	4.5	B.8	LOCAL RACK	1X2
H22	N	2300	4.2	C.1	LOCAL RACK	1X2
C81	N	2300	6.8	B.4	CD RECIRCULATION PUMP	1X3
H21	N	2300	5.3	B.1	LOCAL PANEL	1X3
H21	N	2300	5.4	B.1	LOCAL PANEL	1X3
H21	N	2300	5.6	B.1	LOCAL PANEL	1X3
H21	N	2300	5.8	B.1	LOCAL PANEL	1X3
N34	N	6300	3.6	H.3	OILSTORAGE TANK (A)	1Y1
N34	N	6300	3.6	H.7	OILSTORAGE TANK (B)	1Y1
N34	N	6300	3.8	H.5	OIL TRANSFER PUMP	1Y1
H22	N	6300	3.8	H.6	LOCAL RACK	1Y1
P81	N	6300	10.4	G.9	BREATHING AIR COMPRESSOR AREA	1Y2
R24	N	6300	8.7	B.4	Non-1E MCC SA130	1Y3
R24	N	6300	8.7	C.1	Non-1E MCC SA131	1Y3
R24	N	6300	8.7	D.6	Non-1E MCC SA132	1Y3

Table 9A.6-4 Fire Hazard Analysis Equipment Database Sorted by Room - Turbine Building (Continued)

WBS	Elec Div.	Elev Loc.	Loc No. Coord	Loc Alpha Coord	Description	Room No.
R24	N	6300	8.7	E.1	Non-1E MCC SA133	1Y3
R24	N	6300	8.7	E.5	Non-1E MCC SB130	1Y3
R24	N	6300	7.1	C.6	Non-1E MCC SB131	1Y3
R24	N	6300	7.6	C.6	Non-1E MCC SB132	1Y3
R24	N	6300	7.4	D.4	Non-1E MCC SB133	1Y3
R24	N	6300	8.7	G.2	Non-1E MCC SC130	1Y3
R24	N	6300	8.7	G.6	Non-1E MCC SC132	1Y3
H22	N	6300	4.2	B.8	LOCAL RACK	1Y4
H22	N	6300	4.5	B.8	LOCAL RACK	1Y4
R22	N	12300	10.2	H.5	Non-1E M/C A1	210
R22	N	12300	10.5	H.5	Non-1E M/C C1	210
R22	N	12300	10.2	G.3	Non-1E M/C B1	210
R22	N	12300	10.6	G.3	Non-1E M/C D1	210
R22	N	12300	10.9	H.4	Non-1E M/C A2-4-5	210
R22	N	12300	9.4	H.4	Non-1E M/C B2-4-5	210
R22	N	12300	9.6	H.4	Non-1E M/C C2-4-5	210
N62	N	12300	2.7	B.9	OG FILTER	211
N62	N	12300	2.3	B.8	GUARD BED	211
N21	N	12300	6.6	H.5	MD-RFP (A)	213
N21	N	12300	6.6	G.5	MD-RFP (B)	213
R22	N	12300	6.6	H.5	M/D RFP Motor A	213
R22	N	12300	6.6	G.5	M/D RFP Motor B	213
U41	N	12300	7.2	G.2	CONDENSER ROOM L/C (A)	213
U41	N	12300	7.7	G.2	CONDENSER ROOM L/C (B)	213
R22	N	12300	7.7	J.5	M/D RFP ASD (A)	214
R22	N	12300	4.2	J.5	M/D RFP ASD (B)	214
R22	N	6300	7.7	J.5	MD RFP ASD (C)	214-2
R22	N	6300	4.2	J.5	MD RFP ASD (D)	214-2
N21	N	12300	3.6	H.5	MD-RFP (C)	215
N21	N	12300	3.6	G.5	MD-RFP (D)	215
R22	N	12300	3.6	H.5	M/D RFP Motor C	215
R22	N	12300	3.6	G.5	M/D RFP Motor D	215
N26	N	6300	5.5	C.0	BACKWASH AIR TANK	221
N26	N	6300	5.5	B.6	PRE-AIR FILTER VESSEL	221

Table 9A.6-4 Fire Hazard Analysis Equipment Database Sorted by Room - Turbine Building (Continued)

WBS	Elec Div.	Elev Loc.	Loc No. Coord	Loc Alpha Coord	Description	Room No.
N26	N	6300	5.9	B.7	AIR FILTER VESSEL	221
H22	N	6300	5.9	B.4	LOCAL RACK	221
H22	N	6300	5.9	B.6	LOCAL RACK	221
H22	N	6300	4.0	B.6	LOCAL RACK	221
H22	N	6300	4.4	B.1	LOCAL RACK	221
H22	N	6300	4.6	B.1	LOCAL RACK	221
H22	N	6300	4.9	B.2	LOCAL RACK	221
H22	N	6300	4.9	B.4	LOCAL RACK	221
H22	N	6300	3.0	B.5	LOCAL RACK	221
P22	N	2300	7.4	J.0	TCW PUMP (A)	224
P22	N	2300	7.7	J.0	TCW PUMP (B)	224
P22	N	2300	6.3	J.0	TCW PUMP (C)	224
P22	N	2300	5.9	H.5	TCW HEAT EXCHANGER (A)	224
P22	N	2300	5.9	H.8	TCW HEAT EXCHANGER (B)	224
P22	N	2300	5.9	J.4	TCW HEAT EXCHANGER (C)	224
K11	N	2300	7.1	H.4	NRD SUMP	224
N34	N	6300	7.5	H.3	OIL PURIFICATION UNIT	230
N34	N	6300	7.8	H.3	OIL FLUSHING FILTER UNIT	230
N32	N	6300	4.2	H.5	EHC HYDRAULIC POWER UNIT	232
H22	N	6300	4.7	H.5	LOCAL RACK	232
R24	N	12300	8.7	B.5	Non-1E MCC A330	240
R24	N	12300	8.7	C.2	Non-1E MCC A331	240
R24	N	12300	8.7	D.9	Non-1E MCC B330	240
R24	N	12300	8.7	E.4	Non-1E MCC B331	240
R24	N	12300	8.7	E.6	Non-1E MCC C330	240
R24	N	12300	8.7	F.5	Non-1E MCC C331	240
R24	N	12300	8.7	F.9	Non-1E MCC C332	240
N26	N	12300	7.3	B.7	CF FILTER VESSEL (A)	241
N26	N	12300	7.6	B.7	CF FILTER VESSEL (B)	241
N26	N	12300	7.6	B.3	CF FILTER VESSEL (C)	241
P62	N	6300	10.5	A.5	BOILER (HB)	247
P62	N	6300	9.5	B.0	BOILER (HB)	247
P24	N	6300	9.3	C.5	HNCW CHILLER (A)	248
P24	N	6300	9.3	D.5	HNCW CHILLER (B)	248

Table 9A.6-4 Fire Hazard Analysis Equipment Database Sorted by Room - Turbine Building (Continued)

WBS	Elec Div.	Elev Loc.	Loc No. Coord	Loc Alpha Coord	Description	Room No.
P24	N	6300	9.3	E.5	HNCW CHILLER (C)	248
P24	N	6300	9.3	F.5	HNCW CHILLER (D)	248
P24	N	6300	9.3	G.5	HNCW CHILLER (E)	248
P24	N	6300	9.4	C.9	HNCW PUMP (A)	248
P24	N	6300	9.4	D.9	HNCW PUMP (B)	248
P24	N	6300	9.4	E.9	HNCW PUMP (C)	248
P24	N	6300	9.4	F.9	HNCW PUMP (D)	248
P24	N	6300	9.4	G.9	HNCW PUMP (E)	248
N22	N	12300	7.6	F.5	HIGH PRESSURE DRAIN TANK	2X3
H22	N	12300	7.4	F.3	LOCAL RACK	2X3
N62	N	12300	3.4	B.6	OG PRE HEATER (A)	2X4
N62	N	12300	3.4	C.6	OG PRE HEATER (B)	2X4
N62	N	12300	3.7	B.6	OG RECOMBINER (A)	2X4
N62	N	12300	3.7	C.6	OG RECOMBINER (B)	2X4
N62	N	12300	3.6	B.3	OG CONDENSER (A)	2X4
N62	N	12300	3.6	C.4	OG CONDENSER (B)	2X4
N62	N	12300	3.7	B.8	OG COOLER CONDENSER (A)	2X4
N62	N	12300	3.7	C.1	OG COOLER CONDENSER (B)	2X4
R22	N	12300	9.2	E.3	Non-1E M/C CTG1	2X5
R22	N	12300	9.5	E.2	Non-1E M/C CTG2	2X5
R22	N	12300	9.5	E.7	Non-1E M/C CTG3	2X5
R23	N	12300	9.2	E.9	Non-1E P/C CTG-1	2X5
R24	N	12300	9.4	F.3	Non-1E CTG MCC	2X5
C95	N	12300	5.5	B.9	CF/CD CONTROL PANEL	2X6
C95	N	12300	5.5	C.1	CF/CD CONTROL PANEL	2X6
H22	N	12300	6.2	A.3	LOCAL RACK	2X7
H22	N	12300	6.6	A.2	LOCAL RACK	2X7
H22	N	12300	6.8	A.2	LOCAL RACK	2X7
H22	N	12300	6.8	A.4	LOCAL RACK	2X7
R22	N	12300	9.5	D.0	CTG AUXILIARY EQUIPMENT AREA	2X8
R23	N	19700	9.2	A.4	Non-1E P/C SA10	310
R23	N	19700	9.5	A.4	Non-1E P/C SB10	310
R23	N	19700	9.2	B.0	Non-1E P/C SC10	310
R23	N	19700	9.5	B.0	Non-1E P/C SD10	310

Table 9A.6-4 Fire Hazard Analysis Equipment Database Sorted by Room - Turbine Building (Continued)

WBS	Elec Div.	Elev Loc.	Loc No. Coord	Loc Alpha Coord	Description	Room No.
R23	N	19700	9.2	D.6	Non-1E P/C SA12	310
R23	N	19700	9.2	B.7	Non-1E P/C SB12	310
R23	N	19700	9.5	B.7	Non-1E P/C SC13	310
R23	N	19700	9.8	B.7	Non-1E P/C SD13	310
R42	N	19700	9.2	H.4	Non-1E 125VDC CHG/PC/DB A	310
R42	N	19700	9.4	H.4	Non-1E 125VDC CHG/PC/DB B	310
R42	N	19700	9.7	H.4	Non-1E 125VDC CHG/PC/DB C	310
R42	N	19700	9.6	F.2	Non-1E 250VDC CHG/PC/DB A1	310
R42	N	19700	9.6	E.4	Non-1E 250VDC CHG/PC/DB B1	310
R42	N	19700	9.8	F.2	Non-1E 250VDC CHG/PC/DB A2	310
R42	N	19700	9.8	E.4	Non-1E 250VDC CHG/PC/DB B2	310
R23	N	19700	9.2	C.3	PIP P/C A30	310
R23	N	19700	9.2	D.0	PIP P/C A31	310
R23	N	19700	9.5	C.3	PIP P/C A34	310
R23	N	19700	9.5	D.0	PIP P/C B31	310
R23	N	19700	9.8	D.0	PIP P/C B35	310
R23	N	19700	9.8	C.3	PIP P/C C31	310
R23	N	19700	9.5	D.6	PIP P/C B30	310
R23	N	19700	9.8	D.6	PIP P/C C32	310
R23	N	19700	9.8	B.0	PIP P/C C30	310
N21	N	12300	6.7	C.6	STEAM EJECTOR UNIT (A)	311
N21	N	12300	6.7	C.3	STEAM EJECTOR UNIT (B)	311
U41	N	19700	8.6	H.9	MS TUNNEL L/C	313
U41	N	19700	8.6	J.6	MS TUNNEL L/C	313
N33	N	12300	7.3	D.6	GRAND STEAM CONDENSER	314
N33	N	12300	7.2	E.6	GRAND STEAM EXHAUSTER (A)	314
N33	N	12300	7.4	E.6	GRAND STEAM EXHAUSTER (B)	314
N21	N	2300	3.6	B.4	CONDENSATE VACUUM PUMP (A)	315
N21	N	2300	2.5	B.4	CONDENSATE VACUUM PUMP (B)	315
N21	N	19700	7.3	H.3	6TH FEED WATER HEATER (A)	316
N21	N	19700	7.7	H.3	5TH FEED WATER HEATER (A)	316
N37	N	19700	7.8	F.5	TURBINE BYPASS VALVE	316
H22	N	19700	7.4	H.3	LOCAL RACK	316
H22	N	19700	7.6	H.5	LOCAL RACK	316

Table 9A.6-4 Fire Hazard Analysis Equipment Database Sorted by Room - Turbine Building (Continued)

WBS	Elec Div.	Elev Loc.	Loc No. Coord	Loc Alpha Coord	Description	Room No.
R40	N	12300	10.5	B.9	COMBUSTION TURBINE GENERATOR	317
R40	N	12300	10.6	E.2	DIESEL GENERATOR	317
N62	N	19700	2.4	B.8	OG EXTRACTOR (A)	31X-1
N62	N	19700	2.4	C.3	OG EXTRACTOR (B)	31X-1
R22	Class 1E	19700	7.2	D.8	SAFETY RELATED LPCP SWITCHGEAR (A)	31X-2
R22	Class 1E	19700	7.4	D.8	SAFETY RELATED LPCP SWITCHGEAR (B)	31X-2
R22	Class 1E	19700	7.2	E.4	SAFETY RELATED LPCP SWITCHGEAR (C)	31X-2
R22	Class 1E	19700	7.4	E.4	SAFETY RELATED LPCP SWITCHGEAR (D)	31X-2
U41	N	19700	2.4	A.7	OFF-GAS CHARCOAL BED L/C	320
U41	N	19700	7.9	A.1	IPB COOLING UNIT ROOM L/C	320
U41	N	19700	5.2	B.5	SCR PANEL ROOM L/C	320
U41	N	19700	5.5	C.5	IPB/Z L/C	320
U41	N	19700	6.4	A.5	IPB COOLING UNIT	320
N43	N	19700	3.5	C.5	STATOR COIL COOLING UNIT	320
H21	N	19700	3.1	C.8	STATOR COIL COOLING CTRL PANEL	320
H21	N	19700	3.7	B.2	GENERATOR OIL&GAS CTRL PANEL	320
H21	N	19700	3.7	B.3	GENERATOR OIL&GAS CTRL PANEL	320
H21	N	19700	6.4	A.9	PT&SA PANEL	320
H21	N	19700	4.0	B.9	VT Panel	320
H21	N	19700	4.0	B.5	NGR PANEL	320
R22	N	19700	6.4	B.8	GENERATOR CIRCUIT BREAKER	320
N21	N	19700	4.1	F.6	4TH FEED WATER HEATER (A)	321
N21	N	19700	4.1	E.6	4TH FEED WATER HEATER (B)	321
N21	N	19700	4.1	D.6	4TH FEED WATER HEATER (C)	321
N21	N	19700	4.3	F.4	3RD FEED WATER HEATER (A)	321
N21	N	19700	4.3	E.4	3RD FEED WATER HEATER (B)	321
N21	N	19700	4.3	D.4	3RD FEED WATER HEATER (C)	321
N21	N	19700	2.3	F.2	1ST FEED WATER HEATER DRAIN TANK (A)	321
N21	N	19700	2.3	D.9	1ST FEED WATER HEATER DRAIN TANK (B)	321
N21	N	19700	2.4	C.9	1ST FEED WATER HEATER DRAIN TANK (C)	321
N21	N	24400	4.2	F.4	1ST FEED WATER HEATER (A)	321
N21	N	24400	4.2	E.4	1ST FEED WATER HEATER (B)	321
N21	N	24400	4.2	D.4	1ST FEED WATER HEATER (C)	321
N21	N	24400	4.1	F.6	2ND FEED WATER HEATER (A)	321

Table 9A.6-4 Fire Hazard Analysis Equipment Database Sorted by Room - Turbine Building (Continued)

WBS	Elec Div.	Elev Loc.	Loc No. Coord	Loc Alpha Coord	Description	Room No.
N21	N	24400	4.1	E.6	2ND FEED WATER HEATER (B)	321
N21	N	24400	4.1	D.6	2ND FEED WATER HEATER (C)	321
N22	N	24400	3.7	E.3	MOISTURE SEPARATOR DRAIN TANK	321
N22	N	24400	3.7	E.7	MOISTURE SEPARATOR DRAIN TANK	321
N22	N	24400	6.3	E.3	MOISTURE SEPARATOR DRAIN TANK	321
N22	N	24400	6.3	E.7	MOISTURE SEPARATOR DRAIN TANK	321
N22	N	24400	3.5	D.3	MSH 1ST STAGE HEATER DRAIN TANK	321
N22	N	24400	3.7	F.6	MSH 1ST STAGE HEATER DRAIN TANK	321
N22	N	24400	6.5	D.3	MSH 1ST STAGE HEATER DRAIN TANK	321
N22	N	24400	6.3	F.6	MSH 1ST STAGE HEATER DRAIN TANK	321
N22	N	24400	3.7	D.3	MSH 2ND STAGE HEATER DRAIN TANK	321
N22	N	24400	3.6	F.2	MSH 2ND STAGE HEATER DRAIN TANK	321
N22	N	24400	6.3	D.3	MSH 2ND STAGE HEATER DRAIN TANK	321
N22	N	24400	6.4	F.2	MSH 2ND STAGE HEATER DRAIN TANK	321
N34	N	19700	7.3	H.5	MAIN TURBINE LUBE OIL TANK	330
N34	N	19700	7.3	J.4	MAIN FLUSHING PUMP	330
N21	N	19700	3.3	H.3	6TH FEED WATER HEATER (B)	331
N21	N	19700	3.7	H.3	5TH FEED WATER HEATER (B)	331
H22	N	19700	3.4	H.5	LOCAL RACK	331
H22	N	19700	3.6	H.6	LOCAL RACK	331
N31	N	19700	4.0	H.5	MAIN STEAM STOP VALVE	334
N31	N	19700	4.0	H.5	MAIN STEAM CONTROL VALVE	334
N42	N	19700	3.7	B.8	GENERATOR HYDROGEN GAS DRYER	340
R24	N	19700	8.7	B.7	Non-1E MCC SC132	340
R24	N	19700	8.7	C.2	Non-1E MCC SC133	340
R24	N	19700	8.7	C.5	Non-1E MCC SD130	340
R24	N	19700	8.7	D.4	Non-1E MCC SD131	340
R24	N	19700	8.7	D.9	Non-1E MCC SD132	340
R24	N	19700	8.7	E.4	Non-1E MCC SD133	340
N26	N	19700	7.3	B.2	CF MODULE TANK	342
C95	N	12300	6.3	B.8	CONDENSATE DEMINERALIZER (A)	344
C95	N	12300	6.6	B.8	CONDENSATE DEMINERALIZER (B)	344
C95	N	12300	6.9	B.8	CONDENSATE DEMINERALIZER (C)	344
C95	N	12300	6.3	B.2	CONDENSATE DEMINERALIZER (D)	344

Table 9A.6-4 Fire Hazard Analysis Equipment Database Sorted by Room - Turbine Building (Continued)

WBS	Elec Div.	Elev Loc.	Loc No. Coord	Loc Alpha Coord	Description	Room No.
C95	N	12300	6.6	B.2	CONDENSATE DEMINERALIZER (E)	344
C95	N	12300	6.9	B.2	CONDENSATE DEMINERALIZER (F)	344
N44	N	19700	3.3	B.6	GENERATOR OIL SEAL UNIT	3X2
H22	N	19700	3.1	B.5	LOCAL RACK	3X2
H22	N	19700	3.1	B.6	LOCAL RACK	3X2
H22	N	19700	3.4	B.4	LOCAL RACK	3X2
H22	N	19700	3.4	B.5	LOCAL RACK	3X2
H21	N	19700	5.2	A.5	EXCITER RECTIFIER PANEL	3X3
H21	N	19700	5.6	A.5	EXCITER CTRL PANEL	3X3
R42	N	19700	9.8	F.7	Non-1E 250VDC Battery A1	3X4
R42	N	19700	9.8	G.0	Non-1E 250VDC Battery B1	3X4
R42	N	19700	9.4	F.7	SINK	3X4
R42	N	19700	9.8	G.4	Non-1E 250VDC Battery A2	3X5
R42	N	19700	9.8	G.8	Non-1E 250VDC Battery B2	3X5
R42	N	19700	9.4	G.4	SINK	3X5
R42	N	19700	9.7	F.6	Non-1E 125VDC Battery A	3X6
R42	N	19700	9.4	F.9	SINK	3X6
R42	N	19700	9.7	G.3	Non-1E 125VDC Battery B	3X7
R42	N	19700	9.4	G.3	SINK	3X7
R42	N	19700	9.7	G.7	Non-1E 125VDC Battery C	3X8
R42	N	19700	9.4	G.6	SINK	3X8
U41	N	19700	10.5	F.7	ELECTRICAL EQUIPMENT AREA	3X9
U41	N	38300	8.8	D.3	R/B SUPPLY FAN (A)	411
U41	N	38300	8.8	D.7	R/B SUPPLY FAN (B)	411
U41	N	38300	8.8	E.4	R/B SUPPLY FAN (C)	411
P22	N	47200	7.7	E.8	HNCW,TCW SURGE TANK	411
U41	N	27800	9.5	E.5	R/B EXHAUST FAN (A)	412
U41	N	27800	9.5	F.5	R/B EXHAUST FAN (B)	412
U41	N	27800	9.5	G.5	R/B EXHAUST FAN (C)	412
U41	N	27800	9.1	E.5	R/B EXHAUST FAN FILTER (A)	412
U41	N	27800	9.1	F.5	R/B EXHAUST FAN FILTER (B)	412
U41	N	27800	9.1	G.5	R/B EXHAUST FAN FILTER (C)	412
H22	N	27800	3.8	G.2	LOCAL RACK	413
H22	N	27800	2.1	G.9	LOCAL RACK	413

Table 9A.6-4 Fire Hazard Analysis Equipment Database Sorted by Room - Turbine Building (Continued)

WBS	Elec Div.	Elev Loc.	Loc No. Coord	Loc Alpha Coord	Description	Room No.
H22	N	27800	2.1	H.9	LOCAL RACK	413
U41	N	27800	3.9	C.6	MSH ROOM L/C	420
N41	N	27800	4.0	C.4	GENERATAOR	421
N35	N	27800	6.5	E.5	MOISTURE SEPARATOR AND REHEATER (A)	423
N35	N	27800	3.6	E.5	MOISTURE SEPARATOR AND REHEATER (B)	423
N31	N	27800	4.0	F.5	LOW PRESSURE TURBINE (A)	423
N31	N	27800	4.0	E.5	LOW PRESSURE TURBINE (B)	423
N31	N	27800	4.0	D.5	LOW PRESSURE TURBINE (C)	423
N31	N	27800	6.9	G.3	COMBINED INTERMEDIATE VALVE	431
N31	N	27800	3.1	G.3	COMBINED INTERMEDIATE VALVE	431
N34	N	27800	3.9	H.6	MIST SEPARATOR	431
N31	N	27800	4.0	G.5	HIGH PRESSURE TURBINE	432
U41	N	27800	6.1	C.6	MSH ROOM L/C	441
H22	N	27800	6.9	C.6	LOCAL RACK	441
U41	N	38300	8.2	A.3	R/B T/B SUPPLY ROOM L/C	443
U41	N	38300	8.8	A.6	T/B EXHAUST FAN (A)	443
U41	N	38300	8.8	B.5	T/B EXHAUST FAN (B)	443
U41	N	38300	8.8	C.5	T/B EXHAUST FAN (C)	443
U41	N	38300	8.5	F.3	R/B T/B EXHAUST ROOM L/C	445
U41	N	38300	8.7	G.3	T/B SUPPLY FAN (A)	445
U41	N	38300	8.7	H.3	T/B SUPPLY FAN (B)	445
U41	N	38300	8.7	J.3	T/B SUPPLY FAN (C)	445
N33	N	27800	8.5	D.5	GRAND STEAM GENERATOR	4X1
H22	N	27800	8.8	D.3	LOCAL RACK	4X1
H22	N	27800	8.8	D.6	LOCAL RACK	4X1
N33	N	27800	8.9	C.3	GRAND STEAM GENERATOR FEEDWATER PUMP (A)	4X2
N33	N	27800	8.9	C.5	GRAND STEAM GENERATOR FEEDWATER PUMP (B)	4X2
U41	N	27800	8.0	F.5	T/B EQUIPMENT COMPARTMENT EXHAUST FAN	4X3
H22	N	27800	8.4	E.1	LOCAL RACK	4X3
H22	N	27800	8.7	E.1	LOCAL RACK	4X3
U41	N	27800	9.2	B.5	ELECTRIC BOILER ROOM ROOF EXHAUSTER	4X4
U41	N	27800	9.2	A.5	ELECTRIC BOILER ROOM ROOF EXHAUSTER	4X4
U41	N	27800	10.3	B.3	COMBUSTION TURBINE GENERATOR ROOM ROOF EXHAUSTER	4X4

Table 9A.6-4 Fire Hazard Analysis Equipment Database Sorted by Room - Turbine Building (Continued)

WBS	Elec Div.	Elev Loc.	Loc No. Coord	Loc Alpha Coord	Description	Room No.
U41	N	27800	10.3	B.7	COMBUSTION TURBINE GENERATOR ROOM ROOF EXHAUSTER	4X4
U41	N	27800	10.3	C.3	COMBUSTION TURBINE GENERATOR ROOM ROOF EXHAUSTER	4X4
U41	N	27800	10.3	C.7	COMBUSTION TURBINE GENERATOR ROOM ROOF EXHAUSTER	4X4
U41	N	27800	10.3	D.3	COMBUSTION TURBINE GENERATOR ROOM ROOF EXHAUSTER	4X4
U41	N	27800	10.3	D.7	COMBUSTION TURBINE GENERATOR ROOM ROOF EXHAUSTER	4X4
U41	N	27800	10.7	B.3	COMBUSTION TURBINE GENERATOR ROOM ROOF EXHAUSTER	4X4
U41	N	27800	10.7	B.7	COMBUSTION TURBINE GENERATOR ROOM ROOF EXHAUSTER	4X4
U41	N	27800	10.7	C.3	COMBUSTION TURBINE GENERATOR ROOM ROOF EXHAUSTER	4X4
U41	N	27800	10.7	C.7	COMBUSTION TURBINE GENERATOR ROOM ROOF EXHAUSTER	4X4
U41	N	27800	10.7	D.3	COMBUSTION TURBINE GENERATOR ROOM ROOF EXHAUSTER	4X4
U41	N	27800	10.7	D.7	COMBUSTION TURBINE GENERATOR ROOM ROOF EXHAUSTER	4X4

Table 9A.6-4 Fire Hazard Analysis Equipment Database Sorted by Room - Turbine Building (Continued)

MPL No.	Elec Div.	Elev. Loc.	Loc No. Coord	Loc Alpha Coord	Description	Room No.
B21-PT301A	1	1500	TBD	TBD	PRESSURE TRANSMITTER	120
B21-PT301B	2	1500	TBD	TBD	PRESSURE TRANSMITTER	120
B21-PT301C	3	1500	TBD	TBD	PRESSURE TRANSMITTER	120
B21-PT301D	4	1500	TBD	TBD	PRESSURE TRANSMITTER	120
E31-TE021A	1	14750	5.5	K.8	MSL TEMPERATURE SENSOR	219
E31-TE021B	2	14750	5.8	K.8	MSL TEMPERATURE SENSOR	219
E31-TE021C	3	14750	6.2	K.8	MSL TEMPERATURE SENSOR	219
E31-TE021D	4	14750	6.4	K.8	MSL TEMPERATURE SENSOR	219
E31-TE022A	1	15100	5.5	K.8	TEMPERATURE ELEMENT	219
E31-TE022B	2	15100	5.8	K.8	TEMPERATURE ELEMENT	219
E31-TE022C	3	15100	6.2	K.8	TEMPERATURE ELEMENT	219
E31-TE022D	4	15100	6.4	K.8	TEMPERATURE ELEMENT	219
E31-TE023A	1	15450	5.5	K.8	TEMPERATURE ELEMENT	219
E31-TE023B	2	15450	5.8	K.8	TEMPERATURE ELEMENT	219
E31-TE023C	3	15450	6.2	K.8	TEMPERATURE ELEMENT	219
E31-TE023D	4	15450	6.4	K.8	TEMPERATURE ELEMENT	219
E31-TE024A	1	15800	5.5	K.8	TEMPERATURE ELEMENT	219
E31-TE024B	2	15800	5.8	K.8	TEMPERATURE ELEMENT	219
E31-TE024C	3	15800	6.2	K.8	TEMPERATURE ELEMENT	219
E31-TE024D	4	15800	6.4	K.8	TEMPERATURE ELEMENT	219
E31-TE025A	1	16150	5.5	K.8	TEMPERATURE ELEMENT	219
E31-TE025B	2	16150	5.8	K.8	TEMPERATURE ELEMENT	219
E31-TE025C	3	16150	6.2	K.8	TEMPERATURE ELEMENT	219
E31-TE025D	4	16150	6.4	K.8	TEMPERATURE ELEMENT	219
E31-TE026A	1	16500	5.5	K.8	TEMPERATURE ELEMENT	219
E31-TE026B	2	16500	5.8	K.8	TEMPERATURE ELEMENT	219
E31-TE026C	3	16500	6.2	K.8	TEMPERATURE ELEMENT	219
E31-TE026D	4	16500	6.4	K.8	TEMPERATURE ELEMENT	219
E31-TE027A	1	16850	5.5	K.8	TEMPERATURE ELEMENT	219
E31-TE027B	2	16850	5.8	K.8	TEMPERATURE ELEMENT	219
E31-TE027C	3	16850	6.2	K.8	TEMPERATURE ELEMENT	219
E31-TE027D	4	16850	6.4	K.8	TEMPERATURE ELEMENT	219
E31-TE028A	1	17100	5.5	K.8	TEMPERATURE ELEMENT	219

Table 9A.6-4 Fire Hazard Analysis Equipment Database Sorted by Room - Turbine Building (Continued)

MPL No.	Elec Div.	Elev. Loc.	Loc No. Coord	Loc Alpha Coord	Description	Room No.
E31-TE028B	2	17100	5.8	K.8	TEMPERATURE ELEMENT	219
E31-TE028C	3	17100	6.2	K.8	TEMPERATURE ELEMENT	219
E31-TE028D	4	17100	6.4	K.8	TEMPERATURE ELEMENT	219
E31-TE029A	1	17450	5.5	K.8	TEMPERATURE ELEMENT	219
E31-TE029B	2	17450	5.8	K.8	TEMPERATURE ELEMENT	219
E31-TE029C	3	17450	6.2	K.8	TEMPERATURE ELEMENT	219
E31-TE029D	4	17450	6.4	K.8	TEMPERATURE ELEMENT	219
C71-PS002A	1	8000	TBD	TBD	PRESSURE SWITCH	232
C71-PS002B	2	8000	TBD	TBD	PRESSURE SWITCH	232
C71-PS002C	3	8000	TBD	TBD	PRESSURE SWITCH	232
C71-PS002D	4	8000	TBD	TBD	PRESSURE SWITCH	232
B21-PT028A	1	17000	3.6	K.0	PRESSURE TRANSMITTER	333
B21-PT028B	2	17000	3.8	K.0	PRESSURE TRANSMITTER	333
B21-PT028C	3	17000	4.2	K.0	PRESSURE TRANSMITTER	333
B21-PT028D	4	17000	4.4	K.0	PRESSURE TRANSMITTER	333
C71-PoS001	1	22000	3.6	H.6	POSITION SWITCH	334
C71-PoS001	2	22000	3.8	H.6	POSITION SWITCH	334
C71-PoS001	3	22000	4.2	H.6	POSITION SWITCH	334
C71-PoS001	4	22000	4.4	H.6	POSITION SWITCH	334
C71-PoS004	1	22000	3.6	H.7	POSITION SWITCH	334
C71-PoS004	2	22000	3.8	H.7	POSITION SWITCH	334
C71-PoS004	3	22000	4.2	H.7	POSITION SWITCH	334
C71-PoS004	4	22000	4.4	H.7	POSITION SWITCH	334
C71-PT003A	1	27800	TBD	TBD	PRESSURE TRANSMITTER	431
C71-PT003B	2	27800	TBD	TBD	PRESSURE TRANSMITTER	431
C71-PT003C	3	27800	TBD	TBD	PRESSURE TRANSMITTER	431
C71-PT003D	4	27800	TBD	TBD	PRESSURE TRANSMITTER	431

9B Summary of Analysis Supporting Fire Protection Design Requirements

The information in this appendix of the reference ABWR DCD, including all subsections, tables and figures, is incorporated by reference with the following departure.

STD DEP T1 3.4-1

9B.2.3.3 Cable Trays

It is possible that during the detailed design phase certain areas of concentration of cable trays may exceed the normal or electrical combustible loading limit. ~~Multiplexing of signals~~ The use of data communication *and the overall plant layout will tend to minimize the number of these areas of concentration of cable trays. There are options available to the detail designer to which will specific concentrations above the general stated combustible loading limits. For example, the designer could use one or more of the following options.*

9C Regulatory Guide 1.52, Section C, Compliance Assessment

The information in this appendix of the reference ABWR DCD, including all subsections, is incorporated by reference with the following departure.

STD DEP 1.8-1

9C.1 ABWR Compliance with RG 1.52, Revision 2, Section C

(2) System Design Criteria

(h) "The power supply and electrical distribution system for the ESF atmosphere cleanup system described in Section C.2.a above [one that is used to mitigate accident doses] should be designed in accordance with Regulatory Guide 1.32. All instrumentation and equipment controls should be designed to IEEE Standard ~~279~~ 603. The ESF system should be qualified and tested under Regulatory Guide 1.89. To the extent applicable, Regulatory Guides 1.30, 1.100, and 1.118 and IEEE-334 should be considered in the design."

9D SRP 6.5.1, Table 6.5.1-1 Compliance Assessment

The information in this appendix of the reference ABWR DCD is incorporated by reference with no departures or supplements.

9E Fire Related Administrative Controls

9E.1 Introduction

The following site-specific supplement addresses COL License Information item 9.35 as detailed in Subsection 9.5.1.6.4.

In addition to addressing the administrative controls described in Subsection 9.5.1.6.4, this Appendix provides a fire protection administrative program meeting the administrative guidance provided in Regulatory Guide (RG) 1.189, Revision 1, "Fire Protection for Nuclear Power Plants." The presentation and numbering of this Appendix corresponds to the presentation and numbering in RG 1.189.

For completeness, standard design and hardware related information described in the DCD is referenced in this Appendix at the applicable section in RG 1.189. As discussed in the Introduction to RG 1.189, and in Section C.III of RG 1.206, "Combined License Applications for Nuclear Power Plants (LWR Edition)," this standard information is governed by the edition of industry codes and standards applicable within 6 months of the DCD submittal date.

As described in Subsection 9.5.1.2 the overall Fire Protection Program (FPP) for the facility extends the concept of defense-in-depth to fire protection in fire areas important to safety, with the following three objectives:

(a) Prevent fires from starting.

(b) Detect rapidly, control, and extinguish promptly those fires that do occur.

(c) Provide protection for SSCs important to safety so that a fire that is not promptly extinguished by the fire suppression activities will not prevent the safe shutdown of the plant.

As discussed in Subsection 9.5.1.1.2, a principal feature of the ABWR design approach to fire protection is providing three complete divisions of safety-related cooling systems with only one division located in any single fire area. Complete burnout of any fire area without recovery will not prevent safe shutdown of the plant; therefore, complete burnout of a fire area can be tolerated (divisional separation is not practical in the case of the inerted containment, the control room and the remote shutdown room, and the basis for acceptability of these areas is discussed in more detail in Subsection 9.5.1.1.2).

(a) The overall FPP for STP 3 & 4 is collectively described in the following sections:

– Subsection 9.5.1 Fire Protection System (general descriptions, design bases and principal design features of barriers, alarm and detection systems suppression systems and HVAC systems)

– Section 13.0 Conduct of Operations

– Section 9A Fire Hazards Analysis

– Section 9B Summary of Analysis Supporting Fire Protection Design Requirements

– Section 9E Fire Related Administrative Controls

– Section 19M Fire Protection Probabilistic Risk Assessment

– Section 19Q ABWR Shutdown Risk Assessment

– Technical Specification 5.5.1.1.d, Fire Protection Program Implementation

COLA Part 5.1, Section D and Section H discuss fire protection elements related to the Emergency Plan.

(b) STPNOC organizational responsibilities for the FPP are identified in Subsection 9E.1.1 below.

(c) The authorities of personnel implementing the FPP and administrative controls are described in Subsection 9E.1.1 below.

(d) Fire protection, fire detection and suppression capability, and limiting fire damage with barriers and divisional separation are described in Subsection 9.5.1.

(e) The administrative controls and personnel requirements for fire protection and manual fire suppression activities are described in Section 9E.

(f) The automatic and manually operated fire detection and suppression systems are described in Subsection 9.5.1.

(g) The fire barriers and divisional separation provided to limit fire damage to SSCs important to safety, so that the capability to shut down the plant safely is ensured, is described in Subsection 9.5.1.

The FPP administrative controls described in this Appendix address the responsibilities for continuing evaluation of fire hazards associated with construction of STP 3 & 4 to ensure the continued safe operation of STP 1 & 2 and similarly, the safe operation of STP Units 1, 2 and 3 during the completion of STP Unit 4. STPNOC provides additional fire barriers and fire protection capability, as necessary, to protect the operating units from any fire hazards associated with these construction activities.

9E.1.1 Organization, Staffing, and Responsibilities

(a) The President & Chief Executive Officer sets policy and has overall responsibility for the formulation, implementation, and assessment of the effectiveness of the Fire Protection Program.

The Group Vice President has the executive authority and responsibility for the FPP.

(b) The Vice President Engineering and Construction reports to the Group Vice President and has direct responsibility to establish, implement and maintain written procedures for implementing the FPP and for periodically assessing the effectiveness of the FPP including fire drills and training conducted by the fire brigade and plant personnel. The results of these assessments are reported to the Group Vice President with recommendations for improvements or corrective actions as deemed necessary.

(c) The Plant General Manger is responsible for the overall administration of the plant operations and emergency plans that include the fire protection and prevention program and that provide a single point of control and contact for all contingencies.

The Plant General Manager has responsibility for approving or disapproving Fire Protection Program implementing procedures and changes thereto as recommended by the Plant Operations Review Committee (PORC).

The Plant General Manager is responsible for assisting the Plant General Manager STP 1 & 2 in assessing the potential fire related impact to STP 1 & 2 from construction activities on STP 3 & 4.

The Plant General Manager is responsible for the evaluation of the potential fire related impact to STP 3 from construction activities on STP 4 (see additional discussion in Section 1.10S).

(d) The Fire Protection Coordinator reports through the chain of command to the Vice President, Engineering and Construction. Primary responsibility for implementation of the FPP has been delegated to the Fire Protection Coordinator, who is an individual knowledgeable through education, training, and/or experience in fire protection and nuclear safety. Other personnel are available to assist the Fire Protection Coordinator as necessary to accomplish the following:

(i) Implement periodic inspections to minimize the amount of combustibles in plant areas important to safety; determine the effectiveness of housekeeping practices; ensure the availability and acceptable condition of all fire protection systems/equipment, emergency breathing apparatus, emergency lighting, communication equipment, fire stops, penetration seals, and fire-retardant coatings; and ensure that prompt and effective

corrective actions are taken to correct conditions adverse to fire protection and preclude their recurrence

(ii) Provide firefighting training for operating plant personnel and the plant's fire brigade; design and select equipment; periodically inspect and test fire protection systems and equipment in accordance with established procedures; and evaluate test results and determine the acceptability of the systems under test

(iii) Assist in the critique of all fire drills to determine how well the training objectives have been met

(iv) Review proposed work activities with regard to in-plant fire protection, identify potential transient fire hazards, and specify required additional fire protection in the work activity procedure

(v) Implement a program to indoctrinate all plant contractor personnel in appropriate administrative procedures that implement the FPP and the emergency procedures relative to fire protection

(vi) Implement a program to instruct personnel on the proper handling of accidental events such as leaks or spills of flammable materials that are related to fire protection

(vii) Review hot work

(e) The Vice President Oversight and Regulatory Affairs is responsible for:

(i) Establishing the fire protection quality assurance program in accordance with Regulatory Position 1.7, Quality Assurance, of RG 1.189 as delineated in the document “STP 3 & 4 Quality Assurance Program Description”

(ii) Ensuring effective implementation of the FPP quality assurance program by planned surveillances and scheduled audits

(iii) Ensuring results of FPP surveillance and audit activities are promptly reported to cognizant management personnel

(f) The plant's fire brigade positions and responsibilities are identified as follows:

(i) The plant fire brigade positions are responsible for fighting fires. The authority and responsibility of each fire brigade position relative to fire protection are clearly defined.

(ii) The responsibilities of each fire brigade position correspond with the actions required by the firefighting procedures.

(iii) Collateral responsibilities of the fire brigade members do not conflict with their responsibilities related to the fire brigade during a fire emergency. A collateral responsibility is a required action or decision that would adversely affect the fire brigade member's ability to perform a required fire fighting function.

(iv) The minimum number of trained fire brigade members available on site for each operating shift should be consistent with the activities required to combat credible and challenging fires, but is no less than five members. The size of the fire brigade is based upon the functions required to fight fires, with adequate allowance for injuries. Fire brigade staffing accounts for the operational and emergency response demands on shift personnel in the event of a significant fire.

9E.1.2 Fire Hazards Analysis

This topic is addressed in Section 9A.

9E.1.3 Safe-Shutdown Analysis

This topic is addressed in Subsections 9.5.1.3.11 and 9.5.1.3.12.

9E.1.4 Fire Test Reports and Fire Data

This topic is addressed in Subsection 9.5.13.7 (COL License Information Item 9.24).

9E.1.5 Compensatory Measures

Temporary changes to specific fire protection features necessary to accomplish maintenance or modifications are permissible when accompanied by interim compensatory measures, such as fire watches, temporary fire barriers, or backup suppression capability.

Compensatory measures may be implemented as an interim step to restore operability or to otherwise enhance the capability of degraded or nonconforming fire protection related SSCs until the final corrective action is complete. Reliance on a compensatory measure for operability is given important consideration in establishing the time frame for completing the corrective action. Nonconforming conditions or degraded conditions requiring an operator action to demonstrate operability are resolved expeditiously.

The guidance provided in NRC Inspection Manual Part 9900, “Operability Determinations & Functionality Assessments for Resolution of Degraded or Nonconforming Conditions Adverse to Quality or Safety” is utilized when compensatory measures are relied upon.

9E.1.6 Fire Protection Training and Qualifications

The Vice President, Engineering and Construction, maintains available staff for the FPP knowledgeable in both fire protection and nuclear safety.

9E.1.6.1 Fire Protection Staff Training and Qualifications

Fire protection staff qualifications:

(a) The Fire Protection Coordinator, or a person available for consultation, is a graduate of an accredited engineering or fire science curriculum and has a minimum of six years applicable experience, three of which have been in the area of fire protection. Education and/or experience acceptable to the Society of Fire Protection Engineers for full member status may be considered as equivalent qualifications.

(b) Fire brigade training is discussed in Subsection 9E.1.6.4. Brigade member qualification includes satisfactory completion of a physical exam for performance of strenuous physical activity.

(c) Personnel responsible for the maintenance and testing of the fire protection systems are qualified by training and experience for this work.

(d) The Fire Protection Coordinator is responsible for the training of the fire brigade and is qualified by knowledge, suitable training, and experience for the conduct of this training.

9E.1.6.2 General Employee Training

General employees are instructed in their responsibilities to prevent and detect fires. Training includes information on the types of fires and related extinguishing agents, specific fire hazards at the site, and actions in the event of a fire suppression system actuation. Specific instruction includes:

(a) Principal responsibility to notify the control room upon discovering a fire, prior to attempting to extinguish the fire

(b) Actions upon actuation of local fire suppression systems or hearing a fire alarm

(c) Administrative controls on the use of combustibles and ignition sources

(d) Actions necessary in the event of a combustible liquid spill or leak or combustible gas release or leaks

9E.1.6.3 Fire Watch Training

Fire watches are used for observation and control of fire hazards associated with hot work and may provide compensatory measures for degraded fire protection systems and features. Specific fire watch training provides instruction on fire watch duties, responsibilities, and required actions for both 1-hour roving and continuous fire watches. Fire watch qualifications include hands-on training on a practice fire with the extinguishing equipment to be used while on fire watch. If fire watches are to be used as compensatory actions, the fire watch training includes recordkeeping requirements if required by 9E.1.5.

9E.1.6.4 Fire Brigade Training and Qualifications

Fire brigade training establishes and maintains the capability to fight credible and challenging fires. The program consists of initial classroom instruction followed by periodic classroom instruction, firefighting practice, and fire drills (See 9E.3.5.1.4 for drill guidance).

The training recommendations of NFPA 600, “Standard on Industrial Fire Brigades” provide applicable criteria for training the plant fire brigade.

9E.1.6.4.1 Qualifications

The brigade leader and at least two brigade members have sufficient training in or knowledge of plant systems to understand the effects of fire and fire suppressants on safe-shutdown capability. The brigade leader has training or experience necessary to assess the potential safety consequences of a fire and advise control room personnel as evidenced by possession of an operator's license or equivalent knowledge of plant systems. The qualification of fire brigade members includes an annual physical examination to determine their ability to perform strenuous firefighting activities.

9E.1.6.4.2 Instruction

Instruction is provided in the following:

(a) indoctrination of the plant firefighting plan with specific identification of each individual's responsibilities

(b) identification of the type and location of fire hazards and associated types of fires that could occur in the plant

(c) the toxic and corrosive characteristics of expected products of combustion

(d) identification of the location of firefighting equipment for each fire area and familiarization with the layout of the plant, including access and egress routes to each area

(e) the proper use of available firefighting equipment and the correct method of fighting each type of fire, including the following:

(i) fires involving radioactive materials

(ii) fires in energized electrical equipment

(iii) fires in cables and cable trays

(iv) hydrogen fires

(v) fires involving flammable and combustible liquids or hazardous process chemicals

(vi) fires resulting from construction or modifications (welding)

(vii) record file fires

(f) the proper use of communication, lighting, ventilation, and emergency breathing equipment

(g) the proper method for fighting fires inside buildings and confined spaces

(h) the direction and coordination of the firefighting activities (fire brigade leaders only)

(i) detailed review of firefighting strategies and procedures

(j) review of the latest plant modifications and corresponding changes in firefighting plans

9E.1.6.4.3 Fire Brigade Practice

Practice sessions are held for the fire brigade of each shift on the proper method of fighting the various types of fires that could occur in a nuclear power plant. These sessions provide brigade members with experience in actual fire extinguishment and the use of self-contained breathing apparatus under the strenuous conditions encountered in firefighting. Practice sessions are held at least once per year for each fire brigade member.

9E.1.6.4.4 Fire Brigade Training Records

Individual records of training provided to each fire brigade member, including drill critiques, for at least 3 years to ensure that each member receives training in all parts of the training program. Records of fire brigade training are available for NRC inspection.

9E.1.7 Quality Assurance

The quality assurance program for fire protection adopts Section 1.7, Quality Assurance, of RG 1.189, and is addressed in the “STP 3 & 4 Quality Assurance Program Description.”

9E.1.8 Fire Protection Program Changes/Code Deviations

Changes to the STP 3 & 4 FPP will be evaluated and processed in accordance with 10 CFR 52.98(c).

9E.2 Fire Prevention

9E.2.1 Control of Combustibles

Administrative controls and procedures control the handling and use of combustibles, prohibit storage of combustibles in plant areas important to safety, establish designated storage areas with appropriate fire protection, and control use of specific combustibles (e.g., wood) in plant areas important to safety.

9E.2.1.1 Transient Fire Hazards

Bulk storage of combustible materials is prohibited inside or adjacent to buildings or systems important to safety during all modes of plant operation. Procedures govern the handling of and limit transient fire hazards such as combustible and flammable liquids, wood and plastic products, high-efficiency particulate air (HEPA) and charcoal filters, dry ion exchange resins, or other combustible materials in buildings containing systems or equipment important to safety during all phases of operation, particularly during maintenance, modification, or refueling operations.

Transient fire hazards that cannot be eliminated are controlled and suitable protection is provided. Specific controls and protective measures include the following:

(a) Unused ion exchange resins are not stored in areas that contain or expose equipment important to safety.

(b) Hazardous chemicals are not stored in areas that contain or expose equipment important to safety.

(c) Use of wood inside buildings containing systems or equipment important to safety is permitted only when suitable noncombustible substitutes are not available. All wood smaller than 152 mm x 152 mm (6 in x 6 in) used in plant areas important to safety during maintenance, modification, or refueling operation (such as lay-down blocks or scaffolding) should be treated with a flame-retardant. See NFPA 703, "Standard for Fire-Retardant Treated Wood and Fire-Retardant Coatings for Building Materials." Wood is allowed into plant areas important to safety only when needed for immediate use.

(d) The use of plastic materials is minimized. Halogenated plastics such as polyvinyl chloride and neoprene are used only when substitute noncombustible materials are not available.

(e) Use of combustible material such as HEPA and charcoal filters, dry ion exchange resins, or other combustible supplies in areas important to safety are controlled. Such materials are allowed into areas important to safety only when they needed for immediate use.

(f) Equipment or supplies (such as new fuel) shipped in untreated combustible packing containers may be unpacked in areas containing equipment or systems important to safety if required for valid operating reasons. However, combustible materials are removed from the area immediately following unpacking. Such transient combustible material, unless stored in approved containers, is not left unattended. Loose combustible packing material, such as wood or paper excelsior or polyethylene sheeting, is placed in metal containers with tight-fitting, self-closing metal covers or other approved containers.

(g) Materials that collect and contain radioactivity, such as spent ion exchange resins, charcoal filters, and HEPA filters, are stored in closed metal tanks or containers that are located in areas free from ignition sources or combustibles. These materials are protected from exposure to fires in adjacent areas as well. Consideration is given to requirements for removal of decay heat from entrained radioactive materials.

(h) Temporary power cables used during maintenance outages are treated as transient combustibles and potential ignition sources. Procedures address fire protection for temporary electrical power supply and distribution.

9E.2.1.2 Modifications

Fire prevention elements of the FPP are maintained when plant modifications are made. Modification procedures contain provisions that evaluate the impacts of modifications on the fire prevention design features and programs. Personnel in the

fire protection organization review modifications of SSCs to ensure that fixed fire loadings are not increased beyond those accounted for in the fire hazards analysis, or if increased, suitable protection is provided and the fire hazards analysis is revised accordingly.

9E.2.1.3 Flammable and Combustible Liquids and Gases

The handling, use, and storage of flammable and combustible liquids comply with the provisions of NFPA 30, “Flammable and Combustible Liquids Code.”

Miscellaneous storage and piping for flammable or combustible liquids or gases is controlled to avoid a potential fire exposure hazard to systems important to safety.

Combustible materials are isolated or separated from systems important to safety. When this is not possible because of the nature of the safety system or the combustible material, special protection is provided to prevent a fire from defeating the safety system function. Examples of such combustible materials that may not be separable from the remainder of its system are EDG fuel oil day tanks, turbine-generator oil and hydraulic control fluid systems.

RCP lube oil systems are not applicable to the ABWR.

Diesel fuel oil tanks, turbine-generator lube oil and hydraulic systems are discussed in Subsection 9.5.1.

Bulk gas storage meets the guidelines of Subsection 9E.7.5.

9E.2.1.4 External/Exposure Fire Hazards

An evaluation of external fire hazards including the potential for wildfires is addressed in Subsection 2.2S.3.1.4. Additional relevant discussion is provided in Subsection 9.5.1 for diesel fuel oil storage and COL license information provided in Subsections 9.5.13.9, Applicant Fire Protection Program, and 9.5.13.15, Identification of Chemicals.

9E.2.2 Control of Ignition Sources

Design, installation, modification, maintenance, and operational procedures and practices are used to control potential ignition sources such as electrical equipment (permanent and temporary), hot work activities (e.g., open flame, welding, cutting, and grinding), high-temperature equipment and surfaces, heating equipment (permanent and temporary installation), reactive chemicals, static electricity, and smoking.

9E.2.2.1 Open Flame, Welding, Cutting, and Grinding (Hot Work)

Work involving ignition sources such as welding and flame cutting is done under controlled conditions. Persons performing and directly assisting in such work are trained and equipped to prevent and combat fires, or if this is not possible, a person qualified in fire protection directly monitors the work and functions as a fire watch.

The use of ignition sources is governed by a hot work permit system to control open flame, welding, cutting, brazing, or soldering operations. A separate permit is normally issued for each area where work is to be done. If work continues over more than one shift, the permit should be valid for not more than 24 hours when the plant is operating or for the duration of a particular job during plant shutdown. NFPA 51B, “Standard for Fire Prevention During Welding, Cutting and Other Hot Work,” includes guidance for safeguarding the hazards associated with welding and cutting operations.

9E.2.2.2 Temporary Electrical Installations

Plant administrative controls provide for engineering review of temporary electrical installations. These reviews ensure that appropriate precautions, limitations, and maintenance practices are established for the term of such installations. NFPA 70, “National Electrical Code” is used for guidance on temporary electrical installations.

9E.2.2.3 Other Sources

Open flames or combustion-generated smoke are not permitted for leak testing and similar procedures such as airflow determinations. Procedures and practices provide for control of temporary heating devices. Use of space heaters and maintenance equipment (e.g., tar kettles for roofing operations) in plant areas are controlled and reviewed by the STP 3 & 4 fire protection staff. Engineering procedures and practices provide assurance that temporary heating devices are properly installed according to the UL listing, including required separations from combustible materials and surfaces. Temporary heating devices are placed to avoid overturning and installed in accordance with their listing, including clearance to combustible material, equipment, or construction. Asphalt and tar kettles are located in a safe place or on a fire-resistive roof at a point where they avoid ignition of combustible material below. Continuous supervision is maintained while kettles are in operation and metal kettle covers and fire extinguishers are provided.

9E.2.3 Housekeeping

Administrative controls are established to reduce fire hazards in areas containing SSCs important to safety. These controls govern removal of waste, debris, scrap, oil spills, and other combustibles after completion of a work activity or at the end of the shift. Administrative controls also include procedures for performing and maintaining periodic housekeeping inspections to ensure continued compliance with fire protection controls. Housekeeping practices ensure that drainage systems especially drain hub grills, in areas containing fixed water-based suppression systems remain free of debris to minimize flooding if the systems discharge. RG 1.39, “Housekeeping Requirements for Water-Cooled Nuclear Power Plants,” provides guidance on housekeeping, including the disposal of combustible materials.

9E.2.4 Fire Protection System Maintenance and Impairments

Fire protection administrative controls are established to address the following:

(a) Fire protection features are maintained and tested by qualified personnel. (See Subsection 9E.1.6.1).

(b) Impairments to fire barriers, fire detection, and fire suppression systems are controlled by a permit system. Compensatory measures (see Subsection 9E.1.5) are established in areas where systems are so disarmed.

(c) Test plans that list the individuals and their responsibilities in connection with routine tests and inspections of the fire protection systems are developed. The test plans contain the types, frequency, and detailed procedures for testing. Frequency of testing is based on the code of record for the applicable fire protection system. Procedures also contain instructions on maintaining fire protection during those periods when the fire protection system is impaired or during periods of plant maintenance (e.g., fire watches).

(d) Fire barriers, including dampers, doors, and penetration seals, are routinely inspected. Penetration seals are inspected on a frequency and relative sample basis that provides assurance that the seals are functional. Sample size and inspection frequency are determined by the total number of penetrations and observed failure rates. Inspection frequency ensures that all seals will be inspected every 10 years. Inspections conform to NFPA 25, “Standard for the Inspection, Testing, and Maintenance of Water-Based Fire Protection Systems.”

9E.3 Fire Detection and Suppression

9E.3.1 Fire Detection

This topic is discussed in Subsection 9.5.1.

9E.3.2 Fire Protection Water Supply Systems

This topic is discussed in Subsection 9.5.1

9E.3.3 Automatic Suppression Systems

This topic is discussed in Subsection 9.5.1

9E.3.4 Manual Suppression Systems and Equipment

This topic is discussed in Subsection 9.5.1

9E.3.5 Manual Firefighting Capabilities

9E.3.5.1 Fire Brigade

A site fire brigade trained and equipped for firefighting is established and on site at all times to ensure adequate manual firefighting capability for all areas of the plant containing SSCs important to safety. The fire brigade leader has ready access to keys for any locked doors. Subsection 9E.1.6.4 provides guidance on fire brigade training and qualifications.

9E.3.5.1.1 Fire Brigade Staffing

The fire brigade includes at least five members on each shift. The shift supervisor is not a member of the fire brigade.

9E.3.5.1.2 Equipment

The equipment provided for the brigade consists of personal protective equipment, such as turnout coats, bunker pants, boots, gloves, hard hats, emergency communications equipment, portable lights, portable ventilation equipment, and portable extinguishers. Self-contained breathing apparatus (SCBA) using full-face positive-pressure masks approved by the National Institute for Occupational Safety and Health (approval formerly given by the U.S. Bureau of Mines) is provided for fire brigade, damage control, and control room personnel. At least 10 masks should be available for fire brigade personnel. Control room personnel may be furnished breathing air by a manifold system piped from a storage reservoir if practical. Service or rated operating life should be at least 30 minutes for the self-contained units. STP 3 & 4 conforms to NFPA 1404, “Standard for Fire Service Respiratory Protection Training.”

Fire brigade equipment is stored in accordance with manufacturers recommendations (e.g., firefighter clothing should not be stored where it will be subjected to ultraviolet light from the sun, welding, or fluorescent lights).

At least a 1-hour supply of breathing air in extra bottles is located on the plant site for each self-contained breathing apparatus. In addition, an onsight 6-hour supply of reserve air is provided for the fire brigade personnel and arranged to permit quick and complete replenishment of exhausted air supply bottles as they are returned.

During refueling and maintenance periods, self-contained breathing apparatus is provided near the containment entrances for firefighting and damage control personnel. These units are marked as emergency equipment and are independent of the plant breathing air system provided inside containment and general areas.

9E.3.5.1.3 Procedures and Prefire Plans

Procedures are established to control actions by the fire brigade upon notification by the control room of a fire and to define firefighting strategies. These procedures include the following:

(a) actions to be taken by control room personnel to notify the fire brigade upon report of a fire or receipt of an alarm on the control room fire alarm panel (e.g., announcing the location of the fire over the public address system, sounding fire alarms, and notifying the shift supervisor and the fire brigade leader of the type, size, and location of the fire)

(b) actions to be taken by the fire brigade after notification by the control room of a fire (e.g., assembling in a designated location, receiving directions from the fire brigade leader, and discharging specific firefighting responsibilities, including selection and transportation of firefighting equipment to the fire location, selection of protective equipment, operating instructions for use of fire suppression systems, and use of preplanned strategies for fighting fires in specific areas)

(c) strategies for fighting fires in all plant areas, including the following:

(i) fire hazards in each area covered by the specific prefire plans

(ii) SSCs credited for fire safe shutdown

(iii) fire suppression agents best suited for extinguishing the fires associated with the fire hazards in that area and the nearest location of these suppression agents

(iv) most favorable direction from which to attack a fire in each area in view of the ventilation direction, access hallways, stairs, and doors that are most likely to be free of fire, and the best station or elevation for fighting the fire, as well as all access and egress routes involving locked doors and the appropriate precautions and methods for access specified

(v) plant systems that should be managed to reduce the damage potential during a local fire and the location of local and remote controls for such management (e.g., any hydraulic or electrical systems in the area/zone covered by the specific firefighting procedure that could increase the hazards in the area because of over-pressurization or electrical hazards)

(vi) vital heat-sensitive system components that need to be kept cool while fighting a local fire, in particular, hazardous combustibles that need cooling

(vii) organization of firefighting brigades and the assignment of special duties (including command control of the brigade, transporting fire suppression and support equipment to the fire scenes, applying the extinguishing agent to the fire, communication with the control room, and coordination with outside fire departments, according to job title so that all firefighting functions are covered by any complete shift personnel complement

(viii) potential radiological and toxic hazards in fire areas/zones

(ix) ventilation system operation that ensures desired plant air distribution when the ventilation flow is modified for fire containment or smoke clearing operation

(x) operations requiring control room and shift engineer coordination or authorization

(xi) instructions for plant operators and general plant personnel during fire

(xii) communications between the fire brigade leader, fire brigade, offsite mutual aid responders, control room, and licensee's emergency response organization

Firefighting procedures identify the techniques and equipment for the use of water in fighting electrical cable fires in nuclear plants, particularly in areas containing a high concentration of electric cables with plastic insulation in accordance with NFPA 1620, “Recommended Practice for Pre-Incident Planning.”

9E.3.5.1.4 Performance Assessment/Drill Criteria

Fire brigade drills are performed so that the fire brigade can practice as a team.

Drills are performed quarterly for each shift fire brigade. Each fire brigade member should participate in at least two drills annually.

A sufficient number of these drills, but not less than one for each shift's fire brigade per year, are unannounced to determine the firefighting readiness of the plant's fire brigade, brigade leader, and fire protection systems and equipment. Persons planning and authorizing an unannounced drill ensure that the responding shift fire brigade members are not aware that a drill is being planned until it has begun. At least one drill per year is performed on a “back shift” for each shift's fire brigade.

Drills are preplanned to establish training objectives and critiqued to determine how well the training objectives have been met. Members of the management staff responsible for plant safety and fire protection should plan and critique unannounced drills. Performance deficiencies of a fire brigade or of individual fire brigade members should be remedied by scheduling additional training for the brigade or members.

Unsatisfactory drill performance should be followed by a repeat drill within 30 days.

The local fire department is invited to participate in drills at least annually.

At 3-year intervals, qualified individuals independent of STPNOC critique a randomly selected unannounced drill. Drills include the following:

(a) The effectiveness of the fire alarms, time required to notify and assemble the fire brigade, and selection, placement, and use of equipment and firefighting strategies should be assessed.

(b) Each brigade member's knowledge of his or her role in the firefighting strategy for the area assumed to contain the fire, and the brigade member's conformance with established plant firefighting procedures and use of firefighting equipment, including self-contained emergency breathing apparatus, communication, lighting, and ventilation should be assessed.

(c) The simulated use of firefighting equipment required to cope with the situation and type of fire selected for the drill should be evaluated. The area and type of fire chosen for the drill should differ from those used in the previous drills so that brigade members are trained in fighting fires in various plant areas. The situation selected should simulate the size and arrangement of a fire that could reasonably occur in the area selected, allowing for fire development during the time required to respond, obtain equipment, and organize for the fire, assuming loss of automatic suppression capability.

(d) The brigade leader's direction of the firefighting effort should be assessed with regard to thoroughness, accuracy, and effectiveness.

Drill records are retained for a period of 3 years (See Subsection 9E.1.6.4 for additional discussion on drill records.)

9E.3.5.2 Offsite Manual Firefighting Resources

9E.3.5.2.1 Capabilities

The local offsite fire departments that provide back up manual firefighting resources should have the following capabilities:

(a) Personnel and equipment with capacities consistent with those assumed in the plant's fire hazards analysis and prefire plans

(b) Hose threads or adapters to connect with onsite hydrants, hose couplings, and standpipe risers (Also see Subsection 9E.3.4.2).

9E.3.5.2.2 Training

Local offsite fire department personnel who provide back up manual firefighting resources should be trained in the following:

(a) Operational precautions when fighting fires on nuclear power plant sites and the need for radiological protection of personnel and the special hazards associated with a nuclear power plant site

(b) The procedures for notification and expected roles of the offsite responders

(c) Site access procedures and the identity (by position and title) of the individual in the onsite organization who will control the responders' support activities (offsite response support personnel should be provided with appropriate identification cards where required)

(d) Fire protection authorities, responsibilities, and accountabilities with regard to responding to a plant fire, including the fire event command structure between the plant fire brigade and offsite responders

(e) Plant layout, plant fire protection systems and equipment, plant fire hazards, and prefire response plans and procedures

9E.3.5.2.3 Agreement/Plant Exercise

STP 3 & 4 establishes written mutual aid agreements with offsite fire departments. Plant procedures delineate fire protection authorities, responsibilities, and accountabilities with regard to responding to plant fire or emergency events, including the fire event command structure between the plant fire brigade and offsite responders.

The plant fire brigade drill schedule should provide for periodic local fire department participation (at least annually). These drills should effectively exercise the fire event command structure between the plant fire brigade and offsite responders. (See Subsection 9E.3.5.1.4 for guidance on conduct and evaluation of fire brigade drills.)

9E.4 Building Design/Passive Features

This topic is discussed in Subsection 9.5.1

9E.5 Safe-Shutdown Capability

The systems required for safe shutdown are discussed in Section 7.4 and the fire protection design features for safe shutdown are discussed in detail in Subsection 9.5.1.

9E.5.1 Post-Fire Safe-Shutdown Performance Goals

This topic is discussed in Section 7.4 and Subsection 9.5.1.

9E.5.2 Cold Shutdown and Allowable Repairs

This topic is discussed in Section 19Q.6.

9E.5.3 Fire Protection of Safe-Shutdown Capability

The systems required for safe shutdown are discussed in Section 7.4 and the fire protection design features for protecting safe-shutdown capability are discussed in detail in Subsection 9.5.1.

Additionally, for Operator Manual Actions, in the event that the final as-built fire safe shutdown analysis performed to meet ITAAC 2.15.6 identifies the need for a operator manual action(s) not previously described in the DCD, then the applicable regulatory guidance associated with operator manual actions (i.e., RG 1.189, Revision 1, Fire Protection for Nuclear Power Plants, paragraph 5.3.3 Operator Manual Actions) will be utilized. In addition the guidance provided in NUREG 1852, Demonstrating the Feasibility and Reliability of Operator Manual Actions in Response to Fire, will be utilized to demonstrate that the operator manual actions are feasible and can be reliably accomplished.

9E.5.4 Alternative and Dedicated Shutdown Capability

The remote shutdown system is described in Subsections 7.4.1.4, 9.5.1.1 and 9.5.1.1.2.

9E.5.5 Post-Fire Safe-Shutdown Procedures

Procedures for effecting safe shutdown reflect the results and conclusions of the safe-shutdown analysis. Time-critical operations for effecting safe shutdown identified in the safe-shutdown analysis and incorporated in post-fire procedures are validated.

9E.5.5.1 Safe-Shutdown Procedures

Post-fire safe-shutdown operating procedures are developed for those areas where alternative or dedicated shutdown is required.

9E.5.5.2 Alternative/Dedicated Shutdown Procedures

Procedures describe the tasks to implement alternative/dedicated shutdown capability when offsite power is available and when offsite power is not available for 72 hours.

These procedures address necessary actions to compensate for spurious actuations and high-impedance faults if such actions are identified in the Fire Hazards Analysis (Section 9A) to effect safe shutdown.

Procedures governing return to the control room following evacuation address the following conditions:

(a) The fire has been extinguished and so verified by appropriate fire protection personnel.

(b) The control room has been deemed habitable by appropriate fire protection personnel and the shift supervisor.

(c) Damage has been assessed and, if necessary, corrective action has been taken to ensure that necessary safety, control, and information systems are functional (some operators may assist with these tasks), and the shift supervisor has authorized return of plant control to the control room.

(d) Turnover procedures that ensure an orderly transfer of control from the alternative/dedicated shutdown panel to the control room have been completed.

9E.5.5.3 Repair Procedures

For the ABWR, repair procedures are not necessary to achieve safe shutdown. See discussion in Subsection 9.5.1.1.2 and Section 19Q.6.

9E.5.6 Shutdown/Low-Power Operations

The design features providing for fire protection during nonpower operation are discussed in Section 19Q ABWR Shutdown Risk Assessment.

9E.6 Fire Protection for Areas Important to Safety

The following areas were outside the scope of the ABWR Standard Plant Design and are addressed in Subsection 9.5.13.9 (COL License Information Item 9.26):

(a) Main Transformer

(b) Equipment entry lock

(c) Fire protection pumphouse

(d) Ultimate heat sink

9E.7 Protection of Special Fire Hazards Exposing Areas Important to Safety

9E.7.1 Reactor Coolant Pump Oil Collection

This topic is not applicable to the ABWR.

9E.7.2 Turbine/Generator Building

This topic is discussed in Subsection 9.5.1.

9E.7.3 Station Transformers

Fire protection for the Main Transformer was outside the scope of the ABWR Standard Plant Design and is addressed in Subsection 9.5.13.9 (COL License Information Item 9.26).

9E.7.4 Diesel Fuel Oil Storage Areas

This topic is discussed in Subsection 9.5.1.

9E.7.5 Flammable Gas Storage and Distribution

To reduce the possibility of wall penetration in the event of a container failure, care is taken to locate high-pressure gas storage containers with the long axis parallel to building walls. Acetylene-oxygen gas cylinders are not stored in areas that contain or expose equipment important to safety or the fire protection systems that serve those equipment areas.

The fire hazards associated with bulk storage of hydrogen for generator cooling is addressed in Table 2.2S-2, STP Onsite Chemical Storage and Table 2.2S-6, Onsite chemical Storage-Disposition. The bulk storage system meets the guidance of EPRI Report NP-5283-SR-A. The bulk storage system is described in Section 10.2.

9E.7.6 Nearby Facilities

An evaluation of external fire hazards including the potential for wildfires is addressed in Subsection 2.2S.3.1.4 which indicated that no special FPP provisions are required for the threat of fire or explosion from nearby facilities.

9E.8 Fire Protection for New Reactors

9E.8.1 General

9E.8.2 Enhanced Fire Protection Criteria

As discussed in Subsection 9.5.1.1.2, a principal feature of the ABWR design approach to fire protection is providing three complete divisions of safety-related cooling systems with only one division located in any single fire area. Complete burnout of any fire area without recovery will not prevent safe shutdown of the plant; therefore, complete burnout of a fire area can be tolerated (divisional separation is not practical in the case of the inerted containment, the control room and the remote shutdown panel rooms and the basis for acceptability of these areas is discussed in more detail in Subsection 9.5.1.1.2).

9E.8.3 Passive Plant Safe-Shutdown Condition

Not applicable; the ABWR is an evolutionary design with active safety features.

9E.8.4 Applicable Industry Codes and Standards

The NFPA codes and standards of record related to the design and installation of fire protection systems and features for the certified ABWR are those referenced in Section 1.8.

For the FPP of STP 3 & 4, the codes and standards of record will also be those referenced in Section 1.8 except for FPP programmatic aspects that are not addressed in the ABWR certified design. These programmatic aspects of the FPP will be in accordance with those NFPA codes and standards, listed in this Appendix, in effect 180 days before the submittal of the STP 3 & 4 COL application. In the event that a later code or standard has a programmatic aspect that cannot be practically implemented due to design or installation features of the earlier code or standard, then the earlier code or standard will apply.

9E.8.5 Other New Reactor Designs

This topic is not applicable to the ABWR.

9E.8.6 Fire Protection Program Implementation Schedule

The elements of the FPP described in this program that are necessary to protect new fuel from the adverse affects of a fire in the new fuel storage area or adjacent areas will be implemented prior to the receipt of new fuel. Other required elements of the FPP will be implemented prior to initial fuel load.

9E.8.7 Fire Protection for Nonpower Operation

The design features providing for fire protection during nonpower operation are discussed in Section 19Q.6, Fires During Maintenance.

9E.9 Fire Protection for License Renewal

Any future application for license renewal of STP 3 & 4 will be accompanied by appropriate evaluations of fire protection systems as may be required by applicable regulations.

10.0 Steam and Power Conversion System

The information in this section of the reference ABWR DCD, including all subsections, tables and figures, is incorporated by reference with the following departures and supplements.

STD DEP T1 3.4-1

STP DEP 9.2-3 (Figure 10.1-1)

STP DEP 10.1-1

STP DEP 10.1-2 (Figure 10.1-1)

STP DEP 10.1-3 (Figure 10.1-2)

STP DEP 10.1-4 (Figure 10.1-3)

STP DEP 10.2-1 (Table 10.1-1, Figure 10.1-1)

STP DEP 10.4-2 (Table.10.1-1)

STD DEP 10.4-5 (Table 10.1-1)

10.1 Summary Description

STP DEP 10.2-1

Steam, generated in the reactor, is supplied to the high-pressure turbine and the second stage reheaters of the *steam moisture separators/reheaters.* Extraction steam from the high-pressure turbine is supplied to the first stage reheaters of the moisture separators/reheaters. *Steam leaving the high-pressure turbine passes through a combined moisture separator/reheater prior to entering the low pressure turbines. The moisture separator drains, steam reheater drains, and the drains from the two high pressure feedwater heaters are pumped back to the reactor feedwater pump suction by the heater drain pumps. The low pressure feedwater heater drains are cascaded to the condenser.*

STP DEP 9.2-3

STD DEP 10.4-5

Steam exhausted from the low-pressure turbines is condensed and deaerated in the condenser. The condensate pumps take suction from the condenser hotwell and deliver the condensate through the filters and demineralizers, gland steam condenser, steam jet air ejector condensers, ~~*offgas recombiner condensers,*~~ *and* to the suction of the condensate booster pumps. The condensate booster pumps discharge condensate *through the low-pressure feedwater heaters to the reactor feed pumps. The reactor feed pumps discharge through the high pressure feedwater heaters to the reactor.*

The conceptual design information in this section of the reference ABWR DCD is replaced with the following site-specific supplemental information.

Major S&PC System design features are summarized in Table 10.1-1. The system main ~~conceptual~~ features are illustrated on Figure 10.1-1~~, assuming a triple pressure condenser. This type of condenser and other site dependent ABWR plant features and parameters are reported herein based on typical central U.S. site conditions. They are given here to more completely define the ABWR Turbine Island standard design and to be used as references in reviewing future ABWR plant-specific licensing submittals, and confirming that such submittals are indeed consistent with the standard design. Nothing in the ABWR Standard Plant design is meant to preclude the use of a once-through cooling system and a single pressure condenser nor will such changes affect the Nuclear Island~~.

STP DEP 10.1-1

~~*The inlet pressure at the turbine main steam valves will not exceed rated pressure, except when operating above 95% of the maximum guaranteed turbine flow. It will be permissible to increase the inlet pressure to 103% of rated pressure, provided the control valve position is adjusted so that the resulting steam flow does not exceed the steam flow that is obtained when operating at rated pressure with control valves wide open.*~~ The inlet pressure at the turbine main steam valves reflects reactor power, steam line flow and pressure regulator programming, but never exceeds the pressure for which the turbine components and steam lines are designed.

STD DEP T1 3.4-1

Non-safety-related instrumentation is provided to measure and control flow, pressure, differential pressure, temperature, and level throughout the steam and condensate system. The instrumentation provides input signals to the ~~plant computer, recorders and control systems~~ Plant Information and Control System which maintain the normal operation of the plant.

Table 10.1-1 Summary of Important Design Features and Performance Characteristics of the Steam and Power Conversion System

Nuclear Steam Supply System, Full Power Operation	
Rated reactor core power, MWt	*3,926*
Rated NSSS power, MWt	*3,919*
Reactor steam outlet pressure, MPaA	*7.17*
Reactor nominal outlet steam moisture,%	*0.1*
Reactor inlet feedwater temperature, °C	*215.6*
Turbine-Generator	
Nominal Rating, MWe	*~1,400*
Turbine type	*Tandem compound, six flow, 132.08 cm last-stage bucket* *1 high pressure turbine* *3 low pressure turbines*
Operating speed, rad/s	*188.5*
Turbine throttle steam pressure, MPaA	*6.79*
Throttle steam nominal moisture, %	*0.4*
Moisture Separator/Reheaters (MSRs)	
Number of MSRs per unit	~~*4*~~ **2**
Stages of moisture separation	*1*
Stages of reheat	~~*1*~~ **2**
Main Condenser (Site Dependent)	
Type	~~*Multiple*~~ **Single** *pressure*
Design duty, kW	~~*~25.49 x 10^5*~~ **251.50 x 10^4**
Circulating water flow rate, m^3/h	~~*~136290*~~ **272,550**
Circulating water temperature rise, °C	~~*~16.8*~~ **7.99**
Condensate Pumps	
Number of pumps	~~*4 50%*~~ **4 x 33%** *(3 operating and 1 standby)*
Pump type	*Vertical, centrifugal multi-stage*
Driver type	~~*Fixed speed motor*~~ **Induction motor**
Design Conditions:	
Normal flow, m^3/h	~~*~1817.2*~~ **~2300**
Total head, m	~~*426.72*~~ **~ 150**
Rated motor power, kW	~~*~3800*~~ **~ 1300**

Table 10.1-1 Summary of Important Design Features and Performance Characteristics of the Steam and Power Conversion System (Continued)

Condensate Booster Pumps	
Number of Pumps	**4x33% (3 operating, 1 standby)**
Pump Type	**Horizontal, centrifugal, multi-stage**
Driver Type	**Induction motor**
Design Conditions:	
Normal Flow, m^3/h	**~2300**
Total Head, m	**~280**
Rated Motor Power, kW	**~2300**
Feedwater Heaters	
Low Pressure Heaters	
a. No. 1	
Number per stage	*3*
Stage pressure, kPaA	~~*24.5*~~ **43.5**
Duty per shell, kW	~~*22.4*~~ **59.8** *x* 10^3
Drain Cooler Duty per shell, kW	**13.5 x 10^3**
b. No. 2	
Number per stage	*3*
Stage pressure, kPaA	~~*60.8*~~ **90.0**
Duty per shell, kW	~~*48.85*~~ **38.4** *x* 10^3
c. No. 3	
Number per stage	*3*
Stage pressure, kPaA	~~*147*~~ **249**
Duty per shell, kW	~~*51.88*~~ **62.8** *x* 10^3
d. No. 4	
Number per stage	*3*
Stage pressure, kPaA	~~*330*~~ **439**
Duty per shell, kW	~~*54.90*~~ **40.9** *x* 10^3
High Pressure Heaters	
e. No. 5	
Number per stage	*2*
Stage pressure, kPaA	~~*1,353*~~ **1244**
Duty per shell, kW	~~*171.55*~~ **125.3** *x* 10^3
f. No. 6	
Number per stage	*2*
Stage pressure, kPaA	~~*2,311*~~ **2250**
Duty per shell, kW	~~*128.73*~~ **136.5** *x* 10^3

Table 10.1-1 Summary of Important Design Features and Performance Characteristics of the Steam and Power Conversion System (Continued)

Reactor Feedwater Pumps	
Number of pumps	*3 normally operating (33-~~65~~%),* **1 standby,** *variable speed*
Pump type	*Horizontal, centrifugal, single stage*
Driver type	*electric motors*
Design conditions:	
Main pumps:	
Normal flow, m^3/h	*~~4202.27~~* **~3300**
Total head, m	*~~640.08~~* **~ 760**
Rated motor power, kW	*~~11,200~~* **~ 8400**
Heater Drain Pumps	
Number of pumps	*~~2 x 50%~~* **4 x 33% (3 operating, 1 standby)**
Pump type	*Horizontal, centrifugal*
Driver type	*~~Fixed speed motor~~* **Induction Motor**
Design conditions:	
Normal flow, m^3/h	*~~1362.9~~* **~1250**
Total head, m	*~~228~~* **~ 370**
Rated motor power, kW	*~~1850~~* **~ 1600**
High Press. Heater Drain Tank	
Number of tanks	~~2~~ **1**
Design, pressure ~~kPa~~ ***MPaG***	*~~1,517~~* **1.67 & Full Vac.**
Tank capacity, **m^3**	*~~56,700 L*~~* **~ 98**
Low Press. Heater Drain Tanks	
Number of tanks	**3**
Design, pressure MPaG	**0.35 & Full Vac.**
Tank capacity, m3	**~4**

~~* Nominal depending on specific Turbine Building layout considerations~~

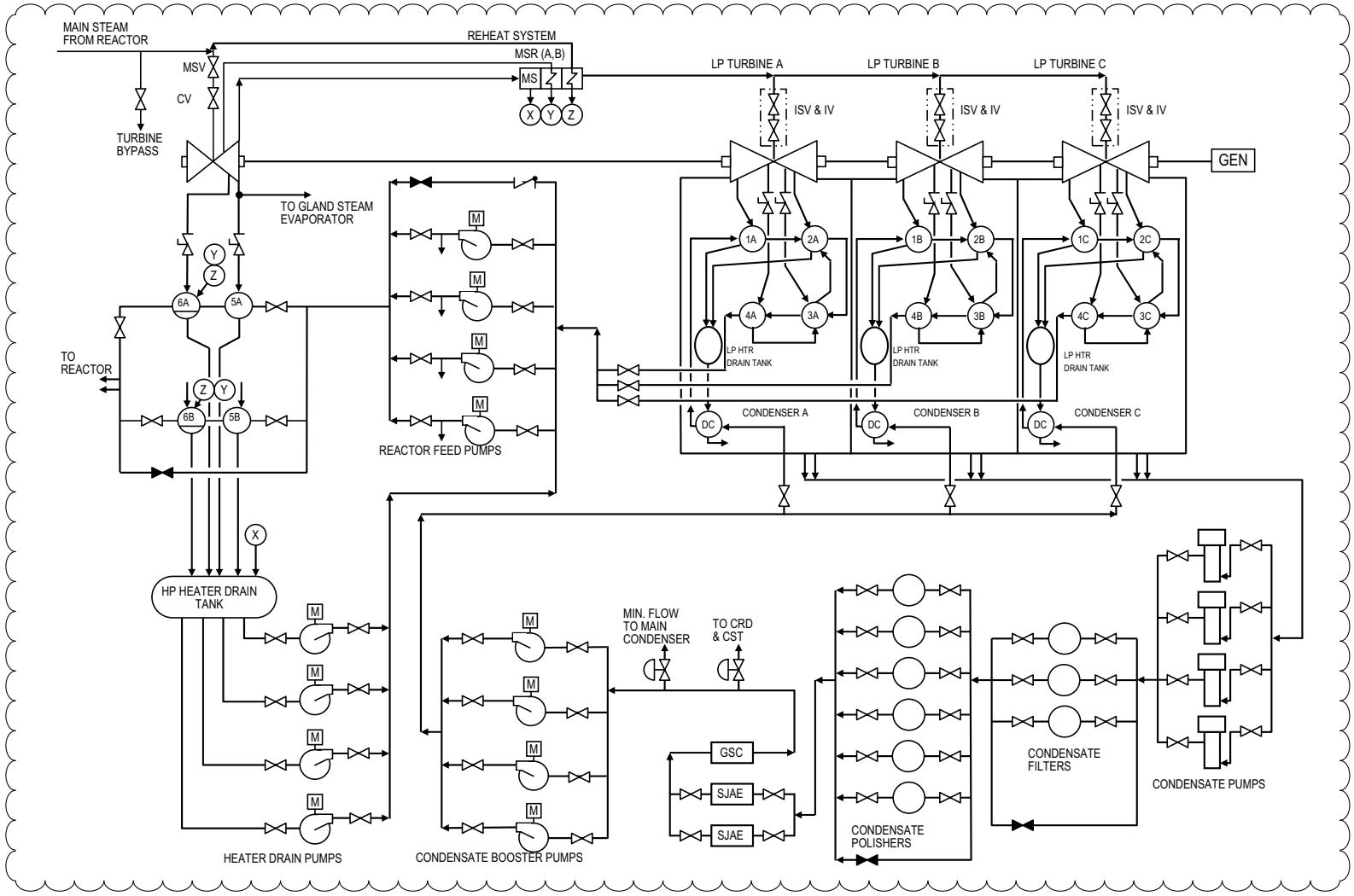

Figure 10.1-1 Reference Steam and Power Conversion System

The following figures are located in Chapter 21

- ***Figure 10.1-2 Reference Heat Balance for Guaranteed Reactor Rating***
- ***Figure 10.1-3 Reference Heat Balance for Valves-Wide-Open (VWO)***

10.2 Turbine Generator

The information in this section of the reference ABWR DCD, including all subsections, tables and figures, is incorporated by reference with the following departures and supplements.

STD DEP T1 2.4-2

STP DEP 1.1-2 (Figure 10.2-4)

STP DEP 10.2-1 (Figure 10.2-4)

STP DEP 10.2-2

STP DEP 10.2-3

STP DEP 10.2-4

STD DEP Admin (Figure 10.2-1)

10.2.1.2 Power Generation Design Bases

STP DEP 10.2-2

Power Generation Design Basis Three*—The T-G is designed to accept a sudden loss of full load ~~without exceeding design overspeed~~* with sufficient margin to the overspeed trip*.*

Power Generation Design Basis Five*—The failure of any single component will not cause the rotor speed to exceed the ~~design speed~~* Emergency Overspeed (EOS) trip setpoint*.*

STP DEP 10.2-3

Power Generation Design Basis Six*~~—The T-G is designed to support the plant availability goals by utilizing 2/3 or 2/4 coincident trip logic for all but the vibration trips (which are at least 2/2 per bearing). Similarly, all turbine control functions which are required for power generation will use at least dual redundant controllers and triply redundant control inputs.~~* Turbine control functions required for turbine protection possess sufficient redundancy such that failure of a single component input does not compromise the integrity of the turbine protection system.

10.2.2.1 General Description

STP DEP 10.2-1

The turbine-generator consists of an 188.5 rad/s (1800 RPM) *turbine, moisture separator/reheaters, generator, exciter, controls, and associated subsystems.*

The turbine consists of a double-flow, high-pressure unit, and three double flow low-pressure units in tandem. The high-pressure unit has ~~a single stage of steam~~ extraction

points for reheater reheating steam and high pressure feedwater heating. *Moisture separation and reheating of the high-pressure turbine exhaust steam is performed by* ~~*four*~~ two *combined moisture separator/reheaters (MSRs).* ~~*Two MSRs are*~~ A MSR is *located on each side of the T-G centerline. The steam passes through the low-pressure turbines, each with four extraction points for the four low-pressure stages of feedwater heating, and exhausts into the main condenser. In addition to the* moisture separators in the *external MSRs, the* ~~*turbines are designed to separate water from the steam and drain it to the next lowest extraction point feedwater heater*~~ turbine steam path has provisions for removing some additional moisture and routing it to extraction lines.

The generator is a direct driven, three-phase, 60 Hz, 188.5 rad/s (1800 RPM) *synchronous generator with a water-cooled* ~~*stator*~~ armature winding *and hydrogen cooled rotor.*

The turbine-generator uses a digital monitoring and control system which, in coordination with the turbine Steam Bypass and Pressure Control System, controls the turbine speed, load, and flow for startup and normal operations. The control system operates the turbine stop valves, control valves, and ~~*combined*~~ *intermediate* stop and intercept *valves* ~~*(CIVs)*~~*. T-G supervisory instrumentation is provided for operational analysis and malfunction diagnosis.*

Automatic control functions are programmed to protect the Nuclear Steam Supply System through appropriate corrective actions (Section 7.7).

T-G accessories include the bearing lubrication oil system, electrohydraulic control (EHC) system, turbine hydraulic system, *turning gear, hydrogen* gas control ~~*and CO2*~~ *system, seal oil system, stator cooling water system, exhaust hood spray system, turbine gland sealing system,* MSR reheater heating steam system *and turbine supervisory instrument (TSI) system.*

STD DEP Admin

The T-G unit and associated piping, valves, and ~~*controls*~~ instruments *are located completely within the Turbine Building.* ~~*There are no safety-related systems or components*~~ The safety-related instruments *located within the Turbine Building* ~~*with the exception of*~~ are *the* safety-related *Reactor Protection System (RPS) sensors on the T-G unit*~~*. The safety-related switches or transducers*~~ *used to detect fast closure of the turbine* ~~*main stop and*~~ *control valves* and closure of the main stop valves and the Leak Detection and Isolation System (LDS) sensors used to detect ~~*and high*~~ *high* main *condenser* ~~*back*~~ shell *pressure*, low main steam header pressure, and main steam line leakage. The safety-related instrumentation is ~~*are*~~ *fail safe, hence any local failure associated with the T-G unit will not adversely affect any safety-related equipment. Failure of T-G equipment cannot preclude safe shutdown of the reactor.*

STD DEP T1 2.4-2

The Turbine Building contains the safety-related electrical switchgear and trip breakers for the condensate pumps for the mitigation of a postulated feedwater line break in accordance with Subsection 8.3.1.1.1.

10.2.2.2 Component Description

STP DEP 10.2-1

Main Stop and Control Valves*—Four high-pressure main stop and control valves admit steam to the high-pressure (HP) turbine. The primary function of the main stop valves is to quickly shut off the steam flow to the turbine under emergency conditions. The primary function of the control valves is to control steam flow to the turbine in response to the turbine control system.*

The main stop valves are operated in an open-closed mode either by the emergency trip, fast acting valve for tripping, or by a small solenoid valve for testing. The disks are totally unbalanced and cannot open against full differential pressure. A bypass is provided to pressurize the below seat areas of the four valves. Springs are designed to close the main stop valve in approximately ~~0.20~~0.30 second under the emergency conditions listed in Subsection 10.2.2.5.

Each stop valve contains a permanent steam strainer to prevent foreign matter from entering the control valves and turbine.

The control valves are designed to ensure tight shutoff. The valves are of sufficient size, relative to their cracking pressure, to require a partial balancing. Each control valve is operated by a single acting, spring-closed servomotor opened by a high pressure fire-resistant fluid supplied through a servo valve. The control valve is designed to close in approximately ~~0.20~~0.30 second.

Moisture Separator Reheaters*~~—Four~~Two horizontal cylindrical-shell, combined moisture separator/reheaters (MSRs) are installed in the steam path between the high and low pressure turbines. The MSRs serve to dry and reheat the HP turbine steam exhaust (crossaround steam), before it enters the low-pressure turbines. This improves cycle efficiency and reduces moisture-related erosion and corrosion in the low-pressure turbines. Crossaround steam is piped into the bottom of the MSR. Moisture is removed in chevron-type moisture separators, and is drained to the ~~moisture separator drain tank and from there to the heater drain tank~~ appropriate stage of feedwater heating. ~~The dry crossaround steam next passes upward across the reheater which is supplied with main steam. Finally, the crossaround steam is routed to the combined intermediate valves (CIVs), which are located just upstream of the low-pressure turbines inlet nozzles.The reheaters drain, via drain tanks, to the forward pumped heater drain system, which discharges to the reactor feedwater pump suction. Safety valves are provided on the MSR for overpressure protection.~~ The steam next passes upward across the two reheater stages. Heating steam to the first reheater stage is supplied by extraction steam and heating steam to the second reheater stage is supplied with main steam. Reheated steam is routed to the intermediate stop and*

intercept valves, which are located just upstream of the low-pressure turbine inlet nozzles. Relief valves are provided on the MSR for overpressure protection.

Combined Intermediate ~~**Stop and Intercept**~~ ***Valves*** **(Intermediate Stop Valves and Intercept Valves)**— ~~*Two combined intermediate valves (CIVs) are provided for each LP turbine, one in each steam supply line, called the hot reheat line.*~~ *The* combined intermediate valves (*CIV*s) *consist*~~s~~ *of two valves—the intercept valve and the intermediate stop valve, which share a common casing. Although they utilize a common casing, these valves have entirely separate operating mechanisms and controls.* ~~*The function of the CIVs is to protect the turbine against overspeed from steam and water energy stored between the main stop and control valves and the CIVs. One CIV is located on each side of each LP turbine.*~~ Hydraulically operated intermediate stop valves (ISVs) and intercept valves (IVs) are provided in each hot reheat line just upstream of the Low Pressure (LP) turbine inlets. Upon loss of load, the intercept valves first close then throttle steam to the LP turbine, as required to control speed. The intermediate stop valves close on a turbine trip. The intermediate stop valves and intercept valves are designed to rapidly close to control turbine overspeed.

Steam from the MSRs ~~*enters the single inlet of each valve casing, passes through the permanent basket strainer, past the intercept valve and stop valve disks, and*~~ *enters the LP turbine through* ~~*a single inlet*~~ these valves~~*. The CIVs*~~ which *are located as close to the LP turbine as possible to limit the amount of uncontrolled steam available for overspeeding the turbine. Upon loss of load, the intercept valve first closes then throttles steam to the LP turbine, as required to control speed and maintain synchronization.* ~~*It is*~~ These valves are *capable of opening against full system pressure*~~*. The intermediate stop valves close only if the intercept valves fail to operate properly. These valves are capable of opening against a pressure differential of approximately 15% of the maximum expected system pressure. The intermediate stop valve and intercept valve*~~ and *are designed to close in approximately 0.2 second.*

Low-Pressure Turbines*—Each LP turbine receives steam from two* ~~*CIVs*~~ hot reheat lines*. The steam* ~~*is expanded*~~ expands *axially across several stages of stationary and moving* ~~*buckets*~~ blades*.* ~~*Turbine stages are numbered consecutively, starting with the first HP turbine stage.*~~

~~*Extraction steam from the LP turbines supplies the first four stages of feedwater heating. A fifth extraction stage may be provided to remove moisture and protect the last-stage buckets from erosion induced by water droplets. This extraction is drained directly to the condenser.*~~

Extraction Non-return Valves*—Upon loss of load, the steam contained downstream of the turbine extractions could flow back into the turbine, across the remaining turbine stages, and into the condenser. Associated condensate could flash to steam under this condition and contribute to the backflow of steam or could be entrained with the steam flow and damage the turbines.* ~~*Extraction n*~~N*on-return valves are* ~~*installed in the*~~ employed in selected *extraction lines to* ~~*the first, second, third and, if required, forth stage of turbine extractions to guard against this backflow and the resulting potential damage due to water entrainment or overspeed condition*~~ prevent overspeeding*.*

The non-return valves are spring assisted closure type check valves. Spring assisted non-return valves are held open with instrument air. They close on loss of air. When the air is released the springs act to close the valves. Closure time is within 2 seconds from tripping the air relay dump valve. If the air relay dump valve fails to vent the air to the non-return valve actuators, they will close on reverse steam flow.

There are thirteen (13) extraction non-return valves. Seven are located on high pressure extraction steam lines to the two No. 5 and two No. 6 feedwater heaters, the two MSRs, and the turbine gland seal evaporator. Six are located on low pressure turbine extraction lines to the three No. 3 and three No. 4 low pressure heaters. A single failure of an extraction nonreturn valve will not cause the turbine speed to exceed its design overspeed of 120% of rated speed after a full load rejection.

Non-return valves are not used on extraction lines to the three No. 1 and three No. 2 low pressure heaters and, because of the relatively low potential energy for increasing the turbine speed, are not required for turbine overspeed protection.

Generator*—The generator is a direct-driven, three-phase, 60 Hz, 188.5 rad/s* (1800 RPM)*, four-pole synchronous generator with water-cooled stator and hydrogen cooled rotor.*

The rotor is manufactured from a ~~one-piece~~ forging and includes layers of field windings embedded in milled slots. The windings are held radially by ~~steel~~ slot wedges at the rotor outside diameter. The wedge material maintains its mechanical properties at elevated temperature. The magnetic field is generated by DC power which is fed to the windings through collector rings located outboard of the main generator bearings. The rotor body and shaft is machined from a ~~single,~~ solid steel forging. Detailed examinations include:

(1) material property checks on test specimens taken from the forging;

(2) photomicrographs for examination of microstructure;

(3) magnetic particle and ultrasonic examination;

(4) ~~surface finish tests of slots for indication of a stress riser~~ residual stress measurement at vendor factory test.

STP DEP 1.1-2

STP DEP 10.2-4

Bulk Hydrogen System*—The bulk hydrogen and CO_2 system is illustrated on Figure 10.2-4. The hydrogen system is designed to provide the necessary flow and pressure at the main generator for purging carbon dioxide during startup and supply makeup hydrogen for generator leakage during normal operation.*

The bulk hydrogen system utilizes the guidelines given in EPRI report NP-5283-SR-A with respect to these portions of the guidelines involving hydrogen that do not deal

specifically with the HWC system. Specifically, the bulk hydrogen system piping and components will be located to reduce risk from their failures. A single bulk hydrogen storage facility will be used to store hydrogen compressed gas cylinders for STP 3 & 4. *The bulk hydrogen storage is located outside ~~but near~~ the Turbine Building* and at least 100m from any safety-related building. *The hydrogen lines are provided with a pressure reducing station that limits the maximum flow to less than 100 standard cubic meters per minute before entering the Turbine Building. Equipment and controls used to mitigate the consequences of a hydrogen fire/explosion will be designed to be accessible and remain functional during the postulated postaccident condition. The design features and/or administrative controls shall be provided to ensure that the hydrogen supply is isolated when normal building ventilation is lost.*

10.2.2.3 Normal Operation

STP DEP 10.2-1

During normal operation, the main stop valves ~~and CIVs~~ , intermediate stop valves and intercept valves *are wide open. Operation of the T-G is under the control of the Electro-Hydraulic Control (EHC) System. The EHC System is comprised of three basic subsystems: the speed control unit, the load control unit, and the flow control unit. The normal function of the EHC System is to generate the position signals for the four main stop valves, four main control valves, ~~and~~ six ~~CIVs~~* intermediate stop valves and six intercept valves.

10.2.2.4 Turbine Overspeed Protection System

The information in this subsection of the reference ABWR DCD is replaced in its entirety with the following information.

STP DEP 10.2-3

The electro-hydraulic control (EHC) system provides the normal speed control for the turbine and comprises a first line of defense against turbine overspeed. This system includes the main steam control valves (CV), intermediate steam intercept valves (IV), and fast-acting valve-closing functions within the EHC system. The normal speed control unit utilizes three speed signals. Loss of any two of these speed signals initiates a turbine trip via the Emergency Trip System (ETS). An increase in speed above setpoint tends to close the control and intercept valves in proportion to the speed increase. The EHC fully shuts off steam to the high pressure turbine (HP) at approximately 105% of the turbine rated speed by closing the turbine control valves, and the EHC fully shuts off steam to the low pressure turbines (LPs) at approximately 107% of the turbine rated speed by closing the intercept valves.

Rapid turbine accelerations resulting from a sudden loss of load at higher power levels normally initiate the fast-acting solenoids via the speed control system's Power-Load Unbalance (PLU) function, to rapidly close the control valves and intercept valves irrespective of the current turbine speed. Normal speed control is supplemented by the PLU function which is implemented in the EHC, and together they form the first line of defense against turbine overspeed. The PLU uses the difference between turbine

power and load indications, which are high pressure turbine exhaust steam pressure and generator current, respectively, to cause fast closure of the turbine control valves and intercept valves when the difference between power and load exceeds approximately 40%, to limit overspeed in the event of a full load rejection. A load rejection below approximately 40% power (reactor trip threshold) will not result in a PLU actuation and subsequent control valve fast closure. Instead, it will result in normal control valve closure under normal servo control to prevent turbine speed from exceeding the primary overspeed trip setpoint of 110%; and will result in opening of the turbine bypass valves for reactor pressure control.The normal speed control system, including the PLU function, is designed to limit peak overspeed resulting from a loss of full load, to at least 2% below the overspeed trip set point. Typically, this peak speed is in a range of 105-108% of rated speed, and the overspeed trip set point is typically close to 110% of rated speed. All turbine steam control and intercept valves are fully testable during normal operation. The fast closing feature, provided by action of the fast-acting solenoids, is testable during normal operation.

If the normal speed control and the PLU function should fail, the turbine primary and emergency overspeed trip devices close the steam admission valves (turbine stop, control, intermediate stop and intercept valves) and the extraction steam non-return valves through the actuation of the air relay dump valve. This turbine overspeed protection system, which includes the diverse primary and emergency turbine overspeed protection functions, comprises the second line of defense against turbine overspeed. This overspeed protection system is designed to ensure that even with failure of the normal speed control system, the resulting turbine speed does not exceed 120% of rated speed. In addition, the components and circuits comprising the turbine overspeed protection system are testable when the turbine is in operation.

The primary trip function is independent and diverse from the emergency trip function as explained below (refer to Figure 10.2-5, Turbine Overspeed Trip System Functional Diagram). Two-out-of-three logic is employed in both the primary and emergency overspeed trip circuitry. Each trip function can de-energize its associated trip pilot valve solenoids of the electro-hydraulic Emergency Trip Device (ETD). The ETD is composed of two independent trip valves, each with two normally energized fail-safe solenoids. For each trip valve, each trip pilot valve solenoid is powered from a separate power source. The solenoids de-energize in response to detection of an overspeed condition by the turbine speed control logic. De-energization of both trip pilot valve solenoids is necessary to cause the spool in their respective trip valve to reposition, which depressurizes the emergency trip fluid system, rapidly closing all steam inlet valves and indirectly closing the steam extraction nonreturn valves. Accordingly, the repositioning of only one of the two trip valves is necessary to trip the main turbine. A single electrical component failure does not compromise trip protection, and does not result in a turbine trip. Each trip valve in the ETD is testable while the turbine is in operation.

The diverse primary overspeed trip function utilizes three passive speed sensors that are separate from the active speed sensors used for normal speed control and emergency trip function. Speed sensors are diverse (passive and active sensors) between primary overspeed and emergency overspeed trip. Speed sensing for primary

and emergency overspeed trip functions also use separate speed wheels (refer to Figure 10.2-5). Each speed signal for the primary trip function is compared to a speed setpoint of approximately 110% of rated speed, and produces trip signals arranged in two-out-of-three logics, to de-energize both trip pilot valve solenoids of one of the two trip valves of the ETD. Both trip pilot valve solenoids must be de-energized to trip the associated trip valve. The ETD has two redundant trip valves. Tripping of either redundant trip valve will drain the emergency trip fluid, resulting in a turbine trip.

The emergency overspeed trip function is the redundant backup electrical overspeed trip and uses three active magnetic pickups to sense turbine speed that are separate from those used by the primary overspeed trip function. The speed setpoint for the emergency overspeed trip function is approximately 111% of rated speed.

The control signals from the two turbine-generator overspeed trip functions are isolated from, and independent of, each other. The two overspeed trip functions use diverse electronic means (hardware and software/firmware) to eliminate common cause failures from rendering the trip functions inoperable. The two overspeed trip systems are installed in separate cabinets, each with redundant uninterruptable power sources.

The emergency electrical overspeed trip function uses the same turbine speed sensing techniques and the same speed sensors as the normal speed control system. The normal speed controllers and emergency overspeed protection trip controllers may be located in the same cabinet (refer to Figure 10.2-5). However, the control signals from the normal speed control system and the trip signals from the emergency overspeedprotection trip function are separate from each other. This means that the emergency overspeed protection trip function is implemented in three separate trip controllers, and that these trip controllers are separate from the normal speed controllers, so that the control signals from the two systems are isolated from, and independent of, each other. The trip output signals from the trip controllers are arranged in two-out-of-three logic to de-energize the trip pilot valve solenoids of one of the two trip valves in the ETD to cause a turbine trip. Redundant power sources are provided for the trip controllers and normal speed controllers. Loss of power to one trip controller will result in a single channel trip signal to the two-out-of-three trip logic with no turbine trip. Functional independence of the normal speed control system and the emergency overspeed trip system is assured in that failure of the normal speed controllers does not affect the ability of the emergency overspeed trip function.

The overspeed sensing devices are located in the turbine front bearing standard, and are therefore protected from the effects of missiles or pipe breakage. The hydraulic lines are fail-safe; if one were to be broken, loss of hydraulic pressure would result in a turbine trip. The ETD is also fail-safe. Each trip valve transfers to the trip state on a loss of power to both of its associated trip pilot valve solenoids, resulting in a turbine trip. These features provide inherent protection against failure of the overspeed protection system caused by low trajectory missiles or postulated piping failures.

Each turbine extraction line is reviewed for potential energy and contribution to overspeed. The number and type of extraction non-return valves required for each

extraction line are specified based on the enthalpy and mass of steam and water in the extraction line and feedwater heater. Higher energy lines are provided with power-assisted closed non-return valves, controlled by an air relay dump valve, which in turn, is activated by the emergency trip fluid system. The air relay dump valve, actuated on a turbine trip, dumps air from the extraction non-return valve actuators to provide rapid closing. The closing time of the extraction non-return valves is sufficient to minimize steam contribution to the turbine overspeed event.

The following component redundancies are employed to guard against excessive overspeed:

(1) Main stop valves/control valves

(2) Intermediate stop valves/intercept valves

(3) Normal speed control/primary overspeed control/emergency overspeed control

(4) Fast-acting solenoid valves/emergency trip fluid system (emergency trip device)

(5) Speed control signals/primary overspeed trip/emergency overspeed trip

(6) Spring assisted non-return check valves where needed/ air relay dump valve for spring assisted non-return valves

The main stop valves and control valves provide full redundancy in that these valves are in series and have independent control signals and operating mechanisms. Closure of all four stop valves or all four control valves effectively shuts off all main steam flow to the HP turbine. The intermediate stop and intercept valves are also fully redundant in that they are in series and have separate control signals and operating mechanisms. Closure of either valve or both valves in each of the six sets of intermediate stop and intercept valves effectively shuts off steam flow to the three LP turbines. This arrangement is such that failure of a single valve to close does not result in a maximum speed in excess of design limits. To ensure water flashing to steam from the feedwater heaters, moisture separators/reheaters, and the gland seal evaporator does not contribute to acceleration of the turbine after a trip, spring assisted non-return check valves are installed on lines that could contain high amounts of entrained energy.

The following is a summary of the shared hydraulic components and system interfaces.

- The fluid trip system supply (FTS) provides hydraulic fluid to the trip valves. Failure of this supply line will fail safe because loss of oil pressure will cause all valves to fast close.

- The hydraulic power unit (HPU) has one central reservoir, two redundant pumps, associated filters and control valves. These pumps supply high-pressure hydraulic

fluid for the fluid trip system, normal control of turbine valves and the main steam bypass valves.

- There is one hydraulic fluid drain header for the main stop valves (MSV) and one drain header for the control valves (CV). These two headers drain to the HPU reservoir through a common drain line.
- There is one hydraulic fluid drain header for three intermediate stop valves (ISV) and three intercept valves (IV), with one common drain line to the HPU reservoir. A similar arrangement exists for the other three ISVs and three IVs.
- The hydraulic fluid drain headers and drain lines are large diameter pipes, and are arranged with the appropriate slope to drain to the HPU reservoir.
- Each pair of ISVs and IVs share a common valve body, also referred to as a CIV, but each valve has its own separate valve disk, actuator, and instrumentation. The ISVs and IVs operate separately from each other as discussed in COLA Part 2, Tier 2, Subsection 10.2.2.2.
- The trip valves and lockout valves drain emergency trip system (ETS) fluid to a common drain header, where it is drained to the HPU reservoir through a common drain pipe. The header drain will be a one-inch nominal, or greater, pipe.
- The drain header has one vent line to the HPU reservoir.
- Periodic surveillance testing of valves and trip devices ensure that the drain lines are not plugged.
- There is one air relay dump valve that controls air to the steam extraction non-return valves. Venting of the air through the air relay dump valve will enable spring assisted closure of the non-return valves. The instrument air system supplies clean and filtered air to the non-return valves and the relay dump valve. See COLA Part 2, Tier 2, Subsection 9.3.6 for more details of the instrument air system. The extraction non-return valves are check valves and, should the air fail to vent, they would close on reverse flow without the spring assist.

10.2.2.5 Turbine Protection System

STP DEP 10.2-3

In addition to the overspeed trip signals discussed, the ETS closes the main stop valves *and control valves*,~~*and*~~ *the* ~~*CIVs*~~ intermediate stop valves and intercept valves, and the extraction non-return valves *to shut down the turbine on the following signals.*

(1) ~~*Emergency*~~Manual *trip* ~~*pushbutton*~~switch *in* the *control room*

(2) Moisture Separator high level

(3) High condenser pressure

(4) Low lube oil pressure

(5) LP turbine exhaust hood high temperature

(6) High reactor water level

(7) Thrust bearing wear

(8) ~~Overspeed (electrical and mechanical)~~ Not Used

(9) ~~Manual~~ Manual *trip ~~handle on~~* switch near the *front standard*

(10) Loss of stator coolant

(11) Low hydraulic fluid pressure

(12) ~~Any~~ Selected *generator trip*

(13) Loss of EHC electrical power

(14) Excessive turbine shaft vibration

(15) Loss of two of the three *speed signals* that are shared by the normal speed control and emergency overspeed trip functions

(16) Loss of two pressure control channels

All of the above trip signals except generator trips, loss of power, and *vibration and manual trips use ~~2/3 or 2/4~~* two-out-of-three *coincident trip logic.*

*When the ETS is activated, it overrides all operating signals and trips the main stop ~~and~~*valves, *control valves, ~~and combined~~ intermediate* stop valves, and intercept *~~by way of their disk/dump~~ valves.* The extraction non-return valves also close by venting air through the relay dump valve.

The manual trip switches in the control room and near the front standard are directly hardwired to interrupt power to the trip pilot valve solenoids, resulting in dumping of the ETS fluid and a turbine trip.

10.2.2.6 Turbine-Generator Supervisory Instruments

STP DEP 10.2-1

Although the turbine is not readily accessible during operation, the turbine supervisory instrumentation is sufficient to detect any potential malfunction. The turbine supervisory instrumentation includes monitoring of the following:

(13) ~~Exciter~~ Collector *air temperatures*

10.2.2.7 Testing

STP DEP 10.2-3

The ~~electrical and mechanical~~ Primary and Emergency *overspeed trip* circuits and *devices can be tested remotely at* shut down, *rated speed* and *under load, by means of controls ~~on the EHC test panel.~~*in the Main Control Room. *Operation of the overspeed protection devices under controlled, ~~overspeed~~* speed *conditions* is *checked at startup and after each refueling or major maintenance outage.* In some cases, operation of the overspeed protection devices can be tested just prior to shutdown, thus negating the need to test overspeed protection devices during subsequent startup, if no maintenance is performed affecting the overspeed trip circuits and devices.

During refueling, or maintenance shutdowns, coinciding with the in-service inspection schedule required by Section XI of the ASME Code for reactor components, at intervals defined in Subsection 10.2.3.6, at least one main steam stop valve, one turbine control valve, one intermediate stop valve, and one intercept valve are dismantled to conduct visual and surface examinations of valve seats, disks and stems. If unacceptable flaws or excessive corrosion is found in a valve, all other valves of that type are dismantled and inspected. Valve bushings are inspected and cleaned, and bore diameters checked for proper clearance.

Main stop valves and turbine control valves, intercept valves and intermediate stop valves are exercised quarterly (or as required by the missile probability analysis) by closing each valve and observing the remote valve position indicator for fully CLOSED position status. This test also verifies operation of the fast close function of each main steam stop, turbine control, intercept and intermediate stop valve during the last few percent of valve stem travel.

Access to required areas outside of the turbine shielding is provided on the turbine floor under operating conditions.

Provisions for testing each of the following devices while the unit is operating are included:

(1) Main stop valves and control valves

(2) Turbine bypass valves

(3) Low pressure turbine ~~combined~~ intermediate stop and intercept *valves ~~(CIVs)~~*

(4) ~~Overspeed governor~~ Emergency trip devices

(5) Turbine extraction nonreturn valves

(6) ~~Condenser vacuum trip system~~ Not Used

(7) ~~Thrust bearing wear detector~~ Not Used

(8) ~~*Remote trip solenoids*~~ Not Used

(9) Lubricating oil pumps

(10) Control fluid pumps

10.2.3.1 Materials Selection

STP DEP 10.2-2

~~*Since actual levels of FATT and Charpy V-notch energy vary depending upon the size of the part, and the location within the part, etc., these variations are taken into account in accepting specific forgings for use in turbines for nuclear application. The fracture appearance transition temperature (50% FATT), as obtained from Charpy tests performed in accordance with specification ASTM A-370, will be no higher than -17.8°C for low-pressure turbine disks. The Charpy V-notch energy at the minimum operating temperature of each low-pressure disk in the tangential direction should be at least 81.4 Nm.*~~

Low-pressure turbine wheel (disc) forgings are made from vacuum treated Ni-Cr-Mo-V alloy steel forgings. The fracture appearance transition temperature (50% FATT), as obtained from Charpy tests performed in accordance with ASTM A-370, will be no higher than 0ºF for low-pressure turbine wheel (disc) forgings. The Cv energy at the minimum operating temperature will be at least 60 ft-lbs for a low-pressure turbine wheel (disc) forging. A minimum of three Cv specimens will be tested in accordance with specification ASTM A-370 to determine this energy level. The determination of FATT is used in lieu of nil-ductility transition temperature methods.

Large integral rotors are also made from vacuum treated Ni-Cr-Mo-V alloy steel forgings. Their larger size limits the achievable properties. The fracture appearance transition temperature (50% FATT), as obtained from Charpy tests performed in accordance with ASTM A-370, will be no higher than +40ºF for large integral forgings. The Cv energy at the minimum operating temperature will be at least 45 ft-lbs for a large integral rotor forging. A minimum of three Cv specimens will be tested in accordance with specification ASTM A-370 to determine this energy level.

Current turbine designs utilize rotors produced from large integral forgings. Future turbine designs may include fabricated rotors produced from multiple wrought components. Acceptable material properties will be consistent with component size and fabrication method.

10.2.3.2 Fracture Toughness

STP DEP 10.2-2

Stress calculations include components due to centrifugal loads, interference fit, and thermal gradients where applicable. The ratio of material fracture toughness, KIC (as derived from material tests on each major part or rotor), to the maximum tangential stress intensity *at speeds from normal to* ~~*115% of rated speed*~~ design overspeed *is at least* ~~*10 mm*$^{1/2}$~~ 2 at minimum operating temperature. The fracture toughness (KIC)

value is determined using a value of deep-seated FATT based on the measured FATT values from trepan specimens, and a correlation factor obtained from historical integral rotor test data.

~~*Adequate material facture toughness needed to maintain this ratio is assured by destructive tests on material samples using correlation methods which are as conservative, or more so, than those presented in Reference 10.2-1. However, this method of obtaining fracture toughness, KIC, will be used only on materials which exhibit a well-defined Charpy energy and fracture appearance transition curve and strain-rate insensitive. The COL applicant will provide the test data and the calculated toughness curve to the NRC staff for review. (See Subsection 10.2.5.1 for COL license information.)*~~

~~*Turbine operating procedures are employed to preclude brittle fracture at startup by ensuring that metal temperatures are (a) adequately above the FATT, and (b) as defined above, sufficient to maintain the fracture toughness to tangential stress ratio at or above 10 mm$^{1/2}$.*~~ *Sufficient warmup time is specified in the turbine operating instruction to assure that toughness will be adequate to prevent brittle fracture during startup.* Sufficient warm-up time is specified in the turbine operating instructions to ensure that the above ratio of fracture toughness to stress intensity is maintained during all phases of anticipated turbine operation.

10.2.3.3 High Temperature Properties

STP DEP 10.2-2

The operating temperatures of both *the high-pressure* and the low pressure *rotors are below the stress rupture range. Therefore, creep-rupture is not a* ~~*significant*~~ *failure mechanism.*

10.2.3.4 Turbine Design

STP DEP 10.2-2

The turbine assembly is designed to withstand normal conditions and anticipated transients, including those resulting in turbine trip, without loss of structural integrity. The design of the turbine assembly meets the following criteria:

(1) Turbine shaft bearings are designed to retain their structural integrity under normal operating loads and anticipated transients, including those leading to turbine trips.

(2) The multitude of natural critical frequencies of the turbine shaft assemblies existing between zero speed and 20% overspeed are controlled in the design and operation so as to cause no distress to the unit during operation.

(3) ~~*The maximum tangential stress resulting from centrifugal forces, interference fit, and thermal gradients does not exceed 0.75 of the yield strength of the materials at 115% of rated speed.*~~ The turbine rotor average tangential stress

(excluding stresses in the blade/wheel region) at design overspeed resulting from centrifugal forces, interference fit (as applicable), and thermal gradients does not exceed 0.75 of the minimum specified yield strength of the material.

(4) The design overspeed of the turbine is at least *5% above the highest anticipated speed resulting from a loss of load. The basis for the assumed design overspeed will be submitted to the NRC staff for review. (See Subsection 10.2.5.2 for COL license information.)*

~~*(5) The turbine disk design will facilitate inservice inspection of all high stress regions. The turbine rotor design is based on using solid forged monoblock rotors rather than shrunk-on disks.*~~

10.2.3.5 Preservice Inspection

STP DEP 10.2-1

The pre-service inspection procedures and acceptance criteria are as follows.

(1) Forgings are rough-machined with minimum stock allowance prior to heat treatment.

(2) Each finished machined rotor is subjected to ~~100% volumetric (ultrasonic), and~~ surface visual examinations, using established acceptance criteria. These criteria are more restrictive than those specified for Class 1 components in the ASME Boiler and Pressure Vessel Code, Sections III and V, and include the requirement that subsurface sonic indications are either removed or evaluated to ensure that they will not grow to a size which will compromise the integrity of the unit during its service life. Forgings undergo 100% volumetric (ultrasonic) examination subject to established inspection methods and acceptance criteria that are equivalent or more restrictive than those specified for Class I components in ASME Code Sections III and V. Subsurface sonic indications are not accepted if found to compromise the integrity of the unit during its service life. Rotor forgings may be bored to remove defects, obtain material for testing and to conduct bore sonic inspection.

(3) ~~All finished~~ Finished *machined ~~surfaces~~* rotors *are* also *subjected to ~~a~~* surface and visual examination. Specific portions, including any bores, keyways, or drilled holes, are subject to *magnetic particle test~~. with no flaw indications permissible~~* Surface indications are evaluated and removed if found to compromise the integrity of the unit during its service life. All flaw indications in keyways and drilled holes are removed.

(4) Each fully ~~bucketed~~ bladed *turbine rotor assembly is* factory *spin- tested at ~~the highest ainticipated speed resulting from a loss of load~~* 20% overspeed*.*

Additional preservice inspections include air leakage tests performed to determine that the hydrogen cooling system is tight before hydrogen is introduced into the generator

casing. The hydrogen purity is tested in the generator after hydrogen has been introduced. The generator windings and all motors are megger tested. Vibration tests are performed on all motor-driven equipment. Hydrostatic tests are performed on all coolers. ~~All piping is pressure tested for leaks. Motor-operated valves are factory leak-tested and inplace tested once installed~~ Required piping is pressure-tested for leaks.

10.2.3.6 Inservice Inspection

STP DEP 10.2-1

The inservice inspection program for the turbine assembly includes ~~the disassembly of the turbine and~~ complete inspection of all normally inaccessible parts, such as couplings, coupling bolts, turbine shafts, ~~low-pressure turbine buckets, low-pressure and high-pressure~~ turbine blades and turbine *rotors. During plant shutdown (coinciding with the inservice inspection schedule for ASME Section III components, as required by the ASME Boiler and Pressure Vessel Code, Section XI), turbine inspection is performed in sections during the refueling outages so that ~~in 10 years~~* a *total inspection has been completed at least once* within the time period recommended by the manufacturer*.*

The recommended maintenance and inspection program plan for the turbine assembly, valves and controls ensures that the annual turbine generator missile probabilities are maintained at or below the acceptable level (see Subsection 10.2.1).

This inspection consists of visual, ~~and~~ surface and volumetric *examinations as indicated below:*

(1) Visual, magnetic particle, and ultrasonic *examination of all accessible surfaces of rotors.*

(2) Visual, ~~and surface~~ magnetic particle, or liquid penetrant *examination of ~~all low-pressure buckets~~* turbine blades*.*

(3) ~~100% visual~~ Visual and magnetic particle *examination of couplings and coupling bolts.*

The inservice inspection of valves important to overspeed protection includes the following:

(1) All main stop valves, control valves, extraction nonreturn valves, intermediate stop valves and intercept valves *~~and CIVs will be~~* are *tested under load. Test controls installed ~~on~~* in *the main control room ~~turbine panel~~ permit full stroking of the stop valves, control valves, and ~~CIVs~~* intermediate stop valves and intercept valves*. Valve position indication is provided ~~on the panel~~* in the main control room*. Some load reduction ~~is~~* may be *necessary before testing main stop ~~and~~*valves, *control valves,* intermediate stop valves *and* intercept valves*~~-CIVs~~. Extraction nonreturn valves are tested by equalizing air pressure*

across the air cylinder. Movement of the valve arm is observed ~~upon action of the spring closure mechanism~~ by the main control room valve position indication*.*

(2) Main stop valves, control valves, extraction nonreturn valves, ~~and CIVs~~ intermediate stop valves and intercept valves *~~will be~~* are *tested by the COL applicant ~~in accordance with the BWROG turbine surveillance test program,~~* as required by the turbine missile probability analysis *by closing each valve and observing by the* main control room *valve position ~~indicator~~* indication *that ~~it~~* the valves *move~~s~~ smoothly to a fully closed position. Closure of each main stop valve, control valve*, *~~and CIV~~* intermediate stop valve and intercept valve *during test ~~will be~~* is *verified by ~~direct~~ observation of the* main control room *valve ~~motion~~* position indication*.* This test also verifies the fast closure function during the last portion of the valve travel.

Tightness tests of the main stop and control valves are performed at least once per maintenance cycle by checking the coastdown characteristics of the turbine from no load with each set of four valves closed alternately, or using warm-up steam as an indicator with the valves closed*.*

Extraction nonreturn valves are tested at power, using the air supply test solenoid valves, to verify operability.

During each refueling outage, the main stop valves, control valves, intermediate stop valves, intercept valves, and nonreturn valves are tested to verify their closure times are less than the times provided in FSAR Section 10.2.2.2.

The turbine overspeed protection trip devices are tested quarterly, to verify operability of these devices. The time out of service for either the primary or emergency overspeed protection system for maintenance will be specified in the appropriate maintenance procedure.

(3) All main stop valves, ~~main~~ control valves, ~~and CIVs~~, intermediate stop valves, intercept valves, and extraction nonreturn valves are disassembled and visually *~~will be~~ inspected once during the first three refueling or extended maintenance shutdowns. Subsequent inspections ~~will be~~* are *scheduled ~~by the COL applicant in accordance with the BWROG turbine surveillance test program~~* as required by the turbine missile probability analysis*. The inspections will be conducted for:*

(a) Wear of linkages and stem packings.

(b) Erosion of valve seats and stems.

(c) Deposits on stems and other valve parts which could interfere with valve operation.

(d) Distortions, misalignment or cracks*.*

Inspection of all valves of one functional *type* (i.e., stop, control, intercept, nonreturn) are ~~*will be*~~ *conducted* ~~*if any unusual condition is discovered*~~ for any detrimental, unusual condition (as defined by the turbine valve in-service inspection program) if one is discovered during the inspection of any single valve*.*

10.2.4 Evaluation

STD DEP T1 2.4-2

STP DEP 3.5-1

The probability of a turbine missile adversely impacting SSCs important to safety will be maintained less than $1x10^{-7}$ per year as discussed in Subsection 3.5.1.1.1.3, which meets the guidelines of Regulatory Guide 1.115 for not considering turbine missile damage to specific components. Refer to Subsection 3.5.1.1.1.3 for a discussion of compliance with Standard Review Plan 3.5.1.3 and the guidelines of Regulatory Guide 1.115. Thus failure of a turbine generator should not preclude the safe shutdown of the reactor.

Since there ~~*is*~~are *no* ~~*nuclear safety related mechanical equipment in the turbine*~~essential systems or components located in the condenser expansion joint *area and since the condenser is at subatmospheric pressure during all modes of turbine operation, failure of the joint will have no adverse effects on nuclear safety related equipment.*

10.2.5 COL License Information

10.2.5.1 Low Pressure Turbine Disk Fracture Toughness

The following site-specific supplement addresses COL License Information Item 10.1.

In accordance with 10 CFR 50.71(e), STPNOC will update the FSAR to identify the as-built turbine material property data that supports the material properties used in the turbine rotor design specified in Subsection 10.2.3.2, after procurement and prior to initial fuel load (COM 10.2-1). Operating procedures to assure sufficient turbine warm-up time as required by Subsection 10.2.3.2, are prepared in accordance with the guidelines in FSAR Section 13.5.

10.2.5.2 Turbine Design Overspeed

The following site-specific supplement addresses COL License Information Item 10.2.

The highest anticipated speed resulting from loss of load is normally in the range of 105-108% of rated speed. Turbine components are designed such that calculated stresses do not exceed the minimum material strength at 120% of rated speed. Turbine rotors are spun to a speed of 120% rated as part of factory balance verification. This is approximately 12% above the highest anticipated speed resulting from loss of load, which meets the design criteria stated in Section 10.2.3.4 Item (4). The valve closure times used in the overspeed calculation are provided in Subsection 10.2.2.2. The turbine steam admission valves are assumed to be initially at valve-wide-open

positions, which are conservative. The primary overspeed trip and the emergency overspeed trip setpoints are 110% and 111%, respectively.

10.2.5.3 Turbine Inservice Test and Inspection

The following site-specific supplement addresses COL License Information Item 10.3.

Turbine inservice test and inspection requirements are discussed in Subsection 10.2.3.6.

10.2.6 References

The following supplement adds the following references.

10.2-3 Electric Power Research Institute, “Guidelines for Permanent BWR Hydrogen Water Chemistry Installations – 1987,” EPRI NP-5283-SR-A, September 1987.

10.2-4 J. Tominaga, “Analysis of the Probability of the Generation of Missiles from Fully Integral Nuclear Low Pressure Turbines,” Toshiba Technical Report UTLR-0008-P, Revision 1, September 2010.

10.2-5 K. Jibiki, “Probabilistic Evaluation of Turbine Valve Test Frequency,” Toshiba Technical Report UTLR-0009-P, Revision 1, September 2010.

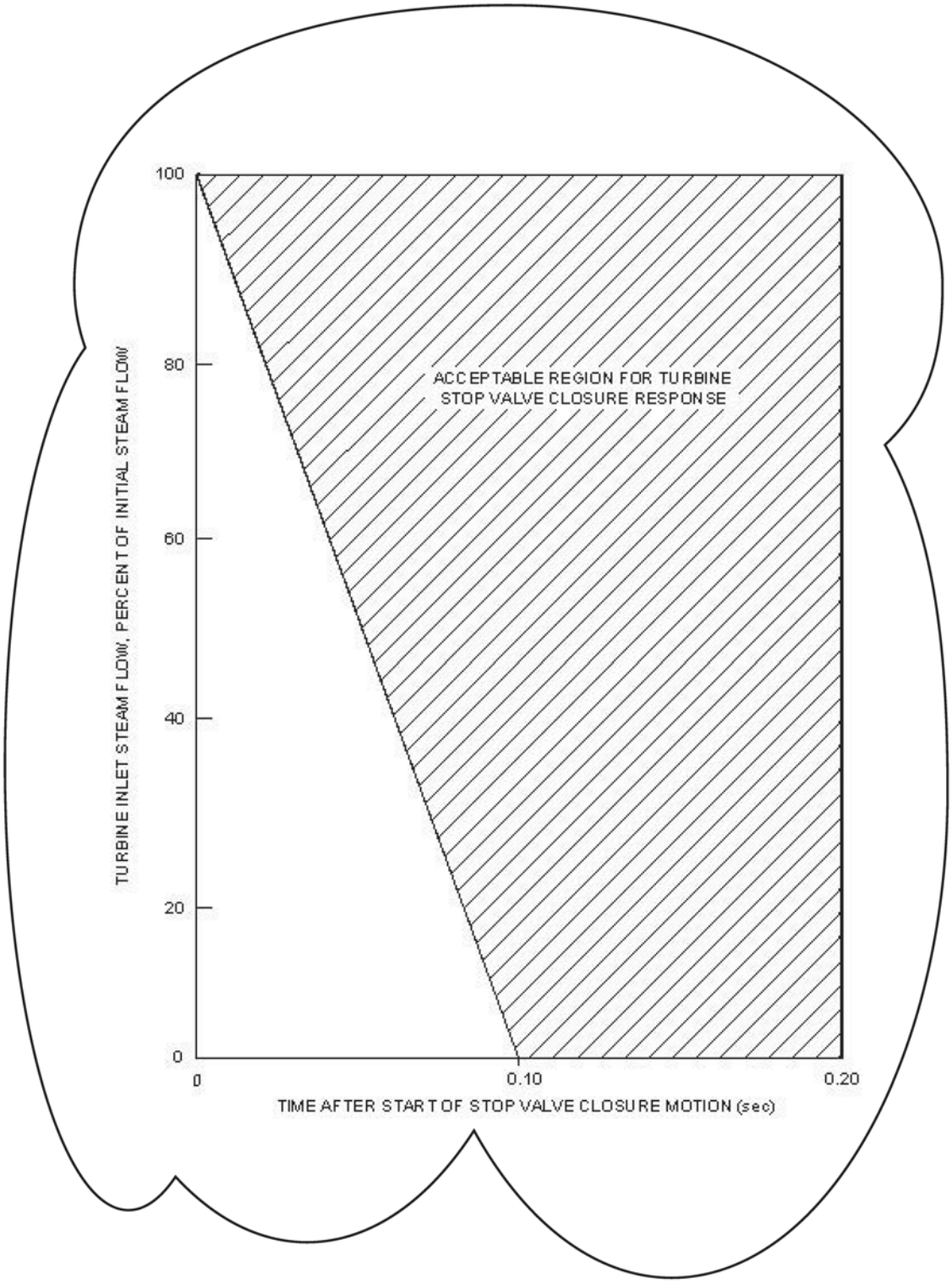

Figure 10.2-1 Turbine Stop Valve Closure Characteristic

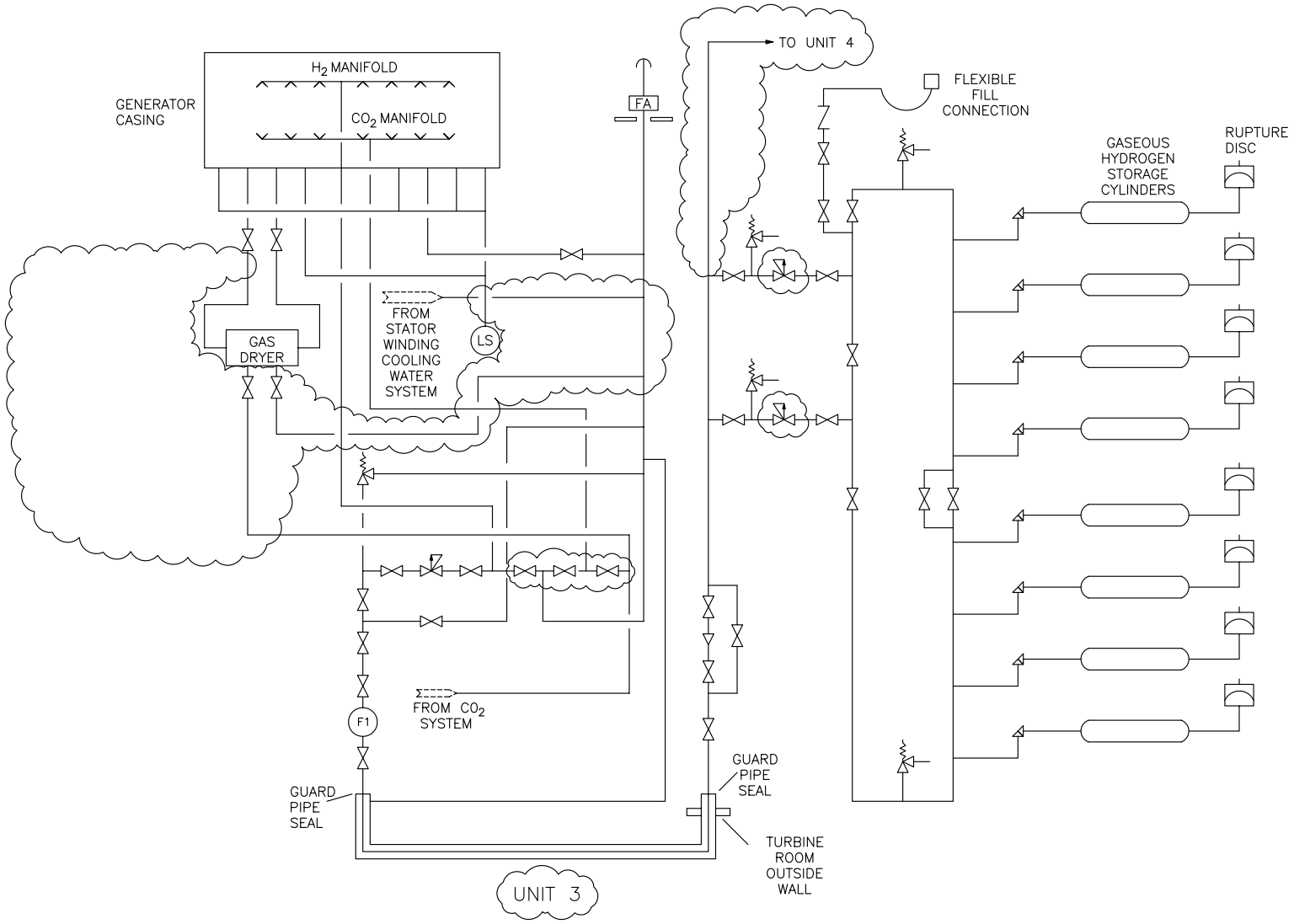

Figure 10.2-4 Generator Hydrogen and CO_2 System

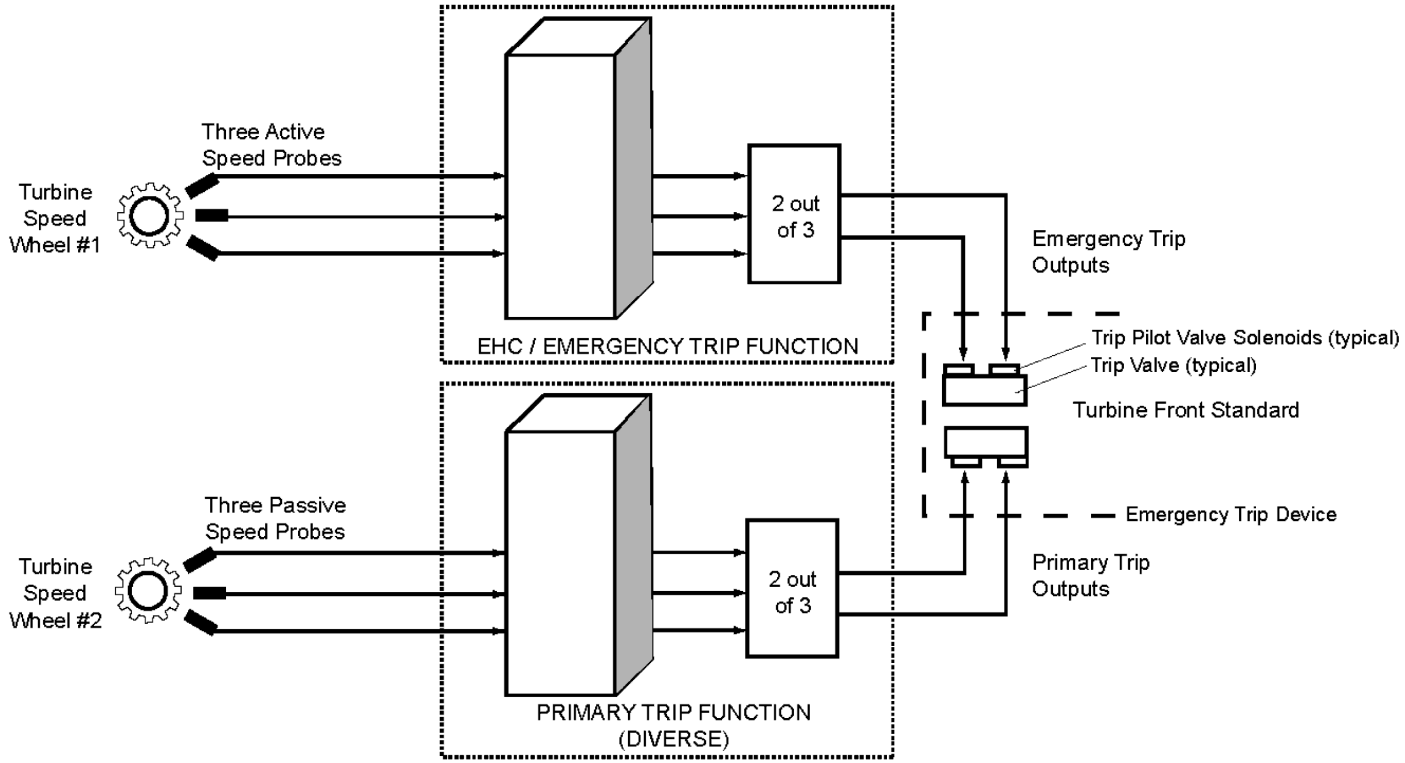

Figure 10.2-5 Turbine Overspeed Trip System Functional Diagram

10.3 Main Steam Supply System

The information in this subsection of the reference ABWR DCD, including all subsections, tables, and figures, is incorporated by reference with the following departures and supplements.

STP DEP 10.2-1 (Table 10.3-1, Figures 10.3-1 and 10.3-2)

STD DEP 10.3-1

STD DEP 10.4-1

STP DEP 10.4-3 (Figure 10.3-2)

STD DEP Admin

10.3.2.1 General Description

STD DEP Admin

The Main Steam Supply System is illustrated in Figure 10.3-1. The system design data is provided in Table 10.3-1. The main steam piping consists of four 700A pipe size diameter lines from the outboard MSIVs to the main turbine stop valves. The four main steamlines are connected to a header upstream of the turbine stop valves to permit testing of these valves *~~the MSIVs~~ during plant operation with a minimum load reduction. This header arrangement is also provided to ensure that the turbine bypass and other main steam supplies are connected to operating steamlines and not to idle lines. The main steam process downstream of the turbine stop valves is illustrated in Figure 10.3-2.*

The following standard supplement addresses continued operation with an isolated main steamline.

Continued operation with an isolated MSL is only permitted if an analysis of the effects of flow-induced vibration on the remaining open MSIVs and other critical components in the reactor and steam systems has been performed. Continued plant operation must remain within the bounds of this analysis.

STD DEP 10.3-1

~~A drain line is~~ Drain lines are *connected to the low points of each main steamline, both inside and outside the containment. Both sets of drains are headered and connected with isolation valves to allow drainage to the main condenser. To permit intermittent draining of the steamline low points at low loads, orificed lines are provided around the final valve to the main condenser. The steamline drains, ~~except~~* including the drains *through the Control Building, maintain a continuous downward slope ~~from the steam system low points to the orifice located near the condenser. The drain line from the orifice to the condenser also slopes downward~~* in the direction of flow to the steam system line drain low points in the Reactor Building steam tunnel and then slope upward to reach the high point in the steam tunnel above the Control Building. From

this high point in the Control Building, the lines slope downward in the direction of flow to the Nuclear Island-Balance of Plant piping interface one meter outside of the Control Building. Although the drain lines flow upward for a portion of their travel, the differential pressure between the condenser and main steam lines, combined with the bypass and orifice isolation valves in the drain lines, which are controlled by reactor pressure and power, respectively, ensure complete drainage while preventing water hammer. *To permit emptying the drain lines for maintenance, drains are provided from the line low points going to the radwaste system.*

The drains from the steamlines inside containment are connected to the steamlines outside the containment to permit equalizing pressure across the MSIVs during startup and following a steamline isolation.

The Main Steam System contains the radioactive steam which passes the main steam isolation valves before they close to isolate the reactor under emergency conditions. This function of containing steam is done by the main steam piping, turbine bypass piping and steam drain piping discharging to the condenser.

The main steam piping and branch lines, 2-1/2 inches in diameter and larger, from (but not including) the outboard MSIVs to the turbine stop valves and to the turbine bypass valves are Quality Group B in accordance with the construction and quality requirements, ASME B&PV, Section III, Division 1, Subsection NC-Class 2, Nuclear Plant Components. The main steam lines from the seismic restraint on the outboard side of the outermost MSIVs, and all branch lines 2-l/2 inches in diameter and larger (including lines and valve supports), are designed by the use of an appropriate dynamic seismic system analysis, to withstand the safe shutdown earthquake (SSE) design loads for the ABWR standard plant in combination with other appropriate loads, within the limits specified for Class 2 pipe in Section III of the ASME B&PV Code. Lines smaller than 2-l/2 inches in diameter, the rupture of which could result in bypass of the main condenser, are designed to withstand the SSE design loads for the ABWR standard plant in combination with other appropriate loads. The mathematical model for the dynamic and seismic analyses of the main steam lines and branch line piping includes the turbine stop valves and piping to the turbine casing.

10.3.2.3 System Operation

STD DEP 10.4-1

Normal Operation — ~~*At low plant power levels, the Main Steam System may be used to supply steam to the turbine gland steam seal system. At high plant power levels, turbine gland sealing steam is normally supplied from the high pressure heater drain tank or related turbine extraction.*~~ During startup, the turbine gland seal steam system is supplied from the auxiliary boiler. At a sufficient pressure during reactor startup and up to rated power operation, seal steam is supplied by the gland steam evaporator. The source of heating steam for the evaporator is main steam or turbine extraction steam.

10.3.7 COL License Information

10.3.7.1 Procedures to Avoid Steam Hammer and Discharge Loads

The following site-specific supplement addresses COL License Information Item 10.4.

Operating and maintenance procedures that include precautions to avoid steam hammer and relief valve discharge loads are prepared in accordance with the Plant Operating Procedure Development Plan described in Subsection 13.5.3.1.These precautions include a sufficiently long main steamline warm-up period, including a turbine soaking period, during which the low point drain valves are opened to ensure that no condensed steam remains in the main steamlines when the drain valves are closed. Additionally, maintenance procedures provide for the routine inspection of the low point drain collection pots to ensure that they are operating properly.

10.3.7.2 MSIV Leakage

The following standard supplement addresses COL License Information Item 10.5.

The MSIVs are designed to limit the leakage to less than 66.1 liters/min for all four lines, at a pressure corresponding to the calculated peak containment pressure for design basis accidents given in Table 6.2-1.

Table 10.3-1 Main Steam Supply System Design Data

Main Steam Piping	
Design flow rate at 6.79 MPaA and 0.4~~0~~% moisture, kg/h	~ ~~*7.71E+06*~~ **7.65E+06**

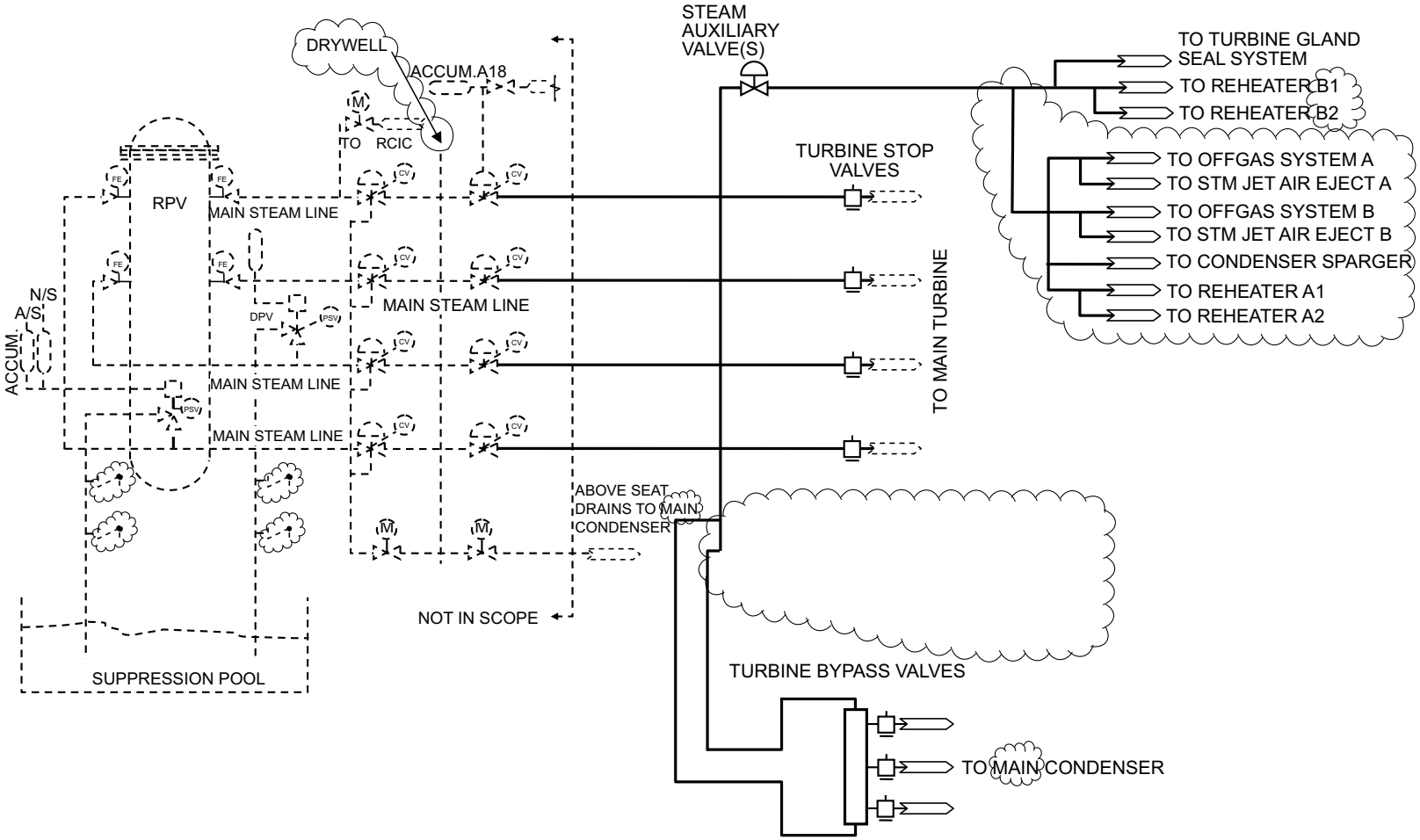

Figure 10.3-1 Main Steam Supply System

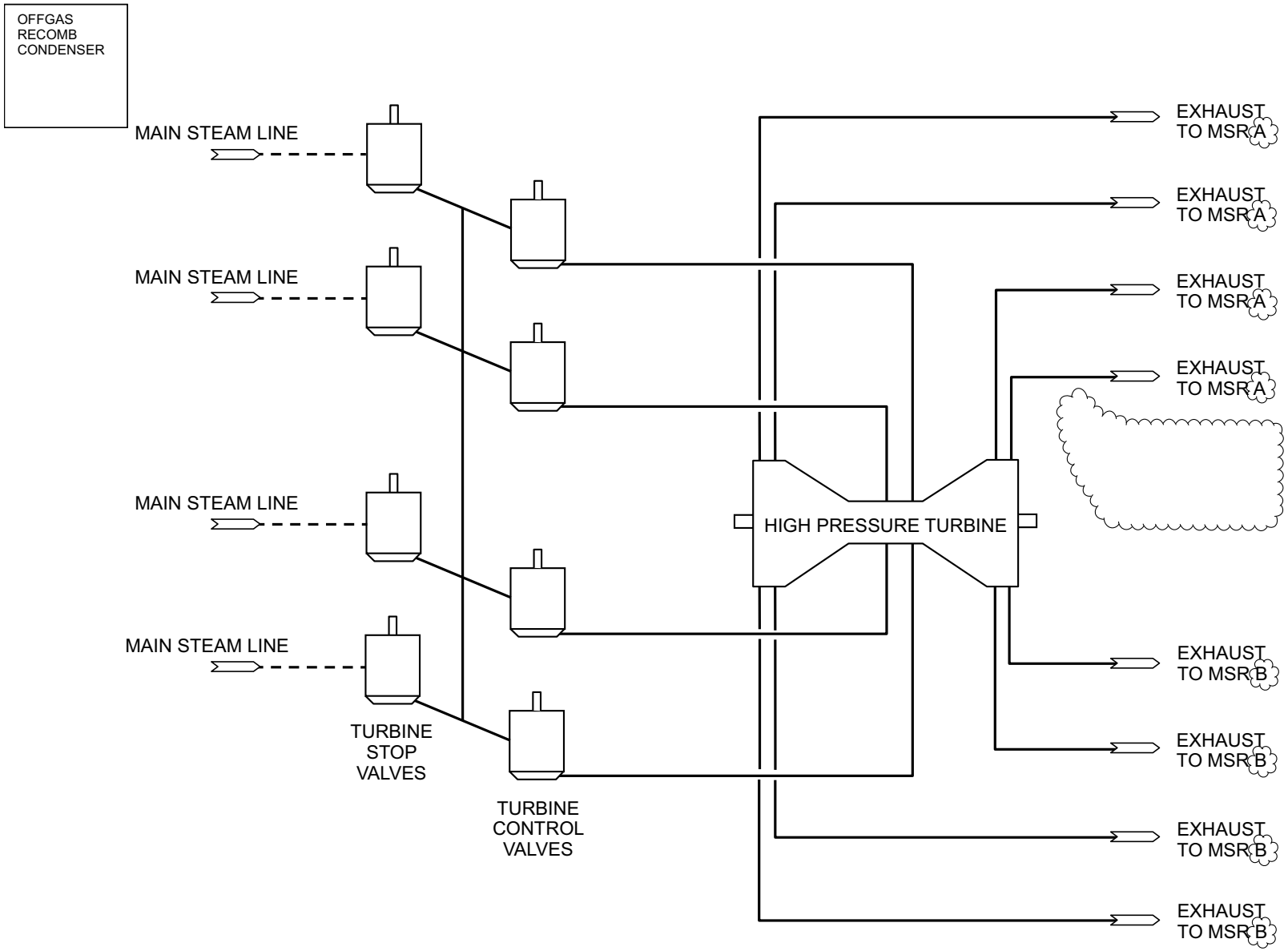

Figure 10.3-2 Main Steam Turbine System

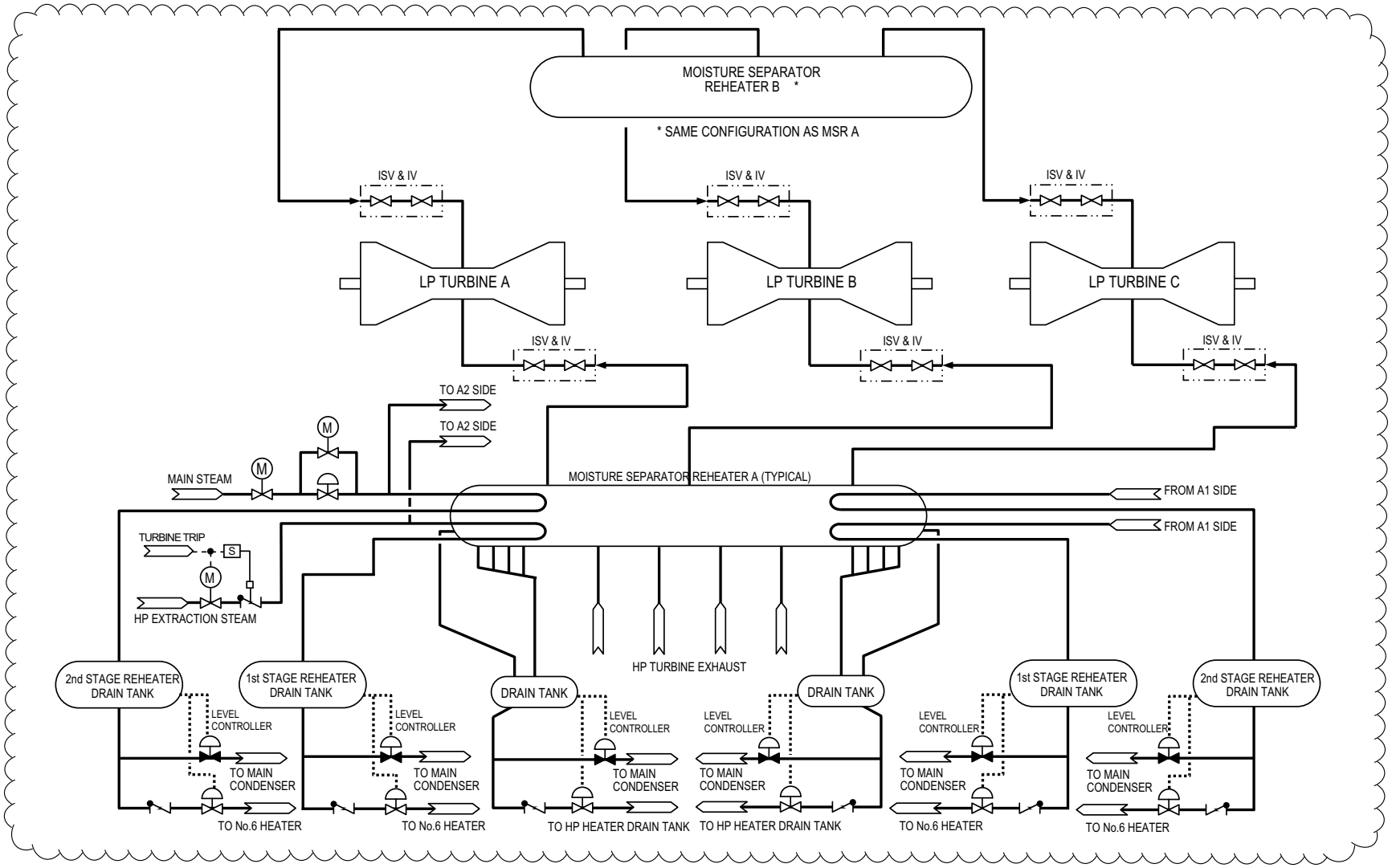

Figure 10.3-2 Main Steam Turbine System (Continued)

10.4 Other Features of Steam and Power Conversion

The information in this section of the reference ABWR DCD, including all subsections, tables, and figures is incorporated by reference with the following departures and supplements.

STD DEP T1 3.4-1

STP DEP 1.2-2

STD DEP 7.7-3

STD DEP 9.2-3 (Figure 10.4-5)

STD DEP 10.4-1 (Figure 10.4-2)

STP DEP 10.4-2 (Table 10.4-1, Table 10.4-3, Figure 10.4-3)

STP DEP 10.4-3 (Table 10.4-2, Figure 10.4-1)

STD DEP 10.4-5 (Tables 10.4-4, 10.4-5 and 10.4-6, Figures 10.4-5, 10.4-6, 10.4-7, and 10.4-8)

STD DEP 10.4-6

STD DEP 10.4-7 (Figure 10.4-9)

STD DEP Admin

10.4.1.2.1 General Description

STP DEP 10.4-2

The main condenser is a single pass, single pressure ~~*multipressure*~~*, three-shell,* ~~*reheating*~~*/deaerating unit. Each shell is located beneath its respective low-pressure turbine.*

~~*The three condenser shells are designated as the low-pressure shell, the intermediate-pressure shell, and the high-pressure shell.*~~ The three condenser shells are cross-connected to equalize pressure. *Each shell has at least two tube bundles. Circulating water flows in* ~~*series*~~ parallel *through the three single-pass shells (Figure 10.4-3).*

10.4.1.2.2 Component Description

Table 10.4-1 provides general condenser design data. ~~*and reference data that is typical of condensers operating with closed loop circulating water systems. Nothing in this section precludes the use of a single pressure condenser and parallel (instead of series) circulating water system since these will have no effect on the Nuclear Island.*~~

10.4.1.5.2 Pressure

STP DEP 10.4-2

Condenser pressure is measured by gauges, pressure switches, and electronic pressure transducers. These instruments provide signals to annunciators, trip units, the Turbine Control System~~, Recirculation Flow Control System~~ and the Steam Bypass and Pressure Control System. In addition, four independent and redundant safetyrelated pressure transmitters provide input signals to the Nuclear Steam Supply System.

~~Condenser pressure is an input to the Reactor Recirculation System. Recirculation pump runback is initiated upon the trip of a circulating water pump when condenser pressure is higher than some site specific preset value. Runback is automatically initiated~~ In case of main condenser vacuum decreasing, the control room operator will reduce reactor power when required to avoid a turbine trip on high condenser pressure.

10.4.2.2 Description

STP DEP 10.4-3

The MCES (figure 10.4-1) consists of two 100%-capacity, double stage, steam jet air ejector (SJAE) units (complete with ~~intercondenser~~ intercondensers*) for power plant operation, and ~~a~~* two, 100% *mechanical vacuum ~~pump~~* pumps *for use during startup. The last stage of the SJAE is a noncondensing stage. One SJAE unit is normally in operation and the other is on standby.*

During the initial phase of startup, when the desired rate of air and gas removal exceeds the capacity of the steam jet air ejectors, and nuclear steam pressure is not adequate to operate the SJAE units, the mechanical vacuum ~~pump~~ pumps *~~establishes~~* establish *a vacuum in the main condenser and other parts of the power cycle. The discharge from the vacuum ~~pump~~* pumps *is then routed to the ~~Turbine Building compartment exhaust system~~* plant vent stack*, since there is then little or no effluent radioactivity present. Radiation detectors in the ~~Turbine Building compartment exhaust system~~* Offgas collecting duct *and plant vent alarm in the main control room if abnormal radioactivity is detected (Section 7.6). Radiation monitors are provided on the main steamlines which trip the vacuum ~~pump~~* pumps *if abnormal radioactivity is detected in the steam being supplied to the condenser.*

The SJAEs are placed in service to remove the gases from the main condenser after a pressure of about ~~0.034 to 0.051 MPa~~ 7kPa *absolute* or less *is established in the main condenser by the mechanical vacuum pump*s *and when sufficient nuclear steam pressure is available.*

During normal power operations, the SJAEs are ~~normally~~ driven by ~~crossaround steam, with~~ the main steam ~~supply on automatic standby~~. ~~The main steam supply, however, is normally used during startup and low load operation, and auxiliary steam is available for normal use of the SJAEs during early startup, should the mechanical vacuum pump prove to be unavailable.~~

10.4.2.5.2 Mechanical Vacuum Pumps

Pressure is measured on the suction line of the mechanical vacuum ~~pump~~ pumps *~~by a pressure transmitter or switch. Upon reaching a preset vacuum, the pressure switch energizes a solenoid valve, which allows additional seal water to be pumped to the vacuum pump.~~* The pumps start with the seal water flow signal within the preset range. *Seal pump discharge pressure is locally monitored. Seal water cooler discharge temperature is measured by a temperature indicating transmitter or switch. On high temperature, the switch activates an annuciator in the main control room. The vacuum ~~pump~~* pumps *exhaust stream is discharged to the ~~Turbine Building compartment exhaust system~~* Offgas collecting duct, *which provides for radiation monitoring of the system effluents prior to their release to the monitored vent stack and the atmosphere.*

The vacuum ~~pump~~ pumps *~~is~~* are *tripped and ~~its~~* their *discharge ~~valve~~* valves *~~is~~ are closed upon receiving a main steam high-high radiation signal.*

10.4.3.2.1 General Description

STD DEP 10.4-1

The turbine gland seal system is illustrated in Figure 10.4-2. The turbine gland seal system consists of a gland steam evaporator, *sealing steam pressure regulator, sealing steam header, a gland steam condenser with two full-capacity exhauster blowers, and the associated piping, valves and instrumentation.*

10.4.3.2.2 System Operation

The turbine is equipped with seals for a separate steam seal system. Both high and low pressure packings are fed with steam from a non-radioactive source, separate from the turbine at all loads. Non-radioactive steam is produced by the steam seal evaporator and fed to the sealing steam header through the sealing steam pressure regulator.

The steam seal evaporator is a shell-and-tube-type heat exchanger. The source of heating steam for the evaporator is the turbine auxiliary steam header (main steam) during low load operation and turbine extraction during normal operation. Heating steam is passed through the tube bundle, which is immersed in condensate to be evaporated. During startup and low load operation, heating steam is supplied from the main steam lines ahead of the turbine main stop valves. Shellside pressure is controlled by modulating position of control valves in the main steam source. As turbine load is increased, the heating steam source is switched to a turbine extraction when the extraction pressure becomes sufficiently high. Relief valves protect the tubeside and shellside from overpressure. Steam that is condensed in the tube bundle flows into a drain tank. It is then routed to a feedwater heater or to the main condenser by the drain tank level control system.

Condensate in the steam seal evaporator is controlled by the shellside level control system. Level controls on the evaporator maintain a set level by controlling the position of the evaporator water feed valve and hence the rate of condensate flow into the evaporator, according to the demand for sealing steam.

*The seal steam header pressure is regulated automatically by ~~a pressure controller~~*the sealing steam pressure regulator*.* Pressure is controlled at approximately 27.6 kPaG. Relief valves protect the sealing steam header from overpressure. *During startup ~~and low load operation~~, the seal steam is supplied from ~~the main steam line or auxiliary steam header~~* the auxiliary boiler*. ~~Above approximately 50% load, however, sealing steam is normally provided from the heater drain tank vent header.~~* When reactor pressure exceeds a prescribed value during plant startup and up to rated power operation, sealing steam is normally provided by the gland steam evaporator. *At all loads, gland sealing can be achieved using auxiliary steam so that plant power operation can be maintained without appreciable radioactivity releases even if highly abnormal levels of radioactive contaminants are present in the process steam, due to unanticipated fuel failure in the reactor.*

10.4.3.3 Evaluation

The TGSS is designed to prevent leakage of radioactive steam from the main turbine shaft glands and the valve stems. The high-pressure turbine shaft seals must accommodate a range of turbine shell pressure from full vacuum to approximately ~~1.52~~ 1.77 *MPaA. The low-pressure turbine shaft seals operate against a vacuum at all times. The gland seal outer portion steam/air mixture is exhausted to the gland steam condenser via the seal vent annulus (i.e., end glands), which is maintained at a slight vacuum. The radioactive content of the sealing steam,* if any*, which eventually exhausts to the plant vent and the atmosphere (Section 11.3), makes a negligible contribution to overall plant radiation release.* During normal power operation, clean steam from the gland seal evaporator is used. *In addition, the auxiliary steam system is designed to provide a 100% backup to the normal gland seal process steam supply. A full capacity gland steam condenser is provided and equipped with two 100% capacity blowers.*

10.4.3.5 Instrumentation Application

STD DEP T1 3.4-1

STD DEP 10.4-1

10.4.3.5.3 Steam Seal Evaporator

10.4.3.5.3.1 Pressure

The Plant Information and Control System continuously monitors steam seal evaporator tubeside and shellside pressures. Heating steam pressure is monitored to determine when it is high enough to switch over to the extraction source from the main steam source.

10.4.3.5.3.2 Level

Condensate level in the steam seal evaporator shell is continuously monitored as part of the function of controlling the rate of condensate flow for evaporation. High and low level alarms are provided in the main control room.

Condensate level in the tubeside drain tank is continuously monitored as part of the function of controlling the flow of condensed heating steam from the tubes. High and low level alarms are provided in the main control room.

10.4.4.1.2 Power Generation Design Bases

STD DEP 10.4-6

Power Generation Design Basis Three—The TBS is designed, in conjunction with the reactor systems, to provide for a ~~40~~ 33% electrical step-load reduction without reactor trip. The systems will also allow a turbine trip ~~but~~ below 33% power without lifting the main steam safety valves.

10.4.4.2.1 General Description

The TBS, in combination with the reactor systems, provides the capability to shed ~~40%~~ 33% of the T-G rated load without reactor trip and without the operation of safety/relief valves. A load rejection in excess of ~~40%~~ 33% is expected to result in reactor trip ~~but without~~ with operation of ~~any~~ steam safety ~~valves~~ valves at high power levels.

10.4.4.2.2 Component Description

STD DEP Admin

One valve chest is provided and houses three individual bypass valves. Each bypass valve is an angle body type valve operated by hydraulic fluid pressure with spring action to close. The valve chest assembly includes hydraulic supply and drain piping, three hydraulic accumulators (one for each bypass valve), servo valves, fast acting ~~servo~~ solenoid valves, and valve position transmitters.

10.4.4.2.3 System Operation

STD DEP 10.4-6

When the reactor is operating in the ~~automatic load following~~ plant automation mode, ~~a 10% load reduction can be accommodated without opening the bypass valves, and a 25% load reduction can be accommodated with momentary opening of the bypass valves.~~ load changes are coordinated by the Automatic Power Regulator (Subsection 7.7.1.7). These load changes are accomplished by change in reactor ~~recirculating~~ recirculation flow ~~without any control~~ and/or rod control motion, without opening of the turbine bypass valves.

10.4.4.5 Instrumentation Applications

Input to the system also includes ~~load~~ turbine steam flow demand and load reference signals from the turbine speed load control system. The SB&PC System uses these ~~three~~ signals to position the turbine control valves and~~,~~ the bypass valves~~, and, indirectly the reactor internal recirculation pump speed~~. A complete description of the control system is included in Chapter 7.

10.4.5 Circulating Water System

STP DEP 10.4-2

The Circulating Water System (CWS) provides cooling water for removal of the power cycle waste heat from the main condensers and transfers this heat to the power cycle heat sink. For STP 3 & 4, the power cycle heat sink utilizes a Main Cooling Reservoir (MCR) to reject power cycle waste heat.

10.4.5.2.1 General Description

STP DEP 10.4-2

The Circulating Water System (Figure 10.4-3) consists of the following components: (1) ~~*screen house*~~ intake structure *and intake screens, pumps,(2) condenser water boxes and piping and valves, (3) tube side of the main condenser, (4) water box fill and drain subsystem, and (5) related support facilities such as for system water treatment, inventory blowdown and general maintenance.*

The power cycle heat sink is designed to maintain the temperature of the water entering the CWS within the range of ~~*0*~~ 4.45*°C to 37.78°C. The CWS is designed to deliver water to the main condenser within a temperature range of 4.45°C to 37.78°C.* ~~*The 4.45°C minimum temperature is maintained, when needed, by warm water recirculation.*~~

The cooling water is circulated by ~~*at least three*~~ four 25% capacity *fixed speed motor-driven pumps* per unit*.*

The pumps are arranged in parallel and discharge into a common header. The discharge of each pump is fitted with a butterfly valve. This arrangement permits isolation and maintenance of any one pump while the others remain in operation.

The CWS and condenser ~~*is*~~ are *designed to permit isolation of each set of* ~~*the three series connected*~~ single pass *tube bundles to permit repair of leaks and cleaning of water boxes while operating at reduced power.*

10.4.5.2.3 System Operation

STP DEP 1.2-2

The circulating water pumps are tripped, ~~*and*~~ *the pump and condenser isolation valves are closed,* and the siphon break valves are opened *in the event of a system isolation signal from the condenser pit high-high level switches.* These condenser pit high-high level switches are two-out-of-four logic*. A condenser pit high level alarm is provided in the control room. The pit water level trip is set high enough to prevent inadvertent plant trips from unrelated failures, such as a sump overflow.*

STP DEP 10.4-2

Draining of any set of ~~*series connected*~~ *condenser water boxes is initiated by closing the associated condenser isolation valves and opening the drain connection and water*

box vent valve. When the suction standpipe of the condenser drain pump is filled, the pump is manually started. A low level switch is provided in the standpipe, on the suction side of the drain pump. This switch will automatically stop the pump in the event of low water level in the standpipe to protect the pump from excessive cavitation.

Before pump startup, the Turbine Service Water pumps provide for filling of the CWS. The condenser water box vent system assists with removing air from the system.

10.4.5.3 Evaluation

STP DEP 1.2-2

Based on the above conservative assumptions, the CWS and related facilities are designed such that the selected combination of plant physical arrangement and system protective features ensures that all credible potential circulating water spills inside the Turbine Building remain confined inside the ~~condenser pit~~ Turbine Building.

10.4.5.5 Instrumentation Applications

STD DEP T1 3.4-1

STP DEP 10.4-2

To exclude air in the condenser water boxes during normal operation, water box vent valves are automatically opened by the water level high signal. Manual controls for the vent valves are also provided.

A circulating pump starts at approximately 25% of rated flow when the main condenser water box outlet valves are partially opened for water filling. *Level switches or transmitters monitor water level in the condenser discharge water boxes and provide ~~a permissive for starting the circulating water pumps~~* confirmation of water fill in the circulating water system during the operation of the circulating water pumps. *These level switches ensure that the supply piping and the condenser water boxes are full of water prior to* the *circulating water pump ~~startup~~* achieving rated flow, *thus preventing water pressure surges from damaging the supply piping or the condenser.*

Monitoring the performance of the Circulating Water System is accomplished by differential pressure transducers across ~~each half~~ of the condenser with remote differential pressure indicators located in the main control room. Temperature signals from the supply and discharge sides of the condenser are transmitted to the ~~plant computer~~ Plant Information and Control Network *for recording, display and condenser performance calculations.*

~~*To prevent icing and freeze-up when the ambient temperature of the power cycle heat sink falls below 0°C, warm water from the discharge side of the condenser is recirculated back to the screen house intake. Temperature elements, located in each condenser supply line and monitored in the main control room, are utilized in throttling the warm water recirculation valve, which maintains the minimum inlet temperature of approximately 4.45°C.*~~

The recorded daily water temperature in the MCR was analyzed to evaluate the potential ice effects at the site. There is no risk of ice formation in the MCR (Section 2.4S.7). Therefore, design features, such as warm water recirculation, are not required to prevent icing and freeze up.

10.4.5.7 Portions of the CWS Outside of Scope of ABWR Standard Plant

STP DEP 10.4-2

The portion outside of the ABWR Standard Plant includes:

> ~~*screen house*~~ intake structure *and intake screens; pumps and pump discharge valves; and related support facilities such as makeup water, system water treatment, inventory blowdown, and general maintenance.*

The following site-specific supplement augments that provided in this subsection.

Circulating water enters the closed loop system via the intake structure located on the west side of the MCR north dike. The intake structure houses the eight circulating water pumps and respective screens and trash racks. Three dual flow screens and multiple trash racks serve each pump. The intake structure also accommodates the Turbine Service Water pumps which share pump bays with the circulating water pumps.

The circulating water is pumped through the main condenser and back to the MCR via a discharge outfall. The vacuum priming pumps, located at the CWS return piping on the MCR embankment, assist line priming during pump start-up, and evacuate air trapped at the high point of the CWS during operation.

10.4.5.7.2 Power Generation Design Basis (Interface Requirements)

The following site-specific supplements address the interface requirements for this subsection:

(1) The CWS design for the portions outside the scope of the reference ABWR DCD is compatible with the requirements as described in Subsection 10.4.5.2.

Four 25% capacity fixed speed circulating water pumps per unit discharge into a common header shown in Figure 10.4-3. The discharge of each pump is fitted with a motor operated butterfly valve. The circulating water is pumped through the main condenser and back to the MCR via a discharge outfall at a nominal rate of 272,550 m^3/h per unit. To provide capability for condenser waterbox isolation, isolation valves are located on the circulating water inlet and outlet lines.

The Hypochlorination System chlorinates the CWS to control biological fouling of the condenser tubes and circulating water piping. Liquid sodium hypochlorite is employed, thereby eliminating the potential gaseous chlorine hazards. The Hypochlorination System for the CWS has the capability to

inject a sodium bromide solution, with or without a biodispersant in conjunction with sodium hypochlorite for improving biological fouling control.

The CWS piping is designed to a pressure of 0.69 MPaG in consideration of normal and transient conditions. Materials selected for the CWS are those that withstand long-term corrosion.

Blowdown from the Ultimate Heat Sink (UHS) is pumped via the Reactor Service Water pumps into the CWS downstream of condenser outlet isolation valves for discharge to the MCR.

(2) As described in Subsection 10.4.5.3, the CWS, including those portions outside the scope of the reference ABWR DCD, is not a safety-related system. A postulated failure in the CWS in any portion outside the scope of the reference ABWR DCD is enveloped by the flooding resulting from an MCR breach as discussed in Subsection 2.4S.4.

(3) Pre-operational testing of the CWS is performed per Subsection 14.2.12.1.60. All active and selected passive components of the CWS are accessible for inspection and maintenance/testing during normal operation. The CWS is tested and checked for leakage integrity, as may be appropriate, following major maintenance and inspection.

(4) Local pressure gauges are furnished throughout the CWS, and temperature instruments with inputs to the Plant Information and Control System are furnished on the inlet and outlet circulating water lines to the condenser water boxes. Level indication is provided in the main control room for the MCR level and the level in each circulating water pump bay.

A traveling screen wash control system automatically initiates the cycling and cleaning of the traveling screens when high differential level is sensed across a screen. The screen wash control system shuts down on loss of spray header pressure. The traveling screens are cleaned of debris via high pressure spray water jets which are pressurized by the screen wash pumps. The trash racks are cleaned by a set of automatic raking systems per unit.

On top of each embankment cross-over pipeline, a vacuum breaker will be installed to break the vacuum upon a corresponding CWS shutdown or a power failure event.

(5) The design for the portions outside of scope of ABWR is in accordance with the flood protection requirements as described in Subsection 10.4.5.6. Flood protection is described in Section 3.4.

10.4.5.8 Power Cycle Heat Sink

The conceptual design information in this subsection of the reference ABWR DCD is replaced with the following site-specific supplement.

The STP 3 & 4 Power Cycle Heat Sink uses an MCR to reject power cycle waste heat. The MCR is formed by approximately 13 miles of embankment constructed above the natural ground surface, totally enclosing 7,000 acres of surface area at a normal maximum operating level of elevation 49 ft MSL. The MCR contains approximately 202,700 acre-feet of water at normal maximum operating elevation of 49 feet MSL. The MCR is further discussed in detail in Subsection 2.4S.8.

10.4.5.8.2 Power Generation Design Basis (Interface Requirements)

The following site-specific supplements address the interface requirements for this subsection:

(1) The power cycle heat sink design is compatible with the requirements as described in Subsection 10.4.5.2.

The heated circulating water from the main condenser is discharged to the MCR, where heat content of the circulating water is transferred to the ambient air via evaporative cooling and conduction. After passing through the MCR, the cooled water is recirculated back to the main condenser, to complete the closed cycle circulating water loop.

The Reservoir Makeup Pumping Facility (RMPF) supplies makeup water from the Colorado River to the MCR to replace water lost to evaporation, blowdown, and seepage.

The final plant discharge is the existing blowdown facility at the Colorado River, downstream of the RMPF. The blowdown facility will be used to limit the Total Dissolved Solids (TDS) concentration build-up in the MCR.

(2) As described in Subsection 10.4.5.3, the power cycle heat sink is not a safety-related system. Flooding resulting from an MCR breach is discussed in detail in Subsection 2.4S.4.

(3) The MCR is accessible for periodic water quality inspection and testing. The MCR embankment is accessible for visual inspection.

(4) Instrument applications for the power cycle heat sink are described in Subsection 10.4.5.5. The MCR is designed to maintain the temperature of the water entering the CWS within the range of 4.45°C to 37.78°C. Level indication is provided in the main control room for the MCR level and the level in each circulating water pump bay.

(5) The flooding resulting from an MCR breach is discussed in detail in Subsection 2.4S.4.

(6) The MCR continues to serve as the heat sink for the Turbine Service Water System in the event of loss of offsite power. The Turbine Service Water System (Section 9.2.16) is designed to operate with electrical power from the Combustion Turbine Generator in the absence of offsite power.

10.4.6.5 Instrumentation Applications

STD DEP 7.7-3

Other system instrumentation includes ~~turbidity and other~~ water quality measurements as necessary for proper operation of the filters, demineralizer, and miscellaneous support services, and programmable controllers for automatic supervision of the resin transfer and cleaning cycles. The control system prevents the initiation of any operation or sequence of operations which would conflict with any operation or sequence already in progress whether such operation is under automatic or manual control.

10.4.7.2.1 General Description

STD DEP 9.2-3

STD DEP 10.4-5

The Condensate and Feedwater System (Figures 10.4-5 and 10.4-6) consists of the piping, valves, pumps, heat exchangers, controls and instrumentation, and the associated equipment and subsystems which supply the reactor with heated feedwater in a closed steam cycle utilizing regenerative feedwater heating. The system described in this subsection extends from the main condenser outlet to (but not including) the seismic interface restraint outside of containment. The remainder of the system, extending from the restraint to the reactor, is described in Chapter 5. Turbine cycle steam is utilized for a total of six stages of closed feedwater heating. The drains from each stage of the low-pressure feedwater heaters are cascaded through successively lower pressure feedwater heaters except the lowest and second lowest pressure feedwater heaters which drain to the low pressure heater drain tanks for each string. The drains from each low pressure heater drain tank flow into the external drain coolers of each lowest pressure feedwater heater and finally *to the main condenser. The high pressure heater drains are pumped backward to the reactor feedwater pumps suction. The cycle extraction steam, drains and vents systems are illustrated in Figures 10.4-7 and 10.4-8.*

The CFS consists of four ~~33-50%~~ 33% *capacity condensate pumps (three normally operating and one on automatic standby),* four 33% capacity condensate booster pumps, (three normally operating and one on automatic standby), *~~three normally operated 33-65%~~* four 33% *capacity reactor feedwater pumps* (three normally operating, one on automatic standby), *four stages of low-pressure feedwater heaters, and two stages of high- pressure feedwater heaters, piping, valves, and instrumentation. The condensate pumps take suction from the condenser hotwell and discharge the deaerated condensate into one common header which feeds the condensate filter/demineralizers. Downstream of the condensate demineralizers, the condensate is taken by a single header and flows ~~in parallel through five~~* through the *auxiliary condenser/coolers, one gland steam exhauster condenser~~,~~ and two sets of SJAE condensers, ~~offgas recombiner condenser (coolers)~~. The condensate then branches into three parallel strings of low pressure feedwater heaters. Each string*

contains four stages of low-pressure feedwater heaters. The strings join together at a common header which is routed to the suction of the reactor feedwater pumps.

Another input to the feedwater flow consists of the drains which are pumped backward and injected into the feedwater stream at a point between the fourth stage low-pressure feedwater heaters and the suction side of the reactor feed pumps. These drains, which originate from the crossaround steam moisture separators ~~and reheaters~~ and from the two sets of high-pressure feedwater heaters, are directed to the heater drain ~~tanks~~ tank*. The ~~reheater and top~~* HP *heater drains are deaerated in the ~~crossaround heaters~~* heater drain tank *so that, after mixing with condensate, the drains are compatible with the reactor feedwater quality requirements for oxygen content during normal power operations. ~~Each~~* The *heater drain pump takes suction from the heater drain tank and injects the deaerated drains into the feedwater stream at the suction side of the reactor feed pumps.*

A bypass is provided around the reactor feedwater pumps to permit supplying feedwater to the reactor during early startup without operating the feedwater pumps, using only the condensate pump and/or condensate booster pump *head.*

Another bypass~~, equipped with a feedwater flow control valve,~~ is provided around the high-pressure heaters to ~~perform two independent functions. During startup, the bypass and its flow control valve are used to regulate the flow of feedwater supplied by either the condensate pumps or the reactor feed pumps operating at their minimum fixed speed. During power operation, the heater bypass function is to~~ maintain full feedwater flow capability when a high-pressure heater string must be isolated for maintenance.

During startup, the flow control valve is used to regulate the flow of feedwater supplied by either the condensate pumps or the reactor feed pumps operating at their minimum fixed speed.

To minimize corrosion product input to the reactor during startup, recirculation lines to the condenser are provided from the ~~reactor feedwater pump~~ condensate booster pump *suction* and discharge *header and from the high-pressure feedwater heater outlet header.*

10.4.7.2.2 Component Description

STD DEP 10.4-5

Condensate Booster Pumps - Four identical and independent, 33% capacity, fixed speed motor-driven condensate booster pumps are provided between the condensate purification system and the low pressure feedwater heaters. Three pumps normally operate manually in parallel, with the fourth pump in standby. The condensate booster pumps, in combination with the main condensate pumps, provide the required NPSH for the main feedwater pumps and achieve the design pressure for the condensate purification system.

Low-pressure Feedwater Heaters*—Three parallel and independent strings of four closed feedwater heaters are provided, and one string is installed in each condenser neck. The heaters have integral drain coolers* except for the lowest pressure heaters which have separate drain coolers, *and their drains are cascaded to the next lower stage heaters of the same string except for the lowest* and second lowest *pressure heaters which drain to* the low pressure drain tanks, drain coolers of the lowest pressure heaters and finally to *the main condensers*, successively*. The heater shells are either carbon steel or low alloy ferritic steel, and the tubes are stainless steel. Each low pressure feedwater heater string has an upstream and downstream isolation valve which closes on detection of high level in any one of the low pressure heaters in the string.*

High-pressure Feedwater Heaters*—Two parallel and independent strings of two high- pressure feedwater heaters are located in the high-pressure end of the Turbine Building. The No. 6 heaters, which have integral drain coolers, are drained to the No. 5 heaters. The No. 5 heaters, which are condensing only, drain to ~~their respective heater~~ the* heater *drain ~~tanks~~* tank*. The heater shells are carbon steel, and the tubes are stainless steel.*

Heater string isolation and bypass valves are provided to allow each string of high-pressure heaters to be removed from service, thus slightly reducing final feedwater temperature but requiring no reduction in ~~plant~~ reactor *power. The heater string isolation and bypass valves are actuated on detection of high level in either of the two high-pressure heaters in the string.*

The startup and operating ~~vents~~ vents *from the steam side of ~~the~~* each *feedwater ~~heaters are~~* heater is *piped to the main condenser. ~~except. for the highest pressure heater operating vents which discharge to the cold reheat lines.~~ Discharges from shell relief valves ~~on the steam side of~~* for *the feedwater heaters are piped to the main condenser.*

High Pressure ***Heater Drain Tank****—*A high pressure heater *~~Heater~~ drain ~~tank(s) are~~* tank is *provided. Drain tank level is maintained by the heater drain pump control valves in the drain pump discharge and recirculation lines.*

The drain ~~tanks~~ tank *and tank drain lines are designed to maintain the drain pumps ~~available~~* net positive *suction head* (NPSH) *in excess of the pump required minimum under all anticipated operating conditions including, particularly, load reduction transients. This is achieved mainly by providing a large elevation difference between tank~~s~~ and pumps (approximately ~~15.24m~~* 14m*) and optimizing the drain lines which would affect the drain system transient response, particularly the drain pump suction line.*

Low Pressure Heater Drain Tanks - Three low pressure drain tanks are provided which receive the drains from the No.1 and No.2 feedwater heaters of each string, and drain to separate drain coolers of each lowest pressure heater. The drain tanks are installed at lower level than the No.1 and No.2 heaters to provide gravity-assisted drains.

Heater Drain Pumps— ~~*Two*~~ Four 33% *motor-driven heater drain pumps* are provided. Three pumps normally *operate in parallel, each taking suction from the heater drain tank and discharging into the suction side of the reactor feedwater pumps.* ~~*The drain system design allows each heater drain pump to be individually removed from service for maintenance while the balance of the system remains in operation, while the affected string drains dump to the condenser.*~~

Reactor Feedwater Pumps— ~~*Three*~~ Four *identical and independent* ~~*33–65%*~~ 33% *capacity reactor feedwater pumps (RFP) are provided.* ~~*The*~~ *Three pumps* normally ~~*manually*~~ *operate in parallel and discharge to the high-pressure feedwater heaters. The pumps take suction downstream of the last stage low-pressure feedwater heaters and discharge through the high-pressure feedwater heaters. Each pump is driven by an adjustable speed drive.*

Isolation valves are provided which allow each reactor feed pump to be individually removed from service for maintenance, while the plant continues operation at full power on the three ~~*two*~~ *remaining pumps.*

10.4.7.2.3 System Operation

Normal Operation *- Under normal operating conditions, system operation is automatic. Automatic and redundant level control systems control the levels in all feedwater heaters, MS/RH drain tanks, the heater drain tanks, and the condenser hotwells. Feedwater heater levels are controlled by modulating drain valves. Control valves in the discharge and recirculation lines of the heater drain pumps control the level in the heater drain* ~~*tanks*~~ tank*. Valves in the makeup line to the condenser from the condensate storage tank and in the return line to the condensate storage tank control the level in the condenser hotwells.*

During power operation, feedwater flow is automatically controlled by the reactor feedwater pump speed that is set by the feed pump speed control system. The control system utilizes measurements of steam flow, feedwater flow, and reactor level to regulate the feedwater pump speed. During startup, feedwater flow is automatically regulated by the ~~*high-pressure heater bypass*~~ *flow control valve.*

10.4.7.5 Instrumentation Applications

Feedwater flow-control instrumentation measures the feedwater discharge flow rate from each reactor feed pump ~~*and the heater bypass startup flow control valve*~~*.* ~~*These*~~ The *feedwater system flow measurements are used by the Feedwater Control System (Subsection 7.7.1.4) to regulate the feedwater flow to the reactor to meet system demands.*

Pump flow is measured on the pump inlet line, and flow controls provide automatic pump recirculation flow for each reactor feedwater pump. Automatic and redundant controls also regulate the condensate flow through the auxiliary condensers (~~*offgas recombiner condenser/coolers,*~~ *gland steam condenser, and SJAE condensers) and maintains condensate pump minimum flow. Measurements of pump suction and*

discharge pressures are provided for all pumps in the system. Main feedpump suction pressure, discharge pressure and flow are indicated in the main control room.

10.4.10 COL License Information

10.4.10.1 Radiological Analysis of the TGSS Effluents

The following site-specific supplement addresses COL License Information Item 10.6.

The TGSS is designed to provide non-radioactive steam to the turbine gland seals. However, performance of a radiological analysis of the TGSS effluents is included in the offsite dose calculation manual (ODCM) that contains the methodology and parameters used for calculation of offsite doses resulting from gaseous and liquid effluents, including the turbine gland seal steam condenser exhaust. The ODCM includes operational setpoints for the radiation monitors and addresses programs for monitoring and controlling the release of radioactive material to the environment, which eliminates the potential for unmonitored and uncontrolled release. The ODCM also includes planned discharge flow rates, including the level at which the TGSS steam supply will be switched over to auxiliary steam.

Table 10.4-1 Condenser Design Data

Item	
Condenser Type	*~~Transversal~~* **Single Pressure**, *3 shells*, *~~Reheating/~~Deaerating*
Design duty, kW-total 3 shells	*~~254.91 x 10^4~~* **251.50 x 10^4**
Shell pressures w/~~26.7~~ **32.2***°C Circ. water, ~~MPaA~~* **kPaA**	*~~0.007,0.009,0.012~~* **8.90**
Circulating water flow rate, m3/h	*~~136,290~~* **272,550**
Tubeside temp. rise-total 3 shells, °C	*~~16.8~~* **7.99**
Shell design pressure range, MPaA	*0 to 0.207****
Hotwell storage capacity-total 3 shells, L	*~~378,540~~* **355,780**
Channel design pressure range, MPaA	*~~0 to 0.586~~* **0.70**
Surface Area, cm2	*~~929.03 x 10^6~~* **1077.97x 10^6**
Number of tube passes per shell	*1*
Applicable codes and standards	*~~ASME Sect. VIII, Div. I,~~ ANSI Standards, HEI Standards for Steam Surface Condensers*

~~** Condenser surface and performance parameters are site dependent. Values quoted above are for reference purposes only.*~~

* The value 207 kPaA is applied for the head of hydrostatic test.

Table 10.4-2 Main Condenser Evacuation System

Steam Jet Air Ejector (SJAE) System	
Number of ejector stages	*2*
Number of intercondenser	*2*
Number of ejector sets and capacity	*2 x 100%*
Required supply steam pressure, MPaA	*~~0.828~~* **1.47**
Normal steam supply source	*~~Cross around~~* **Main Steam**
Start-up Vacuum Pump System	
Number of pumps and capacity	*~~1~~* **2 x 100%**

Table 10.4-3 Circulating Water System

Circulating Water Pumps	
Number of Pumps	~~*3**~~ **4**
Pump type	*Vertical,* ~~*wet pit*~~ **concrete volute**
Unit flow capacity, m^3/h	~~*~45, 430*~~ **~68,140**
Driver type	~~*Fixed speed*~~ **Induction** *motor*

~~** Number of pumps and pump flow are site dependent. Values quoted above are for reference purposes only.*~~

Table 10.4-4 Condensate Purification System

Condensate Filters	
Filter type	*High efficiency (hollow fiber or equivalent)*
Number of vessels	*3**
Design flow rate per vessel, m^3/h	~~*1704*~~ **2300**
Design pressure, MPaG	*~ 4.81*
Condensate Polishers	
Polisher type	*Bead resin, mixed bed*
Number of vessels	*6 (5 operat., 1 standby)**
Design flow rate per vessel, m^3/h	**~** ~~1022~~ **1380**
Specific flow rate, $L/s/m^2$	*Normal: 0.234* (*Max: 0.352*)
Design pressure, MPaG	*~ 4.81*

* *The number of demineralizers and filter vessels are dependent on the final Turbine Building design and are quoted here for reference purposes only.*

Table 10.4-5 Condensate and Feedwater System Design Data

Condensate Piping (Reactor Feedwater Pump Inlet Condition)	
Normal flowrate~~~~, kg/h*	~~*~3,803,850*~~ **~ 7629** x **10^3**
Number of lines	~~*3*~~ **4**
Nominal pipe size	~~*500A*~~ **550A**
Fluid velocity, ~~cm/s~~ **m/s**	~~*~396.24*~~ **~ 3.7**
Fluid temperature, °C	~~*157.22*~~ **158.5**
Design code	*ANSI B31.1*
Seismic design	*Analyzed for SSE design loads*
Main Feedwater Piping (No.6 Feedwater Heater Outlet Condition)	
Design (VWO) flowrate, kg/h	~~*~8,164,620*~~ **~ 7986** x **10^3**
Number of lines	*2*
Nominal pipe size	~~*550A*~~ **650A**
Fluid velocity, m/s	~~*~185.8*~~ **~ 4.7**
Fluid temperature, °C	~~*223.89*~~ **217.7**
Design code	*ANSI B31.1*
Seismic design	*Analyzed for SSE design loads*

~~* *Based on VWO feedwater flow and heater drain pump out of service.*~~

Table 10.4-6 Condensate and Feedwater System Component Failure Analysis

Component	Failure Effect On Train	Failure Effect on System	Failure Effect on RCS
Condensate pump	*None. Condenser hotwells and condensate pumps are interconnected.*	*Operation continues at full capacity,* **using parallel pumps and auto start of standby pump.** *~~(condensate pump capacity is 50%).~~*	*None*
Condensate Booster Pump	**None. Suction line and condensate booster pumps are interconnected.**	**Operation continues at full capacity, using parallel pumps and auto start of the standby condensate booster pump.**	**None**
No.1, 2, 3 or 4 feedwater heater	*One train of No. 1, 2, 3 and 4 feedwater heaters is shut down. Remaining trains continue to operate.*	*Operation continues at reduced capacity, using parallel feedwater heaters. Load must not exceed turbine vendor's requirements to protect the LP turbines from excessive steam flow.*	*Reactor control system reduces reactor power to a level compatible to the safe LP turbine operation.*
Heater drain tank	*Drains from affected heater drain subsystem are dumped to condenser.*	*~~50% of the h~~***H***igh pressure drains are dumped to condenser.*	*~~None. The condensate and drain systems are designed to permit operation with normal full reactor power, feedwater temperature, and flow rate.~~* **Reactor control system reduces reactor power to a level compatible with the condensate and feedwater capacity.**
Heater drain pump	*~~Drains from affected heater drain subsystem are dumped to condenser.~~* **None**	*~~50% of HP feedwater heater drains are dumped to condenser.~~***Operation continues at full capacity with auto start of standby pump.**	*None. ~~The condensate and drain systems are designed to permit operation with normal full reactor power, feedwater temperature, and flow rate.~~*
Reactor feedwater pump	*None. Feedwater pumps are interconnected.*	*Operations ~~may~~ continue at full capacity~~, using 2 parallel pumps. Each reactor feedwater pump capacity is 65%~~* **with auto start of standby pump.**	*None*

Table 10.4-6 Condensate and Feedwater System Component Failure Analysis (Continued)

Component	Failure Effect On Train	Failure Effect on System	Failure Effect on RCS
No. 5 or 6 feedwater heater	*One train is shut down.*	*CFS operation continues at capacity, using parallel train and bypass line.*	*Reactor control system adjusts the reactor to permit continued operation with the reduced feedwater temperature.*

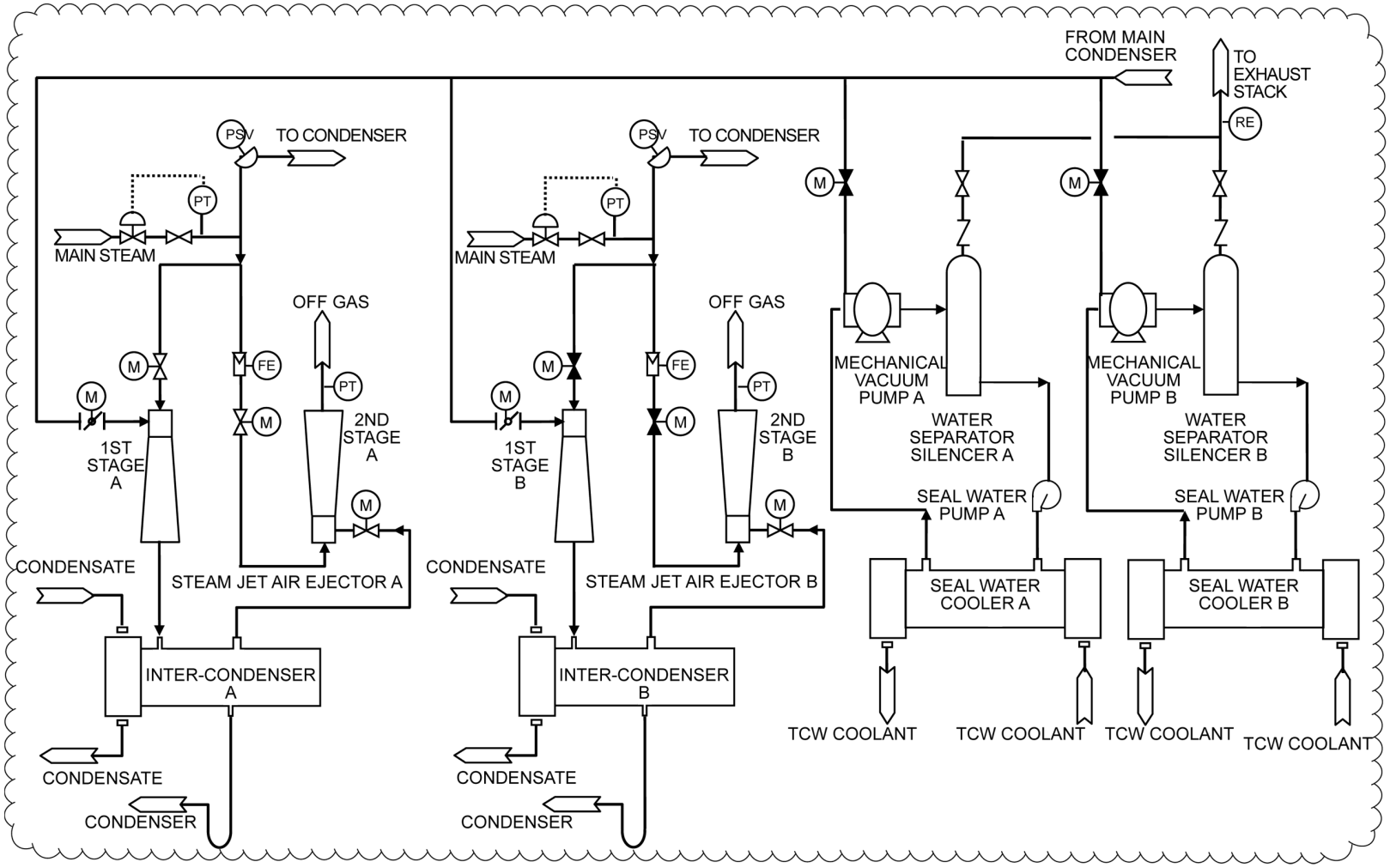

Figure 10.4-1 Main Condenser Evacuation System

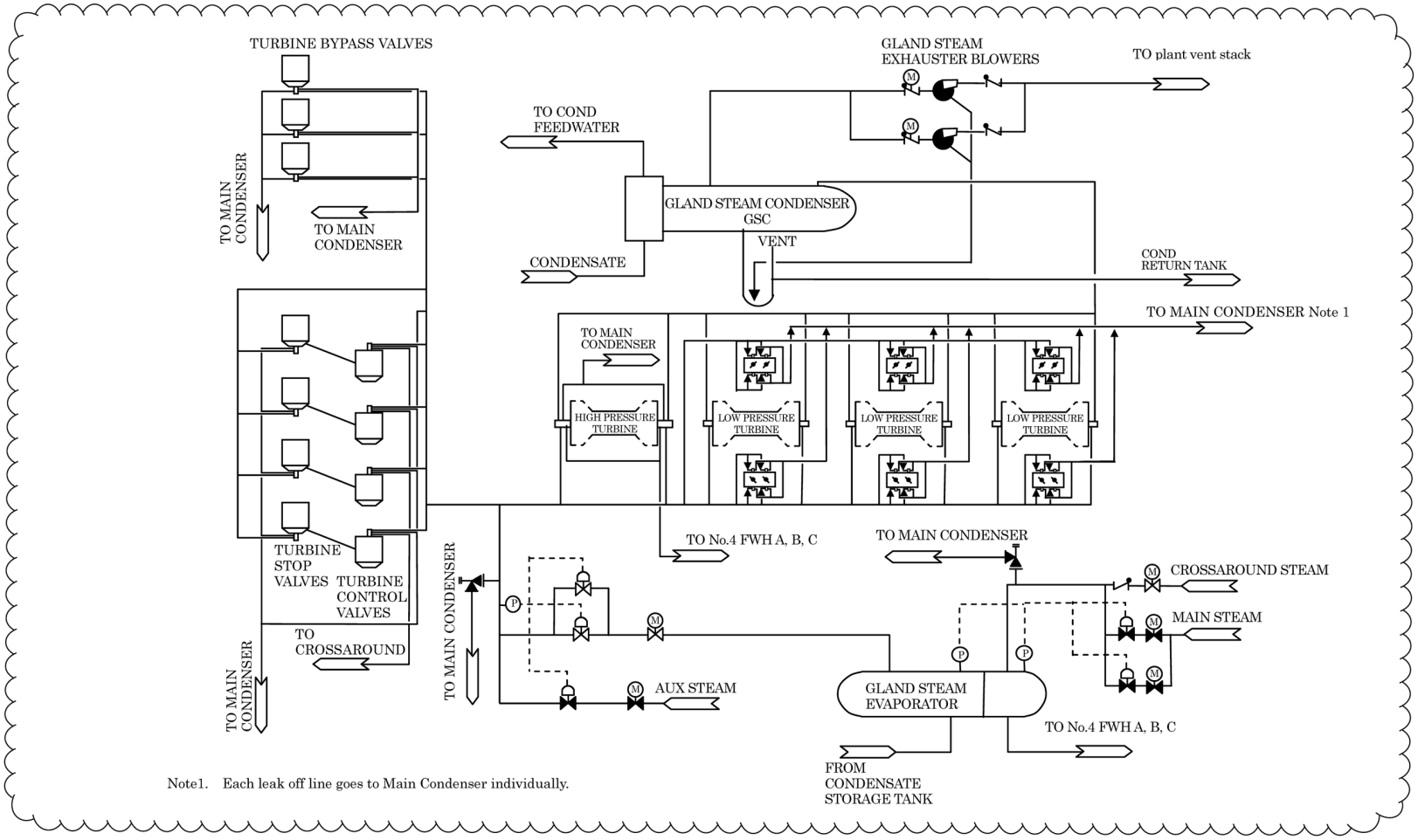

Figure 10.4-2 Turbine Gland Seal System

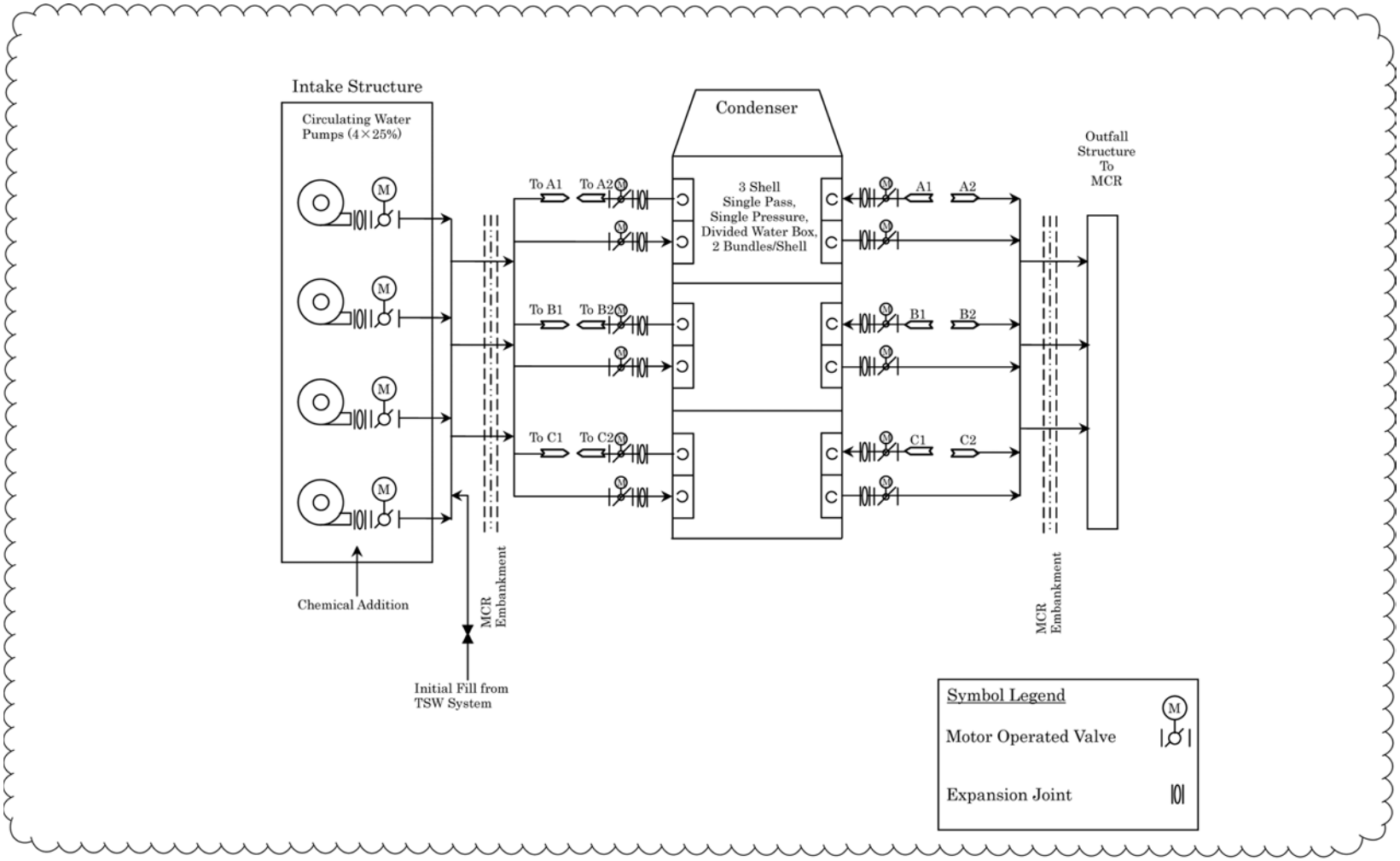

Figure 10.4-3 Circulating Water System

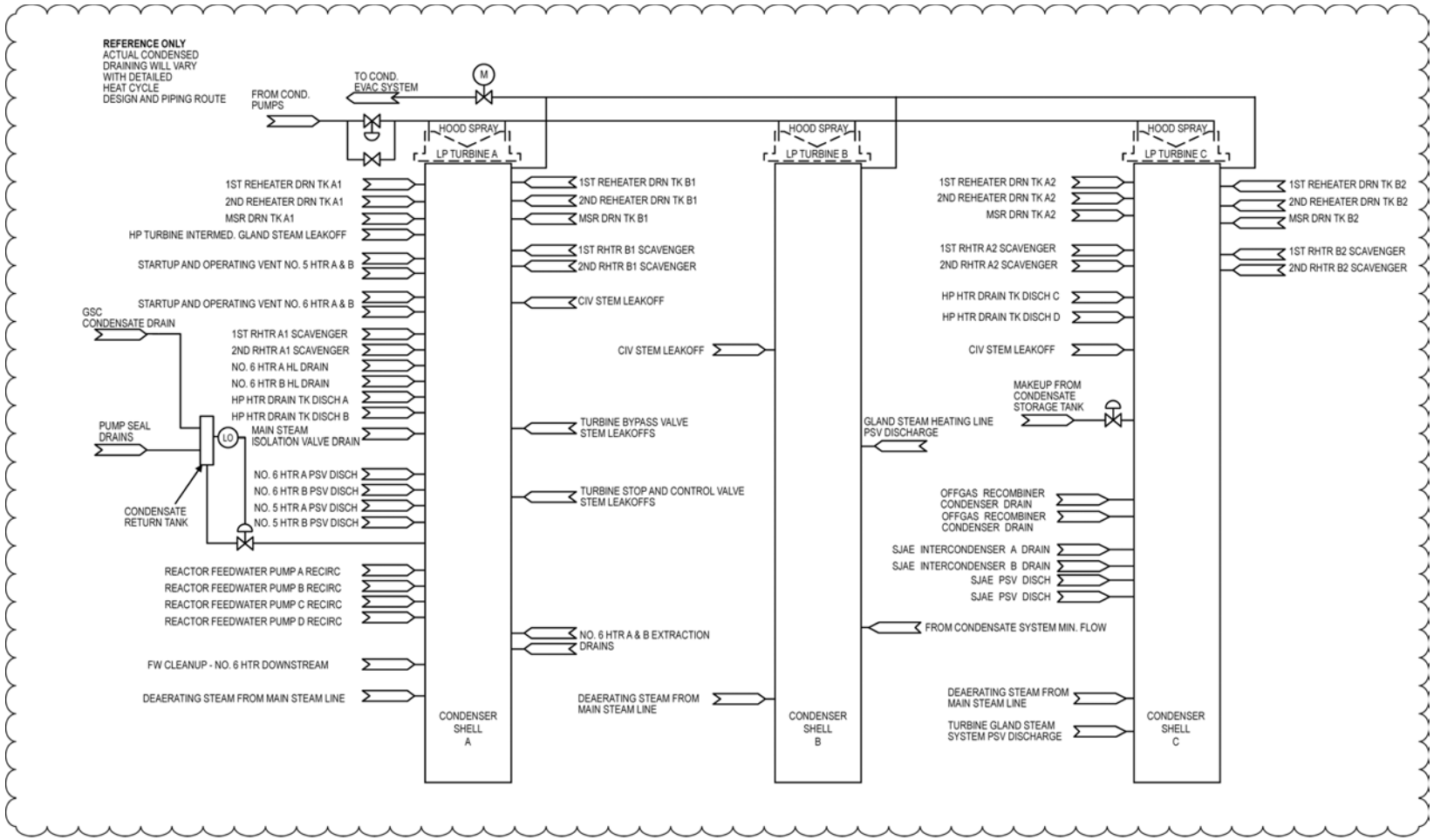

Figure 10.4-5 Condensate System

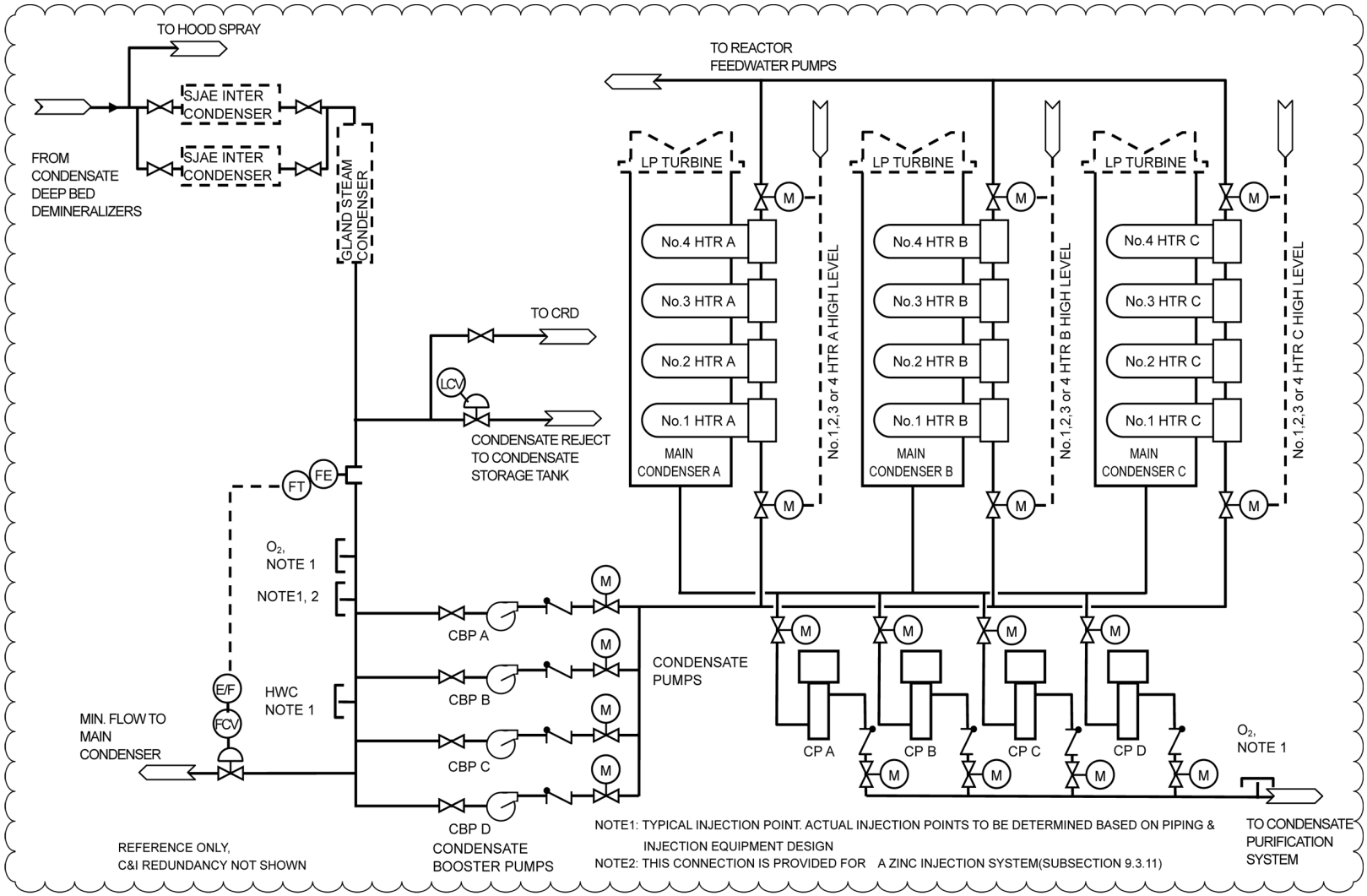

Figure 10.4-5 Condensate System (Continued)

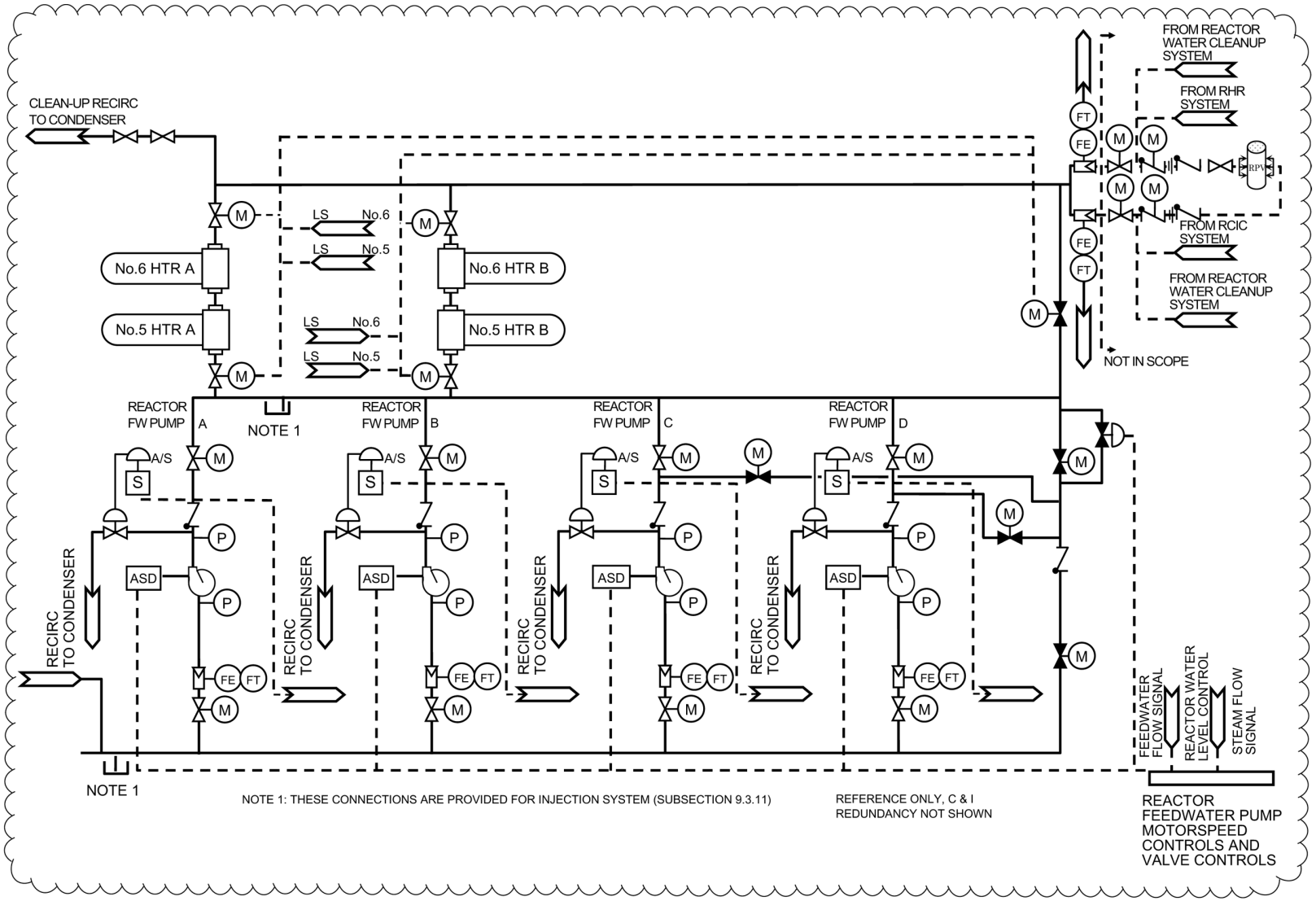

Figure 10.4-6 Feedwater System

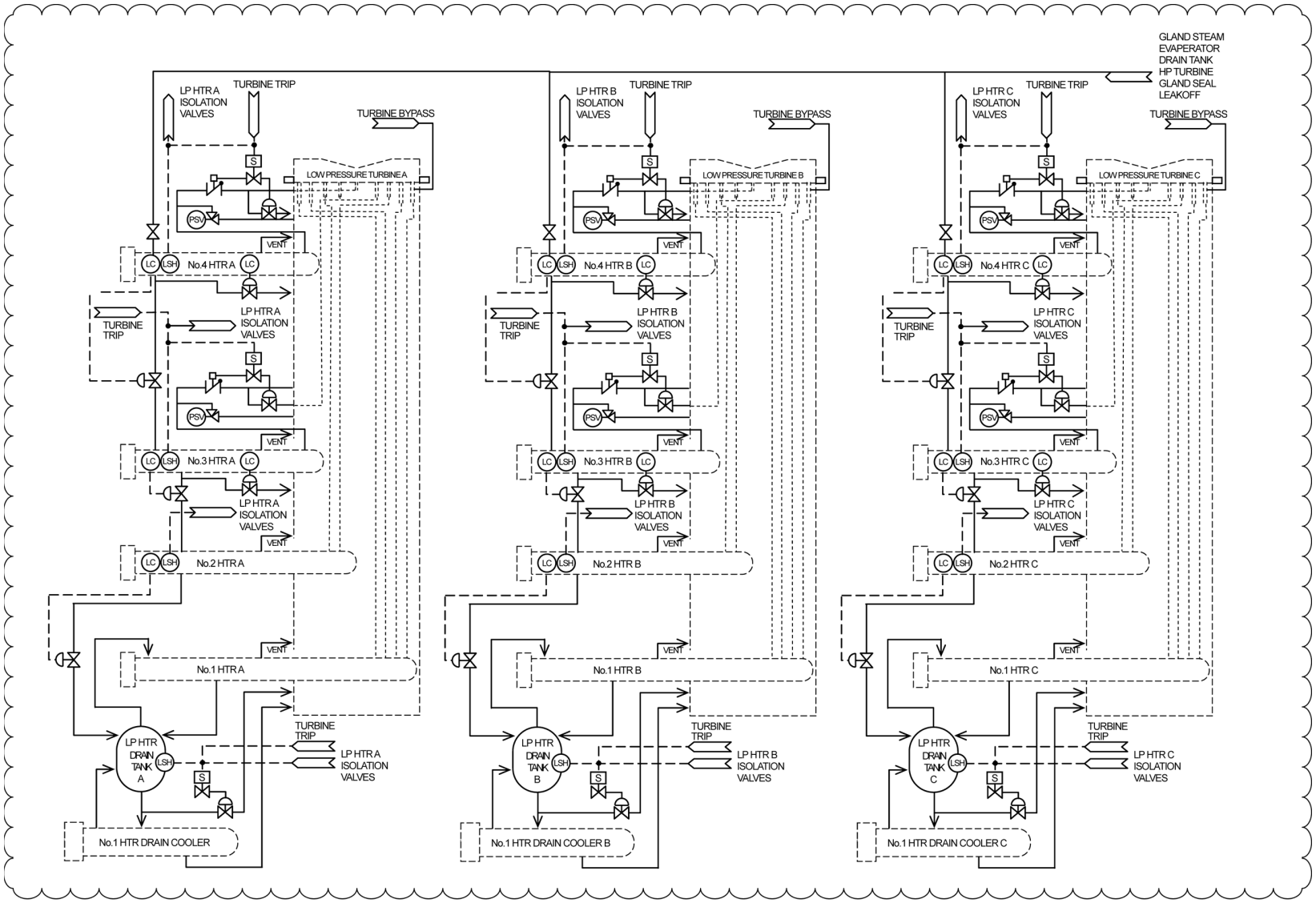

Figure 10.4-7 LP Extraction Steam Drains and Vent System

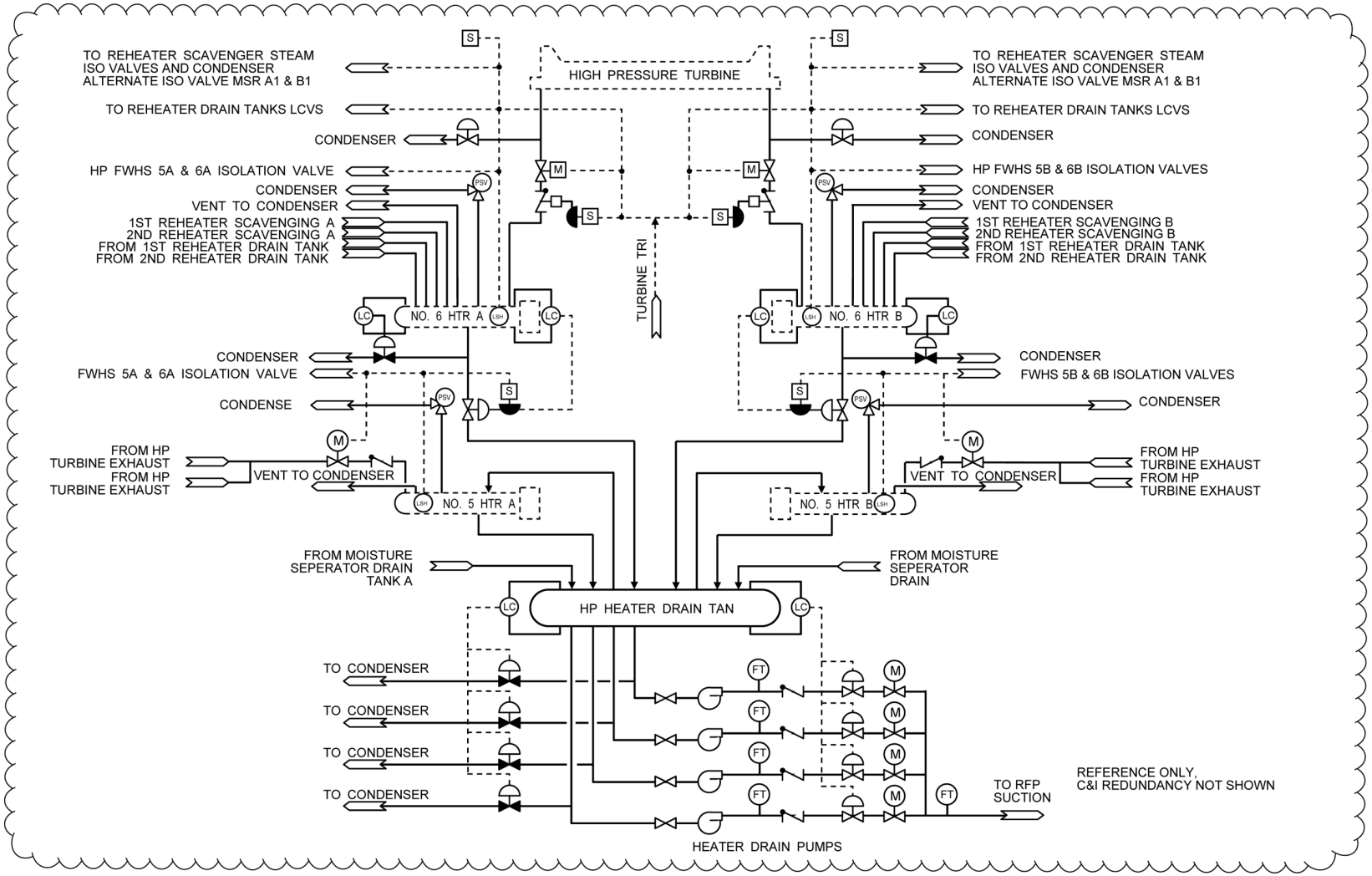

Figure 10.4-8 Extraction Steam Drains and Vent System

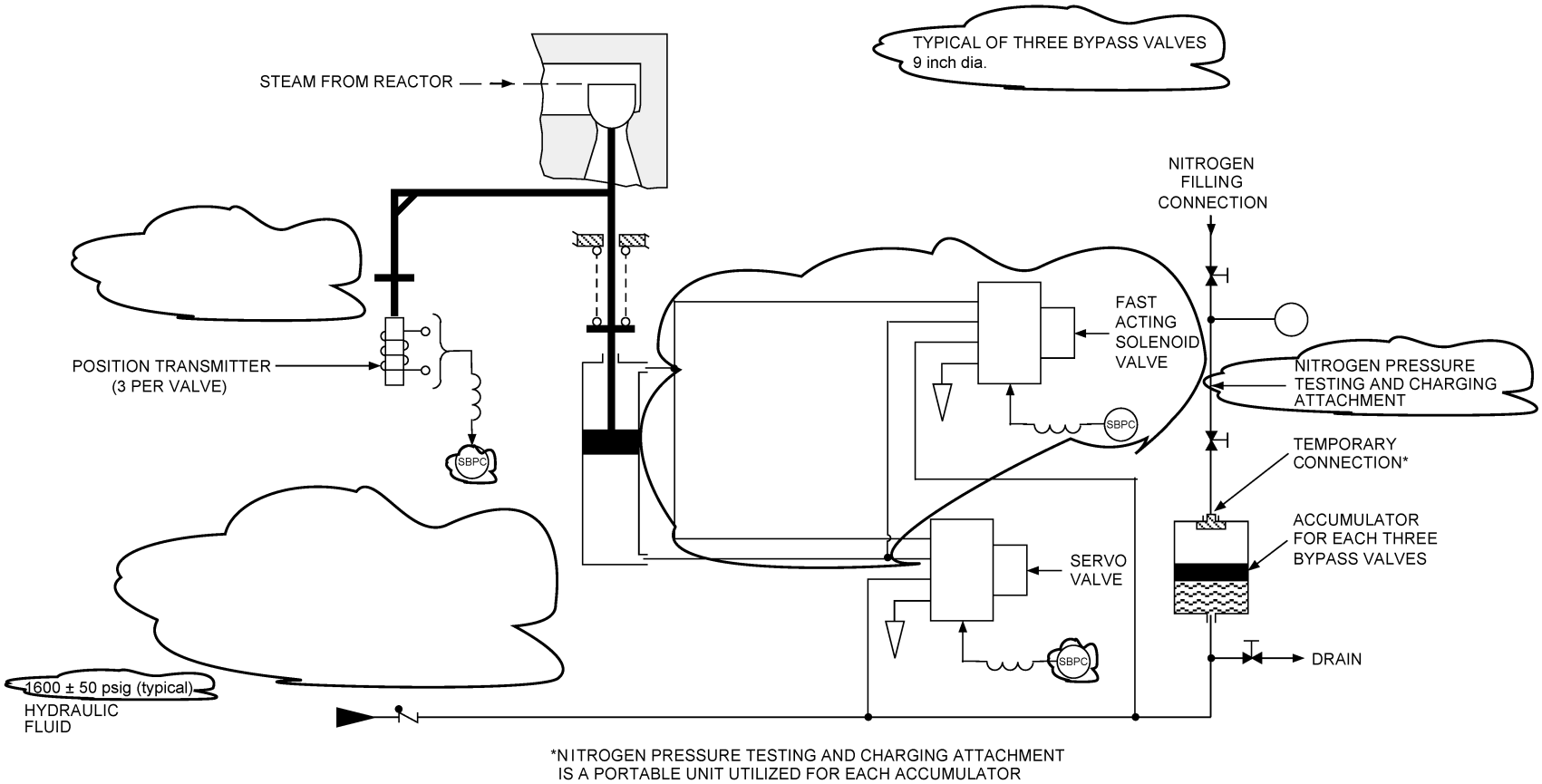

Figure 10.4-9 Bypass Valve Control, Electro-Hydraulic Control Unit

11.0 Radioactive Waste Management

11.1 Source Terms

The information in this section of the reference ABWR DCD, including all subsections and tables, is incorporated by reference with ~~no departures or supplements~~the following departure.

STD DEP 10.1-3 (Table 11.1-6)

Table 11.1-6 Plant Parameters for Source Term Adjustment

Parameter	Reference Plant	ABWR
Thermal Power, MW	*3400*	*3926*
Reactor Water Mass, kg	*1.73 E+05*	*3.06 E+05*
Cleanup System Flow Rate kg/h	*5.9 E+04*	*1.52 E+05*
Steam Flow Rate kg/h	*6.81 E+06*	~~*7.63 E+06*~~7.65 E+06
Ratio of Condensate Demineralizer Flow Rate to Steam Flow Rate	*1.0*	*
The above values are expressed in the units required by the procedure in ANSI/ANS-18.1.		

** See Table 11.1-7.*

11.2 Liquid Waste Management System

This section of the reference ABWR DCD including all subsections, figures, and tables is replaced completely. This is due to a departure in the design of the liquid radioactive waste system. The departure includes the use of mobile technology and deletes the forced-circulation concentrator system.

STD DEP 11.2-1

11.2.1 Design Basis

11.2.1.1 Design Objective

The Liquid Waste Management System (LWMS) is designed to control, collect, process, handle, store, and dispose of liquid radioactive waste generated as the result of normal operation and anticipated operational occurrences, including refueling operation and back to back refueling.

The LWMS is housed in the radwaste building and consists of the following four subsystems:

- Low conductivity (equipment) drain subsystem
- High conductivity (floor) drain subsystem
- Detergent drain subsystem
- Chemical drain subsystem

The LWMS Process Flow Diagram is provided in Figure 11.2-1. Radwaste System Piping and Instrumentation Diagrams are provided in Figures 11.2-2. The radwaste building general arrangement drawings are provided in Figures 1.2-23a through 1.2-23e. The LWMS equipment codes and component capacities are provided in Tables 11.2-1 and 11.2-4, respectively. Capability of the LWMS to process expected waste is provided in Table 11.2-2. The process decontamination factors are provided in Table 11.2-5. Normal and maximum daily inputs for the LWMS subsystems are provided in Table 11.2-6.

The equipment and high conductivity drainage collection system, a major input source to the LWMS, is described in Subsection 9.3.8.

Process and effluent radiological monitoring and sampling systems are described in Section 11.5.

The LWMS complies with Regulatory Guide (RG) 1.143 guidance regarding liquid radwaste treatment systems. LWMS component classifications are described in Table 3.2-1 (K1, U13).

No subsystems of the LWMS and the radwaste building that house the LWMS are shared between STP 3 & 4.

11.2.1.2 Design Criteria

The criteria considered in the design of this system include (1) minimization of solid waste shipped for burial, (2) reduction in personnel exposure, (3) minimization of offsite releases, and (4) maximizing the quality of water returned to the primary system. 'Minimization' is based on good engineering practice, and/or cost benefit analysis to keep waste generation and dose as low as reasonably achievable.

The design criteria for the LWMS are:

- The LWMS is designed so that no potentially radioactive liquids can be discharged to the environment unless they have been sampled and verified to be within the limits for discharge. Off-site radiation exposures on an annual average basis are within the limits of 10 CFR 20 and 10 CFR 50 Appendix I.

- The LWMS is designed to meet the requirements of General Design Criteria (GDC) 60 and 61 and the guidance of RG 1.143. RG 1.143 provides design guidance in regard to natural phenomena hazards, internal and external man-induced hazards, and quality group classification and quality assurance provisions for radioactive waste management systems; structures and components. Further, it describes provisions for mitigating Design Basis Accidents (DBA) and controlling releases of liquids containing radioactive materials, e.g., spills or tank overflows, from all plant systems outside reactor containment (see Table 11.2-1 Equipment Codes for Radwaste Equipment from RG 1.143).

- The LWMS is designed to keep the exposure to plant personnel "As Low As Reasonably Achievable" (ALARA) during normal operation and plant maintenance, in accordance with RG 8.8.

- All atmospheric liquid radwaste tanks are provided with an overflow connection at least the size of the largest inlet connection. The overflow is connected below the tank vent and above the high-level alarm instrument location. Each collection tank room is designed to contain the maximum liquid inventory in the event that the tank ruptures as described in Subsection 11.2.2.5. The radwaste building walls are sealed and coated. Tank cubicle liners are utilized to prevent accidental releases to the environment.

- The system is designed to control releases of radioactive materials within the numerical design objectives of Appendix I to 10 CFR 50.

- The system is designed to provide sufficient capacity, redundancy, and flexibility to meet the concentration limits of 10 CFR 20 during periods of equipment downtime and during operation at design basis fuel leakage (see Table 11.2-2 for capability of the four subsystems to process maximum inputs).

Compliance with numerical guidelines in Appendix I to 10 CFR 50 for offsite radiation doses as a result of liquid effluents during normal plant operations, including anticipated operational occurrences, is provided in Subsection 12.2.2.2. To demonstrate compliance with Section II, paragraph D of Appendix I, a cost-benefit

analysis was performed in accordance with the guidance of Regulatory Guide 1.110. The analysis postulated the addition of three (3) augments to the LWMS of reasonably demonstrated technologies. These augments were:

- the addition of one low capacity evaporator to the liquid discharge stream, or
- the addition of the lowest capacity demineralizer to the liquid discharge stream, or
- the addition of one 10,000 gallon holdup tank to the liquid discharge stream(least cost option).

Regulatory Guide 1.110 cost data used to evaluate the three augments to the LWMS are summarized in the Table 11.2-7.

The total annual costs associated with implementing the three augments to the LWMS and the corresponding benefit-cost ratio are determined using the methodology prescribed in Regulatory Guide 1.110, the cost data provided in Table 11.2-7, and the collective 50 mile total body dose (due to liquid releases) that is presented in Table 5.4-9 of the STP 3 & 4 Environmental Report. The collective 50 mile total body dose is conservatively considered to be the total dose saved as a result of implementing each augment to the LWMS. The total annual cost of each augment to the LWMS and the associated benefit cost ratio are summarized in Table 11.2-8. These results demonstrate that the total annual cost associated with each augment to the LWMS, including the least cost option is substantially larger than the benefit derived from each augment. The cost-benefit numerical analysis, required by 10 CFR 50 Appendix I Section II Paragraph D, demonstrates that the addition of items to the LWMS of reasonably demonstrated technology will not provide a favorable cost benefit. Therefore, the STP 3 & 4 prescribed LWMS meets the numerical guides for dose design objectives.

Table 11.2-7 REGULATORY GUIDE 1.110 COST DATA (1)
(Costs are in 1000s of 1975 Dollars)

Cost- Benefit Parameter	15 gpm Radwaste Evaporator	50 gpm Demineralizer (BWR 2nd Waste Demineralizer in Series)	10,000 Gallon Tank
Equipment and Material Direct Cost (2)	386	43	55
Direct Labor Cost (DLC)(2)	201	29	43
Labor Cost Correction Factor (LCCF)(3)	1	1	1
Annual Operating Cost (AOC)	20	15	1
Annual Maintenance Cost (AMC)	30	5	2

Notes:
(1) All costs are on a per unit basis.
(2) Equipment and Material Direct Costs and Direct Labor Costs are from Table A-1 of Regulatory Guide 1.110.
(3) The Labor Cost Correction Factors are from Table A-4 of Regulatory Guide 1.110. The lowest LCCF is chosen which maximizes the benefit.
(4) The Annual Operating Costs are from Table A-2 of Regulatory Guide 1.110.
(5) The Annual Maintenance Costs are from Table A-3 of Regulatory Guide 1.110.

Table 11.2-8 Liquid Radwaste Augment Benefit Cost Ratio Summary

Augments	Total Annual Costs (1975 Dollars)	Collective 50 Mile Total Body Dose Saved per Year (Person-Rem)	Benefit in 1975 Dollars (1000 dollars x Person Rem Saved)	Benefit Cost Ratio
15 gpm Radwaste Evaporator	117,940	0.003	3.00	2.54E-05
50 gpm Demineralizer (BWR 2nd Waste Demineralizer in Series)	28,330	0.003	3.00	1.06E-04
10,00 Gallon Tank	14,340	0.003	3.00	2.09E-04

Process and effluent radiological monitoring systems are described in Section 11.5.

The LWMS has no safety-related function. Failure of the system does not compromise any safety-related system or component nor does it prevent shutdown of the plant. No interface with the Class IE electrical system exists.

STP 3 & 4 is responsible, initially and subsequently, for the identification of mobile/portable LWMS connections that are considered non-radioactive, but later may become radioactive through interfaces with radioactive systems; i.e., a non-radioactive system becomes contaminated due to leakage, valving errors or other operating conditions in radioactive systems. STP 3 & 4 uses operating procedures to ensure the guidance and information in Inspection and Enforcement (IE) Bulletin 80-10 (May 6, 1980) is followed. The LWMS mobile systems are not connected to the potable or sanitary water system. All non-radioactive connections (e.g., makeup water for flushing, service air for sluicing process) to the radwaste system (including the mobile system) contain double isolation e.g., check valves and isolation valve to prevent cross contamination.

Subsection 11.2.1.2.4 addresses design requirements to minimize contamination of the facility and environment, facilitate decommissioning, and minimize the generation of radioactive waste, in compliance with 10 CFR 20.1406 including design requirements for connections that are considered non-radioactive, but later may become radioactive through interfaces with radioactive systems.

11.2.1.2.1 Quality Classification, Construction, and Testing Requirements

The quality group classification, and corresponding codes and standards that apply to the design of the LWMS are discussed in FSAR Section 3.2.

The non-safety related SSC Quality Control Program for the LWMS is described in the STP 3 & 4 Quality Assurance Program description in section 17.5S.

11.2.1.2.2 Seismic Design

The seismic category and corresponding codes and standards that apply to the design of the LWMS are discussed in FSAR Section 3.2.

11.2.1.2.3 Occupational Exposure

Design features to minimize occupational exposure include:

- Design of equipment for easier decontamination in order to reduce maintenance time
- Location of instruments requiring calibration in a central station outside of equipment cells
- Arrangement of shield wall penetrations to avoid direct exposure to normally occupied areas

- Piping design to minimize crud traps and plateout (there are no socket welds in contaminated piping systems)
- Provision for remote pipe and equipment flushing
- Utilization of remote viewing and handling equipment as appropriate
- A centralized sampling station to minimize exposure time
- Controlled tank vents

11.2.1.2.4 Minimization of Contamination and Radwaste Generation

The LWMS radwaste system, including mobile units as applicable, is designed to minimize contamination of the facility and environment, facilitate decommissioning, and minimize the generation of radioactive waste, in compliance with 10 CFR 20.1406. The following radwaste system design features meet 10 CFR 20.1406 requirements:

- Leakage is controlled and collected to reduce contamination of building floors and interconnecting systems (by use of curbing, floor sloping to local drains, floor-to-floor seals over expansion joints, wall-to-floor joint seals, sheathed hoses, drip pans or containment boxes, backflow preventers, siphon breakers, self-sealing quick disconnects, etc.).
- The Condensate Storage Tank, which is located outdoors (Figure 1.2-37 - Plot Plan), has liquid level monitoring with alarms in the control room. The tank overflows, drains and sample lines are routed to the LWMS. A dike is provided around the tank to prevent runoff in the event of a tank overflow. A drain within the dike is routed to the LWMS.
- The radwaste system design minimizes embedding contaminated piping in concrete, to the extent practicable.
- Provisions are included to clean contaminated materials (e.g., system components, equipment) and reuse resin beds when feasible.
- Mobile liquid radwaste treatment systems with interconnections to permanently installed radwaste system components include provisions that (i) avoid the contamination of nonradioactive systems, (ii) prevent uncontrolled and unmonitored releases of radioactive materials into the environment, and (iii) avoid connections with potable and sanitary water systems.
- Pressure testing of temporary and flexible lines, system piping embedded in concrete, and effluent discharge lines are performed in accordance with RG 1.143 guidance.
- Corrosion resistant properties of all system piping and valves associated with transfer lines to storage tanks and discharge piping in concrete are included. The LWMS also includes features designed for early detection of leaks and spills (e.g., leak detection sumps and wells).

11.2.1.2.4.1 Minimization of Contamination to Facilitate Decommissioning

Examples of the design features for operation that minimize contamination and facilitate decommissioning are as follows:

- Equipment design minimizes the buildup of radioactive material and facilitates flushing of crud traps.
- Equipment design contains provisions for draining, flushing, and decontamination of the equipment and associated piping.
- In order to minimize leakage and releases of radioactive gases, pressure retaining components of process systems utilize welded construction to the maximum practicable extent. Flanged joints or suitable rapid disconnect fittings are used where maintenance or operational requirements clearly indicate that such construction is preferable. Pitching of lines is applied where possible to minimize the potential for entrapment of radioactive material.
- Radwaste system connections including to the mobile system for the process of radioactive liquid waste (including slurries and sludges) utilize welded construction to the maximum practicable extent.
- All non-radioactive connections (e.g., makeup water for flushing, service air for sluicing process) to the radwaste system (including the mobile system) contain double isolation e.g., check valves and isolation valve to prevent cross contamination of the radioactive system. The radwaste mobile systems are not connected to the potable or sanitary water system.
- All radwaste system components, piping and valves are constructed of corrosion resistant material compatible with the process fluid.
- Penetrations through outer walls of the radwaste building are sealed to prevent miscellaneous leaks to the environment.
- Equipment vents, to the maximum extent possible, are piped directly to the radwaste building HVAC system to prevent airborne contamination of the radwaste building.
- Appropriately sloped floors and floor drains are provided in areas where potential for a spill exists to limit the extent of contamination.
- Provisions for epoxy-type or steel wall and floor coverings which provide smooth surfaces to minimize contamination and facilitate decontamination.
- Low conductivity and high conductivity sumps are stainless steel lined to reduce crud buildup and to facilitate decontamination.
- Radwaste tanks containing radioactive liquids are located in shielded compartments. The tank compartments are designed to contain leakage and the postulated failure of a tank or pipe rupture as described in Subsection 11.2.2.5.

- Curbs, drip pans or thresholds with floor drains routed to the radwaste system are provided for pumps and mobile treatment systems. Leakage is prevented from entering unmonitored and non-radioactive systems and ductwork in the area.

- System controls provide interlocks to prevent spillage from potential operator errors as well as equipment failure and provisions to collect leakage from LWMS. Therefore, no single operator error or equipment malfunction (single failure) results in an uncontrolled release of radioactive material to the environment.

- The LWMS provides one discharge line to the Main Coolant Reservoir (MCR) via the circulating water system. Administrative control and radiation monitoring equipment are placed on this line to measure the activity discharged, to assure no unintended release, and to assure that specified limits are not exceeded. A high radiation signal from this monitor will close the discharge valve.

11.2.1.2.4.2 Minimization of Radioactive Waste Generation

Examples of the design features to minimize the generation of radioactive waste include the following:

- The LWMS is divided into four subsystems (low conductivity waste (LCW) subsystem, high conductivity waste (HCW) subsystem, detergent waste subsystem, and chemical drain subsystem) which segregate the various types of liquid radwaste based on their composition and process requirements. The segregation is used to help provide the optimum water quality and radionuclide removal prior to recycle to the condensate storage tank or plant discharge. The segregation of the LWMS allows optimization of the LWMS treatment process and minimizes the generation of sludge and spent resin from the LWMS treatment. The sludge and spent resin generated from the radioactive material removed from the LWMS are transferred to the solid waste system for disposal.

- The LWMS is designed with margin so that liquid waste should not be discharged except as needed to maintain the plant water balance. The radwaste system is designed to maximize the recycling of water within the plant, which minimizes the releases of liquid to the environment. Maximizing recycling serves to minimize the potential for exposure of personnel in unrestricted areas from the liquid release pathway.

- Regeneration of the condensate demineralizers is not performed. Resin regeneration, produces a large volume of waste, every three to five days. The resin is replaced when necessary. Also, the filtration of condensate through high efficiency filters upstream of the condensate demineralizers reduces the amount of insoluble solids which come into contact with the resin.

11.2.2 System Description

The LWMS collects, monitors, processes, stores, and disposes of potentially radioactive liquid waste collected throughout the plant.

The low and high conductivity drainage systems are described in Section 9.3.

Potentially radioactive liquid wastes are collected in tanks located in the radwaste building. System components are designed and arranged in shielded enclosures to minimize exposure to plant personnel during operation, inspection, and maintenance. Tanks, processing equipment, pumps, valves, and instruments that may contain radioactivity are located in controlled access areas.

The LWMS normally operates on a batch basis. In the event of liquid waste input surge, such as from refueling operations, including back to back refueling, the LWMS is operated on a continuous basis to support plant operation. Provisions for sampling at important process points are included. Protection against accidental discharge is provided by detection and alarm of abnormal conditions and by administrative controls.

The LWMS is divided into four subsystems, so that the liquid wastes from various sources can be segregated and processed separately, based on the most economical and efficient process for each specific type of impurity and chemical content. Cross-connections between subsystems provide additional flexibility in processing the wastes by alternate methods and provide redundancy if one subsystem is not operating.

The LWMS is designed to treat process liquids with radionuclide concentrations associated with the design basis fuel leakage and produce water suitable for recycling to the condensate storage tank. Operational and outage related water balance considerations occasionally may require the discharge of processed radioactive effluent from the sample tanks to the environment, in which case concentrations of radionuclides in the effluent will meet the requirements of 10 CFR 20. Radiation exposure to persons in unrestricted areas resulting from liquid waste discharged during normal operation and anticipated operational occurrences will be less than the values specified in 10 CFR 50, Appendix I. Liquid discharge to the MCR via the circulating water system can be initiated from only one sample tank at a time through a locked-closed valve that is under administrative control. The discharge sequence is initiated manually. No single error or failure will result in discharge to the MCR via the circulating water system. The LWMS provides one discharge line to the MCR via the circulating water system for the release of liquid. Radiation monitoring equipment is placed on this line to measure the activity discharged and to assure that specified limits are not exceeded. A high radiation signal from this monitor automatically closes the discharge valve. The discharge line is fed by either the hot shower drain (HSD) sample tank (a very low level radioactivity source) or one of the LCW or HCW sample tanks.

The LWMS consists of the following four process subsystems described in the following subsections.

11.2.2.1 Low Conductivity Subsystem

The LCW collector tanks receive low conductivity inputs from various sources within the plant. These waste inputs have a high chemical purity and are processed on a batch basis. The low conductivity drain subsystem consists of four LCW collector tanks and pumps, a mobile based processing system (typically consisting of a collection of filtration systems (carbon and membrane filters), reverse osmosis system, deep-bed ion exchanger systems, and the associated piping, instrumentation and electrical systems as required), and two sample tanks and sample pumps.

The LCW collected in the LCW collector tanks is sampled and the treatment process is selected based on the chemical and radiological removal requirements. Provisions for bypassing processing units such as the charcoal filters, the reverse osmosis units and the polishing demineralizer are provided. The LCW (primarily equipment drains) processing based on the expected high purity water quality may not always need to include the charcoal filter and reverse osmosis units. These units provide redundant processing components for the HCW subsystem.

The LCW collector tanks influent header is cross-connected to the HCW collector tanks influent header such that either system can collect low conductivity waste and/or high conductivity waste. Cross-connections with the high conductivity waste subsystem allow processing of LCW through the mobile system for high conductivity waste treatment. Cross-collection and processing are not expected to be used during normal operations but infrequent operation during an outage when large quantity of radioactive liquid waste may be generated for processing in the LWMS.

A strainer or filter is provided downstream of the last ion exchanger in series to collect any resin fines that may be present due to the failure of the internal screen in the ion exchanger vessel.

The LCW sample tanks collect the process effluent, so that a sample may be taken for chemical and radioactivity analysis before discharging or recycling. The discharge path depends on the water quality, dilution stream availability and plant water inventory. Off-standard quality effluent can be recycled to LCW collector tanks. If the treatment effluent meets water quality standards and if the water inventory permits it to be recycled, the processed LCW effluent can be recycled to the condensate storage tank.

Filters are backwashed periodically to maintain their performance. Backwash waste from the membrane filters and rejects from reverse osmosis units are discharged to a liquid waste (LW) backwash receiving tank. Spent deep-bed ion exchanger resin is normally discharged to the spent resin storage tank as slurry. Spent charcoal from the LWMS filter is normally packaged directly in a liner or high integrity container (HIC) or transferred to the spent resin tank.

11.2.2.2 High Conductivity Subsystem

The HCW collector tanks receive HCW inputs from various high conductivity drain sumps in the Reactor Building (RB), Turbine Building (TB), and Radwaste Building. The high conductivity drain collection tanks can also receive waste input from the chemical drain collection tank.

The high conductivity drain subsystem consists of three HCW collector tanks and pumps, a mobile based processing system, consisting of filtration systems (carbon and membrane filters), reverse osmosis system, deep-bed ion exchanger systems and the associated piping, instrumentation and electrical systems as required, and two sample tanks and sample pumps. The waste collected in the HCW collector tanks is processed on a batch basis.

Cross-connections with the LCW subsystem also allow for processing through that subsystem. The HCW collector tanks can be shared with the LCW subsystem to provide additional collection capacity.

A strainer or filter is provided downstream of the last ion exchanger in series to collect resin fines that may be present.

The HCW sample tanks collect the process effluent, so that a sample may be taken for chemical and radioactivity analysis before discharging or recycling. The discharge path depends on the water quality, dilution stream availability and plant water inventory. Off-standard quality effluent can be recycled to HCW collector tanks. If the treatment effluent meets water quality standards and if the water inventory permits it to be recycled, the processed HCW effluent can be recycled to the condensate storage tank.

Backwash waste from the membrane filters and rejects from reverse osmosis units are discharged to a LW backwash receiving tank. Spent deep-bed ion exchanger resin is discharged to one of the spent resin storage tanks in the radwaste building as slurry. Spent charcoal from the LWMS filter is normally packaged directly into a liner or transferred to the spent resin storage tank.

The capability exists to accept used condensate polishing resin in a spent resin storage tank. The used condensate polishing resin from the Condensate Purification System is transferred to the spent resin storage tank in the Radwaste Building prior to use in the deep-bed ion exchanger in the high conductivity waste subsystem.

11.2.2.3 Detergent Waste Subsystem

Wastewater containing detergent from the controlled laundry and personnel decontamination facilities and decontamination wastewater from throughout the plant is collected in the hot shower drain (HSD) receiver tank. The detergent drain subsystem consists of one HSD receiver tank and two pumps, two inline strainers and associated piping, instrumentation and electrical systems as required, and one sample tank and sample pumps. The detergent waste treatment includes suspended solid removal processing. The treated waste is collected in a sample tank. A sample is taken and if discharge standards are met, then the waste is discharged off-site. Off-

standard quality water can either be recycled for further processing to the HSD receiver tank or to a HCW collector tank in the receiving mode.

11.2.2.4 Chemical Drain Subsystem

The chemical waste collected in the chemical drain collection tank consists of laboratory wastes and decontamination solutions. After accumulating in the chemical drain collection tank, chemical drains are recirculated. A sample is then taken and if discharge standards are met, then the waste may be discharged off-site via the HSD receiving tank. Off-standard quality water is recycled for further processing to a HCW collector tank in the receiving mode. A cross-connection with the detergent drain subsystem is also provided.

11.2.2.5 Detailed System Component Description

The LWMS consists of permanently installed tanks, pumps, pipes, valves, and instruments, and mobile systems for waste processing. Mobile systems provide an operational flexibility and maintainability to support plant operation. The major components of the LWMS are described in the following subsections.

11.2.2.5.1 Pumps

The LWMS process pumps are constructed of materials in accordance with RG 1.143.

11.2.2.5.2 Tanks

Tanks are sized to accommodate the expected volumes of waste generated in the upstream systems that feed waste into the LWMS for processing. The tanks are constructed of stainless steel to provide a low corrosion rate during normal operation. They are provided with mixing eductors and/or air spargers. The capability exists to sample LWMS collection and sample tanks. All permanently installed LWMS tanks are vented into the plant vent. The LWMS tanks are designed in accordance with the equipment codes listed in Table 11.2-1.

Atmospheric liquid radwaste tanks are provided with an overflow connection at least the size of the largest inlet connection. The overflow is connected below the tank vent and above the high-level alarm instrument location. Each collection tank room is designed to contain the maximum liquid inventory in the event that the tank ruptures. Each collection tank compartment is designed to contain the maximum liquid inventory in the event that the tank ruptures. Each collection tank compartment is stainless steel-lined up to a height equivalent to the tank capacity in the room as described in Subsection 15.7.3.1.

11.2.2.5.3 LWMS Mobile Systems for LCW and HCW processing

The radwaste treatment systems include modular mobile system skids that are designed to be readily replaced during the life of the plant. The mobile system is a skid-mounted design configured for ease of installation and process reconfiguration. In-plant supply and return connections from permanently installed equipment to the mobile system are provided to ensure operational flexibility.

LWMS mobile systems consist of equipment modules, complete with subcomponents, piping and instrumentation and controls necessary to operate the subsystem. Components are in module(s) designed for ease of installation and replacement due to component failure and/or technology upgrade. The modules include the shielding required between the radiation sources of the modules and access and service areas in the Radwaste Building. The modules are permanently installed in the Radwaste Building.

The LWMS mobile systems are located in the Liquid Waste Treatment System bay area of the radwaste building to allow truck access and mobile system skid loading and unloading. Modular shield walls are provided to allow shield walls to be constructed, as necessary, to minimize exposure to personnel during operation and routine maintenance.

The LCW and HCW mobile systems are two separate mobile systems. The LCW and HCW mobile systems are utilized to process the waste collected in the LCW Collector Tanks and HCW Collector Tanks. Each mobile system can utilize a combination of a charcoal filtration unit for removing organics and a membrane filtration unit for removing suspended solids, a reverse osmosis system (RO) for removing ionic impurities, and deep-bed ion exchangers for filter demineralizers for polishing.

The low conductivity drain is processed through the membrane filtration system to remove suspended solids and then processed through the ion exchangers to remove soluble impurities. Fine mesh strainers with flushing connections are provided in the ion exchange vessel discharge and in the downstream piping to prevent resin fines from being carried over to the sampling tanks.

The HCW collector tank content can be processed through a charcoal filter to remove any organics and oils and large particulates that may be present. It is then processed through a membrane type filter for the removal of suspended solids. The filtrate is processed through RO units using membranes that are made of a semi-permeable material for the removal of any remaining solids and ionic impurities. When pressure is applied to the feed side of the membrane, the solution passes through the membrane (permeates) and the solids and other impermeable wastes are rejected. The rejected solids and ionic impurities are collected in the LW backwash receiving tank and the final permeate is polished by deep-bed ion exchangers or filter demineralizers to produce treated water with condensate water quality standards. Fine mesh strainers with flushing connections are provided in the ion exchange vessel discharge and in the downstream piping to prevent resin fines from being carried over to the sampling tanks.

Backwash operation for charcoal filters and membrane filters is performed when the differential pressure across the filter exceeds a preset limit. Membrane filters backwash waste is discharged to the LW backwash receiving tank. Spent organic removal media is packaged directly into a liner or to the spent resin storage tank when the differential pressure exceeds a preset limit or waste quality of the effluent from the unit exceeds a preset value. Exhausted ion exchange resins may be sluiced to the spent resin storage tank when some chosen effluent purity parameter (such as

conductivity) exceeds a preset limit or upon high differential pressure. Spent charcoal from the LWMS filter is normally packaged directly in a liner or HIC or transferred to the spent risen tank.

11.2.3 Estimated Releases

During liquid processing by the LWMS, radioactive contaminants are removed and the bulk of the liquid is purified and either returned to the condensate storage tank or discharged to the environment. The radioactivity removed from the liquid waste is concentrated on the filter media, ion exchange resins and in the reject water from the RO units. The decontamination factors (DFs) that are listed in Table 11.2-5 are in accordance with NUREG-0016 and are conservative values. The filter media, reverse osmosis rejects and ion exchange resins are sent to the Solid Waste Management System (SWMS) for further processing. If the liquid meets the purity requirements it is returned to the plant for condensate makeup. If the liquid is discharged, the activity concentration is consistent with the discharge criteria of 10 CFR 20 and dose commitment in 10 CFR 50, Appendix I.

The parameters and assumptions used to calculate releases of radioactive materials in liquid effluents and their bases are provided in Section 12.2.2.5. The LWMS design ensures that calculated individual doses from the release of radioactive liquid effluents during normal operation and anticipated operational occurrence is less than 0.03 mSv (3 mrem) to the whole body and 0.1 mSv (10 mrem) to any organ.

Expected releases of radioactive materials by radionuclides in liquid effluents resulting from normal operation, including anticipated operational occurrences, and from design basis fuel leakage are provided in Section 12.2.2.5.

An assessment of potential radiological liquid releases following a postulated failure of a LWMS tank and its components in accordance with SRP 15.7.3 is provided in Subsection 15.7.3.

A tabulation of the releases by radionuclides can be found in Table 12.2-22, Section 12.2.2.5. The tabulation is for the total system and for each subsystem and includes indication of the effluent concentrations. The calculated concentrations in the effluents are within the concentration limits of 10 CFR 20; the doses resulting from the effluents are within the numerical design objectives of Appendix I to 10 CFR 50 and the dose limits of 10 CFR 20 as set forth in Section 12.2.2.4.

11.2.3.1 Release Points

The release points for liquid discharge to the environment are the discharge of the effluent from the LCW sample tanks or HCW sample tanks or the hot shower drain sample tank as indicated on the process diagram (Figure 11.2-1) and the P&ID (Figure 11.2-2, Sheet 12).

11.2.3.2 Dilution Factors

Refer to Table 12.2-23 for dilution factors used in evaluating the release of liquid effluents.

11.2.4 Tank Resistance to Vacuum Collapse

LWMS is designed to operate at atmospheric and greater than atmospheric pressures. Tanks are vented to the atmosphere via the heating, ventilation and air conditioning (HVAC) System. No condensing vapors are housed that could create a vacuum. Therefore, no adverse vacuum conditions are expected.

11.2.5 COL License Information

11.2.5.1 Plant-Specific Liquid Radwaste Information

The following site-specific supplement addresses COL License Information Item 11.1.

(1) STP 3 & 4 complies with Appendix I to 10 CFR 50 and the guidelines given in ANSI Std. N13.1, "Guide to Sampling Airborne Radioactive Materials in Nuclear Facilities" (Reference 11.2-3), Regulatory Guide (RG) 1.21, "Measuring and Reporting Radioactivity in Solid Wastes and Releases of Radioactive Materials in Liquid and Gaseous Effluents from Light-Water-Cooled Nuclear Power Plants," and RG 4.15, Revision 1, "Quality Assurance for Radiological Monitoring Programs (Normal Operation)—Effluent Streams and the Environment," as described in Section 12.2.2.4 with the QA aspects described in Subsection 11.5.7S.

(2) A radiation monitor in the discharge line automatically terminates liquid waste discharges from the sample tanks in the LCW, HCW or detergent waste subsystem if radiation measurements exceed a predetermined level set to meet 10 CFR 20, Sections 1001 - 2402, Appendix B, Table 2, Column 2 for the applicable subsystem is provided as described in Section 11.5.

(3) The Offsite Dose Calculation Manual (ODCM) provides specific administrative controls and liquid effluent source terms to limit the liquid wastes to 3700 MBq/yr (excluding tritium). This will be implemented per the schedule in Table 13.4S-1.

(4) The Process and Effluent Monitoring and Sampling Program has specific procedures to comply with 10 CFR 50 (Appendix I) Sections II and III.

(5) The ODCM has administrative controls to limit the instantaneous discharge concentrations of the radionuclides in liquid effluents to an unrestricted area to within 10 times the limits in 10 CFR 20, Appendix B, Table 2, Column 2.

(6) The non-safety related SSC Quality Control Program for the LWMS is described in the STP 3 & 4 Quality Assurance Program description in section 17.5S.

11.2.6 Testing and Inspection Requirements

The LWMS is tested during the preoperational test program as discussed in Section 14.2.12.1.75. In addition to hydrostatic testing of the LWMS, the pumps and mobile systems are performance tested to demonstrate conformance with design flows and process capabilities. An integrity test is performed on the system upon completion.

Provisions are made for periodic inspection of major components to ensure capability and integrity of the systems. Display devices are provided to indicate parameters (such as tank levels and process radiation levels) required in routine testing and inspection.

11.2.7 Instrumentation Requirements

The LWMS is operated and monitored from the Radwaste Building Control Room (RWBCR). Major system parameters, i.e., tank levels, process flow rates, filter and ion exchanger differential pressure, ion exchanger effluent conductivity, etc., are indicated and alarmed to provide operational information and performance assessment. A continuous radiation detector, as described in Section 11.5, is provided to monitor the discharge of radioactivity to the environment. Priority system alarms (such as tank levels and process radiation levels) are repeated in the main control room.

Requirements for sampling are set forth in Subsection 9.3.2.

11.2.8 References

11.2-1 EPRI Technical Report 1013503, Program on Technology Innovation: Technical Support for GE Economic Simplified Boiling Water Reactor (ESBWR)-Radwaste System Design, Final Report, November 2006.

11.2-2 ANSI 55.6 –July 16, 1993, American National Standard for Liquid Radioactive Waste Processing System for Light Water Reactor Plants.

11.2-3 ANSI Std. N13.1, Guide to Sampling Airborne Radioactive Materials in Nuclear Facilities.

Table 11.2-1 Equipment Codes for Radwaste Equipment (from Table 1, RG 1.143, Rev. 2)

Component	Design and Construction	Materials[1]	Welding	Inspection and Testing
Pressure Vessels and Tanks (>15 psig)	ASME Code Section VIII, Div. 1 or Div. 2	ASME Code Section II	ASME Code Section IX	ASME Code Section VIII, Div. 1 or Div.2
Atmospheric Tanks	API 650	ASME Code Section II	ASME Code Section IX	API 650
0-15 psig Tanks	API 620	ASME Code Section II	ASME Code Section IX	API 620
Heat Exchangers	TEMA STD, 8th Edition ; ASME Code BPVC Section VIII, Div. 1 or Div. 2	ASTM B359-98 or ASME Code Section II	ASME Code Section IX	ASME Code Section VIII, Div. 1 or Div. 2
Piping and Valves	ANSI/ASME B31.3[4,5]	ASME Code Section II[6]	ASME Code Section IX	ANSI/ASME B31.3
Pumps	API 610; API 674; API 675; ASME Section VIII, Div.1 or Div.2	ASTM A571-84 (1997) or ASME Code Section II	ASME Code Section IX	ASME Code[2] Section III, Class 3
Flexible Hoses and Hose Connections for MRWP[3]	ANSI/ANS-40.37	ANSI/ANS-40.37	ANSI/ANS-40.37	ANSI/ANS-40.37

1. Manufacturer's material certificates of compliance with material specifications may be provided in lieu of certified material test reports as discussed in Regulatory Position 1.1.2 of Regulatory Guide 1.143.
2. ASME Code stamp, material traceability, and the quality assurance criteria of ASME BPVC, Section III, Div.1, Article NCA are not required. Hence, these components are not classified as ASME Code Section III, Class 3.
3. Flexible hoses are used in conjunction with Mobile Radwaste Processing Systems (MRWP).
4. Class RW-IIa and RW-IIb Piping Systems are to be designed as category “M” systems.
5. Classes RW-IIa, RW-IIb and RW-IIc are discussed in Regulatory Position 5 of Regulatory Guide 1.143.
6. ASME BPVC Section II required for Pressure Retaining Components.

Table 11.2-2 Capability of the LWMS to Process Expected Wastes

System	Design Accident Volume Primary Loop Leakage (m^3) (1 day only)[a][e]	Refueling / Plant Startup Max Influent (m^3) (1 day only) [a][e]	Normal Influent per day[a] (m^3)	Process Rate[b] (m^3/hr)	Max Process Capacity (m^3/yr)[c][d] (1 day only)	Normal Process Capacity (4hrs/day, 5days/wk) (m^3/yr) [c][d]	Maximum Fraction of Capacity Utilized	Normal Fraction of Capacity Utilized	Storage Holdup Tank Designation	Capacity (m^3)[f]	Tank Holdup for Max Influent (days)[g]	Tank Holdup for Normal Influent (days)[g]	Redundant Process System
LCW	215	615	55	34	652.8	2.83E+04	0.94	0.71	LCW Collector Tanks (4)	560	0.91	10.18	HCW
									LCW Sample Tanks (2)	280	0.46	5.09	
HCW	65	65	15	34	652.8	2.83E+04	0.10	0.19	HCW Collector Tanks (3)	420	6.46	28.00	LCW
									HCW Sample Tanks (2)	280	4.31	18.67	
HSD	N/A	12	4	34	652.8	2.83E+04	0.02	0.05	HSD Receiver Tank	30	2.50	7.50	HCW
									HSD Sample Tank	30	2.50	7.50	
CHEM DRAIN	N/A	2	2	4	192.0	8.32E+03	0.01	0.09	Chem. Drain Collection Tank	4	2.00	2.00	HCW, HSD

Notes:

(a) ABWR DCD Table 11.2-2.

(b) Process Rate - see Process Flow Diagram, Figure 11.2-1 Radwaste system PFD Sheets 1 of 2 and 2 of 2 .

(c) HCW and LCW mobile units include filters, reverse osmosis ion exchangers with assumed process availability of 0.8. HSD is processed through a strainer with assumed process availability of 0.8.

(d) The process capacity = process rate (gpm) x availability factor x process time.

(e) Refueling/Plant Startup is used as bounding values

(f) Tank designations and storage holdup capacities are taken from Table 11.2-4

(g) Tank Holdup (days) = tank capacity / influent per day.

Table 11.2-3 Not Used

This table has been deleted. The design basis source terms appropriate for the radwaste building are presented in Section 12.2. For example LCW collector tank source terms are presented in Table 12.2-13a.

Table 11.2-4 Capacities of Tanks, Pumps, and Other Components

Component	Quantity	Standards	Type	Nominal Capacity per tank (m3)	Design Pressure (kg/cm2)	Design Temp (ºC)	Normal Operating Pressure (kg/cm2)	Normal Operating Temp (ºC)	Material
Tanks									
HCW Collector Tank	3	API-650/ API-620	Cylindrical, Vertical	140	atm	80	atm	66	SS
HCW Sample Tank	2	API-650/ API-620	Cylindrical, Vertical	140	atm	80	atm	66	SS
LCW Collector Tank	4	API-650/ API-620	Cylindrical, Vertical	140	atm	80	atm	66	SS
LCW Sample Tank	2	API-650/ API-620	Cylindrical, Vertical	140	atm	80	atm	66	SS
HSD Receiver Tank	1	API-650/ API-620	Cylindrical, Vertical	30	atm	80	atm	66	SS
HSD Sample Tank	1	API-650/ API-620	Cylindrical, Vertical	30	atm	80	atm	66	SS
Chemical Drain Collector Tank	1	API-650/ API-620	Cylindrical, Vertical	4	atm	80	atm	66	SS

Table 11.2-4 Capacities of Tanks, Pumps, and Other Components (Continued)

Component	Quantity	Standards	Type	Nominal Capacity per pump (m^3/hr)	Design Pressure (kg/cm2)	Design Temp (ºC)	Normal Operating Pressure (kg/cm2)	Normal Operating Temp (ºC)	Material
Pumps									
HCW Collector Pump	3	API-610; API-674; API-675; ASME Code Section VIII, Div. 1 or Div. 2	Centrifugal/ Mechanical Seal	68	15	80	10	66	SS
HCW Sample Pump	2	API-610; API-674; API-675; ASME Code Section VIII, Div. 1 or Div. 2	Centrifugal/ Mechanical Seal	150	15	80	10	66	SS
LCW Collector Pump	4	API-610; API-674; API-675; ASME Code Section VIII, Div. 1 or Div. 2	Centrifugal/ Mechanical Seal	68	15	80	10	66	SS
LCW Sample Pump	2	API-610; API-674; API-675; ASME Code Section VIII, Div. 1 or Div. 2	Centrifugal/ Mechanical Seal	150	15	80	10	66	SS
HSD Receiver Pump	2	API-610; API-674; API-675; ASME Code Section VIII, Div. 1 or Div. 2	Centrifugal/ Mechanical Seal	68	15	80	10	66	SS
HSD Sample Pump	2	API-610; API-674; API-675; ASME Code Section VIII, Div. 1 or Div. 2	Centrifugal/ Mechanical Seal	80	15	80	10	66	SS
Chemical Drain Collector Pump	2	API-610; API-674; API-675; ASME Code Section VIII, Div. 1 or Div. 2	Centrifugal/ Mechanical Seal	10	15	80	10	66	SS

Table 11.2-4 Capacities of Tanks, Pumps, and Other Components (Continued)

Component	Quantity	Standards	Type	Nominal Capacity per unit (m^3/hr)	Design Pressure (kg/cm2)	Design Temp (ºC)	Normal Operating Pressure (kg/cm2)	Normal Operating Temp (ºC)	Material
LWMS Mobile System for LCW Processing									
LCW Filter	1	API-620, ASME Code BPVC Div. 1 or Div 2[b]	Charcoal Filter	34	15	80	10	66	SS[c]
LCW Filter	1	API-620, ASME Code BPVC Div. 1 or Div 2[b]	Membrane Filter	34	15	80	10	66	SS[c]
LCW Reverse Osmosis Unit	1	API-620, ASME Code BPVC Div. 1 or Div 2[b]	2 Pass Reverse Osmosis Unit	34	variable	80	variable	66	SS[c]
LCW Demineralizer	2	API-620, ASME Code BPVC Div. 1 or Div 2[b]	Mixed Bed Type	34	15	80	10	66	SS[c]
LWMS Mobile System for HCW Processing									
HCW Filter	1	API-620, ASME Code BPVC Div. 1 or Div 2[b]	Charcoal Filter	34	15	80	10	66	SS[c]
HCW Filter	1	API-620, ASME Code BPVC Div. 1 or Div 2[b]	Membrane Filter	34	15	80	10	66	SS[a]
HCW Reverse Osmosis Unit	1	API-620, ASME Code BPVC Div. 1 or Div 2[b]	2 Pass Reverse Osmosis Unit	34	variable	80	variable	66	SS[c]
HCW Demineralizer	2	API-620, ASME Code BPVC Div. 1 or Div 2[b]	Mixed Bed Type	34	15	80	10	66	SS[c]
Strainers									
HSD Strainer	2	ANSI/ASME B31.1 (same as piping)	Inline Strainers	34	15	80	10	66	SS

Notes:
(a) Nominal capacity refers to the batch capacity
(b) For vessel design
(c) Vessel material
(d) When processing through the LWMS Mobile Units and HSD strainers, the remainder of the flow is recycled to the subsystem collector tank.

Table 11.2-5 Decontamination Factors*

Subsystems*	Filter	Reverse Osmosis	Ion-Exchanger	Total DF
Equipment (low conductivity)				
Drain Subsystem:				
Halogens	1	10*	100 (10)**	10,000
Cs, Rb	1	10*	10 (10)**	1,000
Other nuclides	1	10*	100 (10)**	10,000
Floor (high conductivity)				
Drain Subsystem:				
Halogens	1	10*	100(10)**	10,000
Cs, Rb	1	10*	2 (10)**	200
Other nuclides	1	10*	100 (10)**	10,000
A DF of 1 is used for tritium.				
Chemical Drain Subsystem:				
Chemical drain is processed in high conductivity drain subsystem.				
Detergent Drain Subsystem:				
A DF of 1 is used for the detergent drain strainer for all radionuclides.				

* Radwaste processing equipment is designed to meet or exceed these decontamination factors.

** From ANSI 55.6 –1993, July 16, 1993, American National Standard for Liquid Radioactive Waste Processing System for Light Water Reactor Plants, (Reference 11.2-4), Table 8, Decontamination Factors. For two ion exchangers in series, the DF for the second unit is given in parentheses.

Table 11.2-6 Probable Inputs to Liquid Radwaste from Operational Occurrences

Waste Generation Source	Batch Volume (m^3)	Normal Frequency	Maximum Frequency	Normal Volume (m^3/d)	Design Accident Volume Primary Loop Leakage (m^3)	Volume in m^3 on Maximum Day Plant Startup	Refueling Water Cleanup
Low Conductivity Wastes							
DW Equipment Drain	-	-	-	10	110	10	10
R/B Equipment Drain	-	-	-	15	15	15	15
T/B Equipment Drain	-	-	-	15	15	15	15
RW/B Equipment Drain	-	-	-	5	5	5	5
Upper Pool Drain	-	-	-	-	-	-	500
CUW Backwash Receiving Tank	35	1/20	1	-	35	35	35
CF Backwash Receiving Tank	35	3/34	3	-	35	35	35
Others	-	-	-	10	-	20	-
Total	-	-	-	55	215	135	615
High-Conductivity Wastes							
Floor Drain							
R/B Floor Drain	-	-	-	5	55	5	5
T/B Floor Drain	-	-	-	5	5	5	5
RW/B Floor Drain	-	-	-	3	3	3	3
Equipment Displacement	-	-	-	-	-	-	50
Subtotal	-	-	-	13	63	13	63
Chemical Drain Wastes							
Hot Laboratory Chemical Drain	-	-	-	2	2	2	2
Total	-	-	-	15	65	15	65
Detergent Wastes							
Hot Shower Drain	-	-	-	3	-	8	-
Laundry Drain	-	-	-	1	-	4	-
Total	-	-	-	4	-	12	-

The following figures are revised due to STD DEP 11.2-1 and are located in Section 21:

Figure 11.2-1 Radwaste System (Sheet 1 and 2 of 2)

Figure 11.2-2 Radwaste system (Sheets 1 through 36 of 36)

11.3 Gaseous Waste Management System

The information in this section of the reference ABWR DCD, including all subsections, tables, and figures, is incorporated by reference with the following departures and supplements.

STD DEP 10.4-3

STD DEP 10.4-5 (Table 11.3-3, Figure 11.3-1, 11.3-2)

STD DEP 11.3-1 (Table 11.3-2 through 11.3-4 and Figure 11.3-1 and Figure 11.3-2)

11.3.2.1 Offgas System Compliance With Part 20.1406

The Offgas System meets the requirements of 10 CFR 20.1406. The Offgas System design will minimize, to the extent practicable, contamination of the facility and the environment by removing the radioactive isotopes of noble gases and gaseous iodines drawn from the condenser and allowing them to decay to acceptable levels before the offgas stream discharges the decayed radionuclides to the environment via the plant stack. The Offgas System includes discharge monitoring that will automatically isolate the Offgas System from the environment in the unlikely event an unacceptable level of activity is detected in the Offgas System effluent. The Offgas System will be operated using approved plant procedures.

The Offgas System is designed to minimize the generation of radioactive waste in that the charcoal in the carbon beds is not intended to be replaced during the entire plant life. To minimize carbon usage and to greatly reduce the potential for the Offgas System to spread contamination, the radiolysis-generated hydrogen and oxygen removed from the condenser by the Offgas System is recombined in a controlled manner in piping designed to withstand hydrogen and oxygen detonation. The resulting offgas is cooled and partially condensed to reduce the total influent mass and increase the relative radionuclide concentration that the carbon delay beds process. This increases the efficiency of the carbon delay beds and, therefore, reduces the mass of charcoal adsorbent. In addition, the cooler gas and resultant overall lower gas flow rate produces conditions for radionuclides to be more efficiently retained on the carbon in the delay beds. Additionally, a guard bed is positioned at the front end of the series of charcoal delay beds and is designed to bear the brunt of potential offgas operating events so that the follow on beds are minimally affected during the event

The initial loading of carbon is designed to adsorb the radionuclide gases present in the offgas stream without requiring periodic replacement. This design provides an objective that, during the operating life of the plant, carbon in the Offgas System delay beds should not contribute to or be processed into solid radwaste. The design objective can provide, at the end of the plant life, Offgas System decommissioning that primarily entails the removal of carbon adsorbent from the delay beds and processing it as dry solid radwaste.

11.3.3 Process Description

STD DEP 11.3-1

11.3.3.1 Process Functions

STD DEP 10.4-5

Major process functions of the Offgas System include the following:

(1) Dilution of air ejector offgas with steam to less than 4% hydrogen by volume

(2) Recombination of radiolytic hydrogen and oxygen into water to reduce the gas volume to be treated and the explosion potential in downstream process components

*(3) Two-stage condensation of bulk water vapor first using ~~condensate~~*Turbine Building Cooling Water (TCW) *and then chilled water as the coolant reducing the gaseous waste stream temperature to ~~18~~*10°*C or less*

*(4) Dynamic adsorption of krypton and xenon isotopes on charcoal at about ~~38~~*25°*C*

(5) Filtration of offgas

(6) Monitoring of offgas radioactivity levels and hydrogen gas concentration

(7) Release of processed offgas to the atmosphere

(8) Discharge of liquids to the main condenser and radwaste systems

Major process functions of the ventilation systems are described in Section 9.4.

11.3.3.2 Process Equipment

Major process equipment of the Offgas System consists of the following:

*(1) Process piping starting from the final steam dilution jets (SJAE) of the ~~main condenser evacuation system~~*Main Condenser Evacuation System (not a part of the Offgas System)

*(2) ~~Integral recombiners,~~*Recombiner trains which include *~~including~~a Preheater ~~section~~, a Recombiner ~~section~~, and a Condenser ~~section~~*per train

(3) Cooler-condensers

(4) Activated charcoal adsorbers

(5) High efficiency particulate air (HEPA) filter

(6) Monitoring instrumentation

(7) Process instrumentation and controls

(8) Offgas Evacuation System

Major process equipment of the ventilation systems are described in Section 9.4.

11.3.3.3 Process Facility

STD DEP 10.4-5

STD DEP 11.3-1

*~~Reactor condensate~~*Turbine Building Cooling Water (TCW) *is used as the coolant for the offgas condensers. In this capacity:*

*(1) The temperature of ~~condensate~~*coolant *supplied to the offgas condenser should not exceed 56.6°C during periods of normal operation nor 43°C during periods of startup (main condenser evacuation) operation.*

*(2) The pressure of ~~condensate~~*coolant *supplied to the offgas condenser should not exceed the design pressure of the condenser.*

*(3) ~~Reactor condensate~~*TCW *isolation valves should be normally open to both recombiner condensers.*

~~If any of these conditions cannot be met with reactor condensate, the coolant should be supplied by a closed cooling water system of reliability and quality equal to that of reactor condensate.~~

*The gaseous waste stream is then cooled to ~~18~~*10 *°C or less in the cooler condenser. Chilled water (7 °C) is used from the HNCW System (Subsection 9.2.12). The cooler condenser is located immediately above the offgas condenser and is designed to remove any condensed moisture from the gaseous waste stream. The condensed moisture drains into the offgas condenser where it is sent to the main condenser.*

*The gaseous waste stream is heated to approximately ~~38~~*25 *°C by ambient heating in the charcoal vault.*

11.3.4.2 Process Design

STD DEP 11.3-1

Primary design requirements and the process data for startup and normal operating conditions are shown on the process flow diagram (PFD) (Figure 11.3-1) and the piping and instrument diagram (P&ID) (Figure 11.3-2). The Offgas System instrument setpoints are given in Table 11.3-4.

*A flow meter is provided to measure the dilution steam flow to the last-stage air ejectors. If the dilution steam flow falls below a specified value, the process offgas line suction valve between the main condenser and SJAE closes automatically. The event is alarmed in the main control ~~room.~~*room. This flow meter is shown on Figure 10.4.1.

The SJAE provides superheated steam at the inlet to the preheaters. The driving steam (dilution steam) to the SJAEs is nuclear steam or steam of nuclear quality. Nuclear quality steam is defined as steam having impurities in concentrations not exceeding that of nuclear steam.

*~~Recombiner preheaters~~*Preheaters *preheat gases to about ~~177~~*150 *°C for efficient catalytic recombiner operation and to ensure the absence of liquid water, which suppresses the activity of the recombiner catalyst. Maximum preheater temperature does not exceed ~~210~~*170*°C should gas flow be reduced or stopped. This is accomplished by using a maximum steam pressure of ~~1.72~~*0.96 *MPa, saturated. At startup, steam at this pressure is available before the process offgas is routed through the preheater to the recombiner catalyst. Electrical preheaters directly exposed to the offgas are not allowed. Each preheater connects to an independent final stage air ejector to permit separate steam heating of both recombiners during startup or drying one recombiner while the other is in operation. Preheater steam flow quantities are shown on the PFD. Preheater steam is ~~nuclear steam~~*nuclear quality steam for *reliability. The preheater is sized to handle a dilution steam load of 115% of that shown on the PFD in addition to allowing for 5% plugged tubes.*

11.3.4.2.3 Condensing

*The offgas condensers cool the recombiner effluent gas to a maximum temperature of 68 °C for normal operation and 57 °C for startup operation. The condenser includes baffles to reduce moisture entrainment in the offgas. The unit is sized to handle a dilution steam load of 115% of that shown on the PFD, in addition to allowing for 5% plugged tubes. The drain is capable of draining the ~~entire process~~*collected *condensate, including the 15% excess plus 9 m^3 /h, from the unit at both startup and normal operating conditions, taking into account the possibility of condensate flashing in the return line to the main condenser. The drain also incorporates a flow element so that higher flows due to tube leakage can be easily identified. The drain is a passive loop seal with a block valve operable from the main control room.*

*The gaseous waste stream is then cooled to ~~18~~*10 *°C or less in the cooler condenser. The cooler condenser is designed to remove any condensed moisture by draining it to the offgas condenser.*

11.3.4.2.4 Adsorption

*The activated charcoal uses "arbitrary" adsorption coefficient Karb values for krypton and xenon at 25 °C of at least 60 and 1170 cm^3 /g, respectively (cm^3 defined at ~~0~~*25*°C, ~~and~~1.0 atmosphere* and 0% humidity). *Separate Karb laboratory determinations of krypton and xenon are made for each manufacturer's lot unless the manufacturer can supply proof convincing to the purchaser that other lots of the same production run immediately adjacent to the lot ~~rested~~*tested *are equivalent to the lot tested with respect to krypton and xenon adsorption. Other adsorption tests (e.g., dynamic coefficients) may be acceptable, provided their equivalence to Karb tests for this purpose can be demonstrated. Charcoal particle size is 8-16 mesh (USS) with less than 0.5% under 20 mesh. Moisture content is less than 2% by weight. Ignition temperature will be above*

150 °C in air. Properties of activated charcoal used in the adsorber vessels are an optimization of the following:

11.3.4.2.5 Filtration

The filter assembly contains a single high efficiency water-resistant filter element capable of removing at least 99.97% of 0.3 micrometer particles, as tested at the factory with mono-dispersed dioctylphthalate (DOP) smoke. The initial flow resistance of the filter does not exceed 2.54 cm water gauge (WG) at a water saturated air flow of ~~425~~96.4 m^3 /h. An upstream demister pad is not required in the filter assembly. The filter is capable of operating under 100% relative humidity conditions.

11.3.4.2.8 Charcoal Vault Temperature

The charcoal adsorber vault air conditioning system is controlled at any selected temperature within a range of ~~29~~23 °C to ~~41~~31 °C. The temperature of the vault is maintained as indicated in Subsection 11.3.4.3.13.

STP DEP 10.4-3

11.3.4.2.9 Rangeability

STP DEP 10.4-3

STP DEP 11.3-1

~~*In addition, the process can mechanically accommodate a startup high air flow as shown on the Process Data Sheet upon initiation of the steam jet air ejectors. This startup air flow results from evacuation of the turbine condensing equipment while the reactor is in the range of about 3 to 7% of rated power.*~~

The process can accommodate reactor operation from 0 to 100% of full power (full power is defined as the Normal Operating Case shown on the PFD). In normal operation, radiolytic gas production varies linearly with thermal power. The process can accommodate an air flow at 10 to ~~425~~96.4 m^3 /h for the full range of reactor power operation.

11.3.4.3 Mechanical Design

STD DEP 11.3-1

11.3.4.3.3 Equipment Room Ventilation Control

The equipment rooms are under positive ventilation control. Environmental conditions are maintained within the following ranges:

Area	Pressure (static cm water gauge)	Temp (°C)	Relative Humidity (%)	Air Turnover Rate (room air changes)
Offgas Bldg. Area, except Equipment Cells	*0.0 to - 0.63*	*4.4 Min* *21 normal* *40 Max*	*20 Min* *40 normal* *90 Max*	*3/h*
Charcoal Vault	*- 0.63 to -1.26*	~~*4.4*~~23 Min ~~*35*~~25 normal ~~*65.6*~~*31 Max*	*20 Min* *40 normal* *70 Max*	*3/h*
Other offgas Equipment Cells	*- 0.63 to -1.26*	*4.4 Min* *21 normal* *48.9 Max*	*20 Min* *40 normal* *90 Max*	*3/h*

11.3.4.3.7 Valves

(2) A valve having a double stem seal and lantern ring type bonnet, with Grafoil or equivalent packing with the lantern ring leakoff connection pressurized with nitrogen or air ~~*form*~~from *an oil-free compressor to a pressure exceeding the normal system operating pressure. The pressurization line includes a flow indicating device mounted on the valve (such as a purge gas rotameter Schutte and Koerting Type 1875-V or equivalent) with a scale in the 0.5 to 1.0 cm^3/s (at standard atmosphere) range, direct reading.*

11.3.4.3.11 Recombiners

~~*The recombiners are mounted with the gas inlet at the bottom.*~~ *The inlet piping* for the recombiner *has sufficient drains, traps and moisture separators to prevent liquid water from entering the recombiner vessel during startup. The recombiners are catalytic type with a nondusting catalyst supported on metallic screens or ribbons. The catalyst is replaceable without requiring replacement of the external pressure vessel.*

11.3.4.3.13 Charcoal Adsorber Vault

The temperature within the charcoal adsorber vault is maintained and controlled by appropriate connection(s) to the Turbine Building HVAC System. The flow rate and temperature of the air supplied to the vault has the capacity to cool the vault and equipment within from 66 °C to 27 °C in 48 hours. The decay heat is sufficiently small that, even in the no-flow condition, there is no significant loss of adsorbed noble gases due to temperature rise in the adsorbers. The HVAC design is capable of controlling the vault temperature within ~~*3°C over*~~*the range of* ~~*27 to 38*~~ 23 to 31°C.

The charcoal adsorber vault temperature is controlled in the range ~~*27*~~23*°C to* ~~*38*~~31*°C. If it becomes necessary to heat a vessel or the vault to 66 °C to facilitate drying the charcoal, portable heaters can be used. A smoke detector is installed in the exhaust ventilation duct from the charcoal adsorber vault to detect and provide alarm to the operator, as a charcoal fire within the vessel(s) usually results in the burning of the exterior painted surface.*

11.3.5 Other Radioactive Gas Sources

The following information supplements the existing information in this subsection of the reference ABWR DCD.

The main condenser mechanical vacuum pumps which ~~is~~are part of the main condenser evacuation system ~~is~~are described in section 10.4.

11.3.11 COL License Information

11.3.11.1 Compliance with Appendix I to 10 CFR50

The following supplemental information is provided for COL License Information Item 11.2.

~~*Compliance with Appendix I to 10 CFR50 numerical guidelines for offsite radiation doses as a result of gaseous or airborne radioactive effluents during normal plant operations, including anticipated operational occurrences is provided in the cost benefit analysis performed in accordance with the NEI topical report for numerical design objectives for 10 CFR50 App I. In accordance with 10 CFR 50.71(e), the FSAR will updated with reference to NEI Topical Report when the information is available.*~~

Compliance with numerical guidelines in Appendix I to 10 CFR 50 for offsite radiation doses as a result of gaseous effluents during normal plant operations, including anticipated operational occurrences, is provided in Subsection 12.2.2.2. To demonstrate compliance with Section II, paragraph D of Appendix I, a cost-benefit analysis was performed in accordance with the guidance of Regulatory Guide 1.110. The analysis postulated the addition of one augment of reasonably demonstrated technology to the Gaseous Waste Management System (GWMS). This augment was:

- *the addition of one 3-ton charcoal adsorber to the GWMS.*

Regulatory Guide 1.110 cost data used to evaluate the augment to the GWMS are summarized in the Table 11.3-5.

The total annual costs associated with implementing the augment to the GWMS and the corresponding benefit-cost ratio are determined using the methodology prescribed in Regulatory Guide 1.110, the cost data provided in Table 11.3-5, and the collective 50 mile total body dose (due to gaseous releases) that is presented in Table 5.4-9 of the STP 3 & 4 Environmental Report. The collective 50 mile total body dose is conservatively considered to be the total dose saved as a result of implementing this augment to the GWMS. The total annual costs of the augment to the GWMS and the associated benefit cost ratio are in Table 11.3-6. These results demonstrate that the total annual cost associated with the augment to the GWMS is substantially larger than the benefit derived from the augment. The cost-benefit numerical analysis, required by 10 CFR 50 Appendix I Section II Paragraph D, demonstrates that the addition of items to the GWMS of reasonably demonstrated technology will not provide a favorable cost benefit. Therefore, the STP 3 & 4 prescribed GWMS meets the numerical guides for dose design objectives.

Table 11.3-2 Offgas System Major Equipment Items

~~Recombiner (Item D005, 2 required, contains preheater, catalyst, and condenser sections)~~
- ~~Carbon steel shell~~
- ~~Shell length: approximately 70m~~
- ~~Shell OD: approximately 1.3m~~
- ~~Total unit height: approximately 2.95m~~
- ~~Design pressure: 2.41 MPa~~
- ~~Design temperature: 232 °C~~
- ~~Code of construction: ASME Section VIII, Division 1~~
- ~~Preheater section~~
  - ~~Shell and tube heat exchanger~~
  - ~~Tubes: stainless steel, rolled into stainless steel tube sheet~~
  - ~~Tube-side design pressure: 2.41 MPa~~
  - ~~Design temperature: 232 °C~~
- ~~Catalyst section~~
  - ~~Catalyst support: stainless steel~~
  - ~~Design temperature: 482 °C~~
  - ~~Catalyst: precious metal on ceramic or metal base~~
- ~~Offgas condenser section~~
  - ~~Shell and tube heat exchanger~~
  - ~~Tubes: stainless steel, rolled into stainless steel tube sheet~~
  - ~~Tube-side design pressure: 2.41 MPa~~
  - ~~Design temperature: 482 °C~~

~~Cooler condenser (Item B010, 2 required)~~
- ~~Type: Shell and tube heat exchanger carbon steel vessel~~
- ~~Shell length: 3.05m~~
- ~~Shell-side design pressure: 2.41 MPa~~
- ~~Shell-side design temperature: 0 to 121°C~~
- ~~Tubes: stainless steel, welded into stainless tube sheet~~
- ~~Tube-side design pressure: 0.69 MPa~~
- ~~Tube-side design temperature: 0 to 65.6 °C~~
- ~~Code of construction: TEMA Class C~~

~~Charcoal adsorbers (Items D012A and D012B-J)~~
- ~~Carbon steel vessels filled with activated charcoal: 4500 kg D012A, 13,600 kg D012B-J~~
- ~~Height: approximately 10.4m~~
- ~~Outside diameter: approximately 1.2m D012A, 2.1m D012B-J~~
- ~~Design pressure: 2.41 MPa~~
- ~~Design temperature: 4.4 to 121°C~~
- ~~Code of construction: ASME Section VIII, Division 1~~

~~Filter (Item D016, 1 required)~~
- ~~Carbon steel vessel with removable HEPA filter~~
- ~~Height (includes legs): approximately 1.8m~~
- ~~Outside diameter: approximately 0.61m~~
- ~~Flow: 425 m^3/h at 2.54 cm H_2O gauge~~
- ~~Design pressure: 2.41 MPa~~
- ~~Design temperature: 4.4 to 65.6°C~~
- ~~Code of construction: ASME Section VIII, Division 1~~

Table 11.3-2 Offgas System Major Equipment Items (Continued)

Preheater
- *Quantity: 2*
- *Type: shell and tube heat exchanger*
- *Material: stainless steel vessel*
- *Shell length: approximately 4.5 m*
- *Shell OD: approximately 2.0m*
- *Shell-side design pressure: 0.96 MPa*
- *Shell-side design temperature: 188 °C*
- *Tubes: stainless steel, expand and welded into stainless steel tube sheet*
- *Tube-side design pressure: 2.41 MPa*
- *Tube-side design temperature: 232 °C*
- *Code of construction: ASME B&PVC, Section VIII, and TEMA*

Recombiner
- *Quantity: 2*
- *Material: stainless steel vessels*
- *Catalyst support: Stainless steel*
- *Height (includes legs): approximately 4.0m*
- *Outside diameter: approximately 2.5m*
- *Design pressure: 2.41 MPa*
- *Design temperature: 482 °C*
- *Catalyst: precious metal on ceramic or metal base*
- *Code of construction: ASME B&PVC, Section VIII*

Condenser
- *Quantity: 2*
- *Type: shell and tube heat exchanger*
- *Material: stainless steel vessel*
- *Shell length: approximately 5.5m*
- *Shell OD: approximately 1.0m*
- *Shell-side design pressure: 2.41 MPa*
- *Shell-side design temperature: 482 °C*
- *Tubes: stainless steel, expand and welded into stainless steel tube sheet*
- *Tube-side design pressure: 1.37 MPa*
- *Tube-side design temperature: 70 °C*
- *Code of construction: ASME B&PVC, Section VIII, and TEMA*

Cooler condenser
- *Quantity: 2*
- *Type: shell and tube heat exchanger*
- *Material: stainless steel vessel*
- *Shell length: approximately 4.0m*
- *Shell-side design pressure: 2.41 MPa*
- *Shell-side design temperature: 66 °C*
- *Tubes: stainless steel, expand and welded into stainless tube sheet*
- *Tube-side design pressure: 1.37 MPa*
- *Tube-side design temperature: 70 °C*
- *Code of construction: TEMA Class C*

Table 11.3-2 Offgas System Major Equipment Items (Continued)

Charcoal adsorbers *Quantity: One Guard Bed, four Charcoal adsorber* *Material: low carbon steel vessels filled with activated charcoal, one Guard bed of 4,721kg, four Charcoal adsorber of 27,200 kg* *Height: Guard bed approximately 5.0 m, Charcoal adsorber approximately 15.0 m* *Outside diameter: Guard bed approximately 2.2 m, Charcoal adsorber approximately 2.5 m* *Design pressure: 2.41 MPa* *Design temperature: 121°C* *Code of construction: ASME Section VIII, Division 1* *Filter* *Quantity: 1* *Material: low carbon steel vessel with removable HEPA filter* *Height (includes legs): approximately 1.5m* *Outside diameter: approximately 1.0m* *Flow: 96.4Nm3/h at 250Pa* *Design pressure: 2.41 MPa* *Design temperature: 66 °C* *Code of construction: ASME Section VIII, Division 1* *Vacuum pump* *Quantity: 2* *Type: Rotary type* *Material: Stainless steal casing* *Height: approximately 1.0 m* *Width: approximately 1.0m* *Length: approximately 2.0m* *Flow: 200 Nm3/h* *Code of construction: API-610, API-674, API-675, ASME Section VIII, Division 1, or Division 2* *Auxiliary: Recirculation water tank, Recirculation water pump (two units), Recirculation water cooler.*

Table 11.3-3 Equipment Malfunction Analysis

Equipment Item	Malfunction	Consequences	Design Precautions
Preheater~~Recombiner preheater~~	*Steam leak*	*Would further dilute offgas. Steam consumption would increase.*	*Spare recombiner.*
	Low-pressure steam supply	*Recombiner performance would fall off at low-power level, and hydrogen content of recombiner gas discharge would increase eventually to a combustible mixture.*	*Low-temperature alarms on preheater exit (catalyst inlet). Downstream H_2 analyzer.*
Recombiner ~~catalyst~~	*Catalyst gradually deactivates*	*Temperature profile changes through catalyst. Eventually, excess H_2 would be detected by H_2 analyzer or by gas flow meter. Eventually, the gas could become combustible.*	*Temperature probes in catalyst bed and H_2 analyzer provided. Spare recombiner.*
Condenser ~~Recombiner condenser~~	*Cooling water leak*	*The coolant (TCW~~reactor condensate~~) would leak to the process gas (shell) side. This would be detected if drain well liquid level increases. Moderate leakage would be of no concern from a process standpoint. (The process condensate drains to the hotwell.)*	*Drain well high level alarm. Redundant recombiner.*

Table 11.3-4 Offgas System Instrument Setpoints

Item	Function	MPL	Normal Range	Operational Limits	Sensor Type (Qualifications)	Scale Range (Tolerance)	Setpoint/ Alarm
1	Steam Flow to Final SJAE (*)	N39-FE005	100-105%	75-115%	Superheated Steam (10 –254 °C) (0 – 4.12 MPa)	0 – 120% (±125 kg/h)	L 75% Trip AH 110% AL 95%
2	Not Used						
3	Preheater Inlet Pressure	PT001	-2.0 kPa	N/A	Offgas and Steam (10 – 315 °C) (-0.1 – 7.24 MPa)	-100 – 400 kPa (± 4 kPa)	AH 295 kPa
4	Air Bleed Pressure	PI101	0.69 – 0.87 MPa	N/A	Air (10 – 65 °C) (0 – 1 MPa)	0 – 1 MPa (± 0.005 MPa)	N/A
5	Air Bleed Flow – Total (**)	FI102	1.7 – 48.2 m^3/h	1.7 – 105 m^3/h	Air (10 – 65 °C) (0 – 1 MPa)	0 – 100 m^3/h (± 5 m^3/h)	N/A
6	Air Bleed Flow – Normal (**)	FI104	1.7 – 2.4 m^3/h	1.7 m^3/h	Air (10 – 65 °C) (0 – 1 m^3/h)	0 – 3.7 m^3/h (± 0.17 m^3/h)	N/A
7	Recombiner Inlet Temp.	TE004	150 °C	105 – 399 °C	Offgas and Steam (10 – 482 °C) (-0.1 – 2.41MPa)	0 – 400 °C (± 5°C)	AL 140 °C
8	Not Used						
9	Temperature Profile of Recombiner	TE006 TE007	150 – 443 °C	121 – 482 °C (***)	Offgas and Steam (10 – 550 °C) (-0.1 to 2.41 MPa)	0 – 550 °C (± 7.5 °C)	AH 443 °C AL 140 °C
10	Not Used						
11	Offgas Cond. Water Level	LT009	< 150 mm	< 260 mm	Water (10 – 100 °C) (-0.1 – 7.24 MPa)	0 – 550 mm (± 5.5 mm)	AH 245 mm
12	Offgas Cond. Loop Seal Water Flow	FI008	9 m^3/h	9.35 m^3/h	Water (10 – 100 °C) (-0.1 – 2.41 MPa)	0 – 20 m^3/h (± 2 m^3/h)	N/A
13	Not Used						

Table 11.3-4 Offgas System Instrument Setpoints (Continued)

Item	Function	MPL	Normal Range	Operational Limits	Sensor Type (Qualifications)	Scale Range (Tolerance)	Setpoint/ Alarm
14	Offgas Cond. Exit Temp.	TE011	< 55 °C	N/A	Offgas (10 – 100°C) (-0.1 – 7.24 MPa)	0 – 100°C (± 2°C)	N/A
15	Hydrogen Analyzer	P91- H2E010 H2E011	0 – 0.1% by V. 0 – 1.0% by V.	0 – 4% by V.	Offgas (10 – 100 °C) (-0.1 to 7.24 MPa)	0 – 4% by V. (± 0.15% by V.)	AH 2% by V.
16	Air Bleed – Inlet at Cooler Cond. (**)	FI104	0 – 1.7 m^3/h	0 – 3.4 m^3/h	Air (10 – 65 °C) (0 to 1 MPa)	0 – 3.4m^3/h (± 0.3 m^3/h)	N/A
17	Cooler Cond. Exit Temp.	TE013	10 – 20 °C	N/A	Offgas (0 – 66 °C) (-0.1 – 7.24 MPa)	0 – 50 °C (± 1°C)	N/A
18	Charcoal Adsorber Inlet Press.	PT022	-14.7 kPa	N/A	Offgas (0 – 66 °C) (-0.1 – 7.24 MPa)	-100 – 200 kPa (± 0.002 MPa)	N/A
19	Charcoal Adsorber Diff. Press.	DPT024	0.002 – 0.02 MPa	0.027 MPa	Offgas (4 – 121 °C) (-0.1 – 7.24 MPa)	0 – 30 kPa (± 0.15 kPa)	AH 0.02 MPa
20	Charcoal Adsorber Vessel Temperature	TE025 TE028	27°C	22 – 32 °C	Offgas (4 – 121 °C) (-0.1 – 7.24 MPa)	0 – 150 °C (± 5 °C)	AH 60 °C
21	Charcoal Adsorber Vault Temp. Control	TE031	24 – 30 °C	23 – 31 °C	Ambient Air (0 – 50 °C)	0 – 50 °C (± 0.5 °C)	27 °C
22	Charcoal Vault Inlet Water Level	LS023	0 – 1 m	0.05 – 1.5 m	Water (4 – 100 °C) (-0.1 – 7.24 MPa)	0 – 1.5 m (± 0.01 m)	AH 1.2 m AL 0.1 m
23	Charcoal Vault Exit Temperature	TE032	N/A	4 – 31 °C	Ambient Air (0 – 50 °C)	0 – 50 °C (± 0.5 °C)	AH 30 °C AL 23 °C

Table 11.3-4 Offgas System Instrument Setpoints (Continued)

Item	Function	MPL	Normal Range	Operational Limits	Sensor Type (Qualifications)	Scale Range (Tolerance)	Setpoint/ Alarm
24	After Filter Differential Pressure	DPT029	50 – 250 Pa	1.0 kPa	Offgas (0 – 121 °C) (-0.1 – 7.24 MPa)	0 – 5 kPa (± 0.032 kPa)	AH 0.9kPa
25	Process Flow (**)	FT020 FT021	10 – 20 m^3/h	0 – 96.4m^3/h	Offgas (0 – 121 °C) (-0.1 – 7.24 MPa)	Narrow Range: 0 – 50 m3/h (± 0.75 m^3/h) Wide Range: 0 – 100 m^3/h (± 1.5 m^3/h)	AL 10 m^3/h AH 40 m^3/h AHH 80 m^3/h

* Based on Full Power Flow of 5000 kg/hr steam
** Flow is at Standard Atmosphere
*** Operational Limit for standby recombiner is 160 – 300°C.

Table 11.3-5 REGULATORY GUIDE 1.110 COST DATA (1)
(Costs are in 1000s of 1975 Dollars)

Cost-Benefit Parameter	3-Ton Charcoal Adsorber
Equipment and Material Direct Cost (2)	53
Direct Labor Cost (DLC) (2)	14
Labor Cost Correction Factor (LCCF) (3)	1
Annual Operating Cost (AOC)	Negligible
Annual Maintenance Cost (AMC)	Negligible

Notes:
(1) All costs are on a per unit basis.
(2) Equipment and Material Direct Costs and Direct Labor Costs are from Table A-1 of Regulatory Guide 1.110.
(3) The Labor Cost Correction Factors are from Table A-4 of Regulatory Guide 1.110. The lowest LCCF is chosen which maximizes the benefit.
(4) The Annual Operating Costs are from Table A-2 of Regulatory Guide 1.110.
(5) The Annual Maintenance Costs are from Table A-3 of Regulatory Guide 1.110.

Table 11.3-6 Gaseous Radwaste Augment Benefit Cost Ratio Summary

Augment	Total Annual Costs (1975 Dollars)	Collective 50 Mile Total Body Dose Saved per Year (Person-Rem)	Benefit in 1975 Dollars (1000 Dollars x Person Rem Saved)	Benefit Cost Ratio
3-Ton Charcoal Adsorber	7,750	0.58	580	7.48E-02

11.4 Solid Waste Management System

This section of the reference ABWR DCD including all subsections, figures, and tables is replaced completely. This is due to a departure in the design of the solid waste management system. This departure deletes the solidification, incineration and compacting process.

STD DEP 11.4-1

11.4.1 Design Bases

11.4.1.1 Design Objective

The Solid Waste Management System (SWMS) is designed to control, collect, handle, process, package, and temporarily store wet and dry solid radioactive waste prior to shipment. This waste is generated as a result of normal operation and anticipated operational occurrences, including refueling operation and back to back refueling.

The SWMS is located in the radwaste building. It consists of the following four subsystems:

- Spent resins and sludge collection and processing subsystem
- Mobile dewatering processing subsystem
- Dry active waste accumulation and conditioning subsystem
- Container storage subsystem

The SWMS Process Flow Diagram is provided in Figure 11.2-1. Radwaste System Piping and Instrumentation Diagrams are provided in Figures 11.2-2. The radwaste building general arrangement drawing are provided in Figures 1.2-23a through 1.2-23e. The expected annual wet and dry waste volume generated from the SWMS subsystems are provided in Table 11.4-1 and 11.4-2, respectively. The estimated annual shipped waste volumes generated from the SWMS subsystems are provided in Table 11.4-3. The SWMS component capacities are provided in Table 11.4-4. Capability of the SWMS to process expected waste is provided in Table 11.4-5. The isotopic inventory of the as-shipped waste is provided by waste type in Section 12.2.

Process and effluent radiological monitoring systems are described in Section 11.5.

No subsystems of the SWMS and the radwaste building that house the SWMS are shared between STP 3 & 4.

11.4.1.2 Design Criteria

The SWMS is designed to provide collection, processing, packaging, and storage of sludge, spent resin, filter backwash, and dry solid waste resulting from normal operations.

- The SWMS is designed to meet the guidance of Regulatory Guide 1.143. SWMS component classifications are described in Table 3.2-1 (K1, U13).
- The SWMS is designed to keep the exposure to plant personnel “as low as reasonably achievable” (ALARA) during normal operation and plant maintenance, in accordance with Regulatory Guide 8.8.
- The SWMS is designed to package solid waste in Department of Transportation (DOT)-approved containers for off-site shipment and burial.
- The SWMS is designed to prevent the release of significant quantities of radioactive materials to the environment so as to keep the overall exposure to the public within 10 CFR 20 limits.
- The SWMS is designed to package the wet and dry types of radioactive solid waste for off-site shipment and burial, in accordance with the requirements of applicable NRC and Department of Transportation (DOT) regulations, including 10 CFR 61, 10 CFR 71 and 49 CFR 171 through 180, as applicable. This design results in radiation exposures to individuals and the general population within the limits of 10 CFR 20.
- The seismic and quality group classification and corresponding codes and standards that apply to the design of the SWMS components and piping, and the structures housing the SWMS are discussed in Section 3.2.
- The non-safety related SSC Quality Control Programs for the SWMS is described in the STP 3 & 4 Quality Assurance Program description in section 17.5S..
- On-site storage space for 6-month's volume of packaged waste is provided in the radwaste building. Radioactive Waste produced at STP 3 & 4 will normally be shipped to a licensed facility for disposal. However, should disposal circumstances change, an Onsite Staging Facility (OSF) as described in the Unit 1 & 2 UFSAR Section 11.4 is available to provide a staging area for the waste generated.
- All atmospheric collection and storage tanks are provided with an overflow connection at least the size of the largest inlet connection. The overflow is connected below the tank vent and above the high-level alarm setpoint. Each tank room is designed to contain the maximum liquid inventory in the event that the tank ruptures per NUREG-0800, Standard Review Plan, BTP 11-6. Each tank compartment is stainless steel-lined up to a height equivalent to the tank capacity in the room as described in Section 15.7.3.1.
- The SWMS has no safety-related function. There is no liquid plant discharge from the SWMS. Failure of the subsystem does not compromise any safety-related system or component nor does it prevent shutdown of the plant. No interface with the safety-related electrical system exists.

Radionuclide influents to the SWMS are presented in Section 12.2. Any resultant gaseous and liquid wastes are routed to other plant sections. Gaseous radionuclides

from the SWMS are processed by the monitored radwaste building ventilation system. The monitored ventilation system is described in Section 9.4 and Section 11.5. Liquid waste is processed by the monitored LWMS system as described in Section 11.2. Process and effluent radiological monitoring systems are described in Section 11.5.

Section 12.3 describes systems to detect conditions that may result in excessive radiation levels per Title 10 Code of Federal Regulations Part 50, Appendix A, GDC 63. Section 11.5 describes systems to monitor the effluent discharge paths for radioactive material per Title 10 Code of Federal Regulations Part 50, Appendix A, GDC 64.

A description of the SWMS design features addressing 10 CFR 20.1406 requirements for permanently installed systems is in Subsection 11.2.1.2.4. These design features apply to the SWMS permanent equipment and skid mounted mobile units.

The Area Radiation Monitors for the Radwaste Building spent resins and sludge collection subsystem area, dewatering equipment area, DAW and wet solid waste accumulation area, and high activity waste storage area are depicted on Figure 12.3-41 and discussed in Subsection 12.3.4.

The mobile dewatering processing equipment is located within the radwaste building as shown in Figure 1.2-23c. Effluents from the SWMS (such as dewatering liquid) are treated by the LWMS. Any airborne activity will be processed through the radwaste building exhaust as discussed in subsection 9.4.6.

STP 3 & 4 is responsible, initially and subsequently, for the identification of mobile/portable LWMS connections that are considered non-radioactive, but later may become radioactive through interfaces with radioactive systems; i.e., a non-radioactive system becomes contaminated due to leakage, valving errors or other operating conditions in radioactive systems. STP 3 & 4 uses operating procedures to ensure the guidance and information in Inspection and Enforcement (IE) Bulletin 80-10 (May 6, 1980) is followed. The SWMS mobile systems are not connected to the potable or sanitary water system. All non-radioactive connections (e.g., makeup water for flushing, service air for sluicing process) to the radwaste system (including the mobile system) contain double isolation e.g., check valves and isolation valve to prevent cross contamination of the non-radioactive system.

Subsection 11.2.1.2.4 addresses the design requirements to minimize contamination of the facility and environment, facilitate decommissioning, and minimize the generation of radioactive waste, in compliance with 10 CFR 20.1406. This includes the design requirements for connections that are considered non-radioactive, but later may become radioactive through interfaces with radioactive systems. ‘Minimization’ is based on good engineering practice, and/or cost benefit analysis to keep waste generation and dose to as low as reasonably achievable.

11.4.2 System Description

11.4.2.1 General Description

The SWMS controls, collects, handles, processes, packages, and temporarily stores solid waste generated by the plant prior to shipping the waste offsite. The SWMS processes the filter backwash sludge, reverse osmosis rejects, powdered resin sludge and spent resins generated by the Liquid Waste Management System (LWMS), Reactor Water Cleanup System (CUW), the Fuel Pool Cooling and Cleanup System (FPCS), the Suppression Pool Cleanup System and the Condensate Purification System. Contaminated solids such as High Efficiency Particulate Air (HEPA) and cartridge filters, rags, plastic, paper, clothing, tools, and equipment are also disposed of in the SWMS.

The SWMS is capable of receiving, processing, and dewatering the solid radioactive waste inputs for permanent off-site disposal. Liquids from SWMS operations are sent to the appropriate LWMS section for processing as depicted in Figure 11.2-1 and described in Section 11.2.

11.4.2.2 System Operation

11.4.2.2.1 General Requirements

The SWMS complies with Regulatory Guide 1.143, Revision 2, November 2001, as noted in Subsection 11.4.1. The radwaste building is designed to meet the guidance of Regulatory Guide 1.143. Regulatory Guide 1.143, Section 4.1, instructs that the design of radioactive waste management systems, structures and components should follow the direction in Regulatory Guide 8.8. Demonstration of compliance with Regulatory Guide 8.8, Revision 3, June 1978 is located in Subsection 12.1.1.3 and Subsection 12.3.1.

The SWMS consists of four process subsystems described in Subsections 11.4.2.2.2, 11.4.2.2.3, 11.4.4, and 11.4.5.

11.4.2.2.2 Spent Resins and Sludges

The spent resins and sludge collection subsystem collects the filter backwash sludge, reverse osmosis rejects, powdered resin slurry and spent resin into one of the five tanks in accordance with the waste characteristics. The spent resin and sludge tanks are categorized as follows:

- One CUW Backwash Receiving Tank for receiving CUW and FPCS sludge (spent resin) fitted with a filter in its vent line prior to exhaust to the HVAC system.
- One CF Backwash Receiving Tank for receiving the Condensate Polishing System filter sludge
- One Liquid Waste (LW) Backwash Receiving Tank for receiving the LWMS filter sludge and reverse osmosis rejects

- Two Spent Resin Storage Tanks for receiving LWMS spent bead resin and Condensate Purification System spent bead resin

The capability exists to keep the spent resins from the Condensate Purification System and the spent resins from the LWMS ion exchangers in separate spent resin storage tanks for radioactive decay and storage. Excess water from the spent resin storage tanks is sent to the LCW collector tank or HCW collector tank by a pump. The used condensate polishing resin from the Condensate Purification System may be used in the HCW demineralizer (A) in the high conductivity waste subsystem.

When sufficient spent bead resins have been collected in the spent resin storage tank, they are sent to the mobile dewatering processing subsystem via the spent resin slurry pump. When condensate spent bead resins have been collected in the spent resin storage tank, they are mixed via the spent resin slurry pump and sent to the HCW demineralizer (A) for reuse or to the mobile dewatering processing subsystem via the spent resin slurry pump.

The sludges from the Reactor Water Cleanup (CUW) System, the Fuel Pool Cooling and Cleanup System, the Suppression Pool Cleanup System are collected in the CUW backwash receiving tank. The filter backwashings from the Condensate Polishing System are collected in the CF backwash receiving tank. The sludges from the LWMS are collected in the LW backwash receiving tank. Sludges from powdered resins are transferred to two phase separators.

The capability exists to keep the higher activity sludges and the lower activity sludges in two separate phase separators. The segregation of the high activity sludge and low activity sludge in the phase separators is maintained by administrative control. Excess water from the phase separators is sent to the LCW collector tank or HCW collector tank by a pump.

The two phase separators receive suspended solid slurries from the CUW backwash receiving tank, the CF backwash receiving tank, and the LW backwash receiving tank. The suspended solids are allowed to settle and the residual water is transferred by the phase separator decant pump to the LCW collector tanks or HCW collector tanks for further processing. When sufficient sludges have been collected in the tank, the sludges are mixed and sent to the mobile wet solid waste processing subsystem by the slurry/recirculation sludge pump.

During transfer operations of the spent bead resins, the powdered spent resin slurries and the sludges, the suspended solids are kept suspended by the recirculating process to prevent the suspended solids from agglomerating and possibly clogging lines. Flush connections are provided to prevent resin or slurry possibly clogging of the lines after transfer operations.

The LW backwash receiving tank receives suspended solid slurries from such streams as the filter backwashes and rejects from the reverse osmosis units of the LWMS mobile systems. When sufficient waste has been collected in the tank, the waste is sent to the mobile dewatering processing subsystem by the LW backwash transfer pump or to the phase separator. The rejects from the mobile reverse osmosis system

of the LWMS collected in the LW backwash receiver tank may be sent to the HCW demineralizer (A) by the LW backwash transfer pump to be treated using the condensate resin prior to disposal.

Mobile Dewatering Processing Subsystem

The mobile dewatering processing subsystem consists of a dewatering station for high activity sludge and a dewatering station for low activity spent resin and sludge. An empty high integrity container (HIC) is lifted off of a transport trailer and placed in each empty dewatering station. The tractor/trailer may then be released. The HIC closure lid is removed and placed in a laydown area. Spent cartridge filters may be placed in the HIC at this point, if not shipped in separate containers.

Next, the fill head is positioned over the HIC with a crane. The fillhead assembly is provided with a level detection system, a camera and light assembly, a mechanical level indicator and a temperature measurement. The fill head closed circuit television camera allows for remote viewing of the fill operation. The level detection system will automatically close the waste control valve on high level. The HIC is then filled with designated wet solid waste. The capability to obtain samples during the fill operation is provided. A radiation monitor on the transfer line to the HIC allows for the monitoring of the dose rate of the slurry being added to the HIC.

Excess water is removed from the HIC and sent by a pump to the HCW collector tank that is in the receiving mode. Sufficient water is removed to ensure there is very little or no free standing water left in the HIC to meet burial site or offsite processors waste acceptance criteria. Drying of the HIC contents may also be performed with heated air or pressure reduction. Condensate from drying is drained to the LWMS. The HICs are vented to the radwaste building HVAC system.

The fill head is then removed and placed in a laydown area. The closure head is then placed on the HIC. The HIC is inspected to insure the surface is clean before it is moved to the temporary storage area. The HIC is provided with a passive vent to prevent gas buildup. Radiation shielding is provided around the HIC stations.

The estimated annual shipped waste volumes from processing wet solid wastes are presented in Table 11.4-3. The mobile dewatering processing subsystem is connected to the SWMS tanks and pumps as shown in Figure 11.2-2 (Sheet 17 of 36).

11.4.2.2.3 Dry Active Waste (DAW)

Dry solid wastes consist of air filters, miscellaneous paper, rags, etc., from contaminated areas; contaminated clothing, tools, and equipment parts that cannot be effectively decontaminated; and solid laboratory wastes. The off gas system activated carbon is rejuvenated by the off gas system and does not normally generate dry solid waste. Project specific actions will be developed regarding the removal, replacement, and processing of off gas activated carbon in the unlikely event that significant quantity of off gas system activated carbon requires replacement during the life of the plant. The activity of much of the dry solid wastes is low enough to permit handling by contact. These wastes are collected in containers or bags located in appropriate areas

throughout the plant, as dictated by the volume of wastes generated during operation and maintenance. The filled containers or bags are sealed and moved to controlled-access enclosed areas for temporary storage.

Most dry waste is expected to be sufficiently low in activity to permit temporary storage in unshielded, cordoned-off areas. Dry Active Waste (DAW) is sorted and packaged in a suitably sized container that meets DOT requirements for shipment to either an off-site processor or for ultimate disposal. The DAW is normally separated into three categories: non-contaminated wastes (clean), contaminated metal wastes, and the other wastes, i.e., clothing, plastics, HEPA filters, components, etc. Higher dose rate DAW is separated from other DAW to reduce dose during handling and facilitate shipment of shielded containers. Non-contaminated (clean) materials identified during the sorting process are removed for plant reuse or general debris disposal.

In some cases, large pieces of miscellaneous waste are packed into larger boxes. Because of its low activity, this waste can be stored until enough is accumulated to permit economical transportation to an off-site burial ground for final disposal.

The capability exists to bring a shipping container into the radwaste building truck bay. Bagged DAW can be directly loaded into the shipping container for burial or processing in off-site facilities. A weight scale is provided to ensure optimum shipping/disposal weight of the shipping container.

Cartridge filters that are not placed in HICs are placed in suitability-sized containers meeting DOT requirements.

The estimated shipped waste volumes from processing DAWs are presented in Table 11.4-3.

11.4.2.2.4 Environmental and Exposure Control

During the operation of the wet waste processing and dewatering equipment, the individual component vent systems assure that dust or contaminated air are not released to the work spaces.

11.4.2.2.5 Malfunction Analysis

The process system is protected from component failure and operator error through a series of safety measures. These safety measures include:

- Verification that the fillhead dewatering assembly is properly covering the container prior to start of filling and dewaterign process
- High level alarm with automatic waste control valve shutoff
- Remote viewing of the container during filling and dewatering processes using a camera and light assembly
- Verification of the waste radiation dose rate using a radiation monitor on the transfer line to the container

11.4.2.2.6 Shipment

Waste is classified as A, B, or C and meet the requirements of the waste treatment facility or repository per 10 CFR 61.55 and 61.56. The packaging and shipment of radioactive solid waste for disposal will be in compliance with 10 CFR 20 Appendix G and 49 CFR 173, Subpart I. The expected annual volumes of solid radioactive waste to be shipped offsite for each unit are estimated in Table 11.4-3. The number and types of containers required to ship this volume of waste are estimated in Table 11.4-6. Specific container types are determined by STP 3 & 4 operating procedures and may be different from the containers identified in Table 11.4-6. It is expected that all of the dry waste and more than 90% of the wet waste will be Class A waste. The remaining waste will be Class B waste. Number of shipments is determined by STP to support plant operations.

11.4.2.2.7 Contingencies for Class B and C Wastes

It is expected that Class B and C wastes will constitute about 5% of the low level radioactive waste (LLRW) that will be generated by the plant, with the balance being Class A waste (with small amounts of greater than Class C wastes that are subject to separate disposal provisions). As of July 1, 2008, the LLRW disposal facility in Barnwell, South Carolina is no longer accepting Class B and C waste from sources in states such as Texas that are outside of the Atlantic Compact. However, the disposal facility in Clive, Utah, is still accepting Class A waste from out of state.

STP 3 & 4 plans to load fuel in 2015 and begin operation no earlier than 2016 and therefore will not be generating Class B and C waste until then. Typically it takes about a year after fuel load before a sufficient quantity of B/C waste is generated to warrant a shipment for disposal. By that time, it is probable that a commercial disposal facility for the Texas Compact will be available to accept Class B and C waste from sources in Texas. In particular, in 2004, Waste Control Specialists applied for a license from the Texas Commission on Environmental Quality (TCEQ) to develop a disposal facility in Andrews County, Texas for Class A, B and C waste.

However, in the event that there are no disposal facilities that will accept Class B and C wastes from sources in Texas at the time the plant begins operation, there are several options available for storage of such waste pending shipment offsite once a disposal facility becomes available:

- As provided in the Section 11.4.1.2, STP 3 & 4 Radwaste Building is designed to have 6 months of storage capacity for LLRW. Since Class B and C waste constitute only about 5% of the total LLRW, the Radwaste Building has about 10 years of safe storage capacity if it used solely for storage of Class B and C waste and if Class A waste is promptly shipped offsite. Also the waste tables in Section 11.4 are not based on a volume reduction (VR) process. Hence it is possible to extend this storage time frame by utilizing commercially available off-site waste processors. For example a VR of 8 to 10 is presently being achieved for resins.

- As provided in Section 11.4.1.2, STP 1 & 2 have an Onsite Staging Facility (OSF) that could be used to store waste from STP 3 & 4 if that should become necessary. As explained in the Section 11.4.2.3.2 of the STP 1 & 2 UFSAR, the OSF has a 5-year LLRW storage capacity for Units 1 and 2. If that storage capacity were to be devoted to Class B and C waste, the OSF would have approximately 100 years of safe storage capacity for two units or 50 years for four units, assuming that Class A waste is shipped offsite in the normal course of business. Just as explained above, the storage duration could be extended by utilizing VR.

- If still additional storage capacity were eventually to be needed, STP 3 & 4 could construct storage facilities in accordance with applicable NRC guidance, such as Regulatory Issue Summary (RIS) 2008-12, Considerations for Extended Interim Storage of Low-Level Radioactive Waste by Fuel Cycle and Materials Licenses, and NUREG 0800 Section 11.4.

If STP 3 & 4 were to need to store Class B and C waste for an extended period of time, it would implement the provisions of RIS 2008-12 and NUREG 0800 Section 11.4.

11.4.3 COL License Information

11.4.3.1 Plant-Specific Solid Radwaste Information

The following site-specific supplement addresses COL License Information Item 11.3.

(1) STP 3 & 4 do not utilize an incinerator system.

(2) The wet waste solidification process and the spent resin and sludge dewatering process will result in products that comply with 10 CFR 61.56 for STP 3 & 4 as provided in Radioactive Waste Process Control Program (PCP). The site PCP utilized by Units 1 & 2 is provided with the COL application, and will be implemented by Units 3 & 4. The latest revision will be provided as per the schedule in Table 13.4S-1. The PCP will incorporate the guidance from NEI 07-10A, "Generic FSAR Template Guidance for Process Control Programs (PCP)".

(3) Establishment and implementation of a process control program (PCP) for the dewatering processing of the spent resins and filter sludges for STP 3 & 4 is provided in Radioactive Waste Process Control Program (PCP). The site PCP utilized by Units 1 & 2 is provided with the COL application, and will be implemented by Units 3 & 4. The latest revision will be provided as per the schedule in Table 13.4S-1. The PCP will incorporate the guidance from NEI 07-10A, "Generic FSAR Template Guidance for Process Control Programs (PCP)".

(4) On-site storage space for 6-months volume of packaged waste is provided. Packaged waste includes HICs, shielded filter containers and 55-gallon (200-liter) drums and boxes as necessary. The projected 6-months solid waste containers required to be stored on-site in the radwaste building are summarized in Table 11.4-6. The on-site storage area in the Radwaste

Building is located along the left or west wall of the truck bay area shown in Figure 1.2-23c. Moveable shielding is used to shield the high activity containers located in the on-site storage area.

(5) Radioactive waste shipping packages meet the requirements in 10 CFR 71 for STP 3 & 4 as provided in the plant radiation protection program as described in Section 12.5.3.

(6) Based on the as-built design, set points for the liquid discharge radiation monitor are established in Section 11.5.

11.4.4 Mixed Waste Processing

STP 3 & 4 is not expected to generate any mixed waste. The mixed waste volumes generated and shipped, if any, are anticipated to be less than or equal to the volumes provided in Table 11.4-3. If mixed waste is generated, it will be collected primarily in 55-gallon collection drums and sent offsite to an appropriately permitted vendor processor. However, should circumstances dictate the storage or disposal of larger quantities of mixed waste, other approved containers, such as HICs, or use of multiple approved containers can be used. Storage and disposal of mixed waste will be in accordance with the facility's NRC license, DOT transportation regulations, EPA mixed waste regulations, state and local regulations and associated permits.

11.4.5 Detailed System Component Description

The major components of the SWMS are as follows:

11.4.5.1 Pumps

Typically three types of pumps are utilized in the SWMS.

The SWMS process pumps are usually centrifugal or progressive cavity pumps constructed of materials suitable for the intended service. Air-operated diaphragm type pumps are generally utilized in dewatering stations.

Pump codes for the SWMS are per RG 1.143 guidance as shown in Table 11.2-1.

11.4.5.2 Tanks

Tanks are sized to accommodate a sufficient volume of waste sludges or spent resin to fill a HIC. The SWMS tanks are sized for normal plant waste volumes with sufficient excess capacity to accommodate equipment downtime and expected maximum volumes that may occur. Each phase separator is capable of accommodating at least 60 days of waste generation at normal generation rates of powdered resins from the CUW system, FPC System, and the Suppression Pool Cleanup System. Each spent resin storage tank is capable of accommodating at least 30 days of waste generation at normal generation rates of spent resins from the Condensate Polishing System and the LWMS. The LW backwash receiving tank is capable of accommodating at least 30 days of waste generation at normal generation rates of slurries (filter backwashing and reverse osmosis reject) from the LWMS. Table 11.4-5 includes the holdup times for the phase separators, LW backwash receiving tank and the spent resin storage tanks.

The tanks are constructed of stainless steel to provide a low corrosion rate during normal operation. They are provided with mixing eductors and/or air spargers. The capability exists to sample all SWMS tanks. All SWMS tanks are vented through a filtration unit and the exhausted air is eventually discharged via the radwaste building HVAC system into the plant vent.

Each collection tank compartment is designed to contain the maximum liquid inventory in the event that the tank ruptures. Each collection tank compartment is steel-lined up to a height equivalent to the tank capacity in the room as described in Section 15.7.3.1.

The vent and overflow nozzles of the spent resin tank are equipped with fine mesh screens to minimize spread of particulate contamination to the radwaste tank vent system.

Tank codes for the SWMS are per RG 1.143 guidance as shown in Table 11.2-1.

11.4.5.3 Piping

Piping used for hydraulic transport of slurries such as ion exchange resins, filter backwash (sludge), and waste tank sludge are specifically designed to assure trouble-free operation. Pipe flow velocities are sufficient to maintain a flow regime appropriate to the slurry being transported (ion exchange resins, filter backwash, or tank sludge). An adequate water/solids ratio is maintained throughout the transfer. Slurry piping is provided with manual and automatic flushing with a sufficient water volume to flush the pipe clean after each use, i.e., at least two pipe volumes.

Piping codes for the SWMS are per RG 1.143 guidance as shown in Table 11.2-1.

11.4.5.4 Venting

Exhaust ventilation is described in Section 9.4.

11.4.5.5 Mobile Dewatering Processing Subsystem

The radwaste treatment systems include modular mobile system skids that are designed to be readily replaced during the life of the plant. In-plant supply and return connections from permanently installed equipment to the mobile system are provided to ensure operational flexibility.

The mobile subsystem consists of equipment modules, with subcomponents, piping and instrumentation and controls necessary to operate the subsystem. Components are in module(s) designed for installation and replacement due to component failure and/or technology upgrade. The modules include shielding required between the radiation sources of the modules and access and service areas in the radwaste building. The modules are permanently installed in the radwaste building.

The SWMS mobile dewatering processing system is located in the Liquid Waste Treatment System bay area of the radwaste building to allow truck access and mobile system skid loading and unloading. Modular shield walls are provided in the RW to allow shield walls to be constructed, as necessary, to minimize exposure to personnel

during operation and routine maintenance. Solid radwaste processing is performed using mobile dewatering processing subsystem.

The mobile dewatering processing subsystem is comprised of dewatering fillhead assembly, dewatering pump skid, ~~waste~~ control valves, control console and dewatering container. The fillhead assembly is provided with a level detection system, a camera and light assembly, a mechanical level indicator and a temperature measurement. The dewatering containers include both HICs and carbon steel liners. The containers internal design includes elaborate filtration arrays, for dewatering the varying resin and filtration media. The mobile dewatering processing equipment is anticipated to be modernized as more effective technologies are discovered and proved throughout the life of plant operation. To effect this modernization, the various systems, structures and components associated with the mobile dewatering processing system may be grouped or associated on or in skids or assemblies, including ancillary equipment such as instrumentation, electrical components, mounting connections. The mobile dewatering processing subsystem is connected to the SWMS tanks and pumps as shown in Figure 11.2-2.

Solid waste system permanent equipment (tanks and pumps) is described throughout Section 11.4. Liquid waste processing is described in Section 11.2. Ventilation is described in Section 9.4. Instrumentation requirements are described in Section 11.4.5.

11.4.6 Testing and Inspection Requirements

The SWMS is tested during the preoperational test program as discussed in 14.2.12.1.75. The SWMS equipment will be performance tested to demonstrate conformance with design process capabilities. An integrity test is performed on the system upon completion.

Provisions are made for periodic inspection of major components to ensure capability and integrity of the systems. Display devices are provided to indicate parameters (such as process radiation levels) required in routine testing and inspection.

11.4.7 Instrumentation Requirements

The SWMS is operated and monitored from the radwaste control room or local operating stations within the facility. Major system parameters, i.e., tank levels, process flow rates, etc., are indicated and alarmed to provide operational information and performance assessment. Priority system alarms (such as process radiation levels) are repeated in the main control room. Instruments, including back flushing provisions, are located in low radiation areas when possible, as described in Section 12.3. These back flushing provisions are designed with the guidance of IE Bulletin 80-10.

Requirements for sampling are set forth in Subsection 9.3.2.

11.4.8 References

11.4-1 ANSI 55.1 –July 28, 1992, American National Standard for Solid Radioactive Waste Processing System for Light Water Reactor Plants.

Table 11.4-1 Expected Waste Volume Generated Annually by Each "Wet" Solid Waste and Tank Capacities

Wet Waste Source	Volume Generated (m^3/yr)	Typical Waste Classification
CUW F/D sludge[a]	4.7	B
FPC F/C sludge[a]	1.8	B
Condensate Filter sludge[a]	4.6	A
LCW Filter B sludge[b] HCW Filter B sludge[b] HCW Filter A sludge[e] HCW Reverse Osmosis Unit Reject[b]	0.6 2.4 1.4 73.0	A A A A
Condensate Demineralizer resin[c]	18.0	A
LCW Demineralizer resin[d]	1.8	A
HCW Demineralizer resin[d]	1.8	A

(a) The first three items in the table above are stored in either of two CUW phase separators which have a capacity of 100 m^3 each. During a normal period these three wastes are generated at a rate of about 2m^3 in 60 days.
(b) The LCW and HCW sludge (including RO reject) are stored in the LW backwash receiving tank. The LW backwash receiving tank has a capacity of 50 m^3. During a normal period about 10 m^3 is generated in 30 days.
(c) The condensate demineralizer resin is stored in one of the two spent resin storage tanks, each has a capacity of 50 m^3. During a normal period spent resin is generated at a rate of about 2m^3 in 30 days.
(d) The LCW and HCW demineralizers resin is stored in the one of the two spent resin storage tanks, each has a capacity of 50 m^3. During a normal period spent resin is generated at a rate of about 4m^3 every 365 days.
(e) The HCW Filter A sludge of 1.4 m^3 is generated every 365 days and collected in a container.

Thus, the storage requirements in BTP ETSB 11.3, Part B.III.1 are met.

Table 11.4-2 Estimate of Expected Annual "Dry" Solid Wastes

Dry Waste Source	Volume Generated(m^3/yr)
Combustible waste	225
Compactible waste	38
Other waste	100

Table 11.4-3 Estimated Shipped Solid Waste Volumes

Waste Type	Shipped Volume (m^3/yr)
Combustible Waste	225
Compactable Waste	38
Resins and Sludges	110
Other Waste	100
Mixed Waste	0.5

Table 11.4-4 Solid Waste System Component Data Summary

Component	Quantity	Standards	Type	Internal Vol per tank (m^3)	Design Pressure (kg/cm^2)	Design Temp (ºC)	Normal Operating Pressure (kg/cm^2)	Normal Operating Temp (ºC)	Material
Tanks									
CUW Backwash Receiving Tank	1	API-650/API-620	Cylindrical, Vertical	28	atm	80	atm	66	SS
CF Backwash Receiving Tank	1	API-650/API-620	Cylindrical, Vertical	60	atm	80	atm	66	SS
LW Backwash Receiving Tank	1	API-650/API-620	Cylindrical, Vertical	50	atm	80	atm	66	SS
Spent Resin Storage Tank	2	API-650/API-620	Cylindrical, Vertical	50	atm	80	atm	66	SS
Phase Separator	2	API-650/API-620	Cylindrical, Vertical	100	atm	80	atm	66	SS
CUW Backwash Transfer Pump	2	API-610; API-674; API-675; ASME Code Section VIII, Div. 1 or Div. 2	Centrifugal or Progressive Cavity/ Mechanical Seal	120	20	80	10	66	SS
CF Backwash Transfer Pump	2	API-610; API-674; API-675; ASME Code Section VIII, Div. 1 or Div. 2	Centrifugal or Progressive Cavity/ Mechanical Seal	120	20	80	10	66	SS

Table 11.4-4 Solid Waste System Component Data Summary (Continued)

Component	Quantity	Standards	Type	Internal Vol per tank (m^3)	Design Pressure (kg/cm^2)	Design Temp (°C)	Normal Operating Pressure (kg/cm^2)	Normal Operating Temp (°C)	Material
LW Backwash Transfer Pump	2	API-610; API-674; API-675; ASME Code Section VIII, Div. 1 or Div. 2	Centrifugal or Progressive Cavity/ Mechanical Seal	120	20	80	10	66	SS
Phase Separator Decant Pump	2	API-610; API-674; API-675; ASME Code Section VIII, Div. 1 or Div. 2	Centrifugal/ Mechanical Seal	10	20	80	10	66	SS
Phase Separator Slurry Recirculation/ Transfer Pump	2	API-610; API-674; API-675; ASME Code Section VIII, Div. 1 or Div. 2	Centrifugal or Progressive Cavity/ Mechanical Seal	200	20	80	10	66	SS
Spent Resin Decant Pump	2	API-610; API-674; API-675; ASME Code Section VIII, Div. 1 or Div. 2	Centrifugal/ Mechanical Seal	10	20	80	10	66	SS
Spent Resin Slurry Recirculation/ Transfer Pump	2	API-610; API-674; API-675; ASME Code Section VIII, Div. 1 or Div. 2	Centrifugal or Progressive Cavity/ Mechanical Seal	100	20	80	10	66	SS
Mobile Dewatering Processing Subsystem									
Mobile Dewatering Processing Subsystem	1	RG 1.1.43 (as applicable to components)	NA	NA	NA	NA	NA	NA	Based on component

Table 11.4-5 Capability of Solid Radwaste Subsystems to Process Expected Wastes

Wet Waste Source	Volume Generated (m^3/yr)	Batch Frequency (days)	Batch Volume (m^3)	Batch Transfer Mixture Factor	Total Batch Transfer Volume (m^3)	Designated Storage Unit(s)	Storage Unit Capacity (m^3)	Combined Batch Volume per Designated Storage Unit (m^3)	Number of Batches per Storage-Unit	Holdup Time (days)[c]
CUW F/D sludge	4.7[a]	60[a]	0.77	8.0	6.18	Phase Separator A	100	8.55	11.7	702
FPC F/C sludge	1.8[a]	60[a]	0.30	8.0	2.37					
Condensate Filter sludge	4.6[a]	60[a]	0.76	5.0	3.78	Phase Separator B	100	3.78	26.4	1587
LCW Filter B sludge	0.6	30	0.05	5.0	0.25	LW Backwash Receiving Tank	50	13.23	3.8	113
HCW Filter B sludge	2.4	30	0.20	5.0	0.99					
HCW Reverse Osmosis Unit Reject	73.0	30	6.00	2.0	12.00					
HCW Filter A sludge (charcoal)[b]	1.4	365	1.40	8.0	11.20	Spent Resin Storage Tank B	50	40.00	1.3	456
LCW Demineralizer resin	1.8	365	1.80	8.0	14.40					
HCW Demineralizer resin	1.8	365	1.80	8.0	14.40					
Condensate Demineralizer resin	18.0[a]	30[a]	1.48	8.0	11.84	Spent Resin Storage Tank A	50	11.84	4.2	127

Notes:

(a) Values from ABWR DCD Chapter 11, Section 11.4 Solid Waste Management System Table 11.4-1 for CUW F/D, .

(b) Spent charcoal from HCW Filter A is normally sent to a container.

(c) The holdup time for each storage tank meets the storage requirements in BTP ETSB 11.3, Part B.III.1.

Table 11.4-6 Projected Six months Storage Area in the Radwaste Building

Solid Waste	Volume Generated (m^3/yr)[a]	Volume Generated (m^3/ 6 months)	Radwaste Container Type and Max Weight	Diameter of Outside Radwaste Container (m)	Radwaste Container Usable Volume (m^3)	Quantity of Containers (6 months)	10% Container Increase for Filling Inefficiency (6 months)	Footprint Area needed (m^2)	Adjusted Footprint Area for 2-High Stacking (m^2)	20% Increase Footprint Area for Passage Ways (m^2)	Maximum Weight of Filled Containers (kg)
CUW F/D sludge	4.7	2.35	HIC (20,000 lbs)	1.9	5.13	1	1.1	4.05	4.05	4.85	9979
FPC F/C sludge	1.8	0.90	HIC (20,000 lbs)	1.9	5.13	1	1.1	4.05	4.05	4.85	9979
Condensate Filter sludge	4.6	2.30	HIC (20,000 lbs)	1.9	5.13	1	1.1	4.05	4.05	4.85	9979
LCW Filter B sludge	0.6	0.30	HIC (20,000 lbs)	1.9	5.13	1	1.1	4.05	4.05	4.85	9979
HCW Filter B sludge	2.4	1.20	HIC (20,000 lbs)	1.9	5.13	1	1.1	4.05	4.05	4.85	9979
HCW Reverse Osmosis Unit Reject	73.0	36.50	HIC (20,000 lbs)	1.9	5.13	8	8.8	32.36	32.36	38.84	79832
Total (Rounded Up)						**13**	**15**	**53.00**	**53.00**	**64.00**	**129727**
HCW Filter A sludge (Charcoal)	1.4	0.70	HIC (20,000 lbs)	1.9	5.13	1	1.1	4.05	4.05	4.85	9979
LCW Demineralizer resin	1.8	0.90	HIC (20,000 lbs)	1.9	5.13	1	1.1	4.05	4.05	4.85	9979
HCW Demineralizer resin	1.8	0.90	HIC (20,000 lbs)	1.9	5.13	1	1.1	4.05	4.05	4.85	9979
Condensate Demineralizer resin	18.0	9.00	HIC (20,000 lbs)	1.9	5.13	2	2.2	8.09	8.09	9.71	19958
Total (Rounded Up)						**5**	**6**	**21.00**	**21.00**	**25.00**	**49895**

Table 11.4-6 Projected Six months Storage Area in the Radwaste Building

Solid Waste	Volume Generated (m^3/yr)[a]	Volume Generated (m^3/ 6 months)	Radwaste Container Type and Max Weight	Diameter of Outside Radwaste Container (m)	Radwaste Container Usable Volume (m^3)	Quantity of Containers (6 months)	10% Container Increase for Filling Inefficiency (6 months)	Footprint Area needed (m^2)	Adjusted Footprint Area for 2-High Stacking (m^2)	20% Increase Footprint Area for Passage Ways (m^2)	Maximum Weight of Filled Containers (kg)
Dry Solid Waste											
Dry Combustible waste	225.0	112.50	Drum (882 lbs)	0.6096	0.2209	510	561	208.47	104.24	125.08	224438
Dry Compactible waste	38.0	19.00	Drum (882 lbs)	0.6096	0.2209	87	95.7	35.56	17.78	21.34	38287
Total (Rounded Up)						**597**	**657**	**245.00**	**123.00**	**147.00**	**262725**
Other Dry waste	100.0	50.00	B-25 Box (10735 lbs)	1.8288 x 1.1684[b]	2.5485	20	22	47.01	23.50	28.21	107125
Total (Rounded Up)						**20**	**22**	**48.00**	**24.00**	**29.00**	**107125**
									Grand Total	**265.00**	**5.49E+05**

(a) Values from ABWR DCD Chapter 11, Section 11.4 Solid Waste Management System Tables 11.4-1 and 11.4-2 and Attachment C.

(b) Base length and width dimensions for B-25 Box.

11.5 Process and Effluent Radiological Monitoring and Sampling Systems

The information in this section of the reference ABWR DCD, including all subsections and tables, is incorporated by reference with the following departures and supplements.

STD DEP T1 2.3-1

STD DEP T1 3.4-1

STD DEP 7.1-1 (Table 11.5-1)

STD DEP 11.5-1 (replaced Table 11.5-1, Table 11.5-2, and Table 11.5-3; revised Table 11.5-7)

11.5.1.1.1 Radiation Monitors Required for Safety and Protection

STD DEP T1 2.3-1

The Process Radiation Monitoring System provides the following design objectives:

(1) ~~*Main steamline tunnel area radiation monitoring*~~ (Not Used)

11.5.1.1.2 Radiation Monitors Required for Plant Operation

STD DEP T1 2.3-1

STD DEP 11.5-1

The Process Radiation Monitoring System also provides the following design objectives:

(1) Monitors Gaseous Effluent Streams

(f) ~~*Incinerator stack discharge*~~ (Not Used)

(g) Main steamline tunnel area radiation monitoring

The Service Building HVAC system contains radiation monitors to monitor radioactivity in the supply air inlet. Functioning of these monitors is described in Subsection 9.4.8.

11.5.1.2.2 Radiation Monitors Required for Plant Operation

STD DEP 7.1-1

The radiation subsystem that monitors liquid discharges from the radwaste treatment system shall have provisions to alarm and initiate automatic closure of the waste discharge valve on the affected treatment system prior to exceeding the normal operation limits specified in ~~*technical specifications*~~ the Offsite Dose Calculation Manual *as required by Regulatory Guide 1.21.*

11.5.2.1.1 Main Steamline (MSL) Radiation Monitoring

STD DEP T1 2.3-1

This departure changes Main Steamline Radiation Monitors from safety to non-safety. Therefore, this section has been moved to Subsection 11.5.2.2.12.

11.5.2.1.2 Reactor Building HVAC Radiation Monitoring

STD DEP 11.5-1

The system consists of four redundant instrument channels. Each channel consists of a ~~digital gamma-sensitive GM~~ detector and a ~~control room~~ radiation monitor. Power is supplied to channels A, B, C, and D monitors from vital 120 VAC Divisions 1, 2, 3 and 4, respectively. ~~A two-pen recorder powered from the 120 VAC instrument bus allows the output of any two channels to be recorded by the use of selection switches.~~

Each radiation monitor has ~~four~~ three *trip circuits: two upscale ~~one downscale and one inoperative similar to MSL radiation monitors~~* and one downscale/inoperative.

A high-high~~, inoperative~~ or ~~a downscale~~ downscale/inoperative *trip in the radiation monitor results in a channel trip which is provided to LDS. Any two-out-of-four channel trips will result in the initiation by LDS of the Standby Gas Treatment System (SGTS) and in the isolation of the secondary containment (including closure of the containment purge and vent valves and closure of the Reactor Building ventilating exhaust isolation valves).*

Each radiation monitor will display the measured radiation level in ~~mGy/h~~ mSv/h.

11.5.2.1.3 Fuel Handling Area Ventilation Exhaust Radiation

STD DEP 11.5-1

This subsystem monitors the radiation level in the fuel handling area ventilation exhaust duct. The system consists of four channels which are physically and electrically independent of each other. Each channel consists of a ~~digital gamma-sensitive GM~~ detector and a ~~control room~~ radiation monitor. Power for channels A, B, C, and D is supplied from the vital 120 VAC Divisions 1, 2, 3 and 4, respectively.

Each radiation monitor has ~~four~~ three *trip circuits: two upscale ~~one downscale and one inoperative similar to the MSL radiation monitors~~* and one downscale/inoperative. *This subsystem performs the same trip functions as those described in Subsection 11.5.2.1.2 for the Reactor Building HVAC ~~exhaust~~ radiation monitoring.*

11.5.2.1.4 Control Building HVAC Radiation Monitoring

STD DEP 11.5-1

The Control Building HVAC Radiation Monitoring Subsystem is provided to detect the radiation level in the normal outdoor air supply, automatically closes the outdoor air intake and the exhaust dampers, and initiates automatically the emergency air filtration

system. The emergency air filtration system fans shall be started and area exhaust fans stopped on high radiation.

Each radiation channel consists of a ~~digital gamma-sensitive GM~~ detector and ~~a~~ radiation monitor ~~which is located in the control room~~.

Each radiation monitor has ~~four~~ three trip circuits: two upscale *~~one inoperative and one downscale~~* and one downscale/inoperative. *All trips are displayed on the appropriate radiation monitor and each actuates a control room annunciator.*

11.5.2.1.5 Drywell Sumps Discharge Radiation Monitoring

STD DEP 11.5-1

This subsystem monitors the radiation level in the liquid waste transferred in the drain line from the drywell LCW and HCW sumps to the Radwaste System. One monitoring channel is provided in each sump drain line. Each ~~channel uses an ionization chamber which~~ detector *is located on the drain line from the sump just downstream from the outboard isolation valve. The output from each ~~sensor~~* detector *is fed to a radiation monitor ~~in the control room~~ for display, recording and annunciation.*

11.5.2.2.1 Offgas Pre-Treatment Radiation Monitoring

STD DEP 11.5-1

A continuous sample is extracted from the offgas pipe via a stainless steel sample line. It is then passed through a sample chamber and a sample panel before being returned to the suction side of the steam jet air ejector (SJAE). The sample chamber is a stainless steel pipe which is internally polished to minimize plateout. It can be purged with room air to check detector response to background radiation by using a three-way solenoid-operated valve. The valve is controlled by a switch located in the main control room. The sample panel measures and indicates sample line flow. A ~~digital gamma-sensitive GM~~ detector is positioned adjacent to the vertical sample chamber and is connected to radiation monitors ~~in the main control room~~ which then send the data to the main control room to display.

The radiation monitor has ~~four~~ three *trip circuits: two upscale (high-high and high), ~~one downscale and one inoperative~~* and one downscale/inoperative.

11.5.2.2.2 Offgas Post-Treatment Radiation Monitoring

STD DEP 7.1-1

STD DEP 11.5-1

This subsystem monitors radioactivity in the offgas piping downstream of the offgas system charcoal ~~absorbers~~ adsorbers and upstream of the offgas system discharge valve. A continuous sample is extracted from the Offgas System piping, passed through the offgas post-treatment sample panel for monitoring and sampling, and returned to the Offgas System piping. The sample panel has a pair of filters (one for

particulate collection and one for halogen collection) in parallel (with respect to flow) with two ~~identical GM~~ detectors. Two radiation monitors ~~in the main control room~~ analyze ~~and~~ the data and then send the data to the main control room to *visually display the measured gross radiation level*.

Each radiation monitor has four *trip circuits: ~~that indicate~~* three upscale (*high-high-high, high-high, high*)*, and* one *downscale/inoperative. ~~Each trip is visually displayed on the radiation monitor~~*. Each trip is determined by the radiation monitor and then sent for visual display to the main control room. *The trips actuate corresponding main control room annunciators: offgas post-treatment high-high-high radiation, offgas post-treatment high-high radiation, and offgas post-treatment high and downscale/inoperative monitor.*

High or low flow measured at the sample panel actuates an annunciator in the control room to indicate abnormal flow.

The high-high-high and downscale trip/inoperative outputs initiate closure of the offgas system discharge ~~and bypass valves~~ valve. *The high-high-high trip setpoint is ~~determined so that valve closure is initiated prior to exceeding technical specification limit. Any one high-high channel trip initiates alignment of the Offgas System flow valves to achieve treatment through the charcoal vault~~.* provided in the Offsite Dose Calculation Manual. Any one ~~*High*~~High-High channel trip from the gaseous channels closes the offgas bypass valve.

11.5.2.2.3 Charcoal Vault Radiation Monitoring

STD DEP 11.5-1

The charcoal vault is monitored for gross gamma radiation level with a single instrument channel. The channel includes a ~~digital sensor and converter~~‘sta*, and a radiation monitor. The ~~sensor~~*detector *is located outside the vault on the HVAC exhaust line from the vault. The radiation monitor ~~is located in the main control room~~* analyzes the data and then sends the data for visual display to the main control room. *The channel provides for sensing and readout of gross gamma radiation over a range of six logarithmic decades ~~(0.01 to 10^4 mGy/h)~~*.

The monitor has ~~one adjustable~~ two trip circuits: one *upscale trip circuit ~~for alarm~~ and one ~~downscale~~* downscale/inoperative *trip ~~for instrument trouble~~.* The trip outputs are alarmed in the main control room. *Power to the monitor is supplied from 120 VAC vital non-1E bus.*

11.5.2.2.4 Plant Stack Discharge Radiation Monitoring

STD DEP 11.5-1

A representative sample is continuously extracted from the ventilation ducting through an isokinetic probe in accordance with ANSI N13.1 and passed through the stack ventilation sample panels for monitoring and sampling, and returned to the ventilation ducting. Each sample panel has a pair of filters (one for particulate collection and one

for halogen collection) in parallel (with respect to flow) for continuous gaseous radiation sampling. The radiation detector assembly consists of a shielded gas chamber that houses a ~~scintillation~~ detector and a check source. The extended range detector assembly consists of ~~an ionization~~ a chamber which measures radiation levels up to ~~3700~~ 3.7×10^3 MBq/cm^3. A radiation monitor ~~in the main control room~~ analyzes ~~and visually displays~~ the data and then sends it to the main control room to display the measured radiation level. These sensors are qualified to operate under accident conditions.

The radiation monitor ~~initiates~~ ~~trips~~ has three trip circuits: ~~for alarm indications on~~ two upscale (high-high, high), and one ~~low~~ downscale/inoperative radiation from each detector assembly. These trip outputs are alarmed in the main control room. Also, the sampled line is monitored for high or low flow indications and alarming.

11.5.2.2.5 Radwaste Liquid Discharge Radiation Monitoring

STD DEP 11.5-1

Liquid waste can be discharged from the sample tanks containing liquids that have been processed through one or more treatment systems such as evaporation, filtration, and/or ion exchange. During the discharge, the liquid is extracted from the liquid drain treatment process pipe, passed through a liquid sample panel which contains a detection assembly for gross radiation monitoring, and returned to the process pipe. The detection assembly consists of a ~~scintillation~~ detector mounted in a shielded sample chamber equipped with a check source. A radiation monitor ~~in the control room~~ analyzes and transmits the measured gross radiation level to the main control room for visual display. ~~and visually displays the measured gross radiation level.~~

11.5.2.2.6 Reactor Building Cooling Water Radiation Monitoring

STD DEP T1 3.4-1

STD DEP 11.5-1

Each channel consists of a ~~scintillation~~ detector which is located in a well near the RCW heat exchanger exit pipe. ~~Radiation detected from the three channels is multiplexed and fed into a common radiation monitor.~~ The output signal from each detector is sent to a separate radiation monitor. This monitor provides ~~individual channel trips~~ two trip circuits: one upscale ~~on high~~ (high) ~~radiation level~~ and one downscale/inoperative indication for annunciation in the control room. Power to the monitors is provided from the non-1E vital 120 VAC source.

11.5.2.2.8 Turbine Building Ventilation Exhaust Monitoring

STD DEP T1 3.4-1

STD DEP 11.5-1

This subsystem monitors the vent discharge in the Turbine Building for gross radiation levels. This includes the discharge from the mechanical vacuum pump. The monitoring is provided by four channels (two redundant sets). Two redundant channels monitor radiation in the compartment area air exhaust duct and the other two redundant channels monitor the radiation in the ventilation system air exhaust from the clean area. Each channel uses a ~~digital~~ detector located adjacent to the monitored exhaust duct. ~~The outputs from each set of detectors are multiplexed and then fed into two separate radiation monitors for display, recording and annunciation~~. The output signal from each detector is processed by a separate radiation monitor and then transmitted to the main control room for alarm and display*. Each monitor provides ~~alarm trips on radiation high~~* two trip circuits: one upscale (high) *and* one *~~on radiation low (one downscale/inoperative)~~.*

11.5.2.2.9 Turbine Gland Seal Condenser Exhaust Discharge Monitoring

STD DEP T1 3.4-1

STD DEP 11.5-1

This subsystem monitors the offgas releases to the stack from the turbine gland seal system. The offgas releases are continuously sampled and monitored for noble gases by a ~~scintillation~~ detector. ~~The output signal is multiplexed and then fed to a shared radiation monitor in the main control for display, recording and annunciation~~ The output signal from each detector is processed by a separate radiation monitor and then transmitted to the main control room for alarm and display*. This monitor provides ~~two~~* three *trip ~~alarms~~* circuits: two upscale, (high-high*, ~~one on radiation~~, high) and one on radiation low (downscale/inoperative)*.

11.5.2.2.10 Standby Gas Treatment System Radiation Monitoring

STD DEP 11.5-1

Two ~~ionization chamber~~ detectors are physically located downstream of the exhaust fans on the exhaust duct to the stack and are utilized to monitor the high levels of radioactivity expected under accident conditions. Two other ~~scintillation~~ detectors are used during offgas sampling of the gas exhaust to the stack to monitor the normal level of radioactivity expected during normal plant operation.

The subsystem consists of four instrumented channels. Each channel consists of a detector and a ~~main control room~~ radiation monitor.

Each radiation monitor has ~~four~~ three *trip circuits: two upscale* (high-high and high)*, ~~one inoperative~~ and one ~~downscale~~* downscale/inoperative*. All trips are displayed on the appropriate radiation monitor and each actuates a main control room annunciator for high-high, high and ~~low~~*downscale*/inoperative indications.*

11.5.2.2.11 ~~*Incinerator Stack Discharge Radiation Monitoring*~~ (Not Used)

STD DEP 11.5-1

~~*This subsystem monitors the radioactivity in the discharge from the incinerator stack during burning of low radioactive waste. A representative sample from the discharge path is drawn through an isokinetic probe and routed to a local sample panel in the Radwaste Building for monitoring and particle collection. The sample panel houses the radiation detector assembly, a pair of filters for collection of airborne particulates and halogens, the vacuum pumps and associated plumbing, and a gamma check source for testing operability of the radiation channel. Also, the sample panel includes provisions for purging from the Radwaste Building control room.*~~

~~*The local sample panel and the radiation monitor are powered from 120 VAC instrument power.*~~

~~*The radiation monitor initiates trips on high and high-high levels and on downscale/inoperative indication. These trips are alarmed in the Radwaste Building control room. On high-high trip, the incinerator exhaust fans are shutdown to terminate any further discharge from the stack.*~~

11.5.2.2.12 Main Steamline (MSL) Radiation Monitoring

STD DEP T1 2.3-1

STD DEP 11.5-1

This subsystem monitors the gamma radiation level of the steam transported by the main steamlines in the MSL tunnel. The normal radiation level is produced primarily by coolant activation gases plus smaller quantities of fission gases being transported with the steam. ~~*In the event of a gross release of fission products from the core, the monitoring channels provide trip signals to the Leak Detection and Isolation System.*~~

The MSL radiation monitors consist of four redundant instrument channels. Each channel consists of a local detector ~~*(ion chamber)*~~ *and a control room radiation monitor.* ~~*Power for channels A, B, C, and D monitors is supplied from vital 120 VAC divisions 1, 2, 3 and 4, respectively. All four channels are physically and electrically independent of each other.*~~

The detectors are physically located near the main steamlines (MSL) just downstream of the outboard MSIVs in the steam tunnel. The detectors are geometrically arranged and are capable of detecting significant increases in radiation level with any number of main steamlines in operation. Table 11.5-1 lists the location and range of the detectors.

Each radiation monitor hasT ~~*four*~~three *trip circuits: two upscale (high-high and high),* and *one* ~~*downscale (low), and one inoperative*~~*downscale/inoperative. Each trip is visually displayed on the affected radiation monitor.* ~~*A high-high or inoperative trip in the radiation monitor results in a channel trip which is provided to the Reactor Protection System (RPS) and to the Leak Detection and Isolation System (LDS).*~~ *Any two-out-of-four channel trip results in* ~~*initiation of MSIV closure, reactor scram,*~~ *main*

condenser mechanical vacuum pump (MVP) shutdown, and MVP line discharge valve closure. High ~~and low~~ trips do not result in a channel trip. Each radiation monitor displays the measured radiation level in ~~mGy/h~~ mSv/h*. All channel trips are annunciated in the main control room.*

11.5.3 Effluent Monitoring and Sampling

11.5.3.4 Setpoints

STD DEP 7.1-1

*The trip setpoints that initiate automatic isolation functions are ~~specified in the plant Technical Specifications Instrument Setpoint Summary Report as indicated in Table 11.5-1.~~*based on calculations developed in accordance with controlled plant procedures or, if pertaining to gaseous or liquid releases within the scope of the Offsite Dose Calculation Manual (ODCM), in accordance with the ODCM.

11.5.4.3 Implementation of General Design Criterion 64

STD DEP 11.5-1

Radiation levels in radioactive and potentially radioactive process streams are monitored for radioactivity releases. These include:

(3) ~~Carbon~~ Charcoal *vault vent*

~~(5) Incinerator stack discharge~~

11.5.5.1 Inspection and Tests

STD DEP 11.5-1

The following monitors have alarm trip circuits which can be tested by using test signals or portable gamma sources:

(9) ~~Carbon vault vent~~ Charcoal vault *exhaust*

The following monitors include built-in check sources and purge systems which can be operated from the main control room:

~~(7) Incinerator stack discharge~~

11.5.5.2 Calibration

STD DEP 11.5-1

Calibration of radiation monitors is performed using certified commercial radionuclide sources traceable to the National Institute of Standards and Technology. ~~The overall reproducibility of calibration is limited to ±15%. The source-detector geometry during primary calibration will be mechanically precise enough to ensure that positioning errors of either instruments or radiation sources do not affect the calibration accuracy by more than ±3%.~~ Each continuous monitor is calibrated during plant operation or

during the refueling outage if the detector is not ~~readily~~ accessible during power operation. ~~*Calibration can also be performed on the applicable instrument by using liquid or gaseous radionuclide standards or by analyzing particulate iodine or gaseous grab samples with laboratory instruments.*~~

~~*The following monitors display the gross gamma signal in counts/min:*~~

~~*(1) Offgas post-treatment*~~

~~*(2) Plant stack discharge (low to normal levels)*~~

~~*(3) Radwaste liquid discharge*~~

~~*(4) SGTS offgas discharge (low to normal levels)*~~

~~*(5) Reactor Building cooling water intersystem leakage*~~

~~*(6) Radwaste Building ventilation exhaust*~~

~~*(7) Main turbine gland seal condenser offgas exhaust*~~

~~*(8) Incinerator stack discharge*~~

~~*The following monitors are calibrated to provide measurements of the gross gamma dose rate in mGy/h:*~~

~~*(1) Main steamline tunnel area*~~

~~*(2) Reactor Building ventilation exhaust*~~

~~*(3) Fuel handling area ventilation exhaust*~~

~~*(4) Charcoal vault vent exhaust*~~

~~*(5) Control Building air intake supply*~~

~~*(6) Turbine Building ventilation exhaust*~~

~~*(7) SGTS offgas discharge (high level)*~~

~~*(8) Offgas pre-treatment*~~

~~*(9) Drywell sump liquid discharge*~~

~~*(10) Plant stack discharge (high level)*~~

11.5.5.3 Maintenance

STD DEP 11.5-1

All channel detectors and *electronics~~, and recorders~~ are serviced and maintained on ~~an annual~~* a periodic *basis or in accordance with manufacturers' recommendations to ensure reliable operations. ~~Such maintenance includes cleaning, lubrication and assurance of free movement of the recorder in addition to the replacement or adjustment of any components required after performing a test or calibration check~~* For sampling systems, skids are designed in order to allow periodic maintenance and cleaning*. If any work is performed which would affect the calibration, a recalibration is performed at the completion of the work.*

11.5.6 COL License Information

11.5.6.1 Calculation of Radiation Release Rates

The following site-specific supplement addresses COL License Information Item 11.4.

The Offsite Dose Calculation Manual (ODCM) contains the methodology and parameters used for calculation of offsite doses resulting from gaseous and liquid effluents. The ODCM addresses the methods for the conversion of the radiation measurements of gaseous discharge from the main plant stack into release rates.

11.5.6.2 Compliance with the Regulatory Shielding Design Basis

The following site-specific supplement addresses COL License Information Item 11.5.

The operations of the sampling systems for Standby Gas Treatment and main stack effluent monitoring will be implemented by operation and maintenance procedures. The design will, as demonstrated in shielding calculations, comply with the shielding requirements for accident conditions, as stipulated in NUREG-0737, Item II.F.1, clarification 2 of Attachment 2. Equipment design or procurement specifications will contain the necessary shielding requirements. (COM 11.5-1)

11.5.6.3 Provisions for Isokinetic Sampling

The following site-specific supplement addresses COL License Information Item 11.6.

Procedures will be developed prior to fuel load, ~~*consistent with ABWR Licensing Topical Report NEDO NEDO-33297, dated January 2007, "Advanced Boiling Water Reactor (ABWR) Procedures Development Plan,"*~~in accordance with the plant operating procedure development plan in Section 13.5 to include the collection techniques used to extract representative samples of radioactive iodines and particulates. Collecting and sampling procedures will require isokinetic conditions within 20% of the flow rate are maintained to assure that a representative sample from the effluent stream is taken as stipulated in NUREG-0737, Item II.F.1, clarification 3 of Attachment 2. (COM 11.5-2)

11.5.6.4 Sampling of Radioactive Iodines and Particulates

The following site-specific supplement addresses COL License Information Item 11.7.

Procedures will be developed prior to fuel load, ~~*consistent with ABWR Licensing Topical Report NEDO NEDO-33297, dated January 2007, "Advanced Boiling Water Reactor (ABWR) Procedures Development Plan,"*~~in accordance with the plant operating procedure development plan in Section 13.5 to include the collection techniques used to extract representative samples of radioactive iodines and particulates to be used following an accident to quantify releases for dose calculations and assessment as stipulated in NUREG-0737, Item II.F.1-2. (COM 11.5-3)

11.5.6.5 Calibration Frequencies and Techniques

The following site-specific supplement addresses COL License Information Item 11.8.

Procedures will be developed prior to fuel load, ~~*consistent with ABWR Licensing Topical Report NEDO NEDO-33297, dated January 2007, "Advanced Boiling Water Reactor (ABWR) Procedures Development Plan,"*~~in accordance with the plant operating procedure development plan in Section 13.5 to specify the calibration frequencies and techniques for the radiation sensors based on equipment data provided by the vendor. (COM 11.5-4)

11.5.7S Additional Information

This subsection supplements the information provided in the reference DCD as discussed in Section C.III.1.11.5 of Regulatory Guide 1.206.

The ODCM for STP 3 & 4 will incorporate NEI 07.09A (Revision 0), "Generic FSAR Template Guidance for Offsite Dose Calculation Manual (ODCM) Program Description," March 2009.

The effluent radiation monitors provide the means to control releases of radioactive material to the environment to maintain the releases ALARA in accordance with Appendix I to 10 CFR Part 50. Compliance with the numerical guidance provided in Appendix I to 10 CFR 50 is discussed in Section 12.2.2.4. The cost benefit analyses for augments to the liquid and gaseous waste management systems, as required by Appendix I to 10 CFR 50, are discussed in Sections 11.2.1.2 and 11.3.11.1.

The Radiological Environmental Monitoring Program (REMP) for STP 3 & 4 is expected to be integrated with that of STP 1 & 2 as part of the ODCM and is consistent with Regulatory Guide 4.15, "Quality Assurance for Radiological Monitoring Programs (Normal Operation)–Effluent Streams and the Environment." Quality assurance is provided in the existing NRC-approved REMP through accredited training programs and personnel qualification programs, a measurement assurance program that includes Inter-laboratory Comparison Program tests, and administrative and technical procedures governing the monitoring and analyses program for all activities, including computational checks.

Control checks and tests are applied to the analytical operations by means of duplicate and/or split analyses of selected samples, and by the introduction of environmental samples with known nuclide concentrations. Calibrations are confirmed by participation in the Nuclear Energy Institute/National Institute of Standards and Technology Measurement Assurance Program.

Table 11.5-1 Process and Effluent Radiation Monitoring Systems

Monitored Process††	No. of Channels	Sample Line or Detector Location	Channel Range*	Setpoint ACF Trip	Setpoint Scale
A. Safety-Related Monitors					
~~*Main steamline tunnel area*~~	~~*4*~~	~~*Immediately down- stream of plant main steamline isolation valve*~~	~~*$1E^{-2}$ to $1E^{4}$ mSv/h*~~	~~*Instrument Setpoint Summary Report*~~	~~*6 dec. log*~~
Reactor Building vent exhaust	4	Exhaust duct upstream of exhaust ventilation isolation valve	$1E^{-4}$ to 1 mSv/h	~~*Instrument Setpoint Summary Report*~~Offsite Dose Calculation Manual	4 dec. log
Control Building air intake	8†	Intake duct upstream of intake ventilation isolation valve	$1E^{-4}$ to 1 mSv/h	~~*Instrument Setpoint Summary Report*~~Based on setpoint calculation	4 dec. log
Drywell sump discharge	2	Drain line from LCW & HCW sumps	$1E^{-2}$ to $1E^{4}$ mSv/h	~~*Instrument Setpoint Summary Report*~~Based on setpoint calculation	6 dec. log
Fuel handling area air vent exhaust	4	Locally above operating floor	10^{-3} to 10 mSv/h	~~*Instrument Setpoint Summary Report*~~Offsite Dose Calculation Manual	4 dec. log

ACF = Automatic Control Function~~;~~

Table 11.5-1 Process and Effluent Radiation Monitoring Systems (Continued)

Monitored Process††	No. of Channels	Sample Line or Detector Location	Channel Range*	Setpoint ACF Trip	Setpoint Scale
B. Monitors Required for Plant Operation					
Main steamline tunnel area	4	Immediately down- stream of plant main steamline isolation valve	1E-~~2~~ to 1E4 mSv/h	Based on setpoint calculation	6 dec. log
Radwaste liquid discharge	1	Sample line	10^{-1} to 10^{4} cpm	~~*Instrument Setpoint Summary Report*~~Offsite Dose Calculation Manual	5 dec. log
Reactor Building cooling water system	3	RCW Hx line exit	10^{-1} to 10^{4} cpm	None	5 dec. log
Offgas post- treatment	2	Sample line	10 to 10^{6} cpm	Offsite Dose Calculation Manual	5 dec. log
Offgas pre-treatment	1	Sample line	1E-~~2~~ -2 to 1E4 mSv/h	None	6 dec. log
Charcoal vault vent	1	On charcoal vault HVAC exhaust line	1E-~~2~~ -2 to 1E4 mSv/h	None	6 dec. log
Plant stack discharge	2**	Sample line	10 to 10^{6} cpm	None	5 dec. log
		~~*Sample line*~~	10^{-13} to 10^{-6} Amps (1E-$^{-2}$ to 1E^{4} mSv/h)	None	6 dec. log
Radwaste Building exhaust vent	1	Exhaust ducts	10 to 10^{6} cpm	None	5 dec. log
Turbine Building vent exhaust	4	Exhaust duct	1E-$^{-4}$ to 1 mSv/h	None	4 dec. log

ACF = Automatic Control Function~~;~~

Table 11.5-1 Process and Effluent Radiation Monitoring Systems (Continued)

Monitored Process††	No. of Channels	Sample Line or Detector Location	Channel Range*	Setpoint ACF Trip	Setpoint Scale
B. Monitors Required for Plant Operation (Continued)					
Standby Gas Treatment System offgas	2**	SGTS exhaust air duct downstream of exhaust fans	1 to 10^6 cpm	None	6 dec. log
			10^{-13} to 10^{-6} Amps (1E-~~2~~ -2 to 1E^4 mSv/h)	None	6 dec. log
Turbine gland seal condenser offgas	1	Sample line	1 to 10^6 cpm	None	6 dec. log

ACF = Automatic Control Function~~;~~

* The channel range specified in this table is the equipment measuring or display range of the indicated parameter. Refer to Tables 11.5-2 and 11.5-3 for the dynamic detection range of the monitoring channel expressed as concentration in units of megabecquerels per cubic centimeter, referenced to a specific nuclide. These channel ranges are estimated based on existing plants.

† 4 Channels for each air intake

†† The alarms and indication for these radiation detectors are displayed locally and in the main control room.

** One each of two different detector types is required to cover the range.

Table 11.5-2 Process Radiation Monitoring System (Gaseous and Airborne Monitors)

Radiation Monitor	Configuration	Dynamic Detection Range*	Principal Radionuclides Measured	Expected Activity†	Alarms and Trips
Offgas post-treatment	Offline	3.7×10^{-5} to 3.7 MBq/cm^3	Xe-133‡ Cs-137 I-131	1.1×10^{-3} MBq/cm^3	Flow H/L DNSC/INOP High High-High HIgh-High-High
Offgas pre-treatment	Adjacent to sample chamber	3.7×10^{-5} to 3.7×10^{2} MBq/cm^3	Noble gases fission products	~1.1×10^{-2} MBq/cm^3	High-High High DNSC/INOP Flow H/L
Main steamline tunnel area	Adjacent to steamlines	1.0×10^{-2} mSv/h to 1.0×10^{4} mSv/h	Coolant activation gases	~1 mSv/h	High-High High DNSC/INOP ~~INOP~~
Charcoal vault	Inline	3.7×10^{-5} to 37 MBq/cm^3	Noble gases	Negligible	High ~~Low/INOP~~
T/B vent exhaust	Inline	3.7×10^{-7} to 3.7×10^{-3} MBq/cm^3	Xe-133‡ Xe-135	~1.48×10^{-6} MBq/cm^3	High DNSC/INOP
Reactor Building vent exhaust	Inline	3.7×10^{-7} to 3.7×10^{-3} MBq/cm^3	Noble gases Xe-133‡ Xe-135	~1.48×10^{-6} MBq/cm^3	High-High High DNSC/INOP
Plant stack discharge (normal range)	Offline	3.7×10^{-9} to 3.7×10^{-3} MBq/cm^3	Xe-133‡ Cs-137 I-131	~1.85×10^{-6} MBq/cm^3	High-High High DNSC/INOP Flow H/L
Plant stack (high-range)	Offline	3.7×10^{-4} to 3.7×10^{3} MBq/cm^3‡	Xe-133‡	~1.85x10E-~~6~~ -6 MBq/cm^3	Flow H/L DNSC/INOP High High-High

Table 11.5-2 Process Radiation Monitoring System (Gaseous and Airborne Monitors) (Continued)

Radiation Monitor	Configuration	Dynamic Detection Range*	Principal Radionuclides Measured	Expected Activity†	Alarms and Trips
Radwaste Building ventilation exhaust	Offline	3.7×10^{-9} to 3.7×10^{-3} MBq/cm^3	Xe-133‡ Cs-137 I-131	~3.7×10^{-7} MBq/cm^3	High-High High DNSC/INOP Flow H/L
Gland seal condenser exhaust discharge	Offline	3.7×10^{-9} to 3.7×10^{-3} MBq/cm^3	Xe-133 Cs-137‡ I-131	~3.7×10^{-8} MBq/cm^3	High-High High DNSC/INOP Flow H/L
Control Bldg. HVAC air intake	Inline	3.7×10^{-7} to 3.7×10^{-3} MBq/cm^3	Xe-133†	Negligible	High-High High DNSC/INOP
Standby Gas Treatment System exhaust	Offline	3.7×10^{-9} to 3.7×10^{-3} MBq/cm^3	Noble gases Cs-137‡ I-131	~1.85×10^{-8} MBq/cm^3	High-High High DNSC/INOP Flow H/L
	Inline	3.7×10^{-4} to 3.7×10^{3} MBq/cm^3‡	Noble gases	~1.85×10^{-8} MBq/cm^3	High-High High DNSC/INOP
Fuel handling area exhaust	Inline	3.7×10^{-5} to 3.7×10^{-1} MBq/cm^3	Noble gases	~2.22×10^{-4} MBq/cm^3	High-High High DNSC/INOP

* Dynamic Detection Range is calculated based on the radionuclides and the sensitivity of the radiation monitor to the radionuclides. As this calculation is based on vendor supplied info (sensitivity of the monitor), these values are estimated.

† Expected activities are estimated and are based on existing plants.

‡ Sensitivity based upon this radionuclide.

Table 11.5-3 Process Radiation Monitoring System (Liquid Monitors)

Radiation Monitor	Configuration	Dynamic Detection Range*	Principal Radionuclides Measured	Expected Activity†	Alarms & Trips
Radwaste liquid discharge	Offline	3.7×10^{-9} to 3.7×10^{-4} MBq/cm^3	Cs-137‡ Co-60	~3.7×10^{-8} MBq/cm^3	High/High High DNSC/INOP
Reactor Building cooling water intersystem leakage	Inline	3.7×10^{-7} to 3.7×10^{-2} MBq/cm^3	Cs-137* Co-60	~2.22×10^{-6} MBq/cm^3	High DNSC/INOP
Drywell sump drain liquid discharge	Inline	3.7×10^{-4} to 3.7×10^{2} MBq/cm^3	Gross Gamma Cs-137*	~1.85×10^{-3} MBq/cm^3	High-High High DNSC/INOP

* Dynamic Detection Range is calculated based on the radionuclides and the sensitivity of the radiation monitor to the radionuclides. As this calculation is based on vendor supplied info (sensitivity of the monitor), these values are estimated.

† Expected activities are estimated and are based on existing plants.

‡ Sensitivity based upon this radionuclide.

DNSC—Downscale Indication

INOP—Monitor Inoperative

Table 11.5-7 Radiological Analysis Summary of Gaseous Effluent Samples

Sample Description	Sample Frequency	Analysis	Sensitivity MBq/L	Purpose
~~3. Incinerator stack discharge~~	~~As above~~	~~As above~~	~~As above~~	~~Effluent record~~

11.6 Offsite Radiological Monitoring Program

The existing offsite radiological monitoring program for STP 1 & 2 is described in the STP Offsite Dose Calculation Manual, which has been provided to the NRC and is maintained in accordance with Technical Specifications. The monitoring program for STP 3 & 4 is described in Environmental Report Section 6.2. The current program data provides the preoperational baseline for the new units.

11A Radioactive Waste Management - Additional Information

Appendix 11A of the reference ABWR DCD referenced proprietary information. The information in this appendix and all subsections has been incorporated into Sections 11.2 and 11.4 and is no longer proprietary.

12.0 Radiation Protection

12.1 Ensuring that Occupational Radiation Exposures are ALARA

The information in this section of the reference ABWR DCD, including all subsections, is incorporated by reference with the following site-specific supplements.

12.1.1 Policy Considerations

The management policy, the ALARA policy and the organizational structure related to ensuring that occupational radiation exposures are maintained as low as is reasonably achievable (ALARA) are described in Section 12.5S, "Operational Radiation Protection Program." Implementation of the policy, organization, training and design review guidance will be consistent with Regulatory Guides 1.8, 8.8 and 8.10, as described in Section 12.5S.

12.1.1.2 Operation Policies

The operational policy considerations for ensuring that radiation exposures will be maintained ALARA, including the provisions for continuing ALARA facility design reviews once the plant is operational, are described in Section 12.5S.

12.1.4 COL License Information

12.1.4.1 Regulatory Guide 8.10

The following site-specific supplement addresses COL License Information Item 12.1.

Regulatory Guide 8.8, “Information Relevant to Ensuring that Occupational Radiation Exposures at Nuclear Power Stations Will Be As Low As Is Reasonably Achievable,” and Regulatory Guide 8.10, "Operating Philosophy for Maintaining Occupational Radiation Exposures As Low As is Reasonably Achievable," both deal with the concept of "as low as is reasonably achievable" (ALARA) as it relates to occupational radiation exposures. Regulatory Guide 8.10 describes the general operating philosophy for maintaining occupational exposures to radiation as low as is reasonably achievable. Regulatory Guide 8.8 describes the information relevant to “as low as is reasonably achievable” that should be included in license applications.

Regulatory Guide 8.10 identifies two basic conditions that are considered necessary for maintaining occupational radiation exposures as far below the specified limits as is reasonably achievable: management commitment and vigilance by the radiation protection staff.

STP 3 & 4 will continue the management commitment and radiation protection practices developed for STP 1 & 2. Section 12.5S further describes the management policies, organizational structure, training, procedures and methods that will be in place for maintaining exposures ALARA.

12.1.4.2 Regulatory Guide 1.8

The following site-specific supplement addresses COL License Information Item 12.2.

Regulatory Guide 1.8, "Qualification and Training of Personnel for Nuclear Power Plants," provides guidance for the selection, qualification and training of personnel at nuclear power plants. The STP 3 & 4 conformance with Regulatory Guide 1.8, as it pertains to the Health Physics organization and the management of the Health Physics organization, is described in Section 12.5S.

12.1.4.3 Occupational Radiation Exposures

The following site-specific supplement addresses COL License Information Item 12.3.

Occupational radiation exposures will be maintained ALARA by means of the Operational Radiation Protection Program described in Section 12.5S. The detailed policies and plans for maintaining occupational radiation exposures ALARA will be consistent with the guidance in Regulatory Guides 8.8 and 8.10. The detailed procedures will be prepared consistent with the guidance in Regulatory Guides 1.8, 8.2, 8.7, 8.8 and 8.10, the guidance referenced in NUREG-1736 that is applicable to power reactors, and the requirements in the QAPD (NEI 06-14).

The operational plans, procedures and policies currently in use at STP 1 & 2 reflect industry experience and guidance. They will be used, in conjunction with the guidance contained in the documents identified above, to develop the policies, plans and procedures for STP 3 & 4. Many of these plans, procedures and policies will be common to all four units.

Section 12.3, "Radiation Protection Design Features" describes the many features that have been designed into the plant, incorporating information from operating plant experience and from other plant designs. The management policy described in Section 12.5S includes the provision to continue to assure that the plant is designed, constructed and operated such that occupational and public radiation exposures and releases are maintained ALARA.

Section 12.5S describes methods that will be factored into procedures for maintaining radiation exposure-related operations such as maintenance, inservice inspection, radwaste handling and refueling ALARA.

STP 3 & 4 will follow the guidance provided in Regulatory Guides 8.2, 8.7, 8.9, 8.13, 8.15, 8.20, 8.25, 8.26, 8.27, 8.28, 8.29, 8.34, 8.35, and 8.38 in carrying out the operational radiation protection program.

12.1.4.4 Regulatory Guide 8.8

The following site-specific supplement addresses COL License Information Item 12.4.

Regulatory Guide 8.8, "Information Relevant to Ensuring that Occupational Radiation Exposures at Nuclear Power Stations Will Be As Low As Is Reasonably Achievable," provides guidance for maintaining the annual dose to individual plant personnel, as

well as, the collective dose to all station personnel ALARA through the design, construction and operation of a nuclear power plant.

STP 3 & 4 has been designed in conformance with Regulatory Guide 8.8 as described in Sections 12.1 and 12.3. Sections 12.1, 12.3, 12.4 and 12.5 provide a description of the ALARA program, the radiation protection program, the design features, and the radiation protection facilities, instrumentation and equipment that will be used to ensure that STP 3 & 4 meet the objectives of Regulatory Guide 8.8 during the construction and operational phases.

12.2 Radiation Sources

The information in this section of the reference ABWR DCD, including all subsections and tables, is incorporated by reference with the following departures and supplements.

STD DEP T1 2.15-1

STD DEP 5.4-1 (Table 12.2-9)

STD DEP 11.2-1(Tables 12.2-5a, 12.2-5b, 12.2-5c, and 12.2-13a through 12.2-13j)

STD DEP 11.4-1 (Tables 12.2-5a, 12.2-5b, 12.2-5c, and 12.2-15a through 12.2-15l)

STD DEP 12.2-1 (Tables 12.2-3b and 12.2-3c)

STD DEP Admin

12.2.1.2.6.2 Radioactive Sources in Liquid Radwaste System

STD DEP 11.2-1

The Liquid Radwaste System is composed of ~~three~~ four subsystems designed to collect, treat and cycle or discharge different categories of waste water (Subsection 11.2.2). The radioactive sources for the components in the systems are provided in Tables 12.2-13a through 12.2-13j. The isotopic inventories in the liquid radwaste components were calculated assuming a fission product release rate from the fuel equivalent to that required to produce 3.7 GBq/s of offgas following a 30-min holdup period.

12.2.1.2.6.2.4 Radioactive Sources in the Solid Radwaste System

STD DEP 11.4-1

The Solid Radwaste System provides the capability for solidifying or packaging waste from the other radwaste systems (Subsection 11.4.2). The wastes ~~are not~~ can be solidified separately by type or source. The final waste is placed in a waste ~~steel~~ container ~~or drums~~. The radioactive sources for the components in the system ~~container and drums~~ are given in Tables 12.2-15a through 12.2-15l.

12.2.1.2.9.6 Other Contained Sources

The following supplementary information is provided:

The radiation sources for installed radiation monitoring system detectors and portable radiation detector calibration activities are expected to be less than 100 millicuries. It is expected that large sources used for radiography at STP 3&4 will be under a license granted by the State of Texas. Other operations that could be expected to utilize a source exceeding 100 millicuries are associated with general dosimetry calibration and the calibration of portable radiation

monitoring equipment utilized by Health Physics personnel. These activities are expected to be performed by the Metrology Laboratory for STP Units 1 & 2.

Procurement, receipt, inventory, labeling, leak testing, control, storage, issuance for use, and disposal of all sources (including sources that contain Special Nuclear Material) maintained on site is in accordance with plant procedures developed to comply with the radiation protection program elements required by 10 CFR Parts 19 and 20, to maintain personnel exposure ALARA. Sources brought to the site and utilized by contract or vendor personnel are controlled in accordance with the provisions of the license held by the contractor or vendor. If required while on site, storage of vendor-supplied sources is in accordance with site procedures.

12.2.1.2.10 Post-accident Radioactive Sources

STD DEP Admin

STD DEP T1 2.15-1

With respect to the Reactor Building, the overall plant design has divided the Reactor Building into three separate and independent divisions. ECCS components are contained in each division in separate isolated rooms such that the failure of one system in one division will not affect components in another division. Releases of radioactive material either in the form of water or steam (airborne) are contained in and isolated to a large extent in the compartment in which it might occur by the use of watertight doors and ~~area~~ process *radiation monitors which isolate the HVAC System from the compartment* on a high radiation signal*. Divisional separation under such conditions is complete. Sumps are designed to detect and alarm in the event of leaks in excess of 0.063 liter per second.~~ establishing a threshold for leak before break on the larger water-carrying piping systems.~~ All connections to the Primary Containment not terminating in the Reactor Building meet GDC 54, 55, 56, and 57. Therefore, in the event of an accident involving radioactive sources in the Primary Containment or Reactor Building, such sources would be contained and isolated for further treatment and decontamination.*

Likewise, potential releases in the Radwaste Building will be contained by ~~isolating~~ filtering *the Radwaste Building atmosphere and sealing any water releases in the building, which is ~~seismically qualified and~~ steel-lined to prevent any potential water releases. Such potential releases are discussed in Section 15.7.*

12.2.1.3 Turbine Building Sources

The following site specific supplement provides information concerning the design of the Condensate Storage Tank (CST).

The CST has a capacity of 2110 m^3 and is located outside in the yard at STP 3&4. Specifically, it is located adjacent to and just north of the Radwaste Building and to the west of the Turbine Building (see Figure 1.2-37 - Plot Plan). It is a right cylinder with a radius of approximately seven meters and a height of approximately 14 meters. It is

located inside an enclosed open top reinforced concrete structure of approximately 19 meters square and 11 meters in height designed to contain the entire contents of the CST. The structure encompasses the CST as depicted on Figure 1.2-37. Outside wall thickness of the concrete structure is approximately 0.3 meters on all four sides. The structure is equipped with a metal cover to preclude rainwater entry, and with a controlled access door.

Normal operational CST contamination levels are expected to yield a contact dose rate of approximately 0.1 mrem/hr, however, the CST will be surveyed by Health Physics personnel periodically and after abnormal operational occurrences (AOO) in accordance with plant procedures to ensure occupational dose remains ALARA. Should an AOO occur which required controlling access to the CST such access would be controlled in accordance with plant Radiation Protection procedures, as described in Section 12.5.

In order to maintain the quality of the CST water, the inputs to the CST are limited. The CST's primary makeup water is purified water from the Makeup Water Purified (MUWP) System. In addition to makeup water from the MUWP System, which contains no radioactive contamination, there are three inputs to the CST that are potentially contaminated. Recycled water from the CRD System is routed back to the CST. The design of the CRD System ensures that the recycle water is not contaminated by other water systems so that the recycled water is the same quality as the CST water. Condensate reject is sent back to the CST to compensate for the clean gland seal steam injection and the thermal expansion of the feed and condensate systems during plant start-up. The point at which condensate is transferred to the CST is located downstream of the condensate filters and demineralizers so that the water that is rejected to the CST has the same quality as the condensate demineralizer effluent. In order to minimize liquid releases from the plant, treated water from the LWMS may also be recycled to the CST.

To establish a design source term, the weighted average of the activity concentrations for each isotope for the condensate reject and the LWMS recycle were cycled through the CST to calculate an equilibrium activity. The condensate reject activity concentration was estimated by taking the reactor water source terms in DCD Section 11.1, except for noble gas and N-16, and adjusting them by the main steam carryover fractions and the condensate filter removal factor of 99% for insoluble nuclides and condensate demineralizer removal parameters from DCD Table 11.1-7. The LWMS recycle activity in the CST is estimated by transferring the activity in the Low Conductivity Waste (LCW) Sample Tanks in COLA Table 12.2-13d to the CST at a rate of 55 m^3/day, which is the normal LCW System influent rate from COLA Table 11.2-2. The transfer was continued for a period of time long enough to ensure that equilibrium concentrations were reached in the 2110 m^3 CST. Tritium activity was assumed to be 3.7E-04 MBq/g in accordance with DCD Section 11.1.2.3. This is conservative because it does not account for the dilution due to the makeup from the MUWP System. The resulting activity concentrations were then multiplied by the volume of the CST, 2110 m^3, to obtain the total activity in the CST. The design source term activity by isotope is shown in Table 12.2-37. The dose rate at 30 cm from the CST containing

this activity is less than 0.001 mSv/hr, and is small enough that no radiation shielding is required.

The CST is provided with design features to prevent environmental releases and the spread of contamination. As stated above, the CST is surrounded by a reinforced concrete enclosure that is sufficient to hold the entire contents of the CST. The drain from the enclosure is routed to the LWMS for processing, if required. The CST is provided with high level alarms in the control room and the Radwaste Building in order to prevent overflow. Any overflow that does occur is routed to the LWMS. The MUWC System contains lines that are used to transfer condensate quality water between the CST and systems in the Radwaste Building, Turbine Building and Reactor Building. All of the piping is routed in trenches or tunnels (not buried pipe). These trenches and tunnels provide the capability to identify and collect any leakage from the lines handling CST water and to transfer this water to the LWMS for processing.

Radiation source information for the CST is shown in Tables 12.2-5a, 12.2-5b, and 12.2-5c.

12.2.2.1 Production of Airborne Sources (Site-Specific Supplemental Value Used)

The following site-specific supplement addresses COL License Information Item 12.5 for airborne releases.

(1) χ/Q values obtained from Table 2.3S-27.

STP has re-performed the gaseous release dose analysis using site-specific parameters to determine conformance with 10 CFR 20 and 10 CFR 50 Appendix I (see Subsection 12.2.3 for COL License Information), concluding that identified limits are not exceeded. As shown in Table 12.2-20 the expected per unit release is a small fraction of the site wide release limits of 10 CFR 20.

12.2.2.4 Average Annual Doses

The following site-specific supplement addresses COL License Information Item 12.5.

For compliance with 10 CFR 50 Appendix I, evaluations have been made to determine average annual doses to unrestricted areas subject to airborne and liquid releases. For airborne dose calculations, isotopic releases were taken from Table 12.2-20. ~~assuming a 0.8 km exclusion boundary.~~ Releases were assumed to be from the plant stack, since all major (Reactor Building, Turbine Building and Radwaste Building) ventilation systems pipe to the stack for normal releases. ~~Since a site meteorology is not definitively defined, a statistical approach was used to evaluate the releases over a series of meteorologies discussed in References 12.26 and 12.27. Doses were calculated using methodologies and conversion factors consistent with Regulatory Guides 1.109 and 1.111 as implemented in References 12.28 and 12.29.~~ Results of the airborne evaluations are given in Table 12.2-21. For the ingestion doses given in Table 12.2-21, ingestion values given in Table E-5 of Regulatory Guide 1.109 were used. ~~COL applicants need to update the airborne dose calculations to conform to the as-designed plant and site-specific meteorology (see Subsection 12.2.3 for COL~~

~~*license information).*~~ Tables 12.2-31, 12.2-32, and 12.2-33 describe the parameters used in the airborne release dose assessment.

12.2.2.5 Liquid Releases

The following site-specific supplement addresses COL License Information Item 12.5 for liquid releases.

The ABWR is designed not to release radioactive liquid effluents. However, under certain conditions of high water inventory, ~~*up to 3.7 GBq per year, excluding tritium*~~ radioactive liquids *may be released as described in Subsection 11.2.3. These releases are given in Table 12.2-22 and form the basis for estimating doses using methodologies consistent with Regulatory Guide 1.113 as implemented in Reference 12.2-10. The results of liquid releases*~~*, assuming dilution factors described in Subsection 11.2.3.2 12.2.2.5.1,*~~ *are shown in the dose evaluation in Table 12.2-23.* ~~*COL applicants need to update*~~ STP has re-performed *the liquid dose analysis* ~~*to conform to the as-designed plant and*~~ using *site-specific parameters* to determine conformance with 10 CFR 20 and 10 CFR 50 Appendix I *(see Subsection 12.2.3 for COL license information),* concluding that the identified limits are not exceeded. Table 12.2-34 describes the site-specific parameters used in the liquid release dose assessment.

12.2.2.5.1 Dilution Factors

The following site-specific supplement addresses COL License Information Item 12.5 for liquid releases.

Dilution factors used in evaluating the release of liquid effluents are site specific. Using the methodology set forth in NUREG-0016 for Liquid Releases, the quantity of radioactive isotopes has been computed and is identified in column 2 of Table 12.2-22. The GALE code methodology, as specified in NUREG-0016, was used to determine the radiological activity released. The code provides recommended values for the activity fraction for potential effluent streams. It is assumed that this quantity is released to the plant discharge piping, which has a flow of 272,550 m^3/h (circulating water flow). A maximum of 150 cubic meters per hour of liquid radwaste discharge will be mixed with normal circulating water flow of 272,550 m^3/h providing significant dilution prior to release. The annual release values are used to calculate the per unit annual average liquid release discharge concentration, shown in column 3 of Table 12.2-22. The concentrations noted in this table are less than the limits in 10 CFR 20.

The discharge piping empties into the STP Main Cooling Reservoir (MCR), a 7000-acre reservoir. The plant liquid releases are further diluted in the MCR and allow for radioactive decay to occur before ultimate release from the site to unrestricted areas. The reservoir lies totally within the confines of the site and the use of its water is restricted to plant operation.

Liquid effluent discharge into the MCR can be released to unrestricted areas in the Little Robbins Slough or the Colorado River, and ultimately Matagorda Bay, providing further dilution prior to reaching the potential Maximally Exposed Individual (MEI).

Dilution flow rates in the Colorado River, Matagorda Bay and Little Robbins Slough used to evaluate the liquid pathway dose to the MEI, were obtained using information from the STP 2006 Offsite Dose Calculation Manual (ODCM). They were inputs to the LADTAP II computer program, as referenced in Table 12.2-34, footnotes 1, 2, and 3.

The liquid pathway doses to the MEI are determined to be in Little Robbins Slough and are presented in Table 12.2-23. Dose to the MEI comply with the requirements of 10 CFR 50 Appendix I.

12.2.3 COL License Information

12.2.3.1 Compliance with 10 CFR 20 and 10 CFR 50 Appendix I

The following supplement addresses COL License Information Item 12.5.

Using site-specific parameters, doses from the average annual liquid releases and the average annual airborne releases to the environment have been computed. The releases and doses are shown in Tables 12.2-20 through 12.2-23. Tables 12.2-35 and 36 demonstrate that the average annual liquid and airborne releases are in compliance with 10 CFR 20 and 10 CFR 50 Appendix I. Table 12.2-36 demonstrates compliance with 40 CFR 190 as specified in 10 CFR 20.1301(e).

12.2.4 References

12.2-12 NRC (U.S. Nuclear Regulatory Commission) 1987. GASPAR II Technical Reference and User Guide, NUREG/CR-4653, Office of Nuclear Reactor Regulation, Washington D.C., March.

12.2-13 STP (South Texas Project) 2007. Offsite Dose Calculation Manual, Revision 15, South Texas Project, STI32207439, October 1, 2007.

12.2-14 STP (South Texas Project) 2006. 2005 Radioactive Effluent Release Report, South Texas Project Electric Generating Station, April 27, 2006.

12.2-15 NRC (U.S. Nuclear Regulatory Commission) 1986. LADTAP II Technical Reference and User Guide, NUREG/CR-4013, Office of Nuclear Reactor Regulation, Washington D.C., April.

12.2-16 NRC (U.S. Nuclear Regulatory Commission) 1977. Calculation of Annual Doses to Man from Routine Releases of Reactor Effluents for the Purpose of Evaluating Compliance with 10 CFR Part 50, Appendix I, Regulatory Guide 1.109, Revision 1, Office of Standards Development, Washington D.C., October.

Table 12.2-3b Gamma Ray Source Energy Spectra - Post-Operation Gamma Sources in the Core* (pJ/W.s)‡

Energy Bounds (pJ)	Time after Shutdown 0 s	*1 day*	*1 week*	*1 month*
9.6E-01				
	1.3E-03	*1.6E-01*	*1.6E+00*	*1.6E-01*
6.4E-01				
	2.9E+03	*1.1E+00*	*7.4E-01*	*1.6E-01*
4.8E-01				
	1.7E+03	*9.1E-01*	*5.9E-01*	*1.6E-01*
4.2E-01				
	2.7E+03	*4.6E+01*	*2.7E+01*	*1.6E-01*
3.5E-01				
	3.4E+03	*7.2E+01*	*6.4E+00*	*8.0E-02*
2.9E-01				
	5.3E+03	*5.0E+02*	*3.4E+02*	*1.0E+02*
2.2E-01				
	5.9E+03	*3.7E+02*	*2.6E+02*	*1.8E+02*
1.4E-01				
	8.2E+03	*1.2E+03*	*6.1E+02*	*3.4E+02*
6.4E-02				
	1.9E+03	*2.9E-03*	*1.4E+02*	*5.8E+01*
1.6E-02				

* *Operating history of 3.2 years.*

‡ The information provided in this table shall not be used for detailed facility design, including shielding design and evaluation of equipment qualification, operational procedures, or as a basis for any changes to the final safety analysis report (FSAR).

Table 12.2-3c Gamma Ray Source Energy Spectra - Gamma Ray Sources External to the Core During Operation‡

	Gamma Ray Source pJ/cm^3/s/MWt			
Energy Bounds (pJ)	***Zone H***	***Shroud***	***Zone 1***	***Vessel***
E > 1.60	*1.9E-07*	*2.7E-03*	*4.3E-09*	*3.0E-07*
1.28 < E < 1.60	*5.3E-04*	*41.7*	*1.2E-05*	*3.0E-04*
0.96 < E < 1.28	*0.14*	*76.9*	*2.4E-03*	*3.0E-03*
0.64 < E < 0.96	*8.3E-04*	*24.0*	*1.6E-05*	*8.2E-04*
0.32 < E < 0.64	*35.2*	*17.6*	*4.6E-02*	*8.3E-04*
0.16 < E < 0.32	*4.5E-03*	*7.7*	*6.1E-05*	*3.8E-04*
8.2E-02 < E < 0.16	*3.7E-03*	*4.6*	*5.0E-05*	*3.3E-04*
3.2E-02 < E < 8.2E-02	*1.1E-02*	*1.3*	*1.9E-04*	*3.3E-05*
E < 3.2E-02	*1.3E-04*	*0.30*	*2.6E-06*	*1.5E-05*

‡ The information provided in this table shall not be used for detailed facility design, including shielding design and evaluation of equipment qualification, operational procedures, or as a basis for any changes to the final safety analysis report (FSAR).

Table 12.2-5a Radiation Sources—Radiation Sources

Source Table	For	Drawing	~~Location~~	Approximate Geometry
12.2-6	RHR Heat Exchanger	12.3-1	~~(R1,RF)~~ ~~(R6,RA)~~ ~~(R6,RF)~~	Rt Cylndr (r=0.9m, l=7m)
12.2-8	RCIC Turbine	12.3-1	~~(R6,RC)~~	Rt Cylndr (r=0.5m, l=0.7m)
12.2-9	CUW Filter Demineralizer	12.3-3	~~(R2,RB)~~	2 Tanks, Rt Cylndr (r=0.6m, l=3.3m)
12.2-10	CUW Regen Heat Exchanger	12.3-2	~~(R1,RC)~~	Rt Cylndr (r=~~0.4m~~ **0.63m**, l=~~6.8m~~ 4.9m)
12.2-11	CUW Non-Regen Heat Exchanger	12.3-1	~~(R1,RC)~~	Rt Cylndr (r=0.4m, l=5.5m)
~~12.2-13.1~~ **12.2-13a**	LCW Collector Tank	12.3-37 12.3-38	~~ITEM 7~~	~~2~~ 4 Tanks, Rt Cylndr (r=~~4.~~2.74m, l=~~9.49.~~9.58~~58~~m)
~~12.2-13.2~~ **12.2-13b**	LCW Filter**/Demin Skid**	12.3-39	~~ITEM 12~~	~~Rt Cylndr (r=0.5m, l=2.5m)~~**Rt cylndr (r=0.5m, l=1.8m)**
~~12.2-13.3~~	~~LCW Demineralizer~~	~~12.3-39~~	~~ITEM 11~~	~~Rt Cylndr (r=0.6m, l=2.8m)~~
~~12.2-13.4~~ **12.2-13d**	LCW Sample Tank	12.3-37 12.3-38	~~ITEM 8~~	2 Tanks, Rt Cylndr (r=~~4.~~**2.74**m, l=~~9.49~~9.58.~~58~~m)
~~12.2-13.5~~ **12.2-13e**	HCW Collector Tank	12.3-37 12.3-38	~~ITEM 13~~	3 Tanks, Rt Cylndr (~~r=2.2m, l=4.3m~~)(r=2.74m, l=9.58m)
~~12.2-13.6~~ **12.2-13f**	HCW **Filter**/ Demin~~eralizer~~ **Skid**	12.3-39	~~ITEM 20~~	~~Rt Cylnder (r=0.6m, l=2.8m)~~**Rt cylndr (r=0.5m, l=1.8m)**
12.2-13g	**HCW Sample Tank**	**12.3-37 12.3-38**		**Rt Cylinder (r=2.74m, l=9.58m)**
12.2-13h	**HSD Receiver Tank**	**12.3-37 12.3-38**		**Cylinder (r=1.98m, l=4.4m)**
12.2-13i	**HSD Sample Tank**	**12.3-37 12.3-38**		**Cylinder (r=1.98m, l=4.4m)**
12.2-13j	**Chem Drain Tank**	**12.3-37**		**Cylinder (r=0.91m, l=2.6m)**
12.2-14	Offgas	12.3-50	~~(TF,T2)~~	Tank 1, Rt Cylndr (r=0.6m, l=7.6m) Tanks 2-9, Rt Cylndr (r=1.1m, l=7.6m)
12.2-29	Steam Jet Air Ejector	12.3-51	~~(TF,T2)~~	Rt Cylndr (r=0.15m, l=4.6m) Rt Cylndr (r=0.76m, l=6.1m) Rt Cylndr (r=0.2m, l=4.6m)
12.2-14	Offgas Recombiner	12.3-51	~~(TF,T2)~~	Rt Cylndr (r=1.4m, l=7m)
~~12.2-15.1~~ **12.2-15a**	CUW Backwash Receiving Tank	12.3-1	~~(R2,RB)~~	Rt Cylndr (r=2.2m, l=5.7m)
~~12.2-15.2~~ **12.2-15b**	CF Backwash Receiving Tank	12.3-49	~~(TD,T4)~~	Rt Cylndr (r=2.2m, l=5.7m)

Table 12.2-5a Radiation Sources—Radiation Sources (Continued)

Source Table	For	Drawing	~~Location~~	Approximate Geometry
~~12.2-15.3~~ **12.2-15c**	Phase Separator**s**	12.3-37 12.3-38	~~ITEM 30~~	2 Tanks, Rt Cylndr (r=~~2.4~~ **2.3**m, l=~~6.0~~**9.7**m)
~~12.2-15.4~~ **12.2-15d**	Spent Resin Storage Tanks	12.3-37 12.3-38	~~ITEM 31~~	Rt Cylndr (r=2.0m, l=~~5.7~~**6.6**m), **2 Tanks**
~~12.2-15.5~~	~~Concentrated Waste Tank~~	~~12.3-37~~	~~ITEM 35~~	~~Rt Cylndr (r=1.5m, l=4.4m)~~
~~12.2-15.6~~	~~Solids Dryer Feed Tank~~	~~12.3-41~~	~~ITEM 39~~	~~Rt Cylndr (r=1.6m, l=3.2m)~~
~~12.2-15.7~~	~~Solids Dryer (outlet)~~	~~12.3-39~~	~~ITEM 55~~	~~Rt Cylndr (r=0.2m, l=3.2m)~~
~~12.2-15.8~~	~~Solids Pelletizer~~	~~12.3-38~~	~~ITEM 58~~	~~Rt Cylndr (r=0.4m, l=2.5m)~~
~~12.2-15.9~~	~~Sol Mist Separator (steam)~~	~~12.3-39~~	~~ITEM 56~~	~~Rt Cylndr (r=0.1m, l=2.8m)~~
~~12.2-15.10~~	~~Sol Condenser~~	~~12.3-40~~	~~ITEM 57~~	~~Rt Cylndr (r=0.2m, l=1.4m)~~
~~12.2-15.11~~	~~Sol Drum~~	~~12.3-39~~	~~(2,D)~~	~~Rt Cylndr (r=0.3m, l=0.8m)~~ ~~Box (1.5mx1.5mx1m)~~
12.2-15l	**LW Receiving Tank**	**12.3-37 12.3-38**		**Cylinder (r=1.98m, l=6.6m)**
12.2-16	FPC Filter Demineralizer	12.3-3	~~(R2,RB)~~	Rt Cylndr (r=0.7m, l=3.4m)
12.2-17	Suppression Pool Cleanup System*	12.3-3	~~(R2,RA)~~	Rt Cylndr (r=0.7m, l=3.4m)
12.2-18	Control Rod Drive System†	12.3-2	~~(R4,RF)~~	Distributed Source
12.2-24	Traversing Incore Probe	12.3-2	~~(R4,RB)~~	Distributed Source
12.2-25	Reactor Internal Pumps‡	12.3-2	~~(RF,R1)~~	Distributed Source
12.2-25	RIP Heat Exchanger	1.2-3b	~~El 3000~~	Rt Cylndr (r=0.322m, l=2.9m)
12.2-26	Turbine Moisture Separator/Reheater	12.3-52	~~(T6,TE)~~	Rt Cylndr (r=1.8m, l=31.m)
12.2-27	Turbine Condenser	12.3-53	~~(TD,TG)~~	Distributed Source
12.2-28	Condenser Filter/ Demineralizer Filter Demineralizer	 12.3-51 12.3-51	 ~~(TC,T2)~~ ~~(TC,T3)~~	 3 Tanks, Rt Cylndr(r=1.4m, l=6.1m) 6 Tanks, Rt Cylndr(r=1.7m, l=5.1m)
12.2-30	SGTS Filter Train	12.3-7	~~(R2,RB)~~	Surface, (3.66m x 2.54m)§
~~Applicant~~ ~~See Appendix~~ **12B-1 through 7**	Spent Fuel Storage	12.3-6 **12.3-10**	~~(R4,RF)~~	~~See Drawings~~ ~~**14.0m x 9.4m x 11.9m deep (pool)**~~ ~~**10.7m x 9.0m x 4.5m (fuel racks)**~~ ~~**Active Fuel Assembly dimensions: 0.152m (6in) square x 3.8m height**~~ **See Appendix 12B**
12.2-37	Condensate Storage Tank			Rt Cylinder (r=7m, l=14m)

* Suppression pool clean up F/D uses second of Fuel Pool F/D
† Maintenance Facility
‡ Maintenance Facility, see Figure 1.2-3b Elevation 3000 for drywell location
§ Surface area of HEPA and charcoal filter

Table 12.2-5b Radiation Sources—Source Geometry

Component	Assumed Shielding Source Geometry
RHR Heat Exchanger	Homogenous source over volume of heat exchanger
RCIC Turbine	Homogenous source over volume of turbine
CUW Filter Demineralizer	80% of source in first 15 cm, remainder dispersed over volume.
CUW Regen Heat Exchanger	Homogenous source over volume of exchanger
CUW Non-Regen Heat Exchanger	Homogenous source over volume of exchanger
LCW Collector Tank	80% non-solubles in slurry on tank bottom, rest evenly dispersed in volume
LCW Filter**/Demin Skid**	~~*Homogenous source over volume of filter*~~**Homogenous source over volume of skid**
~~*LCW Demineralizer*~~	~~*80% of source in first 15 cm, rest evenly dispersed over volume*~~
LCW Sample Tank	Homogenous source over volume of tank
HCW Collector Tank	Homogenous source over volume of tank
HCW **Filter/**Demin~~*eralizer*~~ **Skid**	~~*80% of source in first 15 cm, rest evenly dispersed over volume*~~**Homogenous source over volume of skid**
Offgas	90% of source in first tank in first (upper) 30 cm, rest evenly dispersed. Remaining tanks, homogenous source over tank volume.
Steam Jet Air Ejector*	Homogenous source over volume of ejector
Offgas Recombiner*	Homogenous source over subcomponent ~~*(Figure 12.2-14)*~~†
CUW Backwash Receiving Tank	80% non-solubles in slurry on tank bottom, rest evenly dispersed in volume
CF Backwash Receiving Tank	80% non-solubles in slurry on tank bottom, rest evenly dispersed in volume
Phase Separator	90% non-solubles in slurry on tank bottom, rest evenly dispersed in volume
Spent Resin Storage Tank	Homogenous source over volume of tank
~~*Concentrated Waste Tank*~~	~~*90% non-solubles in slurry on tank bottom, rest evenly dispersed in volume*~~
~~*Sol Dryer Feed Tank*~~	~~*Source evenly dispersed over volume*~~
~~*Sol Dryer (outlet)*~~	~~*Source evenly dispersed over volume*~~
~~*Sol Peletizer*~~	~~*Source evenly dispersed over volume*~~
~~*Sol Mist Separator (steam)*~~	~~*Source evenly dispersed over volume*~~
~~*Sol Condenser*~~	~~*Source evenly dispersed over volume*~~
~~*Sol Drum*~~	~~*Source evenly dispersed over volume*~~
FPC Filter Demineralizer	90% insolubles in first 15 cm, rest of source evenly dispersed over volume
Supression Pool Cleanup System	90% insolubles in first 15 cm, rest of source evenly dispersed over volume
Control Rod Drive System	Exposure dependent, assume evenly dispersed over length of blade
Transverse Incore Probe	Point or line geometry (Table 12.2-24)
Reactor Internal Pumps	Cylindrical source coupled to water bearing components
RIP Heat Exchanger	Homogenous source over volume of exchanger

Table 12.2-5b Radiation Sources—Source Geometry (Continued)

Component	Assumed Shielding Source Geometry
Turbine Moisture Separator/Reheater	Homogenous source over volume of exchanger
Turbine Condenser	Homogenous source over volume of exchanger
Condenser Filter/Demineralizer	Homogenous source over volume of exchanger
Filter	Source evenly dispersed over volume of filter
Demineralizer	90% insolubles in first 15 cm, rest of source evenly dispersed over volume
SGTS Filter Train	90% particulates on HEPA filter, remaining on charcoal filter
Spent Fuel Storage	~~*Applicant*~~ ~~Spent fuel~~Homogenous source~~ evenly dispersed~~ over the assumed active fuel volume of racks in the pool
HSD Receiver Tank	**Homogenous source over volume of tank**
HSD Sample Tank	**Homogenous source over volume of tank**
LW Backwash Receiving	**Homogenous source over volume of tank**
Chem Drain Tank	**Homogenous source over volume of tank**
HCW Sample Tank	**Homogenous source over volume of tank**
Condensate Storage Tank	Homogeneous source over volume of tank

* Radiation levels in SJAE and recombiner highly dependent upon power level. Actual measurements on SJAE condenser contact dose rate are $2x10^{-3}$ Gy/h at 100% power and less than $5x10^{-2}$m Gy/h at 20% power.

† See Offgas Recombiner Description, Section 11.3, use inventory for preheater, recombiner, condenser and cooler for recombiner inventory for shielding applications.

Table 12.2-5c Radiation Sources—Shielding Geometry in Meters

Component	Room Dimensions			Wall Thickness in Meters					
	Length	**Width**	**Height**	**East**	**West**	**North**	**South**	**Floor**	**Ceiling**
RHR Heat Exchanger	12.6	5.6	5.6	0.8	0.6	0.6	0.6	Ground	0.8
RCIC Turbine	14.6	7.8	5.6	0.8	2	0.6	0.6	Ground	0.8
CUW Filter Demineralizer	2.8	3	7.4	0.8	1	0.8	1	0.5	Hatch
CUW Regen Heat Exchanger	7.7	3.6	6	1.4	1.4	1	1.4*	0.8	0.5
CUW Non-Regen Heat Exchanger	7.4	4.4	5.6	1	1	1	1†	Ground	0.8
LCW Collector Tank **(4 Tanks)**	~~19~~**16**	~~1~~**15**	13	~~1.2~~**0.6**	~~0.8~~**0.6**	~~0.8~~**0.9**	~~1.2~~**0.9**	Ground	0.8
LCW Filter**/Demin Skid *****	~~16.4~~**10**	~~10.6~~**8**	~~8~~**3**	~~0.8~~**0.8**	~~0.8~~**0.8**	~~0.8~~**0.8**	~~0.8~~**0.8**	~~0.8~~**0.8**	~~0.8~~**0.8**
~~LCW Demineralizer†)~~**HCW Filter/Demin Skid*****	~~19.6~~**10**	~~10.6~~**8**	~~8~~**3**	~~0.8~~**0.3**	~~0.8~~**0.3**	~~0.8~~**0.3**	~~0.8~~**0.3**	~~0.8~~**0.3**	~~0.8~~**0.3**
LCW Sample Tank **(2 Tanks)**	~~19~~**7.4**	~~10~~**15**	13	~~1.2~~**0.6**	~~0.8~~**0.6**	1.2	~~0.8~~**0.6**	Ground	0.8
HCW Collector Tank **(3 Tanks-L-Shape Room)**	~~9~~**16**	~~11.2~~**15**	~~5.4~~**13**	~~0.8~~**0.9**	~~0.8~~**0.6**	~~0.8~~**0.9**	~~1.2~~**0.9**	Ground	0.8
~~HCW Demineralizer†~~	~~19.6~~	~~10.6~~	~~8~~	~~0.8~~	~~0.8~~	~~0.8~~	~~0.8~~	~~0.8~~	~~0.8~~
Offgas	9.1	11	16	1	1	1	1	2.5	1
Steam Jet Air Ejector and Recombiner Room	9.1	14.2	7	1	1	1	1	1	1
CUW Backwash Receiving Tank	6.6	7.4	5.6	1	0.8	0.8	1	Ground	0.8
CF Backwash Receiving Tank	5	5	25	1	1	1	1	2.5	Hatch
Phase Separator Tank A	**5.4**	**8.6**	**13**	**1.2**	**1.2**	**1.2**	**0.6**	**Ground**	**0.8**
Phase Separator **Tank B**	~~16~~**5.4**	~~8.4~~**8.6**	~~4.6~~**13**	~~0.8~~**1.2**	~~0.8~~**1.2**	~~0.8~~**0.6**	1.2	~~0.8~~**Ground**	0.8
~~Spent Resin Storage Tank~~	~~6.4~~	~~6.4~~	~~4.6~~	~~0.8~~	~~0.8~~	~~0.8~~	~~0.8~~	~~0.8~~	~~0.8~~
~~Concentrated Waste Tank~~	~~4.6~~	~~5~~	~~5.4~~	~~0.8~~	~~0.8~~	~~1.2~~	~~0.8~~	~~Ground~~	~~0.8~~

Table 12.2-5c Radiation Sources—Shielding Geometry in Meters (Continued)

Component	Room Dimensions			Wall Thickness in Meters					
	Length	Width	Height	East	West	North	South	Floor	Ceiling
~~*Sol Dryer Feed Tank*~~	~~*9.4*~~	~~*7.2*~~	~~*6.2*~~	~~*0.8*~~	~~*0.8*~~	~~*0.8*~~	~~*0.8*~~	~~*0.8*~~	~~*0.8*~~
~~*So- Dryer (outlet)*~~‡	~~*9.2*~~	~~*5.2*~~	~~*8*~~	~~*0.8*~~	~~*0.8*~~	~~*0.8*~~	~~*0.8*~~	~~*0.8*~~	~~*0.8*~~
~~*Sol Peletizer*~~	~~*9.2*~~	~~*5.2*~~	~~*6.8*~~	~~*0.8*~~	~~*0.8*~~	~~*0.8*~~	~~*0.8*~~	~~*0.8*~~	~~*0.8*~~
~~*Sol Mist Separator (steam)*~~‡	~~*9.2*~~	~~*5.2*~~	~~*8*~~	~~*0.8*~~	~~*0.8*~~	~~*0.8*~~	~~*0.8*~~	~~*0.8*~~	~~*0.8*~~
~~*Sol Condenser*~~	~~*4.2*~~	~~*7.2*~~	~~*6.2*~~	~~*0.8*~~	~~*0.8*~~	~~*0.8*~~	~~*0.8*~~	~~*0.8*~~	~~*0.8*~~
~~*Sol Drum*~~	~~*3.2*~~	~~*3*~~	~~*8*~~	~~*0.8*~~	~~*0.8*~~	~~*0.8*~~	~~*0.8*~~	~~*0.8*~~	~~*0.8*~~
FPC Filter Demineralizer	3.2	3.2	7.4	0.8	1	0.8	0.8	0.5	Hatch
Suppression Pool Cleanup Sys	3.2	3.2	7.4	0.5	0.8	0.8	0.8	0.5	Hatch
Control Rod Drive System*	7.6	33.4	5.8	0.6	0.6	0.6	0.6	0.8	0.6
Transverse Incore Probe	4	7.3	2.7	1	1	1	1	Mezz	0.6
Reactor Internal Pumps**	8.2	8.5	5.8	0.6	0.6	0.6	0.6	0.8	0.6
RIP Heat Exchanger	Primary Containment								
Turbine Moisture Sep/Reheater	12.4	47.6	8.5	1	1	1	1	1	1
Turbine Condenser	14.2	36	25	3.5	2.5	1	1	2.5	Turbine
Condenser Filter	5	21.1	8	2.5†	1	1	1	1	Hatch
Condenser Demineralizer	9.8	17.3	9	1	1	1	1.6	1	1
SGTS Filter Train	14.4	5	8.2	0.2	0.5	0.2	0.2	2	0.6
Spent Fuel Storage	9.4	14	4.1	2	2	2	2	2	7.4**
HSD Receiver and Sample Tanks	**7.7**	**7.2**	**12.7**	**0.6**	**0.6**	**0.6**	**0.6**	**Ground**	**0.6**
LW Backwash Receiving	**5.6**	**7.0**	**13**	**0.6**	**0.6**	**0.6**	**0.6**	**Ground**	**0.8**
Chem Drain Collector Tank	**4.4**	**3.7**	**6.3**	**0.3**	**0.6**	**0.6**	**0.6**	**Ground**	**0.6**
HCW Sample Tank (2 Tanks)	**15**	**7.7**	**13**	**0.6**	**0.6**	**1.2**	**0.6**	**Ground**	**0.8**

Table 12.2-5c Radiation Sources—Shielding Geometry in Meters (Continued)

Component	Room Dimensions			Wall Thickness in Meters					
	Length	Width	Height	East	West	North	South	Floor	Ceiling
Spent Resin Storage Tank									
Tank A	**5.2**	**6.4**	**10.1**	**0.9**	**0.9**	**0.9**	**0.9**	**Ground**	**0.6**
Tank B	**5.2**	**5.2**	**10.1**	**0.9**	**0.9**	**0.9**	**0.9**	**Ground**	**0.6**
Condensate Storage Tank	N/A	N/A	N/A	N/A	N/A	N/A	N/A	Ground	Air

*) Moveable Wall

~~#) LCW and HCW Demineralizer share same room~~

~~# Solid dryer and Mist Separator share same room~~

‡ Maintenance Facility

*** The LCW and HCW Filter Demineralizer Skids ~~will be~~, identified as “LRW System Skids”, are vendor provided. They will be located on the ground floor elevation, 10700 (See Fig. 1.2-23C), The vendor will provide the skids with shielding adequate to maintain the Room, 6381, as a Radiation Zone C. The room dimensions provided are approximate since the shield walls will be movable and the final arrangement will depend on the equipment provided.

** 7.4m water depth above fuel elements

Table 12.2-9 CUW Filter Demineralizer

Source volume = 3.7m^3

Total MBq = 1.94E+08

Halogens		Soluble fission Products		Insoluble fission Products		Activation Products	
Isotope	MBq	Isotope	MBq	Isotope	MBq	Isotope	MBq
I-131	2.41E+07	Rb-89	2.82E+04	Y-91	3.66E+05	Na-24	5.01E+06
I-132	3.06E+06	Sr-89	9.40E+05	Y-92	7.37E+05	P-32	1.32E+06
I-133	2.20E+07	Sr-90	7.27E+04	Y-93	1.36E+06	Cr-51	4.99E+07
I-134	2.01E+06	Y-90	7.27E+04	Zr-95	7.41E+04	Mn-54	7.12E+05
I-135	9.52E+06	Sr-91	1.27E+06	Nb-95	7.41E+04	Mn-56	4.44E+06
		Sr-92	9.76E+05	Ru-103	1.73E+05	Co-58	1.87E+06
		Mo-99	4.05E+06	Rh-103m	1.73E+05	Co-60	4.10E+06
		Tc-99m	4.05E+06	Ru-106	3.11E+04	Fe-55	5.41E+06
		Te-129m	3.36E+05	Rh-106	3.11E+04	Fe-59	2.73E+05
		Te-131m	9.27E+04	La-140	2.51E+06	Ni-63	1.03E+07
		Te-132	2.37E+05	Ce-141	2.58E+05	Cu-64	1.22E+07
		Cs-134	1.54E+05	Ce-144	3.09E+04	Zn-65	2.00E+06
		Cs-136	6.44E+04	Pr-144	3.09E+04	Ag-110m	1.00E+04
		Cs-137	4.23E+05			W-187	2.28E+05
		Cs-138	2.07E+05				
		Ba-140	2.51E+06				
		Np-239	1.44E+07				
Total	6.06E+07	Total	2.98E+07	Total	5.85E+06	Total	9.77E+07

Table 12.2-13a Liquid Radwaste Component Inventories-LCW Collector Tank

Source volume = 140m^3

Total MBq = 7.40E+05

Halogens		Soluble Fission Products		Insoluble Fission Products		Activation Products	
Isotope	MBq	Isotope	MBq	Isotope	MBq	Isotope	MBq
I-131	2.03E+04	Rb-89	9.42E+01	Y-91	2.97E+04	Na-24	1.29E+04
I-132	8.06E+03	Sr-89	2.11E+03	Y-92	2.32E+03	P-32	2.65E+03
I-133	5.54E+04	Sr-90	2.67E+02	Y-93	2.72E+04	Cr-51	1.04E+05
I-134	5.28E+03	Y-90	2.67E+02	Zr-95	6.03E+03	Mn-54	2.21E+03
I-135	2.50E+04	Sr-91	3.33E+03	Nb-95	6.03E+03	Mn-56	1.17E+04
		Sr-92	2.57E+03	Ru-103	1.38E+04	Co-58	4.43E+03
		Mo-99	8.86E+03	Rh-103m	1.38E+04	Co-60	1.47E+04
		Tc-99m	8.86E+03	Ru-106	2.69E+03	Fe-55	1.09E+04
		Te-129m	7.13E+02	Rh-106	2.69E+03	Fe-59	6.02E+02
		Te-131m	2.25E+02	La-140	1.89E+05	Ni-63	3.79E+04
		Te-132	5.09E+02	Ce-141	2.04E+04	Cu-64	3.17E+04
		Cs-134	4.00E+02	Ce-144	2.66E+03	Zn-65	6.00E+03
		Cs-136	1.35E+02	Pr-144	2.66E+03	Ag-110m	3.01E+01
		Cs-137	1.22E+03			W-187	5.66E+02
		Cs-138	5.46E+02				
		Ba-140	5.04E+03				
		Np-239	3.20E+04				
Total	1.14E+05	Total	6.72E+04	Total	3.19E+05	Total	2.40E+05

Table 12.2-13b Liquid Radwaste Component Inventories-LCW Filter/Demin Skid

Source Volume = 1.42m^3

Total MBq = 6.52E+06

Halogens		Soluble Fission Products		Insoluble Fission Products		Activation Products	
Isotope	**MBq**	**Isotope**	**MBq**	**Isotope**	**MBq**	**Isotope**	**MBq**
I-131	3.64E+05	Rb-89	1.39E+03	Y-91	3.20E+04	Na-24	6.69E+04
I-132	7.31E+04	Sr-89	4.14E+04	Y-92	3.02E+04	P-32	2.56E+04
I-133	2.79E+05	Sr-90	1.36E+04	Y-93	2.03E+04	Cr-51	1.48E+06
I-134	5.55E+04	Y-90	1.36E+04	Zr-95	4.12E+03	Mn-54	9.25E+04
I-135	1.65E+05	Sr-91	1.94E+04	Nb-95	6.09E+03	Mn-56	1.02E+05
		Sr-92	2.24E+04	Ru-103	6.51E+03	Co-58	1.09E+05
		Mo-99	4.79E+04	Rh-103m	6.52E+03	Co-60	7.36E+05
		Tc-99m	4.70E+04	Ru-106	4.30E+03	Fe-55	1.71E+06
		Te-129m	1.13E+04	Rh-106	4.30E+03	Fe-59	1.12E+04
		Te-131m	1.13E+03	La-140	5.22E+04	Ni-63	1.89E+03
		Te-132	2.84E+02	Ce-141	8.48E+03	Cu-64	1.68E+05
		Cs-134	2.94E+04	Ce-144	3.93E+03	Zn-65	2.42E+05
		Cs-136	1.36E+03	Pr-144	3.93E+03	Ag-110m	1.19E+03
		Cs-137	9.41E+04			W-187	2.79E+03
		Ba-137m	8.79E+04				
		Cs-138	5.62E+03				
		Ba-140	4.63E+04				
		Np-239	1.71E+05				
TOTAL	**9.37E+05**	**TOTAL**	**6.55E+05**	**TOTAL**	**1.83E+05**	**TOTAL**	**4.75E+06**

Table 12.2-13c ~~*Liquid Radwaste Component Inventories LCW Demineralizer*~~ Not Used

Table 12.2-13d Liquid Radwaste Component Inventories-LCW Sample Tank

Source volume = 140m^3

Total MBq = 5.84E+02

Halogens		Soluble Fission Products		Insoluble Fission Products		Activation Products	
Isotope	MBq	Isotope	MBq	Isotope	MBq	Isotope	MBq
I-131	1.82E+01	Rb-89	5.63E-03	Y-91	2.92E+01	Na-24	4.30E+00
I-132	4.35E-01	Sr-89	2.07E+00	Y-92	1.94E-01	P-32	2.49E+00
I-133	2.37E+01	Sr-90	2.67E-01	Y-93	6.43E+00	Cr-51	1.01E+02
I-134	1.09E-01	Y-90	2.67E-01	Zr-95	5.95E+00	Mn-54	2.20E+00
I-135	3.90E+00	Sr-91	7.37E-01	Nb-95	5.95E+00	Mn-56	7.12E-01
		Sr-92	1.64E-01	Ru-103	1.35E+01	Co-58	4.37E+00
		Mo-99	6.54E+00	Rh-103m	1.35E+01	Co-60	1.47E+01
		Tc-99m	6.54E+00	Ru-106	2.68E+00	Fe-55	9.91E+00
		Te-129m	6.95E-01	Rh-106	2.68E+00	Fe-59	5.90E-01
		Te-131m	1.20E-01	La-140	1.76E+02	Ni-63	3.79E+01
		Te-132	3.93E-01	Ce-141	1.99E+01	Cu-64	9.22E+00
		Cs-134	3.99E+00	Ce-144	2.65E+00	Zn-65	5.98E+00
		Cs-136	1.26E+00	Pr-144	2.65E+00	Ag-110m	3.00E-02
		Cs-137	1.22E+01			W-187	2.65E-01
		Cs-138	6.92E-02				
		Ba-140	4.71E+00				
		Np-239	2.25E+01				
Total	4.63E+01	Total	6.25E+01	Total	2.82E+02	Total	1.93E+02

Table 12.2-13e Liquid Radwaste Component Inventories-HCW Collector Tank

Source volume = 140m^3

Total MBq = 1.80E+04

Halogens		Soluble Fission Products		Insoluble Fission Products		Activation Products	
Isotope	MBq	Isotope	MBq	Isotope	MBq	Isotope	MBq
I-131	4.45E+02	Rb-89	2.57E+02	Y-91	5.51E-01	Na-24	4.94E+01
I-132	9.76E+00	Sr-89	5.68E+00	Y-92	4.05E+02	P-32	6.51E+00
I-133	2.57E+02	Sr-90	4.27E+01	Y-93	6.59E+02	Cr-51	6.51E+00
I-134	5.68E+00	Y-90	1.32E-01	Zr-95	7.35E+01	Mn-54	4.04E+01
I-135	4.27E+01	Sr-91	1.87E+02	Nb-95	2.53E+00	Mn-56	2.19E+02
		Sr-92	1.55E+01	Ru-103	7.87E+00	Co-58	9.38E+03
		Mo-99	1.55E+01	Rh-103m	1.50E+01	Co-60	1.50E+02
		Tc-99m	6.96E+00	Ru-106	1.50E+01	Fe-55	1.41E+01
		Te-129m	3.13E+00	Rh-106	3.38E+01	Fe-59	3.79E+02
		Te-131m	2.30E+02	La-140	3.38E+01	Ni-63	8.72E+02
		Te-132	2.30E+02	Ce-141	6.56E+00	Cu-64	7.90E+02
		Cs-134	6.46E+01	Ce-144	6.56E+00	Zn-65	5.40E+01
		Cs-136	1.75E+00	Pr-144	4.05E+02	Ag-110m	2.19E+03
		Cs-137	1.64E+01			W-187	8.47E+01
		Cs-138	5.84E+01				
		Ba-140	1.88E+01				
		Np-239	1.62E+02				
Total	7.60E+02	Total	1.32E+03	Total	1.66E+03	Total	1.42E+04

Table 12.2-13f Liquid Radwaste Component Inventories-HCW ~~Demineralizer~~ Filter/Demin Skid

Source Volume = 1.42m^3

Total MBq = 2.02E+04

Halogens		Soluble Fission Products		Insoluble Fission Products		Activation Products	
Isotope	**MBq**	**Isotope**	**MBq**	**Isotope**	**MBq**	**Isotope**	**MBq**
I-131	1.04E+03	Rb-89	1.80E+00	Y-91	1.05E+02	Na-24	1.76E+02
I-132	1.08E+02	Sr-89	1.34E+02	Y-92	6.03E+01	P-32	7.44E+01
I-133	7.71E+02	Sr-90	4.60E+01	Y-93	4.77E+01	Cr-51	4.45E+03
I-134	6.94E+01	Y-90	4.60E+01	Zr-95	1.32E+01	Mn-54	3.16E+02
I-135	3.36E+02	Sr-91	4.52E+01	Nb-95	2.02E+01	Mn-56	1.55E+02
		Sr-92	3.44E+01	Ru-103	2.05E+01	Co-58	3.60E+02
		Mo-99	1.45E+02	Rh-103m	2.06E+01	Co-60	2.47E+03
		Tc-99m	1.40E+02	Ru-106	1.46E+01	Fe-55	5.69E+03
		Te-129m	3.54E+01	Rh-106	1.46E+01	Fe-59	3.59E+01
		Te-131m	3.20E+00	La-140	1.51E+02	Ni-63	6.40E+00
		Te-132	8.34E-01	Ce-141	2.64E+01	Cu-64	4.27E+02
		Cs-134	1.53E+02	Ce-144	1.34E+01	Zn-65	8.21E+02
		Cs-136	6.13E+00	Pr-144	1.34E+01	Ag-110m	4.10E+00
		Cs-137	4.81E+02			W-187	7.97E+00
		Ba-137m	4.49E+02				
		Cs-138	7.34E+00				
		Ba-140	1.33E+02				
		Np-239	5.09E+02				
TOTAL	**2.32E+03**	**TOTAL**	**2.37E+03**	**TOTAL**	**5.21E+02**	**TOTAL**	**1.50E+04**

Table 12.2-13g Liquid Radwaste Component Inventories-HCW Sample Tank

Source volume = 140m^3

Total MBq = 1.81E+00

Halogens		Soluble Fission Products		Insoluble Fission Products		Activation Products	
Isotope	MBq	Isotope	MBq	Isotope	MBq	Isotope	MBq
I-131	2.90E-02	Rb-89	9.29E-07	Y-91	6.90E-03	Na-24	3.38E-04
I-132	1.25E-03	Sr-89	1.75E-02	Y-92	4.99E-06	P-32	1.71E-02
I-133	2.99E-01	Sr-90	1.55E-03	Y-93	4.48E-05	Cr-51	8.22E-01
I-134	2.78E-04	Y-90	1.55E-03	Zr-95	1.42E-03	Mn-54	1.48E-02
I-135	1.57E-02	Sr-91	3.68E-05	Nb-95	1.42E-03	Mn-56	2.03E-05
		Sr-92	4.74E-06	Ru-103	3.09E-03	Co-58	3.60E-02
		Mo-99	7.92E-03	Rh-103m	3.09E-03	Co-60	8.70E-02
		Tc-99m	7.92E-03	Ru-106	6.50E-04	Fe-55	5.47E-02
		Te-129m	5.79E-03	Rh-106	6.50E-04	Fe-59	4.98E-03
		Te-131m	2.92E-05	La-140	3.07E-02	Ni-63	2.19E-01
		Te-132	6.41E-04	Ce-141	4.41E-03	Cu-64	6.05E-04
		Cs-134	5.77E-03	Ce-144	6.42E-04	Zn-65	4.14E-02
		Cs-136	1.43E-03	Pr-144	6.42E-04	Ag-110m	2.07E-04
		Cs-137	1.62E-02			W-187	4.20E-05
		Cs-138	1.65E-07				
		Ba-140	3.07E-02				
		Np-239	1.97E-02				
Total	3.45E-01	Total	1.17E-01	Total	5.36E-02	Total	1.30E+00

Table 12.2-13h Liquid Radwaste Component Inventories-HSD Receiver Tank

Source volume = 30.00m^3

Total MBq = 1.59E+03

Halogens		Soluble fission Products		Insoluble fission Products		Activation Products	
Isotope	**MBq**	**Isotope**	**MBq**	**Isotope**	**MBq**	**Isotope**	**MBq**
I-131	2.05E+02	Rb-89	3.32E-01	Y-91	2.29E+00	Na-24	4.71E+01
I-132	2.13E+01	Sr-89	5.92E+00	Y-92	5.32E+00	P-32	9.75E+00
I-133	2.25E+02	Sr-90	4.28E-01	Y-93	1.17E+01	Cr-51	3.33E+02
I-134	1.34E+01	Y-90	4.28E-01	Zr-95	4.61E-01	Mn-54	4.23E+00
I-135	7.46E+01	Sr-91	1.07E+01	Nb-95	4.61E-01	Mn-56	3.12E+01
		Sr-92	6.87E+00	Ru-103	1.12E+00	Co-58	1.16E+01
		Mo-99	4.55E+01	Rh-103m	1.12E+00	Co-60	2.41E+01
		Tc-99m	4.55E+01	Ru-106	1.85E-01	Fe-55	4.40E+01
		Te-129m	2.20E+00	Rh-106	1.85E-01	Fe-59	1.74E+00
		Te-131m	1.03E+00	La-140	1.90E+01	Ni-63	6.04E+01
		Te-132	2.59E+00	Ce-141	1.69E+00	Cu-64	1.10E+02
		Cs-134	1.64E+00	Ce-144	1.84E-01	Zn-65	1.19E+01
		Cs-136	8.76E-01	Pr-144	1.84E-01	Ag-110m	5.96E-02
		Cs-137	4.48E+00			W-187	2.41E+00
		Cs-138	1.37E+00				
		Ba-140	1.90E+01				
		Np-239	1.64E+02				
Total	5.39E+02	Total	3.13E+02	Total	4.39E+01	Total	6.91E+02

Table 12.2-13i Liquid Radwaste Component Inventories - HSD Sample Tank

Source volume = 30m^3

Total MBq = 2.43E+01

Halogens		Soluble fission Products		Insoluble fission Products		Activation Products	
Isotope	**MBq**	**Isotope**	**MBq**	**Isotope**	**MBq**	**Isotope**	**MBq**
I-131	3.01E+00	Rb-89	1.87E-04	Y-91	5.02E-02	Na-24	9.40E-01
I-132	1.05E-01	Sr-89	7.41E-02	Y-92	1.23E-01	P-32	1.34E-01
I-133	4.91E+00	Sr-90	5.36E-03	Y-93	1.92E-01	Cr-51	4.38E+00
I-134	2.44E-02	Y-90	5.37E-03	Zr-95	5.88E-03	Mn-54	5.33E-02
I-135	9.12E-01	Sr-91	1.73E-01	Nb-95	6.03E-03	Mn-56	1.62E-01
		Sr-92	3.75E-02	Ru-103	3.39E-03	Co-58	1.48E-01
		Mo-99	8.40E-01	Rh-103m	1.45E-02	Co-60	3.03E-01
		Tc-99m	8.08E-01	Ru-106	2.32E-03	Fe-55	7.54E-01
		Te-129m	2.88E-02	Rh-106	2.32E-03	Fe-59	2.24E-02
		Te-131m	2.21E-02	La-140	2.87E-01	Ni-63	---
		Te-132	4.54E-03	Ce-141	2.21E-02	Cu-64	2.04E+00
		Cs-134	2.08E-02	Ce-144	2.32E-03	Zn-65	1.50E-01
		Cs-136	1.22E-02	Pr-144	2.32E-03	Ag-110m	7.50E-04
		Cs-137	5.62E-02			W-187	5.23E-02
		Cs-138	1.57E-03				
		Ba-140	2.65E-01				
		Np-239	3.15E+00				
TOTAL	**8.96E+00**	TOTAL	**5.51E+00**	TOTAL	**7.14E-01**	TOTAL	**9.15E+00**

Table 12.2-13j Liquid Radwaste Component Inventories - Chemical Drain Tank

Source volume = 4m^3

Total MBq = 6.52E+00

Halogens		Soluble fission Products		Insoluble fission Products		Activation Products	
Isotope	**MBq**	**Isotope**	**MBq**	**Isotope**	**MBq**	**Isotope**	**MBq**
I-131	3.68E-01	Rb-89	4.10E-03	Y-91	4.93E-03	Na-24	3.56E-01
I-132	2.46E-01	Sr-89	8.15E-03	Y-92	1.36E-01	P-32	1.56E-02
I-133	1.40E+00	Sr-90	5.79E-04	Y-93	1.05E-01	Cr-51	4.91E-01
I-134	1.58E-01	Y-90	5.79E-04	Zr-95	6.45E-04	Mn-54	5.78E-03
I-135	7.61E-01	Sr-91	9.99E-02	Nb-95	6.52E-04	Mn-56	3.53E-01
		Sr-92	7.75E-02	Ru-103	1.60E-03	Co-58	1.62E-02
		Mo-99	1.29E-01	Rh-103m	1.61E-03	Co-60	3.27E-02
		Tc-99m	1.25E-01	Ru-106	2.51E-04	Fe-55	8.15E-02
		Te-129m	3.21E-03	Rh-106	2.51E-04	Fe-59	2.48E-03
		Te-131m	4.92E-03	La-140	3.23E-02	Ni-63	---
		Te-132	6.64E-04	Ce-141	2.46E-03	Cu-64	8.96E-01
		Cs-134	2.24E-03	Ce-144	2.51E-04	Zn-65	1.63E-02
		Cs-136	1.42E-03	Pr-144	2.51E-04	Ag-110m	8.13E-05
		Cs-137	6.06E-03			W-187	1.36E-02
		Cs-138	1.64E-02				
		Ba-140	3.10E-02				
		Np-239	5.14E-01				
TOTAL	**2.94E+00**	TOTAL	**1.02E+00**	TOTAL	**2.86E-01**	TOTAL	**2.28E+00**

Table 12.2-15a Solid Radwaste Component Inventories CUW Backwash Receiving Tank

Source volume = 28m^3

Total MBq = 1.94E+08

Halogens		Soluble fission Products		Insoluble fission Products		Activation Products	
Isotope	**MBq**	**Isotope**	**MBq**	**Isotope**	**MBq**	**Isotope**	**MBq**
I-131	2.41E+07	Rb-89	2.82E+04	Y-91	3.66E+05	Na-24	5.01E+06
I-132	3.06E+06	Sr-89	9.40E+05	Y-92	7.37E+05	P-32	1.32E+06
I-133	2.20E+07	Sr-90	7.27E+04	Y-93	1.36E+06	Cr-51	4.99E+07
I-134	2.01E+06	Y-90	7.27E+04	Zr-95	7.41E+04	Mn-54	7.12E+05
I-135	9.52E+06	Sr-91	1.27E+06	Nb-95	7.41E+04	Mn-56	4.44E+06
		Sr-92	9.76E+05	Ru-103	1.73E+05	Co-58	1.87E+06
		Mo-99	4.05E+06	Rh-103m	1.73E+05	Co-60	4.10E+06
		Tc-99m	4.05E+06	Ru-106	3.11E+04	Fe-55	5.41E+06
		Te-129m	3.36E+05	Rh-106	3.11E+04	Fe-59	2.73E+05
		Te-131m	9.27E+04	La-140	2.51E+06	Ni-63	1.03E+07
		Te-132	2.37E+05	Ce-141	2.58E+05	Cu-64	1.22E+07
		Cs-134	1.54E+05	Ce-144	3.09E+04	Zn-65	2.00E+06
		Cs-136	6.44E+04	Pr-144	3.09E+04	Ag-110m	1.00E+04
		Cs-137	4.23E+05			W-187	2.28E+05
		Cs-138	2.07E+05				
		Ba-140	2.51E+06				
		Np-239	1.44E+07				
Total	6.06E+07	Total	2.98E+07	Total	5.85E+06	Total	9.77E+07

Table 12.2-15b Solid Radwaste Component Inventories CF Backwash Receiving Tank

Source volume = 60m^3

Total MBq = 2.59E+03

Halogens		Soluble fission Products		Insoluble fission Products		Activation Products	
Isotope	MBq	Isotope	MBq	Isotope	MBq	Isotope	MBq
I-131	0.00E+00	Rb-89	0.00E+00	Y-91	2.06E+02	Na-24	0.00E+00
I-132	0.00E+00	Sr-89	0.00E+00	Y-92	2.63E+02	P-32	0.00E+00
I-133	0.00E+00	Sr-90	0.00E+00	Y-93	4.88E+02	Cr-51	0.00E+00
I-134	0.00E+00	Y-90	0.00E+00	Zr-95	4.21E+01	Mn-54	0.00E+00
I-135	0.00E+00	Sr-91	0.00E+00	Nb-95	4.21E+01	Mn-56	0.00E+00
		Sr-92	0.00E+00	Ru-103	9.45E+01	Co-58	0.00E+00
		Mo-99	0.00E+00	Rh-103m	9.45E+01	Co-60	0.00E+00
		Tc-99m	0.00E+00	Ru-106	1.87E+01	Fe-55	0.00E+00
		Te-129m	0.00E+00	Rh-106	1.87E+01	Fe-59	0.00E+00
		Te-131m	0.00E+00	La-140	1.14E+03	Ni-63	0.00E+00
		Te-132	0.00E+00	Ce-141	1.37E+02	Cu-64	0.00E+00
		Cs-134	0.00E+00	Ce-144	1.85E+01	Zn-65	0.00E+00
		Cs-136	0.00E+00	Pr-144	1.85E+01	Ag-110m	0.00E+00
		Cs-137	0.00E+00			W-187	0.00E+00
		Cs-138	0.00E+00				
		Ba-140	0.00E+00				
		Np-239	0.00E+00				
Total	0.00E+00	Total	0.00E+00	Total	2.59E+03	Total	0.00E+00

Table 12.2-15c Solid Radwaste Component Inventories Phase Separator

Source volume = 100m^3

Total MBq = 5.10E+08

Halogens		Soluble fission Products		Insoluble fission Products		Activation Products	
Isotope	MBq	Isotope	MBq	Isotope	MBq	Isotope	MBq
I-131	2.41E+07	Rb-89	8.06E+04	Y-91	1.05E+06	Na-24	1.43E+07
I-132	8.75E+06	Sr-89	2.69E+06	Y-92	2.11E+06	P-32	3.76E+06
I-133	6.28E+07	Sr-90	2.08E+05	Y-93	3.90E+06	Cr-51	1.43E+08
I-134	5.74E+06	Y-90	2.08E+05	Zr-95	2.12E+05	Mn-54	2.03E+06
I-135	2.72E+07	Sr-91	3.63E+06	Nb-95	2.12E+05	Mn-56	1.27E+07
		Sr-92	2.79E+06	Ru-103	4.96E+05	Co-58	5.34E+06
		Mo-99	1.16E+07	Rh-103m	4.96E+05	Co-60	1.17E+07
		Tc-99m	1.16E+07	Ru-106	8.89E+04	Fe-55	1.54E+07
		Te-129m	9.61E+05	Rh-106	8.89E+04	Fe-59	7.81E+05
		Te-131m	2.65E+05	La-140	7.17E+06	Ni-63	2.94E+07
		Te-132	6.78E+05	Ce-141	7.37E+05	Cu-64	3.48E+07
		Cs-134	4.39E+05	Ce-144	8.84E+04	Zn-65	5.71E+06
		Cs-136	1.84E+05	Pr-144	8.84E+04	Ag-110m	2.86E+04
		Cs-137	1.21E+06			W-187	6.50E+05
		Cs-138	5.93E+05				
		Ba-140	7.17E+06				
		Np-239	4.10E+07				
Total	1.29E+08	Total	8.53E+07	Total	1.67E+07	Total	2.79E+08

Table 12.2-15d Solid Radwaste Component Inventories Spent Resin Storage Tank

Source volume = 50m^3

Total MBq = 5.72E+06

Halogens		Soluble fission Products		Insoluble fission Products		Activation Products	
Isotope	MBq	Isotope	MBq	Isotope	MBq	Isotope	MBq
I-131	1.48E+06	Rb-89	1.58E+02	Y-91	7.01E+01	Na-24	3.37E+04
I-132	1.53E+05	Sr-89	2.47E+04	Y-92	3.34E+01	P-32	1.43E+04
I-133	1.11E+06	Sr-90	4.45E+03	Y-93	6.21E+01	Cr-51	8.46E+05
I-134	9.88E+04	Y-90	4.45E+03	Zr-95	1.51E+01	Mn-54	3.66E+04
I-135	4.79E+05	Sr-91	8.53E+03	Nb-95	1.51E+01	Mn-56	2.97E+04
		Sr-92	6.52E+03	Ru-103	2.57E+01	Co-58	5.91E+04
		Mo-99	2.75E+04	Rh-103m	2.57E+01	Co-60	2.45E+05
		Tc-99m	2.75E+04	Ru-106	1.12E+01	Fe-55	4.74E+04
		Te-129m	6.52E+03	Rh-106	1.12E+01	Fe-59	6.59E+03
		Te-131m	6.24E+02	La-140	1.73E+02	Ni-63	6.31E+05
		Te-132	1.62E+03	Ce-141	3.32E+01	Cu-64	8.19E+04
		Cs-134	7.28E+03	Ce-144	1.06E+01	Zn-65	9.87E+04
		Cs-136	6.02E+02	Pr-144	1.06E+01	Ag-110m	4.95E+02
		Cs-137	2.35E+04			W-187	1.53E+03
		Cs-138	6.76E+02				
		Ba-140	2.55E+04				
		Np-239	9.69E+04				
Total	3.32E+06	Total	2.67E+05	Total	4.97E+02	Total	2.13E+06

Table 12.2-15e ~~*Solid Radwaste Component Inventories Concentrated Waste Tank*~~
Not Used

Table 12.2-15f ~~*Solid Radwaste Component Inventories Solids Dryer Feed Tank*~~
Not Used

Table 12.2-15g ~~*Solid Radwaste Component Inventories Solids Dryer (Outlet)*~~
Not Used

Table 12.2-15h ~~*Solid Radwaste Component Inventories Solids Dryer Pelletizer*~~
Not Used

Table 12.2-15i ~~*Solid Radwaste Component Inventories Solids Mist Separator (Steam)*~~
Not Used

Table 12.2-15j ~~*Solid Radwaste Component Inventories Solids Condenser*~~
Not Used

Table 12.2-15k ~~*Solid Radwaste Component Inventories Solids Drum*~~
Not Used

Table 12.2-15l Solid Radwaste Component Inventories LW Backwash Receiving Tank

Source volume = 50m^3

Total MBq = 2.33E+6

Halogens		Soluble fission Products		Insoluble fission Products		Activation Products	
Isotope	MBq	Isotope	MBq	Isotope	MBq	Isotope	MBq
I-131	1.36E+05	Rb-89	8.72E+01	Y-91	1.92E+04	Na-24	9.75E+03
I-132	5.40E+03	Sr-89	2.31E+04	Y-92	3.22E+03	P-32	1.23E+04
I-133	4.51E+04	Sr-90	3.65E+03	Y-93	2.83E+03	Cr-51	8.47E+05
I-134	3.39E+03	Y-90	3.65E+03	Zr-95	2.42E+03	Mn-54	3.46E+04
I-135	1.74E+04	Sr-91	2.40E+03	Nb-95	3.42E+03	Mn-56	8.54E+03
		Sr-92	1.71E+03	Ru-103	4.19E+03	Co-58	6.27E+04
		Mo-99	1.16E+04	Rh-103m	4.20E+03	Co-60	2.25E+05
		Tc-99m	1.12E+04	Ru-106	1.55E+03	Fe-55	5.43E+05
		Te-129m	6.57E+03	Rh-106	1.56E+03	Fe-59	7.16E+03
		Te-131m	2.02E+02	La-140	2.44E+04	Ni-63	5.84E+02
		Te-132	7.20E+01	Ce-141	5.50E+03	Cu-64	2.33E+04
		Cs-134	8.68E+03	Ce-144	1.50E+03	Zn-65	8.52E+04
		Cs-136	6.80E+02	Pr-144	1.50E+03	Ag-110m	4.62E+02
		Cs-137	2.52E+04			W-187	5.31E+02
		Ba-137m	2.35E+04				
		Cs-138	3.56E+02				
		Ba-140	2.11E+04				
		Np-239	3.86E+04				
Total	2.08E+05	Total	1.82E+05	Total	7.55E+04	Total	1.86E+06

Table 12.2-20 Airborne Concentrations

Nuclides	Annual Average Airborne per Unit (Site-specific) Release MBq/yr	Concentration MBq/cm^3	Site Wide 10CFR20 Limits MBq/cm^3
Kr-83m	3.10E+01	1.28E-17	1.85E-06
Kr-85m	7.80E+05	3.22E-13	3.70E-09
Kr-85	2.10E+07	8.66E-12	2.59E-08
Kr-87	9.30E+05	3.83E-13	7.40E-10
Kr-88	1.40E+06	5.77E-13	3.33E-10
Kr-89	8.90E+06	3.67E-12	
Kr-90	1.20E+01	4.95E-18	
Xe-131m	1.90E+06	7.83E-13	7.40E-08
Xe-133m	3.20E+03	1.32E-15	2.22E-08
Xe-133	8.90E+07	3.67E-11	1.85E-08
Xe-135m	1.50E+07	6.18E-12	1.48E-09
Xe-135	1.70E+07	7.01E-12	2.59E-09
Xe-137	1.90E+07	7.83E-12	
Xe-138	1.60E+07	6.60E-12	7.40E-10
Xe-139	1.50E+01	6.18E-18	
I-131	9.60E+03	3.96E-15	7.40E-12
I-132	8.10E+04	3.34E-14	7.40E-10
I-133	6.30E+04	2.60E-14	3.70E-11
I-134	1.40E+05	5.77E-14	2.22E-09
I-135	8.90E+04	3.67E-14	2.22E-10
H-3	2.70E+06	1.11E-12	3.70E-09
C-14	3.40E+05	1.40E-13	1.11E-10
Na-24	1.50E+02	6.18E-17	2.59E-10
P-32	3.40E+01	1.40E-17	3.70E-11
Ar-41	2.50E+05	1.03E-13	3.70E-10
Cr-51	1.30E+03	5.36E-16	1.11E-09
Mn-54	2.00E+02	8.24E-17	3.70E-11
Mn-56	1.30E+02	5.36E-17	7.40E-10
Fe-55	2.40E+02	9.89E-17	1.11E-10

Table 12.2-20 Airborne Concentrations (Continued)

Nuclides	Annual Average Airborne per Unit (Site-specific) Release MBq/yr	Concentration MBq/cm^3	Site Wide 10CFR20 Limits MBq/cm^3
Fe-59	3.00E+01	1.24E-17	1.85E-11
Co-58	8.90E+01	3.67E-17	3.70E-11
Co-60	4.80E+02	1.98E-16	1.85E-12
Ni-63	2.40E-01	9.89E-20	3.70E-11
Cu-64	3.70E+02	1.53E-16	1.11E-09
Zn-65	4.10E+02	1.69E-16	1.48E-11
Rb-89	1.60E+00	6.60E-19	7.40E-09
Sr-89	2.10E+02	8.66E-17	3.70E-11
Sr-90	2.60E+00	1.07E-18	2.22E-13
Y-90	1.70E+00	7.01E-19	3.33E-11
Sr-91	3.70E+01	1.53E-17	1.85E-10
Sr-92	2.90E+01	1.20E-17	3.33E-10
Y-91	8.90E+00	3.67E-18	7.40E-12
Y-92	2.30E+01	9.48E-18	3.70E-10
Y-93	4.10E+01	1.69E-17	1.11E-10
Zr-95	5.90E+01	2.43E-17	1.48E-11
Nb-95	3.10E+02	1.28E-16	7.40E-11
Mo-99	2.20E+03	9.07E-16	1.48E-10
Tc-99m	1.10E+01	4.53E-18	7.40E-09
Ru-103	1.30E+02	5.36E-17	3.33E-11
Rh-103m	4.10E+00	1.69E-18	7.40E-08
Ru-106	7.00E-01	2.89E-19	3.70E-12
Rh-106	7.00E-01	2.89E-19	1.48E-09
Ag-110m	7.40E-02	3.05E-20	3.70E-12
Sb-124	6.70E+00	2.76E-18	1.11E-11
Te-129m	8.10E+00	3.34E-18	3.33E-11
Te-131m	2.80E+00	1.15E-18	3.70E-11
Te-132	7.00E-01	2.89E-19	3.70E-11
Cs-134	2.30E+02	9.48E-17	7.40E-12

Table 12.2-20 Airborne Concentrations (Continued)

Nuclides	Annual Average Airborne per Unit (Site-specific) Release MBq/yr	Annual Average Airborne per Unit (Site-specific) Concentration MBq/cm^3	Site Wide 10CFR20 Limits MBq/cm^3
Cs-136	2.20E+01	9.07E-18	3.33E-11
Cs-137	3.50E+02	1.44E-16	7.40E-12
Cs-138	6.30E+00	2.60E-18	2.69E-09
Ba-140	1.00E+03	4.12E-16	7.40E-11
La-140	6.70E+01	2.76E-17	7.40E-11
Ce-141	3.40E+02	1.40E-16	3.70E-11
Ce-144	7.00E-01	2.89E-19	1.48E-12
Pr-144	7.00E-01	2.89E-19	7.40E-09
W-187	7.00E+00	2.89E-18	3.70E-10
Np-239	4.40E+02	1.81E-16	1.11E-10

Table 12.2-21 Gaseous Pathway Doses for Maximally Exposed Individual [1] One Unit (millirem per year)

PATHWAY	T.BODY	GI-TRACT	BONE	LIVER	KIDNEY	THYROID [4]	LUNG	SKIN
PLUME	1.67E-01	1.67E-01	1.67E-01	1.67E-01	1.67E-01	8.63E-02	1.70E-01	4.62E-01
GROUND	2.36E-02	2.36E-02	2.36E-02	2.36E-02	2.36E-02	2.84E-02	2.36E-02	2.77E-02
VEGETABLE								
ADULT [2]	4.09E-02	4.03E-02	1.76E-01	4.41E-02	4.03E-02	8.31E-01	3.43E-02	3.34E-02
TEEN [2]	6.14E-02	6.13E-02	2.84E-01	7.00E-02	6.38E-02	1.05E+00	5.55E-02	5.40E-02
CHILD	1.38E-01	1.35E-01	6.84E-01	1.55E-01	1.44E-01	1.99E+00	1.31E-01	1.29E-01
MEAT								
ADULT	1.33E-02	1.81E-02	6.18E-02	1.38E-02	1.32E-02	3.99E-02	1.24E-02	1.23E-02
TEEN	1.10E-02	1.36E-02	5.21E-02	1.15E-02	1.10E-02	2.97E-02	1.05E-02	1.04E-02
CHILD	2.01E-02	2.11E-02	9.79E-02	2.09E-02	2.02E-02	4.67E-02	1.95E-02	1.94E-02
COW MILK [2]								
ADULT	2.08E-02	1.65E-02	7.36E-02	2.49E-02	2.17E-02	9.77E-01	1.43E-02	1.36E-02
TEEN	3.35E-02	2.84E-02	1.36E-01	4.45E-02	3.90E-02	1.55E+00	2.64E-02	2.49E-02
CHILD	7.21E-02	6.34E-02	3.31E-01	9.34E-02	8.39E-02	3.10E+00	6.31E-02	6.09E-02
INFANT [2]	1.43E-01	1.35E-01	6.43E-01	1.93E-01	1.64E-01	7.52E+00	1.31E-01	1.27E-01
GOAT MILK [3]								
ADULT	3.10E-02	1.60E-02	8.26E-02	3.83E-02	2.70E-02	1.28E+00	1.63E-02	1.40E-02
TEEN	4.33E-02	2.80E-02	1.51E-01	6.79E-02	4.81E-02	2.03E+00	3.01E-02	2.55E-02
CHILD	7.89E-02	6.37E-02	3.71E-01	1.33E-01	9.88E-02	4.05E+00	6.86E-02	6.17E-02
INFANT	1.50E-01	1.31E-01	7.08E-01	2.70E-01	1.89E-01	9.82E+00	1.40E-01	1.28E-01
INHAL								
ADULT	1.62E-03	2.14E-03	8.13E-04	2.41E-03	3.06E-03	7.46E-02	3.67E-03	1.03E-03
TEEN	1.75E-03	2.33E-03	1.13E-03	2.92E-03	3.79E-03	9.76E-02	5.04E-03	1.04E-03
CHILD	1.67E-03	1.76E-03	1.52E-03	2.72E-03	3.46E-03	1.21E-01	4.25E-03	9.18E-04
INFANT	1.03E-03	9.57E-04	1.13E-03	2.10E-03	2.17E-03	1.10E-01	3.05E-03	5.28E-04
SUM OF VIABLE PATHWAYS (CHILD)	3.50E-01	3.48E-01	9.74E-01	3.69E-01	3.58E-01	2.27E+00	3.49E-01	6.39E-01

[1] Site-specific maximally exposed individual for total body and all organs except thyroid is child resident, 2.18 miles WSW of STP3/4.

[2] Adult, teen and infant doses are presented as additional information.

[3] Cow milk and goat milk pathway doses are hypothetical for this location and are presented as additional information only; no milk animals are located within 5 miles of the plant.

[4] Maximally exposed individual for thyroid. Child resident 3.03 miles NNW.

Ground level releases assumed.

Source: GASPAR II calculated pathway doses for locations indicated in footnotes [1] and [4]

Table 12.2-22 Annual Average Liquid Releases

Nuclide	Annual Release (Site-specific) MBq/yr	Concentration (Site-specific) MBq/ml
I-131	3.35E+02	1.75E-13
I-132	7.15E+01	3.75E-14
I-133	1.38E+03	7.23E-13
I-134	4.22E+00	2.21E-15
I-135	4.03E+02	2.11E-13
H-3	2.96E+05	1.55E-10
C-14	0.00E+00	0.00E+00
Na-24	1.87E+02	9.78E-14
P-32	2.10E+01	1.10E-14
Cr-51	6.30E+02	3.30E-13
Mn-54	1.47E+02	7.68E-14
Mn-56	7.55E+01	3.95E-14
Co-56	0.00E+00	0.00E+00
Co-57	0.00E+00	0.00E+00
Co-58	3.10E+02	1.62E-13
Co-60	5.69E+02	2.98E-13
Fe-55	3.50E+02	1.83E-13
Fe-59	8.24E+01	4.31E-14
Ni-63	6.29E+01	3.30E-14
Cu-64	4.67E+02	2.45E-13
Zn-65	1.63E+01	8.53E-15
Rb-89	0.00E+00	0.00E+00
Sr-89	1.16E+01	6.08E-15
Sr-90	9.92E-01	5.19E-16
Y-90	0.00E+00	0.00E+00
Sr-91	4.64E+01	2.43E-14
Y-91	8.70E+00	4.55E-15
Sr-92	1.64E+01	8.58E-15
Y-92	6.27E+01	3.28E-14
Y-93	5.05E+01	2.64E-14
Zr-95	4.10E+01	2.14E-14

Table 12.2-22 Annual Average Liquid Releases (Continued)

Nuclide	Annual Release (Site-specific) MBq/yr	Concentration (Site-specific) MBq/ml
Nb-95	1.16E+01	6.08E-15
Mo-99	9.66E+01	5.06E-14
Tc-99m	2.10E+02	1.10E-13
Ru-103	1.21E+01	6.34E-15
Rh-103m	0.00E+00	0.00E+00
Ru-106	3.29E+02	1.72E-13
Rh-106	0.00E+00	0.00E+00
Ag-110m	4.44E+01	2.32E-14
Sb-124	0.00E+00	0.00E+00
Te-129m	3.12E+00	1.63E-15
Te-131m	3.10E+00	1.63E-15
Te-132	5.00E-01	2.62E-16
Cs-134	4.18E+02	2.19E-13
Cs-136	2.78E+01	1.46E-14
Cs-137	6.57E+02	3.44E-13
Cs-138	2.96E-02	1.55E-17
Ba-140	6.23E+01	3.26E-14
La-140	0.00E+00	0.00E+00
Ce-141	1.10E+01	5.74E-15
Ce-144	1.44E+02	7.56E-14
Pr-144	3.00E+00	1.57E-15
Nd-147	7.40E-02	3.87E-17
W-187	8.24E+00	4.32E-15
Np-239	3.51E+02	1.84E-13

Table 12.2-23 Liquid Pathway Dose Analysis[1] (millirem per year) (One Unit)

Skin	Bone	Liver	Total Body	Thyroid	Kidney	Lung	GI-LLI [2]
2.12 E-4	1.15 E-3	2.92E-4	2.63E-4	2.03 E-4	2.13E-4	2.05 E-4	4.34 E-4

[1] Site-specific liquid pathway MEI is a teenager ingesting fresh water sport fish and receiving shoreline exposure from the Little Robbins Slough.

[2] GI-LLI = Gastrointestinal-lining of lower intestine.

Table 12.2-31 Gaseous Pathway Parameters

Parameter	Value
Release Source Terms	Table 12.2-20
Population distribution	ER Table 2.5-2
Dispersion and deposition factors (χ/q and d/q) [1]	Table 2.3S-27
50-Mile Milk Production (L/yr)	2.13E6 [2]
50-Mile Meat Production (kg/yr)	4.05E7 [2]
50-Mile Vegetable Production (kg/yr)	9.64E6 [2]

[1] Air concentration and deposition per unit release rate.

[2] Animal and vegetable production from 2002 National Census of Agriculture. Production converted to food products using average conversion factors: 21,328 lb-milk/cow, 524 lb beef per cattle/calf, 92.2 lb pork/hog-pig, 61.1 lb meat/sheep, and 8,090 kg vegetables/acre

Table 12.2-32 Gaseous Pathway Consumption Factors for Maximally Exposed Individual

Consumption Factor	Annual Rate			
	Infant	Child	Teen	Adult
Milk consumption (L/yr) [1]	330	330	400	310
Meat consumption (kg/yr) [1]	0	41	65	110
Leafy vegetable consumption (kg/yr) [2]	0	26	42	64
Vegetable consumption (kg/yr) [2]	0	520	630	520

Source: Reference 12.2-12

[1] Cattle are assumed on pasture for 11 months of the year.

[2] Leafy vegetables are assumed grown in the MEI's garden for 11 months of the year; the garden is assumed to supply 76% of the other vegetables ingested annually.

Table 12.2-33 Gaseous Pathway Receptor Locations

Receptor	Direction	Distance (miles)
Site boundary	NNW	0.69
Maximally exposed individual (MEI), total body and all organs but thyroid	WSW	2.18
MEI, thyroid	NNW	3.03

Source: from GASPAR II (Reference 12.2-12) calculations of dose at nearby receptors (receptors given in Reference 12.2-13). Locations of maximum dose reported above.

Table 12.2-34 Liquid Pathway Parameters

Parameter	Value
Release source terms	Table 12.2-22 [1]
Water body flow	600, 97800, 18.3 cubic feet per second [2]
Dilution factor for discharge	1 [3]
Transit time to receptor	1 hour [4]
Impoundment reconcentration model	None [5]
50-Mile population	514,003 [6]
50-Mile sport fishing, invertebrate catch	4.5E4, 1.8E6 kg/yr [7]
50-Mile shoreline usage	7.84E6 person-hours/yr [8]
50-Mile swimming, boating usage	3.92E6 person-hours/yr [9]
Fish consumption	21 kilograms per year [10]
Drinking water consumption	None [11]

[1] Table 12.2-22 gives single unit releases to the main cooling reservoir. Sources to the Colorado River, Matagorda Bay, and Little Robbins Slough are calculated by multiplying the values in Table 12.2-22 by the factors for each water body and nuclide in Table B4-1 of Reference 12.2-13.

[2] Dilution flow rate in Colorado River, Matagorda Bay, and Little Robbins Slough (Reference 12.2-14).

[3] Liquid discharge assumed fully mixed with annual average dilution flows.

[4] 1 hour assumed for transit time from reservoir discharge in all water bodies. This parameter is inconsequential because of residence time in the reservoir.

[5] Completely mixed model used for all water bodies. Reservoir characteristics built into Reference 12.2-13 Table B4-1 factors.

[6] Estimated 2060 population, ER Table 2.5-2.

[7] One-half of fish catch in each of Colorado River and Matagorda Bay. All invertebrate catch in Matagorda Bay (Reference 12.2-13)

[8] One-half at each of Colorado River and Matagorda Bay (Reference 12.2-13)

[9] Each of swimming and boating assumed one-half of shoreline usage.

[10] Adult MEI. 6.9 kilograms per year average (adult population) fish consumption (Reference 12.2-15)

[11] References 12.2-13 and 12.2-14

Table 12.2-35 Comparison of Annual Maximally Exposed Individual Doses with 10 CFR 50, Appendix I Criteria

		Annual Dose	
Type of Dose	**Location**	**ABWR (per unit)**	**Limit**
Liquid effluent	Little Robbins Slough		
Total body (mrem) [5]		2.63E-4 [1]	3
Maximum organ – Bone (mrem)		1.15E-3 [7]	10
Gaseous effluent [2]	Site Boundary		
Gamma air (mrad) [6]		3.30	10
Beta air (mrad)		4.28	20
Total external body (mrem)		3.20	5
Skin (mrem)		7.25	15
Iodines and particulates [3] (gaseous effluents)			
Maximum organ – thyroid (mrem)	MEI	2.19 [4]	15

[1] Teenager using Little Robbins Slough.
[2] North-northwest Site Boundary. Ground level releases assumed.
[3] Includes Tritium and Carbon-14 terrestrial food chain dose (and inhalation dose for calculation ease and conservatism), consistent with Table 1 of Reference 12.2-16.
[4] Child eating home grown meat and vegetables. Difference between Tables 12.2-21 and 12.2-35 thyroid dose is 0.087 millirem per unit from noble gases in the plume.
[5] One-one thousandth of a rem (roentgen equivalent man). For gamma and beta exposure, one mrem = one mrad.
[6] One-one thousandth of a rad (radiation absorbed dose), or 0.1 ergs per gram of, biological mass.
[7] Child using Little Robbins Slough.

Source: GASPAR II and LADTAP II calculated doses.

Table 12.2-36 Comparison of Pathway Bounding Maximally Exposed Individual Doses with 10 CFR 20.1301(e) Criteria [1] – (millirem per year)

		Units 3 and 4 (ABWR)			Units 1 and 2 (Existing) [6]				
	Direct Radiation	Liquid	Gaseous	Total	Liquid	Gaseous	Total	Site Total	Regulatory Limit
Total body	5.0	0.00053 [2]	0.70 [4]	5.70	0.0042	0.0080	0.012	5.71	25
Thyroid	NA	0.00041 [2]	4.54 [5]	4.54	0.0041	0.0097	0.014	4.55	75
Other organ - bone	NA	0.0023 [3]	1.94 [4]	1.94	0.00077	0.0011	0.0019	1.94	25

[1] Compliance with 40 CFR 190 specified in 10 CFR 20.1301(e).

[2] Teenager using Little Robbins Slough for shoreline activities and fishing.

[3] Child using Little Robbins Slough for shoreline activities and fishing.

[4] Residence with meat animal and vegetable garden, dose to child, 2.18 miles WSW of new units.

[5] Residence with meat animal and vegetable garden, dose to child, 3.03 miles NNW of new units.

[6] References 12.2-12, 12.2-14, and 12.2-15. Same receptor locations as STP 3 & 4.

Table 12.2-37 Activity in the Condensate Storage Tank[1]

Source Volume = 2110m^3

Total MBq = 8.08E+03

Halogens		Soluble fission Products		Insoluble fission Products		Activation Products	
Isotope	**MBq**	**Isotope**	**MBq**	**Isotope**	**MBq**	**Isotope**	**MBq**
I 131	1.31E+03	Rb 89	7.16E+01	Y 91	3.95E+01	Na 24	5.11E+01
I 132	5.51E+02	Sr 89	8.23E+00	Y 92	1.15E+01	P 32	6.87E+00
I 133	3.05E+03	Sr 90	5.38E-01	Y 93	2.00E+00	Cr 51	2.62E+02
I 134	3.61E+02	Y 90	4.58E-01	Zr 95	7.68E+00	Mn 54	3.86E+00
I 135	1.61E+03	Sr 91	1.40E+01	Nb 95	7.95E+00	Mn 56	2.77E+01
		Sr 92	1.17E+01	Ru 103	1.77E+01	Co 58	8.20E+00
		Mo 99	2.93E+01	Rh 103m	1.78E+01	Co 60	2.50E+01
		Tc 99m	2.83E+01	Ru 106	3.74E+00	Fe 55	1.48E+01
		Te 129m	1.73E+00	Rh 106	3.74E+00	Fe 59	7.88E-01
		Te 131m	8.14E-01	La 140	1.08E+02	Ni 63	7.62E-02
		Te 132	4.41E-01	Ce 141	2.56E+01	Cu 64	1.27E+02
		Cs 134	6.18E+00	Ce 144	3.66E+00	Zn 65	1.31E+01
		Cs 136	1.81E+00	Pr 144	3.66E+00	Ag 110m	4.27E-02
		Cs 137	1.91E+01			W 187	2.07E-01
		Ba 137m	1.78E+01				
		Cs 138	5.93E+01				
		Ba 140	1.32E+01				
		Np 239	1.08E+02				
Total	**6.89E+03**	**Total**	**3.93E+02**	**Total**	**2.52E+02**	**Total**	**5.42E+02**

Note:
1) The H-3 source term value is 7.77E+05 MBq.

12.3 Radiation Protection Design Features

The information in this section of the reference ABWR DCD, including all subsections, tables, and figures, is incorporated by reference with the following departures and supplements.

STD DEP T1 2.14-1 (Figures 12.3-5, 12.3-10, 12.3-16 and 12.3-21)

STD DEP T1 3.4-1

STD DEP 1.2-2 (Table 12.3-7, and Figures 12.3-49 thru 12.3-53, 12.3-55, 12.3-68 thru 12.3-73, and 12.3-75 thru 12.3-77)

STD DEP 1.8-1

STP DEP T1 2.5-1

STD DEP 3.8-1 (Table 12.3-7, and Figures 12.3-37 thru 12.3-41, 12.3-65 thru 12.3-68)

STP DEP 9.4-1

STD DEP 11.5-1

STD DEP 12.3-1

STD DEP 12.3-3

STD DEP 12.3-4 (Tables 12.3-3, 12.3-6 and 12.3-7, and Figures 12.3-56 thru 12.3-58, 12.3-60 and 12.3-62)

STD DEP Admin (Figures 12.3-1, 12.3-3, 12.3-6 and 12.3-74)

12.3.1 Facility Design Features

STD DEP Admin

The ABWR Standard Plant is designed to meet the intent of Regulatory Guide 8.8 (i.e., to keep radiation exposures to plant personnel as low as reasonably achievable (ALARA)). This section describes the component and system designs, in addition to the equipment layout, employed to maintain radiation exposures ALARA. Where possible, consideration of individual systems is provided to illustrate the application of these principles. ~~Owing to the ABWR being a standard plant, specific details as to precise equipment definition are not available and are to be provided by the COL applicant during the final design detail stage.~~ To insure that the plant as designed meets all applicable radiation criteria, a two-step process is then applied where design details not included in this document are then subject to review and confirmation in accordance with radiation protection criteria. Therefore, the details in this section serve as input to the final design configuration and serve to determine the adequacy of the design with respect to radiation protection.

12.3.1.1.2 Material Selection

STD DEP 12.3-1

In the ABWR design maintaining radiation exposure ALARA has been considered in the material selection of systems and components exposed to reactor coolant. For example, radiation exposure potential has been reduced appreciably through the removal or reduction of cobalt from many components as compared to current BWR fleet. Much of the cobalt is removed from contact with reactor coolant by eliminating Stellite where practical and reducing cobalt in the core stainless steel components. ~~*The cost of using very low cobalt materials through out the plant is prohibitive with the cost of 0.02 wt percent cobalt stainless steel approximately 8 times that of 0.05 wt percent stainless steel. Therefore, the*~~ The *ABWR design has taken a graded approach* to using various grades of low cobalt stainless steel, *by using the* ~~*most expensive though*~~ *lowest cobalt bearing materials in the most radiologically significant areas with increasing cobalt content in less sensitive areas. The ABWR standards for cobalt are: 0.02 wt percent for those items in the core; 0.03 wt percent for those items in the vessel internals; and 0.05 wt percent for all other components. Also, with the current materials, there are no proven substitutes for Stellite for many hard surface applications shuch as MSIV seats. Current efforts by the nuclear and metallurgical industry indicate that in the future, practical alternatives to Stellite maybe feasible and are being researched.*

~~*The COL applicant shall address material selection of systems and components exposed to reactor coolant to maintain radiation exposures ALARA. See Subsection 12.3.7.4 for COL license information requirements.*~~ These cobalt contents are target values for reduced occupational exposure per ALARA principles and are not specifications.

The estimation of occupational exposure for the ABWR, was generated by reviewing current plant work records and practices at operating BWRs, and taking into account distinct plant features in the ABWR. An estimate of the average annual occupational exposure was made during the US Standard ABWR certification work. It is noted that the reduced cobalt loadings (i.e. target values) were not considered in the estimation. Therefore, based upon the methods used and assumptions made in evaluating occupational exposure, the materials procured with 0.05 wt percent maximum cobalt have no adverse effect on the estimated occupational exposure.

12.3.1.4.1 Reactor Water Cleanup (CUW) System

The CUW System is provided with chemical cleaning connections which can utilize the condensate system to flush piping and equipment prior to maintenance. The CUW filter/demineralizers can be remotely backflushed to remove spent resins and filter aid material. If additional decontamination is required, chemical addition connections are provided in the piping to clean piping as well as equipment prior to maintenance. The backwash tank employs an arrangement to agitate resins prior to discharge. The tank vent is fitted with a charcoal filter canister to reduce emission of radioiodines into the plant atmosphere. The HVAC System is designed to limit the spread of contaminants

from these shielded cubicles by maintaining a negative pressure in the cubicles relative to the surrounding areas.

12.3.1.4.4 Main Steam System

STD DEP 12.3-3

Penetrations through the steam tunnel walls are minimized to reduce the streaming paths made available by these penetrations. ~~The blowout panels for the steam tunnel are located in the relatively inaccessible upper section of the RHR heat exchanger shielded cubicles which are controlled access areas.~~ Penetrations through the steam tunnel walls, when they are required, are located so as to exit in controlled access areas or in areas that are not aligned with the steamlines. A lead-loaded silicone foam or equivalent *is employed whenever possible for these penetrations to reduce the available streaming area presented.*

12.3.2.2.2 Method of Shielding Design

The following site specific supplement provides information to address the methods used to determine shield parameters:

As provided in Tier 1 ITAAC Table 3.2a, commonly accepted shielding codes using nuclear properties derived from well known references shall be used to model and evaluate plant radiation environments.

The DIJESTER computer code is used to assist in determination of the activity in the components of the radwaste system. It is basically a bookkeeping program, which keeps track of each nuclide as it is processed through the pipes, tanks, filters, demineralizers, etc., that make up the radwaste system. It couples the rate equations that govern the operation of the various components of the radwaste system with radionuclide decay chains to model the buildup and decay of the radionuclide activity in each component. This is not a shielding design code of the types described in the DCD and is not used to calculate dose rates. Its purpose is limited to determining the source in the components of the radwaste system, and the use of the code is consistent with the description of the source term in the DCD.

Per Section 12.3.2.2.2.2 of the reference ABWR DCD, pure gamma dose rate calculations are conducted using point kernel codes. The point kernel codes used are those that are presently widely used in the nuclear industry and include codes such as QAD-CGGP, QAD-CGGP-A, MicroShield, ISOSHLD and G33-GP. For combined gamma and neutron shielding situations, discrete ordinates or Monte Carlo techniques are applied. Typical codes used for this application include the discrete ordinates code DORT and the Monte Carlo code MCNP. Where shielded entries to high radiation areas such as labyrinths are required, a gamma ray scattering code such as G33-GP or a Monte Carlo code such as MCNP is used to confirm the adequacy of the labyrinth design. These computer codes, along with the computer codes identified in the DCD and, when they become available, updated computer codes using similar techniques, are used to design the shielding for STP 3 & 4.

12.3.2.3 Plant Shielding Description

STP DEP 1.2-2

STD DEP 1.8-1

STD DEP 12.3-3

(6) The main steam tunnel extends from the primary containment boundary in the Reactor Building through the Control Building up to the turbine stop valves. The primary purpose of the steam tunnel is to shield the plant complex from N-16 gamma shine in the main steamlines. A minimum of 1.6 meters of concrete or its equivalent (other material or distance) is required on any ray pathway from the main steamlines to any point which may be inhabited during normal operations. The design of the steam tunnel is shown on Figures 1.2-14, 1.2-15, 1.2-20, 1.2-21, and 1.2-33*~~1.2-28~~. The tunnel is classified as Seismic Category I in the Reactor Building and in the Control Building and is designed to* IBC*~~UBC~~ Seismic Standards in the Turbine Building. The interface between the buildings provides for bayonet connection to permit differential building motion during seismic events and shielding in the areas between buildings. The exact details on the bayonet design are not shown on the referenced arrangement drawings but requires complete shielding in the building interface area.~~ The tunnel also serves a secondary purpose as a relief and release pathway for high energy events in the Reactor Building. Any high energy event (line break) in the Reactor Building will, through a series of blow out panels, vent into the steam tunnel and from the steam tunnel through the tunnel vent shaft to the Turbine Building (Figure 1.2-28) for processing to the plant stack. See Subsection 6.2.3.3.1 for more complete description of this function.~~*

12.3.3.2.1 Control Room Ventilation

STD DEP Admin

Outside air coming into the intakes is normally filtered by a particulate filter. If a high radiation level in the air is detected by the ~~Airborne~~ Process *Radiation Monitoring System, flow is automatically diverted to another filter train (an outdoor air cleanup unit) that has:*

(1) A *~~particular~~* particulate *filter*

(2) A HEPA filter

(3) A charcoal filter

(4) Another HEPA filter

The outdoor cleanup units are located in individual, closed rooms that help prevent the spread of any radiation during maintenance. Adequate space is provided for maintenance activities. The particulate and HEPA filters can be bagged when being

removed from the unit. Before removing the charcoal, any radioactivity is allowed to decay to minimal levels, and is then removed through a connection in the bottom of the filter by a pneumatic transfer system. Air used in the transfer system goes through a HEPA filter before being exhausted, or equivalent. Face masks can be worn during maintenance activities, if desired.

12.3.3.2.4 Radwaste Building

Subsection 12.3.3.2.4 has been replaced in its entirety with the following standard departure.

STP DEP 9.4-1

The Radwaste Building HVAC is described in detail in subsection 9.4.6.

The radwaste building ventilation systems are engineered and designed to provide the proper environmental conditions within all areas of the radwaste building during normal plant operation. The radwaste building ventilation systems include:

- Radwaste building process area HVAC system.
- Radwaste control room HVAC system.
- Non-Class IE electrical, and HVAC equipment rooms ventilation system.

From a radiological perspective the system is designed to:

- Provide an environment with controlled temperature and airflow patterns to ensure the comfort and safety of plant personnel and to allow for the continuous operation of the equipment and components.
- Maintain positive pressure within the radwaste control room, electrical room and other areas not containing radioactive materials.
- Limit exfiltration from the radwaste areas with potential airborne radioactive contaminants by maintaining sub atmospheric pressure during the normal plant operation.
- Maintain airflow from areas of low potential radioactivity to areas of progressively higher potential radioactivity.
- Limit airborne fission product release to the atmosphere from the ventilation system exhaust during normal plant operation.
- Limit concentration of airborne radioactivity to levels below the values specified in Appendix B to 10CFR20.

Exhaust air from the Radwaste Building is routed to and exhausted through the plant stack. Upon radiation detection in the main exhaust duct, the exhaust air is automatically routed to the air filtration equipment to be filtered through a prefilter and

a HEPA filter before being released through the plant stack. A high level of radioactivity detected by a radiation monitor downstream of the HEPA filter also activates an alarm in the radwaste and the main control rooms.

12.3.4 Area Radiation and Airborne Radioactivity Monitoring Instrumentation

STD DEP 11.5-1

(2) The Containment Atmospheric Monitoring System (D23/CAM) continuously measures, indicates, and records the gamma radiation levels within the primary containment (drywell and suppression chamber), and activates alarms in the main control room on high radiation levels. As described in Subsection 7.6.2, four gamma sensitive ion chamber channels are provided to monitor gamma radioactivity in the primary containment during normal, abnormal and accident conditions. Each of the four monitoring channels covers the range from 10^{-2} Sv/h~~Gy/h~~ to 10^{5} Sv/h~~Gy/h~~. The CAM System is classified as safety-related.

12.3.4.1 ARM System Description

STD DEP T1 3.4-1

The Area Radiation Monitoring (ARM) System consists of gamma sensitive detectors, digital area radiation monitors, local auxiliary units with indicators and local audible warning alarms, and recording devices. The detector signals are ~~digitized and optically multiplexed for transmission~~ transmitted *to the radiation monitors in the main control room. Each ARM radiation channel has two independently adjustable trip alarm circuits, one is set to trip on high radiation and the other is set to trip on downscale indication (loss of sensor input). Also, each ARM monitor is equipped with self-test feature that monitors for gross failures and will activate an alarm on loss of power or when a failure is detected. Auxiliary units with local alarms are provided in selected local areas for radiation indication and for activating the local audible alarms on abnormal levels. Each area radiation channel is powered from the non-Class 1E vital 120 VAC source, which is continuously available during loss of offsite power. The recording devices are powered from the 120 VAC instrument bus.* The ARMs are calibrated in accordance with procedures developed from calibration instructions provided by the manufacturer. Periodic calibration verification and channel functional tests are performed with procedures based on pre-operational acceptance testing to verify operability, including alarm functions.

12.3.4.2 ARM Detector Location and Sensitivity

STD DEP 11.5-1

The location of each area detector is shown on the plant layout drawings for each building (Figures 12.3-56 through 12.3-73). The specific area radiation channels for each building are listed in Tables 12.3-3 through 12.3-7, along with reference to map location of the detector, the channel sensitivity range, and the areas for the local alarms. The range and sensitivity of each area radiation channel is classified as follows:

(1) Range 0.10 µSv/h~~µGy/h~~ to 1 mSv/h~~mGy/h~~ -H (High Sensitivity)

(2) Range 1 µSv/h~~µGy/h~~ to 10 mSv/h~~mGy/h~~ -M (Medium Sensitivity)

(3) Range 10 µSv/h~~µGy/h~~ to 10^2 mSv/h ~~mGy/h~~ -L (Low Sensitivity)

(4) Range 1 mSv/h~~mGy/h~~ to 10 Sv/h~~Gy/h~~ -LL (Low Low Sensitivity)

(5) Range 1 mSv/h~~mGy/h~~ to 10^2 Sv/h~~Gy/h~~ -VL (Very Low Sensitivity)

12.3.4.3 Pertinent Design Parameters and Requirements

STP DEP T1 2.5-1

Two high-range radiation channels are provided to monitor radiation from accidental fuel handling. One detector is positioned near the fuel pool and the other located in the fuel handling area. Criticality detection monitors are not needed to satisfy the criticality accident requirements of 10CFR70.24, when specialized high density fuel storage racks preclude the possibility of criticality accident under normal and abnormal conditions. The new and ~~*fuel bundles are stored in racks that are located in the fuel vault while the*~~ *spent fuel bundles are stored in racks that are placed at the bottom of the fuel storage pool. A full array of loaded fuel storage racks are designed to be subcritical, as defined in Sections 9.1 and 9.2. The COL applicant must verify and certify that the design meets the criteria specified in Subsection 12.3.7.3.*

12.3.7 COL License Information

12.3.7.1 Airborne Radionuclide Concentration Calculation

The following site specific supplement addresses COL License Information Item 12.6.

Calculations of the expected airborne radionuclide concentrations are performed, as part of the plant inspections, tests, analyses and acceptance criteria (ITAAC Tier 1 Table 3.2b), to verify the adequacy of the ventilation system prior to fuel load.

12.3.7.2 Operational Considerations

The following site specific supplement addresses COL License Information Item 12.7.

Alarm setpoints are established based on design background radiation levels, which are then, confirmed during the Startup Test Program. The Preoperational Test Program will check for proper calibration of the detectors, and then check the proper functioning of alarms (local and remote, audible and visual) and protective features including alarm setpoints. The Preoperational Test Program will also check for proper response to various loss of power conditions.

In addition to the Area Radiation Monitoring system, radiation monitoring operational considerations, such as procedures for placement, operation and calibration of portable monitors, are established in accordance with the Operational Radiation Protection Program described in Section 12.5S.

The ARMs and airborne radioactivity monitors are calibrated using one or more reference standards, such as ANSI/ANS 6.8.1 with radioactive sources traceable to the National Institute for Standards and Technology (NIST). The instruments are calibrated at one or more points within the response range. A channel calibration that includes a channel functional test is performed periodically on the non safety-related area monitors. A channel calibration that includes a channel functional test is performed on the safety-related area monitors at least once every 18 months or during the refueling outage if the detector is not readily accessible. In the event a calibration is questionable, the channel can be isolated and a more thorough calibration performed. Calibration is also performed after maintenance or replacement of any components that could affect calibration.

12.3.7.3 Requirements of 10CFR70.24

The following site specific supplement addresses COL License Information Item 12.8.

The information demonstrating that the plant meets the criticality accident monitoring requirements of 10CFR70.24 will be provided by meeting the requirements of 10 CFR 50.68(b), as provided for in 10 CFR 70.24(d)(1).(COM 12.3-1).

12.3.7.4 Material Selection

The following site specific supplement addresses the unnumbered COL License Information Item contained in this section of the reference ABWR DCD.

STPNOC continues to monitor industry state-of-the-art developments in material selection options for maintaining exposure ALARA, including Stellite reduction efforts. A graded approach to using the various levels of cobalt in the primary systems has been undertaken as discussed in Subsection 12.3.1.1.2.

12.3.8 Radiation Exposure to Construction Workers During Plant Construction

The following site specific supplement provides information to address RG 1.206, CIII Subsection 12.3.5, dealing with dose to construction workers for multi-unit sites.

Regulatory Guide 1.206, Section C.III.12.3.5, states in part, for multi unit sites, the COL applicant will provide estimated annual dose to construction workers in a new construction area, as a result of radiation from on-site radiation sources from the existing operating plant(s).

During the construction of STP 3 & 4, workers will be exposed to several potential sources of radiation. This section identifies the potential sources of radiation and estimates the doses that workers would receive during the construction of STP 3 & 4 due to the operation of STP 1 & 2. In addition, with STP 3 scheduled to be operational one year earlier than STP 4, STP 3 will be a source of radiation for STP 4 construction workers during that year. Thus, the dose contribution from STP 3 sources of radiation is also evaluated.

Three types of sources are considered: direct radiation, gaseous effluents, and liquid effluents. The maximum annual doses from all three pathways during any year of the

construction of STP 3 & 4 occur during the year that STP 3 is operational and STP 4 is under construction. This is further discussed later in this subsection. A comparison of these calculated doses for this time period shows that the limits in 10 CFR 20.1301 and 40 CFR 190.10 for members of the public are satisfied. For 10 CFR 20.1301 the calculated annual dose is 18 mrem TEDE and the limit is 100 mrem TEDE.

Annual Doses for Individuals Working on Unit 4

	Worker Annual Dose (mrem)	
	From Unit 3	**From Units 1, 2 & 3**
Whole body dose from liquid effluents	0.00026	0.032
Organ dose from liquid effluentst	0.00043	0.032
Whole body dose from gaseous effluents	6.6	8.3
Skin dose from gaseous effluents	16	17
Organ dose from radioactive iodine and radioactive material in particulate form from gaseous effluents	12	18

These calculated doses assume a full power equilibrium core with power history for the entire year. It is not expected that Unit 3 will be at 100% power during the full year that STP 4 is still under construction. During this period, STP 3 will be undergoing startup testing. Full power operation is likely to occur only for about 25% of this first year, resulting in decreased annual doses from those presented in the table.

The STP 3 & 4 site will be continually monitored during the construction period and appropriate actions taken to ensure that doses to the construction workers remain ALARA. In addition, the Operational Radiation Protection Program described in Section 12.5S will be in place while Unit 3 is operating with Unit 4 still under construction. Thus, there will be ample oversight to ensure that doses to construction workers remain ALARA during the construction period.

The bases, assumptions, and methods used to calculate the construction worker dose are given below with the maximum annual dose (person-Sieverts) shown in Table 12.3-8.

Dose rates at the construction site are estimated based on dose rate measurements and calculations. Although the construction workers will occupy a large area over the course of the construction period, dose rates are estimated based on average distances from radiation sources.

- Direct radiation: The direct radiation dose rates from STP 1 & 2 sources are based on TLD measurements taken at various onsite locations from 2002 through 2006. This 5-year period provides sufficient data to be representative of plant conditions. Since the construction location for STP 3 & 4 is farther away from STP 1 & 2 than are the respective TLD stations where dose rates are measured from each source, the STP 1 & 2 Offsite Dose Calculation Manual (ODCM) is used to extrapolate the dose rates from the TLD locations to the STP 3&4 location. In determining direct radiation dose rates, it is assumed that the worker is located in the center of the construction area of the unit (either STP 3 or 4) nearest to the source. Given that workers will move about the construction area over the course of a year, it is reasonable to select the center of the area as a representative location for occupancy. No credit is taken for any shielding provided by structures under construction. The estimated total body dose rate to Units 3 and 4 construction workers due to operation of Units 1 and 2 is 2.4 mrem/yr. The estimated total body dose rate to Unit 4 construction workers due to operation of Units 1, 2 and 3 is 9.3 mrem/yr.

- Gaseous effluents: The annual dose rates from the release of gaseous effluents to the maximally exposed member of the public are based on the STP 1 & 2 REMPs for 2002 to 2006. The composite maximum annual dose rate for each organ over these 5 years was calculated using the methodology found in the STP 1 & 2 ODCM. These offsite dose rates are used to estimate construction worker doses. The ratio of the total body dose onsite to that offsite was used to estimate the organ doses onsite for the years 2002 through 2006, yielding the maximum annual onsite doses to construction workers from STP 1&2 over the five-year period. This maximum dose was doubled to address measurement uncertainty. Using the atmospheric dispersion factors in FSAR Section 2.3, the estimated total body dose rate to construction workers from operation of Units 1&2 is 1.7 mrem/yr and 6 mrem/yr to the critical organ and operation of Units 1,2 and 3 is 8.3 mrem/yr total body dose rate and 18 mrem/yr to the critical organ.

- Liquid effluents: The annual dose rates from release of liquid effluents to the maximally exposed member of the public are due to sport fish ingestion and shoreline exposure. Although construction workers would not be exposed to these pathways at the construction site, it was conservatively assumed that the construction workers receive the same doses as the maximally exposed member of the public. Furthermore, the doses are doubled to address measurememt uncertainty. These liquid effluents are based on the STP 1 & 2 REMPs for 2002 to 2006. The composite maximum annual dose rate for each organ over these 5 years was calculated using the methodology found in the STP 1 & 2 ODCM. The offsite dose rates from STP 1, 2, and 3 are calculated at the Little Robbins Slough area due to sport fish ingestion and shoreline exposure. These dose rates are used to estimate construction location doses. The estimated total dose rate to construction workers from operation of Units 1,2 and 3 is 0.032 mrem/yr to both total body and the critical organ.

The calculated annual person-Sievert construction worker doses for total body and critical organ are provided in Table 12.3-8. For the calculation, the manpower

estimates are for the timeframe when construction on both Units 3 and 4 is in progress for both units, as it is not feasible to break down the workforce estimates by unit. The estimated doses for each of the three construction phases shown in the table are based on the maximum average annual workforce during that phase.

12.3.9 Minimization of Contamination

The following site-specific supplement provides information to address 10 CFR 20.1406, as implemented by NEI 08-08A.

As stated in Section 12.3 of the Design Control Document (DCD), The Advanced Boiling Water Reactor (ABWR) incorporates many Radiation Protection design features to limit contamination. Section 12.3 of the DCD is incorporated by reference and provides the features summarized below, among others:

- Pumps located in radiation areas are provided with flush lines and in certain cases chemical cleaning capabilities for use prior to maintenance. Pump casing drains provide a means for draining pumps to the sump prior to disassembly, thus reducing the exposure of personnel and decreasing the potential for contamination.

- Instrumentation lines in liquid service for systems containing radioactive fluids are provided with vent and backflush provisions. Reactor vessel sensing lines may be flushed with condensate following reactor blowdown.

- Heat exchangers are constructed of stainless steel or Cu/Ni tubes to minimize the possibility of failure. The heat exchanger design allows for complete draining of fluids from the exchanger, and connections are available for condensate or demineralized water flushing.

- Valves have back seats to minimize leakage through the packing. Teflon gaskets are not used.

- Piping was selected to provide a service life equivalent to the design life of the plant, with consideration given to corrosion allowances and environmental conditions. Piping for systems containing radioactive fluids is welded to the most practical extent to reduce leakage through flanged or screwed connections.

- Floor drains with appropriately sloped floors are provided in shielded cubicles where the potential for spills exist. Smooth, epoxy-type coatings are employed to facilitate decontamination when a spill does occur. Curbs are provided to limit contamination and simplify washdown operations, and expanded metal-type floor gratings are minimized in favor of smooth surfaces in areas where radioactive spills could occur. Equipment and floor drain sumps are stainless steel lined to preclude leakage.

- Material selection consideration is used for systems and components exposed to reactor coolant. Specifically, a graded approach to the use of cobalt lowers the potential for the spread of contamination. Much of the cobalt is removed from

contact with reactor coolant by eliminating Stellite where practical and reducing cobalt in the core stainless steel components.

- Sample stations in the plant contain flushing provisions using demineralized water, and sample station piping drains to plant sumps minimize the possibility of spills. Fume hoods are employed for airborne contamination control. Working areas and fume hoods are stainless steel to ease decontamination should a spill occur, and sample spouts are located above the sink to reduce the possibility of contaminating surrounding areas during the sampling process.

- HVAC systems are designed to limit the extent of airborne contamination by providing air flow patterns from areas of low contamination to more contaminated areas. HVAC Equipment drain sump vents are fitted with charcoal canisters or are piped directly to the Radwaste HVAC System to remove airborne contaminants evolved from discharges to the sump. HVAC penetrations through outer walls of buildings containing radioactive sources are sealed to prevent miscellaneous leaks into the environment.

Additionally, all below grade piping carrying radioactive fluids is located in tunnels. No direct buried piping containing radioactive fluids is incorporated in the STP 3 & 4 design.

Nuclear Energy Institute Report 08-08A, “Generic FSAR Template Guidance for Life Cycle Minimization of Contamination” provides the Minimization of Contamination Program for STP 3 & 4. This NEI template is incorporated by reference with the clarification that design changes for certified design materials are not required by implementation of this program. The evaluations, programs, and procedures required by NEI 08-08A will be issued six months prior to commencement of the Preoperational Test Program.

12.3.9.1 Operational Programs and Operating Procedures

Operational programs and operating procedures will be developed to address 10 CFR 20.1406, and will be issued six months prior to commencement of the Preoperational Test Program. These programs and procedures will include:

- Work practices, preventive maintenance, and procedures to minimize leaks and spills and provide containment and early and adequate detection including instruments for detection. This includes surveillance and monitoring.

- Surveillance and maintenance is performed to mitigate the consequences of undetected leakage over a long period of time.

- Operational practices will be documented such that they are subject to audit and inspection.

- Following construction, establishment of an onsite monitoring program as a part of the environmental monitoring program to prevent offsite migration of radionuclides via an unmonitored pathway.

- To facilitate decommissioning, maintain a system of records detailing contamination events and residual levels of environmental contaminates for the life of the facility, readily accessible to facilitate cleanup.

- Minimizing the generation of radioactive waste as a major operational consideration that will be addressed through careful work planning. Plant procedures will include provisions for proper packaging of wastes for transportation and acceptance by disposal or treatment facilities. Onsite storage is considered in certain circumstances as necessary.

Maintenance and other operating procedures are provided in Subsection 13.5.3.4.2, which includes plant radiation protection, chemical-radiochemical control, and radioactive waste management procedures. Subsection 13.5.3.4.3 lists radiation control procedures, including area radiation monitoring, process radiation monitoring, and meteorological monitoring procedures as well as procedures for discharge of effluents. Operational programs are listed in Table 13.4S-1, and included the Process and Effluent Monitoring and Sampling Program and Radiation Protection Program. 10 CFR 20.1406 requirements are considered in the development of these programs.

12.3.9.2 Design Provisions and Design Features

Design of structures, systems, and components, such as the following, outside the scope of ABWR DCD or departures from the DCD in COLA Part 2, Tier 2, are applicable to 10CFR20.1406 and RG 4.21.

- Section 12.3 describes facility radiation protection design features with STD DEP 12.3-4 adding ARMs and alarm capability.

- Section 12.5 provides supplemental information related to radiation protection facilities and equipment.

- Sections 11.5 and 12.0 describe process and effluent radiological monitoring systems with STD DEP 11.5-1 providing for equipment and instrumentation reliability improvements.

- Section 11.4 describes the solid waste management system and processes with STD DEP 11.4-1 to minimize the generation of waste.

- Section 11.3 describes the gaseous waste management system with STD DEP 11.3-1 providing for optimization.

- Section 11.2 describes the liquid radwaste management system with STD DEP 11.2-1 providing for equipment modernization.

12.3.10 References

STD DEP Admin

12.3-1 N. M. Schaeffer, “Reactor Shielding for Nuclear Engineers”, TID-25951, U.S. Atomic Energy Commission (1973).

12.3-2 J. H. Hubbell, “Photon Cross Sections, Attenuation Coefficients, and Energy Absorption Coefficients from 10 KeV to 100 GeV”, NSRDS-NBS 29, U.S. Department of Commerce, August 1969.

12.3-3 “Radiological Health Handbook”, U.S. Department of Health, Education, and Welfare, Revised Edition, January 1970.

12.3-4 “Reactor Handbook”, Volume III, Part B, E.P. Blizzard, U.S. Atomic Energy Commission (1962).

12.3-5 Lederer, Hollander, and Perlman, “Table of Isotopes”, Sixth Edition (1968).

12.3-6 M.A. Capo, “Polynomial Approximation of Gamma Ray Buildup Factors for a Point Isotropic Source”, APEX-510, November 1958.

12.3-7 Reactor Physics Constants, Second Edition, ANL-5800, U.S. Atomic Energy Commission, July 1963.

12.3-8 ENDF/B-III and ENDF/B-IV Cross Section Libraries, Brookhaven National Laboratory.

12.3-9 PDS-31 Cross Section Library, Oak Ridge National Laboratory.

12.3-10 DLC-7, ENDF/B Photo Interaction Library.

Table 12.3-3 Area Radiation Monitors Reactor Building

No.	Location & Description	Figure #	Sensitivity Range	Local Alarms
2	Reactor area (B)-4F	12.3-62	LL	X
4	Fuel storage pool area (B)-4F	12.3-62	LL	X
5	R/B 4F south area	12.3-62	H	X
7	R/B 3F NW area	12.3-60	H	X
9	CUW control panel area-B3F	12.3-56	H	X
14	R/B 1F SE hatch area	12.3-59	H	X
17	R/B B1F SE hatch area	12.3-58	H	X
26	R/B B3F SW area-RHR “C” equip area	12.3-56	H	X
27	R/B Operating Deck C	12.3-62	H	X
28	R/B Corridor D	12.3-57	M	X
29	R/B Cask Pil	12.3-60	M	X
30	R/B Sampling Room	12.3-58	M	X

Table 12.3-6 Area Radiation Monitors Radwaste Building

No.	Location and Description	Figure #	Sensitivity Range	Local Alarms
1	Electrical Equipment Room El 12300	12.3-67	H	X
2	Control Room El 12300	12.3-67	H	X
3	High Activity Spent Resin Tank Room Tank A El 5300	12.3-66	H	X
4	High Activity Spent Resin Tank Room Tank B El 5300	12.3-66	H	X
5	Trailer Access Area El 12300	12.3-67	H	X
6	LRW Mobile Skid Area El 12300	12.3-67	H	X
7	DAW & Wet Solid Waste Accumulation Area El 12300	12.3-67	H	X
8	High Activity Waste Storage Area El 12300	12.3-67	H	X
9	Waste Sorting Area El 12300	12.3-67	H	X
10	Phase Separator Tank A El 5300	12.3-66	H	X
11	Phase Separator Tank B El 5300	12.3-66	H	X

Table 12.3-7 Area Radiation Monitors Turbine Building

No.	Location & Description	Figure #	Sensitivity Range	Local Alarms
1	~~Condensate Pump Maintenance Area~~ Operation Area (Laydown Space)	12.3-72~~70~~	M	X
2	Corridor (Condensate Sampling & Control Area)	12.3-69~~70~~	M	X
3	~~Offgas Sample & Control Area~~ Rack Room	12.3-68~~70~~	M	X
4	~~RFP 1A, 1B& 1C Area~~ MD-RFP Area	12.3-70	H	X
5	~~Filter Maintenace Area~~ CF Maintenance Area	12.3-~~70~~71	M	X
6	~~Demineralizer Area~~ CD Resin Strainer Room	12.3-~~71~~70	H	X
7	~~SJAE A & Recombiner Area~~ Steam Ejector Units Room	12.3-70~~71~~	H	X
8	~~SJAE B & Recombiner Area~~ OG Recombiner (A) Room	12.3-70~~71~~	H	X
9	~~HP Heaters & Drain Tank Area 1~~ OG Recombiner (B) Room	12.3-70~~71~~	H	X
10	~~HP Heaters & Drain Tank Area 2~~ High Pressure Drain Room	12.3-70~~71~~	H	X
11	~~MSR 1A & 1C Area~~ Moisture Separator and Reheater (A) Room	12.3-72	H	X
12	~~MSR 1B & 1D Area~~ Moisture Separator and Reheater (B) Room	12.3-72	H	X
13	Turbine Building Operating Floor	12.3-73	H	X
14	~~Equipment Main Access Area~~ Corridor (Unloading Bay)	12.3-70~~73~~	H	X

Table 12.3-8 Maximum Annual Dose (Person-Sieverts) to Construction Workers

	Unit 3 Construction Only[1]		Unit 3 & 4 Construction[2]		Unit 4 Construction Only[1]	
	Total Body	**Critical Organ**	**Total Body**	**Critical Organ**	**Total Body**	**Critical Organ**
Direct Radiation	0.076	–	0.142	–	0.175	–
Gaseous Effluents	0.054	0.190	0.101	0.356	0.156	0.339
Liquid Effluents	0.001	0.001	0.002	0.002	0.001	0.001
Total	0.131	0.191	0.245	0.358	0.332	0.340

[1] Dose for construction of one unit.

[2] Dose for construction of two units.

The following figures are located in Chapter 21:

- *Figure 12.3-1* *Reactor Building Radiation Zone Map for Full Power and Shutdown Operation at Elevation – 8200 mm*
- *Figure 12.3-3* *Reactor Building Radiation Zone Map for Full Power and Shutdown Operation at Elevation 4800/8500 mm*
- *Figure 12.3-5* *Reactor Building Radiation Zone Map for Full Power and Shutdown Operation at Elevation 12300 mm*
- *Figure 12.3-6* *Reactor Building Radiation Zone Map for Full Power and Shutdown Operation at Elevation 18100 mm*
- *Figure 12.3-10* *Reactor Building Radiation Zone Map for Full Power and Shutdown Operation at Cross Section View A–A*
- *Figure 12.3-16* *Reactor Building Radiation Zone Map Post-LOCA at Elevation 12300 mm (1F)*
- *Figure 12.3-21* *Reactor Building Radiation Zone Map Post-LOCA at Cross Section A–A*
- *Figure 12.3-37* *Radwaste Building, Radiation Zone Map, Normal Operation at Elevation – 1700 mm*
- *Figure 12.3-38* *Radwaste Building, Radiation Zone Map, Normal Operation at Elevation 5300 mm*
- *Figure 12.3-39* *Radwaste Building, Radiation Zone Map, Normal Operation at Elevation 12300 mm*
- *Figure 12.3-40* *Radwaste Building, Radiation Zone Map, Normal Operation at Elevation ~~18300~~*19100 *mm*
- *Figure 12.3-41* *Radwaste Building, Radiation Zone Map, Normal Operation at ~~Cross~~ Section A-A*
- *Figure 12.3-49* *Turbine Building, Radiation Zone Map, at Elevation 2300 mm~~5300 mm~~*
- *Figure 12.3-50* *Turbine Building, Radiation Zone Map, at Elevation 6300 mm~~12300 mm~~*
- *Figure 12.3-51* *Turbine Building, Radiation Zone Map, at Elevation 12300 mm~~20300 mm~~*
- *Figure 12.3-52* *Turbine Building, Radiation Zone Map, at Elevation 19700 mm~~30300 mm~~*

The following figures are located in Chapter 21 (continued):

- *Figure 12.3-53 Turbine Building, Radiation Zone Map, at Elevation 27800 mm~~Longitudinal Section A-A~~*
- *Figure 12.3-55 Turbine Building, Radiation Zone Map, Post LOCA, Longitudinal Section B-B*
- *Figure 12.3-56 Reactor Building, Area Radiation Monitors, – 8200 mm*
- *Figure 12.3-57 Reactor Building, Area Radiation Monitors, – 1700 mm and 1500 mm*
- *Figure 12.3-58 Reactor Building, Area Radiation Monitors, 4800 mm*
- *Figure 12.3-60 Reactor Building, Area Radiation Monitors, 23500 mm*
- *Figure 12.3-62 Reactor Building, Area Radiation Monitors, 31700 mm*
- *Figure 12.3-65 Not used*
- *Figure 12.3-66 Radwaste Building, Area Radiation Monitors, Elevation 5300 mm*
- *Figure 12.3-67 Radwaste Building, Area Radiation Monitors, Elevation 12300 mm*
- *Figure 12.3-68 Turbine Building B1F Floor Level, Area Radiation Monitors, Elevation 2300mm~~Not used~~*
- *Figure 12.3-69 Turbine Building, MB1F Floor Level, Area Radiation Monitors, Elevation 6300mm~~Grade Level 1, Area Radiation Monitors, Elevation 5300 mm~~*
- *Figure 12.3-70 Turbine Building, 1F Floor Level~~Grade Level 2~~, Area Radiation Monitors, Elevation 12300 mm*
- *Figure 12.3-71 Turbine Building, 2F Floor Level, Area Radiation Monitors, Elevation 19700 mm~~Grade Level 3, Area Radiation Monitors, Elevation 20300 mm~~*
- *Figure 12.3-72 Turbine Building, 3F Floor Level, Area Radiation Monitors, Elevation 27800 mm~~Grade Level 4, Area Radiation Monitors, Elevation 30300 mm~~*
- *Figure 12.3-73 Turbine Building, Area Radiation Monitors, Longitudinal Section ~~A-A~~B-B*
- Figure 12.3-75 Turbine Building, Radiation Zone Map, at Elevation 38300 mm

The following figures are located in Chapter 21 (continued):

- Figure 12.3-76 Turbine Building, Radiation Zone Map, at Elevation 47200 mm
- Figure 12.3-77 Turbine Building, Radiation Zone Map, Longitudinal Section B-B

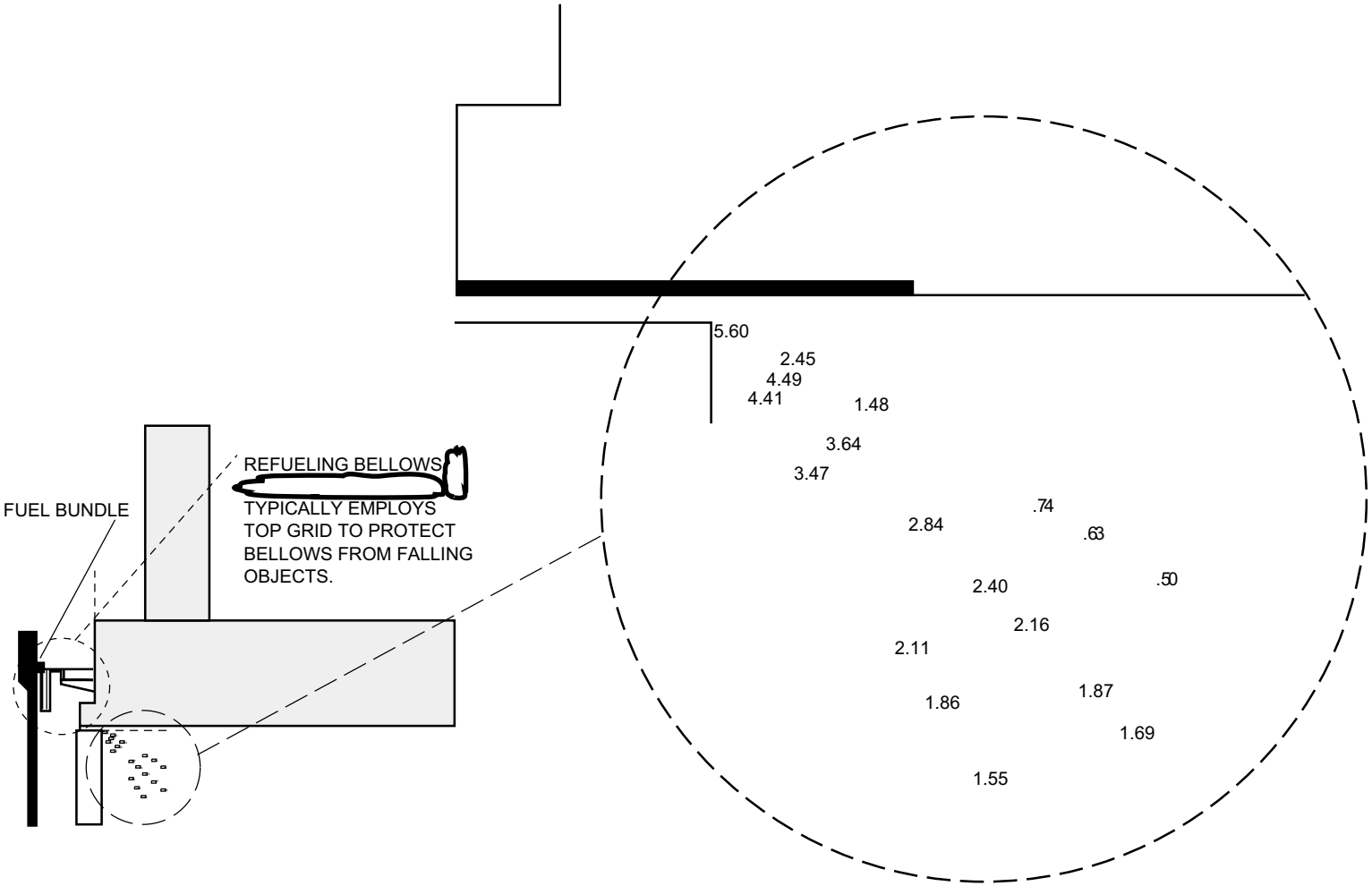

Figure 12.3-74 Upper Drywell Shielding Radiation Dose Rates with Fuel Bundle on Refueling Bellows (Gy/h)

12.4 Dose Assessment

The information in this section of the reference ABWR DCD, including all subsections and tables, is incorporated by reference with the following departures and supplements.

STD DEP Admin (Table 12.4-1)

STD DEP 9.1-1

STD DEP 11.2-1 (Table 12.4-1)

12.4.1 Drywell Dose

STD DEP Admin

The following provides the basis by which the drywell dose estimates for occupational exposure were made.

(1) Early studies on dose rates during MSIV maintenance showed increases in dose rate directly proportional to recirculation line activity. The ABWR has deleted the recirculation lines entirely, thereby removing the singly most significant source of radiation in the drywell. The second most significant dose for MSIV operations will be the deposited and suspended activity in the feedwater lines. The deposited activity in the feedwater lines is expected to be lower than typical BWRs owing to an enhanced condensate polishing *system ~~with full cleanup of all condensate water~~, a 2% CUW System, and titanium* or stainless steel *condenser tubes. Additionally, the ABWR is designed to limit the use of cobalt bearing materials on moving components which have historically been identified as major sources of in-water contamination. Overall, the feedwater line radiation is expected to be a factor of three lower than current BWRs. Because of these factors, it is expected that the effective dose rate in the drywell will be 18 ~~µGy/h~~*µSv/h *and 13 ~~µGy/h~~*µSv/h *in the steam tunnel outboard of the primary containment.*

12.4.2 Reactor Building Dose

STD DEP 9.1-1

STD DEP Admin

The following provides the basis by which the Reactor Building dose estimates for occupational exposure were made.

(2) ABWR refueling is accomplished via an automated refueling ~~bridge~~ machine*. All operations for refueling are accomplished ~~from an enclosed automation center off the refueling floor~~* as described in Section 9.1.4.2.7.1*. Time for refueling is reduced from a typical 4,400 person-hours down to 2,000 person-*hours *and from an effective dose rate of 25 ~~µGy/h~~*µSv/h *to less than 2 ~~µGy/h~~*µSv/h*.*

The following supplement addresses operator doses based on spent fuel movement operations. Refer to supplemental information provided in Tables 12.2-5a and 12.2-5b for Spent Fuel Storage, and Appendix 12B.

The dose rate from the highest activity irradiated fuel bundle elevated to the maximum up-position in the spent fuel pool (SFP) with water coverage of 8.5 ft (2.6 m) from the top of the fuel assembly active fuel was calculated. The dose rate at the refueling machine trolley platform 8.8 ft (2.7 m) above the refueling floor is approximately 1.2 mrem/hr (12 μSv/hr). This dose rate of 1.2 mrem/hr (12 μSv/hr) is conservative because of the additional 1 ft (0.3 m) of air space between the water surface and refueling floor, and the attenuation through the refueling machine lower structure and platform. Additionally, it is below the criteria of 2.5 mrem/hr from an irradiated fuel unit, control component, or both, as required by ANSI/ANS-57.1-1992. Note that this value does not include dose from radionuclides contained in Spent Fuel Pool water, which is expected to be no greater than 0.7 mrem/hr at approximately 1.2 meters above the refueling floor, based on data from currently operating plants utilizing the ABWR spent fuel pool design. This value takes no credit for attenuation through refueling machine construction material or the additional distance to the refueling machine trolley platform, which adds additional conservatism.

12.4.3 Radwaste Building Dose

STD DEP 11.2-1

This subsection is replaced in its entirety with the following.

Radwaste Building work consists of water processing, pump and valve maintenance, shipment handling, radwaste management, and general cleanup activity. Radwaste building doses result from routine surveillance, testing, and maintenance of the solid and liquid waste treatment equipment. The liquid treatment system collects liquid wastes from equipment drains, floor drains, filter backwashes, and other sources within the facility. The solid treatment system processes resins, backwash slurries, and sludge from the phase separator. It also processes dry active waste from the plant. Some examples of radwaste activities include resin dewatering, movement of casks and liners, filter handling, resin movement, and installation and removal of mobile radwaste processing skids. Both waste treatment systems are based on current mobile radwaste processing technology and avoid complex permanently installed components. All radwaste tankage and support systems are permanently installed. More of the radwaste operations involve remote handling than in a typical BWR. This more flexible radwaste system and building design, simpler operation, and improved maintenance procedures result in a reduction in the number of total hours in the Radwaste Building radiation areas. The results of an industry assessment indicate that there was a substantial reduction in radiation dose (one plant experienced a factor of eight reduction in radiation dose) relative to the doses specified in the reference DCD. Based on this experience, it is estimated that the departures involving the Liquid Waste Management System (LMWS) will result in a reduction of the Radwaste Building annual radiation dose by a factor of approximately four (Reference 12.4-5). The

average radiation dose rate to workers is assumed to be the same as specified in the reference DCD and the number of hours in the Radwaste Building radiation areas is changed from 4200 hours per year to 1000 hours per year. This results in a radiation dose associated with the Radwaste Building of 25 person-mSv/year (approximately a factor of four reduction), a total of 54,040 hours per year in radiation areas, and a total radiation exposure of 909 person-mSv/year. This is presented in Table 12.4-1.

12.4.5 Work at Power

STD DEP Admin

*Work at power typically requires 5,000 hours per year at an effective dose rate of 66 ~~µGy/h~~*µSv/h *for the BWR. This category covers literally all aspects of plant maintenance performed during normal operations from health physics coverage to surveillance, to minor equipment adjustment, and minor equipment repair. Overall, the ABWR has been designed to use more automatic and remote equipment. It is expected that items of routine monitoring will be performed by camera or additional instrumentation. Most equipment in the ABWR is palatalized, which permits quick and easy replacement and removal for decontamination and repair. Therefore, a reduction in actual hours needed at power is estimated at 1,000 hours less than the typical value. In the area of effective dose rate, the ABWR is expected to have significantly lower general radiation levels over current plants, owing to more stringent water chemistry controls, a full flow condensate flow system, a 2% cleanup water program, titanium* or stainless steel *condenser tubes, Fe feedwater control, and low cobalt usage. In addition, the ABWR has in the basic design, compartmentalized all major pieces of equipment so that any piece of equipment can be maintained or removed for maintenance without affecting normal plant operations. This design concept thereby reduces radiation exposure to personnel maintaining or testing one piece of equipment from both shine and airborne contamination from other equipment. Finally, the ABWR has incorporated in the basic design the use of hydrogen water chemistry (HWC) and the additional shielding necessary to protect from the factor of six increase in N-16 shine produced through the steamlines into the Turbine Building. For normally occupied areas, sufficient shielding is provided to protect from N-16 shine. In areas which may be occupied temporarily for specific maintenance or surveillance tasks and where additional shielding is not appropriate (for the surveillance function) or deemed reasonable, the HWC injection can be stopped causing the N-16 shine to decrease to within normal operating BWR limits within 90 seconds and thus permitting those actions needed. Overall, it is estimated that the effective dose rate for work at power will be slightly over two thirds the typical rate or 40 ~~µGy/h~~*µSv/h*.*

12.4.6 References

12.4-5 “Performance Evaluation of Advanced LLW Liquid Processing Technology, Boiling Water Reactor Liquid Processing” EPRI Technical Report 1003063, November, 2001.

Table 12.4-1 Projected Annual Radiation Exposure

Operation Task	Tier 2 Section	hours per year	~~µGy/h~~ µSv/h	person-mSv/yr
Drywell				
MSIV	12.4.1(1)	~4,200	15	63
SRV, RIP, etc	12.4.1(2)	1,150	75	86
FMCRD	12.4.1(3)	370	65	24
LPRM/TIP	12.4.1(4)	200	500	100
ISI	12.4.1(5)	1,200	55	66
Other	12.4.1(6)	3,500	35	123
Total		10,620		462
Reactor Building				
Vessel	12.4.2(1)	1,200	15	18
Refueling	12.4.2(2)	2,000	2	4
RHR/CUW	12.4.2(3)	400	54	22
FMCRD	12.4.2(4)	120	45	5
Instrument	12.4.2(5)	1,000	30	30
Other	12.4.2(6)	4,400	15	66
Total		9,120		145
Radwaste Building	12.4.3	~~4200~~ **1,000**	25	~~105~~ **25**
Turbine Building				
Valve Maintenance	12.4.4(1)	1,000	39	39
Turbine Overhaul	12.4.4(2)	15,500	2	31
Condensate	12.4.4(3)	1,000	35	35
Other	12.4.4(4)	11,800	1	12
Total		29,300		117
Work at Power	12.4.5	4,000	40	160
Totals		~~57,240~~ **54,040**		~~989~~ **909**

12.5 Health Physics Program

The information in this section of the reference ABWR DCD, including all subsections, is incorporated by reference with the following supplements.

12.5.3.1 Radiation Protection Program

The following standard supplement addresses COL License Information Item 12.9.

The Operational Radiation Protection Program is described in Section 12.5S.

12.5.3.2 Compliance with Paragraph 50.34 (f) (xxvii) of 10 CFR 50 and NUREG-0737 Item III.D.3.3

The following site-specific supplement addresses COL License Information Item 12.10.

STPNOC currently has approximately 14 portable high volume air samplers, 14 portable low volume air samplers, and 6 portable continuous air samplers. Procedures have been developed to measure the iodine activity entrained on the silver zeolite cartridges or carbon filter units. Personnel have been trained, and will continue to be trained, to operate this equipment. The background activity in the counting rooms is normally maintained low enough to permit counting. Additionally, shielding materials are available to facilitate the counting operation, if necessary. The filter units are counted by a high resolution detector and a multi-channel analyzer or similar device, thereby eliminating the need for purging noble gases.

It is expected that the STPNOC Health Physics program, procedures, and training curriculum will be expanded and modified as necessary to meet requirements for all operating units, with air sampling equipment shared among the four units and additional samplers procured as required to support four unit operation.

12.5S Operational Radiation Protection Program

Nuclear Energy Institute Report No. NEI 07-03A, “Generic FSAR Template Guidance for Radiation Protection Program Description” provides the Operational Radiation Protection Program for STP 3 & 4. This NEI template is incorporated by reference with the following site-specific supplements. The NEI 07-03A template material is shown in italics.

NEI report no. NEI 07-08A, "Generic FSAR Template Guidance for Ensuring that Occupational Radiation Exposures are as Low as is Reasonably Achievable (ALARA)", provides additional operating policy and consideration guidance for developing and implementing an ALARA program. This template is incorporated by reference.

12.5S.1 Management Policy

(8) Establish an ALARA Committee with delegated authority from the Plant Manager that includes, at a minimum, the managers of Operations, Maintenance, Work Control, Engineering and Radiation Protection to help assure effective implementation of line organization responsibilities for maintaining worker doses ALARA.

12.5S.2.1 Plant Manager

(9) Establish an ALARA Committee with delegated authority from the Plant Manager that includes, at a minimum, the managers of Operations, Maintenance, Work Control, Engineering and Radiation Protection to help assure effective implementation of line organization responsibilities for maintaining worker doses ALARA.

12.5S.2.3 Radiation Protection Manager

(7) Participate as a member of the plant ALARA committee.

12.5S.2.4 Methods to Maintain Exposures ALARA

Refueling

After the reactor coolant system is depressurized, it is degassed and sampled to verify that the gaseous activity is low, prior to removing the reactor head. After flooding the refueling pool above the reactor, purification of the refueling pool water continues in order to maintain exposures from activity in the water ALARA. Movement of irradiated fuel assemblies is accomplished with the assembly maintained underwater. By following these procedures, the normal radiation level on the refueling bridge is expected to be less than 5 mrem/hr. The Radiation Work Permit (RWP) system is used to maintain positive radiological control over work in progress.

12.5S.4.4 Access Control

There are three Very High Radiation Areas in the plant: the Reactor Water Cleanup System (CUW) backwash tank room; the filter demineralizer room (both CUW and Fuel

Pool Cooling and Cleanup); and the Spent Fuel Pool lower elevation. These areas are identified on the plant layout drawings in Section 12.3. Filter Demineralizer equipment is in shielded rooms accessible only through openings blocked by shield plugs. Removal of shield plugs requires the use of cranes. Use of the cranes is controlled by lock and key, with keys under the control of Health Physics. Postings indicate dose rates behind the shielding. Entry into these rooms is only authorized via specific Radiation Work Permit.

Entry into the CUW backwash receiving tank room is through a locked door, with keys controlled by Health Physics. Entry is not anticipated, as no scheduled maintenance or surveillance is required. (See ABWR DCD, Tier 1, Table 3.2b, Ventilation and Airborne Monitoring ITAAC: Design Commitment 1, Acceptance Criterion c.) Entry into the CUW and Fuel Pool Cooling and Cleanup filter demineralizer room is anticipated once every three to five fuel cycles for replacement of filter septa. The Spent Fuel Pool lower elevation is inaccessible to personnel working above the surface due to the height of water covering spent fuel. Diving activities are controlled by Health Physics (HP) personnel using specific Radiation Work Permits (RWPs), constant HP monitoring, alarming dosimetry, and work processes governed by procedure.

12.5S.4.7 Dose Control

(2) *Radiation Protection will assure that procedures and methods for operation, maintenance, repair, surveillance, refueling, and other activities that may involve significant exposures are reviewed prior to initial use and periodically thereafter to assure measures are considered to minimize occupational and public radiation exposures.* Significant exposures are those that may result from activities that require entry into areas greater than 10 R/hr, or where an individual is likely to receive greater than 500 mrem during a single entry.

12A Appendix 12A Calculation of Airborne Radionuclides

12A.1 Calculation of Airborne Radionuclides

The information in this appendix of the reference ABWR DCD, including all subsections, is incorporated by reference with no departures or supplements.

12B Spent Fuel Pool Geometry and Dose Rate Calculation

This Appendix provides~~ site-specific~~ information regarding the~~ Spent Fuel Pool (SFP) geometry and~~ methodology used to generate Spent Fuel Pool (SFP) radiation sources and dose rate assessments. ~~This Appendix supplements the SFP radiation source information in Section 12.2, specifically Tables 12.2-5a and 12.2-5b.~~See FSAR Section 12.2, Tables 12.2-5a, 12.2-5b, and 12.2-5c; and FSAR Section 12.3, Figures 12.3-5 through 12.3-10.

~~The SFP geometry is provided in FSAR Section 12.2, Tables 12.2-5a and 12.2-5b; and FSAR Section 12.3, Figures 12.3-6 and 12.3-10. The SFP storage rack has the capacity for 2365 BWR fuel assemblies. The size and configuration of the storage rack are given in Figure 12B-1, which shows an irregular rectangular cross-section area extended to 10.7 m x 9.0 m. The fuel storage rack is situated at the lowest level of the SFP, where the total height of water is 11.6 m.~~

12B.1 Core Source Determination

The STP 3 & 4 core rated power is 3926 MWt. The core load consists of 872 fuel assemblies, with an assumed average enrichment of 4.2%. The reload batch size is 320 fuel assemblies. The equilibrium core is assumed to operate on a two-year fuel cycle, with approximately 704 effective-full-power-days (EFPD) of operation for each cycle. The core is composed of three batches of fuel, with varying residence time and burnup at the end of cycle (EOC). The latest batch of fresh fuel assemblies will be placed at high power density locations during operation and will average 23 GWD/T at EOC, 1.27 times the core average (18 GWD/t). The second oldest batch will have resided in the core for one cycle prior to the current cycle and will have a cycle exposure of 20 GWD/t (1.14 times average) and an average accumulated exposure of 43 GWD/T at EOC. The oldest batch will have a cycle exposure of 8 GWD/t (0.43 times average) and an average accumulated exposure of~~ resided in the core for two cycles prior to the current cycle and on average accumulated~~ 51 GWD/T at EOC. Radiation sources of the equilibrium core, as well as the discharge batch, are calculated using the code ORIGEN-S of the SCALE system (Reference 12B.6-1).

In addition to fuel elements, the mass of supporting structural materials is also included in the ORIGEN-S calculations. Therefore the calculated radiation source includes contributions from activation and corrosion products as well as fission products and actinides. In addition, a safety margin of 10% is added to the calculated radiation source to bound the uncertainties in structural material specification. The resulting equilibrium core gamma source is shown in Table 12B-1.

12B.2 SFP Fuel Source Determination

The SFP radiation source is calculated using ~~the maximum capacity of the storage rack~~five batches of spent fuel discharged at two-year intervals plus a full core discharge.~~ Under normal operating conditions, the maximum number of fuel assemblies accommodated by the storage rack is 1493, leaving enough room for a full core offload in the event of unexpected operating conditions.~~ The~~ maximum~~ SFP radiation source~~ when the storage rack is filled to its capacity will~~ includes the full equilibrium core radiation source conservatively assumed to be at one-day post

shutdown plus the sources of existing fuel assemblies in the SFP. The existing fuel assemblies in the SFP are assumed to be the discharged batches from an equilibrium core at decay times of two-years, four-years, six-years, eight-years, and ten-years. Calculation of these sources has been described in 12B.1 above. Similar to the core radiation source, an extra 10% safety margin is added to the calculated results for conservatism. The resulting SFP peak gamma source and peak neutron source are given in Tables 12B 2 and 12B-3, respectively. The major radionuclides that provide the peak SFP source are listed in Table 12B-4.

12B.3 SFP Dose Rate Assessment

The SFP radiation source is used for the shielding design and analysis to ensure radiation levels at neighboring areas surrounding the SFP meet the design criteria. A simplified model of a rectangular parallelepiped of (8.1 m x 8.1 m x 11.2 m) is assumed to represent the SFP. The SFP peak radiation source is assumed to be homogenized over the bottom 3.8 m of the SFP to represent the active fuel length of a typical BWR fuel assembly. 3.8 meters was assumed to represent the height of the active fuel region, since this height results in the minimum required shielding of water, 11.2 m – 3.8 m = 7.4 m (see Table 12.2-5c). The~~re are 2 m thick~~ concrete walls and floor surrounding the SFP ~~on all sides. The floor of the SFP is~~are 2 meters thick ~~as well~~(see Table 12.2-5c). The water shielding and distance between the spent fuel racks and the surrounding walls in the pool are not considered. (See Figure 12B-1). The dose rate calculations are carried out with the point-kernel shielding code QAD-CGGP-A (Reference 12B.6-2). The calculated dose rate results indicate all the areas surrounding the SFP meet the reactor building (R/B) radiation zone limits. Figure 12B-2 shows the dose rate profile for a set of detectors along the centerline of the SFP perpendicular to the water surface. The ~~D~~dose rate at the water surface is approximately 0.001 μrem/hr (1E-5 μSv/hr). The dose rates assessed are due to fuel assemblies in the SFP alone. Contributions from contaminants in the SFP water are not included.

12B.4 Single Bundle Refueling Operator Dose Rate Assessment

The maximum calculated radiation dose rate to the refueling operator from a single raised fuel assembly is calculated as follows:

As discussed in 12B.1 above, the core is rated at 3926 MWt. It consists of 872 fuel bundles, 320 of which are installed as new assemblies each refueling. 3926MWt / 872 bundles equals a core average of 4.502MWt per bundle. This average, however, consists of once, twice, and thrice burned bundles.

Similar to the SFP dose rate assessment, QAD-CGGP-A is used for the single bundle dose rate calculations. Three separate calculations are performed to address the contributions from (1) the high enrichment lower active fuel region, (2) the low enrichment (natural uranium) upper active fuel region (top node) where the power density is lower than the core average, and (3) the upper non-active fuel assembly plenum (referred to as the handle)~~the active fuel region, the top fuel node where the power density is lower than the core average, and the assembly handle~~ where it is assumed that majority of the activation products accumulate. The radiation source

input for each of these components and the fuel assembly dimensions in the calculation model are presented in Table 12B-5 (the values in this table do not include an added safety margin).

DCD 9.1.4.1 requires that a fully retracted fuel grapple must maintain 2591 mm (8.5 ft) of water shielding over fuel. Therefore, the model assumes that the top node is just below the 8.5 feet of shielding water, and the handle element is just above that level. The movement of a raised fuel assembly from a once burned batch results in the highest dose rate to a worker on the refueling platform during movement of the assembly from the reactor core to the spent fuel pool.

The core design indicates that the average burnup of the once-burned batch is approximately 23 GWd/MTU, or 5.703 MWt/bundle. This value is 1.27 times the average per bundle across the entire core, as stated above. This factor would have to be increased by 10% to reflect a peak bundle of 1.4 times the core average (see DCD Table 1.3-1). However, the DCD radial peaking factor of 1.4 is for an 18-month cycle. To account for the 24-month cycle assumed in this assessment, a radial peaking factor for a 24-month core design of 1.65 is typical. Consequently, a factor of 30% was applied to the 1.27 times core average value to reflect the 1.65 peaking factor. ~~To obtain the highest activity bundle for determining the refueling source term, an additional 30% was added to the calculated dose rate from the once-burned batch of 1.27 times the core average. The net effect is equivalent to using a bundle source of 1.65 times the core average for this highest activity fuel assembly.~~ The dose rate is bounding for any assembly that will be moved by the refueling operator. (The calculated gamma source of a single bundle with one-cycle residency is compared with that of three-cycle residency in Table 12B-6, which further confirms that peak source has been chosen for the refueling dose rate assessment. The values in this table do not include an added safety margin.)

It is assumed that the fuel assembly is lifted to a height of 8.5 ft (2.6 m) below the pool water surface with the operator on the refueling machine trolley platform at a minimum of 8.8 ft (2.7 m) above the water surface. The resulting peak dose rate at 8.8 ft (2.7 m) above the water surface is approximately 1.2 mrem/hr, located at a radial distance from the fuel assembly of approximately 140 cm (4.6 ft) as shown in Figure 12B-3. Even when the maximum fuel pool water source (see Section 12B.5 below) is added, the dose rate remains below 2.5 mrem/hr. For an operator standing on the trolley platform, the dose rate will be less than that shown in Figure 12B-3; therefore the design criteria of ANSI/ANS-57.1-1992 has been satisfied.

12B.5 Spent Fuel Pool Radionuclides and Dose

The Fuel Pool Cooling and Cleanup (FPC) system described in FSAR Subsections 9.1.3 and 12.3.1.4.3 maintains the SFP water at a low radioactive nuclide level. In support of this statement, representative data from an operating ABWR plant is presented. Measurements at 1.2 m above the refueling floor indicate a maximum of 0.007 mSv/hr (0.7 mrem/hr) during plant outages with 1) fuel assemblies fully seated in the storage racks, and 2) maximum levels of measured radionuclides in the SFP water. This maximum dose rate is measured at 1.2 m (3.9 ft) above the refueling floor. During routine operations, the dose rate is expected to be less for normal operation of

the FPC system. Also, the dose rate is considerably less at the operating trolley platform due to the increased distance from 1.2 m (3.9 ft) to 2.7 m (8.8 ft) and attenuation through the refueling machine lower structure and platform. A listing of SFP water radionuclides for a representative ABWR is summarized in Table 12B-7.

12B.6 References

12B.6-1 NUREG/CR-0200, "ORIGEN-S: SCALE System Module to Calculate Fuel Depletion, Actinide Transmutation, Fission Product Buildup and Decay, and Associated Radiation Source Terms," Rev 7, May 2004.

12B.6-2 CCC-645, "QAD-CGGP-A: Point Kernel Code System for Neutron and Gamma-Ray Shielding Calculations Using the GP Buildup Factor," Oak Ridge National Laboratory, December 1995.

12B.6-3 CN-REA-10-53, "STP Units 3 & 4 ABWR Spent Fuel Pool Radiation Source", Revision 1, Westinghouse Electric Company LLC, December 15, 2010.

12B.6-4 CN-REA-10-64, "STP Units 3 & 4 ABWR Spent Fuel Dose rates", Revision 0, Westinghouse Electric Company LLC, October 15, 2010.

12B.6-5 CN-REA-10-67, "Dose rate Evaluation from a Single ABWR Fuel Bundle in STP Units 3 & 4 Spent Fuel Pool", Revision 0, Westinghouse Electric Company LLC, October 10, 2010.

12B.6-6 LTR-ABWR-LIC-11-001, "Scaling of Dose rate for a Single Fuel Bundle Dose to Worker on Refueling Platform - STP 3&4", March 31, 2011.

Table 12B-1 Gamma Source* of an Equilibrium Core vs. Time Post-Shutdown

Energy Range (MeV)	Gamma Source (MeV/s-MW)	
	1-Day	30-Day
0.02 - 0.035	1.4E+14	2.7E+13
0.035 - 0.05	1.3E+14	3.2E+13
0.05 - 0.075	1.1E+14	2.6E+13
0.075 - 0.125	1.6E+15	5.5E+13
0.125 - 0.175	4.5E+14	1.2E+14
0.175 - 0.25	1.0E+15	3.6E+13
0.25 - 0.40	1.9E+15	1.4E+14
0.40 - 0.90	1.1E+16	3.9E+15
0.90 - 1.35	1.5E+15	2.1E+14
1.35 - 1.80	3.4E+15	6.9E+14
1.80 - 2.20	2.5E+14	5.3E+13
2.20 - 2.60	2.5E+14	5.1E+13
2.60 - 3.00	4.9E+12	1.1E+12
3.00 - 3.50	1.9E+12	4.5E+11
3.50 - 4.00	1.3E+10	3.3E+07
4.00 - 4.50	2.1E+09	2.5E+06
4.50 - 5.00	1.8E+10	1.6E+06
5.00 - 10.00	1.3E+08	2.8E+06
Total	2.2E+16	5.4E+15

* Based on rated power 3926 MWt and approximately 704 effective-full-power-days (EFPD) of operation each cycle. 10% safety margin added to ORIGEN-S results.

Table 12B-2 SFP Peak Gamma Source (MeV/s) vs. Time Post-Shutdown

Energy Group	Energy Range (MeV)	1-Day	1-Year	2-Year
1	0.02 - 0.035	5.5E+17	3.9E+16	2.5E+16
2	0.035 - 0.05	5.5E+17	4.1E+16	2.3E+16
3	0.05 - 0.075	4.5E+17	4.1E+16	2.4E+16
4	0.075 - 0.125	6.2E+18	8.5E+16	5.1E+16
5	0.125 - 0.175	1.8E+18	8.3E+16	4.1E+16
6	0.175 - 0.25	3.9E+18	5.6E+16	3.2E+16
7	0.25 - 0.40	7.4E+18	1.2E+17	6.8E+16
8	0.40 - 0.90	4.5E+19	3.6E+18	2.5E+18
9	0.90 - 1.35	6.0E+18	2.1E+17	1.5E+17
10	1.35 - 1.80	1.3E+19	8.3E+16	5.1E+16
11	1.80 - 2.20	9.9E+17	4.7E+16	2.0E+16
12	2.20 - 2.60	9.7E+17	4.1E+15	2.0E+15
13	2.60 - 3.00	1.9E+16	7.3E+14	3.6E+14
14	3.00 - 3.50	7.6E+15	1.0E+14	5.1E+13
15	3.50 - 4.00	5.2E+13	1.1E+11	7.0E+10
16	4.00 - 4.50	8.4E+12	2.4E+10	2.3E+10
17	4.50 - 5.00	6.9E+13	1.6E+10	1.5E+10
18	5.00 - 10.00	5.4E+11	2.7E+10	2.5E+10
Total		8.8E+19	4.4E+18	3.0E+18

Note: The data represents one full core offload plus existing pool batches. 10% safety margin is added.

Table 12B-3 SFP Peak Neutron Source

Energy Group	Neutron Energy (KeV)	(n/s) 1-Day Post-Shutdown
1	1.0E-08 - 1.0E-05	1.0E-02
2	1.0E-05 - 3.0E-05	8.0E-03
3	3.0E-05 - 5.0E-05	1.4E-00
4	5.0E-05 - 1.0E-04	1.2E-00
5	1.0E-04 - 2.25E-04	9.5E+00
6	2.25E-04 - 3.25E-04	8.7E+00
7	3.25E-04 - 4.0E-04	7.9E+00
8	4.0E-04 - 8.0E-04	5.1E+01
9	8.0E-04 - 1.0E-03	2.7E+01
10	1.0E-03 - 1.13E-03	2.6E+01
11	1.13E-03 - 1.3E-03	3.1E+01
12	1.3E-03 - 1.77E-03	9.7E+01
13	1.77E-03 - 3.05E-03	3.3E+02
14	3.05E-03 - 0.01	2.9E+03
15	0.01 - 0.03	1.5E+04
16	0.03 - 0.1	9.3E+04
17	0.1 - 0.55	1.3E+06
18	0.55 - 3.0	1.7E+07
19	3.0 - 17.0	2.3E+08
20	17.0 - 100.0	3.2E+09
21	100 - 400	2.1E+10
22	400 - 900	4.7E+10
23	900 - 1400	4.7E+10
24	1400 - 1850	3.8E+10
25	1850 - 3000	7.2E+10
26	3000 - 6430	6.5E+10
27	6430 - 2.0E+04	5.9E+09

Note: The data represents one full core offload plus existing pool batches. 10% safety margin is added.

Table 12B-4 Peak Source Radioisotopes in the Spent Fuel Assemblies

Isotopes	Curies	Isotopes	Curies
I-131	1.07E+08	Sr-92	3.25E+05
I-132	1.36E+08	Y-91	1.46E+08
I-133	1.09E+08	Y-91M	1.56E+07
I-134	6.20E+00	Y-92	4.81E+06
I-135	1.79E+07	Y-93	3.35E+07
Total I	**3.71E+08**	Zr-93	3.78E+02
		Zr-95	2.02E+08
Na-24	3.19E+03	Nb-95M	2.24E+06
P-32	3.16E+04	Nb-95	1.99E+08
Cr-51	1.76E+07	Mo-99	1.67E+08
Mn-54	7.62E+05	Tc-99M	1.60E+08
Mn-56	6.13E+04	Tc-99	2.61E+03
Fe-55	6.38E+06	Ru-103	1.75E+08
Fe-59	3.88E+05	Rh-103M	1.75E+08
Co-58	9.22E+05	Ru-106	6.63E+07
Co-60	1.54E+05	Rh-106	6.63E+07
Ni-63	1.71E+05	Ag-110M	3.50E+05
Cu-64	1.59E+04	Ag-110	4.77E+03
Zn-65	3.70E+01	Te-129M	5.68E+06
Sr-89	1.11E+08	Te-129	5.21E+06
Sr-90	1.51E+07	Te-131M	1.44E+07
Y-90	1.55E+07	Te-131	2.89E+06
Sr-91	2.46E+07	Te-132	1.32E+08
Total	**1.93E+08**	Ba-137M	1.89E+07
		Ba-140	1.93E+08
Kr-83m	6.41E+04	La-140	2.06E+08
Kr-85m	7.52E+05	Ce-141	1.90E+08
Kr-85	1.89E+06	Ce-144	1.61E+08
Kr-87	1.27E+02	Pr-144M	2.25E+06
Kr-88	2.30E+05	Pr-144	1.61E+08
Total Kr	**2.94E+06**	W-187	1.91E+05
		Np-239	1.65E+09
Xe-131m	1.25E+06	Pu-239	5.03E+04
Xe-133m	6.63E+06	**Total**	**4.16E+09**
Xe-133	2.28E+08		
Xe-135m	2.92E+06	Cs-134	2.65E+07
Xe-135	5.84E+07	Cs-135	8.82E+01
Total Xe	**2.98E+08**	Cs-136	5.21E+06
Noble Gas Totals	**3.00E+08**	Cs-137	2.01E+07
		Total Cs	**5.18E+07**

Note: The data represent one full core offload plus existing pool batches. 10% safety margin is added.

Table 12B-5 Single Bundle Source for Dose Assessment (Photons/s)

Energy Group	Energy Range (MeV)	Enriched Fuel Region	Top Node	Handle
1	0.02 - 0.035	2.5E+16	1.9E+14	6.0E+13
2	0.035 - 0.05	1.5E+16	1.1E+14	7.4E+12
3	0.05 - 0.075	8.4E+15	7.0E+13	8.7E+12
4	0.075 - 0.125	7.0E+16	1.1E+15	7.4E+12
5	0.125 - 0.175	1.6E+16	1.1E+14	2.2E+13
6	0.175 - 0.25	2.2E+16	2.7E+14	3.4E+12
7	0.25 - 0.40	2.8E+16	3.2E+14	3.5E+13
8	0.40 - 0.90	8.7E+16	6.4E+14	4.8E+14
9	0.90 - 1.35	6.0E+15	4.2E+13	1.6E+13
10	1.35 - 1.80	1.1E+16	8.0E+13	1.6E+12
11	1.80 - 2.20	4.9E+14	3.4E+12	4.2E+11
12	2.20 - 2.60	5.4E+14	3.7E+12	1.2E+10
13	2.60 - 3.00	8.9E+12	6.6E+10	5.5E+10
14	3.00 - 3.50	3.2E+12	2.2E+10	1.6E+09
15	3.50 - 4.00	2.1E+10	1.3E+08	2.5E+07
16	4.00 - 4.50	3.1E+09	1.7E+07	1.7E+04
17	4.50 - 5.00	2.3E+10	1.3E+08	1.3E+05
18	5.00 - 10.00	1.1E+08	6.0E+05	6.0E+02
Total		2.9E+17	2.9E+15	6.4E+14
Source Height (cm)*		366	15	15

* Bundle cross-section is 15.24 cm x 15.24 cm (6 in x 6 in).

Table 12B-6 Single Bundle Gamma Source (MeV/s) Comparison

Decay	Once Burned	Thrice Burned
1 Day	1.1E+17	5.8E+16
30 Days	2.6E+16	1.5E+16
1 Year	2.1E+15	3.6E+15
2 Years	1.0E+15	2.4E+15
3 Years	7.0E+14	1.8E+15

Table 12B-7 SFP Water Radionuclides

Nuclide	Bq/cm^3	Nuclide	Bq/cm^3
Cr-51	9.4E-02	Nb-95	8.1E-03
Mn-54	9.7E-02	Cs-134	1.4E-02
Mn-56	3.6E-02	Cs-137	7.7E-03
Co-58	5.1E-01	Sb-124	5.1E-01
Co-60	1.3E+00	Sb-125	3.4E-02
Cu-64	1.0E-01		

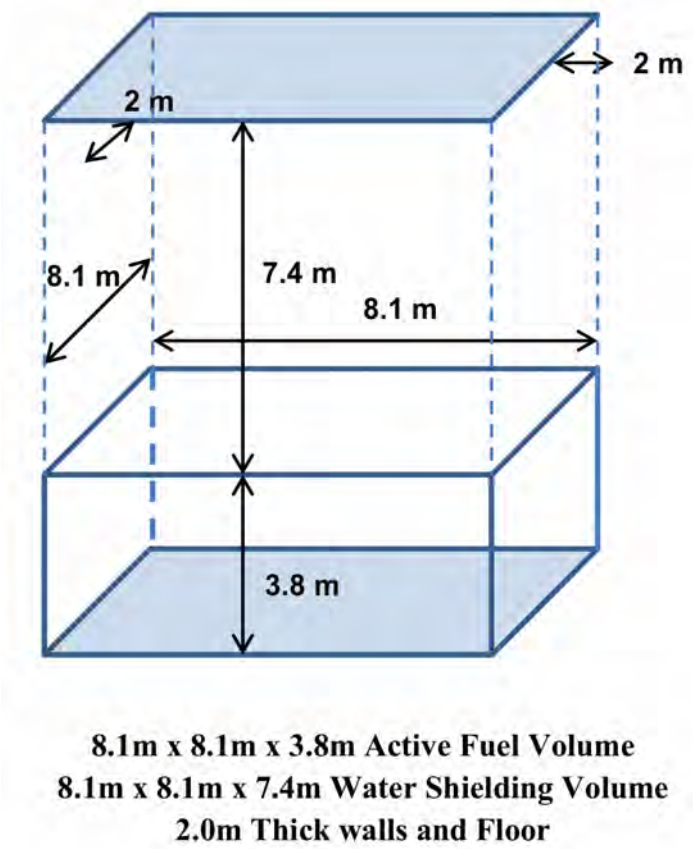

Figure 12B-1 ~~SFP Layout and Dimensions~~Spent Fuel Pool Analytical Model

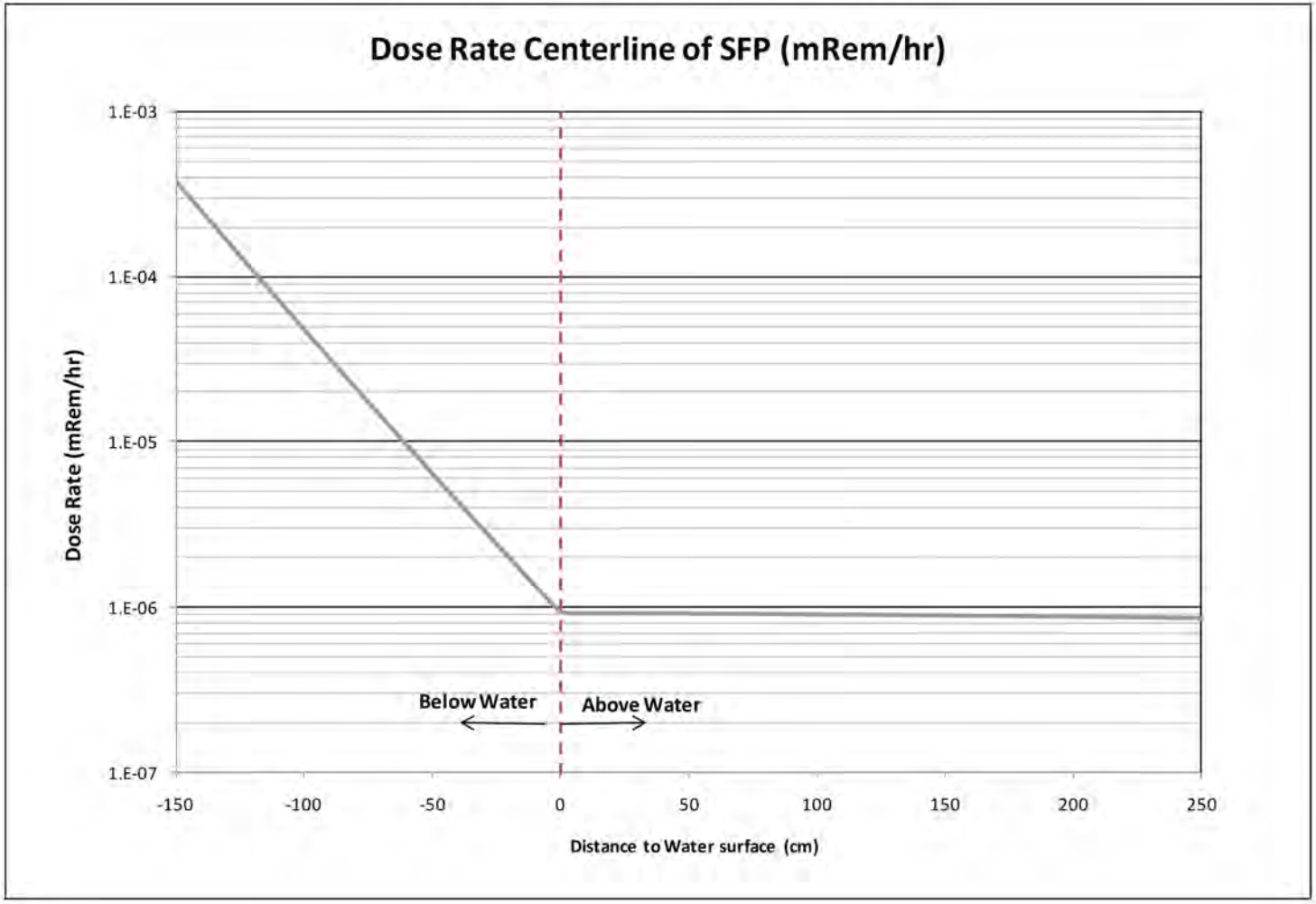

Figure 12B-2 SFP Centerline Dose Rate

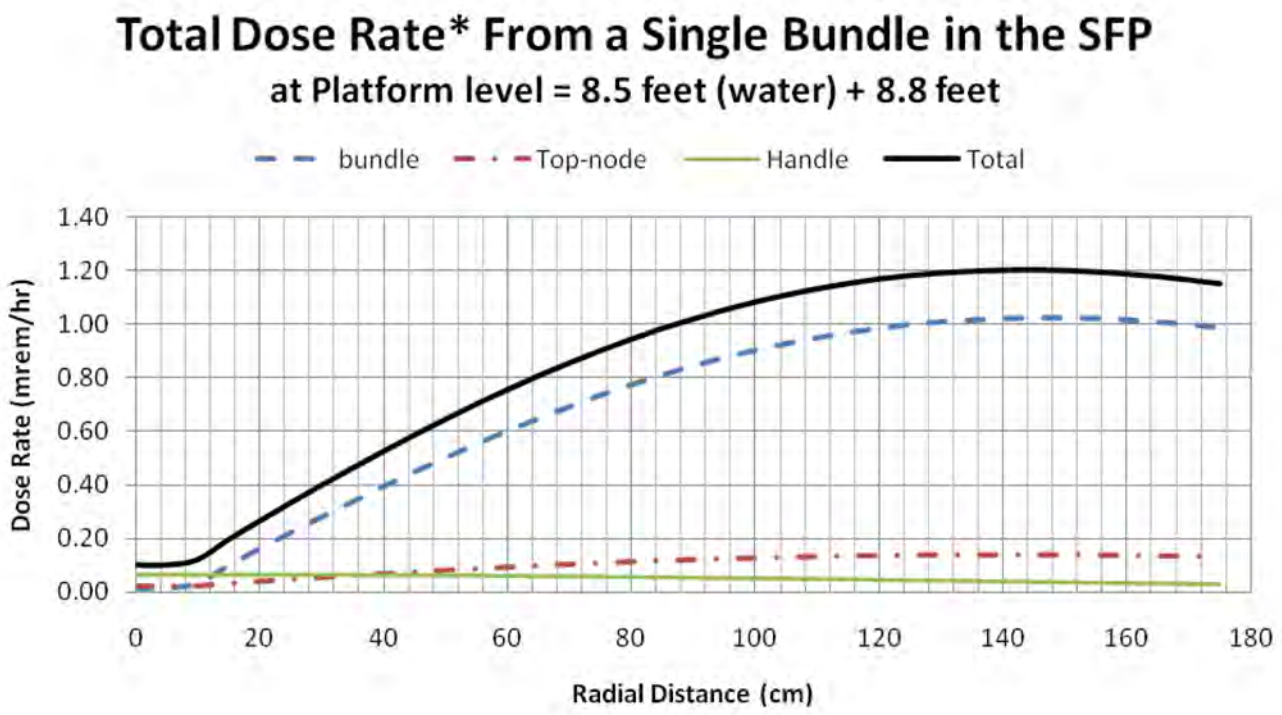

Figure 12B-3 Maximum Single Bundle Dose Rate at Refueling Platform

13.0 Conduct of Operations

This chapter provides information relating to the preparations and plans for design, construction, and operation of South Texas Project Units 3 & 4 (STP 3 & 4). It provides assurance that STP Nuclear Operating Company (STPNOC) will establish and maintain a staff of adequate size and technical competence, and that operating plans are adequate to protect public health and safety.

13.1 Organizational Structure of Applicant

NINA will manage the licensing, construction, and testing of STP 3 & 4. STPNOC will have responsibility and control over the operation and maintenance of the facility just as with STP 1 & 2. STPNOC will increase its STP 3 & 4 staff as the project progresses. The plans call for developing a similar management and technical support organization for STP 3 & 4 with the operating responsibilities; organizational arrangements; qualifications; and authorities that have resulted in the successful operation of STP 1 & 2.

NINA is a company whose focus is to market and promote ABWR nuclear technology, and to develop and construct ABWR nuclear power generation facilities in the U.S. NINA has assumed responsibility for the design and construction of STP 3 & 4, and it has organized itself for this purpose by transitioning the previously existing STPNOC organization responsible for the development of STP 3 & 4 from STPNOC to NINA. This transition includes the programs, processes and procedures developed by STPNOC for STP 3 & 4.

13.1.1 Management and Technical Support Organization

This subsection describes the organization, its functions and responsibilities, and the qualifications of personnel. It is directed to activities that include facility design, design review, design approval, construction management, testing, and operation of the plant. The FSAR will be updated in accordance with 10 CFR 50.71(e) to address the number of personnel that will be provided to perform these activities.

13.1.1.1 Design, Construction and Operating Responsibilities

Houston Lighting & Power (HL&P) was the project manager for the (then) four owners of STP 1 & 2 throughout licensing and construction. HL&P operated the units from 1988 until 1997, when STPNOC was formed as an operating company comprised of HL&P operating, engineering, maintenance, and administrative personnel. Since that time STPNOC has had exclusive responsibility and control over the physical design, construction, operation, and maintenance of STP 1 & 2. These responsibilities include planning and completing major modifications, refueling outages, and plant upgrades. STP 3&4 will be designed and constructed by NINA, augmented with STPNOC staff. Upon completing construction, STP 3&4 will each be turned over to STPNOC for operation with the same methods which succeeded for STP 1&2.

13.1.1.1.1 Design and Construction Responsibilities

Principal Site-Related Engineering Studies

1. Meteorology

A preoperational meteorological program for STP 1 & 2 was established at the site in July 1973 to provide those meteorological factors that bear upon plant design, operation, and safety. Data collected through September 1977 was used for design and licensing purposes. The monitoring system continued to collect data until 1982, at which time it was shut down for upgrading to meet then current requirements.

In 1994, a major upgrade was made to enhance the reliability and maintainability of the data collection systems by replacing the monitoring and communication systems. The existing primary tower was replaced, and the existing equipment shelters were refurbished for the new computer monitoring and communication systems. New instrumentation was installed at the 60-meter, 10-meter, and ground level positions on the primary tower and at the 10-meter level on the backup tower.

In 2005, additional upgrades were made on both the primary and backup towers, including new sonic probes, computers, digital recorders, LCD color monitors, uninterruptible power supplies, and wireless Ethernet equipment. The backup propane generators were also replaced in 2005.

In late 2006, new dew point instruments were installed on the primary meteorological tower 10-meter and 60-meter levels to develop the relationship between dew point and elevation. This relationship will provide an understanding of the heat exchange efficiency of the forced-draft cooling towers to be used as the ultimate heat sinks for STP 3 & 4.

Bechtel Power Corporation (Bechtel) assessed the STP 1 & 2 meteorological data collection system for use with STP 3 & 4 in the following areas:

- The ability for the existing STP 1 & 2 system to provide data needed to adequately characterize the overall site vicinity meteorology for STP 3 & 4
- The completeness of the data set for preparing the STP 3 & 4 combined license application (COLA)
- The need for additional instrumentation on the existing meteorological tower and the use of regional representative data to supplement the existing data set.

In summary, meteorological data has been collected at the STP site from July 1973 to the present, an interval of more than 33 years. STPNOC understands very well and has substantial records of the meteorological conditions at the site with the exception of dew point data. Additional details about the meteorological program are presented in Subsection 2.3.3.

2. Geology and Seismology

The geological and seismological investigations and evaluations for STP 1 & 2 were conducted by Woodward-Clyde Consultants (WCC). A major portion of the field boring and sampling program, and some specialized laboratory and field studies associated with this work were done by subcontractors under the supervision of WCC personnel. The geotechnical investigations and analysis for the main cooling reservoir (MCR) and MCR-related facilities were conducted by McClelland Engineers, Inc. McClelland also provided consultant services and laboratory testing for MCR-related earthwork during the construction of STP 1 & 2. Design and evaluation activities in the STP 1 & 2 plant and reservoir areas in connection with earthwork and foundation construction were conducted by Brown & Root.

The geological and seismological investigations and evaluations for STP 3 & 4 were conducted by or under the direction of Bechtel, including geotechnical engineering studies for site characterization and foundation designs. Field work was initiated with the development of a Site Subsurface Investigation Boring Plan. MACTEC Engineering and Consulting (MACTEC), under the direction of Bechtel, was responsible for performance of the field investigation, which included a borehole drilling and sampling program, cone penetrometer tests, geotechnical laboratory testing, groundwater observation well installations, and specialized field and laboratory tests. Specialized testing included laboratory torsional shear and resonant column testing, downhole geophysical logging, and soil absorption distribution coefficient determinations. Geotechnical analyses for material properties, dynamic slope stability, bearing capacity, static and dynamic loading, and liquefaction were performed by Bechtel.

Hydrogeologic studies performed by Bechtel included a hydraulic gradient study to evaluate potential construction dewatering interactions with the MCR. In addition, to support the COLA, a hydrogeologic analysis was performed to evaluate the potential impacts of an accidental release of liquid effluent to ground and surface waters.

Additional studies included basic geologic and tectonic evaluations, determination of vibratory ground motion, and surface faulting evaluations. Geologic and seismic study results were incorporated into the geotechnical subsurface material and foundation evaluations, slope stability study, and embankment and dam evaluations. William Lettis & Associates provided geological investigation support to Bechtel, including data collection, review and analysis, and field reconnaissance to evaluate seismogenic and tectonic sources for determination of their potential to generate earthquakes resulting in surface fault rupture. A probabilistic seismic hazard analysis was performed by Risk Engineering, Inc. under the direction of Bechtel. This information, along with the geotechnical and geological evaluation results, was used to evaluate the site seismological conditions.

Overall direction of geological, hydrogeological, seismological, and geotechnical engineering studies was provided by Bechtel. Detailed information concerning the geological, seismological, and geotechnical engineering studies is provided in Subsection 2B.2.5. The hydrogeology studies are described in Subsection 2B.2.4.

3. Hydrology

Brown & Root initially developed the probable maximum flood from offsite areas for the site based upon hydrologic investigations of the Colorado River Basin previously made by the Fort Worth, Texas, District Office of the U.S. Army Corps of Engineers (USACE). Physical data, previous reports, and unpublished engineering studies, together with technical guidance, were made available by both the Fort Worth and Galveston District USACE offices. The resulting detailed information concerning hydrology is given in the STP 1 & 2 UFSAR Section 2.4.

Hydrologic investigations performed by Bechtel included a cooling pond study to evaluate performance of the MCR and to estimate the plant cooling water use with the addition of STP 3 & 4. In addition, the probable maximum flooding from offsite sources, potential dam failure of the MCR, and local intense precipitation were developed and their impact evaluated for safety considerations. Other hydrologic studies, including low water considerations, ice effects, and channel diversions, were conducted to support the COLA. Detailed information on the hydrologic investigations is provided in FSAR Section 2B.2.4.

4. Demography

Brown & Root performed the initial demographic studies relative to the population distribution near the plant for STP 1 & 2. HL&P updated those studies and revised the information in UFSAR Section 2.1.3.

Bechtel/Tetra Tech NUS performed the updated demographic studies relative to population near the site to support STP 3 & 4. Refer to Subsection 2B.2.1.3 for details.

5. Environmental Effects

Environmental monitoring programs have been in effect at STP for more than 20 years and there is an ample baseline from which to determine possible impacts on the environment due to construction activities on STP 3 & 4 and to evaluate future environmental monitoring. These programs are described in COLA Part 3, Environmental Report.

An Environmental Protection Control Plan provides for periodic review of all construction activities on STP 3 & 4 to ensure those activities conform to the environmental conditions set forth in the COL. If harmful effects or evidence of irreversible damage are detected by the monitoring program, STPNOC will provide the NRC with an analysis of the problem and a plan of action to mitigate detrimental effects or damage.

Design of Plant and Ancillary Systems

The review and approval of ABWR Common Engineering design documents is controlled by procedures. Evidence of design verification is entered into the design records of the responsible design organization.

STPNOC assigned Toshiba the responsibility to complete the plant-specific engineering design for STP 3 & 4 necessary for development of the COLA with STPNOC acting in a review and approval role. STPNOC contracted Toshiba to design the Ultimate Heat Sink and other systems described in Chapter 9 of the FSAR. Departures from the ABWR Design Control Document (DCD) are described in COLA Part 7. The fire protection section of the DCD was developed by GE.

NINA has continued these contracts for the completion of the design by Toshiba with the support of various subcontractors.

Review and Approval of Plant Design Features

Design control and review is performed in accordance with the Quality Assurance Program for STP 3 & 4 as described in the Quality Assurance Program Description (QAPD) for the design and construction phase and in FSAR Chapter 17. A complete discussion of human factors engineering is provided in FSAR Chapter 18.

Site Layout with Respect to Environmental Effects and Security Provisions

The specific location of STP 3 & 4 was influenced by several factors. It was desirable to locate the units far enough from the MCR to avoid additional dewatering difficulty caused by the head on the MCR tending to drive groundwater toward the new unit excavations. The best location for the STP 3 & 4 switchyard was to the north of the new units where transmission line interferences would be minimized.

Part of the considerations for the layout of the new units included evaluating the proximity of STP 1 & 2 and constructing the new units with minimal impact on the security of the operating units. The layout also maximized the available acreage to assure the new contiguous Protected Area would be as far as possible from public roadways consistent with other siting requirements (e.g., soil conditions and hydrology).

Development of Safety Analysis Report

Overall responsibility for preparing the FSAR as Part 2 of the COLA rests with the STP 3 & 4 Regulatory Affairs Department. Preparation of individual sections was assigned to the cognizant technical groups within STPNOC, Toshiba, or Bechtel as appropriate.

Review and Approval of Material and Component Specifications

All safety-related project specifications are reviewed in accordance with the QAPD for STP 3 & 4.

13.1.1.1.2 Pre-Operational Responsibilities

Proposed Plans for Development and Implementation of Staff Recruiting and Training

STPNOC has partnered with local community leadership, independent school district leaders, educators, colleges, business owners, and other industry in the development

of a community-based and regional-based education alliance. The long-term vision is to develop a workforce pipeline that would support attrition challenges and operational expansion strategies. The education alliance has progressed to three main community and regional committees and supporting subcommittees that address education resources, marketing and outreach strategies, grow-your-own-initiatives, and funding resources. One component of community-based workforce is providing the region's middle schools and high schools with relevant science, technology, engineering, and math skills (curriculum) required for a successful career in nuclear energy industry. Local and regional colleges are in the process of developing two- and four-year power and process technology degrees that compliment junior and high school curricula, and are directly transferable to meet the industry's present and emerging needs.

The plant staff training program is provided in Section 13.2. These plans will be substantially accomplished before preoperational testing begins.

13.1.1.1.3 Technical Support for Operations

Technical services and backup support for the operating organization will be available before the pre-operational and startup testing program begins and will continue throughout the life of the plant.

Engineering – As described in Subsection 13.1.1.2, the Engineering staff will provide technical support in the areas of nuclear, mechanical, structural, electrical, thermal-hydraulic, metallurgy and materials, and instrumentation and controls to support testing and operation of STP 3 & 4. Additional engineering contractors are available locally (e.g., Areva and Hurst Technologies) if outside contractual assistance is required.

Tokyo Electric Power (TEPCO) – TEPCO is an experienced operator of ABWRs in Japan. They have ABWR units in operation at Kashiwazaki, including the first ABWR that went into operation in 1997. STPNOC has contracted with TEPCO to provide expertise in the operation of ABWRs.

Plant Chemistry and Health Physics – Chemistry and health physics services will be shared between the four units once STP 3 & 4 are in commercial operation.

Fueling and Refueling Operations Support - The STP 1 & 2 Work Management Department has developed an "Outage Implementation and Planning Guideline" that has been used very successfully in refueling outages. The Guideline specifically and thoroughly addresses shutdown safety; outage management, preparation, scheduling, and implementation; and post-outage activities. The outage organization during an outage includes the outage director, project managers for each major maintenance area (e.g., refueling, turbine, containment), shift managers, chemistry manager, engineering duty manager, health physics manager, division manager for plant operations, and maintenance manager with a division manager for each discipline (mechanical, electrical, instrumentation & controls, air-operated/motor-operated valves). The plans for STP 3 & 4 refueling outages include the same level of personnel dedication and support as provided during STP 1 & 2 refueling outages.

Maintenance Support - The STP 1 & 2 Maintenance Department is part of the Generation Department and the Maintenance Manager reports directly to the Plant General Manager. The plans for STP 3 & 4 include the same organizational structure and same level of maintenance technical services and backup support for the operating organization as provided for STP 1 & 2.

Operations Support – The Operations Support Department (Ops Support) is the primary point of contact for the business planning effort in the Generation Department, coordinating and facilitating meetings to support the business plan and budgeting process on an on-going basis. In addition, Ops Support provides continuous oversight for each department, providing feedback to the department managers when changes or updates are required. Ops Support performs root cause analysis and apparent cause investigations for Generation organizations and other station organizations upon request. They also maintain the Corrective Action Program Database for Maintenance, Operations, Work Control, and other departments as required. Finally, procedure development is one of an integrated set of processes for the operation, maintenance, and support of the plant. Ops Support evaluates the need for new procedures or revision of existing procedures and implements activities required to write, conduct review and approval, and validate new and revised procedures.

Quality Assurance – The Quality Assurance Program Description is provided as a separate document.

Training – As described thoroughly in Section 13.2, the training programs to be utilized for STP 3 & 4 are very similar to those used for STP 1 & 2 with the technical exceptions appropriate to the different technologies.

Safety Review – The Plant Operations Review Committee (PORC) advises the Plant General Manager on all matters related to nuclear safety at STP 1 & 2. The PORC is composed of six members, who are appointed by the Plant General Manager from senior experienced onsite individuals, at the manager level or equivalent, representing each of the following disciplines: engineering, operations (SRO), chemistry, health physics, quality, and maintenance. A separate PORC will be established for STP 3 & 4. The PORC is responsible for reviewing the following and recommending approval or disapproval to the Plant General Manager:

- All safety-related station administrative procedures and changes thereto
- Safety evaluations for (1) procedures, (2) changes to procedures, structures, components, or systems, and (3) tests or experiments completed under the provisions of 10CFR50.59 to verify that such actions did not require prior NRC approval
- Proposed (1) procedures, (2) changes to procedures, structures, components, or systems, and (3) tests or experiments completed under the provisions of 10CFR50.59 which may require prior NRC approval
- All required programs by Technical Specification and the Technical Requirements Manual and changes thereto

- All proposed changes to the Technical Specifications or the Operating License
- All reportable events
- Reports of significant operating abnormalities or deviations from normal and expected performance of plant equipment or systems that affect nuclear safety
- Reports of unanticipated deficiencies in the design or operation of structures, systems, or components that affect nuclear safety
- Security Plan and implementing procedures and changes thereto
- Emergency Plan and implementing procedures and changes thereto
- Process Control Program and implementing procedures and changes thereto
- Offsite Dose Calculation Manual and implementing procedures and changes thereto
- Special reviews, investigations, or analyses and reports thereon as requested by the Plant General Manager or the Senior Management Team (SMT)
- Reports of any accidental, unplanned, or uncontrolled radioactive release including the preparation of reports covering evaluation, recommendations, and disposition of the corrective action to prevent recurrence and the forwarding of these reports to the Plant General Manager and to the SMT
- Reports of violations of codes, regulations, orders, Technical Specifications, or Operating License requirements having nuclear safety significance or reports of abnormal degradation of systems designed to contain radioactive material
- Fire Protection Program, quality-related implementing procedures and changes thereto.

Fire Protection - STP 1 & 2 currently has a successful Fire Control Program, which will be modified to include STP 3 & 4. A trained plant fire brigade will be equipped and available at all times. Each shift fire brigade will consist of five members of the shift crew with specific personnel designated to serve as the fire brigade leader, two members with safe shutdown systems training, and two other qualified members. The Shift Supervisor/Manager cannot be the fire brigade leader.

An annual physical examination will determine whether there are medical reasons for disqualifying candidates for fire brigade membership or for removing existing members from the brigade.

Fire brigade meetings to review changes in the fire protection program and other subjects as necessary will be conducted quarterly for each shift and requalification training will be conducted such that initial fire brigade training topics are covered at least once every two years.

Fire drills will be conducted periodically to established training objectives and critiqued to determine how well the training objectives are met. If a person assigned to fire brigade duties does not attend at least two drills every twelve months, that person will be removed from fire brigade duties, except training and drills, until that person has attended a drill(s) to make up for the deficiency.

Refer to Subsection 13.1.2.2. for a description of the functions and responsibilities of the Fire Protection Coordinator.

Emergency Coordination - The Emergency Plan submitted as Part 5 of the COLA fully describes the technical services and backup support for the operating organization that will be available before preoperational and startup testing begins and will continue throughout the life of the plant in the area of emergency coordination.

13.1.1.2 Organizational Arrangement

Figure 13.1-1 is the organization chart reflecting the NINA organization for design and construction of STP 3 & 4. The STP 3 & 4 team is focused on the design, construction, and testing of STP 3 & 4. Ultimate responsibility for design, procurement, construction, testing,and quality assurance, of STP 3 & 4 rests with the NINA President and CEO.

Figure 13.1-2 is the organization chart reflecting the STPNOC corporate structure for Operations, which provides line responsibility for operation of the company. The organization for STP 3 & 4 has been separated from STP 1 & 2 to ensure the STP 1 & 2 team is focused on the safe and reliable operation of STP 1 & 2. The STP 3 & 4 team is focused on preparations for the operational phase and operation of STP 3 & 4. Ultimate responsibility for operation of STP 3 & 4 rests with the STPNOC President and CEO.

There are no fossil power units at STP; when STP 3 & 4 are complete, there will be four nuclear power units on the site. Therefore, there is no separation of the “nuclear-oriented” part of the organization because the entire STPNOC organization is and will continue to be “nuclear-oriented.”

The current STP 3 & 4 project organization is provided in Figures 13.1-1 and 13.1-2. Modifications and additions to the organizations to reflect added functional responsibilities due to adding two nuclear plants to the South Texas Project Electric Generation Station site power generation capacity will consist of expanding the STP 3 & 4 organization as necessary to support the two additional units and transitioning that organization to STPNOC as appropriate. The number of persons to be assigned to each unit with responsibility for the project is preliminarily estimated to be 405.

The Vice President, Engineering & Constructionand Project Director reports to the NINA Chief Operating Officer, and is responsible for activities involved with the engineering, design, and construction of STP 3 & 4. The organization chart for Engineering & Construction is provided in Figure 13.1-1.

The Senior Vice President, Oversight & Regulatory Affairs reports to the NINA President and Chief Executive Officer, and is responsible for quality assurance,

construction oversight, licensing, probabilistic risk assessment, and regulatory compliance. Refer to Figure 13.1-1

The Plant General Manager reports to the STPNOC Senior Vice President during the constructions phase, and is responsible for activities related to the preparation for operation and operational program development of STP 3 & 4.During the construction phase the Plant General Manager will be matrixed to the Vice President, Engineering & Construction and Project Director. Functional responsibilities for STP 3 & 4 plant management will not be added to the existing STP 1 & 2 organization. However, it is anticipated that certain functions and responsibilities will be shared between the four units, such as operations support, chemistry, health physics, environmental support, and security.Refer to Figure 13.1-2 for the operational phase organization of STPNOC.

Engineering and Design of STP 3 & 4

STPNOC selected the ABWR design certified by 10 CFR 52, Appendix A and STPNOC (now NINA) contracted Toshiba to complete the plant-specific engineering design with STPNOC acting in a review and approval role. Toshiba has extensive experience with engineering and design for the ABWR having participated in the design and construction of three operating ABWRs. Toshiba's experience with engineering on boiling water reactors is well documented world-wide.

STPNOC contracted Toshiba to design the Ultimate Heat Sink and other systems described in Chapter 9 of the FSAR.

NINA continued the contract for Engineering, Procurement, and Construction (EPC) of the facilities with Toshiba America Nuclear Energy (Toshiba). The design and construction of STP 3 & 4 will be completed by Toshiba acting in conjunction with subcontractors including Westinghouse and Sargent & Lundy. Toshiba will have overall responsibility for design and configuration control. Sargent & Lundy will provide architect/engineer services. Westinghouse will provide engineering services, including design of instrumentation and controls.

Technical Support for Operations

Refer to the descriptions provided in Subsection 13.1.1.1.3.

13.1.1.3 Qualifications

The qualification requirements for personnel (education, experience) providing technical support for STP 3 & 4 operations will be the same as those approved for STP 1 & 2. It is anticipated that certain functions and responsibilities might be shared between the four units, such as operations support, chemistry, health physics, environmental support, and security, albeit most of the functions will be separated initially. The FSAR will be updated in accordance with 10 CFR 50.71(e) to address the number of personnel that will provide technical support for operations.

Qualification and training of STPNOC personnel conform to the regulatory position of RG 1.8. The QAPD addresses the qualification, training, and certification of personnel.

These are the generally accepted basic qualification requirements for the classes of positions identified in Subsection 13.1.1.2:

Executive

Education: Bachelor's degree
Experience: 15 years, including 10 years of management experience

Manager

Education: Bachelor's degree or 5 years experience
Experience: 10 years experience, including 3 years of supervisory or management experience

Supervisor

Education: Bachelor's degree or 5 years experience
Experience: 8 years

Within STPNOC, the person whose job position most closely corresponds to that identified as "engineer-in-charge" is the President & Chief Executive Officer.

13.1.2 Operating Organization

The operating organization for STP 3 & 4 will meet the guidelines of RG 1.33 and RG 1.8. Additionally, onsite review and rules of practice will meet the guidelines of NEI-06-14 as addressed in Section 17.5. The STP 3 & 4 fire protection program will mirror the existing program for STP 1 & 2 and thus will meet applicable requirements. The operating organization will be consistent with one of the options in the Commission's Policy Statement on Engineering Expertise on Shift and will meet TMI Action Plan items I.A.1.1 and I.A.1.3 of NUREG-0737 for shift technical advisor and shift staffing.

The Composite Site Security Plan provided in Part 8 of the COLA meets the applicable requirements for a physical protection plan.

All operating organization positions will be filled with personnel meeting the appropriate qualifications no later than six months prior to fuel load in each unit.

13.1.2.1 Plant Organization

13.1.2.2 Plant Personnel Responsibilities and Authorities

The functions and responsibilities of various positions at STPEGS, including a specific succession to responsibility for overall operation of the plant in the event of absences, incapacitation of personnel, or other emergencies, are described in this section.

The chain of command is the line of authority responsible for the overall safe operation of the station, and the protection and safety of the public and plant personnel. The operations chain of command authority begins with President & Chief Executive Officer, Site Vice President, then continues through successive lower levels of

management: Plant General Manager, Operations Manager, Operations Division Manager, Shift Supervisor/Manager, Unit Supervisor.

It is anticipated that certain functions and responsibilities will be shared between the four units, such as operations support, chemistry, health physics, environmental support, and security.

Plant General Manager

The Plant General Manager is responsible for the safe, reliable, and efficient startup, operation, maintenance, and refueling of the units, as well as adherence to all requirements of the Operating Licenses and the Technical Specifications.

Operations Manager

The Operations Manager reports to the Plant General Manager. He is responsible for planning overall activities and work of Plant Management personnel in cooperation with other department heads to develop an integrated plant operations program with the primary objectives of reactor safety and plant reliability. He has the following authorities and responsibilities:

- Provide guidance and direction to the Training Department concerning content of initial and requalification training programs for all operating personnel in order to provide a highly qualified and efficient operating force.
- Develop, monitor and control the Plant Management budget.
- Perform other duties assigned by the Plant General Manager.
- Conduct periodic observation of operations activities in accordance with the Field Observation Program.

Operations Division Managers (SRO)

Each Unit Operations Manager reports to the Operations Manager and ensures that the units are operated in accordance with plant procedures and Operating License requirements. The Shift Operations organization required by the Technical Specifications is shown in Figure 13.1-3.

The Unit Operations Managers may issue written Night Orders each week to inform operations personnel of current and up-coming events, work priorities, management expectations, lessons learned, policy information or explanation, special data collection requirements, and any other information regarding the safe, reliable operation of the units. Night Orders are not used to amend, revise, or delete an approved procedure, however, they may include additional information not provided for in an existing procedure. Night Orders are dated and signed by the author as they are originated and the Shift Supervisor/Manager is responsible for implementing Night Orders.

The Unit Operations Managers have the following authorities and responsibilities:

- Provide guidance and direction to supervisors to ensure that the required quality of work is achieved and that approved operating procedures and practices are followed
- Professional development of the Shift Supervisor/Managers
- Ensure the plant is operated in accordance with plant procedures and operating license requirements
- Ensure that Operations personnel are adequately prepared for special testing or other complex or infrequently performed evolutions
- Approve Unit work schedules
- Perform those duties assigned by the Operations Manager
- Assist the Operations Manager in carrying out all departmental duties
- Approve the Operations shift schedule
- Function as the Operations Manager in his/her absence
- Conduct periodic observation of Operations activities in accordance with the Field Observation Program
- Maintain a Senior Reactor Operator (SRO) license
- Perform duties of the Emergency Response Organization Operations Manager

Shift Supervisor/Manager (SRO)

The Control room command function is the authority to operate the unit, including shutdown, when required. This authority includes directing operations and making decisions on all matters affecting operations (e.g., implementation of Technical Specification limiting conditions for operation, call out of personnel, emergency operations, etc.). The Shift Supervisor/Manager assigned to each unit is responsible for the Control room command function.

The Shift Supervisor/Manager reports to the respective Operations Division Manager for operational concerns and has the following general authorities and responsibilities:

- Assure that shift operations are performed in accordance with approved procedures, the Operating Licenses, and the Technical Specifications
- Maintain conservative decision-making with respect to safety of the plant and plant personnel

- Maintain an overview of plant conditions and direct operations, with reactor safety and the protection of the health and safety of the public and plant personnel being of highest priority
- Remain in the supervisory role during all plant conditions to provide effective leadership and direction to the operating crew
- Maintain an environment that supports critically assessing crew and individual performance in all aspects of training and operations
- Ensure employee conduct both in the Control room and in the field is maintained in a professional and business like manner
- Maintain the environment within the Control room and in the field, in a fashion which supports safe, efficient operation of the plant
- Limit the number of on shift evolutions in progress so that each can be safely and effectively completed
- Provide close oversight of critical operational activities
- Oversee the operating crew's training and professional development
- Provide support of Work Management Process and ensures execution of scheduled work activities
- Maintain an SRO license

The Shift Supervisor/Manager may be assigned the authority and responsibility of the Operations Manager in his absence.

Unit Supervisor (SRO)

The Unit Supervisor is responsible to the Shift Supervisor/Manager for supervising the Plant Operations personnel assigned to his unit and for directing control room activities to assure safe and efficient unit operation in accordance with the Operating Licenses, Technical Specifications, and approved procedures during his shift. He is cognizant of all work or tests which may affect the operation of the unit in accordance with administrative control procedures. He directly supervises control room activities during startup, shutdown, abnormal, and emergency conditions. The Unit Supervisor may assume the duties and responsibilities of the Shift Supervisor/Manager in the event he is unavailable.

The Unit Supervisor has the following general authorities and responsibilities:

- Coordinate the activities of the Reactor Operators and other operations and plant personnel to achieve safe, reliable and efficient unit operation
- Direct the operation of plant equipment and systems

- Direct the Reactor Operators during normal and transient conditions to ensure proper performance of their duties
- Coordinate surveillance testing and tagging operations
- Conduct periodic observation of Operations activities in accordance with the Field Observation Program
- Maintain an SRO license

Reactor Operator (RO)

The Reactor Operator reports to the Unit Supervisor of his assigned unit and is responsible for the safe and efficient operation of the control room equipment of his assigned unit in accordance with the Operating Licenses, Technical Specifications, and approved procedures during his shift. The Reactor Operator has the following duties:

- Initiate the immediate actions necessary to maintain the unit in a safe operating condition during abnormal and emergency conditions
- Perform a manual Reactor Trip or manual actuation of Emergency Safety Systems as required to mitigate consequences of transients or accidents
- Maintain required records, logs, and charts of unit data, shift events, and performance checks
- Monitor and control unit parameters and unit equipment from the control room
- Initiate requests for equipment repairs, and clears and tags equipment as directed by shift supervision
- Perform operations and surveillances in accordance with approved procedures
- Operate all equipment controlled from the main control board area
- Monitor equipment and system parameters using normal and redundant indications
- Initiate or perform operator actions required by normal, off-normal, emergency, and annunciator response procedures applicable to the main control board area
- Conduct periodic observation of Operations activities in accordance with the Field Observation Program
- Act as Field Supervisor when assigned by the Shift Supervisor/Manager:

- Supplement Operations Day Staff personnel when assigned by the Shift Supervisor/Manager
- Perform Emergency Plan duties such as E-Plan Communicator as required

- Maintain an RO license

Shift Technical Advisor

The Shift Technical Advisor, (when activated) reports to the Shift Supervisor/Manager and has the following responsibilities. At no time does the Shift Technical Advisor perform control board manipulations.

- Provide advisory technical support to the Shift Supervisor/Manager in the areas of thermal dynamics, reactor engineering, and plant analysis with regard to the safe operation of the unit
- Review planned activities to assess whether special considerations or precautions are warranted i.e., Reactivity Management, and make appropriate recommendations to the Shift Supervisor/Manager
- Perform the following duties upon entry into the EOPs or as directed by the Shift Supervisor/Manager:
  - Identify himself/herself as the STA to the crew
  - Monitor Critical Safety Functions (CSFs) when required
  - Monitor EOP progression to ensure transitions are correct
  - Monitor Conditional Information Page to ensure actions are taken when required
  - Immediately inform Unit Supervisor and/or Shift Supervisor/Manager upon reaching an Orange or Red path condition
  - Communicate CSF status during transition between EOPs
  - Make a qualitative assessment of plant parameters during and following plant events and transients to determine correct plant response and potential core damage
- Perform independently of the crew as follows:
  - Monitor diverse indications
  - Focus on cause of the event to establish mitigation strategy
  - Monitor for additional events, which will complicate the recovery

  - Determine if plant responds as expected
  - Evaluate procedure implementation effectiveness for terminating or mitigating the accident and make recommendations
- Maintain the “big picture” as follows:
  - Remain in the control room
  - Perform independent assessment and review
- Maintain an SRO license

Plant Operator

The Plant Operator reports to the Unit Supervisor of his assigned unit and is responsible for safe operation of systems and equipment as directed from the control room of his assigned unit:

- Monitor plant parameters as required to be aware of plant conditions, performs required operational checks
- Initiate requests for equipment repairs, clears and tags equipment as directed
- Maintain required logs, charts, and records of plant data, shift events and performance checks on his shift
- Maintain awareness of plant maintenance in progress for respective watchstation
- Maintain narrative logbook and area log readings
- Respond (if qualified) to abnormal occurrences (e.g., fire, HAZMAT spills)
- Perform duties as Emergency Plan Communicator when required
- Act as Fire Brigade Leader and/or Spill Response Coordinator if required

Administrative Aide

In accordance with NUREG – 0737, item I.A.1.3, administrative functions that detract from the management responsibility for assuring the safe operation of the plant are delegated to other Operations personnel not on duty in the control room. An Administrative Aide has been assigned to perform routine administrative duties and processes such as routing records, logs, and correspondence for the Control Room Operations staff as required.

Maintenance Manager

The Maintenance Manager reports to the Plant General Manager and is responsible for mechanical, electrical, instrument and control (I&C), and support activities.

Responsibilities consist of ensuring that mechanical, electrical, and I&C systems of all plant facilities are maintained to assure their dependability, reliability and operating efficiency to comply with the requirements of the Operating License and the Technical Specifications. The Maintenance Manager is also responsible for corrective and preventive maintenance of both units and common support facilities of the plant.

Radiation Protection Manager

The Radiation Protection Manager is responsible for managing the Radiation Protection and ALARA Programs in accordance with current regulations, license requirements, and policy. Specific responsibilities include:

- Administer the site Respiratory Protection Program
- Provide technical support in the areas of ALARA and radiation protection
- Track and trend radiation work performance, recommending actions as necessary to correct adverse trends
- Review incidents involving radiation protection controls, identifying root causes, concerns, and corrective actions.
- Monitor the receipt and shipment of radioactive materials
- Assure calibration services for instrumentation used to implement the Radiation Protection Program
- Participate in the development and approval of training programs related to work in restricted areas
- Recommend radiation exposure goals to management
- Develop reports required by regulatory agencies and industry groups to present station performance with respect to Radiation Protection and ALARA
- Provide for dosimetry services including personnel dose record retention and personnel dose information management as required to support the Radiation Protection and ALARA programs
- Provide for radiological environmental monitoring

Fire Protection Coordinator

Responsibility for implementation of the Fire Protection Program has been delegated to the Fire Protection Coordinator, who is an individual knowledgeable through education, training, and/or experience in fire protection and nuclear safety. Other personnel are available to assist the Fire Protection Coordinator as necessary.

The Fire Protection Coordinator, or a person available for consultation, is a graduate of an accredited engineering or fire science curriculum and has a minimum of six years

applicable experience, three of which have been in the area of fire protection. Education and/or experience acceptable to the Society of Fire Protection Engineers for full member status may be considered as equivalent qualifications.

The Fire Protection Coordinator has been delegated responsibility for development and administration of the Fire Protection Program including administrative controls, periodic fire prevention inspections, fire protection systems/equipment inspections and testing, evaluations of work activities for transient fire loads, identification of fire protection training requirements, and pre-fire planning. The Fire Protection Coordinator ensures that an annual self-assessment of the Fire Protection program be performed. Credit for the self-assessment may be taken for audits. The Fire Protection Coordinator is also responsible for the plant fire protection review of proposed work activities.

13.1.2.3 Operating Shift Crews

The minimum operating shift crew is listed in the Technical Specifications provided as Part 4 of the COLA and is depicted in Figure 13.1-3.

In addition to the operating shift crew, a Radiation Protection Technician will be onsite at all times when fuel is in either reactor to ensure that adequate radiation protection coverage is provided for station personnel. The Radiation Protection Technician will inform the Shift Supervisor/Manager of plant radiological conditions and may be shared amongst the operating units.

A site Fire Brigade of at least five personnel who may have normal shift duties, but are trained specifically in fire protection, is maintained on site and may be shared amongst the four units.

13.1.3 Qualifications of Nuclear Plant Personnel

Key personnel assigned to STP 3 & 4 have had extensive experience in steam electric stations in their respective areas of responsibility, and they will be given nuclear training where necessary to prepare them for their specific assignments at the plant. Section 13.2 discusses the nuclear training program for these personnel.

13.1.3.1 Qualification Requirements

The qualification requirements for plant supervisory, operating, technical, and maintenance support personnel at STP 3 & 4 meet or exceed the guidance given on personnel qualifications contained in RG 1.8. Plant operating personnel meet the experience requirements of Generic Letter
84-16.

13.1.3.2 Qualifications of Plant Personnel

The qualification requirements for plant supervisory, operating, technical, and maintenance support personnel at STP 3 & 4 will meet or exceed the guidance given on personnel qualifications contained in RG 1.8. Plant operating personnel meet the experience requirements of Generic Letter 84-16.

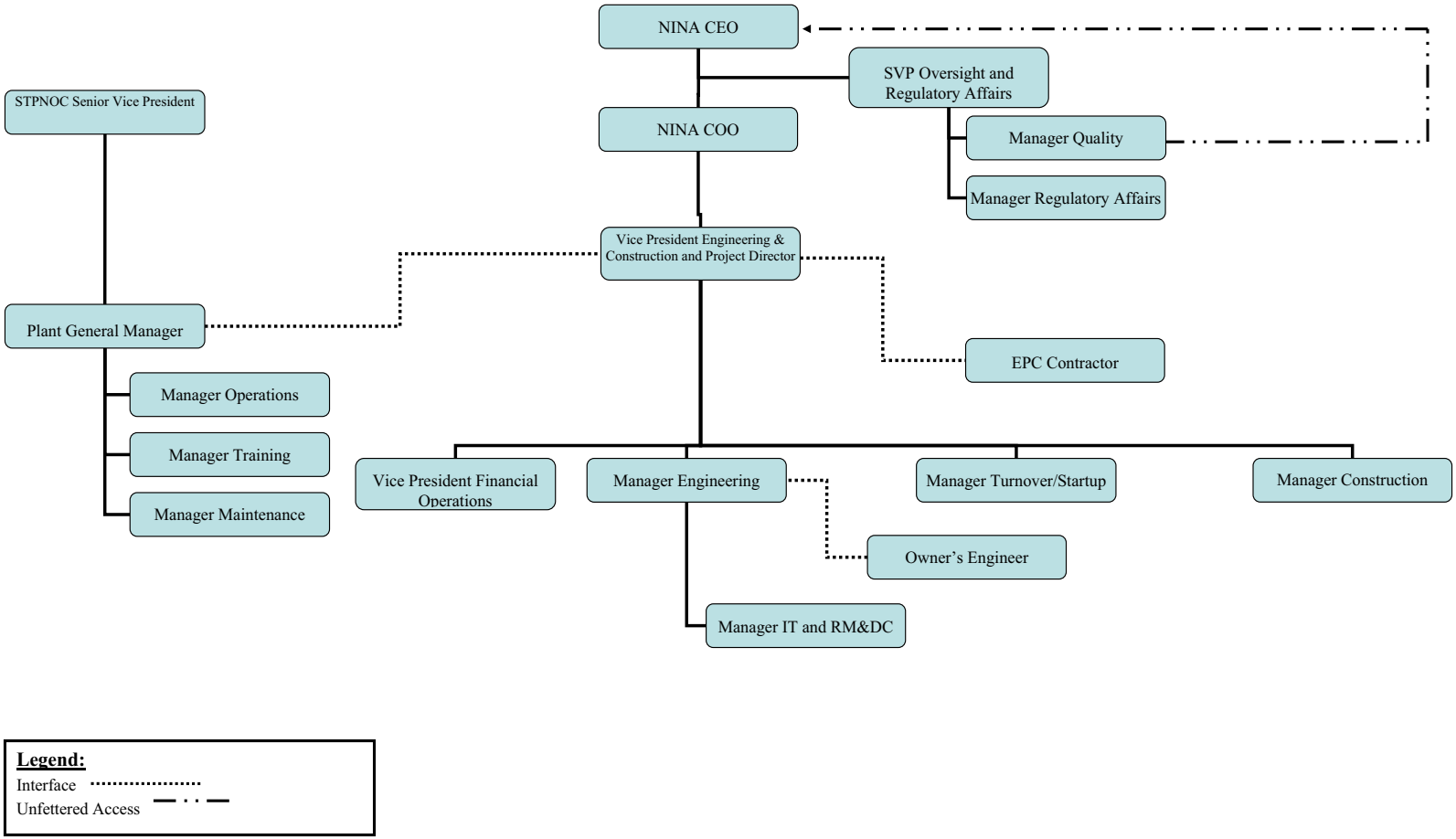

Figure 13.1-1 NINA Organization

STPNOC Organization for Operations

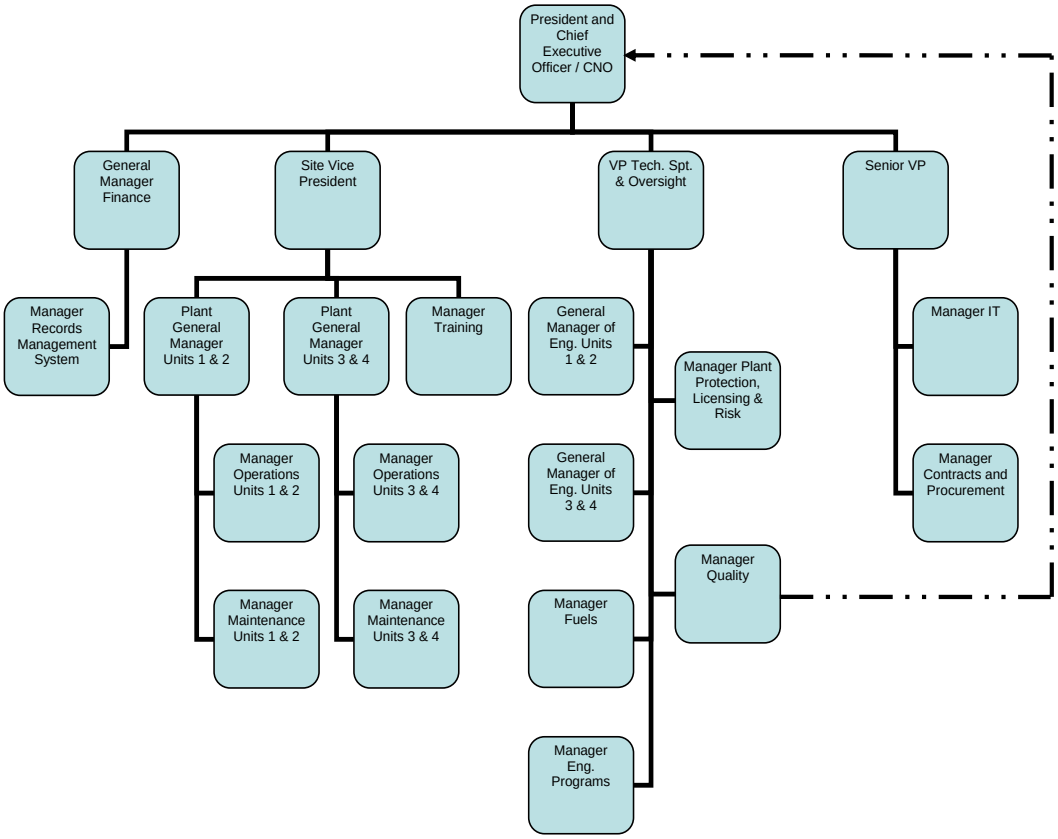

Figure 13.1-2 STPNOC Organization

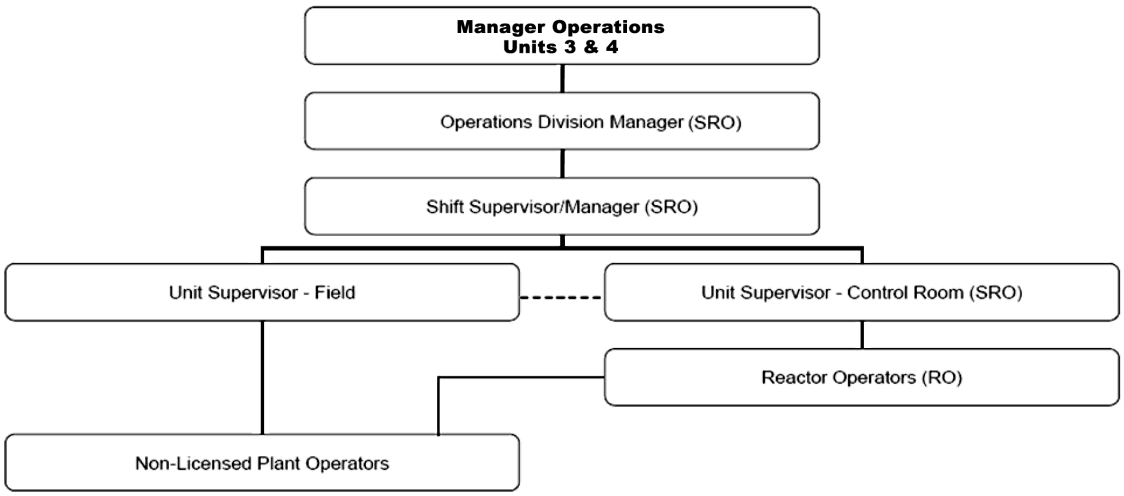

Figure 13.1-3 STP 3 & 4 Shift Staffing Organization

13.2 Training

NEI 06-13, “Template for an Industry Training Program Description”, including all subsections, is incorporated by reference with the following supplement.

13.2.3 COL License Information

13.2.3.1 Incorporation of Operating Experience

The following standard supplement addresses COL License Information Item 13.1 and is incorporated by reference. NEI 06-13, Template for an Industry Training Program Description, provides a complete generic program description for use with combined license applications. The document reflects guidance provided by the NRC and by industry-NRC discussions on training-related issues. A main objective of this program is to assist in expediting NRC review and issuance of the combined license.

Chapter 1 of NEI 06-13 states “The results of reviews of operating experience are incorporated into training and retraining programs in accordance with the provisions of TMI Action Item I.C.5, Appendix 1A.”

13.3 Emergency Planning

The information in this section of the reference ABWR DCD, including all subsections and tables, is incorporated by reference with the following supplement.

13.3.1 COL License Information

13.3.1.1 Emergency Plans

The following site-specific supplemental information addresses COL License Information Item 13.2.

A comprehensive site Emergency Plan for STP is provided in COLA Part 5.

Commitment:

Commitments to incorporate specific items in the Emergency Plan implementing procedures made in letter U7-C-NINA-NRC-120055 will be verified complete as part of ITAAC closure for the ITAAC listed in Part 9 Table 4.0-1 Item 10.0.

13.4 Review and Audit

The information in this section of the reference ABWR DCD is incorporated by reference with the following supplement.

13.4.1 COL License Information

The COL License Information item in reference ABWR DCD Subsection 13.4.1 states in part that provisions for the independent assessment of activities for safety enhancement should be provided in accordance with TMI Action Item I.B.1.2. Appendix B to NUREG-0933 indicates that TMI Action Item I.B.1.2 regarding an independent safety engineering group is not a residual generic safety issue that is applicable to operating and future reactor plants. South Texas Project does not maintain an Independent Safety Engineering Group.

13.4S Operational Program Implementation

Commission Paper SECY-05-0197 focused on those programs that meet the following three criteria: required by regulation, reviewed in the combined license (COL) application, and inspected to verify program implementation as described in the Final Safety Analysis Report (FSAR). Descriptions of these operational programs, consistent with the definition of “fully described” in the Staff Requirements Memorandum for SECY-05-0197, are provided in the FSAR sections noted in Table 13.4S-1. Implementation milestone commitments are also provided in the table. In accordance with SECY-05-0197, because these programs and their implementation are fully described, they will not require inspections, tests, analyses, and acceptance criteria.

Table 13.4S-1 Operational Programs Required by NRC Regulation and Program Implementation

Item	Program Title	Program Source (Required By)	FSAR (SRP) Section	Implementation	
				Milestone*	Requirement
1	Inservice Inspection Program	10 CFR 50.55a(g)	5.2.4 6.6	Commercial operation	10 CFR 50.55a(g) ASME Section XI IWA-2430(b)
2	Inservice Testing Program	10 CFR 50.55a(f) 10 CFR 50, App A	3.9.6 5.2.4	After generator on line on nuclear heat	10 CFR 50.55a(f) ASME OM Code
3	Environmental Qualification Program	10 CFR 50.49(a)	3.11	Fuel Load	License Condition
4	Preservice Inspection Program	10 CFR 50.55a(g)	5.2.4 6.6	Completion prior to initial plant startup	10 CFR 50.55a(g) ASME Section XI IWB-2200(a)
5	Reactor Vessel Material Surveillance Program	10 CFR 50.60 10 CFR 50, App H	5.3.1	Fuel Load	License Condition
6	Preservice Testing Program	10 CFR 50.55a(f)	3.9.6	Fuel Load	License Condition
7	Containment Leakage Rate Testing Program	10 CFR 50.54(o) 10 CFR 50, App A (GDC 32) 10 CFR 50, App J 10 CFR 52.47(a)(1)	6.2.6	Fuel load	10 CFR 50, App J Option A - Section III Option B - Section III.A

* Implementation will occur prior to the milestone indicated.

Table 13.4S-1 Operational Programs Required by NRC Regulation and Program Implementation (Continued)

Item	Program Title	Program Source (Required By)	FSAR (SRP) Section	Implementation	
				Milestone*	Requirement
8	Fire Protection Program	10 CFR 50.48	9.5.1	Receipt of fuel onsite (as pertains to fire protection for new fuel storage) Fuel load (complete program)	License Condition
9	Process and Effluent Monitoring and Sampling Program				
	Radiological Effluent Technical Specifications/ Standard Radiological Effluent Controls (RETS/SREC)	10 CFR 20.1301 10 CFR 20.1302 10 CFR 50.34a 10 CFR 50.36a 10 CFR 50, App I, Sect II & IV	11.5	Fuel Load	License Condition
	Offsite Dose Calculation Manual (ODCM)	Same as above	11.5	Fuel Load	License Condition
	Radiological Environmental Monitoring Program (REMP)	Same as above	11.5	Fuel Load	License Condition
	Process Control Program (PCP)	Same as above	11.4	Fuel Load	License Condition

* Implementation will occur prior to the milestone indicated.

Table 13.4S-1 Operational Programs Required by NRC Regulation and Program Implementation (Continued)

Item	Program Title	Program Source (Required By)	FSAR (SRP) Section	Implementation	
				Milestone*	Requirement
10	Radiation Protection Program	10 CFR 20.1101	12.5S	The applicable portions of the Radiation Protection Program will be implemented by the following milestones: Initial receipt of byproduct, source or special nuclear materials (excluding exempt quantities) Receipt of fuel onsite Fuel load First shipment of radioactive waste	License Condition
11	Non-Licensed Plant Staff Training Program	10 CFR 50.120 10 CFR 52.78	13.2.2	18 months prior to scheduled fuel load	10 CFR 50.120(b)
12	Reactor Operator Training Program	10 CFR 55.13 10 CFR 55.31 10 CFR 55.41 10 CFR 55.43 10 CFR 55.45	13.2.1	18 months prior to scheduled date of fuel load	License Condition
13	Reactor Operator Requalification Program	10 CFR 50.34(b) 10 CFR 50.54(i) 10 CFR 55.59	13.2.1	Within 3 months after issuance of an operating license or the date the Commission makes the finding under 10 CFR 52.103(g)	10 CFR 50.54(i-1)

* Implementation will occur prior to the milestone indicated.

Table 13.4S-1 Operational Programs Required by NRC Regulation and Program Implementation (Continued)

Item	Program Title	Program Source (Required By)	FSAR (SRP) Section	Implementation	
				Milestone*	Requirement
14	Emergency Planning	10 CFR 50.47 10 CFR 50, App E	13.3	Full participation exercise conducted within 2 years of scheduled date for initial fuel load	10 CFR 50, App E.IV.F.2a(ii)
				Onsite exercise conducted within 1 year before the scheduled date for initial fuel load	10 CFR 50, App E.IV.F.2a(ii)
				Review the Emergency Plan for STP 1 & 2 and the Emergency Plan for STP 3 & 4 to identify and reconcile any differences within 270 days prior to the scheduled initial fuel load of STP 3. Combine the plans into a single Station Emergency Plan and submit it to the NRC as required by 10 CFR 50.54q no later than 180 days prior to initial fuel load of STP Unit 3.	
				Applicant's detailed implementing procedures for its emergency plan submitted no less than within 180 days prior to scheduled date for initial fuel load	10 CFR 50, App E.V

* Implementation will occur prior to the milestone indicated.

Table 13.4S-1 Operational Programs Required by NRC Regulation and Program Implementation (Continued)

Item	Program Title	Program Source (Required By)	FSAR (SRP) Section	Implementation	
				Milestone*	Requirement
15	Security Program	10 CFR 50.34(c)	13.6.1		
	Physical Security Plan	10 CFR 73.55 10 CFR 73.56 10 CFR 73.57 10 CFR 73.58 10 CFR 26		Fuel Receipt (Protected Area)	License Condition
	Safeguards Contingency Plan	10 CFR 50.34(d) 10 CFR 73, App C		Fuel Receipt (Protected Area)	License Condition
	Training and Qualification Plan	10 CFR 73, App B		Fuel Receipt (Protected Area)	License Condition
	Cyber Security Program	10 CFR 73.54	~~13.6.1~~ 13.6.6	Fuel Receipt (Protected Area)	License Condition
	Fitness for Duty	10 CFR 26	13.7	Fuel Receipt (Protected Area)	License Condition
	FFD Program (Construction-Mgt & Oversight Personnel)	10 CFR Part 26 Subparts A-H, N and O	13.7	Prior to initiating 10 CFR 26 construction activities	10 CFR 26
	FFD Program (Construction-Workers & First Line Supv.)	10 CFR Part 26 Subparts K	13.7	Prior to initiating 10 CFR 26 construction activities	10 CFR 26

* Implementation will occur prior to the milestone indicated.

Table 13.4S-1 Operational Programs Required by NRC Regulation and Program Implementation (Continued)

Item	Program Title	Program Source (Required By)	FSAR (SRP) Section	Implementation	
				Milestone*	Requirement
	FFD Program for security personnel	10 CFR Part 26 Subparts A-H, N and O 10 CFR Part 26 Subparts A-I, N and O	13.7	Prior to initiating 10 CFR 26 construction activities Prior to the earlier of: *(a)* Receipt of SNM in the form of fuel assemblies *(b)* Establishment of a protected area, or *(c)* 10 CFR 103(g) finding	10 CFR 26
	FFD Program for FFD Program personnel	10 CFR Part 26 Subparts A, B, D-H, N, O and C per licensee's discretion	13.7	Prior to initiating 10 CFR 26 construction activities	10 CFR 26
	FFD Program	10 CFR Part 26 Subpart K	13.7	Prior to initiating 10 CFR 26 construction activities	10 CFR 26
	FFD Program for persons required to physically report to the Technical Support Center (TSC) or Emergency Operations Facility (EOF)	10 CFR Part 26 Subparts A-I, N and O, except for Parts 26.205-209		Prior to the conduct of the first full-participation emergency preparedness exercise under 10 CFR Part 50, App. E, Section F.2.a	10 CFR 26

* Implementation will occur prior to the milestone indicated.

Table 13.4S-1 Operational Programs Required by NRC Regulation and Program Implementation (Continued)

Item	Program Title	Program Source (Required By)	FSAR (SRP) Section	Implementation	
				Milestone*	Requirement
	FFD Program for operation	10 CFR Part 26 Subparts A-I, N and O, except for individuals listed in Part 26.4(b) who are not subject to Part 26.205-209		Prior to the earlier of: *(a)* Establishment of a protected area, or *(b)* 10 CFR 52.103(g) finding	10 CFR 26
16	Quality Assurance Program - Operation	10 CFR 50.54(a) 10 CFR 50, App A (GDC 1) 10 CFR 50, App B	17.5S	30 days prior to scheduled date for initial fuel load	10 CFR 50.54(a)(1)
17	Maintenance Rule	10 CFR 50.65	17.6S	Fuel load authorization per 10 CFR 52.103(g)	10 CFR 50.65(a)(1)
18	Motor-Operated Valve Testing	10 CFR 50.55a(b)(3)(ii)	3.9.6	Fuel Load	License Condition
19	Initial Test Program	10 CFR 50.34 10 CFR 52.79(a)(28)	14.2S	First construction test (Construction Test Program) First preoperational test (Preoperational Test Program) Fuel load (Startup Test Program)	License Condition
20	Suppression Pool Cleanliness	10 CFR 50.46	6.2.1.7	Prior to Startup Program	License Condition

* Implementation will occur prior to the milestone indicated.

Table 13.4S-1 Operational Programs Required by NRC Regulation and Program Implementation (Continued)

Item	Program Title	Program Source (Required By)	FSAR (SRP) Section	Implementation	
				Milestone*	Requirement
21	SNM Material and Accounting Program	10 CFR 74, Subpart B (74.11-19, excl. 74.17)	13.5.3.4.1	Prior to receipt of special nuclear material	License Condition

* Implementation will occur prior to the milestone indicated.

13.5 Plant Procedures

The information in this section of the reference ABWR DCD, including all subsections, as modified by the STP Nuclear Operating Company Application to Amend the Design Certification rule for the U.S. Advanced Boiling Water Reactor (ABWR), "ABWR STP Aircraft Impact Assessment (AIA) Amendment Revision 3," dated September 23, 2010 is incorporated by reference with the following supplements that address COL License Information Items 13.3 through 13.6. The procedures that are identified in or required by the COL License Information Items in ABWR DCD, Tier 2, Table 1.9-1, will be incorporated into the plant procedures according to the following supplements, as applicable.

13.5.3.1 Plant Operating Procedures Development Plan

The following standard supplement addresses COL License Information Item 13.3.

(1) Plant operating procedures will be developed based on inputs and requirements identified in plant design documents, Human Factors Engineering (HFE) Task Analysis, HFE Functional Requirement Analysis and Functional Allocation, Probability Risk Assessment, as well as existing operating ABWR plant experience.

(2) The scope encompassed by the procedure development plan includes those Plant Operating Procedures addressed in Section 13.5.3.4.2 through 13.5.3.4.8. These procedures direct operator actions during normal, abnormal, and emergency operations, periods when plant systems and equipment are undergoing test, maintenance, and inspection.

(3) The methods and criteria for the development, verification, and validation will be in accordance with TMI Items I.C.1, and I.C.9. The verification and validation process is described in the Human Factors Engineering Program Plan.

(4) Implementation, maintenance and revision of procedures will be in accordance with the established site administrative procedures.

(5) Plant operating procedures include the following sub-classifications:

- General Plant Procedures (GPP)
- System Operating Procedures (SOP)
- Abnormal Operating Procedures (AOP)
- Alarm Response Procedures (ARP)
- Surveillance Test Procedures (STP)

(6) A procedure writer's guide will be developed and implemented that defines the process for developing GPP, SOP, AOP, ARP, and STP. For multi-unit sites with existing operating units, the Writers Guide in use for the operating units will be used to ensure consistent site operation. The guide will contain sufficiently objective criteria so that procedures developed are complete, accurate, consistent in organization, style, and content, easy to understand. It will provide instructions for procedure content and format, including the writing of action steps and the specification of acceptable acronym lists and acceptable terms to be used.

(7) The content of the GPPs, SOPs, and STPs will incorporate the following elements as applicable.

- Title
- Discussion
- References
- Prerequisites
- Precautions (including warnings, cautions, and notes)
- Limitations and actions
- Required operator actions
- Acceptance criteria (Surveillance Test Procedures only)
- References
- Attachments

(8) The format for the Abnormal Operating Procedures (AOPs) and procedures for other significant events will include the following, as appropriate:

- Symptoms
- Automatic actions
- Immediate operator actions
- Subsequent operator actions

(9) The format for the Alarm Response Procedures will include the following, as appropriate:

- Alarm message description
- Automatic actions

- Operator actions
- Probable causes

13.5.3.2 Emergency Operating Procedures

The following standard supplement addresses COL License Information Item 13.4.

(1) STP will utilize the approved Emergency Procedure Guidelines (EPG) as found in Chapter 18 of the Design Control Documents Tier 2, based on the BWR Owners Group EPG Revision 4.

(2) A plant specific Emergency Operating Procedure (EOP) writer's guide will be developed and implemented. The writer's guide will contain objective criteria that will require that the emergency procedures are consistent in organization, style, content, and usage of terms. Guidance for the development of EOP's will come from NUREG-0899, NUREG-1358 (including Supplement 1) and NUREG/CR-5228.

(3) EOPs will be in a symptom-based format with clearly specified entry conditions that provide the operator guidance in response to upset plant conditions in which one or more key variables are out of limits, regardless the cause.

(4) STP Plant Specific Technical Guidelines (PSTGs) will be generated based on analysis of transients and accidents that are specific to a site plant design and operating philosophy. The PSTGs will be derived from the ABWR EPGs.

(5) As part of the emergency procedure development, a document will be generated identifying any significant deviations from the approved EPGs (including identification of additional equipment beyond that identified in the approved guidelines), along with all necessary engineering evaluations or analyses to support the adequacy of each deviation. As part of this evaluation a determination whether these deviations impact the analysis of controls and indications identified in Appendix 18 F of the Design Control Document Tier-2 will be performed.

(6) Site-specific calculations will be performed to support generation of the curves and limits utilized in the EOPs.

(7) EOPs will support the Plant Operations Training Program. They are verified and validated in the HFE program and evaluated in the STP Human Factors Engineering Program. The EOPs will also be completed in time to support the Plant Operations Training Program. The Procedure Generation Package (PGP) for EOPs will be submitted to the NRC 3 months prior to formal operator training on EOPs.

(8) Implementation, maintenance, and revision of procedures will be in accordance with the established site administrative procedures.

13.5.3.3 Implementation of the Plan

The following standard supplement addresses COL License Information Item 13.5.

13.5.3.3.1 Administrative Procedures

(1) Administrative procedures are those procedures that (a) provide the administrative controls with respect to performing activities or evolutions, and (b) define and provide controls for operational activities of the plant staff. Examples of procedures that fall in this category are identified in section 13.5.3.4.1.

(2) Regulatory Guide (RG) 1.33, Rev. 2, will be used as a guide for the preparation of plant administrative policies and procedures. The requirements of the STP FSAR 17.2 (Quality Assurance During the Operations Phase) will be met for those systems and components listed in section 13.5.3.4.1 to which 10 CFR 50 Appendix B requirements apply.

(3) Administrative procedures will be developed based upon the experiences of other STP operating plants and will be consistent with STP guidelines.

(4) The responsibility for preparing, maintaining and approving plant procedures will be assigned by an STP administrative procedure. Procedures will be assigned to an STP organization and manager based on content, intended user, and importance to plant operation. Safety-related procedures will be reviewed by the Plant Operations Review Committee (PORC) and approved by the Plant Manager.

13.5.3.3.2 Maintenance and Other Procedures

(1) Procedures under this category address specific site-wide programs as they relate to maintenance and general operations. Procedures in this category are normally developed consistent with STP guidelines and based on the experiences of other operating plants.

(2) A list of typical procedures included in the scope of the Maintenance and Other Operating Procedures is provided in Section 13.5.3.4.2 and 13.5.3.4.3. It is not necessary for all the procedures to contain titles exactly as listed, but all systems, evolutions, and events listed that are applicable to the ABWR certified design will be covered.

(3) The existing procedures in use at STP 1 & 2 will be used to ensure consistent site operation. A review will be performed to ensure that the existing administrative procedures are consistent with the STP 3 & 4 FSAR. Should any changes be necessary to those procedures as a result of ABWR unique features, the procedures will be updated using the existing procedure change process.

(4) STP procedures will be prepared following the STP guidelines listed above and be issued six months prior to the commencement of the Preoperational Test Program.

13.5.3.4 Procedures Included In Scope Of Plan

The following standard supplement addresses COL License Information Item 13.6.

The following is a list of typical procedures that will be included in the scope of the Plant Procedures Development Plan. It is not necessary for all the procedures to contain titles exactly as listed, but all systems, evolutions, and events listed that are applicable to the ABWR nuclear power station will be covered.

13.5.3.4.1 Administrative Procedures

Administrative Procedures are those procedures that (1) provide the administrative controls with respect to performing activities or evolutions and (2) define and provide controls for operational activities of the plant staff. These include:

(1) Control (i.e. control of activies or evolutions)

- Procedure review and approval
- Equipment control procedures
- Control of maintenance and modifications
- Fire protection procedures
- Crane operation procedures
- Temporary changes to procedures
- Temporary procedures
- Special orders of a transient or self-cancelling character
- Special Nuclear Material (SNM) Material Control and Accounting Program

(2) Specific Procedures (i.e. operational activities for plant staff)

- Standing orders to shift personnel including the authority and responsibility of the shift supervisor, licensed senior reactor operator in the control room, control room operator, and shift technical advisor
- A process for implementing the safety/security interface requirements of 10 CFR 73.58.

- A process is in effect between the time of issuance of the combined license and prior to Security Program implementation during the design and construction period to implement the safety/security interface requirements of 10 CFR 73.58 and the guidance of RG 5.74. This process is used to manage safety/security interface while the security procedures and emergency plan implementing procedures are being developed and implemented.
- Assignment of shift personnel to duty stations and definition of "surveillance area"
- Shift relief and turnover
- Fitness for duty
- Control room access
- Limitations on work hours
- Feedback of design construction and applicable important industry and operation experience
- Shift Supervisor administrative duties
- Verification of correct performance of operating activities

13.5.3.4.2 Maintenance and Other Operating Procedures

Procedures will be provided to guide operation during maintenance and modification procedures that require operator actions to be taken in the main control room or remote shutdown panel including the following:

(1) Exercising of equipment that is normally idle but that must operate when required

(2) Removal of reactor head

(3) Plant radiation protection procedures

(4) Emergency preparedness procedures

(5) Instrument calibration and test procedures

(6) Chemical-radiochemical control procedures

(7) Radioactive waste management procedures

(8) Maintenance and modification procedures

(9) Material control procedures

(10) Precautions for performing testing, maintenance and inspections of Main Control Room and Remote Shutdown control panels

(11) Activation and implementation of the facility emergency plan

13.5.3.4.3 Radiation Control Procedures

The following procedures will be provided as discussed in Section A 7(d) of ANSI/ANS-3.2

(1) Mechanical vacuum pump operation

(2) Air ejector operation

(3) Packing steam exhauster operation

(4) Sampling

(5) Air ejection, ventilation, and stack monitor

(6) Area radiation monitoring system operation

(7) Process radiation monitoring system operation

(8) Meteorological monitoring

(9) Discharge of effluents

(10) Dose calculations

Equipment-specific requirements (items 1 through 7) will be addressed in the System Operating Procedures and elements that must be incorporated for the entire site (items 8 through 10) will be addressed in Administrative or Maintenance Procedures.

13.5.3.4.4 General Plant Procedures

Integrated operating procedures provide instruction for the integrated operation of the plant. As discussed in Section A5 of ANSI/ANS-3.2, typical integrated operating procedures will include evolutions listed below:

(1) Cold Shutdown to Hot Standby

(2) Hot Shutdown to Startup

(3) Recovery from Reactor Trip

(4) Operation at Hot Standby

(5) Turbine Startup and Synchronization of Generator

(6) Changing Load and Load Following

(7) Power Operation and Process Monitoring

(8) Power Operation with Less than Full Reactor Coolant Flow

(9) Plant Shutdown to Hot Standby

(10) Hot Standby to Cold Shutdown

(11) Preparation for Refueling and Refueling Equipment Operation

(12) Refueling and Core Alternations

13.5.3.4.5 System Operating Procedures

Instructions for energizing, filling, venting, draining, starting up, shutting down, changing modes of operation, returning to service following testing (if not contained in the applicable testing procedure), and other instructions appropriate for operation of systems and prevention of water hammer will be delineated in System Operating Procedures. As discussed in Section A3 of ANSI/ANS-3.2, typical System Operating Procedures are listed below:

(1) Nuclear Steam Supply System (Vessel and Recirculating System)

(2) Control Rod Drive System

(3) Reactor Water Cleanup System

(4) Standby Liquid Control System

(5) Residual Heat Removal System

(6) High Pressure Core Flooder System

(7) Reactor Core Isolation Cooling

(8) Automatic Depressurization System

(9) Reactor Building Cooling Water System

(10) Containment

- Maintaining Integrity
- Containment Ventilation System
- Inerting and Deinerting

(11) Fuel Pool Cooling and Cleanup System

(12) Main Steam System

(13) Turbine/Generator System

(14) Condensate System

(15) Feedwater System

(16) Makeup Water System

(17) Reactor Building Service Water System

(18) Turbine Building Service Water

(19) Reactor Building HVAC System

(20) Control Building HVAC System

(21) Radwaste HVAC System

(22) Standby Gas Treatment System

(23) Instrument Air System

(24) Electrical System

- Offsite: Circuits between offsite transmission network and the onsite Class 1E distribution system
- Onsite: Emergency Power Sources (e.g., Diesel generator, batteries)

  –- AC System

  –- DC System

(25) Neutron Monitoring System

- Startup Range Neutron Monitoring System
- Power Range Neutron Monitoring System
- Traversing In-core Probe System

(26) Reactor Protection System

(27) Rod Worth Minimizer

13.5.3.4.6 Alarm Response Procedures

Procedures will be prepared for off-normal or alarm conditions that require operator action in the Main Control Room. An individual procedure will be written for each annunciator window containing instructions for each alarm associated with that window which is important to safety or the operation of the power plant. These instructions will

normally contain (1) the meaning of the alarm, (2) the source of the signal, (3) the immediate action that is to occur automatically, (4) the immediate operator action, and (5) the long-range actions. If more than one alarm applies to a given procedure, repetition of the procedure may not be required if the applicable annunciators are listed at the beginning of the procedure.

Included in this procedure group will be specific guidance specifying operator actions in response to prolonged low level reactor coolant system leakage below Technical Specifications limits.

13.5.3.4.7 Abnormal Operating Procedures

As discussed in Section A 10 of ANSI/ANS-3.2, procedures will be provided to guide operation for significant events. Examples of such events are listed below.

(1) Loss of Coolant (inside and outside primary containment, response to large and small breaks, including leak-rate determination)

(2) Loss of Instrument Air

(3) Loss of Electrical Power (and/or degraded power sources and Extended Loss of AC Power)

(4) Loss of Core Coolant Flow

(5) Loss of Condenser Vacuum

(6) Loss of Containment Integrity

(7) Loss of Service Water

(8) Loss of Shutdown Cooling

(9) Loss of Component Cooling System or Cooling to Individual Components

(10) Loss of Feedwater or Feedwater System Failure

(11) Loss of Protective System Channel

(12) Miss-positioned Control Rod or Rods or Rod Drops

(13) Inability to Drive Control Rods

(14) Conditions Requiring Use of Standby Liquid Control System

(15) Fuel Cladding Failure or High Activity in Reactor Coolant or Offgas

(16) Fire in Control Room or Forced Evacuation of Control Room

(17) Turbine and Generator Trips

(18) Malfunction of Automatic Reactivity Control System

(19) Malfunction of Pressure Control System

(20) Reactor Trip

(21) Plant fires

(22) Acts of Nature (e.g., Tornado, flood, dam failure, earthquake)

(23) Irradiated Fuel Damage While Refueling

(24) Abnormal Releases of Radioactivity

(25) Intrusion of Demineralizer Resin into Primary System

(26) Hydrogen Explosions

(27) Containment Isolation (including reopening of individual isolation valve following reset of safety injection or containment isolation valves)

(28) Loss of Annunciators

(29) Safe shutdown and cool-down under degraded core conditions (may be included in EOP actions)

(30) Other expected transients that may be applicable

13.5.3.4.8 Calibration, Inspection, and Test Procedures

Procedures will be prepared for each surveillance test, inspection, or calibration required by Technical Specifications. As discussed in Section A8 of ANSI/ANS-3.2, examples of topics covered by surveillance test procedures are listed below:

(1) Containment Leak Rate and Penetration Leak Rate Tests*

(2) Containment Isolation Tests

(3) Containment Vacuum Breaker Tests

(4) Containment Spray System Tests

(5) Standby Gas Treatment System Tests (including filter tests)

(6) Emergency Service Water System Functional Tests

(7) Main Steam Isolation Valve Tests

(8) Fire Protection System Functional Tests

(9) Containment Monitoring System Tests

(10) Emergency Core Cooling System Tests

(11) Control Rod Operability and Scram Time Tests

(12) Reactor Protection System Tests and Calibrations

(13) Rod Block Tests and Calibrations

(14) Refueling System Circuit Test

(15) Standby Liquid System Tests

(16) Core Thermal Limit Checks and Core Flux Monitor Calibrations

(17) Emergency Power Tests

(18) Reactor Core Isolation Cooling Tests

(19) NSSS Pressurization and Leak Detection

(20) Inspection of Reactor Coolant System Pressure Boundary

(21) Inspection of Pipe Hanger Settings

(22) Control Rod Drive System Functional Tests

(23) Core Physics Surveillance, Including Heat Balance

(24) Leak Detection System Tests*

(25) Area, Portable, and Air borne Radiation Monitor Calibrations

(26) Process Radiation Monitor Calibrations

(27) Safety Relief Valve Tests

(28) Turbine Overspeed Trip Tests

(29) Water Storage Tanks Level Instrumentation Calibrations

(30) Reactor Building In-leakage Tests

(31) Nitrogen Inerting System Tests

* Included in this procedure group will be guidance regarding conversion of various leakage measurements into a common leakage equivalent.

13.5.3.4.9 Emergency Operating Procedures

Procedures that are symptom-oriented will be prepared to provide the operator guidance for maintaining the reactor in a safe condition with any or all of the principal process variables for the reactor or containment initially outside of limits, regardless of cause. Such procedures do not require the operator to diagnose the cause of the upset. A list of events that procedures will cover are provided below:

(1) RPV Control

(2) Primary Containment Control

(3) Secondary Containment Control

(4) Radioactivity Release Control

(5) Level Restoration (Alternate Level Control)

(6) Emergency (RPV) Pressurization

(7) Steam Cooling

(8) RPV Flooding

(9) Level/Power Control

(10) (Primary) Containment Flooding

13.5.3.5.1 Supporting Documents

(1) ABWR Tier 2 Rev. 04, Appendix 18A, Emergency Procedure Guidelines

13.5.3.5.2 Regulation and Regulatory Requirements

(1) NUREG-0737, Supplement No. 1, Clarification of TMI Action Plan Requirements, 1982

(2) NUREG-0899, Guidelines for the Preparation of Emergency Operating Procedures, 1982

(3) NUREG-1358, Lessons Learned From the Special Inspection Program for Emergency Operating Procedures, 1989

(4) NUREG-1358, Lessons Learned From the Special Inspection Program for Emergency Operating Procedures, Supplement 1,1992

(5) NUREG/CR-5228, Techniques for Preparing Flowchart Format Emergency Operating Procedures, Volumes 1 and 2,1989

13.5.3.5.3 Additional References

In additon to the sources cited previously, accepted methods and criteria for development of plant procedures are embodied in the following documents.

13.5-1 NUREG-0899, "Guidelines for the Preparation of Emergency Operating Procedures", USNRC, 1982

13.5-2 NUREG-1358, "Lessons Learned From the Special Inspection Program for Emergency Operating Procedures", USNRC, 1989

13.5-3 NUREG-1358, Supplement 1, "Lessons Learned From the Special Inspection Program for Emergency Operating Procedures", USNRC, 1992

13.5-4 NUREG/CR-5228, "Techniques for Preparing Flowchart Format Emergency Operating Procedures" (Vols. 1 & 2), USNRC, 1989

13.6 Physical Security

The information in this section of the reference ABWR DCD and the referenced SSAR, including all subsections, is incorporated by reference with the following supplement and departure. Design changes and site specific information were reviewed against the information in SSAR Subsections 13.6.3.1 through 13.6.3.12, Amendment 33. No conclusions in SSAR Chapter 13.6 were affected.

STD DEP T1 2.14-1

Subsection 13.6.3.3 "Vital Areas" includes the Hydrogen Recombiner and associated monitoring equipment, which is removed from the design. Consequently this equipment is deleted from Subsection 13.6.3.3 vital equipment lists.

13.6.3 COL License Information

The following site-specific supplemental information addresses COL License Information Item 13.7.

The comprehensive site Security Plan consists of the Physical Security Plan, the Training and Qualification Plan, the Cyber Security Program, and the Safeguards Contingency Plan. The Security Plan is submitted as a separate licensing document in order to fulfill the requirements of 10 CFR 50.34. The Security Plan meets the requirements contained in 10 CFR 26 and 10 CFR 73 and will be maintained in accordance with the requirements of 10 CFR 50.54. The Security Plan is classified as Security Safeguards Information and is withheld from public disclosure in accordance with 10 CFR 73.21.

The Cyber Security Program is implemented and maintained to meet the requirements contained in 10 CFR 73.54 during the operating phase of the nuclear units. This program will be implemented on site prior to Unit 3 Fuel Receipt (Protected Area). The Cyber Security Plan is classified as Security Safeguards Information and is considered part of the Security Plan and is withheld from public disclosure in accordance with 10 CFR 73.21.

The Interdiction Capability Evaluation addresses COL License Information Item 13.6.3.3-3 and is provided as a separate Safeguards supplement licensing document. The final design of the Protective Strategy will be provided in the Units' 3 & 4 Safeguards Contingency Plan procedures.

A comprehensive site Security Plan for STP is provided in COLA Part 8.

Physical and Cyber Security Programs are implemented and maintained to meet the requirements contained in 10 CFR Part 73.55 and 10 CFR 73.54 during the operating phase of the nuclear units. Unit 3 Fuel Receipt onsite (Protected Area) is executed only in the operational protected area where the Physical and Cyber Programs have been fully implemented.

13.6.4 Transportation Physical Security Plan

In accordance with CFR 73.67(g) 1-3, as clarified by RIS 2005-22, written agreements will be developed and implemented with the supplying fuel manufacturer to transport new fuel assemblies (including returning shipments) between the fuel manufacturing facility and the STP 3&4 site under the fuel manufacturer's Transportation Physical Security Plan. Under these agreements, the transfer of responsibility for transportation security of new fuel assemblies, including damaged new fuel assemblies, occurs at the STP 3&4 site when STPNOC accepts delivery of new fuel assemblies from the carrier (manufacturer) or the carrier accepts new fuel from STPNOC. Under these agreements, the fuel manufacturer will be responsible for the in transit physical protection of the new fuel assemblies. The manufacturer and STPNOC will maintain responsibility for the appropriate administrative and Material Control and Accounting (MC&A) requirements when acting as a shipper or receiver.

13.7 Fitness For Duty

The Fitness for Duty (FFD) Program is implemented and maintained in two phases; the construction phase program and the operating phase program. The construction and operations phase programs are implemented as identified in Table 13.4S-1.

The construction phase program is consistent with NEI 06-06 (Reference 13.7-1). NEI 06-06 applies to persons constructing or directing the construction of safety and security-related structures, systems, or components performed onsite where the new reactor will be installed and operated. Management and oversight personnel, as further described in NEI 06-06, and security personnel prior to the receipt of special nuclear material in the form of fuel assemblies (with certain exceptions) will be subject to the operations FFD program that meets the requirements of 10 CFR Part 26, Subparts A through H, N, and O. At the establishment of a protected area, all persons who are granted unescorted access will meet the requirements of an operations FFD program. Prior to issuance of a Combined License, the construction FFD program at a new reactor construction site for those subject to Subpart K will be reviewed and revised as necessary should substantial revisions occur to either NEI 06-06 or the requirements of 10 CFR Part 26.

The following site-specific information is provided:

- The construction site is defined in the Physical Security Plan, Appendix E and is under the control of Constructor. The 10 CFR Part 26 requirements are implemented for the construction site area based on the descriptions provided in Table 13.4S-1.
- Construction workers & first line supervisors (Constructor employees and subcontractors) are covered by the STPNOC approved Constructor FFD Program (elements Subpart K).
- STPNOC employees and STPNOC subcontractor's construction management and oversight personnel are covered by the STPNOC Operations FFD Program and Constructor's employees and Constructor's subcontractors construction management and oversight personnel are covered by the STPNOC approved Constructor FFD Program (elements Subpart A – H, N and O).
- STPNOC security personnel are covered by the STPNOC Operations FFD Program and Constructor's security personnel are covered by the STPNOC approved Constructor FFD Program (elements Subpart A – H, N and O). This coverage is applicable from the start of construction activities to the earlier of (1) the receipt of Special Nuclear Material in the form of fuel assemblies, (2) the establishment of a protected area, or (3) the 10 CFR 52.103(g) finding.
- STPNOC FFD Program personnel are covered by the STPNOC Operations FFD Program and Constructor's FFD Program personnel are covered by the STPNOC approved Constructor FFD Program (elements Subpart A, B, D – H, N, O, and C per licensee's discretion).

- STPNOC security personnel protecting fuel assemblies, or the established protected area, or the facility following the 10 CFR 52.103(g) finding are covered by the STPNOC Operations FFD Program (elements Subpart A – I, N and O).

The operations phase program is consistent with 10 CFR Part 26. (Elements Subpart A – I, N, and O, except for individuals listed in §26.4(b), who are not subject to §§ 26.205 – 209, as described in Section 13.7.2 below.

13.7.1 References

13.7-1 Nuclear Energy Institute “Fitness for Duty Program Guidance for New Nuclear Power Plant Construction Sites,” NEI 06-06, Revision 5, August 2009.

13.7.2 Program Description

The STP FFD Program is a comprehensive program consisting of drug and alcohol screening, a Behavioral Observation Program, and an Employee Assistance Program. The purpose of the FFD Program is to meet the STPNOC commitment to provide a drug-free, healthful, and safe workplace. To promote this goal, employees are required to report to work in an appropriate mental and physical condition to perform their jobs in a satisfactory manner. This program applies to all covered individuals, which includes STPNOC employees, co-owner employees, STPNOC applicants, contractors, vendors, or supplier employees performing work at STP. STP visitors or short-term consultants/contractors exhibiting behavior suggesting a lack of "fitness for duty" may also be subject to for cause drug and alcohol screening under this policy.

14.0S Verification Programs

Section 14.1S identifies specific information to be addressed for the Initial Test Program.

Section 14.2 describes the initial test program, including pre-operational testing, initial fuel loading and criticality, low-power testing, and power-ascension testing. The test abstracts provided in Section 14.2 are designed to demonstrate the capability of structures, systems, components (SSCs) and design features to meet performance requirements and design criteria for both the nuclear portion of the facility as well as the balance-of-plant. The prerequisite requirements contained in the test abstracts sequence the testing such that the safety of the plant will not depend on untested SSCs. This section specifies the scope of the initial test program and provides the general plan for accomplishing the program with adequate numbers of qualified personnel and with adequate administrative controls. It also describes how, to the extent practicable, the program will be used to train and familiarize the plant's operating and technical staff in the operation of the facility and how, to the extent practicable, the adequacy of plant operating and emergency procedures will be verified during the testing sequence.

Section 14.2S provides supplemental information covering the same topics as those listed in Section 14.2 for those structures, systems and components that were not originally listed in the DCD.

In addition to the initial test program, Section 14.3 describes the selection criteria and methodology for the inspections, tests, analyses, and acceptance criteria (ITAAC) that will be used to demonstrate that the facility has been constructed and will operate in conformance with the combined license, the Atomic Energy Act, and NRC regulations. Section 14.3S specifies the selection criteria for ITAAC for site-specific systems, emergency planning, and security.

14.0 Initial Test Program

14.1 Specific Information to be Included in Preliminary Safety Analysis Reports

The information in this section of the reference ABWR DCD is incorporated by reference with no departures or supplements.

14.1S Specific Information to be Addressed For the Initial Plant Test Program

The initial test program has been designed to address the relevant requirements of the following regulations:

- 10 CFR 30.53, as it relates to testing radiation detection equipment and monitoring instruments
- 10 CFR 50.34(b)(6)(iii), as it relates to providing information associated with preoperational testing and initial operations
- 10 CFR Part 50, Appendix B, Section XI, as it relates to test programs to demonstrate that structures, systems, and components will perform satisfactorily
- 10 CFR Part 50, Appendix J, Section III.A.4, as it relates to preoperational leakage rate testing of the reactor primary containment
- 10 CFR 52.79, as it relates to preoperational testing and initial operations

NRC Regulatory Guidelines used in the development of the initial test program are listed in Section 14.2.7 of the reference ABWR DCD.

14.2 Specific Information to be Included in Final Safety Analysis Reports

The information in this section of the reference ABWR DCD, including all subsections, as modified by the STP Nuclear Operating Company Application to Amend the Design Certification rule for the U.S. Advanced Boiling Water Reactor (ABWR), "ABWR STP Aircraft Impact Assessment (AIA) Amendment Revision 3," dated September 23, 2010 tables, and figures, is incorporated by reference with the following departures and supplements.

STD DEP T1 2.4-3

STD DEP T1 2.4-4

STD DEP T1 2.14-1

STD DEP T1 3.4-1 (Table 14.2-1)

STD DEP 4.6-1

STD DEP 8.3-1

STD DEP 9.1-1

STD DEP 9.5-1

STP DEP 10.2-1

STP DEP 10.2-3

STD DEP 11.2-1

STD DEP 11.4-1

STD DEP 14.2-1 (Table 14.2-1)

STD DEP Admin

STD DEP Vendor, Vendor Replacement

14.2.2.1 Normal Plant Staff

STD DEP Admin

STD DEP Vendor, Vendor Replacement

Normal plant staff responsibilities, authorities, and qualifications are ~~outside the scope of the ABWR Standard Plant and will be provided by the COL applicant, as~~ discussed in ~~Chapter~~ Section *13*.1*. During the construction cycle and the various testing phases, additional staff is supplied by the plant owner/operator, ~~GE~~* nuclear steam supply system (NSSS) vendor*, and others.*

The following supplement augments that provided by this subsection.

The plant staff is involved in the initial plant test program in several capacities; including the review of preoperational and startup test procedures and results, performing as startup engineers and other direct participation in test activities. Plant staff will assume increasing responsibility for performing preventative and selected corrective maintenance activities on plant components when released from construction to the Startup Organization. Plant staff will be assigned to assist startup test engineers in performing tests and in operating permanent plant equipment which has been released from construction to the Startup Organization. Plant Operations directs the fuel loading and is responsible for the operation of the plant during initial startup testing. The duties and responsibilities of key plant staff are described in the STP Units 3 & 4 Startup Administrative Manual.

14.2.2.2 Startup Group

STD DEP Vendor, Vendor Replacement

It is likely that the startup group will also include an augmented staff of individuals from other concerned parties such as the NSSS vendor ~~(GE)~~, the architect-engineer, and the plant constructor. The normal plant staff will be included in as many aspects of the test programs as is practicable considering their normal duties in the operation and maintenance of the plant.

14.2.2.3 ~~General Electric Company~~ Nuclear Steam Supply System (NSSS) Vendor

The ~~General Electric Company (GE)~~ NSSS vendor *is the supplier of the boiling water reactor (BWR) nuclear steam supply system (NSSS) and is responsible for generic and specific BWR designs. During the construction and testing phases of the plant cycle, ~~GE~~* NSSS vendor *personnel are onsite to offer consultation and technical direction with regard to ~~GE~~* NSSS vendor*-supplied systems and equipment. The ~~GE~~* NSSS vendor *resident site manager is responsible for all ~~GE~~* NSSS vendor*-supplied equipment disposition and, as the senior NSSS vendor representative onsite, is the official site spokesman for ~~GE~~* the NSSS vendor*. He coordinates with the plant owner's normal and augmented plant staff for the performance of his duties, which include:*

(1) Reviewing and approving all test procedures, changes to test procedures, and test results for equipment and systems within the ~~GE~~ NSSS vendor *scope of supply*

(2) Providing technical direction to the station staff

(3) Managing the activities of the ~~GE~~ NSSS vendor *site personnel in providing technical direction to shift personnel in the testing and operation of ~~GE~~* NSSS vendor*-supplied systems*

(4) Liaison between the site and the ~~GE San Jose~~ NSSS vendor *home office to provide rapid and effective solutions for problems which cannot be solved onsite*

(5) Participating as a member of the Startup Coordinating Group (SCG) [Note: The official designation of this group may differ for the plant owner/operator referencing the ABWR Standard Plant design and SCG is used throughout this dicussion for illustrative purposes only.]

14.2.2.5 Interrelationships and Interfaces

Effective coordination between the various site organizations involved in the test program is achieved through the SCG, which is composed of representatives of the plant owner/operator, ~~GE~~ NSSS vendor*, and others. The duties of the SCG are to review and approve project testing schedules and to effect timely changes to construction or testing in order to facilitate execution of the preoperational and initial startup test programs.*

14.2.3 Test Procedures

Specifically, ~~GE~~ the NSSS vendor *will provide the COL applicant with scoping documents (i.e., preoperational and startup test specifications) containing testing objectives and acceptance criteria applicable to its scope of design responsibility.*

14.2.5 Review, Evaluation, and Approval of Test Results

Individual test results are evaluated and reviewed by cognizant members of the startup group. Test exceptions or acceptance criteria violations are communicated to the affected and responsible organizations who will help resolve the issues by suggesting corrective actions, design modifications, and retests. ~~GE~~ The NSSS vendor *and others outside the plant staff organization, as appropriate, will have the opportunity to review the results for conformance to predictions and expectations.*

14.2.7 Conformance of Test Program with Regulatory Guides

STD DEP 9.5-1

The NRC Regulatory Guides listed below were used in the development of the initial test program and the applicable tests comply with these guides except as noted. The applicable revisions of the regulatory guides listed below can be found in Table 1.8-20.

(10) ~~Regulatory Guide 1.108 – "Periodic Testing of Diesel Generators Used as Onsite Electric Power Systems at Nuclear Power Plants."~~ Regulatory Guide 1.9—"Selection, Design, Qualification, and Testing of Emergency Diesel Generator Units Used As Class 1E Onsite Electric Power Systems at Nuclear Power Plants."

14.2.8 Utilization of Reactor Operating and Testing Experience in the Development of Test Program

STD DEP Vendor, Vendor Replacement

~~Since every reactor/plant in a GE BWR product line is an evolutionary development of the previous plant in the product line (and each product line is an evolutionary development from the previous product line), it is evident that the~~ ABWR plants have

the benefits of experience acquired with the successful and safe startup of ~~more than 30~~ previous BWR/1–6 and ABWR *plants. The operational experience and knowledge gained from these plants and other reactor types has been factored into the design and test specifications of ~~GE~~* NSSS vendor*-supplied systems and equipment that will be demonstrated during the preoperational and startup test programs.*

14.2.11 Test Program Schedule

The following supplement addresses the COL License Information Item contained within the text of this subsection.

The schedule, relative to the initial fuel load date, for conducting each major phase of the initial test program, including the timetable for generation, review and approval of procedures, testing and analysis of results will be provided to the NRC 6 months prior to commencement of the initial test program. (COM 14.2-1)

14.2.12 Individual Test Descriptions

14.2.12.1 Preoperational Test Procedures

STD DEP Vendor, Vendor Replacement

Specific testing to be performed and the applicable acceptance criteria for each preoperational test will be documented in detailed test procedures to be made available to the NRC approximately 60 days prior to their intended use. Preoperational testing will be in accordance with the detailed system specifications and associated equipment specifications for equipment in those systems (provided as part of scoping documents to be supplied by ~~GE~~ the NSSS vendor *and others as described in Subsection 14.2.3).*

14.2.12.1.3 Recirculation Flow Control System Preoperational Test

STD DEP T1 3.4-1

(2) Prerequisites

The construction tests have been successfully completed, and the SCG has reviewed the test procedure and approved the initiation of testing. The following systems and functions *shall be available, as needed, to support the specified testing and the corresponding system configurations: Reactor Recirculation System, Feedwater Control System, Steam Bypass and Pressure Control System, Electric Power Distribution System/instrumentation and control power supply, ~~Process Computer System~~* Plant Computer Functions*, Reactor Water Cleanup System, CRD System, RCIS, Neutron Monitoring System, Automatic Power Regulator System, Condensate and Feedwater System and Reactor Protection System.*

14.2.12.1.4 Feedwater Control System Preoperational Test

(2) Prerequisites

Appropriate instrumentation and control power supply, Turbine Control System, Reactor Recirculation Flow Control System, Condensate and Feedwater System, ~~Process Computer System~~ Plant Computer Functions*, Reactor Water Cleanup System, RCIC System,* and *Nuclear Boiler System ~~and Multiplexing System~~ shall be available and operational to support the performance of this test.*

14.2.12.1.8 Residual Heat Removal System Preoperational Test

STD DEP T1 2.4-4

(2) Prerequisites

Reactor Building Cooling Water System, Instrument Air System, Fuel Pool Cooling and Cleanup System, Leak Detection System, RCIC System, Suppression Pool Water System, Nuclear Boiler System, ~~Process Computer System,~~ Electric Power Distribution System, ~~Process Computer System~~ Plant Computer Functions *and other required interfacing systems shall be available, as needed, to support the specified testing and the appropriate system configurations. Additionally, RHR pump suctionline shall be installed with a ~~50% plugged~~ temporary strainer throughout the test.*

14.2.12.1.9 Reactor Core Isolation Cooling System Preoperational Test

STD DEP T1 2.4-3

(3) General Test Methods and Acceptance Criteria

The RCIC turbine shall be tested in accordance with the manufacturer's recommendations.~~ Usually this involves the turbine first being tested while disconnected from and then while coupled to the pump.~~

(f) Satisfactory performance of the RCIC System during the following modes of operation. This test shall be performed using temporary steam supply, equipment, piping and instrumentation as necessary for the test:

(iv) Turbine quick start in response to the simulated automatic initiation signal with suction from the condensate storage pool and discharge via test return line to the ~~condensate storage~~ suppression *pool. This test shall demonstrate proper system flow rate and time to rated flow and no malfunction in the system.*

~~(k) Proper operation of the barometric condenser condensate pump and vacuum pump.~~

14.2.12.1.10 High Pressure Core Flooder System Preoperational Test

STD DEP T1 2.4-4

(2) Prerequisites

The construction tests have been successfully completed, and the SCG has reviewed the test procedure and approved the initiation of testing. A temporary strainer shall be installed ~~with 50% plugged~~ in the pump suction throughout this test.

14.2.12.1.11 Safety System Logic and Control Preoperational Test

STD DEP T1 3.4-1

(2) Prerequisites

The ~~process computer~~ Plant Computer Functions *shall be available for displaying and logging, as required, the SSLC supplied parameters and fault identification and bypass status signals. Additionally, ~~a dedicated~~ diagnostic ~~instrument~~ surveillance test ~~controller (STC)~~* equipment *shall be available and used as an aid in performing SSLC functional logic testing, including trip, initiation, and interlock logic.*

(3) General Test Methods and Acceptance Criteria

The SSLC integrates the automatic decision making and trip logic functions associated with the safety action of several of the plants' safety-related systems. Such systems include the RPS, HPCF, RHR, RCIC, LDIS, and ADS. The SSLC is not so much a system itself, but is instead an assembly of the above mentioned safety-related systems signal processors designed and grouped for optimum reliability, availability and operability. The SSLC, therefore, shall be adequately tested during the preoperational phase testing of the associated systems, including the integrated LOPP/LOCA test. Provided the construction testing and the associated system preoperational testing has been successfully completed, as it related to proper operation of the SSLC, no specific additional testing should be necessary.

Operability of the SSLC functional logic from sensor input to driven equipment actuation shall be demonstrated during a series of overlap testing. This test shall demonstrate that the SSLC operates correctly as specified in Subsection 7.1.2.1.6 and applicable SSLC design and testing specification through the following testing:

(a) Reactor Protection System (RPS)/MSIV Tests

(i) Setpoint validation ~~(RMU to DTM)~~, using input simulation and automatic self-test feature

(ii) Trip logic test of ~~TLU~~ TLF*, using input simulation and automatic self-test feature*

(iii) Divisional RPS trip test, by manually actuating divisional trip test switch

(iv) Manual Scram Test (RPS), by actuating manual scram switches

(v) MSIV test close, by manually operating test close switches

(vi) Divisional MSIV isolation test, by manually actuating divisional isolation test switches

(b) Engineered Safety Features (ESF) Actuation System Tests

(i) Setpoint validation, using input simulation and automatic self-test feature

(ii) Trip logic test of ~~SLU~~ SLF*, using input simulation and automatic self-test feature*

(iii) Equipment operation, using input simulation or manual

(c) Acceptability of the SSLC bypass functions, including division-of-sensor bypass and division-out-of-service bypass as specified by the appropriate SSLC system design specifications

(d) Capability of the automatic self-test feature in verifying proper operation of the functional logic of each SSLC logic processor

(e) Proper operation of fail-safe (de-energize-to-operate) design feature of SSLC upon loss of AC or DC power as described by the appropriate design specification

(f) Correct functioning of the digital trip ~~module (DTM)~~ function (DTF)*, trip logic ~~unit (TLU)~~* function (TLF) *or safety system logic ~~unit (SLU)~~* function (SLF) *in SSLC signal processing as described by the appropriate design-specification.*

(g) Proper annunciator action for trip of any channel, including annunciation display and reset functions.

14.2.12.1.12 ~~*Multiplexing System*~~ Data Communication Function Preoperational Test

STD DEP T1 3.4-1

(1) Purpose

To verify proper functioning of the plant ~~multiplexing system~~ data communications*, including both essential and nonessential ~~(EMS and NEMS) subsystems~~* functions*.*

(2) Prerequisites

The construction test have been successfully completed, and the SCG has reviewed the test procedure and approved the initiation of testing. The power supply, ~~logic units (SSLC),~~ and other components ~~(MCU, RMU, CMU)~~ associated with the ~~essential and non-essential multiplexing systems~~ data communications function *shall be operable. The interfacing systems' actuators, alarms, and displays which receive the processed control signals ~~from the essential and non-essential multiplexing systems~~ shall be operational. The data acquisition and communication software required to support the ~~essential and non-essential multiplexing system~~* data communication *functions shall be available.*

(3) General Test Method and Acceptance Criteria

Since this ~~system~~ function provides the *~~is the primary~~ communication interface between the various plant systems, it shall be adequately tested during the preoperational phase testing performed on those interconnected systems. The integrated hardware/software testing shall check the system functional performance and interface requirements as specified in ~~the non-essential multiplexing system (NEMS) and essential multiplexing system (EMS)~~ design specifications. The verification and validation (V&V) tests are performed to check the input signal coming from appropriately assigned input point and the output signal to the appropriately assigned signal points. This testing shall also ~~check~~* test *the ~~function of the redundant multiplexing system and the fail-safe function of both systems.~~* redundant data communication functions and their fail-safe function. *The capability of both warm and cold starts upon power interruption ~~and automatic self-test function of the systems~~ shall ~~also~~ be demonstrated ~~to meet the design requirements. Additionally, after the above verification, the validated essential multiplexing system shall be checked for final validation during integrated EMS/SSLC testing as part of the SSLC preoperational test (Subsection 14.2.12.1.11).~~ Testing shall include confirmation of every ~~multiplexed~~ sensor signal for ~~accuracy, and~~ functional requirements of control, interlock or display as specified in the documents of the system*s *integrated within the SSLC* or PICS*.*

14.2.12.1.13 Leak Detection and Isolation System Preoperational Test

STD DEP T1 2.14-1

(2) Prerequisites

(k) Other auxiliary systems (e.g., PRM, RD, RCW, HNCW, HVAC, ACS, ~~FCS~~, SPCU, etc.) associated with the LDS functions

14.2.12.1.14 Reactor Protection System Preoperational Test

STD DEP T1 3.4-1

(2) Prerequisites

Additionally, appropriate simulated RPS ~~multiplexed~~ input signals shall be provided for each of the four RPS divisions.

14.2.12.1.16 ~~Process Computer~~ Plant Computer Functions Preoperational Test

STD DEP T1 3.4-1

(1) Purpose

To verify the proper operation of the ~~Process Computer System (PCS)~~ Plant Computer Functions (PCFs)*, including the Performance Monitoring and Control System (PMCS) and the Power Generation Control System (PGCS) and their related functions.*

(3) General Test Methods and Acceptance Criteria

Proper performance of system hardware and software will be verified by a series of individual and integral tests. These tests shall demonstrate that the ~~PCS~~ PCFs*, including PMCS and PGCS, operate~~s~~ properly as specified in Subsection 7.7.1.5 and applicable ~~PCS~~*PCF *design specifications through the following testing:*

(d) Proper data transmission and interface with other plant equipment such as the ~~multiplexing system,~~ neutron monitoring system, ATLM~~, site host computer~~ and emergency operation facility.

14.2.12.1.17 Automatic Power Regulator Preoperational Test

STD DEP T1 3.4-1

(2) Prerequisites

*The ~~Process Computer System~~*Plant Computer Functions (PCFs)*, RCIS, RFC System, Turbine Control System, SB&PC System, and other required system interfaces shall be available to support the specified system testing.*

14.2.12.1.18 Remote Shutdown System Preoperational Test

STD DEP T1 2.14-1

STD DEP 8.3-1

(2) Prerequisites

The construction tests have been successfully completed, and the SCG has reviewed the test procedure and approved the initiation of testing. Communication shall be established between the RSS panel, main control room, and each system associated with the RSS. Additionally, the 480 VAC and ~~6.9~~ 4.16 kVAC electrical power system shall be in operation and available and 125 VAC/125 VDC control power shall be supplied to the remote shutdown panel. The applicable portions of the RHR, HPCF, RCW, RSW, NBS, ACS, ~~FCS~~ and MUWC shall be available, as needed, to support the specified testing.

14.2.12.1.45.4 Electrical Power Distribution System Preoperational Test

STD DEP 8.3-1

STD DEP Admin

(2) Prerequisites

The construction tests for the individual component associated with the EPDS have been successfully completed, and the Startup Coordination Group *(SCG) has reviewed the test procedure and approved the initiation of testing. All the necessary permanently installed and test instrumentation shall have been properly calibrated and operational. Appropriate electrical power sources shall be available for remote control, parameter information and annunciators associated with the electrical power distribution system. Adequate ventilation to both switchgear and battery rooms shall be available and operational. The portion of Fire Protection System covering the EPDS areas shall be available for use. Additionally, the plant EPDS (27 kV, ~~6.9 kV,~~* 13.8 kV, 4.16kV, *480V, ~~and~~ 120 VAC, and 125 VDC power) shall be installed prior to this test.*

14.2.12.1.50 Fuel-Handling and Reactor Component Servicing Equipment Preoperational Test

STD DEP 9.1-1

(3) General Test Methods and Acceptance Criteria

Fuel-handling and reactor component servicing equipment testing described herein includes that of the reactor building crane, refueling machine *~~bridge~~, auxiliary platform, and the associated hoists and grapples, as well as other lifting and rigging devices.*

Performance shall be observed and recorded during a series of individual component and integrated system tests. These tests shall demonstrate that the system operates properly as described in Subsection 9.1.4 during following testing:

(d) Proper assembly and operation of reactor vessel servicing equipment, including reactor vessel servicing tools, main steamline plugs, shroud head stud wrench, head holding pedestal, ~~RPV head tensioning and detensioning,~~ dryer/separator strongback, and RPV *head strongback carousel* and stud tensioning system*.*

(f) Dynamic and static load testing of all cranes, hoists, and associated lifting and rigging equipment, including static load testing at 125% of rated load and full operational testing at 100% of rated load. Heavy load strongbacks will be tested to ANSI 14.6 requirements.

(h) Proper installation and operation of fuel servicing equipment, such as fuel preparation machine, new fuel inspection stand, channel bolt wrenches and handling tools, and *general-purpose grapples~~ and fuel pool vacuum sipper~~.*

(i) Correct installation and operation of under-reactor vessel servicing equipment, including FMCRD servicing tools and handling equipment, incore ~~flange seal test plug~~ sealing equipment*, and RIP handling equipment.*

14.2.12.1.51 Expansion, Vibration and Dynamic Effects Preoperational Test

STD DEP T1 2.14-1

(2) Prerequisite

(b) The BOP scope of piping systems are as follows:

(xiii) ~~FCS hydrogen recombiner piping~~ Not Used

14.2.12.1.52 Reactor Vessel Flow-Induced Vibration Preoperational Test

The following supplement augments that provided by this subsection.

STP 3 is designated as the prototype ABWR plant in accordance with the guidance in Regulatory Guide 1.20, Revision 3. STP 4 is considered a Category I, non-prototype plant.

For STP 3, the report provided in Reference 3.9-13 summarizes the analytical portion of the program in terms of maximum vibrational response levels of overall structures and components and the measurement and inspection plans.

For STP 4, Reference 3.9-14 summarizes the analytical models and validation and predictive analysis results for the reactor internals, and includes the inspection plan.

14.2.12.1.55 Reactor Water Chemistry Control Systems Preoperational Test

STD DEP T1 2.14-1

(2) Prerequisites

The construction tests have been successfully completed, and the SCG has reviewed the test procedure(s) and approved the initiation of testing. The ~~FCS,~~ Offgas System, appropriate electrical power, and other required interfacing systems shall be available, as needed, to support the specified testing.

The following supplement augments that provided by this subsection.

Testing for systems that will not be placed in service during the initial operating cycle may be deferred.

14.2.12.1.64 Main Turbine Control System Preoperational Test

STP DEP 10.2-1

(1) Purpose

To verify proper operation of the TCS, which operates the turbine stop valves, control valves, ~~combined intermediate valves (CIV)~~ intercept valves (IVs), and intermediate stop valves (ISVs) *through their associated actuators and hydraulic control.*

(3) General Test Methods and Acceptance Criteria

(a) Proper functioning of instrumentation and system controls, including operating and trip devices for main stop and control valves ~~and combined intermediate valves (CIV)~~, intercept valves (IVs), and intermediate stop valves (ISVs)

(c) Correct operation of main stop and control valves ~~and combined intermediate valves~~, IVs, and ISVs *in response to simulated signals related to turbine speed, load, and reactor pressure as specified in Subsection 10.2.2*

(e) Proper operation of main stop and control valves ~~and CIVs~~, IVs, and ISVs *upon loss of control system electrical power or hydraulic system pressure*

(f) Capability of manual operation of main stop and control valves ~~and CIVs~~, IVs, and ISVs, *including verification of position indications and stroke rate adjustments*

14.2.12.1.70 Main Turbine and Auxiliaries Preoperational Test

STP DEP 10.2-1

STP DEP 10.2-3

STD DEP Admin

(2) Prerequisites

To the extent practicable, a ~~temporary~~ steam supply shall be available to apply to the main turbine~~ and reactor feed pump seals~~.

(3) General Test Methods and Acceptance Criteria

(g) Proper performance capability of the Emergency Trip System (ETS) in shutting down the turbine and closing the main stop and control valves ~~and CIVs~~, IVs, and ISVs. This test shall also verify the instrumentation associated with the ETS for correct functions and setpoints.

(h) Proper operation of the turbine overspeed protection system to provide ~~mechanical overspeed trip and electrical backup overspeed trip~~ primary overspeed trip and emergency overspeed trip functions *as specified by Subsection 10.2.2.4 and the manufacturer's technical instruction manual. This test can be performed in the startup test stage in conjunction with the major transient testing.*

14.2.12.1.72 ~~*Flammability Control System Preoperational Test*~~ Not Used

STD DEP T1 2.14-1

~~*(1) Purpose*~~

~~*To verify the ability of the Flammability Control System (FCS) to recombine hydrogen and oxygen and therefore maintain the specified inert atmosphere in the primary containment during long term post accident conditions.*~~

~~*(2) Prerequisites*~~

~~*The construction tests, including the pressure proof test, have been successfully completed, and the SCG has reviewed the test procedure and approved the initiation of testing. All system instrumentation shall be in accordance with the FCS instrument data sheets and calibrated per instrument supplier's instructions. All services, including water, electricity and communications, shall be available and performing at their rated design levels (flow, voltage, pressure, etc.). The wetwell and drywell airspace regions of the primary containment shall be intact, and all other required interfaces shall be available, as needed, to support the specified testing.*~~

~~*(3) General Test Methods and Acceptance Criteria*~~

~~*Performance shall be observed and recorded during a series of individual component and integrated system tests. This test shall demonstrate that the FCS operates properly as specified in Subsection 6.2.5 and applicable FCS design specifications through the following testing:*~~

~~(a) Proper operation of instrumentation and system controls in all combinations of logic~~

~~(b) Verification of various component alarms including alarm actuation and reset, alarm set value, alarm indication and operating logic~~

~~(c) Proper operation of all motor-operated and air-operated valves, including stroking using valve opening/closing switches at the control room, verification of indicator lamp, timing and isolation function, if applicable~~

~~(d) Proper system operating conditions (i.e., the system shall be operated normally without any abnormalities, vibration, or leakage in components, valves, and piping within the FCS) for the following test cases while the FCS is in accident operating mode and regular testing mode of operation as defined in the design specification:~~

~~(i) Triple heater test for inside heater box temperature during steadystate operation~~

~~(ii) Blower running test for blower flow rate, flow control valve position and each line's gas flow rate~~

~~(iii) Reaction chamber heatup test for blower flow rate, flow control valve position, each line's gas flow rate and the time for heating up the reactor chamber~~

~~(e) Proper operation of interlocks including operation of all components subject to interlocking, interlocking set value and operating logic~~

~~(f) Proper operation of permissive, prohibit, and bypass functions~~

~~(g) Proper system operation while powered from primary and alternate sources, including transfers, and in degraded modes for which the system is expected to remain operational~~

14.2.12.1.75 Liquid and Solid Radwaste Systems Preoperational Tests

STD DEP 11.2-1

STD DEP 11.4-1

STD DEP Admin

(3) General Test Methods and Acceptance Criteria

(b) Proper operation of equipment protective features and automatic isolation functions, including those for ventilation systems and liquid effluent pathways (as applicable)*.*

(g) Acceptable functions of the ~~thin film dryer, pelletizer, pellet filling machine, mixing tank, drum conveyor and incinerator during integrated~~ solid radwaste system ~~operation in solidifying, packaging, compacting, and incinerating processes,~~ as specified by Subsection 11.4.

(h) Proper operation of filter ~~and demineralizer regeneration~~ cycles of the liquid radwaste system and their associated support facilities.

(j) Capability of the solid radwaste system to receive, process and transfer waste ~~between designated locations using simulated waste variation~~ in accordance with the Process Control Program (PCP).

(k) Proper operation of the automatic isolation function of ~~radwaste system~~ containment isolation valves upon receipt of a simulated containment isolation initiation signal.

14.2.12.1.77 Ultimate Heat Sink Preoperational Test

The conceptual design information in this subsection of the reference ABWR DCD is replaced with the following site-specific supplemental information.

(2) Prerequisites

The construction tests have been successfully completed, and the SCG has reviewed the test procedure and approved the initiation of testing. All instrumentation and devices associated with the UHS has been properly calibrated. The HVAC System within ~~spray pond~~ the RSW *pump* house *~~structure~~ is operational and available. The Reactor Service Water System is operational and available for all anticipated modes of RSW System operation. Sufficient quantity of water ~~are~~* is *available in the ~~spray pond~~* UHS basin *for use. All of the required interfacing systems shall be available, as needed, to support the specified testing.*

(3) General Test Methods and Acceptance Criteria

(b) Proper operating conditions and performance capability of the UHS cooling tower *spray networks during all anticipated modes of the RSW System operations as specified in Subsection 9.2.5.4.1.*

(d) Proper operation of the makeup water valve to maintain proper water level in the UHS ~~spray pond~~ basin *through makeup line and maintain water quality in conjunction with the blowdown operation as specified in Subsection 9.2.5.3.4.*

(e) Proper operation of blowdown from the UHS ~~spray pond~~ basin to remove excess water and maintain water quality control through the blowdown line as specified in Subsection 9.2.5.3.4.

14.2.12.2.5 Control Rod Drive System Performance

STD DEP 4.6-1

(2) Prerequisites

The preoperational tests have been completed and plant management has reviewed the test procedures and approved the initiation of testing. For each scheduled testing iteration, the plant shall be in the appropriate operational configuration with the specified prerequisite testing complete. The applicable instrumentation shall be checked or calibrated, as appropriate. Additionally, a special test fixture contains ~~a small pump associated~~ hydraulic controls and shall be available for performing drive line friction testing.

STD DEP 14.2-1

(3) Description

In addition, the drive-line friction will be measured in terms of the pressure under hollow piston for each CRD at cold conditions (if not previously done during preoperational test phase)~~ and again verified on four selected CRDs at rated temperature and pressure conditions during initial heatup of the startup test program~~.

14.2.12.2.6 Neutron Monitoring System Performance

STD DEP Vendor, Vendor Replacement

(4) Criteria

Level 2

Each LRPM reading shall agree with its calibrated value within the accuracy specified by the ~~GE~~ Startup Test Specifications.

The total ATIP uncertainty (including random noise and geometry uncertainty components) shall be less than the limits specified by the ~~GE~~ Startup Test Specifications.

14.2.12.2.7 ~~*Process Computer*~~ Plant Computer Functions Operation

STD DEP T1 3.4-1

STD DEP Vendor, Vendor Replacement

(1) Purpose

To verify the ability of the ~~Process Computer System (PCS)~~ Plant Computer Functions (PCFs) to collect, process, and display plant data, execute plant performance calculations, and interface with various plant control systems during actual plant operating conditions.

(3) Description

During plant heatup and the ascension to rated power, the various process variables that are monitored by the ~~PCS~~PCFs and required by the reactor core performance and plant performance calculations begin to enter their respective ranges for normal plant operation. During this time, it will be verified that the ~~PCS~~PCFs correctly receive~~s~~, validate~~s~~, process~~es~~, and display~~s~~ the applicable plant information. Recording and playback features will also be tested. Data manipulation and plant performance calculations using actual plant inputs will be verified for accuracy, using independent calculations for comparison. Also, the ability of the ~~PCS~~PCFs to interface correctly with other plant control systems during operation will be demonstrated.

(4) Criteria

Level 2

The reactor core performance calculation programs that calculate the core performance parameters (MCPR, MAPLHGR, and MLHGR) and LPRM gain adjustment factors shall produce results that agree with an independent method of calculation within the accuracy specified by the ~~GE~~ Startup Test Specifications.

14.2.12.2.8 Core Performance

STD DEP Vendor, Vendor Replacement

(4) Criteria

Level 1

~~For any non-GE fuel only, the~~ Maximum Linear Heat Generation Rate (MLHGR) shall not exceed the limits specified by the plant Technical Specifications.

14.2.12.2.9 Nuclear Boiler Process Monitoring

(4) Criteria

Level 2

The difference between the actual reference leg temperature and the value(s) assumed during initial calibration shall be less than that amount which will result in a scale end point error as specified in the ~~GE~~ Startup Test Specifications (i.e., 1% of the instrument span for each range).

With all recirculation pumps in operation at rated core flow and power conditions, the bottom head temperature as measured by the bottom drain line thermocouple shall agree with the saturated water temperature corresponding to steam dome pressure within the accuracy specified by the ~~GE~~ Startup Test Specifications.

14.2.12.2.12 Reactor Internals Vibration

The following supplement augments that provided by this subsection.

STP 3 is designated as the prototype ABWR plant in accordance with the guidance in Regulatory Guide 1.20, Revision 3. STP 4 is a Category I, non-prototype plant.

For STP 3, Reference 3.9-13 summarizes the analytical models, predictive analysis results, and the measurement and inspection plans.

For STP 4, Reference 3.9-14 summarizes the analytical models and predictive analysis results, and includes the inspection plan.

14.2.12.2.13 Recirculation Flow Control

STD DEP Vendor, Vendor Replacement

(4) Criteria

Level 2

For any of the above test maneuvering, no high flux scram shall result as stated in the applicable Recirculation Flow Control System Design Specification and the trip avoidance margins shall at least comply with the requirements as stated in the ~~GE~~ Startup Test Specifications (i.e., at least 7.5% for neutron flux and 5.0% for simulated heat flux).

14.2.12.2.15 Pressure Control

(4) Criteria

Level 2

For all pressure controller transients, no high flux or vessel pressure scram shall result and the trip avoidance margin shall at least meet the requirements as stated in the ~~GE~~ Startup Test Specifications (i.e., at least 7.5% for neutron flux, 5.0% for simulated heat flux and 68.6 kPaD for vessel pressure).

14.2.12.2.16 Plant Automation and Control

STD DEP T1 3.4-1

(2) Prerequisites

Additionally, affected systems and equipment, including lower level control systems such as RCIS, recirc flow control, feedwater control and turbine control, as well as monitoring and predicting functions of the ~~plant process computer and/or automation computer~~ PCFs, shall have been adequately tested under actual operating conditions.

14.2.12.2.17 Reactor Recirculation System Performance

STD DEP Vendor, Vendor Replacement

(4) Criteria

Level 2

At rated power and flow, the measured core pressure drop shall not exceed the predicted value by an amount as required by the ~~GE~~ Startup Test Specifications.

14.2.12.2.22 RCIC System Performance

STD DEP T1 2.4-3

STD DEP Vendor, Vendor Replacement

(1) Description

*The RCIC System will be tested in two ways, through a full flow test line leading to the suppression pool and by flow injection directly into the reactor vessel. The first set of tests will consist of manual and automatic mode starts and steady-state operation at 1.03 MPaG and near rated reactor pressure conditions, in the full flow test mode. During these tests, an attempt will be made to throttle pump discharge pressure in order to simulate reactor pressure and the expected pipeline pressure drop. This testing is done to demonstrate general system operability. After the operability demonstration, the RCIC ~~turbine speed~~ control loop will be adjusted at near rated reactor pressure conditions. Reactor vessel injection tests at near rated reactor pressure will follow to complete the controller adjustments, as necessary, and to demonstrate automatic starting from hot standby condition. Subsequently, a reactor vessel injection demonstration at 1.03 MPaG reactor pressure, including an automatic mode start and stability demonstration, shall be conducted to verify satisfactory system performance under the final set of optimized controller settings. ~~Proper controller adjustment is verified by introducing small step disturbances in speed and flow demand and then demonstrating satisfactory system response at both low RCIC pump flow (but~~

~~*above minimum turbine speed) and near rated RCIC pump flow conditions, in order to span the RCIC operating range.*~~

(2) Criteria

Level 2

~~*The RCIC turbine speed and pump flow control loops shall be adjusted so that the RCIC System flow related variable responses to test inputs are at least quarter-damped (i.e., the decay ratio of the second-to-first overshoot of each variable is less than or equal to 0.25) as stated in the applicable RCIC System Design Specification.*~~

~~*The RCIC Turbine Gland Seal System shall be capable of preventing significant steam leakage to the atmosphere.*~~

For automatic start tests, in order to provide margins to overspeed and isolation trip setting, the transient start first and subsequent turbine speed peaks shall not exceed the requirement specified by the ~~GE~~ Startup Test Specifications.

The RCIC Turbine Steam Supply line high flow isolation trip shall be calibrated to actuate at the value specified in the plant Technical Specifications.

14.2.12.2.25 Turbine Valve Performance

STD DEP Vendor, Vendor Replacement

(4) Criteria

Level 2

During full closure testing of individual turbine control, stop, and bypass valves, the transient peak values of reactor vessel pressure, neutron flux, simulated fuel surface heat flux, and main steamline flow must have adequate scram avoidance margins as required by the ~~GE~~ Startup Test Specifications.

14.2.12.2.26 MSIV Performance

(4) Criteria

Level 2

During full trip closure testing of individual MSIV, the transient peak values of reactor vessel pressure, neutron flux, simulated fuel surface heat flux, and main steamline flow must have adequate scram avoidance margins as required by the ~~GE~~ Startup Test Specifications.

14.2.12.2.27 SRV Performance

(4) Criteria

Level 2

The temperature measured by thermocouples on the discharge side of the safety/relief valves shall return to the temperature recorded before the valve was opened within 5.6°C range as specified in the ~~GE~~ Startup Test Specifications.

During the manual actuation of each SRV, the steam flow discharge through the valve (as measured by change in MWe, BPV position etc.) shall not differ from the average of all the valve responses by more than the limit as specified in the ~~GE~~ Startup Test Specifications.

14.2.12.2.28 Loss of Feedwater Heating

STD DEP Admin

(4) Criteria

Level 1

The increase in simulated fuel surface heat flux shall not exceed the predicted Level 2 criterion value by more than 2%, as specified by the ~~Transient Safety Analysis Design Report (TSADR)~~ Startup Test Analysis Report (STAR) *document*.

Level 2

The increase in simulated fuel surface heat flux shall not exceed the predicted value referenced to the actual test values of feedwater temperature drop and power level. The predicted value is provided in the plant ~~TSADR~~ STAR *and will be used as the basis to which the actual transient is compared.*

14.2.12.2.29 Feedwater Pump Trip

STD DEP Vendor, Vendor Replacement

(4) Criteria

Level 2

The reactor shall avoid low water level scram by the margin required by the ~~GE~~ Startup Test Specifications from an initial water level halfway between the high and low level alarm setpoints.

14.2.12.2.30 Recirculation Pump Trip

(4) Criteria

Level 2

The reactor water level swell during RIP trip transients shall have a minimum scram avoidance margin as required by the ~~GE~~ Startup Test Specifications.

During RIP trip recovery, the scram avoidance margins for neutron flux and simulated fuel surface heat flux shall at least meet the requirements as specified by the ~~GE~~ Startup Test Specifications.

14.2.12.2.33 Turbine Trip and Load Rejection

STD DEP Admin

STD DEP Vendor, Vendor Replacement

(4) Criteria

Level 1

For turbine trip or load rejection event at power levels greater than 50% of rated, bypass valve quick opening shall begin no later than the specified time delay following the start of stop/control valve closure, and bypass valves shall be opened to a point corresponding to greater than or equal to 80% of their capacity within the specified time interval from the beginning of stop/control valve closure. The time delay and time interval are specified in the ~~GE~~ Startup ~~Transient~~ Test Specifications.

Feedwater Control System settings must prevent flooding of the steamline following generator or turbine trip transients.

The core flow coastdown transient during the first three seconds after either turbine trip or load rejection at greater than 50% of rated power must be bounded by the limiting curves defined in the plant ~~transient/stability performance requirements~~ Transient and Stability Basic Design Specification *document.*

The positive change in vessel dome pressure occurring within 30 seconds after either turbine trip or load rejection at greater than 50% of rated power must not exceed the Level 2 criteria by more than 172.6 kPaD as specified by the ~~Transient Safety Analysis Design Report (TSADR)~~ Startup Test Specification *document.*

The positive change in simulated fuel surface heat flux shall not exceed the Level 2 criteria by more than 2% as specified by the applicable ~~TSADR~~ Startup Test Specification *document.*

Level 2

If any SRVs open, the temperatures, measured by the thermocouples on the discharge side of the actuated SRVs must return to the temperature recorded before the valve was opened within 5.6°C range as specified by the ~~GE~~ Startup Test Specifications.

The positive change in vessel dome pressure and simulated fuel surface heat flux occurring within the first 30 seconds after the initiation of either turbine trip or load rejection must not exceed the predicted values referenced to actual test conditions of initial power level and vessel dome pressure and corrected for the measured control rod insertion speed and initiation time. The predicted values are provided in the applicable ~~TSADR~~ STAR document based on the beginning-of-cycle design basis analysis and shall be used as the basis to which the actual transient is compared.

14.2.12.2.34 Reactor Full Isolation

(4) Criteria

Level 1

The positive change in vessel dome pressure occurring within the first 30 seconds after closure of all MSIVs must not exceed the Level 2 criteria by more than 172.6 kPaD as specified by the applicable ~~TSADR~~ Startup Test Specification document.

The positive change in simulated fuel surface heat flux shall not exceed the Level 2 criteria by more than 2%, as specified by the applicable ~~TSADR~~ Startup Test Specification document.

Level 2

If any SRVs open, the temperature measured by the thermocouples on the discharge side of the actuated SRVs must return to the temperature recorded before the valve was opened within 5.6°C range as specified by the ~~GE~~ Startup Test Specifications.

The HPCF and RCIC Systems shall be initiated automatically, if the low-water-level (Level 1.5 and 2, respectively) is reached during the initial transient following isolation. The minimum capacity and maximum delay time (including instrumentation delay) between the time vessel water level drops below the setpoint and makeup water enters the vessel shall meet the safety analysis requirements specified in the applicable ~~plant transient/stability performance requirements~~ Emergency Core Cooling System Design Requirements and Startup Test Specifications documents.

The positive changes in vessel dome pressure and simulated fuel surface heat flux occurring within the first 30 seconds after the closure of all MSIVs

must not exceed the predicted values referenced to actual test conditions of initial power level and dome pressure and corrected for the measured control rod insertion speed and initiation time. The predicted values are provided in the applicable ~~TSADR~~ STAR document based on the beginning-of-cycle design basis and shall be used as the basis to which the actual transient is compared.

14.2.13 COL License Information

14.2.13.1 Other Testing

The following site-specific supplement addresses COL License Information Item 14.1.

FSAR Section 14.2S provides the additional testing requirements for the following systems.

(1) Electrical switchyard and equipment

(2) Personnel monitors and radiation survey instruments

(3) Site security equipment

There is no automatic dispatcher control system for STP 3 & 4.

14.2.13.2 Test Procedures/Startup Administrative Manual

The following site-specific supplement addresses COL License Information Item 14.2.

The Startup Administrative Manual document delineates the processes that will be used to administer the Initial Test Program at STP 3 & 4. These processes include:

- Conduct of the test program (Subsection 14.2.4)
- Review, evaluation, and approval of test results
- Methods for controlling pre-fuel load checks, initial fuel loading, pre-critical testing and initial criticality
- Test program schedule
- Determinations of operability and availability of interfacing support systems requirements

Startup Test Specification document provides guidance for sequencing testing during the Startup Test Phase. This scoping document contains the following elements for the Startup Test Phase of the Initial Test program:

- Testing objectives and acceptance criteria

- Plant operational conditions at which tests are to be conducted, testing methodologies to be utilized, specific data to be collected, and acceptable data reduction techniques.
- Reconciliation methods needed to account for test conditions, methods or results if testing is performed at conditions other than representative design operating conditions

Site-specific Preoperational and Startup Test Specifications, containing testing objectives and acceptance criteria, will be provided to the NRC at least 6 months prior to the start of the Initial Test Program. (COM 14.2-2) These scoping documents will delineate:

- Plant operational conditions at which tests are to be conducted, testing methodologies to be utilized, specific data to be collected, and acceptable data reduction techniques.
- Reconciliation methods needed to account for test conditions, methods or results if testing is performed at conditions other than representative design operating conditions.

Approved preoperational test procedures will be available for NRC review approximately 60 days prior to their intended use but no later than 60 days prior to fuel loading (Subsection 14.2.3). (COM 14.2-3)

Approved startup test procedures will be available for NRC review approximately 60 days prior to fuel loading (Subsection 14.2.3). (COM 14.2-4)

Table 14.2-1 Startup Test Matrix

Power Ascension Test	Testing Plateau OV	HU	LP	MP	HP	Notes
Control Rod Drive System Performance:						
Friction Testing	✓	~~✓~~				~~*HU - 4 selected rods at rated pressure*~~
~~*Process Computer System*~~Plant Computer Functions *Operation:*						
NSS/BOP Monitoring Programs		✓	✓	✓	✓	

14.2S Initial Plant Test Program

This information supplements the information provided in Section 14.2 of the reference ABWR DCD.

14.2S.1 Organization and Training in Support of the Initial Test Program

Training for plant staff is described in Section 13.2. Additional training for test personnel consists of on-site training to the procedures processes described in the Site Startup Administrative Manual, the Startup Administrative Procedures, and on lessons learned from previous startups.

Combined startup testing training sessions are conducted with plant operations and key test personnel. This training includes the use of the plant simulator for the more complex tests.

14.2S.2 First of a Kind Systems

The following tests are defined as first of a kind as they contain new, unique, or special tests for new design features associated with SSCs that are part of a new reactor design under 10 CFR Part 52.

(1) Preoperational Tests

(a) Reactor Recirculation System Test (reference ABWR DCD 14.2.12.1.2)

(b) Recirculation Flow Control System Test (reference ABWR DCD 14.2.12.1.3)

(c) Feedwater Control System Test (reference ABWR DCD 14.2.12.1.4)

(d) Control Rod Drive System (CRD) Test (reference ABWR DCD 14.2.12.1.6)

(e) Rod Control and Information System Test (reference ABWR DCD 14.2.12.1.7)

(f) Safety System Logic and Control Test (reference ABWR DCD 14.2.12.1.11)

(g) Data Communications Function Preoperational Test (reference ABWR DCD 14.2.12.1.12)

(h) Leak Detection and Isolatin System Test (reference ABWR DCD 14.2.12.1.13)

(i) Reactor Protection System Test (reference ABWR DCD 14.2.12.1.14)

(j) Neutron Monitoring System Test (reference ABWR DCD 14.2.12.1.15)

(k) Automatic Power Regulator Test (reference ABWR DCD 14.2.12.1.17)

(l) Combustion Turbine Generator (reference ABWR DCD 14.2.12.1.45)

(m) Steam Bypass and Pressure Control System Test (reference ABWR DCD 14.2.12.1.66)

(2) Startup Testing

(a) Control Rod Drive System Performance (reference ABWR DCD 14.2.12.2.5)

(b) Neutron Monitoring Sytem Performance (reference ABWR DCD 14.2.12.2.6)

(c) Recirculation Flow Control (reference ABWR DCD 14.2.12.2.13)

(d) Plant Automation and Control (reference ABWR DCD 14.2.12.2.16)

(e) Loss of Feedwater Heating (reference ABWR DCD 14.2.12.2.28)

(f) Feedwater Pump Trip (reference ABWR DCD 14.2.12.2.29)

(g) Recirculation Pump Trip (reference ABWR DCD 14.2.12.2.30)

(h) Turbine Trip and Load Rejection (reference ABWR DCD 14.2.12.2.33)

14.2S.3 Overlap of Unit 3 Test Program with Unit 4 Test Program

The project schedule indicates that the Unit 4 fuel load date is approximately 12 months later than that for Unit 3. Accordingly, the startup schedule indicates that Unit 3 will have completed most of the low and mid power testing before the preoperational program for Unit 4 commences. Unit 3 will be given priority should any additional personnel be required for initial startup testing. During the period of overlap, startup personnel will be allowed to work on both units.

14.2S.4 Testing Required to be Completed Prior to Fuel Load

Table 14.2S-1 provides a cross-reference to each system preoperational test (or portion thereof) required to be completed before initial fuel loading, that is designed to satisfy the requirements for completing ITAAC in accordance with 10 CFR 52.99(a).

14.2S.12 Individual Test Descriptions

Systems and features to be tested for the initial test program were identified in the reference ABWR DCD. At the time of DCD approval, it was recognized that there would be additional features and interfacing systems necessary to provide a complete test program. Using the screening criteria provided in Regulatory Guide 1.68, as well as the requirements identified in the reference ABWR DCD Subsection 14.2.13.1, the following test descriptions are provided. Testing of plant security systems will be in

accordance with the equipment vendor recommendations and applicable industry and regulatory requirements. These requirements are addressed in the security plan.

14.2S.12.1 Preoperational Testing

14.2S.12.1.78 Makeup Water Purification Preoperational Test

(1) Purpose

To verify the ability of the Makeup Water Purified (MUWP) System to provide an adequate reserve of condensate quality water for makeup to the Condensate Storage Tank, as makeup water for Reactor Building Cooling Water, Turbine Building Cooling Water, Diesel Generator Cooling Water, and for other uses as designed.

(2) Prerequisites

The construction tests have been successfully completed, and the SCG has reviewed the test procedure and approved the initiation of testing. Additional prerequisites include but are not limited to the following:

(a) All system instrumentation shall be in accordance with the P&ID and Instrument Data Sheets and shall have been properly calibrated per the instrument supplier's instructions.

(b) The applicable power sources to supply electric power to motors, control circuits and instrumentation shall be available, as required, to support the performance of this testing.

(c) The system valve lineups shall have been completed in accordance with the applicable system operating procedures prior to the test.

(d) The Instrument Air System and The MWP System shall be available for use in support of this test, as required.

(e) A sufficient quantity of chemically acceptable water shall be available for performing this test.

(3) General Test Methods and Acceptance Criteria

Performance shall be observed and recorded during a series of individual component and integrated system tests. These tests shall demonstrate that the MUWP System operates properly as specified in Subsection 9.2.10 and applicable MUWP System design specifications through the following testing:

(a) Proper operation of instrumentation and system controls in all combinations of logic and instrument channel trip.

(b) Proper operation of permissive and prohibit interlocks including components subject to interlocking.

(c) Verification of various component alarms used to monitor system operation and status, including condensate storage tank (CST) volume and/or level, for correct alarm actuation and reset.

(d) Proper operation of freeze protection devices, if applicable.

14.2S.12.1.79 Makeup Water Preparation Preoperational Test

(1) Purpose

To verify the ability of the Makeup Water Preparation (MWP) System to provide an adequate quantity of makeup quality water for makeup to the Makeup Water Purified and Potable Water Systems, the condensate storage tank, the Reactor Building Cooling Water, Turbine Building Cooling Water and Diesel Generator Cooling Water Systems, and for other uses as designed.

(2) Prerequisites

The construction tests have been successfully completed, and the SCG has reviewed the test procedure and approved the initiation of testing. Additional prerequisites include but are not limited to the following:

(a) All system instrumentation shall be in accordance with the P&ID and Instrument Data Sheets and shall have been properly calibrated per the instrument supplier's instructions.

(b) The applicable power sources to supply electric power to motors, control circuits and instrumentation shall be available, as required, to support the performance of this testing.

(c) The system valve lineups shall have been completed in accordance with the applicable system operating procedures prior to the test.

(d) Instrument air system shall be available for use in support of this test, as required.

(e) A sufficient quantity of chemically acceptable water shall be available for performing this test.

(f) Temporary strainer screens shall be installed at the pump inlets of MWP throughout the test.

(3) General Test Methods and Acceptance Criteria

Performance shall be observed and recorded during a series of individual component and integrated system tests. These tests shall demonstrate that

the MWP System operates properly as specified in Subsection 9.2.8 and applicable MWP System design specifications through the following testing:

(a) Proper operation of instrumentation and system controls in all combinations of logic and instrument channel trip.

(b) Proper operation of permissive and prohibit interlocks including components subject to interlocking.

(c) Verification of various component alarms used to monitor system operation and status, including condensate storage tank (CST) volume and/or level, for correct alarm actuation and reset.

(d) Proper operation of freeze protection devices, if applicable.

(e) Verification that each unit of the MWP pumps can be operated normally during the following system operation tests:

(i) System operation test to confirm pump performance including: stable operation condition, pump discharge pressure comparison against the shop test pump curve, and the ability to provide desired flow rates to each applicable system and/or component.

(ii) Pump minimum flow test to confirm a stable pump operation and ability to operate continuously with pump discharge valve in the closed position.

(iii) Standby pump automatic start test to confirm auto start feature of a standby pump upon the trip of a running pump.

14.2S.12.1.80 Electrical Switchyard System Preoperational Test

(1) Purpose

To verify the ability of the Electrical Switchyard System to provide a means for supplying offsite AC power to safety-related and non-safety-related equipment including normal and standby lighting systems, via the appropriate distribution network(s).

(2) Prerequisites

The construction tests for the individual components associated with the Switchyard System have been successfully completed, and the SCG has reviewed the test procedure and approved the initiation of testing. All the necessary permanently installed and test instrumentation shall have been properly calibrated and be operational. Appropriate electrical power sources shall be available for remote control, parameter information and annunciators associated with the electrical power distribution system. Adequate ventilation to both switchgear and battery rooms shall be available and operational. The

portion of Fire Protection System covering the switchyard areas shall be available for use. Additionally, the plant EPDS (13.8kV and 4.16 kV power) shall be installed prior to this test.

(3) General Test Methods and Acceptance Criteria

The capability of the switchyard system to provide power to plant loads under various plant operating conditions and via normal and alternate paths will be demonstrated.

(a) Proper operation of relaying and logic.

(b) Proper operation of equipment protective devices, including permissive and prohibit interlocks.

(c) Verification of various component alarms used to monitor system and equipment status for correct alarm actuation and reset.

(d) Proper operation and load carrying capability of breakers, switchgear, transformers, and cables.

(e) Sufficient level of redundancy and electrical independence as specified for each application.

(f) Capability to transfer between onsite and offsite power sources as per design.

(g) Acceptable voltage and frequency variations between no load and full load conditions in accordance with Subsection 8.2.3. Verification of voltage and frequency variations can be performed in startup test stage since insufficient loads are supplied by these buses during preoperational test stage.

14.2S.12.1.81 Personnel Monitors and Radiation Survey Instruments Preoperational Test

(1) Purpose

Personnel contamination monitor and radiation survey instrument testing verifies that the devices operate in accordance with their intended function in support of the radiation protection program, as described in Chapter 12.

(2) Prerequisites

Personnel contamination monitors, radiation survey instruments, and appropriate sources are on-site.

(3) General Test Methods and Acceptance Criteria

The personnel contamination monitors and radiation survey instruments are source checked, tested, maintained, and calibrated in accordance with the manufacturers' recommendations or industry standards. The contamination monitor and instrument tests include:

(a) Proper function of the monitors and instruments to respond to radiation is verified, as required.

(b) Proper operation of instrumentation controls, battery, and alarms, if applicable.

(c) Proper functioning of laboratory equipment used to analyze or measure radiation levels and radioactive concentrations.

Table 14.2S-1 Comparison of Tier 1 (ITAAC) Testing Requirements with Tier 2 Test Descriptions

Title	Tier 1 Section	Tier 2 Section
Feedwater Control	2.2.3	14.2.12.1.4
Reactor Water Cleanup	2.6.1	14.2.12.1.19
Standby Liquid Control	2.2.4	14.2.12.1.5
Main Steam	2.1.1, 2.1.2	14.2.12.1.1
Residual Heat Removal	2.4.1	14.2.12.1.8
Reactor Core Isolation Cooling	2.4.4	14.2.12.1.9
Seismic Monitoring		14.2.12.1.74
Reactor Recirculation and Control	2.1.3, 2.2.8	14.2.12.1.2, 14.2.12.1.3
Rod Control and Information	2.2.1	14.2.12.1.7
Control Rod Drive Hydraulic	2.2.2	14.2.12.1.6
Fuel Handling and Vessel Servicing Equipment	2.5.5, 2.5.4, 2.5.3, 2.5.2, 2.5.1, 2.2.13, 2.2.12, 2.5.6, 2.5.12, 2.5.11, 2.5.10, 2.5.9, 2.5.8, 2.5.7, 2.15.9	14.2.12.1.50
Fuel Pool Cooling and Cleanup	2.6.2	14.2.12.1.21
High Pressure Core Flooder	2.4.2	14.2.12.1.10
Remote Shutdown	2.2.6	14.2.12.1.18
Safety System Logic and Control	3.4	14.2.12.1.11
Suppression Pool Cleanup	2.6.3	14.2.12.1.20
Reactor Vessel Flow Induced Vibration Test Without Fuel		14.2.12.1.52
Data Communication Function	2.7.5	14.2.12.1.12
Leak Detection	2.4.3	14.2.12.1.13
Automatic Power Regulator	2.2.9	14.2.12.1.17
Reactor Protection	2.2.7	14.2.12.1.14
Power Range Neutron Monitoring Subsystem	2.2.5	14.2.12.1.15
Traversing In-core Probe (TIP)		14.2.12.1.15
Feedwater and Condensate	2.10.2	14.2.12.1.53
Process Radiation Monitoring System	2.3.1	14.2.12.1.23
Standby Gas Treatment	2.14.4	14.2.12.1.36
Atmospheric Control System	2.14.6	14.2.12.1.35
Plant Computer Functions	2.2.11	14.2.12.1.16, 14.2.12.1.28
Drywell Cooling	2.14.7	14.2.12.1.33
Steam Bypass and Pressure Control	2.2.10	14.2.12.1.66
Reactor Building and Turbine Building Sampling and Analysis	2.11.20	14.2.12.1.22
Makeup Water	2.11.1, 4.3	14.2.12.1.59
Loose Parts Monitor System	2.8.4	14.2.12.1.73
Condensate Storage and Transfer	2.11.2	14.2.12.1.59

Table 14.2S-1 Comparison of Tier 1 (ITAAC) Testing Requirements with Tier 2 Test Descriptions (Continued)

Title	Tier 1 Section	Tier 2 Section
Fire Protection Building HVAC		14.2.12.1.34
Radwaste Sumps	2.9.1	14.2.12.1.76
Neutron Monitoring, Startup Range Neutron Monitoring Subsystem	2.2.5	14.2.12.1.15
Filter Demineralizer Resin Transfer		14.2.12.1.76
Fire Protection	2.15.6	14.2.12.1.48
Potable Water and Sanitary Waste	2.22.23	14.2.12.1.79
Reactor Building Cooling Water	2.11.3	14.2.12.1.29
Turbine Building Cooling Water	2.11.4	14.2.12.1.62
Reactor Building Service Water	2.11.9, 4.5	14.2.12.1.61
Normal Chilled Water	2.11.5	14.2.12.1.33
Emergency Chilled Water	2.11.6	14.2.12.1.32
Building Cranes and Handling Equipment	2.15.3	14.2.12.1.50
Miscellaneous Non-Radioactive Drains – Nuclear Island		14.2.12.1.49
Service Air – Nuclear Island	2.11.11	14.2.12.1.27
Instrument Air – Nuclear Island	2.11.12	14.2.12.1.27
Nitrogen Supply System – Nuclear Island	2.11.13	14.2.12.1.28
Electric Power Distribution – Nuclear Island	2.12.1	14.2.12.1.45
Vital AC Power Supply – Nuclear Island	2.12.14	14.2.12.1.45
Instrument and Control Power Supply – Nuclear Island	2.12.15	14.2.12.1.45
Lighting and Servicing Power Supply – Nuclear Island	2.12.17	14.2.12.1.45
DC Power Supply	2.12.12	14.2.12.1.45
Emergency Diesel Generator	2.12.13	14.2.12.1.45
Plant Grounding – Nuclear Island	2.12.9	14.2.12.1.45
Raceway System – Nuclear Island	2.12.8	14.2.12.1.45
Reactor Building HVAC	2.15.5	14.2.12.1.34
Control Building HVAC	2.15.5	14.2.12.1.34
Technical Support Center HVAC		14.2.12.1.34
Water Treatement Building HVAC		14.2.12.1.34
Switchgear Building HVAC	2.15.5	14.2.12.1.34
Hot Machine Shop HVAC		14.2.12.1.34
Radwaste Tunnel HVAC		14.2.12.1.34
Switchyard Systems	2.12.1, 4.2	14.2.12.1.45
Area Radiation Monitoring	2.3.2	14.2.12.1.24
Containment Atmospheric Monitoring	2.3.3	14.2.12.1.26

Table 14.2S-1 Comparison of Tier 1 (ITAAC) Testing Requirements with Tier 2 Test Descriptions (Continued)

Title	Tier 1 Section	Tier 2 Section
LOOP/LOCA		14.2.12.1.46
Man Machine Interface	2.7.1	14.2.12.1.16
Plant Communication	2.12.16	14.2.12.1.47
Condensate Polishing	2.10.4, 2.10.5, 2.10.6	14.2.12.1.54
Reactor Water Chemistry Control	2.11.18, 2.11.17, 2.11.7,	14.2.12.1.55
Main Condenser Evacuation		14.2.12.1.56
Offgas	2.10.22	14.2.12.1.57
Hotwell Level Control	2.10.21	14.2.12.1.58
Circulating Water	2.10.23, 4.9, 2.10.24, 2.11.22	14.2.12.1.60
Turbine Building Service Water	2.11.10, 4.6	14.2.12.1.63
Main Turbine Control	2.10.7, 2.10.8	14.2.12.1.64
Turbine Main Steam, Auxiliary Steam and Bypass Steam Systems	2.10.13, 2.10.15, 2.10.1	14.2.12.1.65
Feedwater Heater and Drain System	2.10.3	14.2.12.1.67
Extraction Steam System	2.10.12	14.2.12.1.68
Moisture Separator/Reheater	2.10.11	14.2.12.1.69
Main Turbine and Auxiliaries	2.10.7, 2.10.10, 2.10.9	14.2.12.1.70
Main Generator and Auxiliaries	2.10.16, 2.10.17, 2.10.18, 2.10.19, 2.10.20	14.2.12.1.71
Liquid and Solid Radwaste	2.9.1, 2.7.2, 2.15.13	14.2.12.1.75
Ultimate Heat Sink	4.1	14.2.12.1.77
Primary Containment and Masc. Systems	2.14.12.14.2, 2.14.5, 2.12.10	14.2.12.1.38, 14.2.12.1.39 14.2.12.1.40, 14.2.12.1.41, 14.2.12.1.42, 14.2.12.1.43
Service Building HVAC	2.15.5m	14.2.12.1.34
Turbine Building HVAC	2.15.5k	14.2.12.1.34
Radwaste Building HVAC	2.15.5l	14.2.12.1.34
Hot Water Heating System	2.11.16, 2.11.14	14.2.12.1.21
Combustion Turbine Generator	2.12.11	14.2.12.1.45
Safety Intake Building HVAC		14.2.12.1.34

Note 1: Containment Isolation valves will be tested per Tier 2 Subsection 14.2.12.1.37 and 14.2.2.1.41.
Note 2: Containment Penetrations will be tested per Tier 2 Subsection 14.2.12.1.38.

14.3 Tier 1 Selection Criteria and Processes

The information in this section of the reference ABWR DCD, including all subsections and tables, is incorporated by reference with the following site-specific supplements.

Information provided in Tables 14.3-1 through 14.3-10 is historical. It provides a summary of the review results used to identify design information that was included in the Tier 1 design descriptions for the ABWR systems. As such, this historical information is not updated. Any departures are identified in the referenced sections and in the Tier 1 material in Part 2 of the COLA, and are summarized in Part 7 of the COLA.

Supplemental material is provided in Section 14.3S addressing the criteria used to develop Inspections, Tests, Analyses, and Acceptance Criteria (ITAAC) for site-specific systems, emergency planning, and security in Part 9 of the COLA.

14.3S Inspections, Tests, Analyses and Acceptance Criteria (ITAAC)

The selection criteria and methodology provided in Section 14.3 of the reference ABWR DCD for the certified ABWR design were utilized as the site-specific selection criteria and methodology for inspections, tests, analyses, and acceptance criteria including those applicable to the emergency planning and physical security hardware. In general, the ITAAC for site-specific systems were developed to correspond to the interface criteria in Tier 1 of the reference ABWR DCD. For those site-specific systems that do not have a safety function sufficiently significant to meet the selection criteria for ITAAC, the system is identified with the designation “No entry for this system.”

The emergency planning ITAAC conform to the guidance provided in Sections C.I.14 and C.II.1 of Regulatory Guide 1.206, as modified to reflect the design and specific emergency planning program requirements.

The security ITAAC conform to the guidance in Appendix C.II.1-C of Regulatory Guide 1.206, as modified to reflect the design and site-specific security requirements.

15.0 Accident and Analysis

The information in this section of the reference ABWR DCD, including all subsections, tables, and figures, is incorporated by reference with the following supplements.

15.0.5 COL License Information

15.0.5.1 Anticipated Operational Occurrences (AOO)

The following site-specific supplement addresses COL License Information Item 15.1.

No departures are being taken from the fuel design licensing basis that is described in the reference ABWR DCD, including the core loading map used for response analysis in Figure 4.3-1 and the basic control strategy in Table 4A-1. Consequently, the analysis results of the events identified in Subsection 15.0.4.5 for initial core loading are provided in subsection 15.0.4.5 of the DCD.

15.0.5.2 Operating Limits

The following site-specific supplement addresses COL License Information Item 15.2.

No departures are being taken from the fuel design licensing basis that is described in the reference ABWR DCD, including the core loading map used for response analysis in Figure 4.3-1 and the basic control strategy in Table 4A-1. Consequently,the operating limits resulting from the analyses are provided in subsection 15.0.4 of the DCD.

15.0.5.3 Design Basis Accidents

The following site-specific supplement addresses COL License Information Item 15.3.

No departures are being taken from the fuel design licensing basis that is described in the reference ABWR DCD, including the core loading map used for response analysis in Figure 4.3-1 and the basic control strategy in Table 4A-1. Consequently, the results of the design basis accidents associated with the initial core, including radiological consequences, are provided in subsections 15.1 through 15.8 of the DCD.

15.1 Decrease in Reactor Coolant Temperature

The information in this section of the reference ABWR DCD, including all subsections, tables, and figures, is incorporated by reference with the following supplement.

15.1.2.3.2.2 Feedwater Controller Failure–Maximum Demand

The following site-specific supplement addresses the COL item in the reference ABWR DCD.

No departures are being taken from the fuel design licensing basis that is described in the reference ABWR DCD, including the core loading map used for response analysis in Figure 4.3-1 and the basic control strategy in Table 4A-1. Consequently, the analysis for the initial core is provided in subsection 15.1.2.3.2.2 of the DCD.

15.1S Transient and Accident Classification

As specified by Regulatory Guide 1.206 the design differences from the certified design that could impact the STP 3 & 4 transient and safety analysis must be identified. No departures impact the transient and accident analyses.

15.2 Increase in Reactor Pressure

The information in this section of the reference ABWR DCD, including all subsections, tables, and figures, is incorporated by reference with the following departures and supplements.

STD DEP T1 2.3-1

STD DEP 8.3-1

15.2.1.3.1 Inadvertent Closure of One Turbine Control Valve

The following site-specific supplement addresses the COL License Information Item the reference ABWR DCD.

No departures are being taken from the fuel design licensing basis that is described in the reference ABWR DCD, including the core loading map used for response analysis in Figure 4.3-1 and the basic control strategy in Table 4A-1. Consequently, the analysis for the initial core is provided in subsection 15.2.1.3.1 of the DCD.

15.2.2.3.2.3 Generator Load Rejection with Failure of All Bypass Valves

The following site-specific supplement addresses the COL License Information Item in the reference ABWR DCD.

No departures are being taken from the fuel design licensing basis that is described in the reference ABWR DCD, including the core loading map used for response analysis in Figure 4.3-1 and the basic control strategy in Table 4A-1. Consequently, the analysis for the initial core is provided in subsection 15.2.2.3.2.3 of the DCD.

15.2.4.1.1 Identification of Causes

STD DEP T1 2.3-1

Various steamline and nuclear system malfunctions, or operator actions, can initiate main steamline isolation valve (MSIV) closure. Examples are low steamline pressure, high steamline flow, ~~high steamline radiation,~~ low water level or manual action.

15.2.6.1.1 Identification of Causes

STD DEP 8.3-1

The non-emergency AC power to the station auxiliaries is provided by three unit auxiliary transformers. The unit auxiliary transformers are powered by the unit turbine/generator via a medium voltage generator breaker. ~~Each~~ Two of the *unit auxiliary ~~transformer~~* transformers *(UAT) ~~provides~~* provide *power to ~~three~~* two *electrical buses which provide* power to *the unit's auxiliary loads, including the reactor internal pumps (RIPs), as follows: UAT-A* and UAT-B each *~~provides~~* provide *power to a RIP MG* set *with 3 RIPs and* both UATs have *a separate bus* providing *~~powers~~* power *to 2 RIPs directly (i.e. no MG* set *)~~,UAT-B powers 2 RIPs directly (i.e., no MG), and UAT-C provides power to a RIP MG with 3 RIPs~~. Following a generator trip and during plant*

startup, the medium voltage generator breaker is open but the high voltage breaker at the switchyard remains closed to backfeed power from the normal preferred power grid to the unit auxiliary transformers.

15.2.10 COL License Information

15.2.10.1 Radiological Effects of MSIV Closures

The following site-specific supplement addresses COL License Information Item 15.4.

The STP site-specific Exclusion Area Boundary (EAB) long-term routine release (annual average) χ/Q is 1.5E-05 sec/m^3. This χ/Q value conservatively assumes no decay. ABWR DCD Table 15.2-12 provides MSIV closure doses as a function of χ/Q. The STP EAB doses associated with the inadvertent closure of MSIVs are provided below:

Dispersion sec/m^3	Thyroid mGy	W Body mGy	Beta mGy	Skin mGy
1.5E-05	4.5E-04	1.3E-02	2.0E-02	3.3E-02

15.3 Decrease in Reactor Coolant System Flow Rate

The information in this section of the reference ABWR DCD, including all subsections, tables, and figures, is incorporated by reference with no departures or supplements.

15.4 Reactivity and Power Distribution Anomalies

The information in this section of the reference ABWR DCD, including all subsections, tables, and figures, is incorporated by reference with the following departures and supplements.

STD DEP Admin

15.4.2.1 Features of the ABWR Automatic Thermal Limit Monitoring System (ATLM)

STD DEP Admin

In the ABWR, the Automatic Thermal Limit Monitoring (ATLM) System performs the rod block monitoring function. The ATLM System is a dual channel subsystem of the Rod Control and Information System (RCIS). In each ATLM channel there are two independent thermal limit monitoring devices. One device monitors the MCPR limit and protects the operating limit of the MCPR, and the other device monitors the APLHGR limit and protects the operating limit of the APLHGR. The rod block algorithm and setpoint of the ATLM System are based on actual online core thermal limit information. If any one of the two limits is reached, either due to control rod withdrawal or recirculation flow increase, control rod withdrawal permissive is removed. Detailed description of the ATLM System is presented in ~~Reference 15.4-1 and~~ Chapter 7.

15.4.5 Recirculation Flow Control Failure with Increasing Flow

15.4.5.2.1.3 Identification of Operator Actions

STD DEP Admin

Reactor pressure is controlled as required, depending on whether scram occurs and, if scram occurs, whether a restart or cooldown is planned. In general, following a scram, the corrective action is to hold reactor pressure and condenser vacuum for restart after the malfunction has been repaired. The following is the sequence of operator actions expected during the course of the event, assuming restart. The operator should:

(3) Switch the reactor mode switch to the ~~STARTUP~~ SHUTDOWN *position*

15.4.11 COL License Information

15.4.11.1 Mislocated Fuel Bundle Accident

The following site-specific supplement addresses COL License Information Item 15.5.

No departures are being taken from the fuel design licensing basis that is described in the reference ABWR DCD, including the core loading map used for response analysis in Figure 4.3-1 and the basic control strategy in Table 4A-1. Consequently, the analysis results of the fuel bundle mislocated event are based on NRC approved methods and are provided in subsection 15.4.7.3 of the DCD.

15.4.11.2 Misoriented Fuel Bundle Accident

The following site-specific supplement addresses COL License Information Item 15.6.

No departures are being taken from the fuel design licensing basis that is described in the reference ABWR DCD, including the core loading map used for response analysis in Figure 4.3-1 and the basic control strategy in Table 4A-1. Consequently, the analysis results of the fuel bundle misoriented event are based on NRC appoved methods and are provided in subsection 15.4.8.3 of the DCD.

15.5 Increase in Reactor Coolant Inventory

The information in this section of the reference ABWR DCD, including all subsections, tables, and figures, is incorporated by reference with no departures or supplements.

15.6 Decrease in Reactor Coolant Inventory

The information in this section of the reference ABWR DCD, including all subsections, tables, and figures, is incorporated by reference with the following departure and supplements.

STD DEP 15.6-1 (Table 15.6-18)

15.6.5S Site-Specific Design Basis Accident Doses

The following site-specific supplement addresses the differences between the reference ABWR DCD and plant specific χ/Q values.

Table 15.6.5S-1 provides a comparison between the site-specific short-term release (accident) χ/Q values and the reference ABWR DCD accident χ/Q values. The reference ABWR DCD EAB accident χ/Q values are in:

- Table 15.6-3 (Instrument Line Break Accident)
- Table 15.6-7 (Main Steamline Break Accident)
- Table 15.6-13 (Loss of Coolant Accident)
- Table 15.6-18 (Clean Up Water Line Break Accident)

The reference ABWR DCD LPZ accident χ/Q values are in Table 15.6-13. The reference ABWR DCD Control Room χ/Q values are in Table 15.6-14. The most conservative site-specific Control Room χ/Q values were taken from FSAR Section 2.3S.4, which correspond to a release from the Reactor Building plant stack at the Control Room air intake “B”. The EAB χ/Q values are for the most conservative time period (0-2 hours).

For all offsite values at all time intervals, the STP site-specific offsite χ/Q values are bounded by the reference ABWR DCD χ/Q values. Since the accident analysis source term is unchanged, the STP site-specific accident doses are bounded by the reference ABWR DCD accident doses for all the accidents in this FSAR section:

- Instrument Line Break Accident (Subsection 15.6.2.5.3)
- Main Steamline Break Accident (Subsection 15.6.4.5.1.3)
- Loss of Coolant Accident (Subsection 15.6.5.5.4)
- Clean Up Water Line Break Accident (Subsection 15.6.6.5.2.3)

For the onsite Control Room χ/Q values, the STP site-specific χ/Q values exceed the reference ABWR DCD χ/Q values for a Turbine Building release for one time interval and for the Reactor Building release for one time interval. For the turbine building at the 4-30 day time interval, the reference ABWR DCD χ/Q value is exceeded by 7.27%. For the Reactor Building at the 4-30 day time interval, the reference ABWR DCD χ/Q value is exceeded by 9.18%. Because the DCD χ/Qs in these instances are not

bounded by site-specific values, the Control Room site specific radiological consequence analysis is performed.The results for doses are shown in Table 15.6.5S-2. The Control Room doses remain well within the regulatory limits.

15.6.7 COL License Information

15.6.7.1 Iodine Removal Credit

The following site-specific supplement addresses COL License Information Item 15.7.

The design characteristics of the main steamlines, drain lines, and main condenser are the same as specified in the reference ABWR DCD. As a result, the parameters in Table 15.6-8, Items II.D (MSIV leakage) and II.E (condenser data) remain unchanged. Since the iodine credit is a function of these parameters, the STP 3 & 4 iodine removal credit does not deviate from the reference ABWR DCD.

Table 15.6.5S-1 Site-Specific χ/Q

Receptor Location	STP Site-Specific χ/Q (s/m^3)	ABWR DCD χ/Q (s/m^3)
EAB	2.74E-04	1.37E-03
LPZ		
0-8 hours	2.45E-05	1.56E-04
8-24 hours	1.67E-05	9.61E-05
1-4 days	7.57E-06	3.36E-05
4-30 days	2.59E-06	7.42E-06
Control Room (Reactor Building Release)		
0-8 hours	2.03E-03*	3.10E-03
8-24 hours	5.88E-04	1.83E-03
1-4 days	6.29E-04	1.16E-03
4-30 days	5.59E-04	5.12E-04
Control Room (Turbine Building Release)		
0-8 hours	4.44E-04**	5.17E-04
8-24 hours	1.84E-04	3.05E-04
1-4 days	1.18E-04	1.93E-04
4-30 days	9.15E-05	8.53E-05

Notes:

* The ABWR DCD provides 0-8 hour χ/Q values. This STP site-specific value is the ARCON96 calculated 0-2 hour χ/Q value.

** This STP site-specific value is the 0-8 hour χ/Q value determined from the 0-2 and 2-8 hour ARCON96 calculated values per NUREG/CR-6331, Section 3.7.

Table 15.6.5S-2 Site Specific Control Room Dose for the LOCA

Time	Thyroid (Sv)	Whole Body (Sv)	Beta (Sv)
0-8 h	2.37E-02	3.63E-03	3.43E-02
0-24 h	3.64E-02	5.54E-03	6.46E-02
0-4 days	8.65E-02	1.09E-02	1.63E-01
0-30 days	2.04E-01	1.80E-02	3.02E-01

Table 15.6-18 Clean Up Water Line Break Meteorology* and Dose Results

Meteorology(s/m^3)	Thyroid Dose (Sv)	Whole Body Dose (Sv)
2.29E-02	3.0E-1	2.8E-3
1.37E-03	~~1.7E-4~~ 1.8E-2	1.7E-4
1.18E-03	~~1.5E-4~~ 1.5E-2	1.5E-4
2.19E-04	~~2.7E-5~~ 2.8E-3	2.7E-5

* Meteorology calculated using Regulatory Guide 1.145 for a ground level 1.0 m/s, F Stability. “Max” = maximum meteorology to meet 10% of 10CFR100 limits.

15.7 Radioactive Release from Subsystems and Components

The information in this section of the reference ABWR DCD, including all subsections, figures and tables, is incorporated by reference with the following departure and supplements.

STD DEP T1 2.15-1

STD DEP 11.3-1 (Figure 15.7-2)

15.7.1.1 Basis and Assumptions

STD DEP 11.3-1

The ABWR offgas system is detailed in Subsection 11.3. The system is designed to be both detonation and seismic resistant and meets all criteria of Regulatory Guide 1.143. As such the failure of a single active component leading to a direct release of radioactive gases to the environment is highly unlikely. Therefore, inadvertent operator action with bypass of the delay charcoal beds is analyzed for compliance to ESTB 11-5. A top level diagram of the ABWR offgas system can be found in Figure 11.3-1 (see also Figure 15.7- 2) which shows that the ABWR charcoal beds consists of ~~nine~~five charcoal tanks.The first or guard tank contains 4,721 kg of charcoal followed by ~~a flow split into four lines, each line of which leads through 2 massive tanks~~four tanks each containing ~~12~~27,200 kg of charcoal. Bypass valves exists to direct flow around the (1) guard tank, (2) four series of follow-on tanks or (3) all tanks. To bypass either pathway (1) or (2) above requires the operator to enter a computer command with a required permissive. To bypass all tanks (pathway (3)) requires the operator to key in the command with two separate permissives. Since pathway (3) would require both inadvertent operation upon the operator (keying in the wrong command) plus getting two specific permissives for three incorrect decisions, it is not assumed that pathway (3) is likely to occur. Redundant upon human decision making and downstream of the charcoal beds and the post charcoal bed particle filter shown in Figure 11.3-1 are a series of two redundant radiation monitoring instruments and an air operated isolation valve which will alarm the control room and automatically shut off all flow from the offgas system for radioactivity levels in excess of environmental limits which are defined by 10CFR20 as not greater than $2x10^{-2}$m Sv/h at the site boundary. Therefore, bypass of the charcoal beds during periods with significant radioactive flow through the offgas system will be limited and/or automatically terminated by actuation of the downstream sensors.

To evaluate the potential radiological consequences of an inadvertent bypass of the charcoal beds, it was assumed that operator error or computer error has led to the bypass of the ~~eight~~ four follow-on beds in addition to the failure of the automated air operated downstream isolation valve. It is also assumed that during this period, the plant is running at and continues to run at the maximum permissible offgas rate of 14.8 GBq/s (based upon the assumption of 0.0037 GBq/s/MWt as stipulated in Standard Review Plan 11.3) evaluated to a decay time of 30 minutes from the vessel exit nozzle. Even with the failure of the downstream isolation valve, it is not anticipated or assumed that the isolation instrumentation would fail but would instead

alarm the control room with a high radiation alarm causing the operator to manually isolate the offgas system (i.e., close suction valves) within 30 minutes of the alarm. Therefore, this analysis differs from the branch technical position on the following points:

(1) Flow is through a single 4,721 kg charcoal tank with an evaluated hold up time given by NUREG-0016, equation 1.5.1.6 using K_d's for Kr and Xe from NUREG-0016.

(2) An isolation valve prevents flow through the ~~*There is no motive force to remove any significant inventory from the eight*~~ *follow-on charcoal tanks while in bypass and therefore no activity from these tanks is included in the final release calculations.*

15.7.3.1 Identification of Cause and Frequency Classification

STD DEP T1 2.15-1

The ABWR Radwaste Building is ~~*a Seismic Category I structure*~~ *designed* ~~*to withstand all credible seismic events*~~ in accordance with the requirements of Regulatory Guide 1.143. *In addition, all compartments containing liquid radwastes are steel-lined up to a height capable of containing the release of all the liquid radwastes into the compartment. Because of these design capabilities, it is considered remote that any major accident involving the release of liquid radwastes into these volumes would result in the release of these liquids to the environment via the liquid pathway. Releases as a result of major cracks would instead result in the release of the liquid radwastes to the compartment and then to the building sump system for containment in other tanks or emergency tanks. A complete description of the Liquid Radwaste System is found Section 11.2, except for the tank inventories, which are found in Section 12.2.*

15.7.6 COL License Information

15.7.6.1 Radiological Consequences of Non-Line Break Accidents

The following site-specific supplements address COL License Information Item 15.9.

Radwaste System Failure Accident (Liquid Radwaste Tank Accident)

The STP 3 & 4 site-specific Exclusion Area Boundary (EAB) short-term release (accident) χ/Q is 2.74E-04 sec/m^3. Table 15.7-7 of the reference ABWR DCD provides radwaste system failure EAB doses as a function of χ/Q. The STP 3 & 4 thyroid and whole body doses associated with a radwaste system failure are a fraction of the10 CFR 100 criteria and are provided below:

Meteorology (sec/m^3)	Distance (m)	Thyroid Dose (Sv)	Whole Body Dose (Sv)
2.74E-04	EAB	**5.8 E-02**	**4.8E-05**

Fuel Handling Accident

Table 15.7-11 of the reference ABWR DCD provides fuel handling accident (FHA) EAB doses as a function of χ/Q. The STP 3 & 4 thyroid and whole body doses associated with a FHA are within the guidelines of 10 CFR 100 criteria and are provided below:

Meteorology (sec/m^3)	Distance (m)	Thyroid Dose (Sv)	Whole Body Dose (Sv)
2.74E-04	EAB	**1.5E-01**	**2.5E-03**

Fuel Cask Drop Accident

Table 15.7-14 of the reference ABWR DCD provides fuel cask drop accident EAB doses as a function of χ/Q. The STP 3 & 4 thyroid and whole body doses associated with a fuel cask drop accident are within the guidelines of 10 CFR 100 criteria and are provided below:

Meteorology (sec/m^3)	Distance (m)	Thyroid Dose (Sv)	Whole Body Dose (Sv)
2.74E-04	EAB	**1.1E-02**	**2.0E-05**

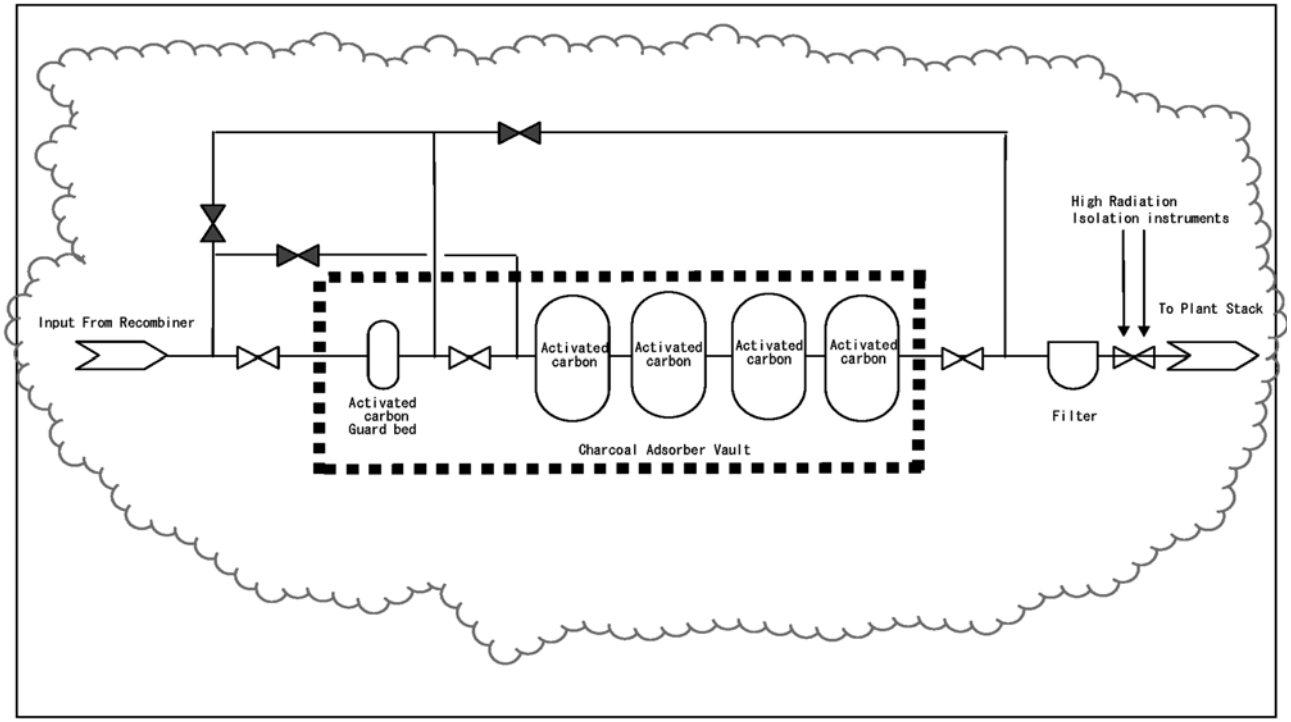

Figure 15.7-2 Offgas System (See Subsection 11.3)

15.8 Anticipated Transients Without Scram

The information in this section of the reference ABWR DCD, including all subsections, is incorporated by reference with no departures or supplements.

15A Plant Nuclear Safety Operational Analysis (NSOA)

The information in this appendix of the reference ABWR DCD, including all subsections, tables, and figures, is incorporated by reference with the following departures.

STD DEP Admin (Figures 15A-13, 17, 19, 21, 25, 27, 29, 37, 38, 39, 40, 48, 51, 52, 53, 63, 64, 67, 68, 69, and 70)

STD DEP T1 2.14-1 (Figure 15A-7)

15A.6.2.3.11 Control Rod Worth Control

STD DEP Admin

Any time the reactor is not shut down and is generating less than 20% *power (State D), a limit is imposed on the control rod pattern to assure that control rod worth is maintained within the envelope of conditions considered by the analysis of the ~~control rod drop accident~~* rod withdrawal error *(1-4).*

15A.6.3.1 General

STD DEP Admin

The safety requirements and protection sequences for moderate frequency incidents (anticipated operational transients) are described in the following subsections for Events 7 through ~~22~~ 23, 26, 27, 38-40, 44, 45, 48, and 49*. The protection sequence block diagrams show the sequence of frontline safety systems (Figures 15A-12 through 15A-27). The auxiliaries for the frontline safety systems are presented in the auxiliary diagrams (Figures 15A-6 and 15A-7) and the commonality of auxiliary diagrams (Figures 15A-65 through 15A-70).*

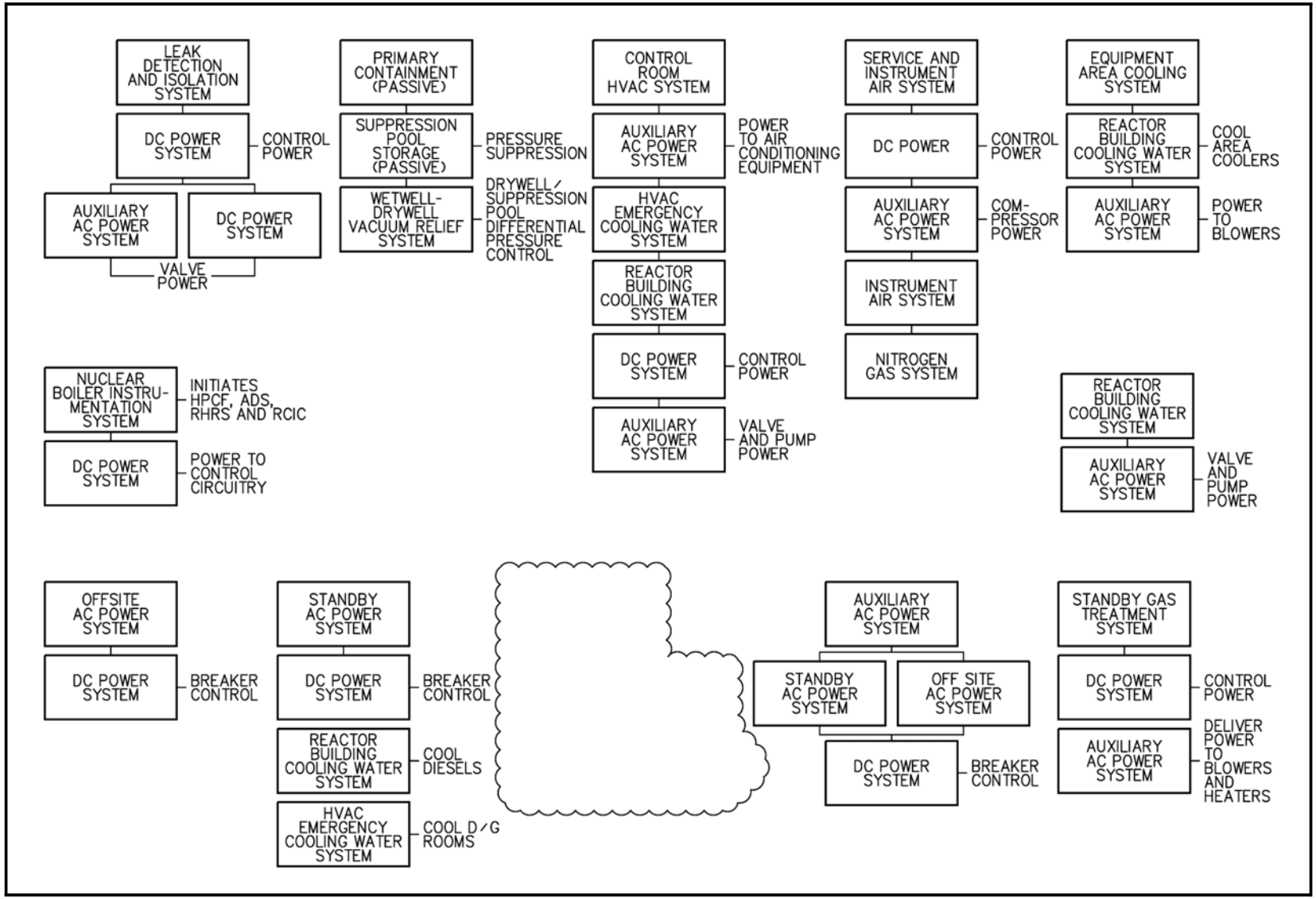

Figure 15A-7 Safety System Auxiliaries—Group 2

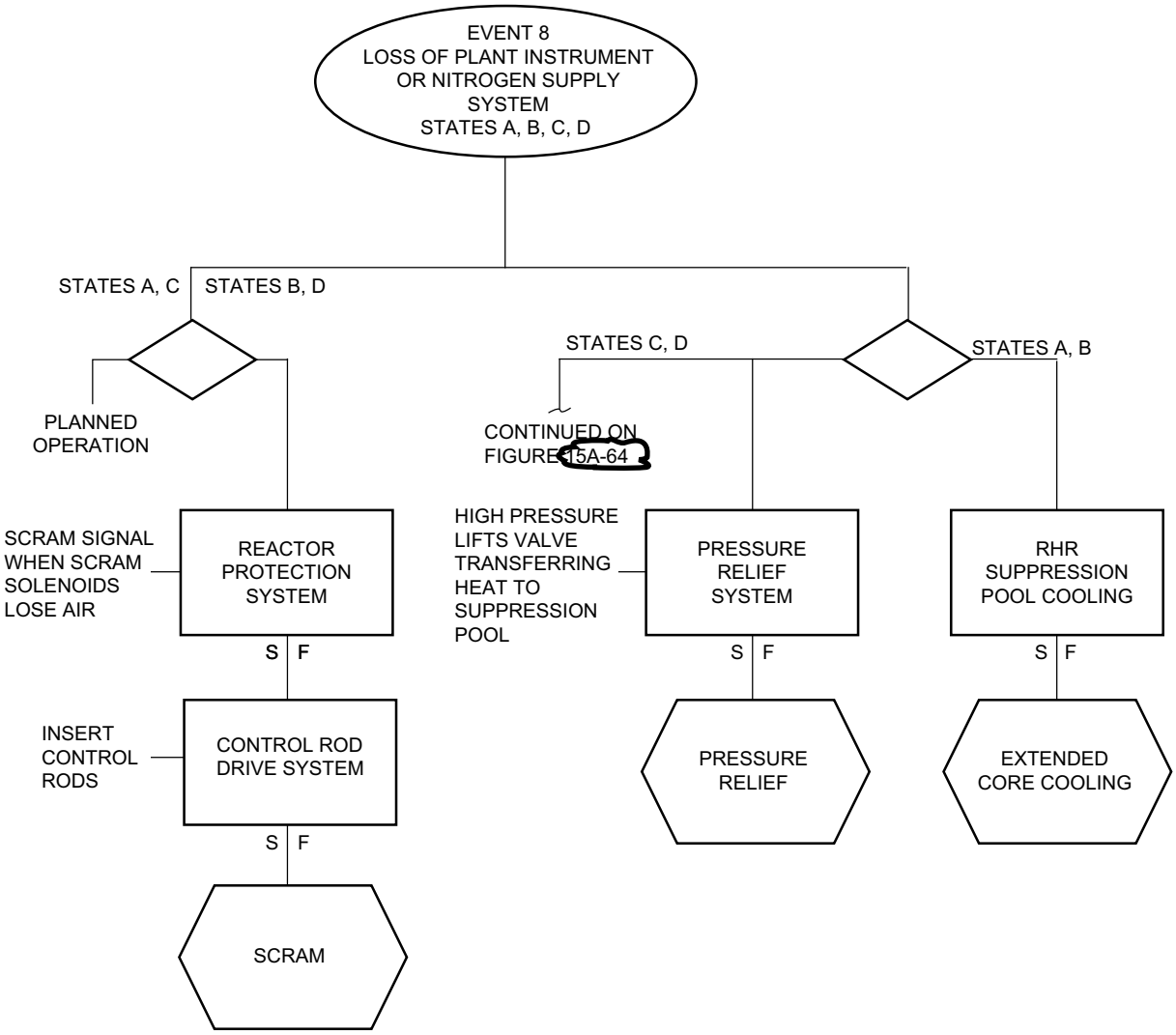

Figure 15A-13 Protection Sequence for Loss of Plant Instrument or Service Air System

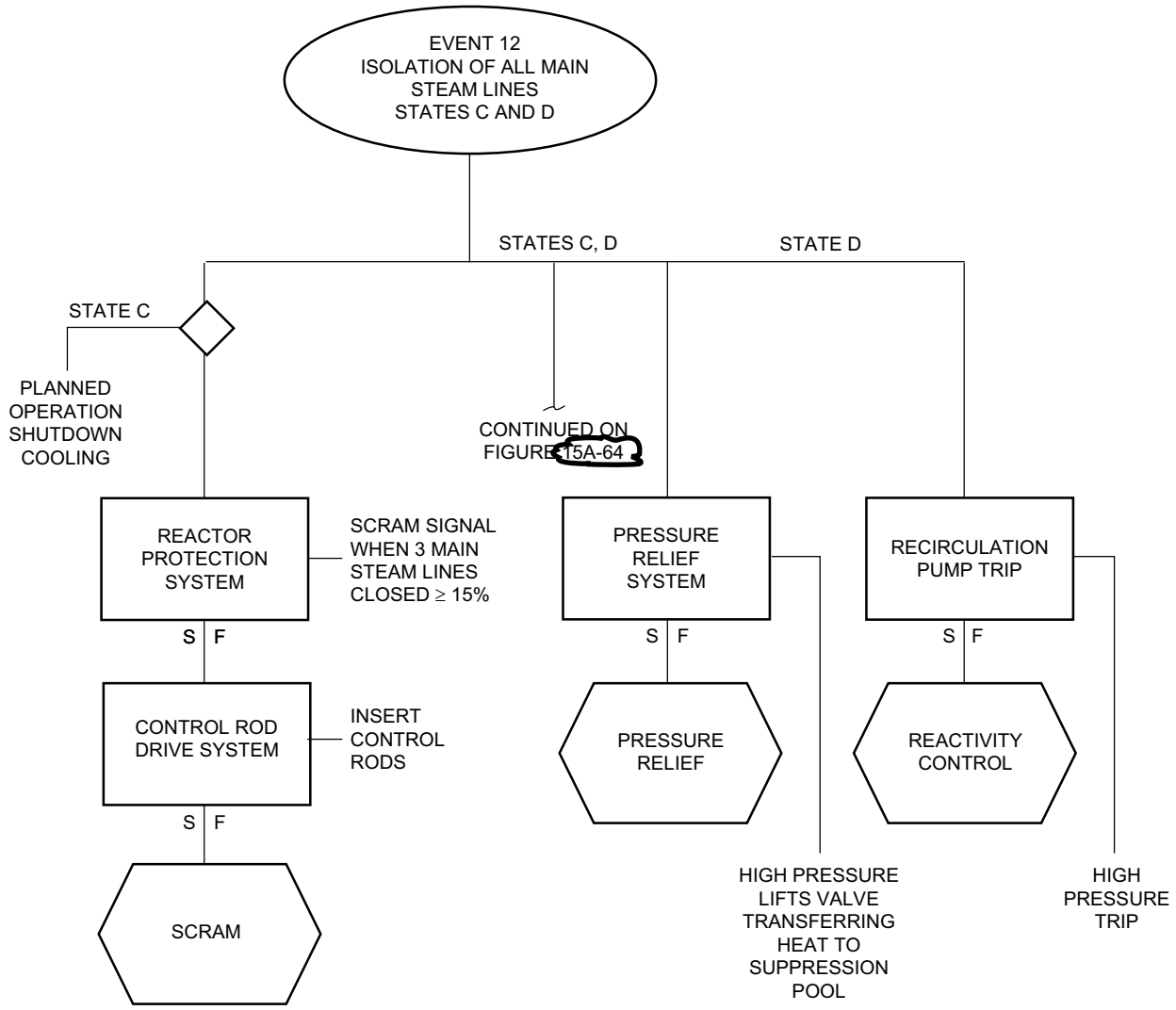

Figure 15A-17 Protection Sequences for Isolation of All Main Steamlines

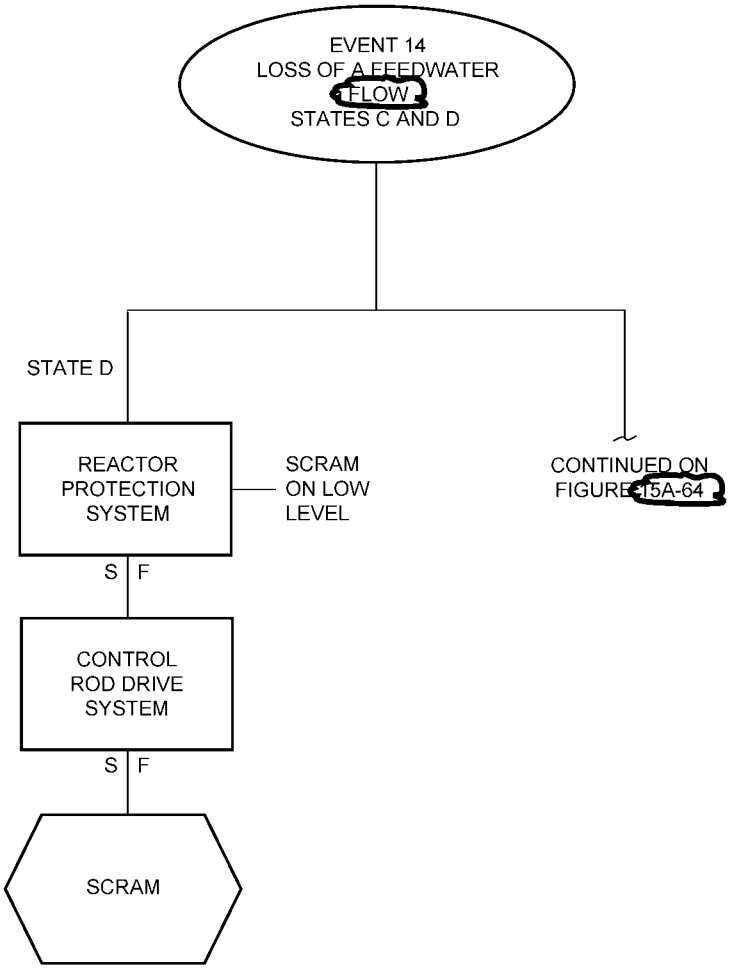

Figure 15A-19 Protection Sequence for Loss of All Feedwater Flow

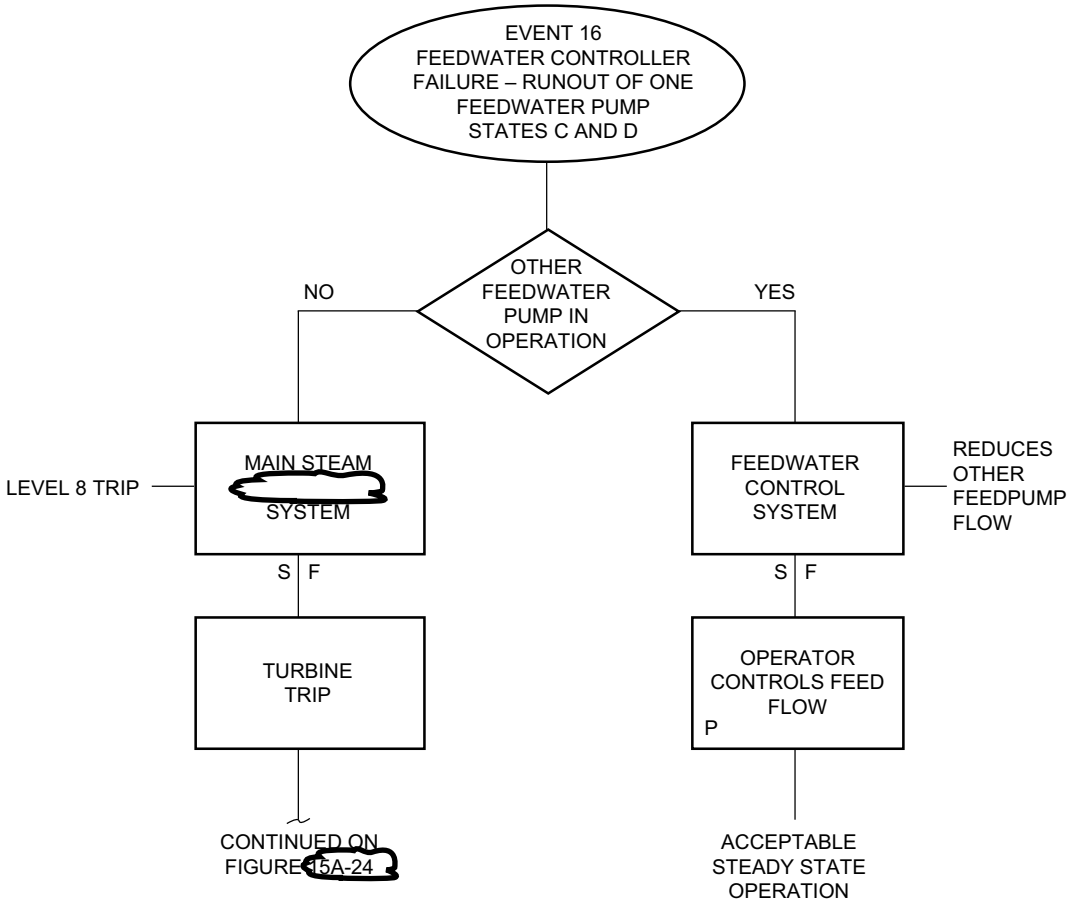

Figure 15A-21 Protection Sequence for Feedwater Controller Failure—Runout of One Feedwater Pump

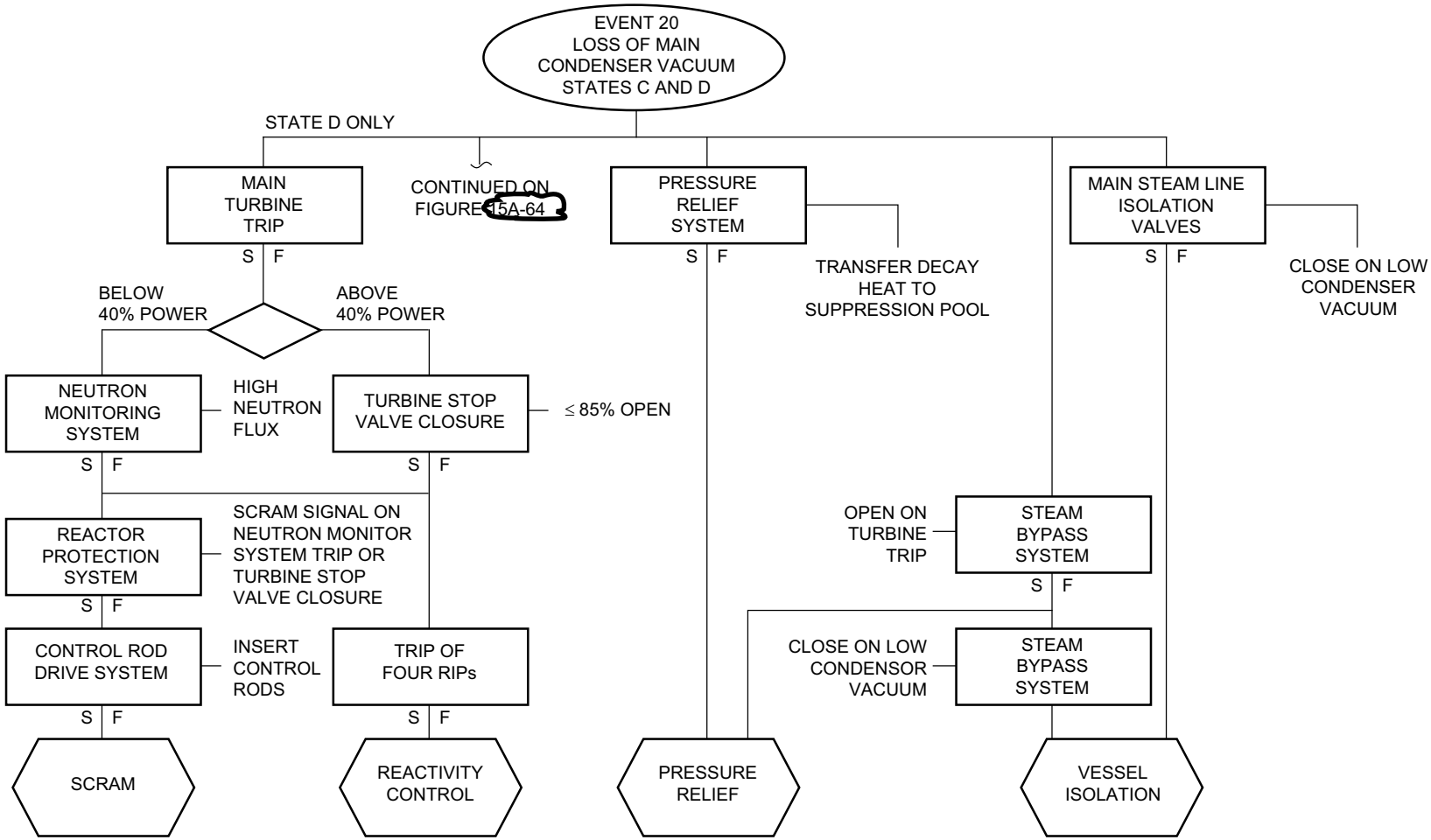

Figure 15A-25 Protection Sequences for Loss of Main Condenser Vacuum

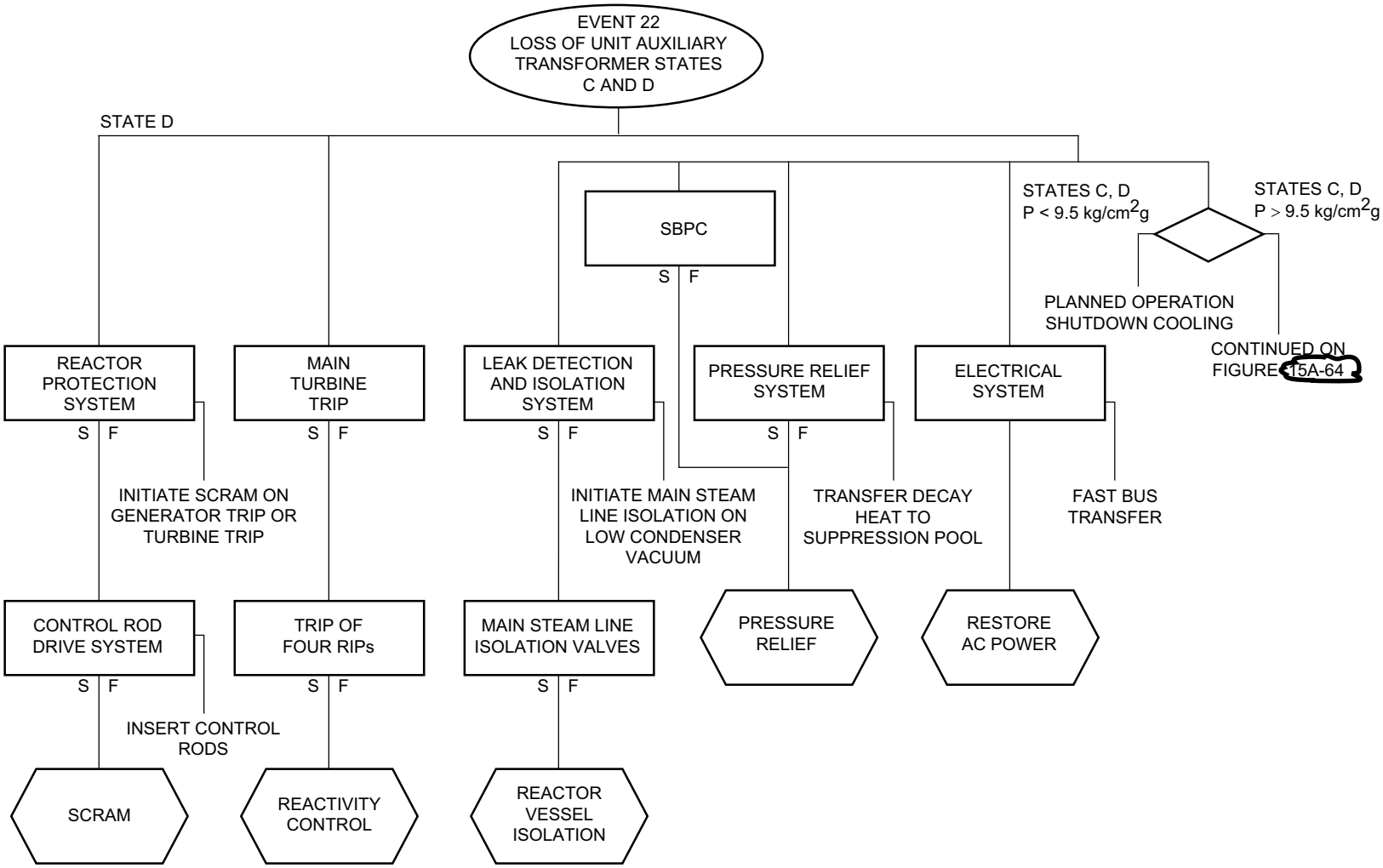

Figure 15A-27 Protection Sequence for Loss of Normal AC Power—Auxiliary Transformer Failure

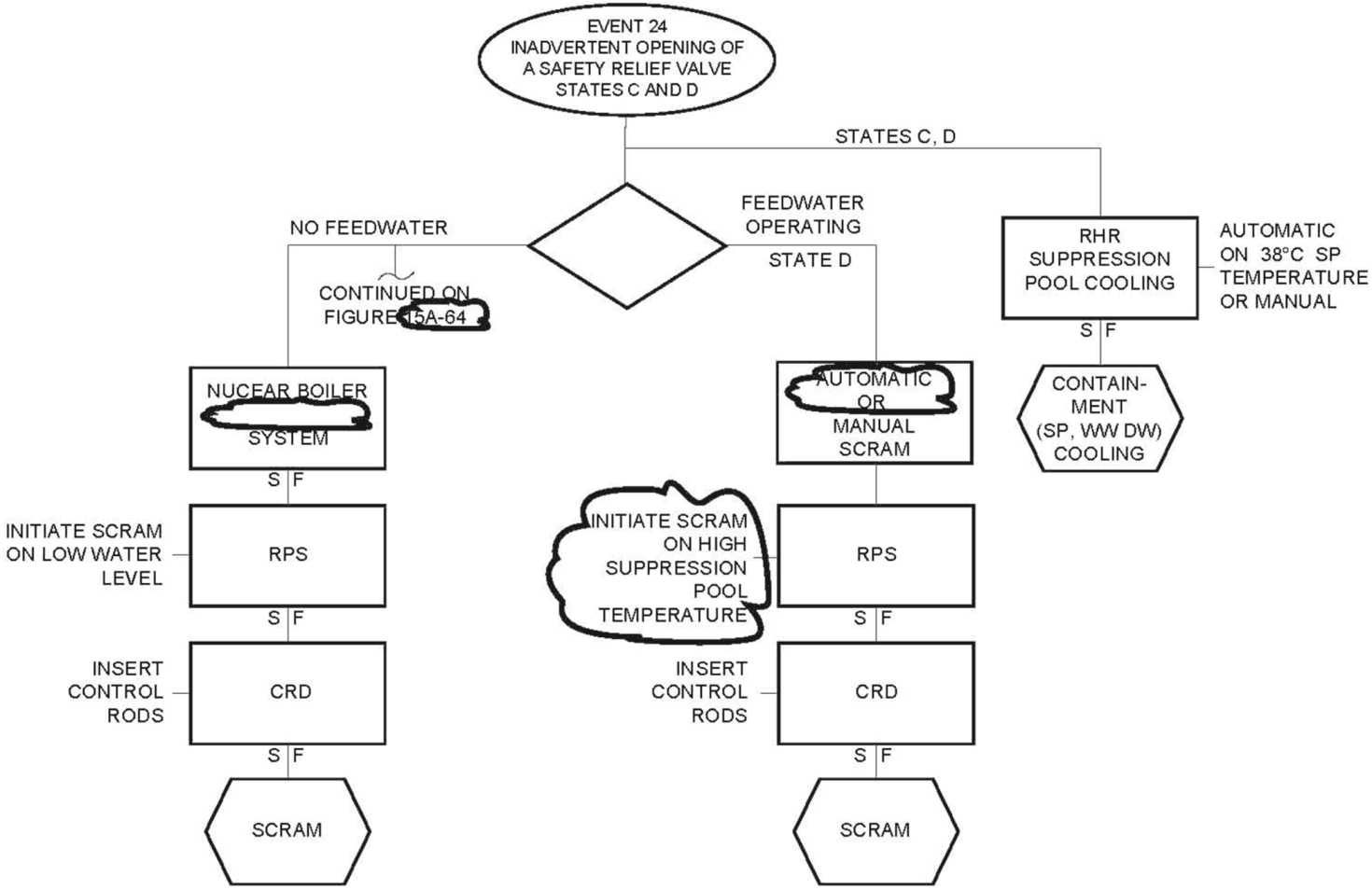

Figure 15A-29 Protection Sequences for Inadvertent Opening of a Safety Relief Valve

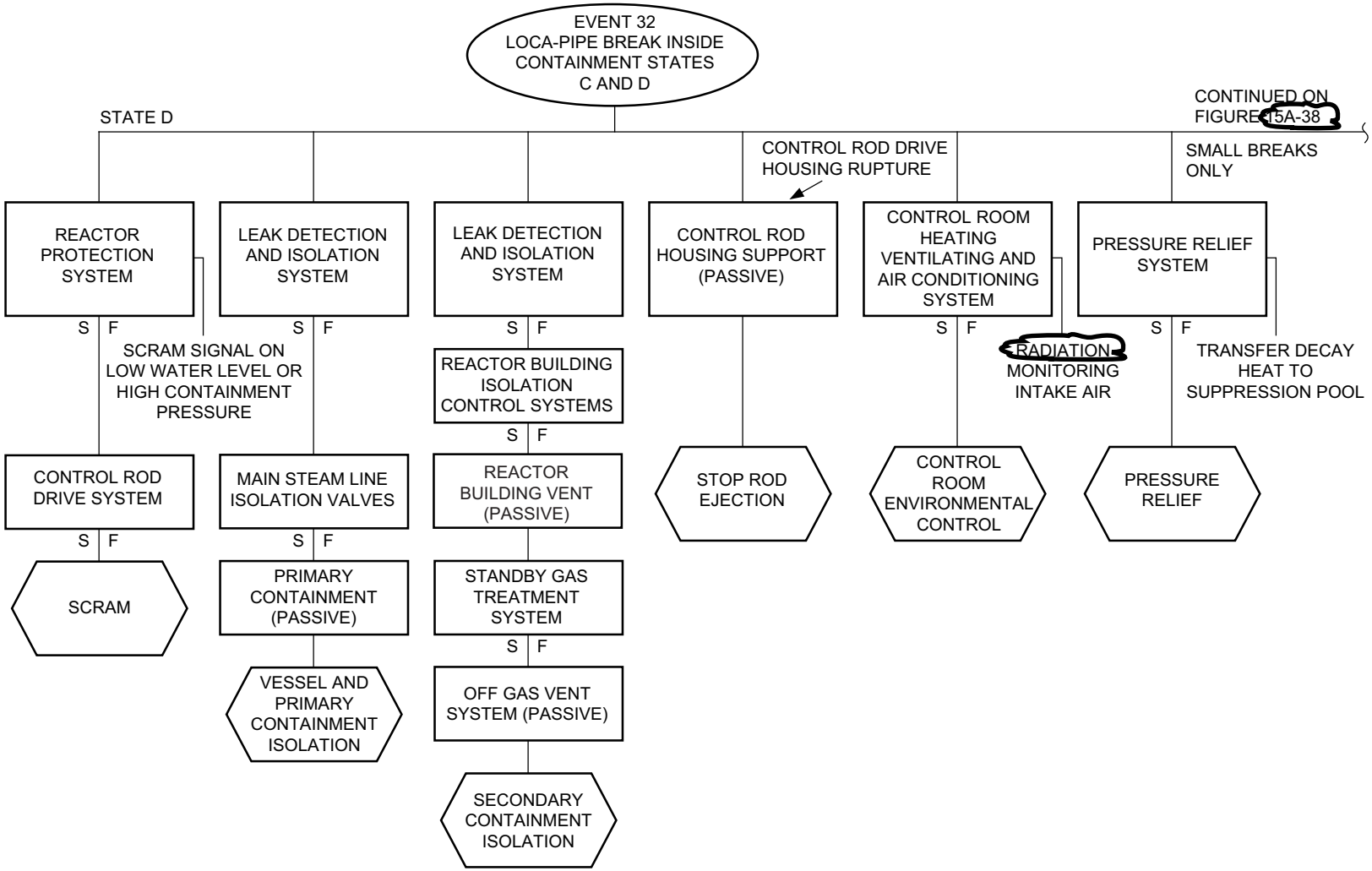

Figure 15A-37 Protection Sequences for Loss of Coolant Piping Breaks in RCPB—Inside Containment

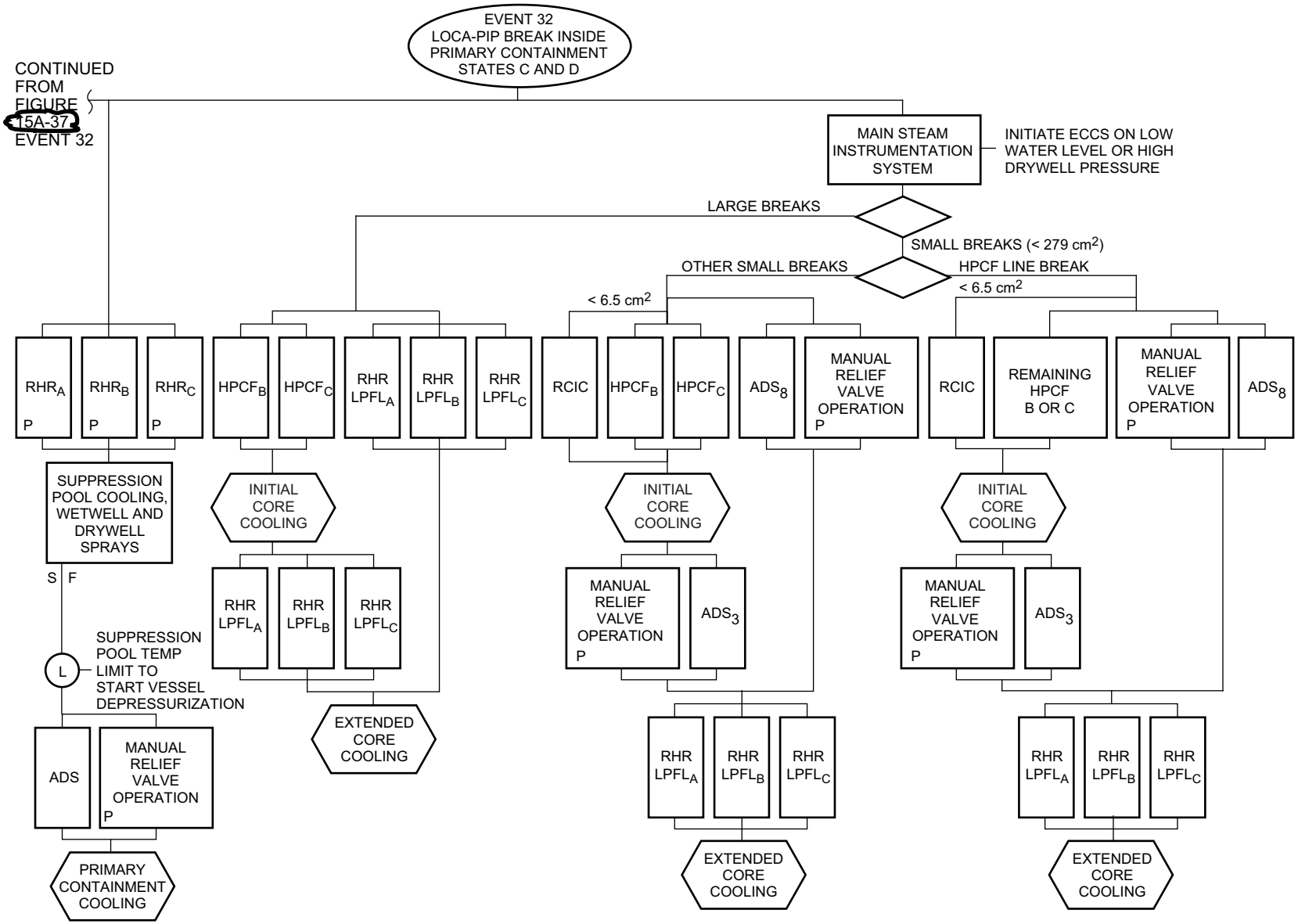

Figure 15A-38 Protection Sequence for Loss of Coolant Piping Breaks in RCPB – Inside Primary Containment

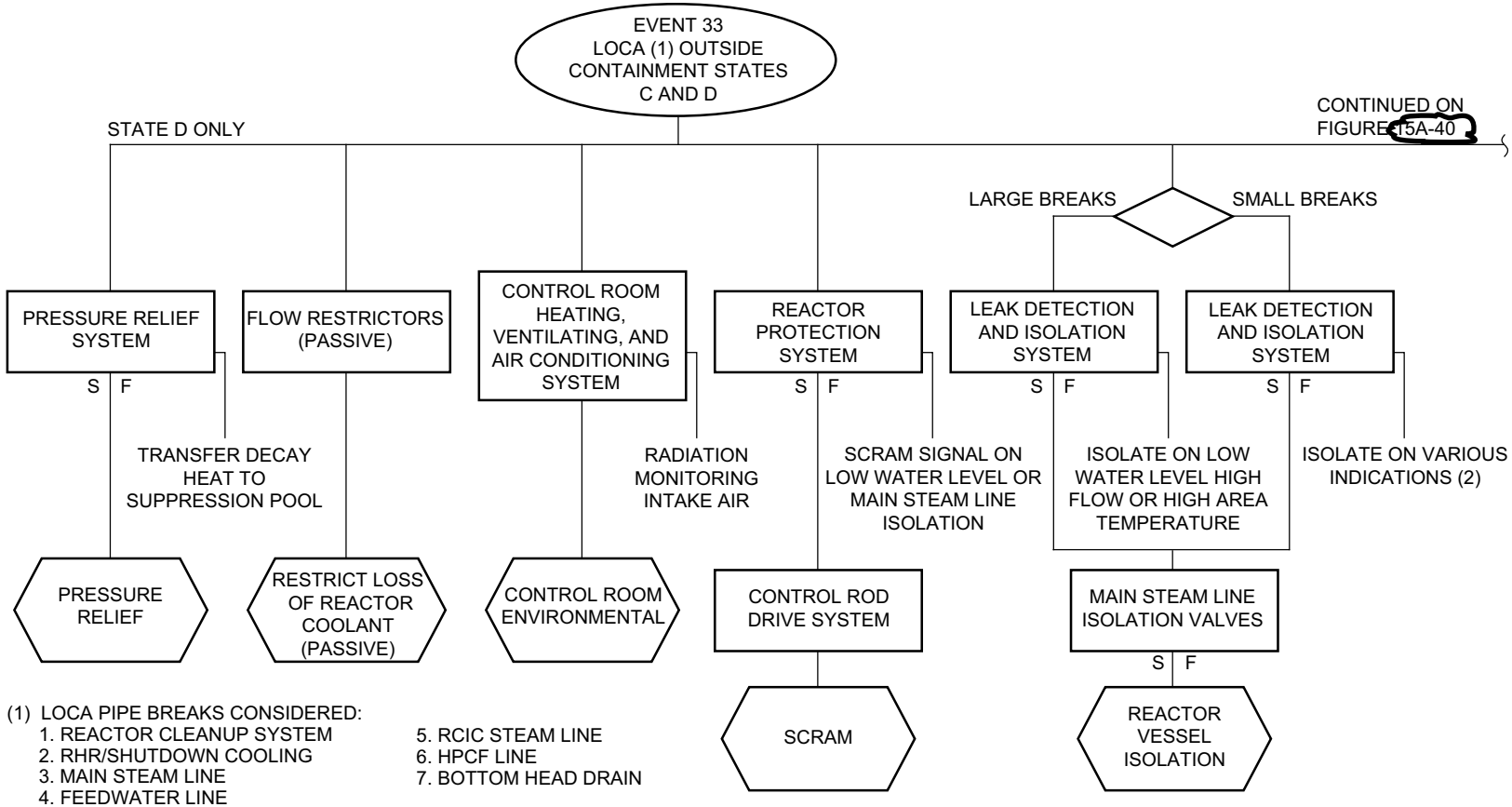

(1) LOCA PIPE BREAKS CONSIDERED:
1. REACTOR CLEANUP SYSTEM
2. RHR/SHUTDOWN COOLING
3. MAIN STEAM LINE
4. FEEDWATER LINE
5. RCIC STEAM LINE
6. HPCF LINE
7. BOTTOM HEAD DRAIN

(2) VARIOUS INDICATIONS:
1. FEED SIGNALS TO PUMPS
2. FEED TEMPERATURE
3. SPACE TEMPERATURE
4. FLOW INDICATIONS
5. REACTOR VESSEL WATER FLOW
6. FEEDWATER FLOW
7. HOT WELL LEVEL
8. VISUAL INSPECTION
9. LEAKAGE INDICATIONS

Figure 15A-39 Protection Sequences for Liquid and Steam, Large and Small Piping Breaks Outside Containment

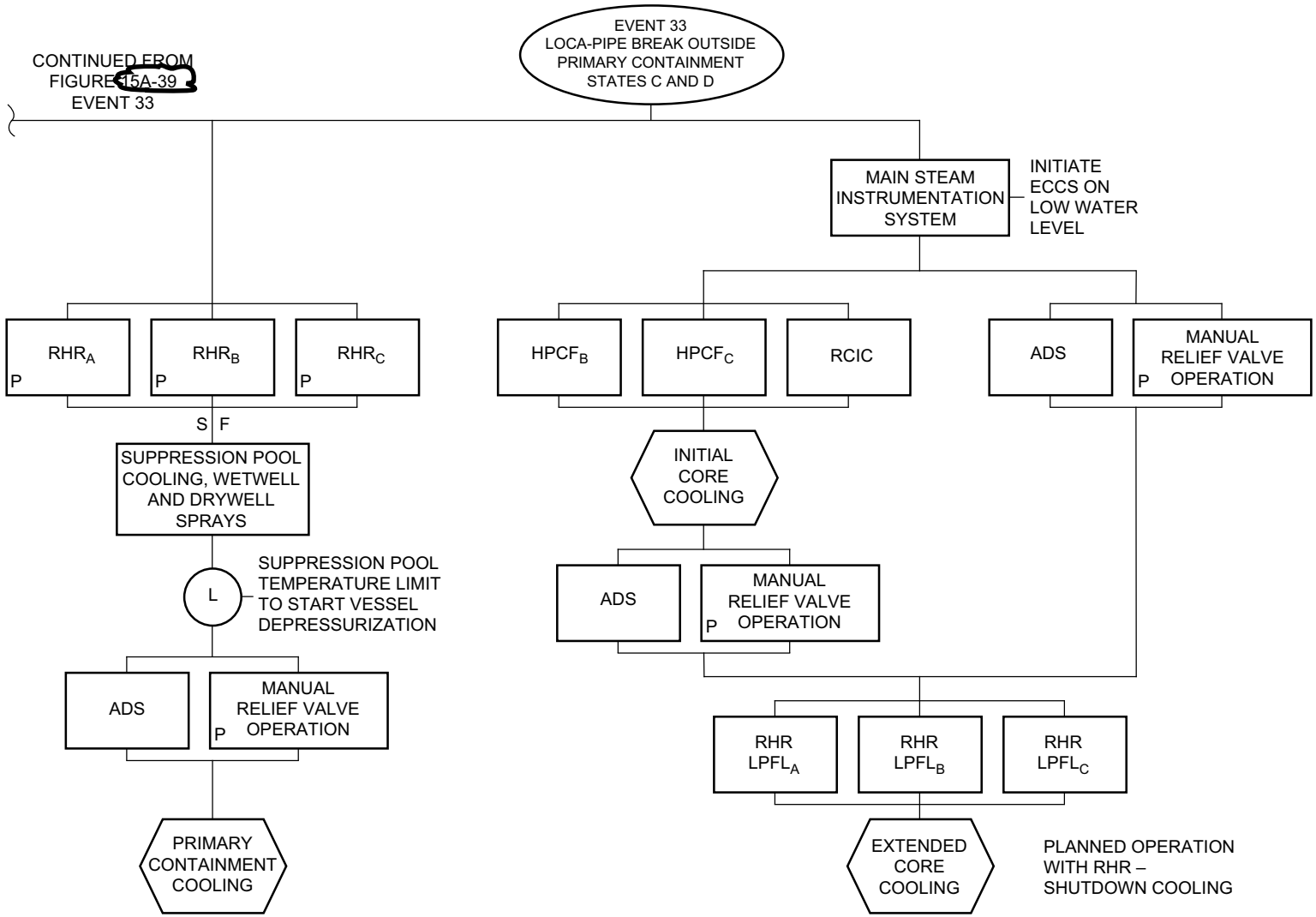

Figure 15A-40 Protection Sequence for Liquid and Steam, Large and Small Piping Breaks Outside Primary Containment

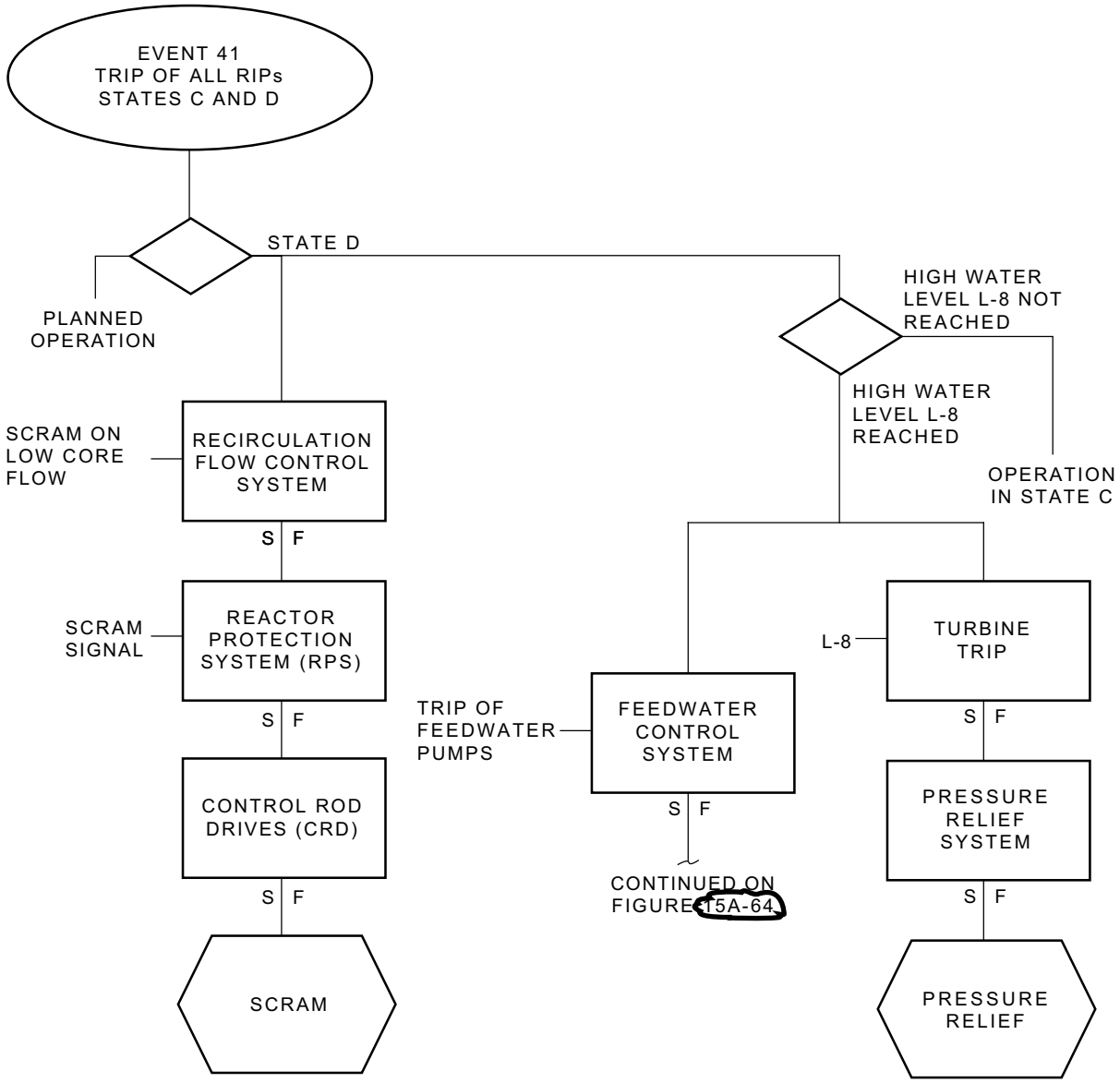

Figure 15A-48 Protection Sequence for Trip of All Reactor Internal Pumps (RIPs)

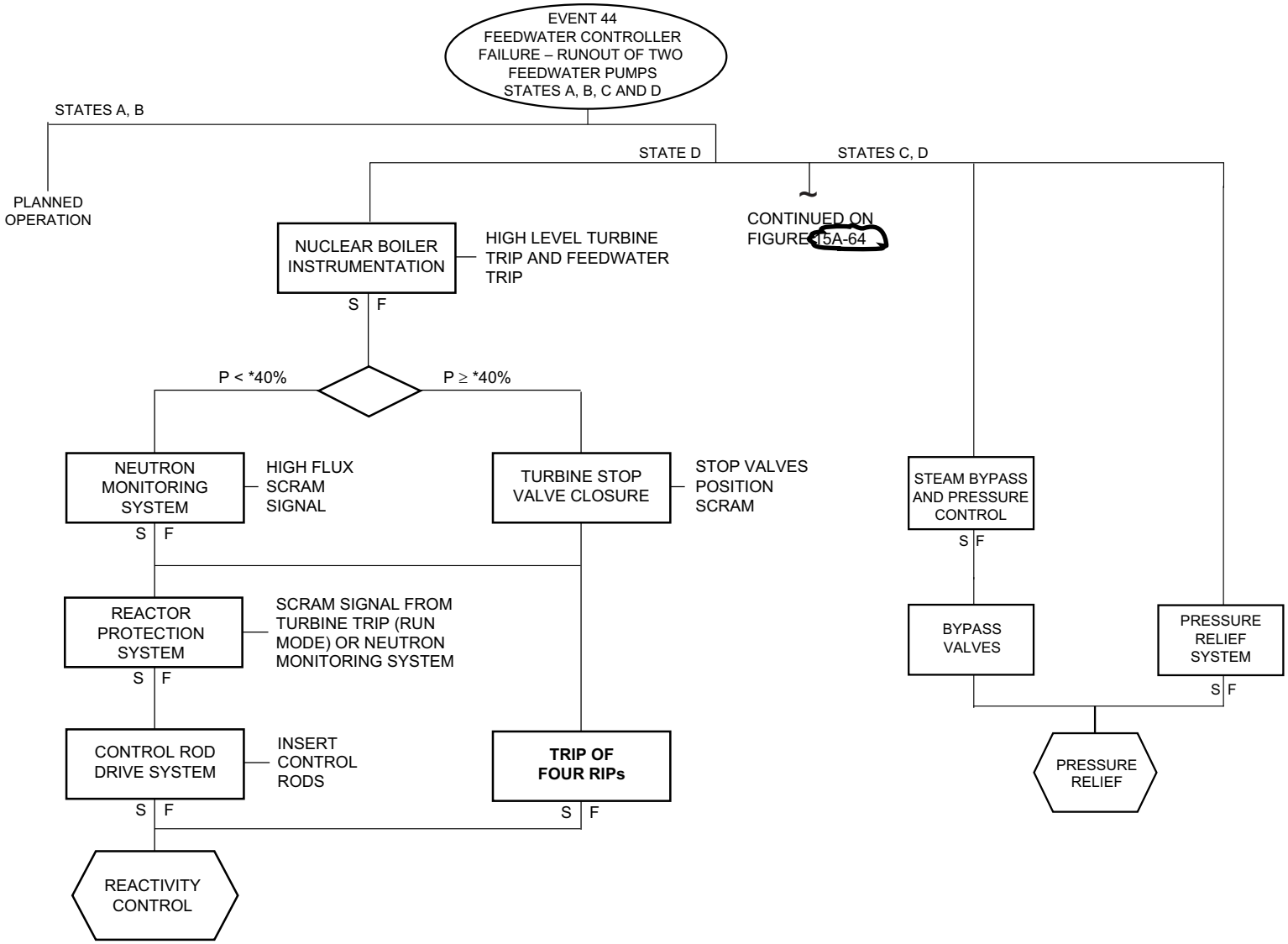

Figure 15A-51 Protection Sequences for Feedwater Controller Failure—Runout of Two Feedwater Pumps

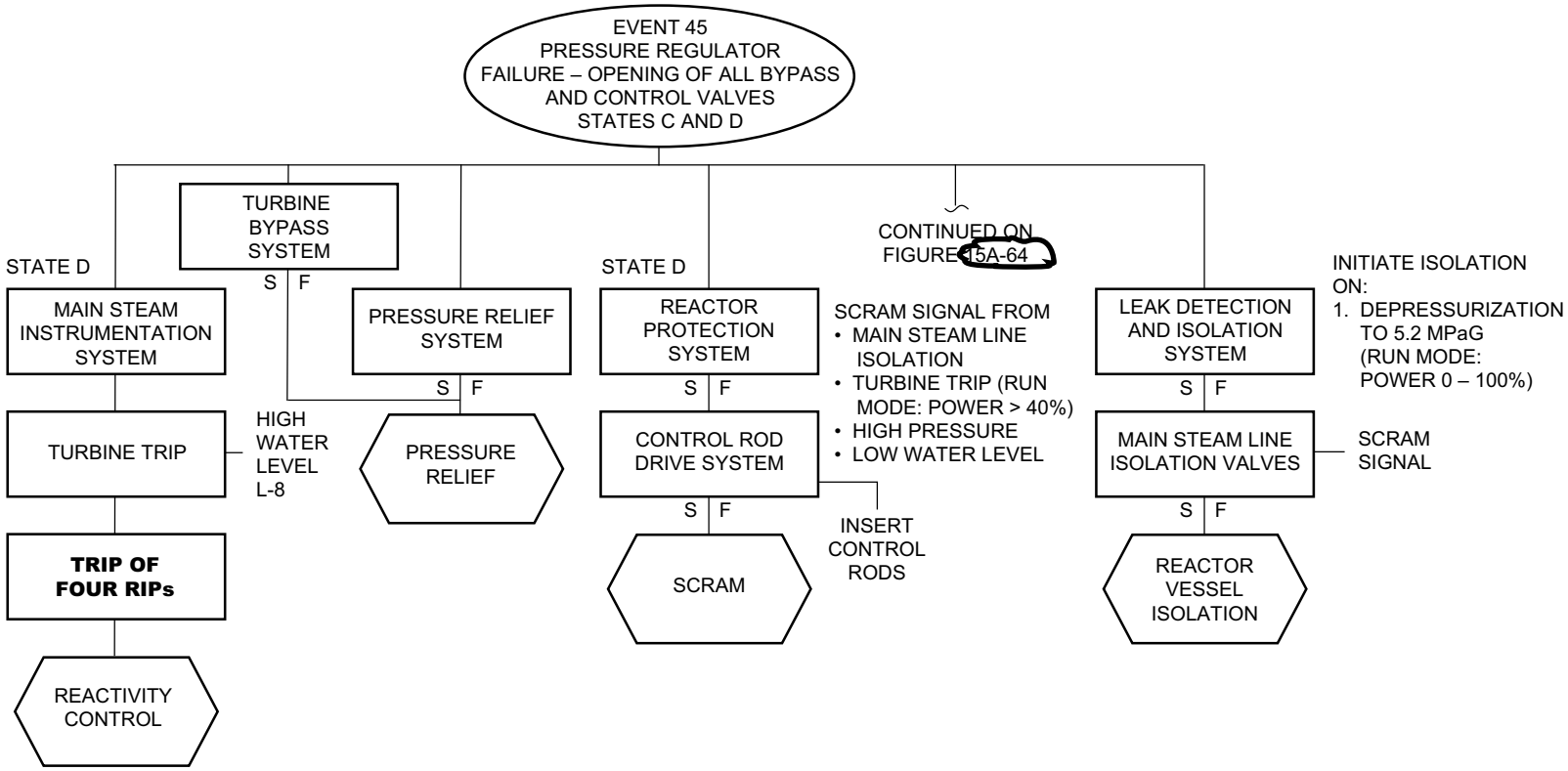

Figure 15A-52 Protection Sequences for Pressure Regulator Failure—Opening of All Bypass and Control Valves

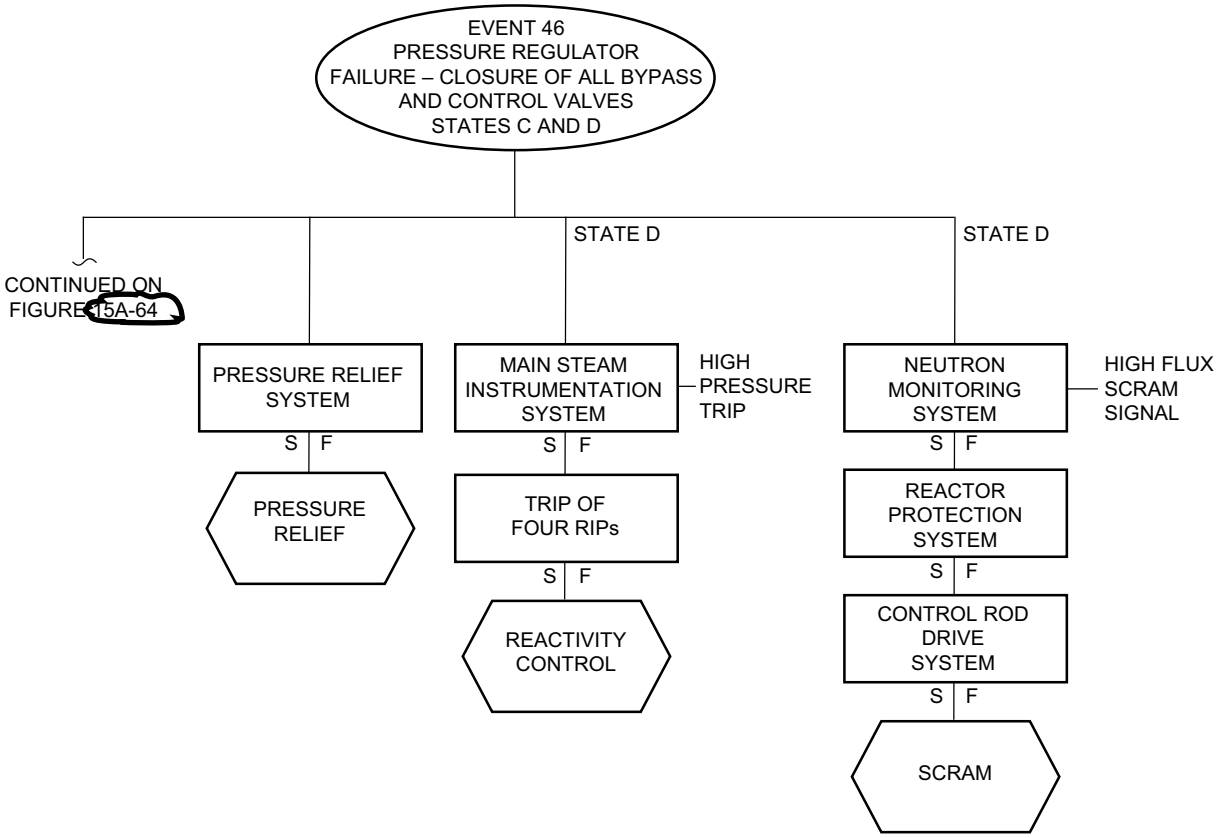

Figure 15A-53 Pressure Regulator Failure—Closure of All Bypass Valves and Control Valves

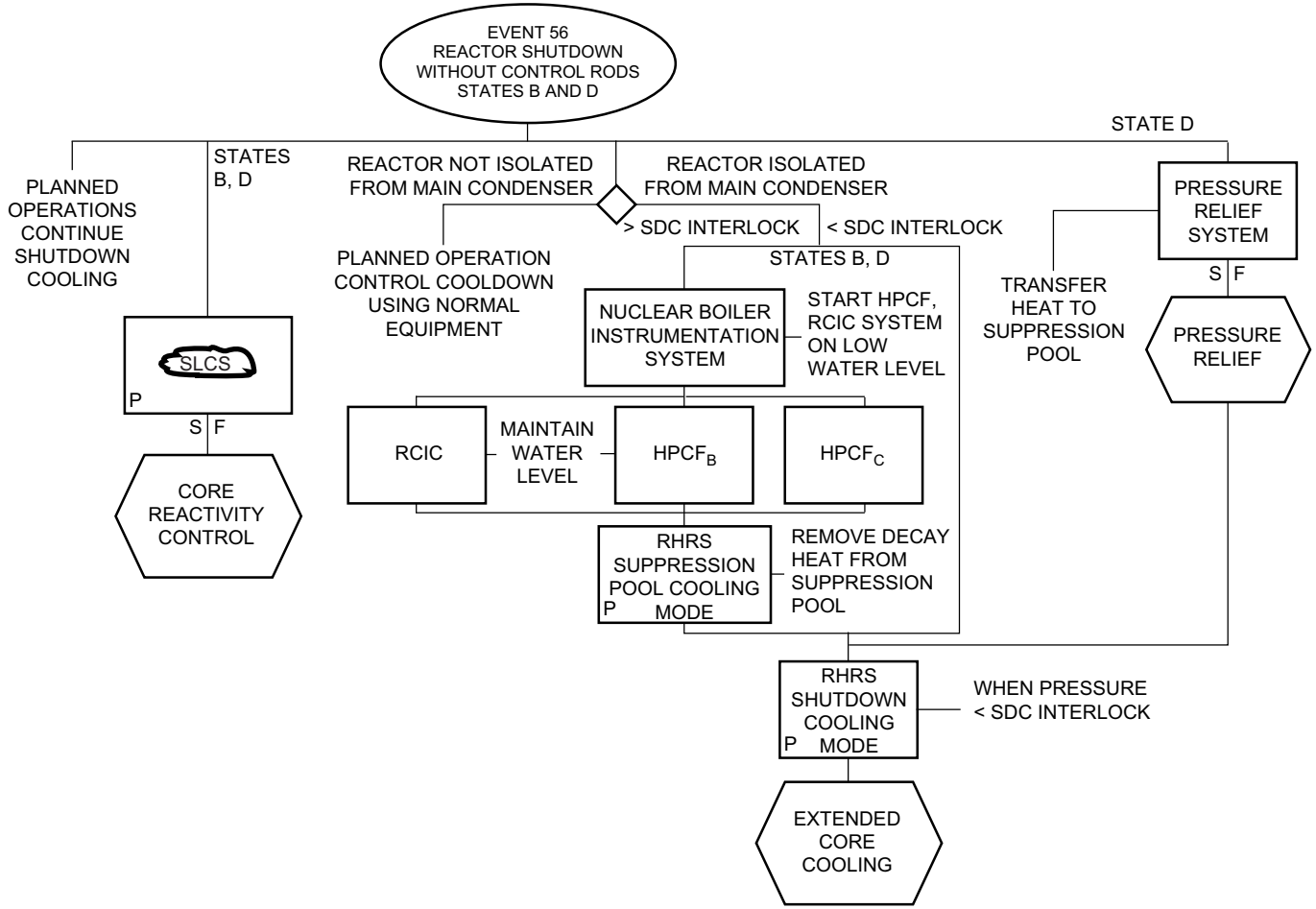

Figure 15A-63 Protection Sequence for Reactor Shutdown—Without Control Rods

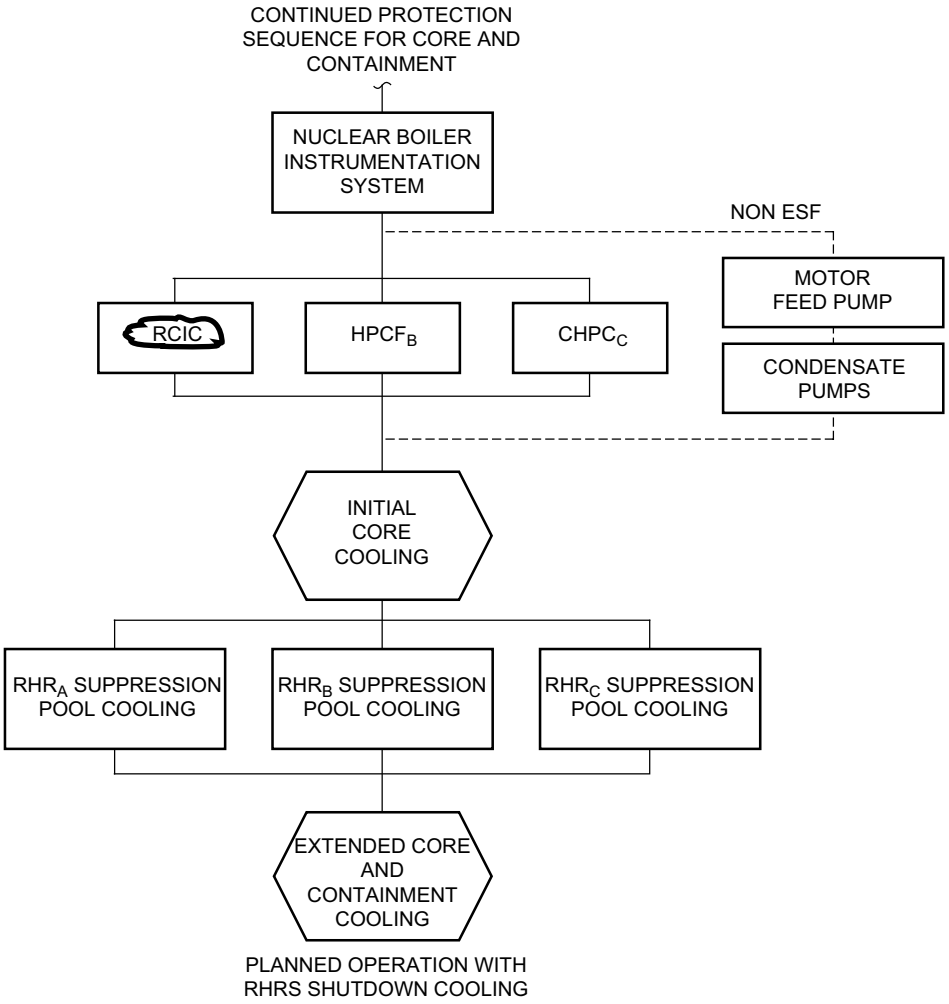

Figure 15A-64 Protection Sequence for Core and Containment Cooling for Loss of Feedwater and Vessel Isolations

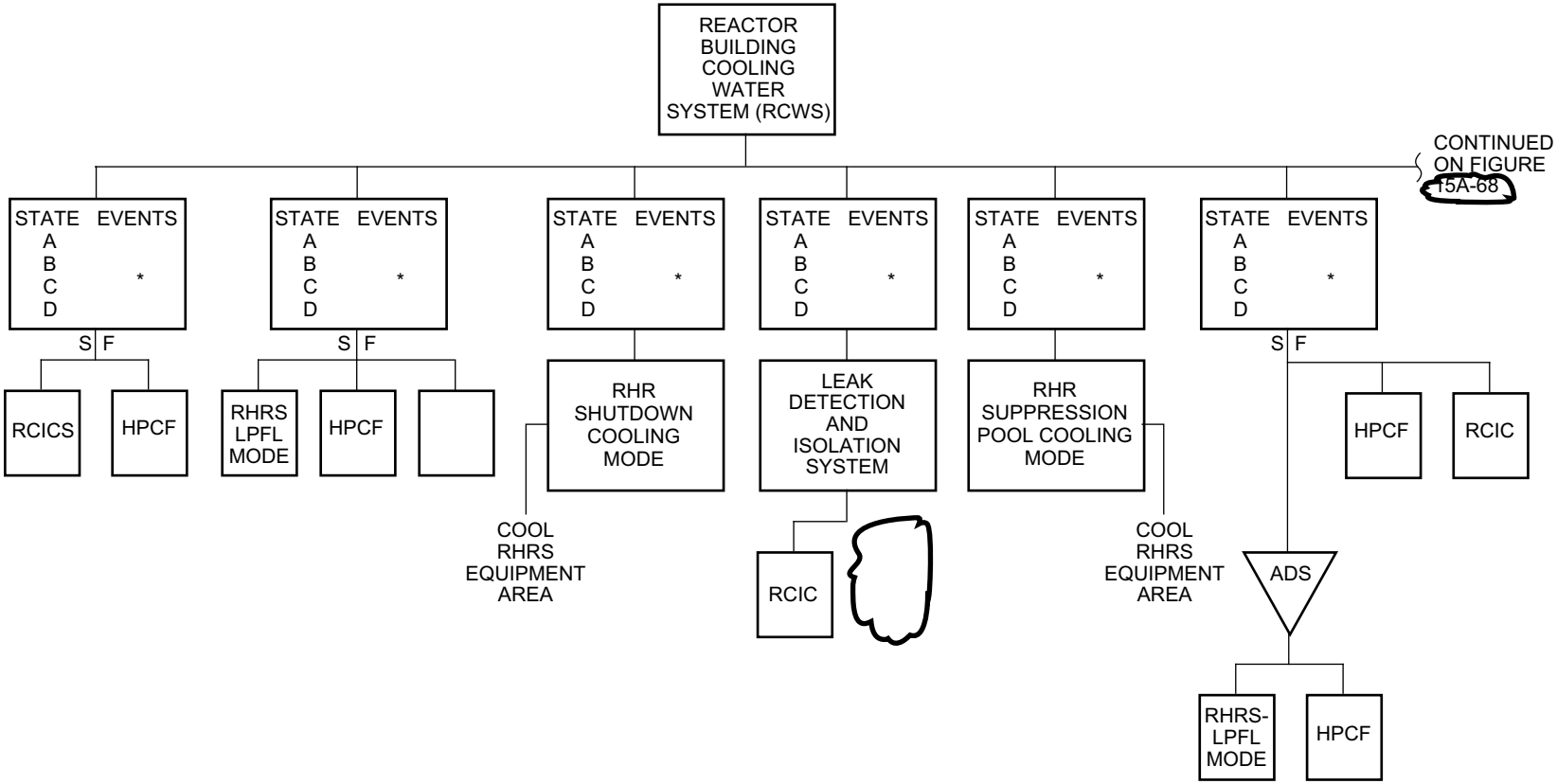

* APPLICABLE EVENTS (TABLES 15A-2 THROUGH 15A-5)
NOTE: SF REQUIREMENT NOT APPLICABLE IN EVENTS 54, 55 AND 56

Figure 15A-67 Commonality of Auxiliary Systems—Reactor Building Cooling Water System (RCWS)

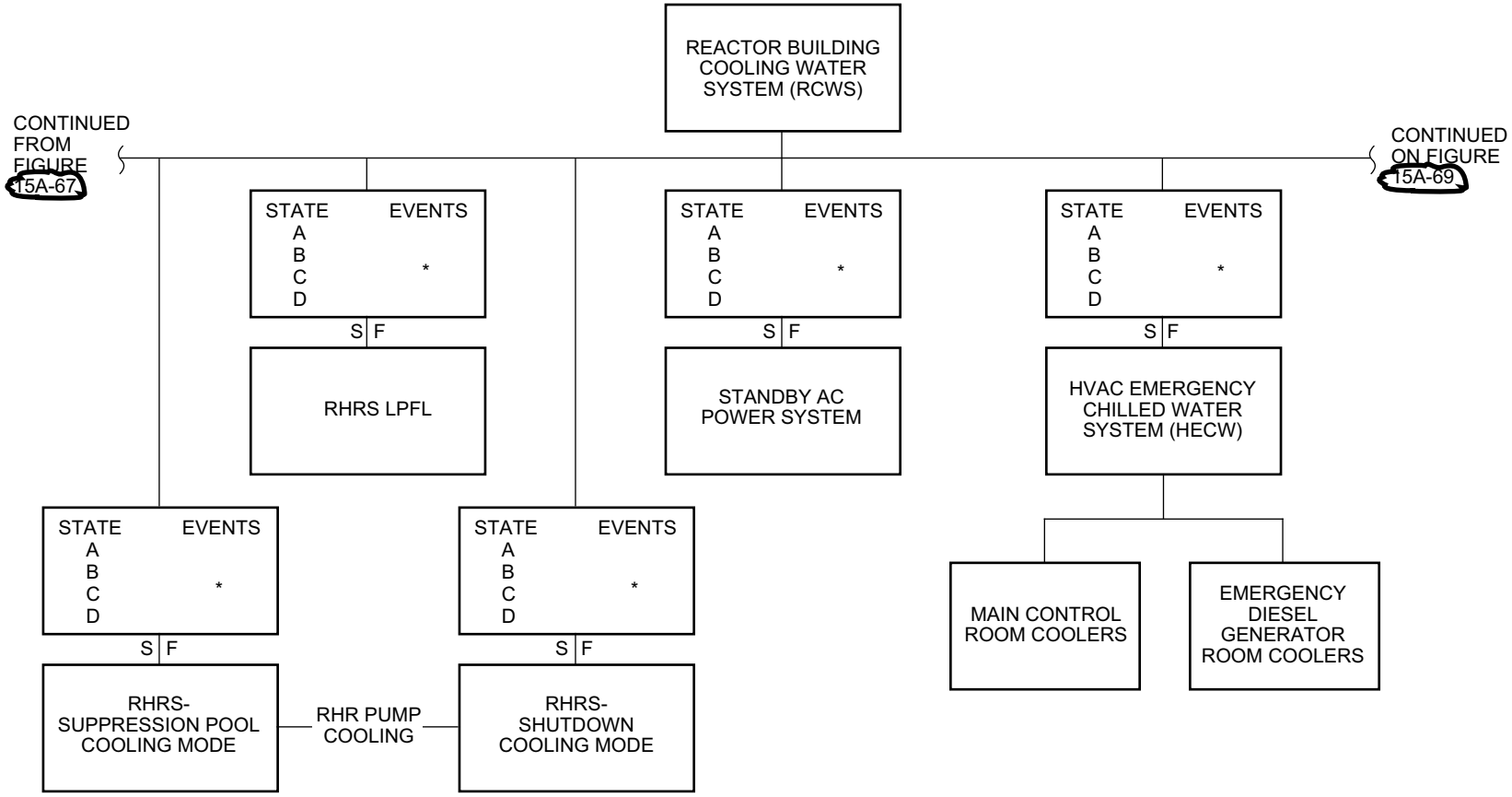

* APPLICABLE EVENTS (TABLES 15A-2 THROUGH 15A-5)
NOTE: SF REQUIREMENT NOT APPLICABLE IN EVENTS 54, 55 AND 56

Figure 15A-68 Commonality of Auxiliary Systems—Reactor Building Cooling Water System (RCWS) (Continued)

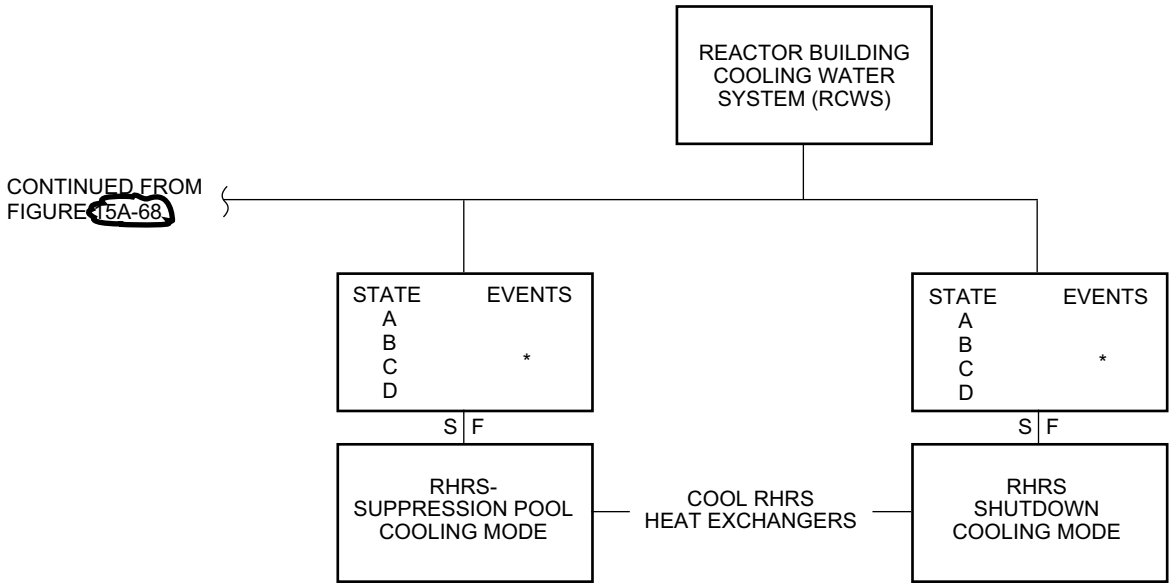

* APPLICABLE EVENTS (TABLES 15A-2 THROUGH 15A-5)
NOTE: SF REQUIREMENT NOT APPLICABLE IN EVENTS 54, 55 AND 56

Figure 15A-69 Commonality of Auxiliary Systems—Reactor Building Cooling Water System (RCWS) (Continued)

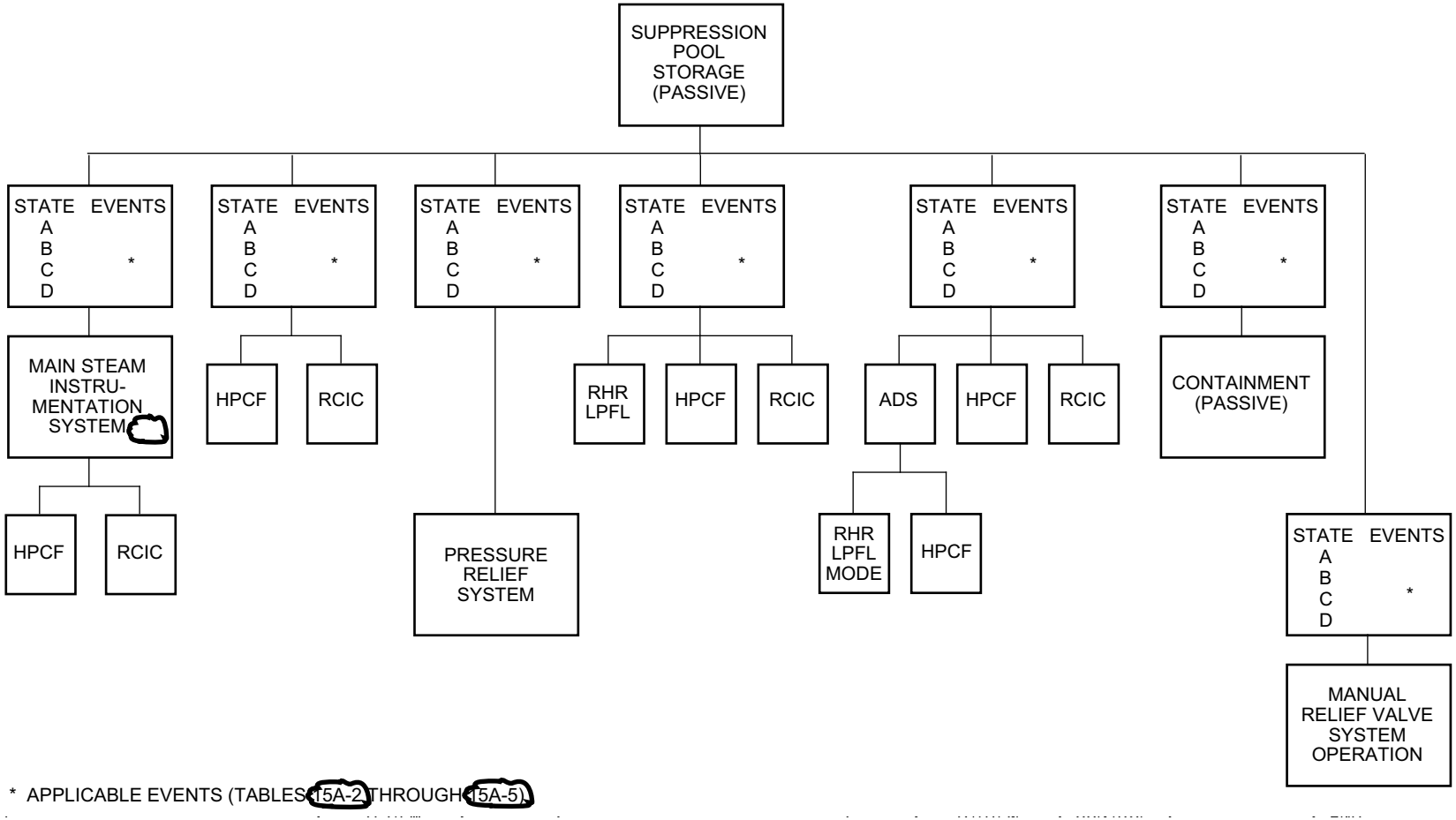

* APPLICABLE EVENTS (TABLES 15A-2 THROUGH 15A-5).

Figure 15A-70 Commonality of Auxiliary Systems—Suppression Pool Storage

15B Failure Modes and Effects Analysis (FMEA)

The information in this appendix of the reference ABWR DCD, including all subsections, tables, and figures, is incorporated by reference with the following departures.

STD DEP T1 3.4-1 (Table 15B-3)

STD DEP 7.7-1 (Figure 15B-1)

15B.1 Introduction

STD DEP T1 3.4-1l

This appendix provides failure modes and effects analyses (FMEAs) for two ABWR systems and one major component which represent a significant change from past BWR designs. Specifically, FMEAs are provided for the following:

(2) ~~*Essential Multiplexing system*~~ Data Communication Function (DCF) of the Reactor Trip and Isolation System (RTIS) and ESF Logic and Control System (ELCS)

15B.2.3 Description

STD DEP 7.7-1

A simplified CRD System process flow diagram is shown in Figure 15B-1. CRD System water is taken from the condensate, feedwater and condensate air extraction system, or Condensate Storage Tank (CST) through a suction filter by a centrifugal pump and discharged through a drive water filter to the HCUs. (During shutdown the CST is the primary source.) Each of these components is independently redundant and only one of each is in operation at any one time. A portion of the pump discharge flow is diverted through a minimum flow bypass line to the CST. The pumped water is directed to the HCU to provide hydraulic scram and to furnish purging to the drive. This system also provides purge water for the reactor internal pumps, nuclear boiler instrument lines, *and the reactor water cleanup pumps.*

15B.4 ~~*Essential Multiplexing System*~~ Data Communication Function of the RTIS and the ELCS

STD DEP T1 3.4-1

The FMEA is described by the PRA fault tree analyses in Chapter 19 (see Subsections 19D.6.4.3 and Section 19Q.5) and the analysis of common-cause failure of ~~*multiplexer*~~ data communication *equipment in Appendix 19N. The system configuration fault definitions and provisions for fault tolerance are discussed and analyzed in the PRA.*

Table 15B-3 DCF of the RTIS and the ELCS ~~***EMS Failure Mode and Effects Analysis***~~

Component Identification	Function	Failure Mode	Failure Mechanism	Effect on System	Method of Failure Detection	Remarks
Remote ~~*mux unit (RMU)*~~ **Digital Logic Controller (RDLC)**	Condition, format and transmit sensor and control signals	Loss of signal or false signal	Loss of electrical power, solid state device failure, loose connection, broken wire	Loss of sensor/ control signal or false signal rejected	Self-test feature and device annunciation in control room	Immediate detection of loss of signal, system test for false signal
~~*Control room mux unit (CMU)*~~ **Digital Logic Controller (DLC)**	Condition, format and transmit sensor and control signals	Loss of signal or false signal	Loss of electrical power, solid state device failure, loose connection, broken wire	Loss of sensor/ control signal or false signal rejected	Self-test feature and device annunciation in control room	Immediate detection of loss of signal, system test for false signal
~~*Multiplexer control units (MCU)*~~	~~*Convert digital to optical signals and vice versa*~~	~~*Loss of signal or false signal*~~	~~*Loss of electrical power, solid state device failure, loose connection, broken wire*~~	~~*Loss of sensor/control signal or false signal rejected*~~	~~*Self test feature and device annunciation in control room*~~	~~*Immediate detection of loss of signal, system test for false signal*~~

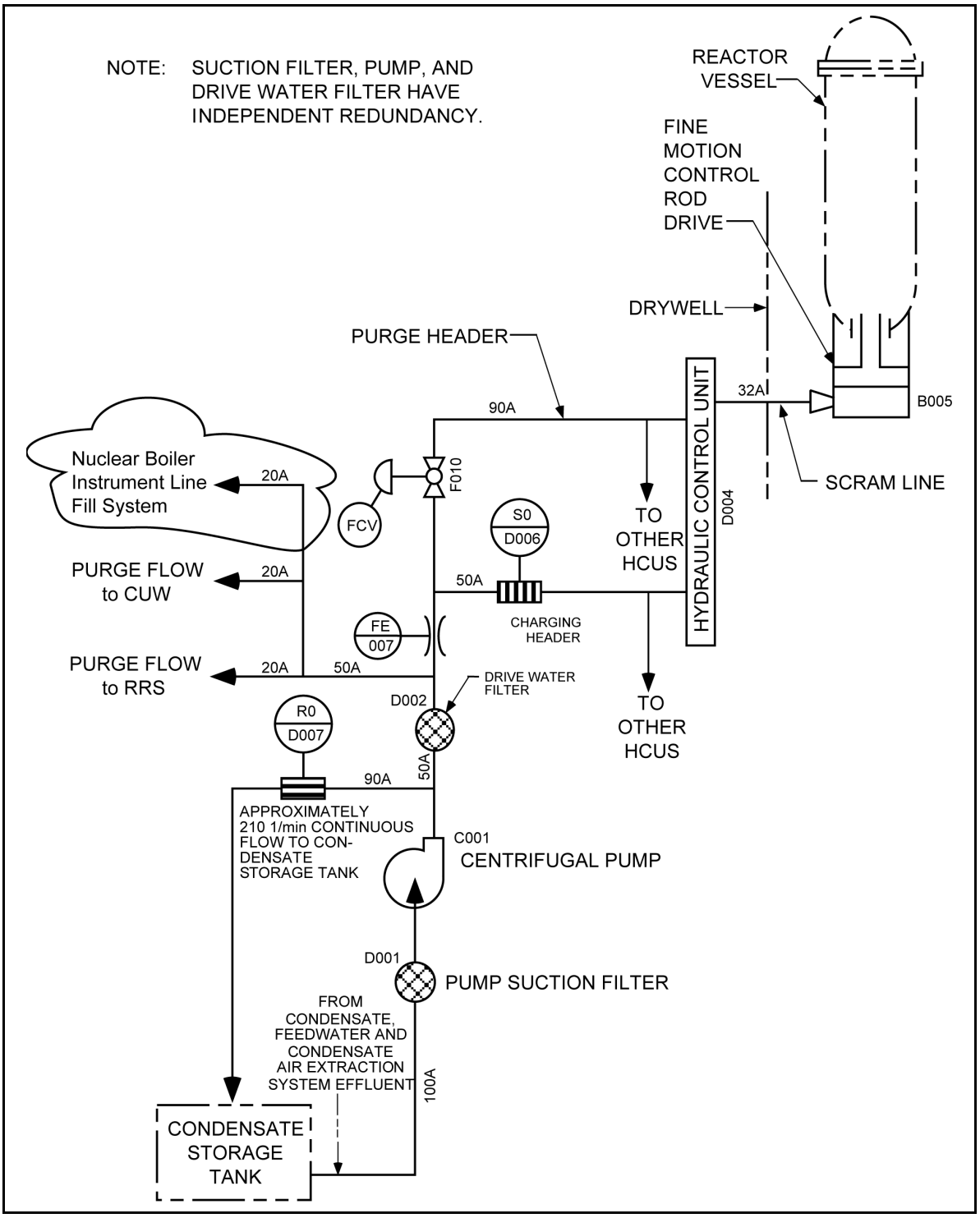

Figure 15B-1 Simplified CRD System Process Flow Diagram

15C Not Used

The information in this appendix of the reference ABWR DCD is incorporated by reference with no departures or supplements.

15D Probability Analysis of Pressure Regulator Downscale Failure

The information in this appendix of the reference ABWR DCD, including all subsections, tables, and figures, is incorporated by reference with no departures or supplements.

15E ATWS Performance Evaluation

The information in this appendix of the reference ABWR DCD, including all subsections, tables, and figures, is incorporated by reference with the following departures.

STD DEP T1 3.4-1 (Figures 15E-1a, 15E-1b, 15E-1c)

STD DEP 16.3-83 (Figure 15E-1b)

STD DEP Admin (Figure 15E-1a, Figure 15E-1b)

15E.5 Selection of Events

STD DEP Admin

Category 1. Limiting Events

(3) Loss of Feedwater

This transient is less severe than the above two events. However, it is the only event which is mitigated by ARI, FMCRD run-in, or boron injection, *initiated from the low level signals. Thus, this event is analyzed to show that the low level trips are capable to mitigate the event.*

(4) Loss of Feedwater Heater

Category 2. Moderate Impact Events

(5) Turbine Trip with Bypass Valves Open

This transient usually produces higher neutron ~~flow heat~~ flux ~~and vessel pressure~~ than ~~those from~~ the *MSIV closure event due to the fast closure of the turbine stop valves. However, the availability of the main condenser significantly reduces the amount of steam discharged into the suppression pool.*

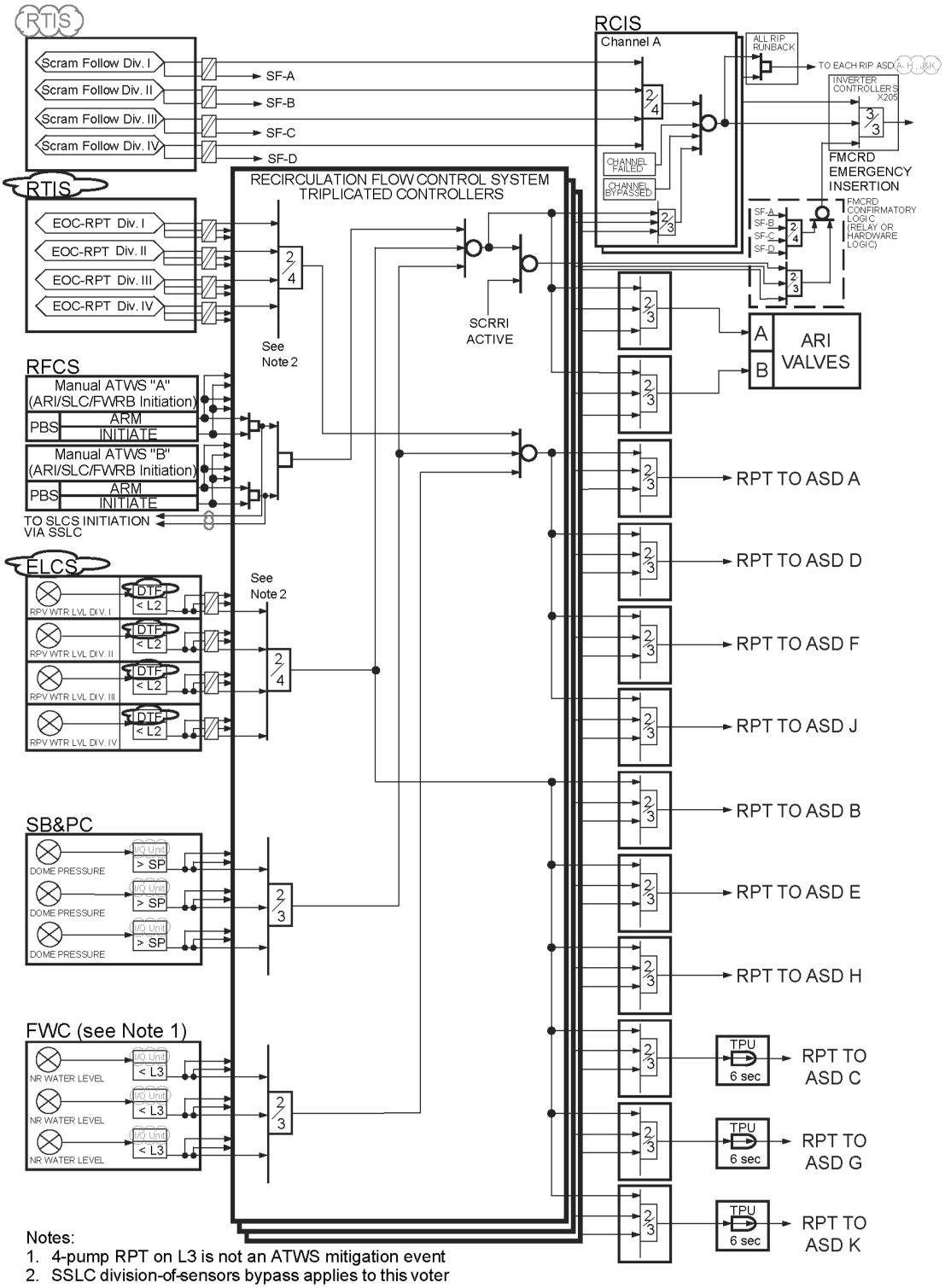

Figure 15E-1a ATWS Mitigation Logic (ARI, FMCRD Run-In, RPT, Manual Initiation)

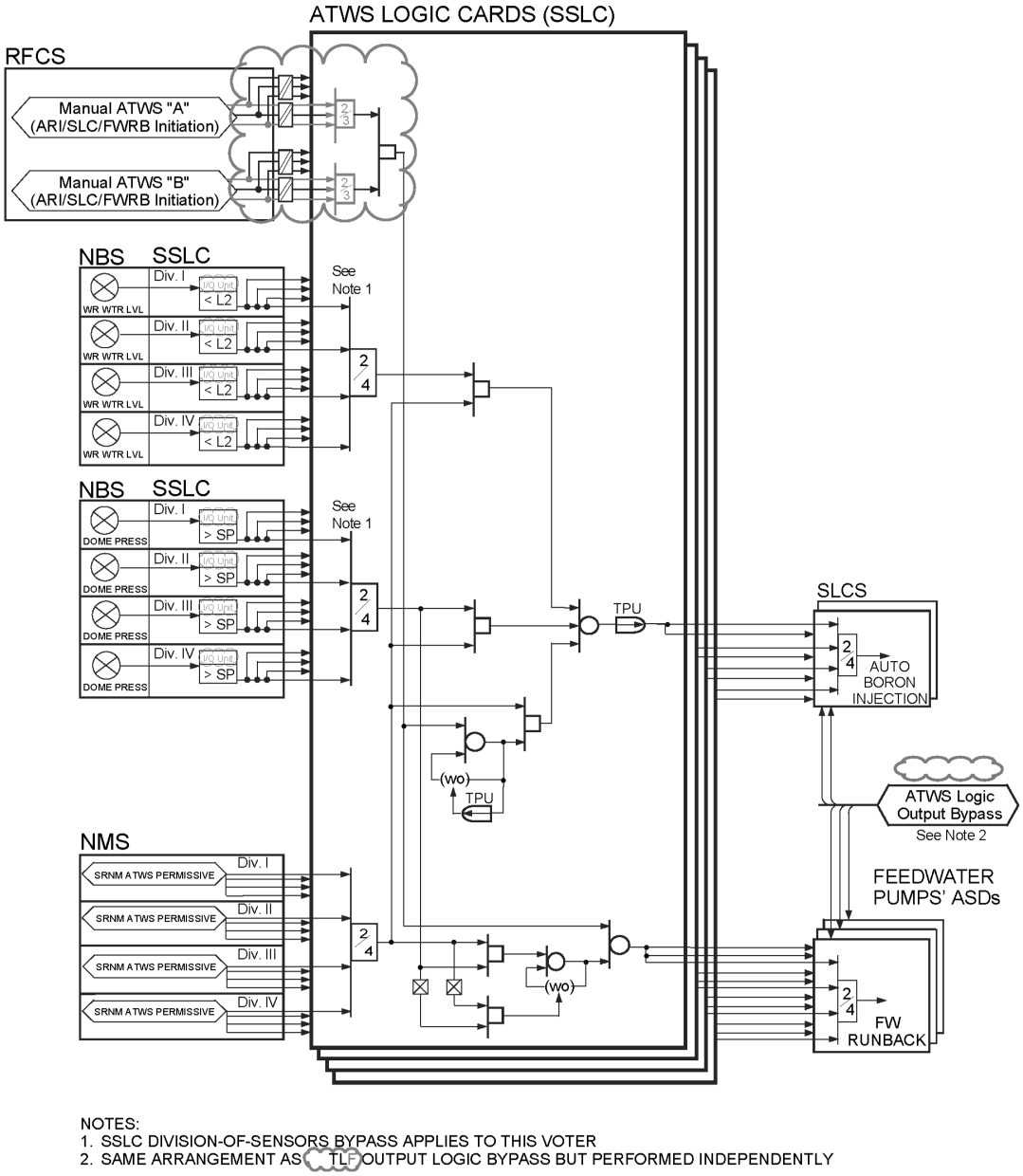

Figure 15E-1b ATWS Mitigation Logic (SLCS Initiation, Feedwater Runback)

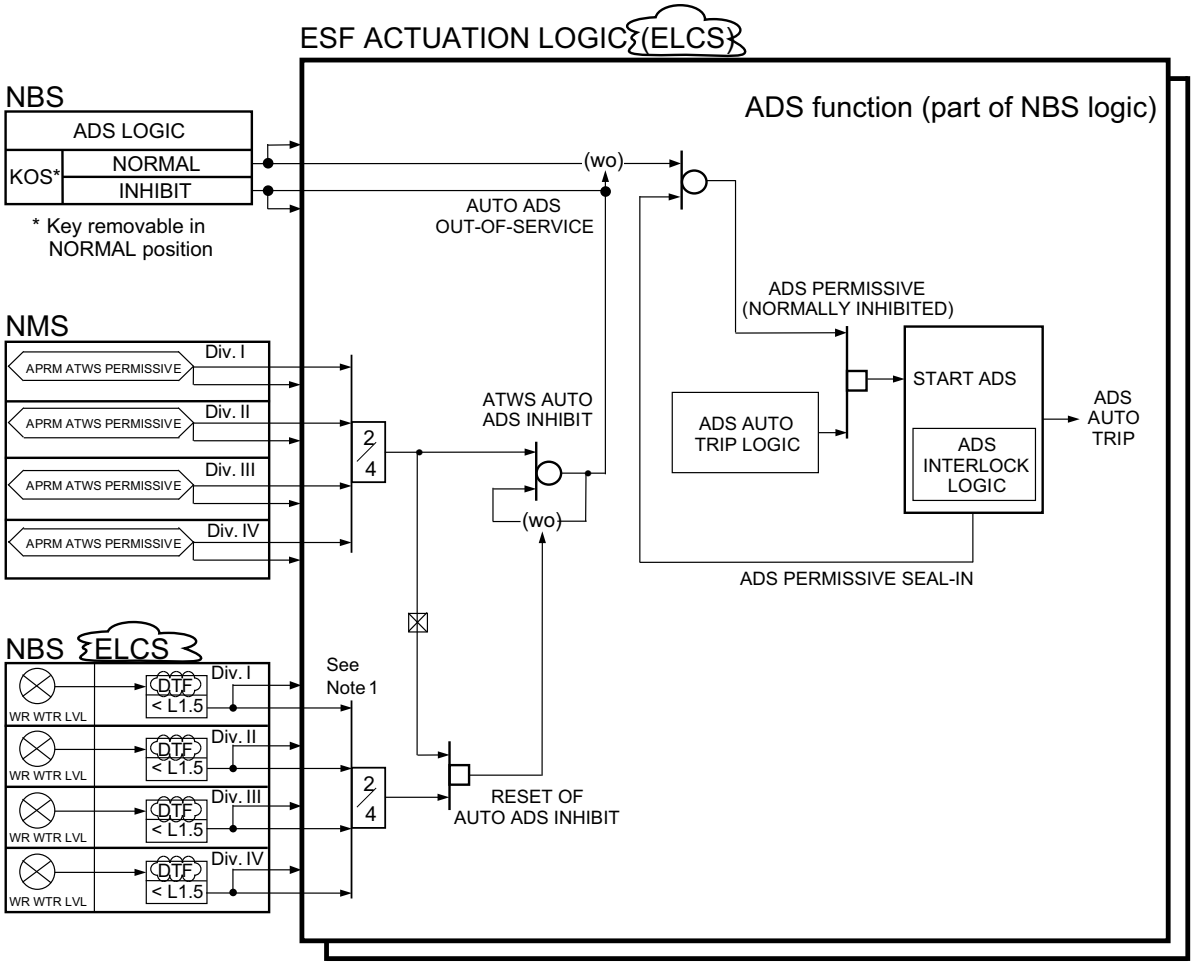

NOTES:
1. ELCS DIVISION-OF-SENSORS BYPASS APPLIES TO THIS VOTER

Figure 15E-1c ATWS Mitigation Logic (SLCS Initiation, Feedwater Runback)

15F LOCA Inventory Curves

The information in this appendix of the reference ABWR DCD, including all subsections and figures, is incorporated by reference with no departures or supplements.

16.0 TECHNICAL SPECIFICATIONS

The information in this section of the reference ABWR DCD, including all subsections, is incorporated by reference with departures and site-specific supplements identified in the individual subsections.

COLA Part 7 provides a list of the departures taken against the Technical Specifications.

[This page intentionally left blank]

1.0 USE AND APPLICATION

The information in this section of the reference ABWR DCD, including all subsections, is incorporated by reference with the following departures.

STD DEP T1 3.4-1
STD DEP 16.3-100

1.1 Definitions

CHANNEL FUNCTIONAL TEST	*A CHANNEL FUNCTIONAL TEST shall be the injection of a simulated or actual signal into the channel as close to the sensor as practicable to verify OPERABILITY, including required alarm, interlock, display, and trip functions, and channel failure trips.* The CHANNEL FUNCTIONAL TEST for those instruments controlled by TS 5.5.2.11, Setpoint Control Program, shall include adjustments, as necessary, such that the setpoints are within the necessary range and accuracy. *The CHANNEL FUNCTIONAL TEST may be performed by means of any series of sequential, overlapping, or total channel steps so that the entire channel is tested.*
DIVISION FUNCTIONAL TEST	*The injection of simulated or actual signals into a division as close to the sensors as practicable to verify OPERABILITY of SENSOR CHANNELS and LOGIC CHANNELS in that division.* The DIVISION FUNCTIONAL TEST for those instruments controlled by TS 5.5.2.11, Setpoint Control Program, shall include adjustments, as necessary, such that the setpoints are within the necessary range and accuracy. *The DIVISION FUNCTIONAL TEST may be performed by means of a series of sequential or overlapping steps. The test shall comprise all the equipment from the ~~DTM~~* DTF *inputs to LOGIC CHANNEL outputs. This test shall also verify that the inputs to the ~~DTMs~~* DTFs *are the same as the information presented at the control room indicators.*

LOGIC CHANNEL	*A LOGIC CHANNEL is defined as a set of interconnecting hardware and software components that process the inputs to produce an identifiable RPS trip signal or ESF actuation signal within a division. For the RPS, this includes the trip signal's associated ~~TLU~~*TLF *2-out-of-4 voters, ~~TLU~~*TLF *bistable functions, operator controls, interlocks, data transmission, alarms, displays, division-of-sensors bypass, transmission lines out to the OLU inputs. Each ESF function will ~~have two ESF LOGIC CHANNELs to~~ include ~~one of~~ the ESF actuation signal's associated ~~SLU~~* DLC *2-out-of-4 voters, ~~SLU~~* DLC *bistable functions, operator controls, interlocks, data transmission, alarms, displays, division-of-sensors bypass, ~~EMS~~*DCF*, and*, as applicable, *transmission lines out to the input of the 2-out-of-2 voters. The ESF actuation signal includes the system actuation signal and all its associated device actuation signals generated in the ~~SLU~~* DLC *out to the 2-out-of-2 voter*, if present*.*
OUTPUT CHANNEL	*An OUTPUT CHANNEL is defined as a set of interconnected components that process outputs from associated LOGIC CHANNELS to produce an identifiable signal that deenergizes scram solenoids, deenergizes MSIV Isolation solenoids, or energizes ESF device actuators within a division. For the RPS, this includes the signal's associated OLU, transmission lines, manual divisional trip and reset switches, trip logic output bypass switch, parallel load driver test switch, and scram pilot valve solenoid load drivers. For the MSIVs, this includes the signal's associated OLU, data transmission, manual divisional isolation and reset switches, trip logic output bypass switch, and MSIV isolation pilot valve solenoid load drivers. For the ESF, this includes the signal's associated* DLC or *2-out-of-2 voter,* as applicable, *ESF Output Channel Bypass switch, and data transmission out to the ESF device actuator.*
SENSOR CHANNEL	*A SENSOR CHANNEL is defined as a set of interconnected hardware and software components that process an identifiable sensor signal within a division. This includes the sensor, data acquisition, signal conditioning, data transmission, alarms, displays, and all transmission lines in the division and between divisions associated with the sensor signal up to an input of a 2-out-of-4 voter or an input of a bistable function within the ~~TLU~~*TLF *or ~~SLU~~* DLC*.*

2.0 SAFETY LIMITS (SLs)

The information in this section of the reference ABWR DCD, including all subsections, is incorporated by reference with the following departure.

STD DEP 16.2-1

2.2 SL Violations

With any SL violation, the following actions shall be completed within 2 hours:

~~*2.2.1*~~ ~~*Within 1 hour, notify the NRC Operations Center, in accordance with 10 CFR 50.72.*~~

~~*2.2.2*~~ ~~*Within 2 hours:*~~

2.2.1 ~~*2.2.2.1*~~ *Restore compliance with all SLs; and*

2.2.2 ~~*2.2.2.2*~~ *Insert all insertable control rods.*

~~*2.2.3*~~ ~~*Within 24 hours, notify the [General Manager—Nuclear Plant and Vice President Nuclear Operations] and the [offsite reviewers specified in Specification 5.5.2, "[Offsite] Review and Audit"].*~~

~~*2.2.4*~~ ~~*Within 30 days, a Licensee Event Report (LER) shall be prepared pursuant to 10 CFR 50.73. The LER shall be submitted to the NRC, the [offsite reviewers specified in Specification 5.5.2], and the [General ManagerNuclear Plant and Vice PresidentNuclear Operations].*~~

~~*2.2.5*~~ ~~*Operation of the unit shall not be resumed until authorized by the NRC.*~~

[This page intentionally left blank]

B 2.0 SAFETY LIMITS (SLs)

B 2.1.1 Reactor Core SLs

BASES

The information in this section of the reference ABWR DCD, including all subsections, is incorporated by reference with the following departure.

STD DEP 16.2-1

SAFETY LIMIT VIOLATIONS

~~*2.2.1*~~

~~*If any SL is violated, the NRC Operations Center must be notified within 1 hour, in accordance with 10 CFR 50.72 (Ref. 3).*~~

2.2.2

Exceeding an SL may cause fuel damage and create a potential for radioactive releases in excess of 10 CFR 100, "Reactor Site Criteria," limits (Ref. ~~4~~ 3). Therefore, it is required to insert all insertable control rods and restore compliance with the SL within 2 hours. The 2 hour Completion Time ensures that the operators take prompt remedial action and also ensures that the probability of an accident occurring during this period is minimal.

~~*2.2.3*~~

~~*If any SL is violated, the appropriate senior management of the nuclear plant and the utility shall be notified within 24 hours. The 24 hour period provides time for plant operators and staff to take the appropriate immediate action and assess the condition of the unit before reporting to the senior management.*~~

~~*2.2.4*~~

~~*If any SL is violated, a Licensee Event Report shall be prepared and submitted within 30 days to the NRC in accordance with 10 CFR 50.73 (Ref. 5). A copy of the report shall also be provided to the senior management of the nuclear plant, and the utility Vice President-Nuclear Operations and the [offsite reviewers specified in Specification 5.5.2 ["Offsite Review and Audit"]]*~~

SAFETY LIMIT VIOLATIONS (continued)

~~*2.2.5*~~

~~*If any SL is violated, restart of the unit shall not commence until authorized by the NRC. This requirement ensures the NRC that all necessary reviews, analyses, and actions are completed before the unit begins its restart to normal operation.*~~

REFERENCES

1. *10 CFR 50, Appendix A, GDC 10.*
2. *NEDE-24011-P-A-(latest approved revision).*
3. ~~*10 CFR 50.72.*~~
3. ~~*4.*~~ *10 CFR 100.*
5. ~~*10 CFR 50.73.*~~

B 2.0 SAFETY LIMITS (SLs)

B 2.1.2 Reactor Coolant System (RCS) Pressure SL

BASES

The information in this section of the reference ABWR DCD, including all subsections, is incorporated by reference with the following departures and supplements. The site-specific supplements partially address COL License Information Item 16.1.

STD DEP 16.2-1
STD DEP 16.2-2

APPLICABLE SAFETY ANALYSES

The RCS safety/relief valves and the Reactor Protection System Reactor Vessel Steam Dome Pressure - High Function have settings established to ensure that the RCS pressure SL will not be exceeded.

The RCS pressure SL has been selected such that it is at a pressure below which it can be shown that the integrity of the system is not endangered. The reactor pressure vessel is designed to ASME, Boiler and Pressure Vessel Code, Section III, ~~[later~~ 1989 Edition~~]~~, ~~including~~ excluding Addenda ~~through the [later 1989 Edition]~~ (Ref. 5), which permits a maximum pressure transient of 110%, 9.48 MPaG, of design pressure 8.62 MPaG. The SL of 9.13 MPaG, as measured by the reactor steam dome pressure indicator, is equivalent to 9.48 MPaG at the lowest elevation of the RCS. The RCS pressure SL is selected to be the lowest transient overpressure allowed by the applicable codes.

STD DEP 16.2-2

SAFETY LIMITS

The maximum transient pressure allowable in the RCS ~~pressure vessel~~ under the ASME Code, Section III, is 110% of design pressure. ~~The maximum transient pressure allowable in the RCS piping, valves, and fittings is 110% of design pressures of 8.62 MPaG for suction piping and 10.35 MPaG for discharge piping. The most limiting of these two allowances is the 110% of design pressure; therefore, t~~The SL on maximum allowable RCS pressure is established at 9.48 MPaG, which equates to 9.13 MPaG reactor steam dome pressure.

STD DEP 16.2-1

SAFETY LIMITS VIOLATIONS

~~*2.2.1*~~

~~*If any SL is violated, the NRC Operations Center must be notified within 1 hour, in accordance with 10 CFR 50.72 (Ref. 6).*~~

2.2.2

Exceeding the RCS pressure SL may cause immediate RCS failure and create a potential for radioactive releases in excess of 10 CFR 100, "Reactor Site Criteria," limits (Ref. 4). Therefore, it is required to insert all insertable control rods and restore compliance with the SL within 2 hours. The 2 hour Completion Time ensures that the operators take prompt remedial action.

~~*2.2.3*~~

~~*If any SL is violated, the appropriate senior management of the nuclear plant and the utility shall be notified within 24 hours. The 24 hour period provides time for plant operators and staff to take the appropriate immediate action and assess the condition of the unit before reporting to the senior management.*~~

~~*2.2.4*~~

~~*If any SL is violated, a Licensee Event Report shall be prepared and submitted within 30 days to the NRC in accordance with 10 CFR 50.73 (Ref. 7). A copy of the report shall also be provided to the senior management of the nuclear plant, and the utility Vice President Nuclear Operations, and the [offsite reviewers specified in Specification 5.5.2 ["Offsite Review and Audit"]].*~~

~~*2.2.5*~~

~~*If any SL is violated, restart of the unit shall not commence until authorized by the NRC. This requirement ensures the NRC that all necessary reviews, analyses, and actions are completed before the unit begins its restart to normal operation.*~~

STD DEP 16.2-1

REFERENCES

1. 10 CFR 50, Appendix A, GDC 14, GDC 15, and GDC 28.

2. ASME, Boiler and Pressure Vessel Code, Section III, Article NB-7000.

3. Boiler and Pressure Vessel Code, Section XI, Article IW-5000.

4. 10 CFR 100.

5. ASME, Boiler and Pressure Vessel Code, ~~[later~~ 1989 Edition~~]~~, excluding Addenda~~, [later Edition]~~.

~~*6. 10 CFR 50.72.*~~

~~*7. 10 CFR 50.73.*~~

[This page intentionally left blank]

3.0 LIMITING CONDITION FOR OPERATION (LCO) APPLICABILITY

The information in this section of the reference ABWR DCD, including all subsections, is incorporated by reference with the following departure.

STP DEP 16.3-1

LCO 3.0.6 *When a supported system LCO is not met solely due to a support system LCO not being met, the Conditions and Required Actions associated with this supported system are not required to be entered. Only the support system LCO ACTIONS are required to be entered. This is an exception to LCO 3.0.2 for the supported system. In this event, additional evaluations and limitations may be required in accordance with Specification ~~5.8~~5.6, "Safety Function Determination Program (SFDP)." If a loss of safety function is determined to exist by this program, the appropriate Conditions and Required Actions of the LCO in which the loss of safety function exists are required to be entered.*

3.0 SURVEILLANCE REQUIREMENT (SR) APPLICABILITY

The information in this section of the reference ABWR DCD, including all subsections, is incorporated by reference with no departures or supplements.

3.1 REACTIVITY CONTROL SYSTEMS

3.1.1 SHUTDOWN MARGIN (SDM)

The information in this section of the reference ABWR DCD, including all subsections, is incorporated by reference with no departures or supplements.

[This page intentionally left blank]

3.1 REACTIVITY CONTROL SYSTEMS

3.1.2 Reactivity Anomalies

The information in this section of the reference ABWR DCD, including all subsections, is incorporated by reference with no departures or supplements.

[This page intentionally left blank]

3.1 REACTIVITY CONTROL SYSTEMS

3.1.3 Control Rod OPERABILITY

The information in this section of the reference ABWR DCD, including all subsections, is incorporated by reference with no departures and the following site-specific supplement. This site-specific supplement partially addresses COL License Information Item 16.1.

Surveillance Requirements

SURVEILLANCE		*FREQUENCY*
SR 3.1.3.4	*Verify each control rod scram time from fully withdrawn to 60% rod insertion position is ≤[1.44] seconds.*	*In accordance with SR 3.1.4.1, SR 3.1.4.2, SR 3.1.4.3, and SR 3.1.4.4*

[This page intentionally left blank]

3.1 REACTIVITY CONTROL SYSTEMS

3.1.4 Control Rod Scram Times

The information in this section of the reference ABWR DCD, including all subsections, is incorporated by reference with no departures and the following site-specific supplements. These site-specific supplements partially address COL License Information Item 16.1.

LCO 3.1.4 *a. No more than [8] OPERABLE control rods shall be "slow," in accordance with Table 3.1.4-1; and*

b. No more than 2 OPERABLE control rods that are "slow" shall occupy adjacent locations.

APPLICABILITY: *MODES 1 and 2.*

ACTIONS

CONDITION	*REQUIRED ACTION*	*COMPLETION TIME*
A. Requirements of the LCO not met.	*A.1 Be in MODE 3.*	*12 hours*

SURVEILLANCE REQUIREMENTS

----------NOTE----------
During single or pair control rod scram time Surveillances, the control rod drive (CRD) pumps shall be isolated from the associated scram accumulator.

SURVEILLANCE		*FREQUENCY*
SR 3.1.4.1	*Verify each control rod scram time is within the limits of Table 3.1.4-1 with reactor steam dome pressure ≥ 6.55 MPaG.*	*Prior to exceeding 40% RTP after fuel movement within the reactor pressure vessel* *AND* (continued)

Table 3.1.4-1
Control Rod Scram Times

----------NOTES----------

1. *OPERABLE control rods with scram times not within the limits of this Table are considered "slow."*

2. *Enter applicable Conditions and Required Actions of LCO 3.1.3, "Control Rod Operability," for control rods with scram times > [1.44] seconds to 60% rod insertion position. These control rods are inoperable, in accordance with SR 3.1.3.4, and are not considered "slow."*

	SCRAM TIMES[a] (seconds)		
ROD POSITION PERCENT INSERTION (%)	REACTOR STEAM DOME PRESSURE[b] 0 MPaG	REACTOR STEAM DOME PRESSURE[b] 6.55 MPaG	REACTOR STEAM DOME PRESSURE[b] 7.24 MPaG
10	(c)	[0.42]	[0.42]
40	(c)	[1.00]	[1.00]
60		[1.44]	[1.44]

a. *Maximum scram time from fully withdrawn position, based on de-energization of scram pilot valve solenoids as time zero.*

b, *For intermediate reactor steam dome pressures, the scram time criteria are determined by linear interpolation.*

c. *For reactor steam dome pressure ≤ 6.55 MPaG, only 60% rod insertion position scram time limit applies.*

3.1 REACTIVITY CONTROL SYSTEMS

3.1.5 Control Rod Scram Accumulators

The information in this section of the reference ABWR DCD, including all subsections, is incorporated by reference with no departures or supplements.

[This page intentionally left blank]

3.1 REACTIVITY CONTROL SYSTEMS

3.1.6 Rod Pattern Control

The information in this section of the reference ABWR DCD, including all subsections, is incorporated by reference with no departures or supplements.

[This page intentionally left blank]

3.1 REACTIVITY CONTROL SYSTEMS

3.1.7 Standby Liquid Control (SLC) System

The information in this section of the reference ABWR DCD, including all subsections, is incorporated by reference with no departures, but the following site-specific supplement. The site specific supplement partially addresses COL License Information Item 16.1.

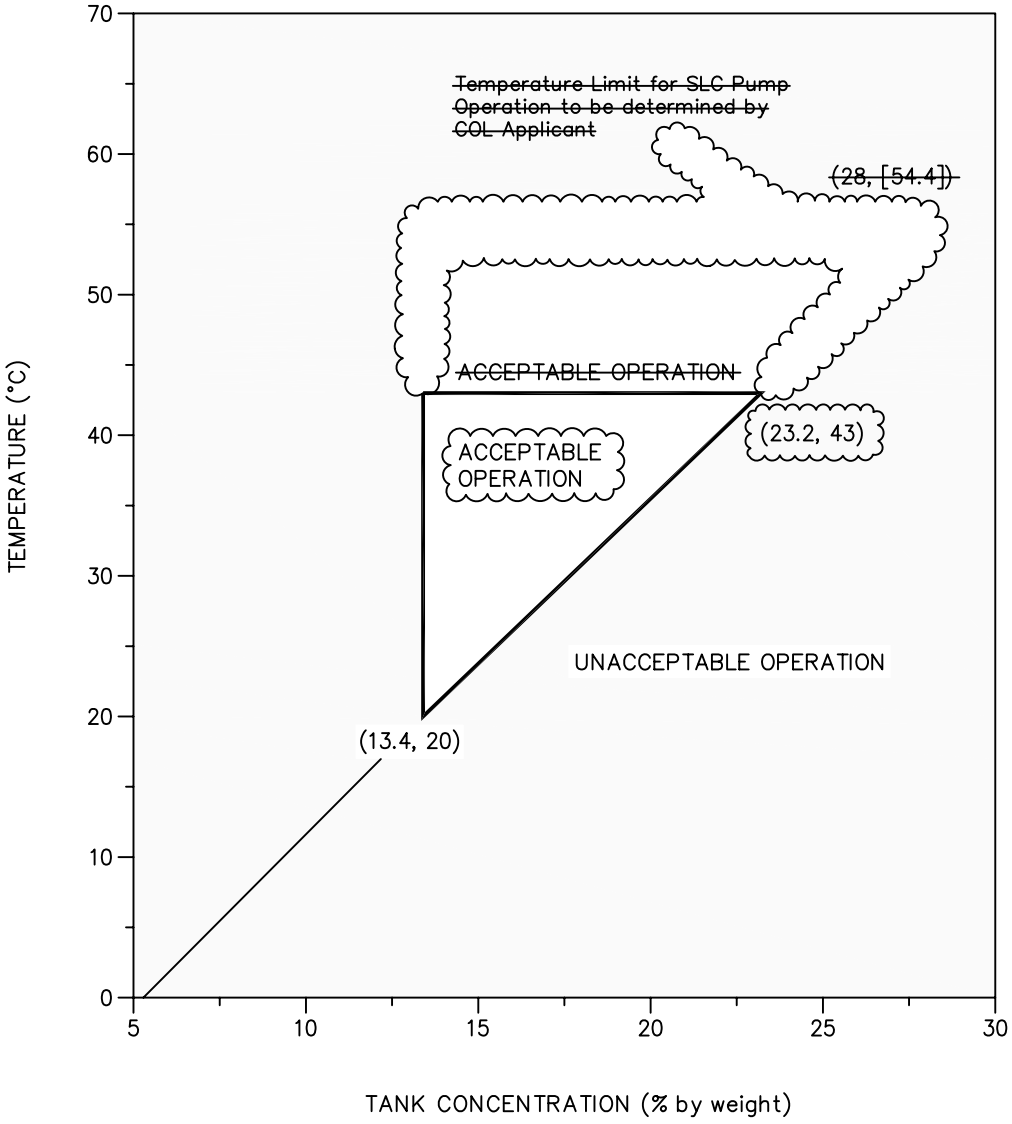

Figure 3.1.7-1 (Page 1 of 1)
Sodium Pentaborate Solution Temperature / Concentration Requirements

3.2 POWER DISTRIBUTION LIMITS

3.2.1 AVERAGE PLANAR LINEAR HEAT GENERATION RATE (APLHGR)

The information in this section of the reference ABWR DCD, including all subsections, is incorporated by reference with no departures or supplements.

[This page intentionally left blank]

3.2 POWER DISTRIBUTION LIMITS

3.2.2 MINIMUM CRITICAL POWER RATIO (MCPR)

The information in this section of the reference ABWR DCD, including all subsections, is incorporated by reference with no departures or supplements.

[This page intentionally left blank]

3.2 POWER DISTRIBUTION LIMITS

3.2.3 LINEAR HEAT GENERATION RATE (LHGR) (Non-GE Fuel)

The information in this section of the reference ABWR DCD, including all subsections, is being deleted in accordance with the following departure.

STD DEP 16.3-95

Not Used.

[This page intentionally left blank]

3.3 INSTRUMENTATION

3.3.1.1 Safety System Logic and Control (SSLC) Sensor Instrumentation

The information in this section of the reference ABWR DCD, including all subsections, is incorporated by reference with the following departures and site-specific supplements. The site specific supplements partially address COL License Information Item 16.1.

STD DEP T1 2.3-1
STD DEP T1 2.4-2
STD DEP 16.3-84
STD DEP 16.3-98
STD DEP 16.3-99
STD DEP 16.3-100

ACTIONS (continued)

CONDITION	*REQUIRED ACTION*	*COMPLETION TIME*
A. Continued	*A.2.2.1 Restore required channel to OPERABLE status.* *OR* *A.2.2.2 --------------NOTE-------------* *1. Remove division of sensors bypass or NMS channel bypass after placing channel in trip.* *2. Division of sensor bypass or NMS bypass is allowed for [6] hours for restoring channel to OPERABLE status.* *3. SENSOR CHANNEL(s) may be considered to remain in a tripped condition when a division containing tripped channel(s) is placed in division of sensors bypass due to subsequent entries into this condition.* *------------------------------------* *Place channel in trip*	*30 days* *30 days*

SURVEILLANCE REQUIREMENTS

----------NOTE----------
Refer to Table 3.3.1.1-1 to determine which SRs apply for each SSLC Sensor Instrumentation Function
---

	SURVEILLANCE	*FREQUENCY*
SR 3.3.1.1.1	*Perform SENSOR CHANNEL CHECK.*	*12 hours*
SR 3.3.1.1.2	*----------NOTE----------* *Only required to be met with THERMAL POWER ≥ 25% RTP.* *----------* *Verify the absolute difference between the average power range monitor (APRM) channels and the calculated power is ≤ 2% RTP*	*~~[7]~~ days*
STD DEP 16.3-100 *SR 3.3.1.1.3*	*----------NOTE----------* *Not required to be performed when entering MODE 2 from MODE 1 until 12 hours after entering MODE 2.* *----------* *Perform DIVISION FUNCTIONAL TEST* in accordance with TS 5.5.2.11, Setpoint Control Program.	*~~[7]~~ days*
STD DEP 16.3-100 *SR 3.3.1.1.4*	*Perform DIVISION FUNCTIONAL TEST* in accordance with TS 5.5.2.11, Setpoint Control Program.	*~~[32~~ 31~~]~~ days*
STD DEP 16.3-100 *SR 3.3.1.1.5*	*Perform DIVISION FUNCTIONAL TEST* in accordance with TS 5.5.2.11, Setpoint Control Program.	*~~[92~~ 31~~]~~ days*

	SURVEILLANCE	FREQUENCY
STD DEP 16.3-100		
SR 3.3.1.1.6	*Perform CHANNEL FUNCTIONAL TEST* in accordance with TS 5.5.2.11, Setpoint Control Program.	*~~[92~~ 31~~]~~ days*
SR 3.3.1.1.7	*Calibrate the local power range monitors.*	*1000 MW·d/t average core exposure*
SR 3.3.1.1.8	*----------NOTE----------* *1. Required to be met with THERMAL POWER ≤ 5% RTP prior to entry into MODE 1 from MODE 2.* *2. Required to be met prior to entry into MODE 2 from MODE 1.* *----------* *Verify the SRNM and APRM channels overlap within at least 1/2 decade.*	*~~[7]~~ days*
SR 3.3.1.1.9	*----------NOTE----------* *Radiation and Neutron detectors are excluded.* *----------* *Perform COMPREHENSIVE FUNCTIONAL TEST.*	*18 months*

	SURVEILLANCE	*FREQUENCY*
STD DEP 16.3-100 *SR 3.3.1.1.10*	*----------NOTE----------* *1. Neutron detectors are excluded.* *2. SENSOR CHANNEL CALIBRATION shall include calibration of all parameters used to calculate setpoints (e.g. recirculation flow for TPM setpoint) and all parameters used for trip function bypasses (e.g. Turbine first stage pressure for TSV closure bypass).* *----------* *Perform SENSOR CHANNEL CALIBRATION* in accordance with TS 5.5.2.11, Setpoint Control Program.	*18 months*
STD DEP 16.3-100 SR 3.3.1.1.11	*Perform CHANNEL CALIBRATION* in accordance with TS 5.5.2.11, Setpoint Control Program.	18 months

Table 3.3.1.1-1 (Page 1 of 7)
SSLC Sensor Instrumentation

FUNCTION	APPLICABLE MODES OR OTHER SPECIFIED CONDITIONS	REQUIRED CHANNELS	CONDITIONS REFERENCED FROM REQUIRED ACTIONS	SURVEILLANCE REQUIREMENTS	STD DEP16.3-100 ~~ALLOWABLE VALUE~~
1. Startup Range Neutron Monitors					
1a. SRNM Neutron Flux– High	2	4	H	SR 3.3.1.1.1 SR 3.3.1.1.3 SR 3.3.1.1.8 SR 3.3.1.1.9 SR 3.3.1.1.10	~~≤ [(i)] % RTP~~
	5[a]	4	I	SR 3.3.1.1.1 SR 3.3.1.1.4 SR 3.3.1.1.9 SR 3.3.1.1.10	~~≤ [(i)] % RTP~~
1b. SRNM Neutron Flux – Short Period	2[b]	4	H	SR 3.3.1.1.1 SR 3.3.1.1.3 SR 3.3.1.1.8 SR 3.3.1.1.10	~~≤ [(i)] Seconds~~
	5[a][b]	4	I	SR 3.3.1.1.1 SR 3.3.1.1.4 SR 3.3.1.1.9 SR 3.3.1.1.10	~~≤ [(i)] Seconds~~
1c. SRNM ATWS Permissive	1, 2	4	H	SR 3.3.1.1.5 SR 3.3.1.1.9 SR 3.3.1.1.10	~~≤ [(i)] RTP for ≥ [(i)] min~~
1d. SRNM - Inop	1,2	4	H	SR 3.3.1.1.3	~~NA~~
	5[a]	4	I	SR 3.3.1.1.4 SR 3.3.1.1.9	
2. Average Power Range Monitors					
2a. APRM Neutron Flux – High, Setdown	2	4	H	SR 3.3.1.1.1 SR 3.3.1.1.3 SR 3.3.1.1.7 SR 3.3.1.1.8 SR 3.3.1.1.10	~~≤ [(i)] % RTP~~
2b. APRM Simulated Thermal Power–High, Flow Biased	1	4	G	SR 3.3.1.1.1 SR 3.3.1.1.2 SR 3.3.1.1.5 SR 3.3.1.1.7 SR 3.3.1.1.9 SR 3.3.1.1.10 SR 3.3.1.1.12	~~≤ [W+ (i)] % RTP and ≤ [(i)] % RTP~~
2c. APRM Fixed Neutron Flux – High	1	4	G	SR 3.3.1.1.1 SR 3.3.1.1.2 SR 3.3.1.1.5 SR 3.3.1.1.7 SR 3.3.1.1.9 SR 3.3.1.1.10 SR 3.3.1.1.12	~~[(i)] % RTP~~
2d. APRM - Inop	1,2	4	H	SR 3.3.1.1.5 SR 3.3.1.1.7	~~NA~~

(continued)

Table 3.3.1.1-1 (Page 2 of 7)
SSLC Sensor Instrumentation

	FUNCTION	APPLICABLE MODES OR OTHER SPECIFIED CONDITIONS	REQUIRED CHANNELS	CONDITIONS REFERENCED FROM REQUIRED ACTIONS	SURVEILLANCE REQUIREMENTS	STD DEP16.3-100 ~~ALLOWABLE VALUE~~
	2e. Rapid Core Flow Decrease	≥ 75 % RTP	4	F	SR 3.3.1.1.1 SR 3.3.1.1.5 SR 3.3.1.1.9 SR 3.3.1.1.10 SR 3.3.1.1.12	~~≥ [(i)] %/s~~
	2f. Oscillation Power Range Monitor.	Per Figure 3.3.1.1-1	4	J	SR 3.3.1.1.1 SR 3.3.1.1.5 SR 3.3.1.1.9 SR 3.3.1.1.10 SR 3.3.1.1.12	~~See footnote (c)~~
	2g. APRM ATWS ADS Permissive	1, 2	4	H	SR 3.3.1.1.5 SR 3.3.1.1.9 SR 3.3.1.1.10	~~≤ [(i)] RTP for ≥ [(i)] min~~
3.	Reactor Vessel Steam Dome Pressure – High					
	3a. RPS Trip Initiation	1, 2	4	H	SR 3.3.1.1.1 SR 3.3.1.1.5 SR 3.3.1.1.9 SR 3.3.1.1.10 SR 3.3.1.1.12	~~≤ [(i)] MPaG~~
	3b. Isolation Initiation	1, 2, 3	4	K	SR 3.3.1.1.1 SR 3.3.1.1.5 SR 3.3.1.1.9 SR 3.3.1.1.10 SR 3.3.1.1.14	~~≤ [(i)] MPaG~~
	STD DEP 16.3-84					
	3c. SLCS and FWRB Initiation	1,2	4	~~G~~ H	SR 3.3.1.1.1 SR 3.3.1.1.6 SR 3.3.1.1.11	~~≤ [(i)] MPaG~~
4.	Reactor Steam Dome Pressure- Low (Injection Permissive)	1, 2, 3	4	N	SR 3.3.1.1.1 SR 3.3.1.1.5 SR 3.3.1.1.9 SR 3.3.1.1.10 SR 3.3.1.1.13	~~≤ [(i)] MPaG~~
5.	Reactor Vessel Water Level– High, Level 8	1, 2, 3 4[e], 5[e]	4	N	SR 3.3.1.1.1 SR 3.3.1.1.5 SR 3.3.1.1.9 SR 3.3.1.1.10	~~≤ [(i)] cm~~
6.	Reactor Vessel Water Level– Low, Level 3					
	6a. RPS Trip Initiation.	1, 2	4	H	SR 3.3.1.1.1 SR 3.3.1.1.5 SR 3.3.1.1.9 SR 3.3.1.1.10 SR 3.3.1.1.12	~~≥ [(i)] cm~~
	6b. Isolation Initiation.	1, 2, 3	4	K	SR 3.3.1.1.1 SR 3.3.1.1.5 SR 3.3.1.1.9 SR 3.3.1.1.10 SR 3.3.1.1.14	~~≥ [(i)] cm~~

(continued)

Table 3.3.1.1-1 (Page 3 of 7)
SSLC Sensor Instrumentation

	FUNCTION	APPLICABLE MODES OR OTHER SPECIFIED CONDITIONS	REQUIRED CHANNELS	CONDITIONS REFERENCED FROM REQUIRED ACTIONS	SURVEILLANCE REQUIREMENTS	STD DEP16.3-100 ~~ALLOWABLE VALUE~~
	6b. Continued	(f)	4	L	SR 3.3.1.1.1 SR 3.3.1.1.5 SR 3.3.1.1.9 SR 3.3.1.1.10 SR 3.3.1.1.14	
7.	Reactor Vessel Water Level - Low, Level 2					
	7a. ESF Initiation	1, 2, 3	4	N	SR 3.3.1.1.1 SR 3.3.1.1.5 SR 3.3.1.1.9 SR 3.3.1.1.10 SR 3.3.1.1.13	~~≥ [(i)] cm~~
	7b. Isolation Initiation.	1, 2, 3	4	K	SR 3.3.1.1.1 SR 3.3.1.1.5 SR 3.3.1.1.9 SR 3.3.1.1.10 SR 3.3.1.1.14	~~≥ [(i)] cm~~
		(f)	4	L	SR 3.3.1.1.1 SR 3.3.1.1.5 SR 3.3.1.1.9 SR 3.3.1.1.10 SR 3.3.1.1.14	
	STD DEP 16.3-84					
	7c. SLCS and FWRB Initiation	1,2	4	~~G~~ H	SR 3.3.1.1.1 SR 3.3.1.1.6 SR 3.3.1.1.11	~~≥ [(i)] cm~~
8.	Reactor Vessel Water Level– Low, Level 1.5					
	8a. ESF initiation	1, 2, 3 4[e], 5[e]	4	N	SR 3.3.1.1.1 SR 3.3.1.1.5 SR 3.3.1.1.9 SR 3.3.1.1.10 SR 3.3.1.1.13	~~≥ [(i)] cm~~
	8b. Isolation Initiation	1, 2, 3	4	Q	SR 3.3.1.1.1 SR 3.3.1.1.5 SR 3.3.1.1.9 SR 3.3.1.1.10 SR 3.3.1.1.14	~~≥ [(i)] cm~~
	8c. ATWS ADS Inhibit	1, 2	4	H	SR 3.3.1.1.1 SR 3.3.1.1.5 SR 3.3.1.1.9 SR 3.3.1.1.10	~~≥ [(i)] cm~~
9.	Reactor Vessel Water Level– Low, Level 1					
	9a. ADS A, CAMS A, LPFL A & LPFL C Initiation	1, 2, 3 4[e], 5[e]	4	N	SR 3.3.1.1.1 SR 3.3.1.1.5 SR 3.3.1.1.9 SR 3.3.1.1.10 SR 3.3.1.1.13	~~≥ [(i)] cm~~

(continued)

Table 3.3.1.1-1 (Page 4 of 7)
SSLC Sensor Instrumentation

	FUNCTION	APPLICABLE MODES OR OTHER SPECIFIED CONDITIONS	REQUIRED CHANNELS	CONDITIONS REFERENCED FROM REQUIRED ACTIONS	SURVEILLANCE REQUIREMENTS	STD DEP16.3-100 ~~ALLOWABLE VALUE~~
	9b. ADS B, Diesel Generator, RCW, CAMS B, & LPFL B Initiation	1, 2, 3 4[e], 5[e]	4	N	SR 3.3.1.1.1 SR 3.3.1.1.5 SR 3.3.1.1.9 SR 3.3.1.1.10 SR 3.3.1.1.13	~~≥ [(i)] cm~~
	9c. Isolation Initiation	1, 2, 3	4	Q	SR 3.3.1.1.1 SR 3.3.1.1.5 SR 3.3.1.1.9 SR 3.3.1.1.10 SR 3.3.1.1.14	~~≥ [(i)] cm~~
10.	Main Steam Isolation Valve– Closure	1	4	G	SR 3.3.1.1.5 SR 3.3.1.1.9 SR 3.3.1.1.10 SR 3.3.1.1.12	~~≤ [(i)] % closed~~
11.	Drywell Pressure – High					
	11a. RPS Initiation.	1, 2	4	H	SR 3.3.1.1.1 SR 3.3.1.1.5 SR 3.3.1.1.9 SR 3.3.1.1.10 SR 3.3.1.1.12	~~≤ [(i)] MPaG~~
	11b. ESF Initiation.	1, 2, 3	4	P	SR 3.3.1.1.1 SR 3.3.1.1.5 SR 3.3.1.1.9 SR 3.3.1.1.10 SR 3.3.1.1.13	~~≤ [(i)] MPaG~~
	11c. Isolation Initiation.	1, 2, 3	4	Q	SR 3.3.1.1.1 SR 3.3.1.1.5 SR 3.3.1.1.9 SR 3.3.1.1.10 SR 3.3.1.1.14	~~≤ [(i)] MPaG~~
	STD DEP T1 2.4-2					
	11d. Feedwater Line Break Mitigation Initiation.	1,2,3	4	P	SR 3.3.1.1.1 SR 3.3.1.1.5 SR 3.3.1.1.9 SR 3.3.1.1.10 SR 3.3.1.1.13	~~≤ [(i)] MPaG~~
12.	CRD Water Header Charging Pressure - Low	1,2	4	H	SR 3.3.1.1.1 SR 3.3.1.1.5 SR 3.3.1.1.10	~~≤ [(i)] MPaG~~
		5[a]	4	I	SR 3.3.1.1.1 SR 3.3.1.1.5 SR 3.3.1.1.9 SR 3.3.1.1.10	
13.	Turbine Stop Valve– Closure	≥[40] % RTP	4	F	SR 3.3.1.1.5 SR 3.3.1.1.9 SR 3.3.1.1.10 SR 3.3.1.1.12	~~≤ [(i)] % closed~~

(continued)

Table 3.3.1.1-1 (Page 5 of 7)
SSLC Sensor Instrumentation

	FUNCTION	APPLICABLE MODES OR OTHER SPECIFIED CONDITIONS	REQUIRED CHANNELS	CONDITIONS REFERENCED FROM REQUIRED ACTIONS	SURVEILLANCE REQUIREMENTS	STD DEP16.3-100 ~~ALLOWABLE VALUE~~
14.	Turbine Control Valve Fast Closure, Trip Oil Pressure– Low	≥[40] %RTP	4	F	SR 3.3.1.1.1 SR 3.3.1.1.5 SR 3.3.1.1.9 SR 3.3.1.1.10 SR 3.3.1.1.12	~~≥ [(i)] % MPaG oil pressure~~
~~15.~~	~~Main Steam Tunnel Radiation - High~~					
	~~15a. RPS Trip Initiation~~	~~1,2~~	~~4~~	~~H~~	~~SR 3.3.1.1.5~~ ~~SR 3.3.1.1.9~~ ~~SR 3.3.1.1.10~~	~~≤ [ ] gray~~
	~~15b. Isolation Initiation~~	~~1,2,3~~	~~4~~	~~Q~~	~~SR 3.3.1.1.5~~ ~~SR 3.3.1.1.9~~ ~~SR 3.3.1.1.10~~	~~≤ [ ] gray~~
	STD DEP T1 2.4-2					
15.	Feedwater Line Differential Pressure– High	1, 2, 3	4	P	SR 3.3.1.1.1 SR 3.3.1.1.5 SR 3.3.1.1.9 SR 3.3.1.1.10 SR 3.3.1.1.13	~~≤ (i) MPaD~~
16.	Suppression Pool Temperature–High					
	16a. RPS Initiation.	1, 2	4	H	SR 3.3.1.1.1 SR 3.3.1.1.5 SR 3.3.1.1.9 SR 3.3.1.1.10 SR 3.3.1.1.12	~~≤ [(i)] °C~~
	16b. ESF Initiation.	1, 2, 3	4	N	SR 3.3.1.1.1 SR 3.3.1.1.5 SR 3.3.1.1.9 SR 3.3.1.1.10	~~≤ [(i)] °C~~
17.	Condensate Storage Tank Level– Low	1, 2, 3 4[(e)], 5[(e)]	4	M	SR 3.3.1.1.1 SR 3.3.1.1.5 SR 3.3.1.1.9 SR 3.3.1.1.10	~~≥ [(i)] cm~~
18.	Suppression Pool Water Level– High	1, 2, 3 4[(e)], 5[(e)]	4	M	SR 3.3.1.1.1 SR 3.3.1.1.5 SR 3.3.1.1.9 SR 3.3.1.1.10	~~≤ [(i)] cm~~
19.	Main Steam Line Pressure–Low	1	4	G	SR 3.3.1.1.1 SR 3.3.1.1.5 SR 3.3.1.1.9 SR 3.3.1.1.10	~~≤ [(i)] MPaG~~

(continued)

Table 3.3.1.1-1 (Page 6 of 7)
SSLC Sensor Instrumentation

FUNCTION	APPLICABLE MODES OR OTHER SPECIFIED CONDITIONS	REQUIRED CHANNELS	CONDITIONS REFERENCED FROM REQUIRED ACTIONS	SURVEILLANCE REQUIREMENTS	STD DEP16.3-100 ~~ALLOWABLE VALUE~~
20. Main Steam Line Flow– High	1, 2, 3	4 per MSL	Q	SR 3.3.1.1.1 SR 3.3.1.1.5 SR 3.3.1.1.9 SR 3.3.1.1.10 SR 3.3.1.1.14	~~≥ (i) kg/hr~~
21. Condenser Vacuum– Low	1, 2[(d)], 3[(d)]	4	Q	SR 3.3.1.1.1 SR 3.3.1.1.5 SR 3.3.1.1.9 SR 3.3.1.1.10	~~≥ [(i)] MPaG~~
22. Main Steam Tunnel Temperature– High	1, 2, 3	4	Q	SR 3.3.1.1.1 SR 3.3.1.1.5 SR 3.3.1.1.9 SR 3.3.1.1.10	~~≤ [(i)] °C~~
23. Main Turbine Area Temparature– High	1, 2, 3	4	Q	SR 3.3.1.1.1 SR 3.3.1.1.5 SR 3.3.1.1.9 SR 3.3.1.1.10	~~≤ [(i)] °C~~
24a. Reactor Building Area Exhaust Air Radiation– High	1, 2, 3	4	K	SR 3.3.1.1.1 SR 3.3.1.1.5 SR 3.3.1.1.10	~~≤ [(i)] gray~~
	(f), (g)	4	L	SR 3.3.1.1.1 SR 3.3.1.1.5 SR 3.3.1.1.9 SR 3.3.1.1.10 SR 3.3.1.1.14	
24.b Fuel Handling Area Exhaust Air Radiation - High	1,2,3	4	K	SR 3.3.1.1.1 SR 3.3.1.1.5 SR 3.3.1.1.10	~~≤ [(i)] gray~~
	(f), (g)	4	L	SR 3.3.1.1.1 SR 3.3.1.1.5 SR 3.3.1.1.9 SR 3.3.1.1.10 SR 3.3.1.1.14	
25. RCIC Steam Line Flow– High	1,2,3	4	K	SR 3.3.1.1.1 SR 3.3.1.1.5 SR 3.3.1.1.9 SR 3.3.1.1.10	~~≥ (i) kg/h~~
26. RClC Steam Supply Line Pressure– Low	1,2,3	4	K	SR 3.3.1.1.1 SR 3.3.1.1.5 SR 3.3.1.1.9 SR 3.3.1.1.10	~~≤ [(i)] MPaG~~
27. RCIC Equipment Area Temperature– High	1,2,3	4	K	SR 3.3.1.1.1 SR 3.3.1.1.5 SR 3.3.1.1.9 SR 3.3.1.1.10	~~≤ [(i)] °C~~
28. RHR Area Temperatures– High	2, 3	4 each RHR area	K	SR 3.3.1.1.1 SR 3.3.1.1.5 SR 3.3.1.1.9 SR 3.3.1.1.10	~~≤ [(i)] °C~~

(continued)

Table 3.3.1.1-1 (Page 7 of 7)
SSLC Sensor Instrumentation

	FUNCTION	APPLICABLE MODES OR OTHER SPECIFIED CONDITIONS	REQUIRED CHANNELS	CONDITIONS REFERENCED FROM REQUIRED ACTIONS	SURVEILLANCE REQUIREMENTS	STD DEP16.3-100 ~~ALLOWABLE VALUE~~
29.	CUW Differential Flow– High	1,2,3	4	K	SR 3.3.1.1.1 SR 3.3.1.1.5 SR 3.3.1.1.9 SR 3.3.1.1.10	~~≤ [(i)] Liters/min for ≤ [(i)] Seconds~~
30.	CUW Regenerative Heat Exchanger Area Temperature– High	1,2,3	4	K	SR 3.3.1.1.1 SR 3.3.1.1.5 SR 3.3.1.1.9 SR 3.3.1.1.10	~~≤ [(i)] °C~~
31.	CUW non-regenerative Heat Exchanger Area Temperature– High	1,2,3	4	K	SR 3.3.1.1.1 SR 3.3.1.1.5 SR 3.3.1.1.9 SR 3.3.1.1.10	~~≤ [(i)] °C~~
32.	CUW Equipment Area Temperature– High	1,2,3	4	K	SR 3.3.1.1.1 SR 3.3.1.1.5 SR 3.3.1.1.9 SR 3.3.1.1.10	~~≤ [(i)] °C~~
33.	RCW/RSW Heat Exchanger Room Water Level– High	(h)	4 each RCW/RSW HX Room	K	SR 3.3.1.1.1 SR 3.3.1.1.5 SR 3.3.1.1.9 SR 3.3.1.1.10	~~≤ [(i)] m~~

(a) With any control rod withdrawn from a core cell containing one or more fuel assemblies.

(b) Trip automatically bypassed within each SRNM and not required to be OPERABLE at reactor power levels ≤ [0.0001] % RTP

~~(c) 1. Neutron flux oscillations within any OPRM cell have a period between [1.15] seconds and [3.35] seconds that persists for [10] cycles with a peak to peak amplitude of that is [10] % of point or greater~~
~~2. Neutron flux oscillations within any OPRM cell that have a period between [0.31] and [2.2] seconds become larger than [30] % of point within [3] periods or oscillations with the specified period range that are greater than [10] % of point grow by [30] % of point within [3] cycles.~~(Not Used)

(d) With any Turbine Stop Valve not fully closed.

(e) When associated features are required to be operable.

(f) During CORE ALTERATIONS or operations with a potential for draining the reactor vessel.

(g) During movement of irradiated fuel assemblies in the secondary containment.

(h) When RSW pumps are required to be OPERABLE or in operation.

[This page intentionally left blank]

3.3 INSTRUMENTATION

3.3.1.2 Reactor Protection System (RPS) and Main Steam Isolation Valve (MSIV) Actuation

The information in this section of the reference ABWR DCD, including all subsections, is incorporated by reference with the following departures and site-specific supplements. The site specific supplements partially address COL License Information Item 16.1.

STD DEP T1 3.4-1
STD DEP 16.3-81 (Table 3.3.1.2-1)

ACTIONS

CONDITION	*REQUIRED ACTION*	*COMPLETION TIME*
A. One or more Functions with one channel inoperable.	----------NOTE---------- *Only applicable to Functions 1a, 2a, and 5.* ---------- *A.1 Place affected division in trip.* *OR* *A.2.1 Place affected division in ~~TLU~~ TLF logic output bypass.* *AND* *A.2.2.1 Restore required channel(s) to OPERABLE status* *OR* *A.2.2.2 Place affected division in trip.*	 *6 hours* *6 hours* *30 days* *30 days*
B. One or more Functions with two channels inoperable.	----------NOTE---------- *Only applicable to Functions 1a, 2a, and 5.* ---------- *B.1 Place one affected division in trip.*	 *3 hours*

ACTIONS

CONDITION	*REQUIRED ACTION*	*COMPLETION TIME*
	AND	
	B.2 *Place the other affected division in ~~TLU~~ TLF logic output bypass.*	*6 hours*
	AND	
	B.3 *Restore at least one inoperable channel to OPERABLE status*	*30 days*

SURVEILLANCE REQUIREMENTS

----------NOTE----------
Refer to Table 3.3.1.2-1 to determine which SRs apply for each RPS and MSIV Actuation Function.

SURVEILLANCE		*FREQUENCY*
SR 3.3.1.2.1	*Perform CHANNEL FUNCTIONAL TEST*	*~~[7]~~ days*
SR 3.3.1.2.2	*Perform DIVISION FUNCTIONAL TEST.*	*~~[92~~ 31~~]~~ days*
SR 3.3.1.2.3	*Perform CHANNEL FUNCTIONAL TEST.*	*~~[92~~ 31~~]~~ days*
SR 3.3.1.2.4	*Perform COMPREHENSIVE FUNCTIONAL TEST.*	*18 months*
SR 3.3.1.2.5	*Perform OUTPUT CHANNEL FUNCTIONAL TEST.*	*18 months*
SR 3.3.1.2.6	*Verify RPS RESPONSE TIME is within limits .*	*18 months*
SR 3.3.1.2.7	*Verify ISOLATION RESPONSE TIME is within limits*	*18 months*

Table 3.3.1.2-1 (Page 1 of 1)
RPS and MSIV Actuation

FUNCTION	APPLICABLE MODES OR OTHER SPECIFIED CONDITIONS	REQUIRED CHANNELS	SURVEILLANCE REQUIREMENTS
1. RPS Actuation.			
a. LOGIC CHANNELs	1, 2, 5[(a)](b)	4	SR 3.3.1.2.2 SR 3.3.1.2.4 SR 3.3.1.2.6
b. OUTPUT CHANNELs	1, 2, 5[(a)]	4	~~SR 3.3.1.2.2~~ SR 3.3.1.2.4 SR 3.3.1.2.5 SR 3.3.1.2.6
2. MSIVs and MSL Drain Valves Actuation.			
a. LOGIC CHANNELs	1, 2, 3	4	SR 3.3.1.2.2 SR 3.3.1.2.4 SR 3.3.1.2.7
b. OUTPUT CHANNELs	1, 2, 3	4	~~SR 3.3.1.2.2~~ SR 3.3.1.2.4 SR 3.3.1.2.5 SR 3.3.1.2.7
3. Manual RPS Scram.	1, 2, 5[(a)]	2	SR 3.3.1.2.1
4. Reactor Mode Switch-Shutdown Position.	1, 2, 5[(a)]	2	SR 3.3.1.2.4
5. Manual MSIV Actuation.	1, 2, 3	4	SR 3.3.1.2.3 SR 3.3.1.2.4

(a) With any control rod withdrawn in a core cell containing at least one fuel assembly.

(b) SRNM and APRM LOGIC CHANNELS are only required to be OPERABLE when the associated Functions in LCO 3.3.1.1 are required to be OPERABLE.

[This page intentionally left blank]

3.3 INSTRUMENTATION

3.3.1.3 Standby Liquid Control (SLC) and Feedwater Runback (FWRB) Actuation

The information in this section of the reference ABWR DCD, including all subsections, is incorporated by reference with no departures and the following site-specific supplement. The site specific supplement partially addresses COL License Information Item 16.1.

SURVEILLANCE REQUIREMENTS

----------NOTE----------
Refer to Table 3.3.1.3-1 to determine which SRs apply for each function.

SURVEILLANCE		*FREQUENCY*
SR 3.3.1.3.1	*Perform DIVISION FUNCTIONAL TEST.*	*[~~92~~ 31] days*
SR 3.3.1.3.2	*Perform LOGIC SYSTEM FUNCTIONAL TEST.*	*18 months*
SR 3.3.1.3.3	*Perform OUTPUT CHANNEL FUNCTIONAL TEST.*	*18 months*

[This page intentionally left blank]

3.3 INSTRUMENTATION

3.3.1.4 ESF Actuation Instrumentation

The information in this section of the reference ABWR DCD, including all subsections, is incorporated by reference with the following departures and site-specific supplements. These site specific supplements partially address COL License Information Item 16.1.

STD DEP T1 2.4-2
STD DEP T1 2.4-3
STD DEP T1 3.4-1 (All)
STD DEP 8.3-1 (Table 3.3.1.4-1)
STD DEP 16.3-50
STD DEP 16.3-86
STD DEP 16.3-94
STD DEP 16.3-100
Standard Supplement - NRC Bulletin 2012-01

ACTIONS

CONDITION	REQUIRED ACTION	COMPLETION TIME
B. One or more Functions with one or more LOGIC CHANNELS inoperable.	*B.1 ~~Place associated channel in bypass.~~*	1 hour
	~~AND~~	
OR	*~~B.2.1~~ Restore channel(s) to OPERABLE status*	*~~30 days~~*
	~~OR~~	
One or more Functions with one or more OUTPUT CHANNELS ~~manual initiation channel~~ inoperable.	*~~B.2.2 Verify redundant feature(s) are OPERABLE~~*	*~~30 days~~*
C. One or more Functions with one or more SENSOR CHANNELS inoperable.	*C.1 Restore ~~at least one required~~ channel(s) to OPERABLE status.*	*1 hour*
~~OR~~		
~~One or more Functions with two LOGIC CHANNELS or two manual initiation channels inoperable~~		

ACTIONS (continued)

CONDITION	REQUIRED ACTION	COMPLETION TIME
D. One or more Functions with one or more OUTPUT CHANNELs inoperable. *OR* *HPCF C diverse logic manual initiation channel inoperable.*	*D.1 Restore ESF actuation capability for the affected devices.* *OR* *D.2 ----------NOTE---------- This Action applies only to Functions 10.b, 12.b, 13.b, and 14.b. ----------* *Actuate associated device(s).*	*1 hour* *1 hour*
E. One or more Functions with one or more inoperable SENSOR CHANNELS.	*E.1 Restore inoperable channel.* *OR* *E.2 Declare associated device(s) inoperable.*	*24 hours* *24 hours*
F. One or more Functions with ~~two~~ one or more manual initiation channels inoperable.	*F.1 Restore ~~at least one channel to OPERABLE status~~ manual initiation capability for the affected Functions.*	*7 days*

ACTIONS (continued)

CONDITION	REQUIRED ACTION	COMPLETION TIME
H. One or more ADS OUTPUT CHANNELS inoperable ~~on~~ in one ~~or more~~ ADS ~~valves~~ division. *OR* *One or more ADS LOGIC CHANNELS inoperable in one ADS division.* *OR* *One or more ADS manual initiation channels inoperable in one ADS division.* *OR* *One or more ATWS manual ADS inhibit channels inoperable in one ADS division.* *OR* *Five required ADS SENSOR CHANNELS inoperable in one ADS division.*	*H.1 Restore channel(s) to OPERABLE status.*	*3 days if only one high pressure ECCS subsystem is OPERABLE* *AND* *7 days if two or more high pressure ECCS subsystems are OPERABLE.*

ACTIONS (continued)

CONDITION	REQUIRED ACTION	COMPLETION TIME
I. One or more SENSOR CHANNELS inoperable. *OR* *One or more ADS ~~valves with two~~ OUTPUT CHANNELS inoperable in two ADS divisions.* *OR* *One or more ADS LOGIC CHANNELS inoperable in two ADS divisions.* *OR* *One or more ADS manual initiation channels inoperable in two ADS divisions.* *OR* *One or more ATWS manual ADS inhibit channels inoperable in two ADS divisions.* *OR* *Required Action and associated Completion Time of Condition H not met.*	*I.1 Declare associated ESF features inoperable.*	*1 hour*

ACTIONS (continued)

CONDITION	REQUIRED ACTION	COMPLETION TIME
M. ADS initiation capability not maintained in both ADS divisions. *OR* *Required Actions and associated Completion Times of Condition ~~H,~~ J, K, or L not met.*	*M.1 Declare ADS valves inoperable.*	*Immediately*

SURVEILLANCE REQUIREMENTS

----------NOTE----------
Refer to Table 3.3.1.4-1 to determine which SRs apply for each ESF Actuation Instrumentation Function.

SURVEILLANCE		FREQUENCY
STD DEP 16.3-100 *SR 3.3.1.4.3*	*Perform DIVISIONAL FUNCTIONAL TEST* in accordance with TS 5.5.2.11, Setpoint Control Program.	*[~~92~~ 31] days*
STD DEP 16.3-100 *SR 3.3.1.4.6*	*Perform SENSOR CHANNEL CALIBRATION* in accordance with TS 5.5.2.11, Setpoint Control Program.	*18 months*
STD DEP 16.3-86 *SR 3.3.1.4.7*	*Perform ~~Manual initiation~~ CHANNEL FUNCTIONAL TEST.*	*18 months*

Table 3.3.1.4-1 (Page 1 of 6)
ESF Actuation Instrumentation

FUNCTION	APPLICABLE MODES OR OTHER SPECIFIED CONDITIONS	REQUIRED CHANNELS	APPLICABLE CONDITIONS	SURVEILLANCE REQUIREMENTS	STD DEP16.3-100 ~~ALLOWABLE VALUE~~
1. Low Pressure Core Flooder Actuation.					
1a. LPFL Pump Discharge Pressure– High.	1,2,3, 4[g],5[g]	1 per pump[a]	C	SR 3.3.1.4.1 SR 3.3.1.4.3 SR 3.3.1.4.4 SR 3.3.1.4.6	~~≥ [(k)] MPaG~~
1b. LPFL Pump Discharge Flow– Low.	1,2,3, 4[g],5[g]	1 per pump[a]	C	SR 3.3.1.4.1 SR 3.3.1.4.3 SR 3.3.1.4.4 SR 3.3.1.4.6	~~≤ [(k)] litfers per min~~
1c. LPFL System Initiation.	1,2,3, 4[g],5[g]	2 per subsystem[b]	~~B, C~~	SR 3.3.1.4.3 SR 3.3.1.4.4 SR 3.3.1.4.5	~~NA~~
1d. LPFL Device Actuation.	1,2,3, 4[g],5[g]	1 per actuated device[c]	~~D~~ B	SR 3.3.1.4.2 ~~SR 3.3.1.4.3~~ SR 3.3.1.4.4 SR 3.3.1.4.5	~~NA~~
1e. LPFL Manual Initiation.	1,2,3, 4[g],5[g]	2 per subsystem[d]	~~B, F~~	SR 3.3.1.4.3 SR 3.3.1.4.4 SR 3.3.1.4.7	~~NA~~
2. High Pressure Core Flooder Actuation.					
2a. HPCF Pump Discharge Pressure– High.	1,2,3, 4[g],5[g]	1 per pump[a]	C	SR 3.3.1.4.1 SR 3.3.1.4.3 SR 3.3.1.4.4 SR 3.3.1.4.6	~~≥ [(k)] MPaG~~
2b. HPCF Pump Discharge Flow– Low.	1,2,3, 4[g],5[g]	1 per pump[a]	C	SR 3.3.1.4.1 SR 3.3.1.4.3 SR 3.3.1.4.4 SR 3.3.1.4.6	~~≤ [(k)] liters per min~~
2c. HPCF Pump Suction Pressure– Low	1,2,3, 4[g],5[g]	1 per pump[a]	C	SR 3.3.1.4.1 SR 3.3.1.4.3 SR 3.3.1.4.4 SR 3.3.1.4.6	~~≥ [(k)] MPaG~~
2d. HPCF System Initiation.	1,2,3, 4[g],5[g]	2 per subsystem[b]	~~B, C~~	SR 3.3.1.4.3 SR 3.3.1.4.4 SR 3.3.1.4.5	~~NA~~
2e. HPCF Device Actuation.	1,2,3, 4[g],5[g]	1 per actuated device[c]	~~D~~ B	SR 3.3.1.4.2 ~~SR 3.3.1.4.3~~ SR 3.3.1.4.4 SR 3.3.1.4.5	~~NA~~
2f. HPCF B Manual Initiation.	1,2,3, 4[g],5[g]	2[d]	~~B, F~~	SR 3.3.1.4.3 SR 3.3.1.4.4 SR 3.3.1.4.7	

(continued)

Table 3.3.1.4-1 (Page 2 of 6)
ESF Actuation Instrumentation

FUNCTION	APPLICABLE MODES OR OTHER SPECIFIED CONDITIONS	REQUIRED CHANNELS	APPLICABLE CONDITIONS	SURVEILLANCE REQUIREMENTS	STD DEP16.3-100 ~~ALLOWABLE VALUE~~
2g. HPCF C Diverse Logic Manual Initiation.	1,2,3, 4[g],5[g]	1[d]	D	SR 3.3.1.4.3 SR 3.3.1.4.4 SR 3.3.1.4.7	~~NA~~
3. Reactor Core Isolation Cooling System Actuation.					
3a. RCIC Pump Discharge Pressure– High.	1,2[e],3[e]	1[a]	C	SR 3.3.1.4.1 SR 3.3.1.4.3 SR 3.3.1.4.4 SR 3.3.1.4.6	~~≥ (k)] MPaG~~
3b. RCIC Pump Discharge Flow– Low.	1,2[e],3[e]	1[a]	C	SR 3.3.1.4.1 SR 3.3.1.4.3 SR 3.3.1.4.4 SR 3.3.1.4.6	~~≤ [(k)] liters per min~~
3c. RCIC System Initiation.	1,2[e],3[e]	2[b]	~~B, C~~	SR 3.3.1.4.3 SR 3.3.1.4.4 SR 3.3.1.4.5	~~NA~~
3d. RCIC Device Actuation.	1,2[e],3[e]	1 per actuated device[c]	~~D~~ B	SR 3.3.1.4.2 ~~SR 3.3.1.4.3~~ SR 3.3.1.4.4 SR 3.3.1.4.5	~~NA~~
3e. RCIC Manual Initiation.	1,2[e],3[e]	2[d]	~~B, F~~	SR 3.3.1.4.3 SR 3.3.1.4.4 SR 3.3.1.4.7	~~NA~~
4. Automatic Depressurization System.					
4a. ADS System Initiation.	1, 2[f],3[f]~~,4[f],5[f]~~	2 per subsystem[b]	H, I	SR 3.3.1.4.3 SR 3.3.1.4.4	~~NA~~
4b. ADS Device Actuation.	1, 2[f],3[f]~~,4[f],5[f]~~	2 per ADS valve[c]	H, I	SR 3.3.1.4.2 ~~SR 3.3.1.4.3~~ SR 3.3.1.4.4 SR 3.3.1.4.5	~~NA~~
4c. ADS Manual Initiation.	1, 2[f],3[f]~~,4[f],5[f]~~	2 per subsystem[d]	H, I	SR 3.3.1.4.3 SR 3.3.1.4.4 SR 3.3.1.4.7	~~NA~~
4d. ADS Division I ECCS Pump Discharge Pressure– High (permissive)	1,2[f],3[f]	1 per each of 5 pumps[a]	H, J, K, L, M	SR 3.3.1.4.3 SR 3.3.1.4.4 SR 3.3.1.4.6	~~≥ [(k)] MPaG~~
4e. ADS Division II ECCS Pump Discharge Pressure– High (permissive)	1,2[f],3[f]	1 per each of 5 pumps[a]	H, J, K, L, M	SR 3.3.1.4.3 SR 3.3.1.4.4 SR 3.3.1.4.6	~~≥ [(k)] MPaG~~
4f. ATWS Manual ADS Inhibit.	1,2	2 per subsystem[d]	H, I	SR 3.3.1.4.3 SR 3.3.1.4.4 SR 3.3.1.4.7	~~NA~~

(continued)

Table 3.3.1.4-1 (Page 3 of 6)
ESF Actuation Instrumentation

FUNCTION	APPLICABLE MODES OR OTHER SPECIFIED CONDITIONS	REQUIRED CHANNELS	APPLICABLE CONDITIONS	SURVEILLANCE REQUIREMENTS	STD DEP16.3-100 ~~ALLOWABLE VALUE~~
STD DEP 8.3-1					
5. *Diesel-Generator Actuation.*					
5a. *Division I, II, & III Loss of Voltage –* ~~6.9~~ **4.16** *kV.*	1,2,3, 4[h],5[h]	1 per phase[a]	C	SR 3.3.1.4.1 SR 3.3.1.4.2 SR 3.3.1.4.3 SR 3.3.1.4.4 SR 3.3.1.4.5 SR 3.3.1.4.6	~~≥ [(k)] V and ≤ [(k)] V for ≥ [(k)] s and ≤ [(k)] s~~
5b. *Division I, II, & III Degraded Voltage –* ~~6.9~~ **4.16** *kV.*	1,2,3, 4[h],5[h]	1 per phase[a]	C	SR 3.3.1.4.1 SR 3.3.1.4.2 SR 3.3.1.4.3 SR 3.3.1.4.4 SR 3.3.1.4.5 SR 3.3.1.4.6	~~≥ [(k)] V and ≤ [(k)] V for ≥ [(k)] s and ≤ [(k)] s~~
5c. *DG System Initiation.*	1,2,3, 4[h],5[h]	~~2~~1 per DG[b]	B~~, C~~	SR 3.3.1.4.3 SR 3.3.1.4.4 SR 3.3.1.4.5	~~NA~~
5d. *DG Device Actuation.*	1,2,3, 4[h],5[h]	1 per actuated device[c]	D	SR 3.3.1.4.2 ~~SR 3.3.1.4.3~~ SR 3.3.1.4.4	~~NA~~
5e. *DG Manual Initiation.*	1,2,3, 4[h],5[h]	1 per DG[d]	~~B, F~~	SR 3.3.1.4.3 SR 3.3.1.4.4 SR 3.3.1.4.7	~~NA~~
Standard Supplement - NRC Bulletin 2012-01					
5f. Division I, II, & III Negative Sequence Voltage - 4.16 kV	1,2,3, 4[h],5[h]	1 per bus[a]	C	SR 3.3.1.4.1 SR 3.3.1.4.2 SR 3.3.1.4.3 SR 3.3.1.4.4 SR 3.3.1.4.5 SR 3.3.1.4.6	
6. *Standby Gas Treatment System Actuation.*					
6a. *SGTS Initiation.*	1,2,3 (i)(j)	1 per subsystem[b]	B~~, C~~	SR 3.3.1.4.3 SR 3.3.1.4.4	~~NA~~
6b. *SGTS Device Actuation.*	1,2,3 (i)(j)	1 per actuated device[c]	D	SR 3.3.1.4.2 ~~SR 3.3.1.4.3~~ SR 3.3.1.4.4	
STD DEP 8.3-1					
7. *Reactor Building Cooling Water/Service Water Actuation.*					
7a. *RCW/RSW System Initiation.*	1,2,3, 4[g],5[g]	~~2~~1 per subsystem[b]	B~~, C~~	SR 3.3.1.4.3 SR 3.3.1.4.4	~~NA~~
7b. *RCW/RSW Device Actuation.*	1,2,3, 4[g],5[g]	1 per actuated device[c]	D	SR 3.3.1.4.2 ~~SR 3.3.1.4.3~~ SR 3.3.1.4.4	~~NA~~

(continued)

Table 3.3.1.4-1 (Page 4 of 6)
ESF Actuation Instrumentation

	FUNCTION	APPLICABLE MODES OR OTHER SPECIFIED CONDITIONS	REQUIRED CHANNELS	APPLICABLE CONDITIONS	SURVEILLANCE REQUIREMENTS	STD DEP16.3-100 ~~ALLOWABLE VALUE~~
7c.	RCW/RSW Manual Initiation.	1,2,3, 4[g],5[g]	~~2~~1 per subsystem[d]	~~B, F~~	SR 3.3.1.4.3 SR 3.3.1.4.4 SR 3.3.1.4.7	~~NA~~
7d.	Division I, II, & III Loss of Voltage - ~~6.9~~ **4.16** kV.	1,2,3, 4[h],5[h]	1 per phase[a]	C	SR 3.3.1.4.1 SR 3.3.1.4.2 SR 3.3.1.4.3 SR 3.3.1.4.4 SR 3.3.1.4.5 SR 3.3.1.4.6	~~≥ [(k)] V and ≤ [(k)] V for ≥ [(k)] s and ≤ [(k)] s~~
7e.	Division I, II, & III Degraded Voltage - ~~6.9~~ **4.16** kV.	1,2,3, 4[h],5[h]	1 per phase[a]	C	SR 3.3.1.4.1 SR 3.3.1.4.2 SR 3.3.1.4.3 SR 3.3.1.4.4 SR 3.3.1.4.5 SR 3.3.1.4.6	~~≥ [(k)] V and ≤ [(k)] V for ≥ [(k)] s and ≤ [(k)] s~~
8.	Containment Atmospheric Monitoring.					
8a.	CAM System Initiation.	1,2,3	~~2~~1 per subsystem[b]	~~B, C~~	SR 3.3.1.4.3 SR 3.3.1.4.4	~~NA~~
8b.	AM Device Actuation.	1,2,3	1 per actuated device[c]	D	SR 3.3.1.4.2 ~~SR 3.3.1.4.3~~ SR 3.3.1.4.4	~~NA~~
9.	Suppression Pool Cooling Actuation.					
9a.	SPC System Initiation.	1,2,3, 4[g],5[g]	~~2~~1 per subsystem[b]	~~B, C~~	SR 3.3.1.4.3 SR 3.3.1.4.4	~~NA~~
9b.	SPC Device Actuation.	1,2,3, 4[g], 5[g]	1 per actuated device[c]	D	SR 3.3.1.4.2 ~~SR 3.3.1.4.3~~ SR 3.3.1.4.4	~~NA~~
9c.	SPC Manual Initiation.	1,2,3, 4[g],5[g]	~~2~~1 per subsystem[d]	~~B, F~~	SR 3.3.1.4.3 SR 3.3.1.4.4 SR 3.3.1.4.7	~~NA~~
10.	Containment Isolation Valves Actuation.					
10a.	CIV System Initiation.	1,2,3 ~~(i)(j)~~	1 per division[b]	B	SR 3.3.1.4.3 SR 3.3.1.4.4	~~NA~~
10b.	CIV Device Actuation.	1,2,3 ~~(i)(j)~~	1 per actuated device[c]	D	SR 3.3.1.4.2 SR 3.3.1.4.4	~~NA~~
10c.	Drywell Sump Drain LCW Radiation– High	1,2,3	1[a]	E	SR 3.3.1.4.3 SR 3.3.1.4.4 SR 3.3.1.4.6	~~≤ [(k)] gray~~
10d.	Drywell Sump Drain HCW Radiation– High	1,2,3	1[a]	E	SR 3.3.1.4.3 SR 3.3.1.4.4 SR 3.3.1.4.6	~~≤ [(k)] gray~~

(continued)

Table 3.3.1.4-1 (Page 5 of 6)
ESF Actuation Instrumentation

	FUNCTION	APPLICABLE MODES OR OTHER SPECIFIED CONDITIONS	REQUIRED CHANNELS	APPLICABLE CONDITIONS	SURVEILLANCE REQUIREMENTS	STD DEP16.3-100 ~~ALLOWABLE VALUE~~
	10e. RCW Inside Drywell System Isolation Initiation.	1,2,3	2 per division[b]	B	SR 3.3.1.4.3 SR 3.3.1.4.4	~~NA~~
	10f. RCW Inside Drywell Isolation Device Actuation.	1,2,3	1 per actuated device[c]	D	SR 3.3.1.4.2 SR 3.3.1.4.4	
	10g. Exhaust Air Radiation – High Isolation Initiation.	1,2,3, (i),(j)	1 per division[b]	B	SR 3.3.1.4.3 SR 3.3.1.4.4	
	10h. Exhaust Air Radiation – High Isolation Device Actuation.	1,2,3. (i),(j)	1 per actuated device[c]	D	SR 3.3.1.4.2 SR 3.3.1.4.4	~~5~~
11.	*CIV Divisional Manual Initiation.*	*1,2,3 ~~(i)(j)~~*	*~~2~~1 per division[d]*	*~~B, C~~ F*	*SR 3.3.1.4.3 SR 3.3.1.4.4 SR 3.3.1.4.7*	*~~NA~~*
12.	*Reactor Core Isolation Cooling Isolation Actuation.*					
	12a. RCIC System Isolation Initiation	*1,2,3*	*~~2~~1 per division[b]*	*~~B, C~~*	*SR 3.3.1.4.3 SR 3.3.1.4.4*	*~~NA~~*
	12b. RCIC Isolation Device Actuation.	*1,2,3*	*1 per actuated device[c]*	*D*	*SR 3.3.1.4.2 ~~SR 3.3.1.4.3~~ SR 3.3.1.4.4*	*~~NA~~*
	12c. RCIC Manual Isolation Initiation.	*1,2,3*	*~~2~~1 per division[d]*	*~~B, F~~*	*SR 3.3.1.4.3 SR 3.3.1.4.4 SR 3.3.1.4.7*	*~~NA~~*
	STD DEP T1 2.4-3					
	12d. RCIC Turbine Exhaust ~~Diaphragm~~ Pressure - High..	*1,2,3*	*2 per division [a]*	*I*	*SR 3.3.1.4.1 SR 3.3.1.4.3 SR 3.3.1.4.4 SR 3.3.1.4.6*	*~~≥ [(k)] MPaG~~*
	STD DEP 16.3-94					
13.	*Reactor Water Cleanup Isolation Actuation.*					
	13a. CUW System Isolation Initiation.	*1,2,3 (i)*	*~~2~~1 per division[b]*	*~~B, C~~*	*SR 3.3.1.4.3 SR 3.3.1.4.4*	*~~NA~~*
	13b. CUW Isolation Device Actuation.	*1,2,3 (i)*	*1 per actuated device[c]*	*D*	*SR 3.3.1.4.2 ~~SR 3.3.1.4.3~~ SR 3.3.1.4.4*	*~~NA~~*
	13c. CUW Isolation on SLC Initiation.	*1,2,~~3~~*	*1 per SLC division[a]*	*E*	*SR 3.3.1.4.4*	*~~NA~~*
	STD DEP 16.3-50					
14.	*Shutdown Cooling System Isolation Actuation.*					
	14a. SD Cooling System Isolation Initiation.	1,2,3, (i)	*~~2~~1 per division[b]*	*~~B, C~~*	*SR 3.3.1.4.3 SR 3.3.1.4.4*	*~~NA~~*

(continued)

Table 3.3.1.4-1 (Page 6 of 6)
ESF Actuation Instrumentation

FUNCTION	*APPLICABLE MODES OR OTHER SPECIFIED CONDITIONS*	*REQUIRED CHANNELS*	*APPLICABLE CONDITIONS*	*SURVEILLANCE REQUIREMENTS*	STD DEP16.3-100 ~~*ALLOWABLE VALUE*~~
14b. SD Cooling Isolation Device Actuation.	*1,2,3, (i)*	*1 per actuated device[c]*	*D*	*SR 3.3.1.4.2* ~~*SR 3.3.1.4.3*~~ *SR 3.3.1.4.4*	~~*NA*~~
STD DEP T1 2.4-2 15. Feedwater Line Break Mitigation Actuation.					
15a. Feedwater Line Break Mitigation Initiation.	1,2,3	1 per division[b]	B	SR 3.3.1.4.3 SR 3.3.1.4.4 SR 3.3.1.4.5	~~*NA*~~
15b. Feedwater Line Break Mitigation Device Actuation.	1,2,3	1 per actuated device[c]	B	SR 3.3.1.4.2 SR 3.3.1.4.4 SR 3.3.1.4.5	~~*NA*~~

STD DEP 16.3-86

(a) These are SENSOR CHANNEL Functions.
(b) These are LOGIC CHANNEL Functions.
(c) These are OUTPUT CHANNEL Functions.
(d) These are manual ~~initiation~~ channel Functions.
(e) With reactor pressure greater than 1.03 MPaG.
(f) With reactor pressure greater than 0.343 MPaG.
(g) When associated subsystems are required to be operable.
(h) When associated Diesel-Generator is required to be OPERABLE per LCO 3.8.2 "AC Sources - Shutdown"
(i) During CORE ALTERATIONS and operations with the potential for draining the reactor vessel.
(j) During movement of irradiated fuel assemblies in the secondary containment.

[This page intentionally left blank]

3.3 INSTRUMENTATION

3.3.2.1 Startup Range Monitor (SRNM) Instrumentation

The information in this section of the reference ABWR DCD, including all subsections, is incorporated by reference with no departures, but with the following site-specific supplements. These site specific supplements partially address COL License Information Item 16.1.

SURVEILLANCE REQUIREMENTS (Continued)

SURVEILLANCE		*FREQUENCY*
SR 3.3.2.1.3	----------NOTE---------- *Not required to be met with four or less fuel assemblies adjacent to the SRNM and no other fuel assemblies in the associated core quadrant.* ---------- *Verify count rate is ≥ 3.0 cps.*	*12 hours during CORE ALTERATIONS* *AND* *24 hours*
SR 3.3.2.1.4	*Perform CHANNEL FUNCTIONAL TEST.*	*~~[7]~~ days*
SR 3.3.2.1.5	*Perform CHANNEL FUNCTIONAL TEST*	*~~[31]~~ days*
SR 3.3.2.1.6	----------NOTE---------- *Neutron detectors are excluded.* ---------- *Perform CHANNEL CALIBRATION*	*18 months*

[This page intentionally left blank]

3.3 INSTRUMENTATION

3.3.3.1 Essential ~~Multiplexing System~~ Communication Function *(~~EMS~~*ECF*)*

The information in this section of the reference ABWR DCD, including all subsections, is incorporated by reference with the following departure and site-specific supplements. These site specific supplements partially address COL License Information Item 16.1.

STD DEP T1 3.4-1

*LCO 3.3.3.1 Four divisions of ~~EMS~~*ECF *data transmission shall be OPERABLE.*

ACTIONS

CONDITION	REQUIRED ACTION	COMPLETION TIME
*A. One or more data transmission segments inoperable in one ~~EMS~~*ECF *division with data transmission maintained.*	----------NOTE---------- *LCO 3.0.4 is not applicable.* ---------- *A.1 Restore all data transmission segments to OPERABLE status.*	*Prior to entering MODE 2 following next MODE 4 entry.*
*B. One or more data transmission segments inoperable in two or more ~~EMS~~*ECF *divisions with data transmission maintained in all divisions.*	*B.1 Restore all data transmission segments in at least three ~~EMS~~*ECF *divisions to OPERABLE status.*	*~~[~~30~~]~~ days*
*D. One or more ~~EMS~~*ECF *divisions inoperable.*	----------NOTE---------- *LCO 3.0.4 is not applicable.* ---------- *D.1 Declare affected Functions and supported Features inoperable.*	*4 hours*

SURVEILLANCE REQUIREMENTS

SURVEILLANCE		*FREQUENCY*
SR 3.3.3.1.1	*Verify the required data transmission path segments are OPERABLE.*	*~~[92~~ 31~~]~~ days*
SR 3.3.3.1.2	*Perform a comprehensive network performance test.*	*18 months*

3.3 INSTRUMENTATION

3.3.4.1 Anticipated Transient Without Scram (ATWS) and End-of-Cycle Recirculation Pump Trip (EOC-RPT) Instrumentation

The information in this section of the reference ABWR DCD, including all subsections, is incorporated by reference with the following departure and site-specific supplements. The site specific supplements partially address COL License Information Item 16.1.

STD DEP 16.3-100

LCO 3.3.4.1 *The channels for each Function listed in Table 3.3.4.1-1 shall be OPERABLE.*

APPLICABILITY: *According to Table 3.3.4.1-1.*

----------NOTE----------
Separate Condition entry is allowed for each channel.

ACTIONS

CONDITION	*REQUIRED ACTION*	*COMPLETION TIME*
A. One or more Functions with one inoperable channel.	----------*NOTE*---------- *Applies only to Functions 1, 3, 5, 11, and 14 in Table 3.3.4.1-1.* --- *A.1.1 Place channel(s) in bypass.*	*6 hours*
	AND	
	A.1.2.1 Restore channel(s) to OPERABLE status.	*14 days*
	OR	
	A.1.2.2 Place channel(s) in trip.	*14 days*
	OR	

(continued)

ACTIONS (continued)

CONDITION	*REQUIRED ACTION*	*COMPLETION TIME*
	A.2 Place channel(s) in trip.	*6 hours*
B. One or more Functions with two or more channels inoperable.	*----------NOTE---------- Applies only to Functions 1, 3, 5, 11, and 14 in Table 3.3.4.1-1.* *----------* *B.1 Restore two channels to OPERABLE status.*	 *72 hours*
C. One or more Functions with one channel inoperable.	*----------NOTE---------- Applies only to Functions 2, 4, and 9 in Table 3.3.4.1-1.* *----------* *C.1.1 Place channel(s) in bypass.* *AND* *C.1.2.1 Restore channel(s) to OPERABLE status.* *OR* *C.1.2.2 Place channel(s) in trip.* *OR* *C.2 Place channel(s) in trip.*	 *6 hours* *30 days* *30 days* *6 hours*
D. One or more Functions with two channels inoperable.	*----------NOTE---------- Applies only to Functions 2, 4, and 9 in Table 3.3.4.1-1.* *----------*	

(continued)

ACTIONS (continued)

CONDITION	*REQUIRED ACTION*	*COMPLETION TIME*
	D.1 *Restore one inoperable channel to OPERABLE status.*	*72 hours*
E. One or more Functions with three or more channels inoperable.	*----------NOTE---------- Applies only to Functions 2, 4, and 9 in Table 3.3.4.1-1.* *----------* *E.1* *Restore at least one inoperable channel to OPERABLE status.*	*[24] hours*
F. Required Action and associated Completion Time of Condition C, D, or E not met.	*----------NOTE---------- Applies only to Functions 4 in Table 3.3.4.1-1.* *----------* *F.1* *Apply the MCPR limit for inoperable EOC-RPT as specified in the COLR.* *OR* *F.2* *Reduce power to ≤ 40% RTP.*	*[2] hours* *[2] hours*
G. One or more Functions with one or more channels inoperable.	*----------NOTE---------- Applies only to Functions 6, 7, 8, 10, 12, 13, 15, and 16 in Table 3.3.4.1-1.* *----------* *G.1* *Restore channels to OPERABLE status.*	*[24] hours*

(continued)

ACTIONS (continued)

CONDITION	*REQUIRED ACTION*		*COMPLETION TIME*
H. Required Action and associated Completion Time not met.	*H.1*	*----------NOTE----------* *Applies only to Functions 6, 7, 8, and 16 in Table 3.3.4.1-1.* *----------* *Declare affected Functions and supported Features inoperable*	 *Immediately*
	OR		
	H.2	*----------NOTE----------* *Applies only to Function 1, 2, 3, 5, 9, 10, 12, 13, 14, and 15 in Table 3.3.4.1-1.* *----------* *Be in MODE 3.*	 *12 hours*

SURVEILLANCE REQUIREMENTS

----------NOTE----------
Refer to Table 3.3.4.1-1 to determine the applicability of the SRs to each RPT Function.

SURVEILLANCE		*FREQUENCY*
SR 3.3.4.1.1	*Perform SENSOR CHANNEL CHECK.*	*12 hours*
STD DEP 16.3-100 *SR 3.3.4.1.2*	*Perform CHANNEL FUNCTIONAL TEST* in accordance with TS 5.5.2.11, Setpoint Control Program.	*[~~92~~ 31] days*
STD DEP 16.3-100 *SR 3.3.4.1.3*	*Perform SENSOR CHANNEL CALIBRATION* in accordance with TS 5.5.2.11, Setpoint Control Program.	*18 months*
SR 3.3.4.1.4	*Perform LOGIC SYSTEM FUNCTIONAL TEST.*	*18 months*
SR 3.3.4.1.5	*Verify the RPT SYSTEM RESPONSE TIME is within limits.*	*18 months*
SR 3.3.4.1.6	*Perform COMPREHENSIVE FUNCTIONAL TEST.*	*18 months*
SR 3.3.4.1.7	*Perform CHANNEL FUNCTIONAL TEST*	*7 days*

Table 3.3.4.1-1 (Page 1 of 2)
ATWS and EOC-RPT Instrumentation

FUNCTION	*REQUIRED CHANNELS*	*APPLICABLE MODES OR OTHER SPECIFIED CONDITIONS*	*SURVEILLANCE REQUIREMENTS*	STD DEP 16.3-100 ~~*ALLOWABLE VALUES*~~
1. Feedwater Reactor Vessel Water Level-Low, Level 3.	*3*	*1,2*	*SR 3.3.4.1.1* *SR 3.3.4.1.2* *SR 3.3.4.1.3* *SR 3.3.4.1.4* *SR 3.3.4.1.5*	~~*≥ [(b)] cm*~~
2. Reactor Water Vessel Level-Low, Level 2.	*4*	*1,2*	*SR 3.3.4.1.1* *SR 3.3.4.1.2* *SR 3.3.4.1.3* *SR 3.3.4.1.4* *SR 3.3.4.1.5* *SR 3.3.4.1.6*	~~*≥ [(b)] cm*~~
3. SB&PC Reactor Steam Dome Pressure – High.	*3*	*1,2*	*SR 3.3.4.1.1* *SR 3.3.4.1.2* *SR 3.3.4.1.3* *SR 3.3.4.1.4* *SR 3.3.4.1.5*	~~*≤ [(b)] MPaG*~~
4. EOC-RPT Initiation	*4*	*≥ 40% RTP.*	*SR 3.3.4.1.2* *SR 3.3.4.1.5* *SR 3.3.4.1.6*	~~*NA*~~
5. RPT Trip Initiation Function of the RFC.	*3*	*1,2*	*SR 3.3.4.1.2* *SR 3.3.4.1.4*	~~*NA*~~
6. ASD Pump Trip Actuation.	*1 per ASD*	*1,2*	*SR 3.3.4.1.4*	~~*NA*~~
7. ASD Pump Trip Timers.	*1 per ASD*	*1,2*	*SR 3.3.4.1.3* *SR 3.3.4.1.4*	~~*footnote*~~ ~~(a)~~
8. ASD Pump Trip Load Interruption	*1 per ASD*	*1,2*	*SR 3.3.4.1.4*	~~*NA*~~
9. RPS Scram Follow Signal.	*4*	*1,2*	*SR 3.3.4.1.2* *SR 3.3.4.1.4* *SR 3.3.4.1.6*	~~*NA*~~

Table 3.3.4.1-1 (Page 2 of 2)
ATWS and EOC-RPT Instrumentation

FUNCTION	*REQUIRED CHANNELS*	*APPLICABLE MODES OR OTHER SPECIFIED CONDITIONS*	*SURVEILLANCE REQUIREMENTS*	STD DEP 16.3-100 ~~*ALLOWABLE VALUES*~~
10. Manual ATWS-ARI/SLCS Initiation.	*2*	*1,2*	*SR 3.3.4.1.4* *SR 3.3.4.1.7*	~~*NA*~~
11. ATWS-ARI Trip Initiation Function of the RFC.	*3*	*1,2*	*SR 3.3.4.1.4*	~~*NA*~~
12. ATWS-FMCRD Initiation Function of the RCIS.	*2*	*1,2*	*SR 3.3.4.1.4*	~~*NA*~~
13. FMCRD Insertion Confirmatory Logic.	*1*	*1,2*	*SR 3.3.4.1.4*	
14. ATWS-ARI Valve Actuation.	*3*	*1,2*	*SR 3.3.4.1.4*	~~*NA*~~
15. FMCRD Emergency Insertion Invertor Control Logic.	*1 per rod*	*1,2*	*SR 3.3.4.1.4*	~~*NA*~~
16. Recirculation Runback.	*1 per pump*	*1,2*	*SR 3.3.4.1.4*	~~*NA*~~

~~*(a) ≤ [0] seconds for RIPs [A, D, F, J, B, E, & H] and ≤ [6] seconds for RIPs [C, G, & K].*~~

[This page intentionally left blank]

3.3 INSTRUMENTATION

3.3.4.2 Feedwater Pump and Main Turbine Trip Instrumentation

The information in this section of the reference ABWR DCD, including all subsections, is incorporated by reference with the following departure and site-specific supplements. The site-specific supplements partially address COL License Information Item 16.1.

STD DEP 16.3-97
STD DEP 16.3-100

LCO 3.3.4.2 *Three channels of feedwater pump and main turbine trip instrumentation shall be OPERABLE.*

ACTIONS

CONDITION	*REQUIRED ACTION*	*COMPLETION TIME*
A. One feedwater pump and main turbine trip channel inoperable.	*A.1 Place channel in trip.*	*6 hours*
	OR	
	A.2.1 Place channel in bypass.	*6 hours*
	AND	
	A.2.2.1 Restore channel to OPERABLE status.	*14 days*
	OR	
	A.2.2.2 Place channel in trip.	*14 days*
B. Two or more feedwater pump and main turbine trip channels inoperable.	*B.1 Restore two channels to OPERABLE status.*	*72 hours*

SURVEILLANCE REQUIREMENTS

SURVEILLANCE		*FREQUENCY*
SR 3.3.4.2.1	*Perform SENSOR CHANNEL CHECK*.	*24 hours*
STD DEP 16.3-100 *SR 3.3.4.2.2*	*Perform CHANNEL FUNCTIONAL TEST* in accordance with TS 5.5.2.11, Setpoint Control Program.	*[~~92~~ 31] days*
STD DEP 16.3-100 *SR 3.3.4.2.3*	*Perform SENSOR CHANNEL CALIBRATION* in accordance with TS 5.5.2.11, Setpoint Control Program. ~~*The allowable value shall be ≤ [ ] inches.*~~	*18 months*
SR 3.3.4.2.4	*Perform LOGIC SYSTEM FUNCTIONAL TEST including [~~valve~~] actuation.*	*18 months*

3.3 INSTRUMENTATION

3.3.5.1 Control Rod Block Instrumentation

The information in this section of the reference ABWR DCD, including all subsections, is incorporated by reference with the following departures and site-specific supplements. The site specific supplements partially address COL License Information Item 16.1.

LCO 3.3.5.1 *The control rod block instrumentation for each Function in Table 3.3.5.1-1 shall be OPERABLE.*

APPLICABILITY: *According to Table 3.3.5.1-1.*

STD DEP 16.3-64
STD DEP 16.3-65

ACTIONS

CONDITION	*REQUIRED ACTION*	*COMPLETION TIME*
A. One Automated Thermal Limit Monitor (ATLM) channel inoperable.	*A.1 Restore channel to OPERABLE status.*	*[72] hours*
	OR	
	A.2 Verify the thermal limits are met.	*4 hours* *AND* *Once per 4 hours thereafter*
STD DEP 16.3-64 *B. Two ATLM channels inoperable.*	*----------NOTE----------* *Removal of ATLM block under administrative control is permitted provided manual control of rod movement and thermal limits are verified by a second licensed operator.* *----------* *B.1 Insert an ATLM block.* *AND*	 *Immediately*

(continued)

ACTIONS (continued)

CONDITION	*REQUIRED ACTION*		*COMPLETION TIME*
(continued)	*B.2*	*Verify RCIS blocks control rod movement by attempting to withdraw one rod or one gang ~~or~~ of rods.*	*4 hours* *AND* *Once per 4 hours thereafter*
C. One Rod Worth Minimizer (RWM) channel inoperable.	*C.1*	*Restore channel to OPERABLE status.*	*~~[~~72~~]~~ Hours*
D. Two RWM channels inoperable *OR* *Required Actions and associated Completion Time of Condition C not met.*	*D.1*	*Suspend control rod movement, except by scram.*	*Immediately*
E. One or more Reactor Mode Switch– Shutdown Position channels inoperable.	*E.1*	*Suspend control rod withdrawal.*	*Immediately*
	AND		
	E.2	*Initiate action to fully insert all insertable control rods in core cells containing one or more fuel assemblies.*	*Immediately*

SURVEILLANCE REQUIREMENTS

----------NOTE----------
Refer to Table 3.3.5.1-1 to determine which SRs apply for each Control Rod Block Function.

SURVEILLANCE		*FREQUENCY*
STD DEP 16.3-65		
SR 3.3.5.1.1	----------NOTE---------- *Not required to be performed until 1 hour after THERMAL POWER is > [~~10~~ 30]% RTP.* --- *Perform CHANNEL FUNCTIONAL TEST.*	*[~~92~~ 31] days*
SR 3.3.5.1.2	----------NOTE---------- *Not required to be performed until 1 hour after any control rod is withdrawn in MODE 2* --- *Perform CHANNEL FUNCTIONAL TEST.*	*[~~92~~ 31] days*
SR 3.3.5.1.3	*Verify the RWM is not bypassed when THERMAL POWER is ≤ [~~10~~] % RTP.*	*18 months*
SR 3.3.5.1.4	*Verify the ATLM is not bypassed when THERMAL POWER is ≥ [~~30~~] % RTP.*	*18 months*
SR 3.3.5.1.5	----------NOTE---------- *Not required to be performed until 1 hour after reactor mode switch is in the shutdown position.* --- *Perform CHANNEL FUNCTIONAL TEST.*	*18 months*
SR 3.3.5.1.6	*Perform CHANNEL CHECK of process parameter and setpoint inputs to the ATLM.*	*[~~24~~] hours*
SR 3.3.5.1.7	*Verify the bypassing and movement of control rods required to be bypassed in the Rod Action and Position Information (RAPI) Subsystem by a second licensed operator or other qualified member of the technical staff.*	*Prior to and during movement of control rods bypassed in the RAPI Subsystem*

Table 3.3.5.1-1 (page 1 of 1)
Control Rod Block Instrumentation

FUNCTION	APPLICABLE MODES OR OTHER SPECIFIED CONDITIONS	REQUIRED CHANNELS	SURVEILLANCE REQUIREMENTS
1. Rod Control & Information System			
a. Automated Thermal Limit Monitor	[(a)]	2	SR 3.3.5.1.1 SR 3.3.5.1.4 SR 3.3.5.1.6
b. Rod Worth Minimizer	1[(b)], 2[(b)]	2	SR 3.3.5.1.2 SR 3.3.5.1.3
2. Reactor Mode Switch–Shutdown Position	(c)	4	SR 3.3.5.1.5

(a) THERMAL POWER > [30] % RTP.

(b) With THERMAL POWER ≤ [10] % RTP.

(c) Reactor mode switch in the shutdown position.

3.3 INSTRUMENTATION

3.3.6.1 Post Accident Monitoring (PAM) Instrumentation

The information in this section of the reference ABWR DCD, including all subsections, is incorporated by reference with the following departures and site-specific supplements. The site specific supplements partially address COL License Information Item 16.1.

STD DEP T1 2.3-1
STD DEP T1 2.14-1
STD DEP 7.5-1
STD DEP 16.3-78

STD DEP T1 2.14-1

ACTIONS

CONDITION	*REQUIRED ACTION*	*COMPLETION TIME*
C. One or more Functions with two required channels inoperable.	----------NOTE---------- ~~*This Action is not applicable to Functions 11 and 12.*~~ ---------- *C.1 Restore at least one inoperable channel to OPERABLE status.*	*7 days*
~~*D. Two required hydrogen/oxygen monitor channels inoperable*~~	~~*D.1 Restore one required hydrogen/oxygen monitor channel to OPERABLE status*~~	~~*72 hours*~~
D. ~~E.~~ Required Action and associated Completion Time of Condition C not met	*D.1 ~~E.1~~ Enter the Condition referenced in Table 3.3.6.1-1 for the channel.*	*Immediately*

CONDITION	REQUIRED ACTION	COMPLETION TIME
E. ~~F.~~ As required by Required Action ~~E~~D.1 and referenced in Table 3.3.6.1-1.	E.1 ~~F.1~~ Be in MODE 3.	12 hours
F. ~~G.~~ As required by Required Action ~~E~~D.1 and referenced in Table 3.3.6.1-1.	F.1 ~~G.1~~ Provide alternate method of monitoring, determine the cause of the inoperability, and submit plans and schedule for restoring the instrumentation channels of the Functions to OPERABLE status to the NRC.	14 days

SURVEILLANCE REQUIREMENTS

----------NOTES----------
1. These SRs apply to each Function in Table 3.3.6.1-1.

2. SR 3.3.6.1.1 does not apply to Function 8.

SURVEILLANCE		FREQUENCY
SR 3.3.6.1.1	Perform CHANNEL CHECK.	~~[~~31~~]~~ days
	----------NOTE---------- Neutron detectors are excluded. ----------	
SR 3.3.6.1.2	Perform CHANNEL CALIBRATION.	18 months

STD DEP T1 2.14-1
STD DEP T1 2.3-1
STD DEP 7.5-1
STD DEP 16.3-78

Table 3.3.6.1-1 (page 1 of 1)
Post Accident Monitoring Instrumentation

	FUNCTION	REQUIRED CHANNELS	CONDITIONS REFERENCED FROM REQUIRED ACTION E.1
1.	Reactor Steam Dome Pressure.	2	~~F~~E
2.	Reactor Vessel Water Level - Wide Range.	2	~~F~~E
3.	Reactor Vessel Water Level - Fuel Zone.	2	~~F~~E
4.	Suppression Pool Water Level.	2	~~F~~E
5.	Containment Pressure.		
	5a. Drywell Pressure.	2	~~F~~E
	5b. ~~*Wide Range Containment*~~ Wetwell Pressure.	2	~~F~~E
6.	Drywell Area Radiation.	2	~~G~~F
7.	Wetwell Area Radiation.	2	~~G~~F
8.	PCIV Position.	2 per penetration flow path [(a),(b)]	~~F~~E
9.	Startup Range Neutron Monitor - Neutron Flux.	2[(c)]	~~F~~E
10.	Average Power Range Monitor - Neutron Flux.	2[(d)]	~~F~~E
~~*11.*~~	~~*Containment Atmospheric Monitors - Drywell H_2 & O_2 Analyzer.*~~	~~*2*~~	~~*F*~~
~~*12.*~~	~~*Containment Atmospheric Monitors - Wetwell H_2 & O_2 Analyzer.*~~	~~*2*~~	~~*F*~~
~~*13.*~~	~~*Containment Water Level.*~~	~~*2*~~	~~*F*~~
11.	~~*14.*~~ Suppression Pool Water Temperature.	2[(e)]	~~F~~E
12.	~~*15.*~~ Drywell Atmosphere Temperature.	2	~~F~~E
~~*16.*~~	~~*Main Steam Line Radiation.*~~	~~*2*~~	~~*F*~~
13.	Wetwell Atmosphere Temperature.	2	E

a. Only one position indication channel is required for penetration flow paths with only one installed control room indication channel.

b. Not required for isolation valves whose associated penetration flow path is isolated by at least one closed and de-activated automatic valve, closed manual valve, blind flange, or check valve with flow through the valve secured.

c. When power is ≤ [10] % RTP

d. When power is > [10] % RTP

e. Bulk average temperature.

3.3 INSTRUMENTATION

3.3.6.2 Remote Shutdown System

The information in this section of the reference ABWR DCD, including all subsections, is incorporated by reference with the following departures and site-specific supplements. The site specific supplements partially address COL License Information Item 16.1.

STD DEP T1 2.14-1
STD DEP 16.3-59
STD DEP 16.3-60

SURVEILLANCE REQUIREMENTS

SURVEILLANCE		*FREQUENCY*
SR 3.3.6.2.1	*Perform CHANNEL CHECK for each required instrumentation channel.*	*~~[~~31~~]~~ days*
SR 3.3.6.2.2	*Verify each required control circuit and transfer switch is capable of performing the intended functions.*	*18 months*
SR 3.3.6.2.3	*Perform CHANNEL CALIBRATION for each required instrumentation channel.*	*18 months*

Table 3.3.6.2-1 (Page 1 of 2)
Remote Shutdown System Instrumentation

	FUNCTION (INSTRUMENT OR CONTROL PARAMETER)	*REQUIRED NUMBER OF DIVISIONS*
1.	*Reactor Steam Dome Pressure.*	*2*
2.	*HPCF B Flow.*	*1*
3.	*HPCF B Controls.*	*1(c)*
4.	*HPCF B Pump Discharge Pressure.*	*1*
5.	*RHR Flow.*	*2(a)*
6.	*RHR Hx Inlet Temperature.*	*2(a)*
7.	*RHR Hx Outlet Temperature.*	*2(a)*
8.	*RHR Hx Bypass Valve Position.*	*2(a)*
9.	*RHR Hx Outlet Valve Position.*	*2(a)*
10.	*RHR Pump Discharge Pressure.*	*2(a)*
11.	*RHR Controls.*	*2(a)(c)*

Table 3.3.6.2-1 (Page 2 of 2)
Remote Shutdown System Instrumentation

FUNCTION (INSTRUMENT OR CONTROL PARAMETER)	*REQUIRED NUMBER OF DIVISIONS*
	(continued)
12. RPV Wide Range Water Level.	*2*
STD DEP 16.3-59	
13. RPV ~~Narrow~~ Shutdown *Range Water Level.*	*2*
14. Reactor Building Cooling Water Flow.	*2*
15. Reactor Building Cooling Water Controls.	*2(c)*
16. Reactor Building Service Water System Controls.	*2(c)*
STD DEP T1 2.14-1 STD DEP 16.3-60	
17. ~~Cooling Water Flow to Flammability Control System~~ RSW Strainer Differential Pressure.	*~~1~~2*
18. Suppression Pool Water Level.	*2*
19. Condensate Storage Tank Water Level.	*1*
20. Suppression Pool Temperature.	*2*
21. Electric Power Distribution Controls .	*2(c)*
22. Diesel Generator Interlock and Monitors.	*2*
23. SRV Controls.	*(b)(c)*

a. RHR A for division I RSS panel, RHR B for division II RSS panel.
b. Three on the Division I RSS, 1 on division II RSS.
c. The specified number of channels are required t o be OPERABLE for each device that can be controlled from the RSS panels.

3.3 INSTRUMENTATION

3.3.7.1 Control Room Habitability Area (CRHA) Emergency Filtration (EF) System Instrumentation

The information in this section of the reference ABWR DCD, including all subsections, is incorporated by reference with the following departures and site-specific supplements. These site specific supplements partially address COL License Information Item 16.1.

STD DEP 16.3-61
STD DEP 16.3-100

SURVEILLANCE REQUIREMENTS

----------NOTE----------
Refer to Table 3.3.7.1-1 to determine which SRs apply for each Function.

SURVEILLANCE		*FREQUENCY*
SR 3.3.7.1.1	*Perform CHANNEL CHECK.*	*[~~24~~ 12] hours*
STD DEP 16.3-100 *SR 3.3.7.1.2*	*Perform CHANNEL FUNCTIONAL TEST* in accordance with TS 5.5.2.11, Setpoint Control Program.	*[~~92~~ 31] days*
STD DEP 16.3-100 *SR 3.3.7.1.3*	*Perform CHANNEL CALIBRATION* in accordance with TS 5.5.2.11, Setpoint Control Program.	*18 months*
SR 3.3.7.1.4	*Perform LOGIC SYSTEM FUNCTIONAL TEST.*	*18 months*

Table 3.3.7.1-1 (Page 1 of 1)

Control Room Habitability Area - Emergency Filtration System Instrumentation

FUNCTION	*REQUIRED CHANNELS*	*SURVEILLANCE REQUIREMENTS*	STD DEP 16.3-100 ~~*ALLOWABLE VALUE*~~
1. Control Room Ventilation Radiation Monitors	*4 per EF division*	*SR 3.3.7.1.1* *SR 3.3.7.1.2* *SR 3.3.7.1.3* *SR 3.3.7.1.4*	~~*≤ [(a)] mGy/h*~~
2. Emergency Filtration System Low Flow	*2 per EF division*	*SR 3.3.7.1.2* *SR 3.3.7.1.3* *SR 3.3.7.1.4*	~~*≤ [(a)] kg/h*~~
3. Emergency Filtration System Manual Switch	*1 per EF division*	*SR 3.3.7.1.2* *SR 3.3.7.1.4*	~~*N/A*~~

STD DEP 16.3-61

~~*(a) During operations with a potential for draining the reactor vessel.*~~

~~*(b) During movement of irradiated fuel assemblies in the secondary containment.*~~

3.3 INSTRUMENTATION

3.3.8.1 Electric Power Monitoring

The information in this section of the reference ABWR DCD, including all subsections, is incorporated by reference with the following departures and site-specific supplements. These site specific supplements partially address COL License Information Item 16.1.

STD DEP 16.3-97
STD DEP 16.3-100

SURVEILLANCE REQUIREMENTS

SURVEILLANCE		*FREQUENCY*
STD DEP 16.3-100 *SR 3.3.8.1.1*	*Perform CHANNEL FUNCTIONAL TEST* in accordance with TS 5.5.2.11, Setpoint Control Program.	*~~[92~~* 31*~~]~~ days*
STD DEP 16.3-97 STD DEP 16.3-100 *SR 3.3.8.1.2*	*Perform CHANNEL CALIBRATION* in accordance with TS 5.5.2.11, Setpoint Control Program. *~~The Allowable Values for Divisions I, II, III and IV shall be:~~* *~~a. Undervoltage: ≤ [108] VAC.~~* *~~b. Overvoltage: ≥ [132] VAC.~~* *~~c. Underfrequency: ≤ [57] Hz.~~* *~~d. Overfrequency: ≥ [63] Hz.~~*	*~~[92~~* 18*~~] days~~* months
SR 3.3.8.1.3	*Perform SYSTEM FUNCTIONAL TEST.*	*18 months*

[This page intentionally left blank]

3.3 INSTRUMENTATION

3.3.8.2 Reactor Coolant Temperature Monitoring - Shutdown

The information in this section of the reference ABWR DCD, including all subsections, is incorporated by reference with no departures, but the following site-specific supplements. These site specific supplements partially address COL License Information Item 16.1.

SURVEILLANCE REQUIREMENTS

SURVEILLANCE		*FREQUENCY*
SR 3.3.8.2.1	*Perform CHANNEL CHECK.*	*~~[7]~~ days*
SR 3.3.8.2.2	*Perform CHANNEL FUNCTIONAL TEST.*	*~~[92~~ 31~~]~~ days*
SR 3.3.8.2.3	*Perform CHANNEL CALIBRATION.*	*18 months*

[This page intentionally left blank]

3.4 REACTOR COOLANT SYSTEM (RCS)

3.4.1 Reactor Internal Pumps (RIPs) - Operating

The information in this section of the reference ABWR DCD, including all subsections, is incorporated by reference with the following departures and site-specific supplements. These site specific supplements partially address COL License Information Item 16.1.

STD DEP 16.3-5
STD DEP 16.3-96

STD DEP 16.3-96

LCO 3.4.1 *At least nine RIPS shall be in operation.*

~~*[OR*~~

~~*[ ] RIPs may be in operation provided the following limits are applied when the associated LC0 is applicable:*~~

~~*a. LC0 3.2.1, "AVERAGE PLANAR LINEAR HEAT GENERATION RATE (APLHGR)," limits specified in the COLR for [ ] RIPs in operation; and*~~

~~*b. LC0 3.2.2, "Minimum CRITICAL POWER RATIO (MCPR)," limits specified in the COLR for [ ] RIPs in operation; and*~~

~~*c. LC0 3.3.1.1, "SSLC Sensor Instrumentation," Function 2.b (Average Power Range Monitors Flow Biased Simulated Thermal Power - High), Allowable Value of Table 3.3.1.1-1 is reset for operation with [ ] RIPs.]*~~

APPLICABILITY: *MODES 1 and 2.*

STD DEP 16.3-5

SURVEILLANCE REQUIREMENTS

SURVEILLANCE		*FREQUENCY*
SR 3.4.1.1	*Verify at least the required number of RIPs ~~are~~* is ~~*OPERABLE*~~ operating *at any THERMAL POWER level.*	*24 hours*

[This page intentionally left blank]

3.4 REACTOR COOLANT SYSTEM (RCS)

3.4.2 Safety/Relief Valves (S/RVs)

The information in this section of the reference ABWR DCD, including all subsections, is incorporated by reference with no departures or supplements.

[This page intentionally left blank]

3.4 REACTOR COOLANT SYSTEM (RCS)

3.4.3 RCS Operational LEAKAGE

The information in this section of the reference ABWR DCD, including all subsections, is incorporated by reference with the following departure.

STD DEP 7.3-12

LCO 3.4.3 *RCS operational LEAKAGE shall be limited to:*

a. No pressure boundary LEAKAGE;

b. *≤ ~~3.785~~* 19 *L/min unidentified LEAKAGE;*

c. *≤ ~~98.4~~* 114 *L/min total LEAKAGE averaged over the previous 24 hour period; and*

[This page intentionally left blank]

3.4 REACTOR COOLANT SYSTEM (RCS)

3.4.4 RCS Pressure Isolation Valve (PIV) Leakage

The information in this section of the reference ABWR DCD, including all subsections, is incorporated by reference with no departures or supplements.

[This page intentionally left blank]

3.4 REACTOR COOLANT SYSTEM (RCS)

3.4.5 RCS Leakage Detection Instrumentation

The information in this section of the reference ABWR DCD, including all subsections, is incorporated by reference with no departures or supplements.

[This page intentionally left blank]

3.4 REACTOR COOLANT SYSTEM (RCS)

3.4.6 RCS Specific Activity

The information in this section of the reference ABWR DCD, including all subsections, is incorporated by reference with no departures or supplements.

[This page intentionally left blank]

3.4 REACTOR COOLANT SYSTEM (RCS)

3.4.7 Residual Heat Removal (RHR) Shutdown Cooling System – Hot Shutdown

The information in this section of the reference ABWR DCD, including all subsections, is incorporated by reference with no departures or supplements.

[This page intentionally left blank]

3.4 REACTOR COOLANT SYSTEM (RCS)

3.4.8 Residual Heat Removal (RHR) Shutdown Cooling System – Cold Shutdown

The information in this section of the reference ABWR DCD, including all subsections, is incorporated by reference with no departures or supplements.

[This page intentionally left blank]

3.4 REACTOR COOLANT SYSTEM (RCS)

3.4.9 RCS Pressure and Temperature (P/T) Limits

The information in this section of the reference ABWR DCD, including all subsections, is incorporated by reference with no departures and the following site-specific supplements. The site-specific supplements partially address COL License Information Item 16.1.

SURVEILLANCE REQUIREMENTS

SURVEILLANCE		*FREQUENCY*
SR 3.4.9.4	----------NOTE---------- *Not required to be performed until 30 minutes after RCS temperature ≤ ~~[~~27°C~~]~~ in MODE 4.* ---------- *Verify reactor vessel flange and head flange temperatures are within the limits specified in the PTLR.*	*30 minutes*
SR 3.4.9.5	----------NOTE---------- *Not required to be performed until 12 hours after RCS temperature ≤ ~~[~~38°C~~]~~ in MODE 4.* ---------- *Verify reactor vessel flange and head flange temperatures are within the limits specified in the PTLR.*	*12 hours*

[This page intentionally left blank]

3.4 REACTOR COOLANT SYSTEM (RCS)

3.4.10 Reactor Steam Dome Pressure

The information in this section of the reference ABWR DCD, including all subsections, is incorporated by reference with no departures or supplements.

[This page intentionally left blank]

3.5 EMERGENCY CORE COOLING SYSTEMS (ECCS)

3.5.1 ECCS – Operating

The information in this section of the reference ABWR DCD, including all subsections, is incorporated by reference with the following departure.

STD DEP 8.3-1

ACTIONS

CONDITION	*REQUIRED ACTION*		*COMPLETION TIME*
B. RCIC inoperable. *OR* *RCIC and any one other ECCS subsystem inoperable.*	B.1.1	*Verify the CTG is functional by verifying the CTG starts and achieves steady state voltage and frequency ~~within 2~~ in less than 10 minutes.* *AND*	*7 days*
	B.1.2	*Verify the CTG circuit breakers are capable of being aligned to each of the ESF buses*	*7 days* *AND* *Once per 8 hours thereafter*
	OR		
	B.2	*Verify the ACIWA mode of RHR(C) subsystem is functional.*	*7 days*
	AND		
	B.3	*Restore ECCS subsystem(s) to OPERABLE status.*	*14 days*

ACTIONS (continued)

CONDITION	*REQUIRED ACTION*	*COMPLETION TIME*
C. RCIC and any other two ECCS subsystems inoperable provided at least one HPCF subsystem is OPERABLE.	*C.1.1.1 Verify the CTG is functional by verifying the CTG starts and achieves steady state voltage and frequency ~~within 2~~* in less than 10 minutes.	*72 hours*
	AND	
	C.1.1.2 Verify the CTG circuit breakers are capable of being aligned to each of the ESF buses.	*72 hours* *AND* *Once per 8 hours thereafter*
	OR	
	C.1.2 Verify the ACIWA mode of RHR(C) subsystem is functional.	*72 hours*
	AND	
	C.2 Restore one ECCS subsystem to OPERABLE status.	*7 days*

3.5 EMERGENCY CORE COOLING SYSTEMS (ECCS)

3.5.2 ECCS – Shutdown

The information in this section of the reference ABWR DCD, including all subsections, is incorporated by reference with the following departure and site-specific supplement. The site-specific supplement partially addresses COL License Information Item 16.1.

STD DEP 16.3-97

SURVEILLANCE REQUIREMENTS (continued)

SURVEILLANCE		*FREQUENCY*
SR 3.5.2.2	*Verify, for the required High Pressure Core Flooder (HPCF) subsystem, the:* *a. Suppression pool water level is ≥ 7.0 m, or* *b. Condensate storage tank water level is ≥ ~~[~~ 5.4 ~~m~~ ~~]~~ m.*	*12 hours*
SR 3.5.2.3	*Verify, for each required ECCS subsystem, the piping is filled with water from the pump discharge valve to the injection valve.*	*31 days*
SR 3.5.2.4	*----------NOTE----------* *Low Pressure Core Flooder (LPFL) subsystem may be considered OPERABLE during alignment and operation in the decay heat removal shutdown cooling mode, if capable of being manually realigned and not otherwise inoperable.* *----------* *Verify each required ECCS subsystem manual, power operated, and automatic valve in the flow path, that is not locked, sealed, or otherwise secured in position, is in the correct position.*	 *31 days*

(continued)

[This page intentionally left blank]

3.6 CONTAINMENT SYSTEMS

3.6.1.1 Primary Containment

The information in this section of the reference ABWR DCD, including all subsections, is incorporated by reference with no departures or supplements.

[This page intentionally left blank]

3.6 CONTAINMENT SYSTEMS

3.6.1.2 Primary Containment Air Locks

The information in this section of the reference ABWR DCD, including all subsections, is incorporated by reference with the following departure and site-specific supplement. The site-specific supplement partially addresses COL License Information Item 16.1.

STD DEP 16.3-69

CONDITION	*REQUIRED ACTION*	*COMPLETION TIME*
B. One or more primary containment air locks with primary containment air lock interlock mechanism inoperable.	----------NOTE---------- *1. Required Actions B.1, B.2, and B.3 are not applicable if both doors in the same air lock are inoperable and Condition C is entered.* *2. Entry into and exit from containment is permissible under the control of a dedicated individual.* ---------- *B.1 Verify an OPERABLE door is closed in the affected air lock(s).* *AND* *B.2 Lock an OPERABLE door closed in the affected air lock(s).* *AND*	 *1 hour* *24 hours*

CONDITION	REQUIRED ACTION	COMPLETION TIME
B. (Continued)	B.3 ----------NOTE---------- Air lock doors in high radiation areas or areas with limited access due to inerting may be verified locked closed by administrative means. ----------	
	Verify an OPERABLE door is locked closed in the affected air lock(s).	Once per 31 days

SURVEILLANCE REQUIREMENTS

SURVEILLANCE		FREQUENCY
SR 3.6.1.2.1	----------NOTES---------- 1. An inoperable air lock door does not invalidate the previous successful performance of the overall air lock leakage test 2. Results shall be evaluated against acceptance criteria of SR 3.6.1.1.1 in accordance with 10 CFR 50, Appendix J, as modified by approved exemptions. ----------	
	Perform required primary containment air lock leakage rate testing in accordance with 10 CFR 50, Appendix J, as modified by approved exemptions. The acceptance criteria for air lock testing are: a. Overall air lock leakage rate is $\leq 0.05\ L_a$ when tested at $\geq P_a$. b. For each door, leakage rate is $\leq 0.01\ L_a$ when the gap between the door seals is pressurized to $\geq$ [0.0689] MPaG for at least 15 minutes.	----------NOTE---------- SR 3.0.2 is not applicable ---------- In accordance with 10 CFR 50, Appendix J, as modified by approved exemptions

3.6 CONTAINMENT SYSTEMS

3.6.1.3 Primary Containment Isolation Valves (PCIVs)

The information in this section of the reference ABWR DCD, including all subsections, is incorporated by reference with no departures and the following site-specific supplements. The site-specific supplements partially address COL License Information Item 16.1.

ACTIONS

CONDITION	*REQUIRED ACTION*		*COMPLETION TIME*
D. One or more penetration flow paths with one or more containment purge valves not within purge valve leakage limits.	*D.1*	*Isolate the affected penetration flow path by use of at least one [closed and deactivated automatic valve, closed manual valve, or blind flange].*	*24 hours*
	AND		
	D.2	*----------NOTE---------- Valves and blind flanges in high radiation areas may be verified by use of administrative means. ----------*	
		Verify the affected penetration flow path is isolated.	*Once per 31 days for isolation devices outside containment* *AND* *Prior to entering MODE 4 from MODE 5 if not performed within the previous 92 days for isolation devices inside containment*
	AND		
	D.3	*Perform SR 3.6.1.3.7 for the resilient seal purge valves closed to comply with Required Action D.1.*	*Once per [92] days*

SURVEILLANCE REQUIREMENTS

SURVEILLANCE		FREQUENCY
SR 3.6.1.3.7	*----------NOTES----------* *1. Only required to be met in MODES 1, 2, and 3.* *2. Results shall be evaluated against acceptance criteria of SR 3.6.1.1.1 in accordance with 10 CFR 50, Appendix J, as modified by approved exemptions.* *----------* *Perform leakage rate testing for each primary containment purge valve with resilient seals*	*184 days* *AND* *Once within 92 days after opening the valve*
~~*SR 3.6.1.3.14*~~	*----------NOTE----------* ~~*Only required to be met in MODES 1, 2, and 3.*~~ ~~*Verify each [550 mm] primary containment purge valve is blocked to restrict the valve from opening > [50]%.*~~	~~*18 months*~~

3.6 CONTAINMENT SYSTEMS

3.6.1.4 Drywell Pressure

The information in this section of the reference ABWR DCD, including all subsections, is incorporated by reference with no departures or supplements.

[This page intentionally left blank]

3.6 CONTAINMENT SYSTEMS

3.6.1.5 Drywell Air Temperature

The information in this section of the reference ABWR DCD, including all subsections, is incorporated by reference with no departures or supplements.

[This page intentionally left blank]

3.6 CONTAINMENT SYSTEMS

3.6.1.6 Wetwell-to-Drywell Vacuum Breakers

The information in this section of the reference ABWR DCD, including all subsections, is incorporated by reference with no departures or supplements.

[This page intentionally left blank]

3.6 CONTAINMENT SYSTEMS

3.6.2.1 Suppression Pool Average Temperature

The information in this section of the reference ABWR DCD, including all subsections, is incorporated by reference with the following departure.

STD DEP 16.3-32

ACTIONS

CONDITION	*REQUIRED ACTION*		*COMPLETION TIME*
D. *Suppression pool average temperature > 43.3°C~~ but ≤ 48.9°C~~.*	D.1	*~~Verify~~ Determine suppression pool average temperature~~ is ≤ 48.9°C~~.*	*Once per 30 minutes*
	AND		
	D.2	Be in MODE 4.	36 hours
E. *Suppression pool average temperature > 48.9°C.*	*E.1*	*Depressurize the reactor vessel to < 1.38 MPaG.*	*12 hours*
	~~AND~~		
	~~E.2~~	*~~Be in MODE 4.~~*	*~~36 hours~~*

[This page intentionally left blank]

3.6 CONTAINMENT SYSTEMS

3.6.2.2 Suppression Pool Water Level

The information in this section of the reference ABWR DCD, including all subsections, is incorporated by reference with no departures or supplements.

[This page intentionally left blank]

3.6 CONTAINMENT SYSTEMS

3.6.2.3 Residual Heat Removal (RHR) Suppression Pool Cooling

The information in this section of the reference ABWR DCD, including all subsections, is incorporated by reference with no departures or supplements.

[This page intentionally left blank]

3.6 CONTAINMENT SYSTEMS

3.6.2.4 Residual Heat Removal (RHR) Containment Spray

The information in this section of the reference ABWR DCD, including all subsections, is incorporated by reference with no departures or supplements.

[This page intentionally left blank]

3.6 CONTAINMENT SYSTEMS

3.6.3.1 Primary Containment Hydrogen Recombiners

The information in this section of the reference ABWR DCD, including all subsections, is deleted in accordance with the following departure.

STD DEP T1 2.14-1

Not Used.

[This page intentionally left blank]

3.6 CONTAINMENT SYSTEMS

3.6.3.2 Primary Containment Oxygen Concentration

The information in this section of the reference ABWR DCD, including all subsections, is incorporated by reference with no departures or supplements.

[This page intentionally left blank]

3.6 CONTAINMENT SYSTEMS

3.6.4.1 Secondary Containment

The information in this section of the reference ABWR DCD, including all subsections, is incorporated by reference with the following departure.

STD DEP 16.3-29

SURVEILLANCE REQUIREMENTS

SURVEILLANCE		*FREQUENCY*
SR 3.6.4.1.4	*Verify each standby gas treatment (SGT) subsystem will draw down the secondary containment to ≥ 6.4 mm water gauge vacuum in ≤ ~~120 seconds~~* 20 minutes*.*	*18 months on a STAGGERED TEST BASIS*

[This page intentionally left blank]

3.6 CONTAINMENT SYSTEMS

3.6.4.2 Secondary Containment Isolation Valves (SCIVs)

The information in this section of the reference ABWR DCD, including all subsections, is incorporated by reference with no departures or supplements.

[This page intentionally left blank]

3.6 CONTAINMENT SYSTEMS

3.6.4.3 Standby Gas Treatment (SGT) System

The information in this section of the reference ABWR DCD, including all subsections, is incorporated by reference with no departures or supplements.

[This page intentionally left blank]

3.7 PLANT SYSTEMS

3.7.1 Reactor Building Cooling Water (RCW) System, Reactor Service Water (RSW) System and Ultimate Heat Sink (UHS) – Operating

The information in this section of the reference ABWR DCD, including all subsections, is incorporated by reference with the following departure and site-specific supplements. The site-specific supplements partially address COL License Information Item 16.1.

STD DEP 16.3-16

ACTIONS

CONDITION	*REQUIRED ACTION*		*COMPLETION TIME*
A. One RCW pump and/or one RSW pump and/or one RCW/RSW heat exchanger and/or one ~~[spray network]~~ cooling tower cell in the UHS inoperable in a single division.	*A.1*	*Restore pump(s) and/or heat exchanger and/or UHS ~~[spray network]~~ cooling tower cell to OPERABLE status.*	*14 days*
B. One RCW/RSW division inoperable for reasons other than Condition A. *OR* *Both ~~[spray networks]~~ cooling tower cells in one UHS division inoperable.*	*B.1*	*Declare associated supported required feature(s) inoperable and enter applicable Conditions and Required Actions of the LCOs for the inoperable required feature(s).*	*Immediately*
	AND		
	B.2	*Initiate action to restore RCW/RSW division or both UHS ~~[spray networks]~~ cooling tower cells to OPERABLE status.*	*Immediately*

ACTIONS (continued)

CONDITION	*REQUIRED ACTION*	*COMPLETION TIME*
C. Condition A exists in two or more RCW/RSW or UHS ~~spray networks~~ cooling tower divisions.	*C.1 Restore one inoperable RCW/RSW or UHS ~~spray networks~~ cooling tower division to OPERABLE status.* STD DEP 16.3-16 ~~*AND*~~ ~~*C.2 Restore two inoperable RCW/RSW or UHS [spray network] divisions to OPERABLE status.*~~	*7 days* ~~*14 days*~~
D. Required Action and associated Completion Time of Condition A, B or C not met. *OR* *Two or more RCW/RSW divisions inoperable for reasons other than Condition C.* *OR* *UHS inoperable.* *OR* *Two or more UHS ~~[spray network]~~ cooling tower divisions inoperable for reasons other than Condition C.*	*D.1 Be in MODE 3.* *AND* *D.2 Be in MODE 4.*	*12 hours* *36 hours*

SURVEILLANCE REQUIREMENTS

SURVEILLANCE		*FREQUENCY*
SR 3.7.1.1	*Verify the water level ~~of~~* in *~~each~~* the *UHS ~~[spray pond]~~* basin *is ≥~~[~~* 19.28 *~~]13.56~~* m *~~(MSL)~~.*	*24 hours*
SR 3.7.1.2	*Verify the water level in ~~each RSW pump well of~~ the ~~intake structure~~* UHS basin *is ≥~~[~~* 0.91 *~~]~~ m.*	*24 hours*
SR 3.7.1.3	*Verify the RSW water temperature at the inlet to the RCW/RSW heat exchangers is ≤~~[33.3~~* 32.2*~~]~~ °C.*	*24 hours*
SR 3.7.1.4	Operate each cooling tower cell fan for ≥ 15 minutes.	31 days
SR 3.7.1.~~4~~5	----------NOTE---------- *Isolation of flow to individual components does not render RCW/RSW System inoperable.* ---------- *Verify each RCW/RSW division and associated UHS ~~[spray network]~~* cooling tower *division manual, power operated, and automatic valve in the flow path servicing safety related systems or components, that is not locked, sealed, or otherwise secured in position, is in the correct position.*	*31 days*
SR 3.7.1.~~5~~6	*Verify each RCW/RSW division and associated UHS ~~[spray network]~~* cooling tower *division actuate on an actual or simulated initiation signal.*	*18 months*

[This page intentionally left blank]

3.7 PLANT SYSTEMS

3.7.2 Reactor Building Cooling Water (RCW) System, Reactor Service Water (RSW) System and Ultimate Heat Sink (UHS) - Shutdown

The information in this section of the reference ABWR DCD, including all subsections, is incorporated by reference with the following departures and site-specific supplements. The site-specific supplements partially address COL License Information Item 16.1.

STD DEP 16.3-16
STD DEP 16.3-46

LCO 3.7.2 *Three RCW/RSW divisions and UHS shall be OPERABLE.*

----------NOTE----------
One RCW/RSW division may be inoperable in MODE 5, and after 30 hours from initial entry into MODE 4 from MODE 3.

STD DEP 16.3-46

APPLICABILITY: *MODE 4,*
MODE 5 ~~except~~ with irradiated fuel in the reactor pressure vessel (RPV) *~~the reactor cavity to dryer/separator storage pool gate removed~~ and water level ≥< 7.0 m over the top of the reactor pressure vessel flange.*

ACTIONS

CONDITION	*REQUIRED ACTION*	*COMPLETION TIME*
A. One RCW pump and/or one RSW pump and/or one RCW/RSW heat exchanger and/or one ~~[spray network]~~ cooling tower cell in the UHS in one required division inoperable.	*A.1 Restore pump(s) and/or heat exchanger and/or UHS ~~[spray network]~~ cooling tower cell to OPERABLE status.*	*14 days*
B. Condition A exists in two or more required RCW/RSW or UHS ~~[spray network]~~ cooling tower divisions.	*B.1 Restore one inoperable RCW/RSW or UHS ~~[spray network]~~ cooling tower division to OPERABLE status.* STD DEP 16.3-16 ~~*AND*~~ ~~*B.2 Restore two inoperable RCW/RSW or UHS [spray network] divisions to OPERABLE status.*~~	*7 days* ~~*14 days*~~

ACTIONS (continued)

CONDITION	REQUIRED ACTION	COMPLETION TIME
C. One or more required RCW/RSW ~~division~~ or UHS ~~[spray network]~~ cooling tower divisions inoperable for reasons other then Condition A or B. OR UHS inoperable. OR Required Action and associated Completion Time of Condition A or B not met.	C.1 Enter applicable Conditions and Required Actions of LCO 3.8.11, “AC Sources – Shutdown (Low Water Level)” for diesel generator(s) made inoperable by RCW/RSW. AND C.2 Enter applicable Conditions and Required Actions of LCO 3.4.8, “Residual Heat Removal (RHR) – MODE 4,” or LCO 3.9.8, “RHR – Low Water Level”, for RHR shutdown cooling made inoperable by RCW/RSW.	Immediately Immediately

SURVEILLANCE REQUIREMENTS

SURVEILLANCE		FREQUENCY
SR 3.7.2.1	*Verify the water level* in ~~*of each*~~ the *UHS* ~~*[spray pond]*~~ basin *is ≥* ~~*[*~~ 19.28 ~~*]13.56*~~ m~~*(MSL)*~~*.*	*24 hours*
SR 3.7.2.2	*Verify the water level in* ~~*each RSW pump well of*~~ *the* ~~*intake structure*~~ UHS basin *is ≥* ~~*[*~~ 0.91 ~~*]*~~ *m.*	*24 hours*
SR 3.7.2.3	*Verify the RSW water temperature at the inlet to the RCW/RSW heat exchangers is ≤* ~~*[33.3*~~ 32.2~~*]*~~ *°C.*	*24 hours*
SR 3.7.2.4	Operate each cooling tower cell fan for ≥ 15 minutes.	31 days
SR 3.7.2.~~*4*~~5	*----------NOTE----------* *Isolation of flow to individual components does not render RCW/RSW System inoperable.* *----------* *Verify each RCW/RSW division and associated UHS* ~~*[spray network]*~~ cooling tower *division manual, power operated, and automatic valve in the flow path servicing safety related systems or components, that is not locked, sealed, or otherwise secured in position, is in the correct position.*	 *31 days*
SR 3.7.2.~~*5*~~6	*Verify each RCW/RSW division and associated UHS* ~~*[spray network*~~ cooling tower~~*]*~~ *division actuates on an actual or simulated initiation signal.*	*18 months*

3.7 PLANT SYSTEMS

3.7.3 Reactor Building Cooling Water (RCW) System and Reactor Service Water (RSW) System and Ultimate Heat Sink (UHS) – Refueling

The information in this section of the reference ABWR DCD, including all subsections, is incorporated by reference with the following departures and site-specific supplements. The site-specific supplements partially address COL License Information Item 16.1.

STD DEP 16.3-16
STD DEP 16.3-46

LCO 3.7.3 *One RCW/RSW division and UHS shall be OPERABLE.*

APPLICABILITY: *MODE 5 with ~~the reactor cavity to dryer/separator storage pool gate removed~~* irradiated fuel in the reactor pressure vessel *and water level ≥ 7.0 m over the top of the reactor pressure vessel flange.*

ACTIONS

CONDITION	*REQUIRED ACTION*	*COMPLETION TIME*
A. No RCW/RSW division OPERABLE. *OR* *UHS inoperable.* *OR* *Associated divisional UHS ~~[spray networks]~~* cooling towers *inoperable.*	*A.1 Enter applicable Conditions and Required Actions of LCO 3.8.2, "AC Sources-Refueling" for the diesel generator made inoperable by RCW/RSW.* *AND* *A.2 Enter applicable Conditions and Required Actions of LCO 3.9.7, "RHR-High Water Level", for RHR-Shutdown Cooling made inoperable by RCW/RSW.*	*Immediately* *Immediately*

SURVEILLANCE REQUIREMENTS

SURVEILLANCE		FREQUENCY
SR 3.7.3.1	*Verify the water level* in ~~*of each*~~ the *UHS* ~~*[spray pond]*~~ basin *is ≥* ~~*[*~~ 19.28 ~~*]13.56*~~ *m*~~*(MSL)*~~*.*	*24 hours*
SR 3.7.3.2	*Verify the water level in* ~~*each RSW pump well of*~~ *the* ~~*intake structure*~~ UHS basin *is ≥* ~~*[*~~ 0.91 ~~*]*~~ *m.*	*24 hours*
SR 3.7.3.3	*Verify the RSW water temperature at the inlet to the RCW/RSW heat exchangers is ≤* ~~*[33.3*~~ 32.2~~*]*~~ *°C.*	*24 hours*
SR 3.7.3.4	Operate each cooling tower cell fan for ≥ 15 minutes.	31 days
SR 3.7.3.~~*4*~~5	*----------NOTE----------* *Isolation of flow to individual components does not render RCW/RSW System inoperable.* *----------* *Verify each RCW/RSW division and associated UHS* ~~*[spray network*~~ cooling tower~~*]*~~ *division manual, power operated, and automatic valve in the flow path servicing safety related systems or components, that is not locked, sealed, or otherwise secured in position, is in the correct position.*	 *31 days*
SR 3.7.3.~~*5*~~6	*Verify each RCW/RSW division and associated UHS* ~~*[spray network*~~ cooling tower~~*]*~~ *division actuates on an actual or simulated initiation signal.*	*18 months*

3.7 PLANT SYSTEMS

3.7.4 Control Room Habitability Area (CRHA) – Emergency Filtration (EF) System

The information in this section of the reference ABWR DCD, including all subsections, is incorporated by reference with the following departure.

STD DEP 16.3-47

SURVEILLANCE REQUIREMENTS (continued)

SURVEILLANCE		*FREQUENCY*
SR 3.7.4.4	*Verify each EF division can maintain a positive pressure of ≥ 3.2 mm water gauge relative to the atmosphere during the isolation mode of operation at a flow rate of ≤ ~~360~~ 3400 m^3/h.*	*18 months on a STAGGERED TEST BASIS*

[This page intentionally left blank]

3.7 PLANT SYSTEM

3.7.5 Control Room Habitability Area (CRHA) – Air Conditioning (AC) System

The information in this section of the reference ABWR DCD, including all subsections, is incorporated by reference with no departures or supplements.

[This page intentionally left blank]

3.7 PLANT SYSTEMS

3.7.6 Main Condenser Offgas

The information in this section of the reference ABWR DCD, including all subsections, is incorporated by reference with no departures or supplements.

[This page intentionally left blank]

3.7 PLANT SYSTEMS

3.7.7 Main Turbine Bypass System

The information in this section of the reference ABWR DCD, including all subsections, is incorporated by reference with no departures or supplements.

[This page intentionally left blank]

3.7 PLANT SYSTEMS

3.7.8 Fuel Pool Water Level

The information in this section of the reference ABWR DCD, including all subsections, is incorporated by reference with no departures or supplements.

[This page intentionally left blank]

3.8 ELECTRICAL POWER SYSTEMS

3.8.1 AC Sources – Operating

The information in this section of the reference ABWR DCD, including all subsections, is incorporated by reference with the following departures and site specific supplements. The site specific supplements partially address COL License Information Item 16.1.

STD DEP 8.3-1
STD DEP 16.3-49
STD DEP 16.3-103

STD DEP 8.3-1
ACTIONS

CONDITION	*REQUIRED ACTION*		*COMPLETION TIME*
A. One of two offsite AC power sources to one ESF bus inoperable.	*A.1*	*Verify affected ESF bus is powered from the other operable offsite AC circuit.*	*72 hours* *AND* *Once per 8 hours thereafter*
	AND		
	A.2	*Verify the CTG is functional by verifying the CTG starts and achieves steady state voltage and frequency ~~within 2~~ in less than 10 minutes.*	*72 hours* *AND* *Once per 7 days thereafter*
	AND		
	A.3	*Verify the CTG circuit breakers are aligned to the affected ESF bus.*	*72 hours* *AND* *Once per 8 hours thereafter*
	AND		
	A.4	*Restore inoperable offsite AC power to affected ESF bus.*	*30 days*

ACTIONS (continued)

CONDITION	*REQUIRED ACTION*		*COMPLETION TIME*
B. One required offsite circuit inoperable.	*B.1*	*Perform SR 3.8.1.1 for OPERABLE required offsite circuit.*	*1 hour* *AND* *Once per 8 hours thereafter*
	AND		
	B.2	*Declare required feature(s) with no power available from an OPERABLE offsite circuit inoperable when the redundant required feature(s) are inoperable.*	*24 hours from discovery of no power available from an OPERABLE offsite circuit to one division concurrent with inoperability of redundant required feature(s)*
	AND		
	B.3	*Verify the combustion turbine generator (CTG) is functional by verifying the CTG starts and achieves steady state voltage and frequency ~~within 2~~ in less than 10 minutes.*	*72 hours*
	AND		
	B.4	*Verify the CTG circuit breakers are capable of being aligned to each of ESF buses.*	*72 hours* *AND* *Once per 8 hours thereafter*
	AND		

ACTIONS (continued)

CONDITION	*REQUIRED ACTION*		*COMPLETION TIME*
B. (continued)	*B.5*	*Restore required offsite circuit to OPERABLE status.*	*14 days* *AND* *1 day from discovery of two divisions with no power available from an OPERABLE offsite circuit* *AND* *15 days from discovery of failure to meet the LCO*
C. ----------NOTE---------- Required Action C.3.1 or C.3.2 shall be completed if this Condition is entered. ---------- *One required DG inoperable.*	*C.1*	*Perform SR 3.8.1.1 for OPERABLE required offsite circuit(s).*	*1 hour* *AND* *Once per 8 hours thereafter*
	AND		
	C.2	*Declare required feature(s), supported by the inoperable DG, inoperable when the redundant required features(s) are inoperable.*	*4 hours from discovery of Condition C concurrent with inoperability of redundant required feature(s)*
	AND		
	C.3.1	*Determine OPERABLE DG(s) are not inoperable due to common cause failure.*	*24 hours*
	OR		

ACTIONS (continued)

CONDITION	*REQUIRED ACTION*		*COMPLETION TIME*
C . (continued)	*C.3.2*	*Perform SR 3.8.1.2 for OPERABLE DG(s).*	*24 hours*
	AND		
	C.4	*Verify the combustion turbine generator (CTG) is functional by verifying the CTG starts and achieves steady state voltage and frequency ~~within 2~~ in less than 10 minutes.*	*72 hours*
	AND		
	C.5	*Verify the CTG circuit breakers are aligned to the ESF bus associated with the inoperable DG.*	*72 hours* *AND* *Once per 8 hours thereafter*
	AND		
	C.6	*Restore required DG to OPERABLE status.*	*14 days* *AND* *15 days from discovery of failure to meet the LCO*
D. Two required offsite circuits inoperable.	*D.1*	*Declare required feature(s) inoperable when the redundant required feature(s) are inoperable.*	*12 hours from discovery of Condition D concurrent with inoperability of redundant required feature(s)*
	AND		

ACTIONS (continued)

CONDITION	*REQUIRED ACTION*	*COMPLETION TIME*
	D.2 *Restore one required offsite circuit to OPERABLE status.*	*24 hours*
E. One required offsite circuit inoperable. *AND* *One required DG inoperable.*	----------NOTE---------- *Enter applicable Conditions and Required Actions of LCO 3.8.9, "Distribution Systems - Operating," when Condition D is entered with no required AC power source to one division.* ---------- *E.1* *Verify the combustion turbine generator (CTG) is functional by verifying the CTG starts and achieves steady state voltage and frequency ~~within 2~~ in less than 10 minutes.* *AND* *E.2* *Verify the CTG circuit breakers are aligned to the ESF bus associated with the inoperable DG.* *AND* *E.3.1* *Restore required offsite circuit to OPERABLE status.* *OR* *E.3.2* *Restore required DG to OPERABLE status.*	 *12 hours* *12 hours* *AND* *Once per 8 hours thereafter* *72 hours* *72 hours*

ACTIONS (continued)

CONDITION	*REQUIRED ACTION*		*COMPLETION TIME*
F. Two required DGs inoperable.	*F.1*	*Verify the combustion turbine generator (CTG) is functional by verifying the CTG starts and achieves steady state voltage and frequency ~~within 2~~ in less than 10 minutes.*	*2 hours*
	AND		
	F.2	*Verify the CTG circuit breakers are aligned to one ESF bus associated with an inoperable DG and capable of being aligned to the other ESF bus associated with an inoperable DG.*	*2 hours* *AND* *Once per 8 hours thereafter*
	AND		
	F.3	*Restore one required DG to OPERABLE status.*	*72 hours*

STD DEP 8.3-1

SURVEILLANCE REQUIREMENTS

SURVEILLANCE		*FREQUENCY*
SR 3.8.1.2	*----------NOTES----------* *1. Performance of SR 3.8.1.7 satisfies this SR.* *2. All DG starts may be preceded by an engine prelube period and followed by a warmup period prior to loading.* *3. A modified DG start involving idling and gradual acceleration to synchronous speed may be used for this SR as recommended by the manufacturer. When modified start procedures are not used, the time, voltage, and frequency tolerances of SR 3.8.1.7 must be met.* *----------* *Verify each DG starts from standby conditions and achieves steady state voltage ≥ [3744] V and ≤ [4576] V and frequency ≥ [58.8] Hz and ≤ [61.2] Hz.*	*As specified in Table 3.8.1-1*
SR 3.8.1.3	*----------NOTES----------* *1. DG loadings may include gradual loading as recommended by the manufacturer.* *2. Momentary transients outside the load range do not invalidate this test.* *3. This Surveillance shall be conducted on only one DG at a time.* *4. This SR shall be preceded by, and immediately follow, without shutdown, a successful performance of SR 3.8.1.2 or SR 3.8.1.7.* *----------* *Verify each DG is synchronized and loaded and operates for ≥ 60 minutes at a load ≥ [6480] kW and ≤ [7200] kW.*	*As specified in Table 3.8.1-1*
SR 3.8.1.4	*Verify each day tank contains ≥ [16,900] liters of fuel oil.*	*31 days*

SURVEILLANCE REQUIREMENTS (continued)

SURVEILLANCE		*FREQUENCY*
SR 3.8.1.7	----------NOTE---------- All DG starts may be preceded by an engine prelube period. ---------- *Verify each DG starts from standby condition and achieves, in ≤ 20 seconds, voltage ≥ [3744] V and ≤ [4576] V and frequency ≥ [58.8] Hz and ≤ [61.2] Hz.*	*184 days*
SR 3.8.1.8	*----------NOTES----------* *1. This Surveillance shall not be performed in MODE 1 or 2.* *2. Credit may be taken for unplanned events that satisfy this SR.* *----------* *Verify manual transfer of the [unit power supply] from the normal offsite circuit to each required alternate offsite circuit.*	*18 months*

SURVEILLANCE REQUIREMENTS (continued)

SURVEILLANCE		*FREQUENCY*
SR 3.8.1.9	*----------NOTES----------* *1. This Surveillance shall not be performed in MODE 1 or 2.* *2. Credit may be taken for unplanned events that satisfy this SR.* *----------* *Verify each DG operating at a power factor ≤ 0.9 rejects a load ≥ 589 kW for Division 1 and ≥ 1689 kW for Divisions 2 and 3, and:* a. *Following load rejection, the frequency is ≤ [66.7] Hz;* b. *Within 3 seconds following load rejection, the voltage is ≥ [3744] V and ≤ [4576] V; and* c. *Within 3 seconds following load rejection, the frequency is ≥ 58.8 Hz and ≤ 61.2 Hz.*	*18 months*
SR 3.8.1.10	*----------NOTES----------* *1. This Surveillance shall not be performed in MODE 1 or 2.* *2. Credit may be taken for unplanned events that satisfy this SR.* *----------* *Verify each DG operating at a power factor ≤ 0.9 does not trip and voltage is maintained ≤ [4784] V during and following a load rejection of a load ≥ [6480] kW and ≤ [7200] kW.*	*18 months*

SURVEILLANCE REQUIREMENTS (continued)

SURVEILLANCE		*FREQUENCY*
SR 3.8.1.11	*----------NOTES----------* *1. All DG starts may be preceded by an engine prelube period.* *2. This Surveillance shall not be performed in MODE 1, 2, or 3.* *3. Credit may be taken for unplanned events that satisfy this SR.* *----------* *Verify on an actual or simulated loss of offsite power signal:* *a. De-energization of emergency buses;* *b. Load shedding from emergency buses; and* *c. DG auto-starts from standby condition and:* *1. energizes permanently connected loads in ≤ 20 seconds,* *2. sequentially energizes auto-connected shutdown loads,* *3. maintains steady state voltage ≥ [3744] V and ≤ [4576] V,* *4. maintains steady state frequency ≥ [58.8] Hz and ≤ [61.2] Hz, and* *5. supplies permanently connected and auto-connected shutdown loads for ≥ 5 minutes.*	 *18 months*

SURVEILLANCE REQUIREMENTS (continued)

SURVEILLANCE		*FREQUENCY*
SR 3.8.1.12	*----------NOTES----------* *1. All DG starts may be preceded by an engine prelube period.* *2. This Surveillance shall not be performed in MODE 1 or 2.* *3. Credit may be taken for unplanned events that satisfy this SR.* *----------* *Verify on an actual or simulated Emergency Core Cooling System (ECCS) initiation signal each DG auto-starts from standby condition and:* a. *In ≤ 20 seconds after auto-start and during tests, achieves voltage ≥ [3744] V and ≤ [4576] V;* b. *In ≤ 20 seconds after auto-start and during tests, achieves frequency ≥ [58.8] Hz and ≤ [61.2] Hz;* c. *Operates for ≥ 5 minutes;* *d. Permanently connected loads remain energized from the offsite power system; and* *e. Emergency loads are sequentially energized from the offsite power system.*	*18 months*

SURVEILLANCE REQUIREMENTS (continued)

SURVEILLANCE		*FREQUENCY*
SR 3.8.1.14	*----------NOTES----------* *1. Momentary transients outside the load and power factor ranges do not invalidate this test.* *2. This Surveillance shall not be performed in MODE 1 or 2.* *3. Credit may be taken for unplanned events that satisfy this SR.* *----------* *Verify each DG operating at a power factor ≤ 0.9, operates for ≥ 24 hours:* a. *For ≥ 2 hours loaded, ≥ 7560 kW and ≤ 7920 kW; and* b. *For the remaining hours of the test loaded ≥ 6480 kW and ≤ [7200 kW].*	*18 months*
STD DEP 16.3-103 *SR 3.8.1.15*	*----------NOTES----------* *1. This Surveillance shall be performed within 5 minutes of shutting down the DG after the DG has operated ≥ 2 hours loaded ≥ 6480 kW and ≤ 7200 kW.* *Momentary transients outside of load range do not invalidate this test.* *2. All DG starts may be preceded by an engine prelube period.* *----------* *Verify each DG starts and achieves, in ≤ 20 seconds, voltage ≥ [3744] V and ≤ [4576] V and frequency ≥ [58.8] Hz and ≤ [61.2] Hz.*	*18 months*

SURVEILLANCE REQUIREMENTS (continued)

SURVEILLANCE		*FREQUENCY*
SR 3.8.1.19	*----------NOTES----------* *1. All DG starts may be preceded by an engine prelube period.* *2. This Surveillance shall not be performed in MODE 1, 2, or 3.* *3. Credit may be taken for unplanned events that satisfy this SR.* *----------* *Verify, on an actual or simulated loss of offsite power signal in conjunction with an actual or simulated ECCS initiation signal:* *a. De-energization of emergency buses;* *b. Load shedding from emergency buses; and* *c. DG auto-starts from standby condition and:* 1. *energizes permanently connected loads in ≤ 20 seconds,* 2. *sequentially energizes auto-connected emergency loads,* 3. *achieves steady state voltage ≥ [3744] V and ≤ [4576] V,* 4. *achieves steady state frequency ≥ [58.8] Hz and ≤ [61.2] Hz, and* 5. *supplies permanently connected and auto-connected emergency loads for ≥ 5 minutes.*	*18 months*

SURVEILLANCE REQUIREMENTS (continued)

SURVEILLANCE		*FREQUENCY*
SR 3.8.1.20	----------NOTE---------- *All DG starts may be preceded by an engine prelube period.* ---------- *Verify, when started simultaneously from standby condition, each Division 1, 2, and 3 DG achieves, in ≤ 20 seconds, voltage ≥ ~~[~~ 3744 ~~]~~ V and ≤ ~~[~~ 4576 ~~]~~ V and frequency ≥ ~~[~~58.8~~]~~ Hz and ≤ ~~[~~61.2~~]~~ Hz.*	*10 years during shutdown*

STD DEP 16.3-49

Table 3.8.1-1 (page 1 of 1)
Diesel Generator Test Schedule

(b) This test frequency shall be maintained until seven consecutive failure free starts from standby conditions and load and run tests have been performed. ~~This is consistent with Regulatory Position [ ], of Regulatory Guide 1.9, Revision 3.~~ If, subsequent to the 7 failure free tests, 1 or more additional failures occur such that there are again 4 or more failures in the last 25 tests, the testing interval shall again be reduced as noted above and maintained until 7 consecutive failure free tests have been performed.

3.8 ELECTRICAL POWER SYSTEMS

3.8.2 AC Sources – Refueling

The information in this section of the reference ABWR DCD, including all subsections, is incorporated by reference with the following departure.

STD DEP 16.3-41

ACTIONS

CONDITION	*REQUIRED ACTION*	*COMPLETION TIME*
A. Required offsite circuit inoperable.	----------NOTE---------- *Enter applicable Condition and Required Actions of LCO 3.8.10, with one required division de-energized as a result of Condition ~~B~~A.* ----------	

[This page intentionally left blank]

3.8 ELECTRICAL POWER SYSTEMS

3.8.3 Diesel Fuel Oil, Lube Oil, and Starting Air

The information in this section of the reference ABWR DCD, including all subsections, is incorporated by reference with the following departure and site-specific supplements. The site specific supplements partially address COL License Information Item 16.1.

STD DEP 16.3-51

ACTIONS

CONDITION	*REQUIRED ACTION*	*COMPLETION TIME*
A. One or more DGs with fuel oil level < [380,000] liters and ≥ [350,000] liters in storage tank.	*A.1 Restore fuel oil level to within limits.*	*48 hours*
B. One or more DGs with lube oil inventory < [7,300] liters and ≥ [6,700] liters.	*B.1 Restore lube oil inventory to within limits.*	*48 hours*
E. One or more DGs with pressure in at least one *starting air receiver ~~pressure~~ < [3,000] kPaG and ≥ [2,700] kPaG.*	E.1 *Restore starting air receiver pressure to ≥ [3,000] kPaG.*	*48 hours*

SURVEILLANCE REQUIREMENTS

SURVEILLANCE		*FREQUENCY*
SR 3.8.3.1	*Verify each fuel oil storage tank contains ≥[380,000] liters.*	*31 days*
SR 3.8.3.2	*Verify lube oil inventory for each DG is ≥[7,300] liters.*	*31 days*
SR 3.8.3.4	*Verify each required DG air start receiver pressure is ≥[3,000] kPaG.*	*31 days*

3.8 ELECTRICAL POWER SYSTEMS

3.8.4 DC Sources – Operating

The information in this section of the reference ABWR DCD, including all subsections, is incorporated by reference with the following departure and site-specific supplements. The site specific supplements partially address COL License Information Item 16.1.

STD DEP 8.3-1

ACTIONS

CONDITION	*REQUIRED ACTION*		*COMPLETION TIME*
A. One DC electrical power subsystem (either Division I, II, or III) inoperable.	*A.1*	*Determine OPERABLE DC electrical subsystems are not inoperable due to common cause failure.*	*2 hours*
	AND		
	A.2	*Declare affected required features inoperable.*	*2 hours*
	AND		
	A.3	*Verify the combustion turbine generator (CTG) is functional by verifying the CTG starts and achieves steady state voltage and frequency ~~within 2~~in less than 10 minutes.*	*12 hours*
	AND		
	A.4	*Verify the CTG circuit breakers are capable of being aligned to the two unaffected ESF buses.*	*12 hours* *AND* *Once per 8 hours thereafter*
	AND		

ACTIONS (continued)

CONDITION	*REQUIRED ACTION*	*COMPLETION TIME*
A. (continued)	*A.5 Restore inoperable DC electrical power subsystem to OPERABLE status.*	*72 hours*

SURVEILLANCE REQUIREMENTS

SURVEILLANCE		*FREQUENCY*
SR 3.8.4.1	*Verify battery terminal voltage is ≥[130] V on float charge.*	*7 days*
SR 3.8.4.2	*Verify no visible corrosion at terminals and connectors.* *OR* *Verify connection resistance is* *≤[20% above the resistance as measured during installation of the battery] ohms for inter-cell connections,* *≤[20% above the resistance as measured during installation of the battery] ohms for inter-rack connections,* *≤[20% above the resistance as measured during installation of the battery] ohms for inter-tier connections, and* *≤[20% above the resistance as measured during installation of the battery] ohms for terminal connections.*	*92 days*

SURVEILLANCE REQUIREMENTS

SURVEILLANCE		*FREQUENCY*
SR 3.8.4.5	*Verify connection resistance is* *≤[* 20% above the resistance as measured during installation of the battery *] ohms for inter-cell connections,* *≤[* 20% above the resistance as measured during installation of the battery *] ohms for inter-rack connections,* *≤[* 20% above the resistance as measured during installation of the battery *] ohms for inter-tier connections, and* *≤[* 20% above the resistance as measured during installation of the battery *] ohms for terminal connections.*	*12 months*
SR 3.8.4.6	*----------NOTES----------* *1. This Surveillance shall not be performed in MODE 1, 2, or 3.* *2. Credit may be taken for unplanned events that satisfy this SR.* *----------* *Verify each required battery charger supplies ≥ [* 600 *] amps at ≥ 125 V for ≥ 12 hours.*	 *18 months*

[This page intentionally left blank]

3.8 ELECTRICAL POWER SYSTEMS

3.8.5 DC Sources – Shutdown

The information in this section of the reference ABWR DCD, including all subsections, is incorporated by reference with no departures or supplements.

[This page intentionally left blank]

3.8 ELECTRICAL POWER SYSTEMS

3.8.6 Battery Cell Parameters

The information in this section of the reference ABWR DCD, including all subsections, is incorporated by reference with the following departure and site-specific supplements. The site specific supplements partially address COL License Information Item 16.1.

STD DEP 16.3-58

ACTIONS

CONDITION	*REQUIRED ACTION*	*COMPLETION TIME*
A. One or more batteries with one or more battery cell parameters not within Table 3.8.6-1 Category A or B *limits.*	*A.1 Verify pilot cells electrolyte level and float voltage meet Table 3.8.6-1 Category C limits.*	*1 hour*

SURVEILLANCE REQUIREMENTS

SURVEILLANCE		*FREQUENCY*
SR 3.8.6.2	*Verify battery cell parameters meet Table 3.8.6-1 Category B limits.*	*92 days* *AND* *Once within 24 hours after battery discharge < [110] V* *AND* *Once within 24 hours after battery overcharge > [140] V*

Table 3.8.6-1 (page 1 of 1)
Battery Cell Parameter Requirements

PARAMETER	CATEGORY A: LIMITS FOR EACH DESIGNATED PILOT CELL	CATEGORY B: LIMITS FOR EACH CONNECTED CELL	CATEGORY C: LIMITS FOR EACH CONNECTED CELL
Electrolyte Level	> Minimum level indication mark, and ≤ 6 mm above maximum level indication mark[a]	> Minimum level indication mark, and ≤ 6 mm above maximum level indication mark[a]	Above top of plates, and not overflowing
Float Voltage	≥ 2.13 V	≥ 2.13 V	> 2.07 V
Specific Gravity [b][c]	≥ [1.195]	≥ [1.190] AND Average of all connected cells > [1.200]	Not more than 0.020 below average of all connected cells AND Average of all connected cells ≥ [1.190]

a It is acceptable for the electrolyte level to temporarily increase above the specified maximum level during equalizing charges provided it is not overflowing.

b Corrected for electrolyte temperature and level.

c Or battery charging current is < [2] amps when on float charge. This is acceptable only during a maximum of [7] days following a battery recharge.

3.8 ELECTRICAL POWER SYSTEMS

3.8.7 Inverters – Operating

The information in this section of the reference ABWR DCD, including all subsections, is incorporated by reference with no departures or supplements.

[This page intentionally left blank]

3.8 ELECTRICAL POWER SYSTEMS

3.8.8 Inverters – Shutdown

The information in this section of the reference ABWR DCD, including all subsections, is incorporated by reference with no departures or supplements.

[This page intentionally left blank]

3.8 ELECTRICAL POWER SYSTEMS

3.8.9 Distribution Systems – Operating

The information in this section of the reference ABWR DCD, including all subsections, is incorporated by reference with the following departure.

STD DEP 8.3-1

ACTIONS

CONDITION	*REQUIRED ACTION*		*COMPLETION TIME*
A. One AC electrical power distribution subsystem inoperable.	*A.1*	*Declare affected required features inoperable.*	*2 hours*
	AND		
	A.2	*Verify the combustion turbine generator (CTG) is functional by verifying the CTG starts and achieves steady state voltage and frequency ~~within 2~~*in less than 10 *minutes.*	*12 hours*
	AND		
	A.3	*Verify the CTG circuit breakers are capable of being aligned to the OPERABLE* ESF *buses.*	*12 hours* *AND* *Once per 8 hours thereafter*
	AND		
	A.4	*Restore AC electrical power distribution subsystem to OPERABLE status*	*72 hours* *AND* *7 days from discovery of failure to meet LCO*

ACTIONS (continued)

CONDITION	*REQUIRED ACTION*		*COMPLETION TIME*
D. One DC electrical power distribution subsystem (either Division I, II, or III) inoperable.	*D.1*	*Declare affected required features inoperable.*	*2 hours*
	AND		
	D.2	*Verify the combustion turbine generator (CTG) is functional by verifying the CTG starts and achieves steady state voltage and frequency ~~within 2~~* in less than 10 *minutes.*	*12 hours*
	AND		
	D.3	*Verify the CTG circuit breakers are capable of being aligned to the two unaffected* ESF buses*.*	*12 hours* *AND* *Once per 8 hours thereafter*
	AND		
	D.4	*Restore DC electrical power distribution subsystems to OPERABLE status.*	*72 hours* *AND* *7 days from discovery of failure to meet LCO*

3.8 ELECTRICAL POWER SYSTEMS

3.8.10 Distribution Systems – Shutdown

The information in this section of the reference ABWR DCD, including all subsections, is incorporated by reference with no departures or supplements.

[This page intentionally left blank]

3.8 ELECTRICAL POWER SYSTEMS

3.8.11 AC Sources – Shutdown (Low Water Level)

The information in this section of the reference ABWR DCD, including all subsections, is incorporated by reference with the following departure.

STD DEP 8.3-1

ACTIONS (continued)

CONDITION	*REQUIRED ACTION*		*COMPLETION TIME*
B. One required DG inoperable.	*B.1*	*Verify the combustion turbine generator (CTG) is functional by verifying the CTG starts and achieves steady state voltage and frequency ~~within 2~~ in less than 10 minutes.*	*1 hour*
	AND		
	B.2	*Verify the CTG circuit breakers are aligned to the* ESF *bus associated with the inoperable required DG.*	*1 hour* *AND* *Once per 8 hours thereafter*
	AND		
	B.3	*Restore required DG to OPERABLE status.*	*14 days*

ACTIONS (continued)

CONDITION	*REQUIRED ACTION*		*COMPLETION TIME*
C. Required Action and Completion Time of Condition B not met. *<u>OR</u>* *Two or more required DGs inoperable.*	*C.1*	*Suspend CORE ALTERATIONS.*	*Immediately*
	<u>AND</u>		
	C.2	*Suspend movement of irradiated fuel assemblies in secondary containment.*	*Immediately*
	<u>AND</u>		
	C.3	*Initiate action to suspend OPDRVs.*	*Immediately*
	<u>AND</u>		
	C.4	*Initiate action to restore required DG(s) to OPERABLE status.*	*Immediately*
	<u>AND</u>		
	C.5	*Declare affected required features supported by the inoperable DG(s) inoperable.*	*8 hours*

3.9 REFUELING OPERATIONS

3.9.1 Refueling Equipment Interlocks

The information in this section of the reference ABWR DCD, including all subsections, is incorporated by reference with the following departure.

STD DEP 16.3-25

LCO 3.9.1 *The refueling equipment interlocks* associated with the reactor mode switch in the refuel position *shall be OPERABLE.*

APPLICABILITY: *During in-vessel fuel movement with equipment associated with the interlocks* when the reactor mode switch is in the refuel position*.*

[This page intentionally left blank]

3.9

3.9 REFUELING OPERATIONS

3.9.2 Refuel Position Rod-Out Interlock

The information in this section of the reference ABWR DCD, including all subsections, is incorporated by reference with no departures or supplements.

[This page intentionally left blank]

3.9 REFUELING OPERATIONS

3.9.3 Control Rod Position

The information in this section of the reference ABWR DCD, including all subsections, is incorporated by reference with no departures or supplements.

[This page intentionally left blank]

3.9 REFUELING OPERATIONS

3.9.4 Control Rod Position Indication

The information in this section of the reference ABWR DCD, including all subsections, is incorporated by reference with no departures or supplements.

[This page intentionally left blank]

3.9 REFUELING OPERATIONS

3.9.5 Control Rod OPERABILITY - Refueling

The information in this section of the reference ABWR DCD, including all subsections, is incorporated by reference with the following departure.

STD DEP 16.3-15

SURVEILLANCE REQUIREMENTS

SURVEILLANCE		*FREQUENCY*
SR 3.9.5.1	*Insert each withdrawn control rod at least one step.*	*7 days*
SR 3.9.5.2	*Verify each withdrawn control rod scram accumulator pressure is ≥~~10.49~~ 12.75 MPaG.*	*7 days*

[This page intentionally left blank]

3.9 REFUELING OPERATIONS

3.9.6 Reactor Pressure Vessel (RPV) Water Level

The information in this section of the reference ABWR DCD, including all subsections, is incorporated by reference with no departures or supplements.

[This page intentionally left blank]

3.9 REFUELING OPERATIONS

3.9.7 Residual Heat Removal (RHR) – High Water Level

The information in this section of the reference ABWR DCD, including all subsections, is incorporated by reference with no departures or supplements.

[This page intentionally left blank]

3.9 REFUELING OPERATIONS

3.9.8 Residual Heat Removal (RHR) – Low Water Level

The information in this section of the reference ABWR DCD, including all subsections, is incorporated by reference with no departures or supplements.

[This page intentionally left blank]

3.10 SPECIAL OPERATIONS

3.10.1 Inservice Leak and Hydrostatic Testing Operation

The information in this section of the reference ABWR DCD, including all subsections, is incorporated by reference with no departures or supplements.

[This page intentionally left blank]

3.10 SPECIAL OPERATIONS

3.10.2 Reactor Mode Switch Interlock Testing

The information in this section of the reference ABWR DCD, including all subsections, is incorporated by reference with no departures or supplements.

[This page intentionally left blank]

3.10 SPECIAL OPERATIONS

3.10.3 Control Rod Withdrawal – Hot Shutdown

The information in this section of the reference ABWR DCD, including all subsections, is incorporated by reference with no departures or supplements.

[This page intentionally left blank]

3.10 SPECIAL OPERATIONS

3.10.4 Control Rod Withdrawal – Cold Shutdown

The information in this section of the reference ABWR DCD, including all subsections, is incorporated by reference with the following departure.

STD DEP 16.3-19

LCO 3.10.4 *The reactor mode switch position specified in Table 1.1-1 for MODE 4 may be changed to include the refuel position, and operation considered not to be in MODE 2, to allow withdrawal of a single control rod or control rod pair, and subsequent removal of the associated control rod drives (CRD) if desired, provided the following requirements are met:*

a. All other control rods are fully inserted;

b. 1. LCO 3.9.2, "Refuel Position Rod-Out Interlock," and

LCO 3.9.4, "Control Rod Position Indication,"

<u>OR</u>

2. A control rod withdrawal block is inserted; and

c. 1. LCO 3.3.1.1, "SSLC Sensor Instrumentation," MODE 5 requirements for Functions 1.a, 1.d, 2.a, and 2.d., of Table 3.3.1.1-1,

LCO 3.3.1.2, "RPS and MSIV Trip Actuation," Functions 1.a, 1.b, 3, and 4; and

LCO 3.9.5, "Control Rod OPERABILITY – Refueling,"

<u>OR</u>

2. All control rods<u>, other than the control rod or rod pair being withdrawn,</u> in a five by five array centered on <u>each</u> control rod being withdrawn<u>,</u> are disarmed, and

LCO 3.1.1, "SHUTDOWN MARGIN (SDM)," MODE 5 requirements, except the single control rod or control rod pair to be withdrawn may be assumed to be the highest worth control rod or control rod pair.

[This page intentionally left blank]

3.10 SPECIAL OPERATIONS

3.10.5 Control Rod Drive (CRD) Removal – Refueling

STD DEP 16.3-21

The information in this section of the reference ABWR DCD, including all subsections, is incorporated by reference with the following departure.

LCO 3.10.5 *The requirements of Functions 1.a, 1.b, 1.d, ~~2.a, 2.d~~ and 12 of LCO 3.3.1.1, "SSLC Sensor Instrumentation"; Functions 1.a, 1.b, 3, and 4 of LCO 3.3.1.2, "RPS and MSIV Actuation", LCO 3.3.8.1, "Electric Power Monitoring"; LCO 3.9.1, "Refueling Equipment Interlocks"; LCO 3.9.2, "Refueling Position Rod-Out Interlock"; LCO 3.9.4, "Control Rod Position Indication"; and LCO 3.9.5, "Control Rod OPERABILITY – Refueling," may be suspended in MODE 5 to allow the removal of a single CRD or CRD pair associated with control rod(s) withdrawn from core cell(s) containing one or more fuel assemblies, provided the following requirements are met:*

a. All other control rods are fully inserted;

b. All other control rods in a five by five array centered on the control rod being removed are disarmed;

c. A control rod withdrawal block is inserted;

d. LCO 3.1.1, "SHUTDOWN MARGIN (SDM)," MODE 5 requirements, except the single control rod (or pair) to be withdrawn may be assumed to be the highest worth control rod pair; and

e. No other CORE ALTERATIONS are in progress.

APPLICABILITY: *MODE 5 with LCO 3.9.5 not met.*

[This page intentionally left blank]

3.10 SPECIAL OPERATIONS

3.10.6 Multiple Control Rod Withdrawal – Refueling

The information in this section of the reference ABWR DCD, including all subsections, is incorporated by reference with no departures or supplements.

[This page intentionally left blank]

3.10 SPECIAL OPERATIONS

3.10.7 Control Rod Testing – Operating

The information in this section of the reference ABWR DCD, including all subsections, is incorporated by reference with the following departure.

STD DEP 16.3-4

LCO 3.10.7 *The requirements of LCO 3.1.6, "Rod Pattern Control," may be suspended ~~and control rods bypassed in the Rod Action and Position Information (RAPI) Subsystem as allowed by SR 3.3.5.1.7,~~ to allow performance of SDM demonstrations, control rod scram time testing, control rod friction testing, and the Startup Test Program, provided* LCO 3.3.5.1, "Control Rod Block Instrumentation" for Function 1.b of Table 3.3.5.1-1 is met with the approved control rod sequence or *conformance to the approved control rod sequence for the specified test is verified by a second licensed operator or other qualified member of the technical staff.*

APPLICABILITY: *MODES 1 and 2 with LCO 3.1.6 not met.*

SURVEILLANCE REQUIREMENTS

SURVEILLANCE		*FREQUENCY*
SR 3.10.7.1	----------NOTE---------- Not required to be met if SR 3.10.7.2 is satisfied. ---------- *Verify movement of control rods is in compliance with the approved control rod sequence for the specified test by a second licensed operator or other qualified member of the technical staff.*	*During control rod movement*
SR 3.10.7.2	----------NOTE---------- Not required to be met if SR 3.10.7.1 is satisfied. ---------- Perform the applicable SRs for LCO 3.3.5.1 Function 1.b.	According to the applicable SRs

[This page intentionally left blank]

3.10 SPECIAL OPERATIONS

3.10.8 SHUTDOWN MARGIN (SDM) Test – Refueling

The information in this section of the reference ABWR DCD, including all subsections, is incorporated by reference with the following departure.

STD DEP 16.3-18

ACTIONS

CONDITION	REQUIRED ACTION		COMPLETION TIME
A. One of more of the above requirements not met, for reasons other than Condition B	*A.1*	*Place the reactor mode switch in the shutdown or refuel position.*	*Immediately*
B. One control rod not coupled to its associated CRD.	*B.1*	*Declare the affected control rod inoperable.*	*Immediately*
	AND		
	B.2	Place the reactor mode switch in the shutdown or refuel position.	Immediately

[This page intentionally left blank]

3.10 SPECIAL OPERATIONS

3.10.9 Reactor Internal Pumps (RIPs) – Testing

The information in this section of the reference ABWR DCD, including all subsections, is incorporated by reference with no departures or supplements.

[This page intentionally left blank]

3.10 SPECIAL OPERATIONS

3.10.10 Training Startups

The information in this section of the reference ABWR DCD, including all subsections, is incorporated by reference with no departures or supplements.

[This page intentionally left blank]

3.10 SPECIAL OPERATIONS

3.10.11 Low Power PHYSICS TEST

The information in this section of the reference ABWR DCD, including all subsections, is incorporated by reference with no departures or supplements.

[This page intentionally left blank]

3.10 SPECIAL OPERATIONS

3.10.12 Multiple Control Rod Drive Subassembly Removal – Refueling

The information in this section of the reference ABWR DCD, including all subsections, is incorporated by reference with the following departure.

STD DEP 16.3-17

LCO 3.10.12 *The requirements of LCO 3.9.3, "Control Rod Position"; LCO 3.9.4, "Control Rod Position Indication"; and LCO 3.9.5, "Control Rod OPERABILITY – Refueling," may be suspended, and the "full in" position indicators may be bypassed for any number of control rods in MODE 5, to allow removal of control rod drive subassemblies with the control rods maintained fully inserted by their* applicable *anti-rotation devices, provided the following requirements are met:*

SURVEILLANCE REQUIREMENTS

SURVEILLANCE		*FREQUENCY*
SR 3.10.12.1	*Verify the* applicable *anti-rotation devices associated with each CRD subassembly* ~~*removed*~~ removal *are in the correct position to maintain the control rod fully inserted.*	*24 hours*

[This page intentionally left blank]

B 3.0 LIMITING CONDITION FOR OPERATION (LCOs) AND SURVEILLANCE REQUIREMENTS (SRs)

BASES

The information in this section of the reference ABWR DCD, including all subsections, is incorporated by reference with the following departures.

STD DEP 16.3-1
STD DEP 16.3-2

STD DEP 16.3-1 *LCO 3.0.6*

Specification ~~5.8~~5.6, "Safety Function Determination Program" (SFDP), ensures loss of safety function is detected and appropriate actions are taken. Upon failure to meet two or more LCOs concurrently, an evaluation shall be made to determine if loss of safety function exists. Additionally, other limitations, remedial actions, or compensatory actions may be identified as a result of the support system inoperability and corresponding exception to entering supported system Conditions and Required Actions. The SFDP implements the requirements of LCO 3.0.6.

STD DEP 16.3-2 *SR 3.0.1*

Upon completion of maintenance, appropriate post maintenance testing is required to declare equipment OPERABLE. This includes ensuring applicable Surveillances are not failed and their most recent performance is in accordance with SR 3.0.2. Post maintenance testing may not be possible in the current MODE or other specified conditions in the Applicability due to the necessary unit parameters not having been established. In these situations, the equipment may be considered OPERABLE provided testing has been satisfactorily completed to the extent possible and the equipment is not otherwise believed to be incapable of performing its function. This will allow operation to proceed to a MODE or other specified condition where other necessary post maintenance tests can be completed. Some examples of this process are:

a. Control rod drive maintenance during refueling that requires scram testing at > [~~5.51~~ 6.55 MPaG.] However, if other appropriate testing is satisfactorily completed and the scram time testing of SR 3.1.~~3.4~~ 4.3 is satisfied, the control rod can be considered OPERABLE. This allows startup to proceed to reach [~~551~~ 6.55 MPaG] to perform other necessary testing.

b. ~~High pressure core flooder (HPCF)~~ Reactor core isolation cooling (RCIC) maintenance during shutdown that requires system functional tests at a specified pressure. Provided other appropriate testing is satisfactorily completed, startup can proceed with ~~HPCF~~ RCIC considered OPERABLE. This allows operation to reach the specified pressure to complete the necessary post maintenance testing.

[This page intentionally left blank]

B 3.1 REACTIVITY CONTROL SYSTEMS

B 3.1.1 SHUTDOWN MARGIN (SDM)

BASES

The information in this section of the reference ABWR DCD, including all subsections, is incorporated by reference with the following departure.

STD DEP 16.3-4

SURVEILLANCE REQUIREMENTS

SR 3.1.1.1

The SDM may be demonstrated during an in sequence control rod pair withdrawal, in which the highest worth control rod pair is analytically determined, or during local criticals, where the highest worth control rod pair is determined by testing. Local critical tests require the withdrawal of out of sequence control rods. ~~This testing would therefore require bypassing of the Rod Worth Minimizer to allow the out of sequence withdrawal, and therefore additional requirements must be met (see LCO 3.10.7, "Control Rod Testing – Operating").~~ This testing is performed in accordance with LCO 3.10.7, "Control Rod Testing – Operating" or LCO 3.10.8, "SDM Test – Refueling" where additional requirements are required to be met.

[This page intentionally left blank]

B 3.1 REACTIVITY CONTROL SYSTEMS

B 3.1.2 Reactivity Anomalies

BASES

The information in this section of the reference ABWR DCD, including all subsections, is incorporated by reference with no departures or supplements.

[This page intentionally left blank]

B 3.1 REACTIVITY CONTROL SYSTEMS

B 3.1.3 Control Rod OPERABILITY

BASES

The information in this section of the reference ABWR DCD, including all subsections, is incorporated by reference with no departures, but with the following site-specific supplement. The site specific supplement partially addresses COL License Information Item 16.1.

SURVEILLANCE REQUIREMENTS

SR 3.1.3.4

Verifying the scram time for each control rod to 60% rod insertion position is ≤ [1.44 *] seconds provides reasonable assurance that the control rod will insert when required during a DBA or transient, thereby completing its shutdown function. This SR is performed in conjunction with the control rod scram time testing of SR 3.1.4.1, SR 3.1.4.2, SR 3.1.4.3, and SR 3.1.4.4. SRs in LCO 3.3.1.1, "SSLC Sensor Instrumentation", and LCO 3.3.1.2, "RPS and MSIV Actuation", overlap this Surveillance to provide complete testing of the assumed safety function. The associated Frequencies are acceptable, considering the more frequent testing performed to demonstrate other aspects of control rod OPERABILITY and operating experience, which shows scram times do not significantly change over an operating cycle.*

[This page intentionally left blank]

B 3.1 REACTIVITY CONTROL SYSTEMS

B 3.1.4 Control Rod Scram Times

BASES

The information in this section of the reference ABWR DCD, including all subsections, is incorporated by reference with the following site-specific supplement. The site specific supplement partially addresses COL License Information Item 16.1

~~*Table 3.1.4-1 is modified by two Notes, which state control rods with scram times not within the limits of the Table are considered "slow" and that control rods with scram timesseconds to 60% rod insertion position are considered inoperable as required by SR 3.1.3.4.*~~

LCO

The scram times specified in Table 3.1.4-1 (in the accompanying LCO) are required to ensure that the scram reactivity assumed in the DBA and transient analysis is met. To account for single failure and "slow" scramming control rods, the scram times specified i n Table 3.1.4-1 are faster than those assumed in the design basis analysis. The scram times have a margin to allow up to [~~8.0~~] of the control rods to have scram times that exceed the specified limits (i.e., "slow" control rods) assuming a single stuck control rod (as allowed by LC0 3.1.3, "Control Rod OPERABILITY") and an additional control rod failing to scram per the single failure criterion. The scram times are specified as a function of reactor steam dome pressure to account for the pressure dependence of the scram times. The scram times are specified relative to measurements based on reed switch positions, which provide the control rod position indication. The reed switch closes ("pickup") when the hollow piston passes a specific location and then opens ("dropout") as the hollow piston tube travels upward. Verification of the specified scram times in Table 3.1.4-1 is accomplished through measurement of the "dropout" times.

To ensure that local scram reactivity rates are maintained within acceptable limits, no more than two of the allowed "slow" control rods may occupy adjacent locations.

Table 3.1.4-1 is modified by two Notes, which state control rods with scram times not within the limits of the Table are considered "slow" and that control rods with scram times > [1.44 *~~]~~ seconds to 60% rod insertion position are considered inoperable as required by SR 3.1.3.4.*

This LC0 applies only to OPERABLE control rods since inoperable control rods will be inserted and disarmed (LC0 3.1.3). Slow scramming control rods may be conservatively declared inoperable and not accounted for as "slow" rods.

[This page intentionally left blank]

B 3.1 REACTIVITY CONTROL SYSTEMS

B 3.1.5 Control Rod Scram Accumulators

BASES

The information in this section of the reference ABWR DCD, including all subsections, is incorporated by reference with no departures or supplements.

[This page intentionally left blank]

B 3.1 REACTIVITY CONTROL SYSTEMS

B 3.1.6 Rod Pattern Control

BASES

The information in this section of the reference ABWR DCD, including all subsections, is incorporated by reference with no departures or supplements.

[This page intentionally left blank]

B 3.1 REACTIVITY CONTROL SYSTEMS

B 3.1.7 Standby Liquid Control (SLC) System

BASES

The information in this section of the reference ABWR DCD, including all subsections, is incorporated by reference with no departures or supplements.

[This page intentionally left blank]

B 3.2 POWER DISTRIBUTION LIMITS

B 3.2.1 AVERAGE PLANAR LINEAR HEAT GENERATION RATE (APLHGR)

BASES

The information in this section of the reference ABWR DCD, including all subsections, is incorporated by reference with no departures or supplements.

[This page intentionally left blank]

B 3.2 POWER DISTRIBUTION LIMITS

B 3.2.2 MINIMUM CRITICAL POWER RATIO (MCPR)

BASES

The information in this section of the reference ABWR DCD, including all subsections, is incorporated by reference with no departures or supplements.

[This page intentionally left blank]

B 3.2 POWER DISTRIBUTION LIMITS

B 3.2.3 LINEAR HEAT GENERATION RATE (LHGR) (Non-GE Fuel)

BASES

The information in this section of the reference ABWR DCD, including all subsections, is deleted in accordance with the following departure.

STD DEP 16.3-95

Not Used.

[This page intentionally left blank]

B 3.3 INSTRUMENTATION

B 3.3.1.1 Safety System Logic and Control (SSLC) Sensor Instrumentation

BASES

The information in this section of the reference ABWR DCD, including all subsections, is incorporated by reference with the following departures and site specific supplements. The site specific supplements partially address COL License Information Item 16.1.

STD DEP T1 2.3-1
STD DEP T1 2.4-2
STD DEP T1 2.4-3
STD DEP T1 3.4-1 (All)
STD DEP 8.3-1
STD DEP 16.3-85
STD DEP 16.3-91
STD DEP 16.3-92
STD DEP 16.3-93
STD DEP 16.3-98
STD DEP 16.3-99
STD DEP 16.3-100
STD DEP 16.3-105

BACKGROUND

The SSLC is comprised of four independent logic divisions (Div. I, II, III, IV). Each logic division provides protective action initiation signals for safety system prime movers associated with their division. Each division is a collection of SENSOR CHANNELS which provide data to the LOGIC CHANNELS in the division. The LOGIC CHANNELS provide initiation signals to the appropriate OUTPUT CHANNELS. The OUTPUT CHANNELS cause actuation of the equipment that implements protective actions. The Functions listed in Table 3.3.1.1-1 have at least one SENSOR CHANNEL in one or more divisions.

SSLC is implemented through the Reactor Trip and Isolation System (RTIS), which supports the reactor protection and main steam isolation functions, and the ESF Logic and Control System (ELCS), which supports the accident mitigation functions. Also included in the SSLC are the safety related portions of the Neutron Monitoring System (NMS), the Radiation Monitoring System (RMS), and the Containment Atmospheric Monitoring System (CAMS). *Each SSLC division has ~~five~~*four *main components:*

- *Digital Trip ~~Module~~ ~~Unit~~*Function *(~~DTM~~~~DTU~~*DTF*). The digital trip ~~module unit~~ function i~~s implemented in a microprocessor based devices that acquires~~acquires data for most process parameters to be monitored in its division and generates a protective action initiation signal within its division if the monitored parameter is outside of specified limits. The protective action initiation signal is also transmitted to other divisions associated with the monitored parameter. Most of the parameters* in the ELCS *are transmitted to the*

BACKGROUND
(continued)

*~~DTM~~~~DTU~~*DTF *via the Essential ~~Multiplexing System (EMS) Data~~* Communication Function (ECF) *in its division while* some are received from sub-systems or devices associated with the same division as the *~~DTM~~~~DTU~~*DTF. There are *~~three~~* multiple *~~DTMs~~~~DTUs~~*DTFs in each division. *~~One~~* Some *~~DTMs~~~~DTUs~~*DTFs serve the Reactor Protection System and MSIV closure functions while the others serve the ESF and non-MSIV isolation functions. For the discussions in this LCO the *~~DTMs~~~~DTUs~~*DTFs that implement the RPS and MSIV closure functions are referred to as the "RPS/MSIV *~~DTMs~~~~DTUs~~*DTFs" and the ones that implement the ESF and non-MSIV closure functions are referred to as the "*~~ESF~~*ELCS *~~DTMs~~~~DTUs~~*DTFs".

- *Trip Logic ~~Unit~~*Function *(~~TLU~~*TLF*). The ~~TLU~~*TLF*~~is implemented in a microprocessor based devices that~~ use*s *the parameter trip information from the RPS/MSIV ~~DTMs~~~~DTUs~~*DTFs *in all four divisions to determine if a protective action is required. There is a ~~TLU~~*TLF *in each division. The combinatorial logic used to create protective system actuation commands is performed in the ~~TLU~~*TLF*. Some data used for initiating protective actions are connected directly to the ~~TLUs~~*TLFs*.*

- Digital Logic Controller (DLC) performing the *Safety System Logic ~~Unit (SLU)~~* Function (SLF) of the ELCS*. The ~~SLU~~*DLC of the ELCS *is implemented in microprocessor based device*s *that use~~s~~ the parameter trip information from the ~~ESF~~*ELCS *~~DTMs~~~~DTUs~~*DTFs *in all four divisions to determine if a protective action is required. The combinatorial logic used to create protective system actuation commands is performed in the ~~SLU~~*DLC*.* ESF logic processing is implemented with either a single channel within each division, redundant channels within each division with two microprocessor channels (i.e., both channels must be initiated for complete actuation of the function), or dual channels within each division with a two-out-of-two vote at the outputs of the DLC, and may be bypassable. *~~The potential for spurious actuation due to failure of an SLU is greatly reduced by employing two SLUs in parallel with a two-out-of-two output confirmation required before component or system actuation is permitted. Some~~*

BACKGROUND
(continued)

~~*data used for initiating protective actions are connected directly to the SLUs. There are two sets of dual redundant SLUs in each of three divisions (DIV I, II, & III).*~~

- *Bypass* Interlock Function.~~*Unit (BPU). The BPU provides the bypass and bypass interlock functions. A BPU in each division provides bypass signals to the TLU, SLU and OLU in its division.*~~ *The bypass* ~~*unit contains logic to enforce*~~interlock function enforces *restrictions on bypassing multiple divisions of related Functions.*

~~*Most of the parameters are analog signals that are digitized by the EMS. Each division has one dual redundant EMS that transmits data to the DTMs in the same division.*~~ *The* ~~*DTM*~~*DTU*DTF*processing logic compares* ~~*this*~~digitized analog signal *data against numeric trip setpoints to determine if a protective action is required.*

Typically, a process sensor in each of the four divisions provides a signal ~~*to the EMS*~~ to the ~~*DTMs*~~*DTUs*DTFs *in its division. Exceptions are:*

- *Some parameters are received by the* ~~*DTM*~~*DTU*DTF*as discrete (i.e. 2 state) actuation data signals directly from other systems or devices (e.g. MSIV closure signals, PRRM system).*

- *Some parameters are received by the* ~~*DTM*~~*DTU*ELCS DTF ~~*as analog signals directly from process sensors*~~through the ECF from remote digital logic controllers (RDLCs) ~~*(e.g. Turbine 1st stage pressure)*~~*.*

- *Some parameters are received directly by the* ~~*SLU*~~ESF DLC *or* the RTIS ~~*TLU*~~TLF *as discrete (i.e. 2 state) actuation data signals directly from other systems (e.g. NMS signals, CUW, ECCS, manual initiation signals). These parameters are covered by other LCOs, except the NMS parameters are covered by this LCO.*

- *Some parameters are received by the* ~~*SLU*~~ESF DLC *as analog signals directly from process sensors (e.g. RHR pump discharge pressure). These parameters are covered by other LCOs.*

- *Parameters that are used for control of equipment associated with a specific division may use one or two sensors (e.g. ECCS pump pressure interlocks, manual initiation of an ECCS pump). These parameters are covered by other LCOs.*

- *Some parameters may use multiple sensors within a division to provide additional redundancy (e.g. Level 1) or where a distributed parameter is monitored (e.g. Suppression pool temperature).*

- *Some parameters (e.g. SLCS and FWRB initiation on Reactor Vessel Water Level-Low, Level 2) are connected to signal processing electronics that are separate from the normal SSLC processor.* ~~*An Analog Trip Module (ATM) and logic card*~~A separate I/O unit *is provided in each division for these parameters.*

BACKGROUND (continued)

The SSLC hardware and logic is arranged so the system uses two-out-of four coincident initiation logic (i.e. 2 signals for the same parameter must exceed the setpoint before a protective action initiation command is issued). The interdivisional initiation data used in the ~~SLU/TLU~~ ESF DLC / RTIS *~~TLU~~*TLF *logic is transmitted between divisions by isolated fiber optic links from the ~~DTMs~~~~DTUs~~*DTFs *or other systems in the redundant divisions.*

There are two basic segments that are used to initiate protective actions. The SENSOR CHANNEL segment consists of the instrumentation portion which encompasses the sensors, sensor data conversion, sensor data transmission path ~~(i.e. EMS ECF), the mechanisms responsible for acquiring data from the EMS ECF,~~ and the setpoint comparison. Capability is provided to manually trip individual SENSOR CHANNELS. Interlocks are provided to prevent placing more than one SENSOR CHANNEL for a given Function in trip at the same time.

*The SENSOR CHANNELS and LOGIC CHANNELS are replicated in ~~four~~ independent and separated divisions of equipment. The sensors ~~and EMS ECF~~ are not considered to be part of the SSLC. However, the sensors and the analog to digital conversion ~~portion of the EMS ECF~~*function *are addressed by this LCO since these devices can effect the results of surveillances required by this LCO.*

*Various bypasses are provided to permit on-line maintenance and calibration. The "division of sensors bypass" disables the ~~DTM DTU~~*DTF*inputs to the associated ~~SLU~~* ESF DLC *and* RTIS *~~TLU~~*TLF *in one division. The direct trip inputs to the ~~SLU~~* ESF DLC *and* RTIS *~~TLU~~*TLF *are not bypassed. Interlocks are provided so only one division of sensors at a time can be placed in bypass. When a division of sensors is bypassed the sensor trip logic in all ~~SLUs~~* ESF DLCs *and* RTIS *~~TLUs~~*TLFs *becomes 2 out of 3 and all of them are capable of providing signals to equipment used to provide protective action. Other bypasses are used to manually or automatically disable selected Functions when they are not required.*

*The RPS/MSIV OUTPUT CHANNEL may be bypassed with the ~~TLU~~*TLF *logic output bypass which disables the trip input to the ~~SLU~~* Output Logic Unit (OLU) *in one logic division. Interlocks are provided so only one division at a time can be placed in ~~TLU~~*TLF *logic output bypass. When a logic division is bypassed the final actuation logic becomes 2/3 for the scram and MSIV closure actions. The sensor trip logic within the unbypassed logic divisions remains as 2/4.*

BACKGROUND (continued)

~~*If one of the redundant SLUs in a division is inoperable it can be bypassed at theassociated OUTPUT CHANNELS, which changes the actuation logic to one-out-of-one in the associated division.*~~ Some ESF logic processing may be bypassed for a redundant channel, which disables the trip output to the OLU altering the logic format from 2/2 to 1/1 for that ESF action. The equipment involved with each of these systems is described in the Bases for LCO 3.3.1.4, "ESF Actuation Instrumentation."

The NMS contains a separate *bypass which causes one of the NMS APRM* sensor *divisions to be bypassed in the NMS logic. The trip logic* ~~*in*~~ for NMS APRM sensor inputs ~~*all four NMS APRM divisions*~~ *then becomes 2/3* ~~*and all divisions will send a trip signal to*~~ in *all four SSLC divisions* ~~*when appropriate*~~*.* ~~*This bypass is therefore transparent to the SSLC.*~~ *Interlocks are provided so only one NMS APRM division* at a time *can be placed in bypass.*

The SSLC includes a variety of self-~~*test*~~diagnostic *and monitoring features.* ~~*The self-test in each microprocessor-based device checks the health of the microprocessor, RAM, ROM, communications, and software. Any detected failure that could degrade protective action initiation activates an annunciator and provides fault indication to the board level. Transient failures (e.g. data transmission bit error) are logged to provide maintenance information. Monitoring of the power supplies, card out of file interlocks, and memory batteries (if used) causes an INOP/TRIP in addition to activating an annunciator. If the self-test detects a failure in one of the redundant SLUs within a division, the failed SLU is automatically bypassed (initiation logic becomes one-out-of-one) and an alarm is generated.*~~

~~*Signal validity tests are performed on the data received from the EMS ECF. If a permanent error is detected on a particular parameter the logic state for that parameter will default to a tripped state for the signal and an annunciator or alarm will be activated. Soft (i.e., transient) errors will be logged to provide maintenance information.*~~

STD DEP T1 2.3-1

Reactor Protection System (RPS)

The RPS, as shown in Reference 3, uses four independent divisions each containing sensors, ~~*the EMS ECF, the SSLC*~~ ~~*DTUs*~~DTFs, ~~*TLUs*~~TLFs, *OLUs, load drivers, and switches that are necessary to cause initiation of a reactor scram. Functional diversity is provided by monitoring a wide range of dependent and independent parameters. The input parameters to the SSLC scram logic are from devices that monitor:*

- ~~*main steam tunnel radiation*~~

Two hardwired manual scram switches which completely bypass the ~~*EMS ECF, the SSLC*~~ RTIS*, and load drivers are provided. The switches on the main control console remove power from the scram pilot valve solenoids and also energize the air header dump valve solenoids (backup scram). When the reactor mode switch is in the SHUTDOWN position, manual scram is also initiated. The manual scram functions are covered in LCO 3.3.1.2.*

BACKGROUND (continued)

Reactor Core Isolation Cooling System (RCIC)

The RCIC system is initiated automatically when either high drywell pressure or low reactor vessel water Level 2 is detected and produces the design flow rate within a specified time. The system then functions to provide makeup water to the reactor vessel until the reactor vessel water level is restored. RCIC flow will shut down automatically when Reactor Water Level - High, Level 8 is detected. In addition, turbine overspeed and high exhaust pressure equipment protection signals will trip the turbine. The RCIC system is also shut down by the isolation feature described in the isolation section of this LCO.

High Pressure Core Flooder System (HPCF)

The HPCF is provided with system level and device level manual controls which permit operator control of the systems. The manual controls for HPCF C diverse logic *system initiation are hardwired and completely bypass the ~~EMS~~* ECF *and SSLC.*

STD DEP 16.3-85

Automatic Depressurization System (ADS)

The motive power for the opening ~~the~~ ADS valves is from local accumulators supplied by the high pressure nitrogen supply systems (Division I and II). The ADS accumulators have sufficient capacity to operate the safety relief valve ~~twice with the drywell at 70% of design pressure~~ one time at drywell design pressure or five times at normal drywell pressure *with no external source of nitrogen.*

Two ADS subsystems, ADS 1 and ADS 2 are provided. ADS 1 is controlled by a division I ~~SLU~~ DLC *Pair and ADS 2 is controlled by a division II ~~SLU~~* DLC *Pair. Each ADS division controls one of the two separate solenoid operated pilot valves on each Safety/Relief Valve (SRV) assigned to the ADS. Energizing either pilot valve causes the SRV to open.*

The reactor vessel low water Level 1 for ADS is sourced from ~~8~~ 4 *level transmitters. ~~One set of four is used by the ADS 1 logic and the other set is used by the ADS 2 logic.~~ The low water Level 1.5 ATWS ADS inhibit signal is sourced from 4 level transmitters that are different from the Level 1 transmitters.*

ISOLATION

The isolation instrumentation includes the sensors, the ~~EMS~~ ECF*, the ~~SSLC~~* ELCS*, load drivers, and switches that are necessary to cause closure of the valves provided to close off flow paths that could result in unacceptable fission product release. Functional diversity is provided by monitoring a wide range of independent parameters. The input data to the isolation logic originates in devices that monitor local parameters (e.g. high temperatures, high radiation, high flows) as well as primary system and containment system parameters that are indicative of a leak.*

BACKGROUND (continued)

STD DEP T1 2.3-1

1. Main Steam Line Isolation

The Functions used to initiate MSIV closure are:

- ~~*Main Steam Tunnel Radiation - High*~~

2. Containment Isolation

Containment isolation closes valves (except MSIVs) and dampers in effluent pipes and ducts that penetrate the primary and/or secondary containment to prevent fission product release and initiates the standby gas treatment system (SGTS) to remove fission products from the secondary containment atmosphere. Isolation initiation is performed in the division I, II and III ESF ~~SLUs~~ DLCs. The Functions used for containment isolation initiation are:

- *Drywell Sump Drain Low Conductivity Water (LCW) Radiation - High*

  (Note: Single signal from PRRM system to division I ~~SLU~~ DLC only. This signal is covered by LCO 3.3.1.4, "ESF Actuation Instrumentation".)

- *Drywell Sump Drain High Conductivity Water (HCW) Radiation - High.*

  (Note: Single signal from PRRM system to division I ~~SLU~~ DLC only. This signal is covered by LCO 3.3.1.4, "ESF Actuation Instrumentation".)

- *Reactor Building Area/Fuel Handling Area Exhaust Air Radiation - High.*

  (Note: Signal received directly from PRRM discrete outputs to the ~~DTMs~~ DTFs.)

BACKGROUND (continued)

3. Reactor Core Isolation Cooling (RCIC) System Isolation

*The RCIC isolation protects against breaks in the steam supply line to the RCIC turbine. RCIC isolation trip calculations are performed in the ~~DTMs~~ ~~DTUs~~*DTFs *in all four ESF divisions. Isolation initiation for the inboard isolation valve is performed in the division I ESF ~~SLU~~* DLC *and for the outboard isolation valves in the division II ~~SLU~~* DLC *~~pairs~~. The Functions used for RCIC isolation initiation are:*

STD DEP T1 2.4-3

- *RCIC Equipment Area Temperature - High*
- *RCIC Steam Supply Line Pressure - Low*
- *RCIC Steam Supply Line Flow - High*
- *RCIC Turbine Exhaust ~~Diaphragm~~ Pressure - High. (This Function is addressed in LCO 3.3.1.4, "ESF Actuation Instrumentation".)*

STD DEP T1 3.4-1

4. Reactor Water Cleanup System Isolation

This isolation protects against breaks in lines carrying CleanUp Water (CUW) and also serves to align CUW valves so they do not interfere with ECCS injection. Isolation initiation for the inboard isolation valve is performed in the division II ESF ~~SLU pair~~ DLC *and for the outboard isolation valves in the division I ESF ~~SLU pair~~* DLC*. The Functions used for CUW line isolation/ECCS lineup initiation are:*

- *Reactor Vessel Steam Dome Pressure - High. (This Function is used only in division I ~~SLU~~* DLC *actuation logic to close the head spray valve.)*

5. Shutdown Cooling System Isolation

This isolation protects against breaks in lines used in the shutdown cooling mode of the RHR and also serves to align RHR valves so they do not interfere with ECCS injection. Isolation/injection lineup initiation for the RHR loops are performed in the ESF ~~SLUs~~ DLCs *as follows:*

BACKGROUND
(continued)

STD DEP T1 2.4-2 *OTHER ESF FUNCTIONS*

STD DEP 8.3-1

1. Diesel Generator (DG) Initiation. The DGs are initiated on high drywell pressure, low reactor water Level 1.5 and Level 1, or Essential ~~6.9~~ 4.16 kV bus undervoltage (covered in LCO 3.3.1.4, "ESF Actuation Instrumentation").

3. Reactor Building Cooling Water/Service Water Actuation. This Feature is actuated on high drywell pressure, low Level 1, or ~~6.9~~ 4.16 kV emergency bus undervoltage signals (covered in LCO 3.3.1.3).

7. Feedwater Line Break Mitigation. The trip of condensate pumps is initiated upon detection of concurrent high drywell pressure and high feedwater differential pressure.

ATWS MITIGATION

The Standby Liquid Control System (SLCS) initiation and Feedwater Runback (FWRB) ATWS mitigation features are performed by SSLC circuitry diverse to and independent ~~of the microprocessor-based devices~~ of the primary protective system functions of RTIS and ELCS*. These Features are initiated by Reactor Vessel Steam Dome Pressure - High or Reactor Water Level-Low, Level 2 Functions when the SRNM ATWS permissive is active. The initiation signals are provided by ~~Analog Trip Modules (ATM)~~* separate I/O units *that are located in the SSLC cabinets.*

There is a~~n ATM~~ separate I/O unit *in each division for each of the functions. The ~~ATM~~* separate I/O units *are connected directly to the sensors in the division associated with the ~~ATM~~ I/O unit. The outputs of all four ~~ATMs~~ I/O units are connected to four logic units (one in each division) using suitable isolation.*

APPLICABLE SAFETY ANALYSIS, LCO, AND APPLICABILITY

The actions of the SSLC are assumed in the safety analyses of References 1, 2, and 8. The SSLC initiates appropriate protective actions when a monitored parameter is outside of a specified Allowable Value to preserve the integrity of the fuel cladding, the Reactor Coolant Pressure Boundary (RCPB), and the containment. The Allowable Values ~~given in Table 3.3.1.1-1~~ are calculated using a prescribed setpoint methodology. The SSLC provides initiation signals for RPS, ESF and plant isolation.

SSLC instrumentation satisfies Criterion 3 of the NRC Policy Statement. Functions not specifically credited in the ABWR safety analysis are retained for the overall redundancy and diversity of the RPS as required by the NRC approved licensing basis.

The OPERABILITY of the SSLC is dependent on the OPERABILITY of the Functions specified in Table 3.3.1.1-1. Each Function must have a required

APPLICABLE SAFETY ANALYSIS, LCO, and APPLICABILITY (continued)

number of OPERABLE divisions, with their setpoints within the specified Allowable Value, where appropriate. The signal processing channels within each division are calibrated consistent with applicable setpoint methodology assumptions. Each channel must also respond within its specified response time.

Where applicable, Allowable Values are ~~specified~~ determined *for each SSLC Function specified in Table 3.3.1.1-1. Nominal trip setpoints are specified in the setpoint calculations. The nominal setpoints are selected to ensure that the effective trip points do not exceed the Allowable Value between successive CHANNEL CALIBRATIONS. Operation with an effective trip point less conservative than the nominal trip setpoint, but within its Allowable Value, is acceptable. A channel is inoperable if the effective trip point is outside the Allowable Value.*

Setpoints are those predetermined values of output at which an action should take place. The numeric setpoints provided in the SSLC processor data base are compared to the measured process parameter (e.g., reactor vessel water level), and when the measured value of the process parameter exceeds the setpoint, the logic in the signal processors declares a trip condition for the parameter.

*This LCO covers all Functions that use connections to the ~~DTMs~~ ~~DTUs~~*DTFs *and the NMS Functions. Functions, other than NMS, that are connected to the ~~SLUs~~ ESF* DLCs *or* RTIS *~~TLUs~~*TLFs *are covered in the system actuation LCOs.*

1.a & b. Startup Range Neutron Monitor (SRNM) Neutron Flux - High/Short Period

*For each division, a high flux, short period, or INOP trip from any one SRNM channel will result in a trip signal from that division. The SRNM trip data is transmitted to the ~~TLUs~~*TLFs *in the ~~SSLC~~*RTIS*. The division of sensor bypass in the RPS portion of the ~~SSLC~~*RTIS *does not bypass the SRNM trip signal input.*

2.a. Average Power Range Monitor Neutron Flux – High, Setdown

The APRM System is made up of four independent divisions. Each APRM division transmits a trip signal to all four RPS ~~TLUs~~ TLFs *using suitable isolators. The system is designed to allow one division to be bypassed. Four divisions of APRM Neutron Flux-High/Setdown are required to be OPERABLE to ensure that no single failure will preclude a scram from this Function on a valid signal. In addition, to provide adequate coverage of the entire core, at least ~~[~~ 51~~]~~ LPRM inputs are required for each APRM division, with at least two LPRM inputs from each of the four axial levels at which the LPRMs are located.*

2.b. Average Power Range Monitor Simulated Thermal Power - High, Flow Biased

APPLICABLE SAFETY ANALYSIS, LCO, AND APPLICABILITY (continued)

Each APRM division receives a total recirculation flow data value ~~from the EMS~~ ECF. The flow is measured using 4 independent flow transmitters that monitor the core plate pressure drop.

The Allowable Value for the upper limit is based on analyses that take credit for the Average Power Range Monitor Simulated Thermal Power-High/Flow Biased Function for the mitigation of the loss of feedwater heater event. The thermal power time constant of < ~~[~~7~~]~~ seconds is based on the fuel heat transfer dynamics.

2.e. Rapid Core Flow Decrease

*The scram signal from this function is sent to the RPS ~~TLUs~~*TLFs *over the same data transmission path as the APRM trips. The APRM System is divided into four divisions. Each APRM division sends a trip signal to all four RPS ~~TLUs~~*TLFs *via suitable isolators. The rate of flow decrease is calculated from total recirculation flow data ~~acquired from the EMS~~ ECF. The flow is measured using 4 independent flow transmitters that monitor the core plate pressure drop.*

The Neutron Monitoring System Rapid Core Flow Decrease Function is required to be OPERABLE in MODE 1 when thermal power is greater than ~~[80~~ 75~~]~~% RTP where there is a possibility of a rapid flow decrease jeopardizing the MCPR SL. At lower power levels a trip of all recirculation pumps will not violate the MCPR SL.

3.a., b. & c. Reactor Vessel Steam Dome Pressure – High

*Each ~~DTM~~ ~~DTU~~*DTF*receives a data value representing measured reactor pressure ~~from the EMS~~ ECF in its division and compares the value against a numeric setpoint to determine if a trip is required for Functions 3.a and 3.b. Each ~~ATM~~* I/O unit *receives a* separate *signal directly from the process sensors for Function 3.c. The ~~ATM~~* I/O unit *compares the signal with a setpoint to generate the ATWS mitigation Feature initiation signal.*

Reactor pressure is measured using four independent (separate vessel taps, instrument piping, etc) pressure transmitters connected to the RPV steam space. The four sensors are connected to both the ~~RMU~~ DTF *and ~~ATM~~* I/O unit *in the same division. The Reactor Vessel Steam Dome Pressure - High Allowable Value is chosen to provide a sufficient margin to the ASME Section III Code limits during pressurization events.*

4. Reactor Vessel Steam Dome - Low (Injection Permissive)

*Each ESF ~~DTM~~ ~~DTU~~*DTF*receives a data value representing measured reactor pressure ~~from the EMS~~ ECF in its division and compares the value against a numeric setpoint to determine if a trip is required.*

APPLICABLE SAFETY ANALYSIS, LCO, and APPLICABILITY (continued)

5. Reactor Vessel Water Level – High, Level 8

*Each ESF ~~DTM~~ ~~DTU~~*DTF*receives a data value representing measured reactor vessel water level ~~from the EMS~~ ECF in its division and compares it against a numeric setpoint to determine if a Level 8 trip is required.*

6.a. & b. Reactor Vessel Water Level – Low, Level 3

*Each ~~DTM~~ ~~DTU~~*DTF*receives a data value representing measured reactor vessel level ~~from the EMS~~ ECF in its division and compares it against a numeric setpoint to determine if a Level 3 trip is required.*

7.a., b. & c. Reactor Vessel Water Level – Low, Level 2

*Each ESF ~~DTM~~ ~~DTU~~*DTF*receives a data value representing measured reactor vessel water level ~~from the EMS~~ ECF in its division and compares it against a numeric setpoint to determine if a Level 2 trip is required for Functions 7.a and 7.b. Each ~~ATM~~* I/O unit *receives a separate signal directly from the process sensors for Function 7.c. The ~~ATM~~* I/O unit *compares the signal with a setpoint to generate the ATWS mitigation Feature initiation signal.*

The reactor water level signals originate in four independent (separate vessel taps, instrument piping, etc.) level transmitters that sense the pressure difference between a constant column of water (reference leg) and the effective water column (variable leg) in the vessel. The four sensors are connected to both the ~~ATM~~ I/O unit *and ~~RMU~~* DTF *in the same division.*

8.a., b., & c. Reactor Vessel Water Level – Low, Level 1.5

*Each ~~DTM~~ ~~DTU~~*DTF*receives a data value representing measured reactor vessel water level ~~from the EMS~~ ECF in its division and compares it against a numeric setpoint to determine if a Level 1.5 trip is required.*

9.a., b. & c. Reactor Vessel Water Level – Low, Level 1

*Each ESF ~~DTM~~ ~~DTU~~*DTF*receives two data values from independent transmitters representing measured reactor vessel water level ~~from the EMS~~ in its division and compares them separately against a numeric setpoint to determine if a Level 1 trip is required. The reactor water level signals originate in eight level transmitters that sense the pressure difference between a constant column of water (reference leg) and the effective water column (variable leg) in the vessel. Data values from four independent transmitters (separate vessel taps, instrument piping, etc.) are used for initiating ADS A, LPFL A & C, CAMS A (9.a), and for the isolation logic (9.c). Four additional transmitters are used to provide data values for initiating the Diesel Generators, the Reactor Building Cooling Water, ADS B, CAMS B and LPFL B (9.b).*

APPLICABLE SAFETY ANALYSIS, LCO, and APPLICABILITY (continued)

10. Main Steam Isolation Valve – Closure

*Each RPS/MSIV ~~DTM~~ ~~DTU~~*DTF *directly receives ~~(i.e. not via the EMS ECF)~~ valve closure data from both the outboard and inboard MSIVs on a single steamline.*

~~11.a., b., & c.~~ 11.a., b., c., & d. *Drywell Pressure – High*

High pressure in the drywell could indicate a Reactor Coolant Pressure Boundary (RCPB) break or a Feedwater Line Break *inside the drywell.*

- *ESF Initiation (11.b). Various ESF features that are initiated on this Function are SGTS, CAMS, RCW and RSW.*
- Feedwater Line Break Mitigation Initiation (11.d). The feedwater line break mitigation feature is initiated on this function concurrent with a feedwater line break differential pressure – high (Function 15).

STD DEP T1 2.4-2

*Each ~~DTM~~ ~~DTU~~*DTF *~~(both the RPS/MSIV and ESF DTMs DTUs)~~ receives a data value representing measured drywell pressure ~~from the EMS ECF~~ in its division and compares it against a numeric setpoint to determine if a trip is required.*

ESF, ~~and~~ isolation, and feedwater line break mitigation initiation (Functions 11.b, ~~and~~ 11.c, and 11.d*) are required in MODES 1, 2, and 3 where considerable energy exists in the RCS, resulting in the limiting transients and accidents.*

12. CRD Water Header Charging Pressure - Low

*Each RPS/MSIV ~~DTM~~ ~~DTU~~*DTF *receives a measured CRD charging header pressure value ~~from its associated EMS ECF~~ and compares it against a numeric setpoint to determine if a trip is required.*

13. Turbine Stop Valve – Closure

*Turbine Stop Valve – Closure signals are initiated by a position switch on each of the four stop valves. Each position switch sends a discrete signal directly to one of the four RPS/MSIV ~~DTMs~~ ~~DTUs~~*DTFs *~~(i.e. does not come via the EMS ECF)~~. The logic for the Turbine Stop Valve – Closure Function is such that a trip will occur when closure of two or more TSVs is detected.*

This Function must be enabled at THERMAL POWER > *40% RTP. This is normally accomplished automatically using the data from four independent pressure transmitters sensing turbine first stage pressure. Turbine first stage pressure data is received in each RPS ~~DTU~~*DTF *~~via the EMS~~.*The Turbine Stop Valve – Closure Function is automatically bypassed when thermal power is less than the specified condition of applicability. The thermal power value calculated for the Average Power Range Monitor Simulated Thermal Power-High, Flow Biased Function is used to implement the bypass.

APPLICABLE SAFETY ANALYSIS, LCO, and APPLICABILITY (continued)

14. Turbine Control Valve Fast Closure, Trip Oil Pressure - Low

*Turbine Control Valve Fast Closure, Trip Oil Pressure - Low signals are initiated from a pressure sensor on each of the four turbine control valve hydraulic mechanisms. The pressure sensor data associated with each control valve is transmitted directly to one of the four RPS/MSIV ~~DTMs~~ ~~DTUs~~*DTFs~~ (i.e., are not transmitted via the EMS ECF)~~. This Function must be enabled at THERMAL POWER ≥40% RTP as described for the Turbine Stop Valve – Closure Function.*

STD DEP T1 2.3-1

~~*15.a. & b. Main Steam Tunnel Radiation High*~~

~~*High radiation in the steam line tunnel indicates a potential gross fuel failure. The MSIVs are therefore closed when high steam tunnel radiation (15.b) is detected to prevent possible violation of the offsite release limits. The MSIV closure causes a loss of the normal heat sink which results in reactor pressure, neutron flux, and heat flux transients that must be limited. Therefore, a reactor scram (15.a) is also initiated on high radiation in the main steam tunnel to rapidly reduce power and therefore the severity of the transients. This Function is not specifically credited in any ABWR safety analysis, but it is retained for overall redundancy and diversity as required by the NRC approved licensing basis.*~~

~~*High steam tunnel radiation is detected using four radiation detectors located such that each detector can sense all four main steam lines. One radiation detector is connected to each division of the Process Radiation Monitoring (PRRM) System trip signals are generated when the radiation level exceeds its setpoint. A discrete signal is sent directly from the PRRM divisions to the RPS DTM in the same division (i.e. does not pass through the EMS).*~~

~~*The Allowable Value for this Function is set low enough to provide reasonable assurance that protective action will occur due to excessive radiation but high enough to prevent spurious scrams due to normal steam tunnel radiation levels.*~~

~~*Four divisions of the Steam Line Tunnel Radiation - High Function are required to be OPERABLE to provide confidence that no single failure will preclude protective action from this Function on a valid signal.*~~

~~*RPS initiation (Function 15.a) is required to be OPERABLE in MODES 1 and 2 consistent with the applicability of the RPS in LCO 3.3.1.2, "RPS and MSIV Actuation." The MODES applicability of RPS does not apply to this Function because there is no flow in the steamlines.*~~

~~*Isolation initiation (Function 15.b) is required to be OPERABLE in MODES 1, 2, and 3 consistent with the applicability of LCO 3.6.1.1, "Primary Containment."*~~

STD DEP T1 2.4-2

APPLICABLE SAFETY ANALYSIS, LCO, AND APPLICABILITY (continued)

15. Feedwater Line Differential Pressure

High feedwater line differential pressure could indicate a Feedwater Line Break inside the drywell. This function, concurrent with the drywell pressure- high Function (Function 11.d) provides a condensate pump trip signal to reduce the amount of energy added to the drywell. Feedwater line break mitigation initiation is not specifically credited in any ABWR safety analysis, but it is retained for overall redundancy and diversity as required by the NRC approved licensing basis.

Each ~~*DTU*~~DTF ~~*(both the RPS/MSIV and ESF DTUs)*~~ receives a data value representing measured drywell pressure ~~*from the ECF in its division*~~ and compares it against a numeric setpoint to determine if a trip is required. Feedwater line differential pressure is measured using four differential pressure transmitters connected to the feedwater lines. The Allowable Value was selected to be as low as possible and be indicative of a LOCA inside primary containment.

Four divisions of Feedwater Line Differential Pressure - High Function are required to be OPERABLE to ensure that no single instrument failure will preclude protective action from this Function on a valid signal.

Feedwater line break mitigation initiation is required to be OPERABLE in MODES 1, 2, and 3 where considerable energy exists in the RCS, resulting in the limiting transients and accidents.

16.a. & b. Suppression Pool Temperature - High

*The high temperature trip data from the suppression pool temperature monitoring system is connected to the RPS/MSIV ~~DTM~~ ~~DTU~~*DTF *in the same division.*

17. Condensate Storage Tank Level – Low

*Each ESF ~~DTM~~ ~~DTU~~*DTF *receives a data value representing measured condensate storage tank level ~~from the EMS~~ ECF in its division and compares it against a numeric setpoint to determine if a transfer is required. Condensate Storage Tank Level -Low signals originate from four level transmitters. The Condensate Storage Tank Level - Low Function Allowable Value is high enough to ensure adequate pump suction head while water is being taken from the CST.*

Four channels of the Condensate Storage Tank Level - Low Function are required to be OPERABLE to provide confidence that no single failure will preclude a transfer of the suction source on a valid signal. The Function is required to be OPERABLE in MODE 1 and in MODES 2 and 3. This Function must also be OPERABLE in MODES 4 and 5 when HPCF is used to satisfy the requirement that at least 2 ECCS system be OPERABLE with RPV Level less than [23] feet above the vessel flange. The applicability basis is the same as given for RCIC and HPCF in LC0 3.5.1, "ECCS-Operating" and LC0 3.5.2, "ECCS-Shutdown".

APPLICABLE SAFETY ANALYSIS, LCO, AND APPLICABILITY (continued)

18. Suppression Pool Water Level – High

*Each ESF ~~DTM~~ ~~DTU~~*DTF *receives a data value representing measured suppression pool water level ~~from the EMS ECF~~ in its division and compares it against a numeric setpoint to determine if a transfer is required. Suppression Pool Water Level – High data originates in four level transmitters. The Allowable Value for the Suppression Pool Water Level - High Function is chosen to ensure that RCIC and HPCF will be aligned for suction from the suppression pool before the water level reaches the point at which suppression pool design loads would be exceeded.*

Four channels of the Suppression Pool Temperature-High Function are required to be OPERABLE to provide confidence that no single failure will preclude a transfer of the suction source on a valid signal. The Function is required to be OPERABLE in MODE 1 and in MODES 2 and 3. This Function must also be OPERABLE in MODES 4 and 5 when HPCF is used to satisfy the requirement that at least 2 ECCS system be OPERABLE with RPV Level less than ~~[~~23~~]~~ feet above the vessel flange. The applicability basis is the same as given for RCIC and HPCF in LC0 3.5.1, "ECCS-Operating" and LC0 3.5.2, "ECCS-Shutdown".

19. Main Steam Line Pressure – Low

*The pressure transmitter signals are digitized and transmitted to the RPS/MSIV ~~DTM~~ ~~DTUs~~*DTFs *~~via the EMS ECF~~.*

20. Main Steam Line Flow – High

*The flow transmitter signals are digitized and transmitted to the RPS/MSIV ~~DTM~~ ~~DTUs~~*DTFs *~~via the EMS ECF~~.*

21. Condenser Vacuum - Low

*The pressure transmitter signals are digitized and transmitted to the RPS/MSIV ~~DTM~~ ~~DTUs~~*DTFs *~~via the EMS ECF~~.*

22. Main Steam Tunnel Temperature – High

*The temperature signals are digitized and transmitted to the RPS/MSIV and ESF ~~DTM~~ ~~DTUs~~*DTFs *~~via the EMS ECF~~.*

The Main Steam Tunnel Temperature-High Allowable Value is chosen to detect a leak equivalent to ~~[~~95~~]~~ L/min. This Function is required to be OPERABLE in MODES 1, 2, and 3 consistent with the Applicability for LC0 3.6.1.1, "Primary Containment."

APPLICABLE SAFETY ANALYSIS, LCO, AND APPLICABILITY (continued)

23. Main Turbine Area Temperature – High

The temperature transmitter data is digitized and transmitted to the RPS/MSIV ~~DTM~~ ~~DTUs~~DTFs in each division~~ via the associated EMS ECF~~.

24a. & 24b. Reactor Building Area/Fuel Handling Area, Exhaust Air Radiation – High

Trip signals from the PRRM divisions are sent to the ESF ~~DTM~~ ~~DTUs~~DTFs in the same division.

25. RCIC Steam Line Flow – High

The RCIC Steam Line Flow – High data originates in four transmitters that are connected to the RCIC steam lines. The transmitter signals are digitized and transmitted to the ESF ~~DTM~~ ~~DTUs~~DTFs~~ via the EMS ECF~~.

26. RCIC Steam Supply Line Pressure – Low

Low RCIC steam supply line pressure indicates that the pressure of the steam in the RCIC turbine may be too low to continue operation of the turbine. This isolation is for equipment protection and is not assumed in any transient or accident analysis for the ABWR. However, it also provides a diverse signal to indicate a possible system break. These instruments are included in the Technical Specifications (TS) because of the potential for risk due to possible failure of the instruments preventing RCIC initiations.

The RCIC Steam Supply Line Pressure - Low data originates in four pressure transmitters that are connected to the system steam line. The transmitter signals are digitized and transmitted to the ESF DTFs~~DTM via the EMS~~.

Four channels of the RCIC Steam Supply Line Pressure - Low Function are required to be OPERABLE to ensure that no single instrument failure can preclude isolation initiation or cause a spurious isolation.

The Allowable Value is selected to be high enough to prevent damage to the system's turbines. This Function is required to be OPERABLE in MODES 1, 2, and 3 consistent with the Applicability for LCO 3.6.1.1, "Primary Containment."

27. RCIC Equipment Area Temperature – High

RCIC equipment area temperature data originates in temperature transmitters that are appropriately located to detect potential leaks in RCIC steam lines. The temperature transmitter data is digitized and transmitted to the ESF ~~DTM~~ ~~DTUs~~DTFs~~ via the EMS ECF~~.

APPLICABLE SAFETY ANALYSIS, LCO, AND APPLICABILITY (continued)

28. RHR Area Temperature – High

RHR Area Temperature – High data originates in temperature transmitters that are appropriately located to detect leaks in RHR equipment. Four instruments monitor each of the three RHR areas. The temperature transmitter outputs are digitized and transmitted to the ESF ~~DTM~~ ~~DTUs~~DTFs ~~via the EMS ECF~~.

29. CUW Differential Flow – High

Differential mass flow is calculated in the ~~DTM~~ ~~DTU~~DTF in each ESF division as the sum of the return and blowdown flows subtracted from the suction flow.

The differential pressure transmitter and temperature transmitter data is digitized and transmitted to the ESF ~~DTM~~ ~~DTUs~~DTFs ~~via the EMS ECF~~. If the calculated flow difference is too large, each ~~DTM~~ ~~DTU~~DTF generates an isolation signal.

30, 31, & 32, CUW Area Temperatures – High

There are twelve temperature transmitters that provide input to the CUW Area Temperature – High Functions (four per area). The temperature data is digitized and transmitted to the ~~DTM~~ ~~DTUs~~DTFs ~~via the EMS ECF~~.

STD DEP 16.3-91

33. ~~Control Building Basement Equipment Cubicle~~ RCW/RSW Heat Exchanger Room *Water Level – High*

There are four water level transmitters that provide input to the RCW/RSW Heat Exchanger Room Water Level – High Function per RCW/RSW division. The water level data is digitized and transmitted to the ~~DTM~~ ~~DTUs~~DTFs ~~via the EMS ECF~~.

The RCW/RSW Heat Exchanger Room Water Level ~~1~~ High Allowable Values are set low enough to detect a break of the RSW piping.

ACTIONS

A.1, A.2.1.1, A.2.1.2, A.2.2.1, and A.2.2.2

Action A.2.1.1 bypasses all SENSOR CHANNELS, except the NMS, in the affected *division ~~containing the inoperable SENSOR CHANNEL~~. This causes the* trip *logic ~~for all Functions~~ in all ~~the affected division~~* LOGIC CHANNELS, except NMS*, to become 2/3 so a single failure will not result in loss of protection or cause a spurious initiation. However, the degree of redundancy is reduced. As indicated by ~~a~~* the *note ~~in the LCD~~, this action is not applicable to the NMS Functions. This action may be implemented for single SENSOR CHANNEL failures in multiple Functions only when all failures are in the same division.*

Action A.2.1.2 is similar to Action A.2.1.1 but applies only to the NMS Functions as indicated by ~~a~~ the *note ~~in the LCD~~. The ~~NMS~~ trip logic in all NMS divisions then becomes 2/3* for all NMS SENSOR CHANNEL functions, *and remains as 2/4* for all remaining SENSOR CHANNEL

functions ~~*in the SSLC*~~*. In this condition a single failure will not result in loss of protection or cause a spurious initiation.*

B.1, B.2.1, B.2.2, and B.3

Action B.2.1 requires placing the division containing the second failed SENSOR CHANNEL in division of sensors bypass for those Functions given in the ~~*LCO*~~ *note.*

The self-~~*test*~~diagnostic *features of the SSLC, NMS, and* ~~*EMS*~~ ECF *provide a high degree of confidence that no undetected failures will occur in the allowable Completion Time.*

STD DEP 16.3-92

P.1, P.2, R.1, and R.2

If the Function is not restored to OPERABLE status or placed in trip within the allowed Completion Time, or if the affected penetration flow path(s) are not isolated within the allowed Completion Time, ~~*specified number of OPERABLE channels/divisions are not restored to OPERABLE status within the allowed Completion Time*~~ *the plant must be placed in a MODE or other specified condition where the LCO does not apply.*

STD DEP 16.3-105

Q.1, Q.2.1, and Q.2.2

If the Function is not restored to OPERABLE status or placed in trip within the allowed Completion Time, the plant must be placed in a MODE or other specified condition in which the LCO does not apply. This is done by isolating the associated penetration flow paths, or by placing the plant in MODE 4. An analysis of the effects of flow-induced vibration on the remaining open MSIVs and other critical components in the reactor and steam systems must be performed prior to continued operation with an isolated main steamline. Continued plant operation must remain within the bounds of this analysis.

SURVEILLANCE REQUIREMENTS

As noted at the beginning of the SRs, the SRs for each SSLC Sensor instrumentation Function are located in the SRs column of Table 3.3.1.1 1.

SR 3.3.1.1.1

Performance of the SENSOR CHANNEL CHECK provides confidence that a gross failure of a device in a SENSOR CHANNEL has not occurred. A SENSOR CHANNEL CHECK is a comparison of the parameter indicated in one SENSOR CHANNEL to a similar parameter in a different SENSOR CHANNEL. It is based on the assumption that SENSOR CHANNELs monitoring the same parameter should read approximately the same value. Significant deviations between the channels could be an indication of excessive instrument drift in one of the channels or other channel faults. A SENSOR CHANNEL CHECK will detect gross channel failure; thus, it is key to verifying the instrumentation continues to operate properly between each DIVISION FUNCTIONAL TEST.

Agreement criteria are determined by the plant staff based on a combination of the channel instrument and parameter indication uncertainties.

The high reliability of each channel provides confidence that a channel failure will be rare. In addition, the continuous self-tests provide confidence that failures will be automatically detected. However, a frequent surveillance interval of 12 hours is used to provide confidence that gross failures which do not activate an annunciator or alarm will be detected within 12 hours. The SENSOR CHANNEL CHECK supplements less formal, but more frequent, checks of channels during normal operational use of the displays associated with the channels required by the LCO.

SURVEILLANCE REQUIREMENTS (continued)

SR 3.3.1.1.2

To ensure that the APRMs are accurately indicating the true core average power, the APRMs are calibrated to the reactor power calculated from a heat balance. The Frequency of once per ~~[7]~~ days is based on minor changes in LPRM sensitivity, which could affect the APRM reading between LPRM calibrations (SR 3.3.1.1.7).

A Note is provided that imposes the SR only when power is ≥ 25% RTP because it is difficult to accurately determine core THERMAL POWER from a heat balance when THERMAL POWER is < 25% RTP. At low power levels, a high degree of accuracy is unnecessary because of the large inherent margin to thermal limits (MCPR and APLHGR). At ≥ 25% RTP, the Surveillance is required to have been satisfactorily performed within the last ~~[7]~~ days in accordance with SR 3.0.2.

STD DEP 16.3-99

SR 3.3.1.1.3

A DIVISION FUNCTIONAL TEST is performed on the SRNM and APRM-High/Setdown channels in each division to provide confidence that the function will perform as intended.

~~*If the as found trip point is not within its required Allowable Value, the plant-specific setpoint methodology may be revised, as appropriate, if the history and all other pertinent information indicate a need for the revision. The as-left setpoint shall be consistent with the assumptions of the current plant-specific setpoint methodology.*~~

As noted, this SR is not required to be performed prior to entering MODE 2 from MODE 1 since testing of the MODE 2 required SRNM and APRM Functions cannot be performed in MODE 1. This allows entry into MODE 2 if the surveillance Frequency is not met per SR 3.0.2. In this event, the SR must be performed within 12 hours after entering MODE 2 from MODE 1. Twelve hours is based on the specified high reliability of these Functions and providing a reasonable time in which to complete the SR.

The devices that are used to implement the SRNM-High and APRM-High/Setdown Functions are specified to be highly reliable and low drift. The self-test features provide confidence that most failures will be automatically detected. However, a relatively short surveillance interval of

~~[7]~~ days is used because of the limited diversity of Functions available for the plant conditions where these Functions are used.

STD DEP 16.3-98 *SR 3.3.1.1.4*

A DIVISION FUNCTIONAL TEST is performed on the SRNM ~~and APRM~~ Functions that are required in MODE~~S 1 and~~ 5 to provide confidence that the Functions will perform as intended.

The ~~[31]~~ day frequency is based on the specified high reliability and low drift of the devices that are used to implement the ~~SRNM High and APRM High~~ Functions. In addition, the self-test features of the NMS provide confidence

SURVEILLANCE REQUIREMENTS (continued)

that most failures that occur between surveillances will be automatically detected. The diversity of Functions provided (including manual scram), coupled with the SENSOR CHANNEL CHECKS provide confidence that this frequency is adequate.

STD DEP 16.3-99 *SR 3.3.1.1.5 and SR 3.3.1.1.6*

A DIVISIONAL FUNCTIONAL TEST or CHANNEL FUNCTIONAL TEST is performed on the required Functions or channels in each division to provide confidence that the Functions will perform as intended. The test is performed by replacing the process signal with a test signal as far upstream in the instrument channel as possible within the constraints of the instrumentation design and the need to perform the surveillance without disrupting plant operations. The testing may be performed so that multiple uses of a parameter may be tested at one time.

~~*If the as found trip point is not within its required Allowable Value, the plant specific setpoint methodology may be revised, as appropriate, if the history and all other pertinent information indicate a need for the revision. The setpoint shall be left set consistent with the assumptions of the current plant specific setpoint methodology.*~~

The ~~[92~~ 31~~]~~ day frequency is based on the specified high reliability and low drift of the devices that are used to implement the Functions. In addition, the self-test features of the SSLC provides confidence that most failures that occur between surveillances will be automatically detected. The diversity of Functions provided for plant protection (including manual actuation), coupled with the SENSOR CHANNEL CHECKS provide confidence that this frequency is adequate.

The OPERABILITY of the SENSOR CHANNELs is determined by injecting a test signal in a single channel as near to the source as possible to assure that the ~~DTM~~ ~~DTUs~~DTFs in all divisions create an initiation signal when needed and that the signal is received by the ~~TLU~~TLF or ~~SLU~~ DLC.

SR 3.3.1.1.7

LPRM gain settings are determined from the local flux profiles measured by the Automatic Traversing Incore Probe (ATIP) System. This establishes the relative local flux profile for appropriate representative input to the

APRM System. The 1000 MW·d/t Frequency is based on operating experience with LPRM sensitivity changes.

SR 3.3.1.1.8

This surveillance assures that no gaps in neutron flux indication exist between the SRNM and APRM measurements.

The overlap between SRNMs and APRMs is of concern when reducing power into the SRNM range. On power increases, the system design will prevent further increases (initiate a rod block) if adequate overlap is not maintained.

SURVEILLANCE REQUIREMENTS (continued)

This SR is imposed only for the conditions given in the notes in the LCO. After the overlap requirement has been met and indication has transitioned to the SRNMs, establishing the overlap may not be possible (APRMs may be reading downscale once in MODE 2). If overlap is not demonstrated within a division, the Functions in that division that are required per the current MODE and other conditions shall be declared inoperable.

The basic Surveillance Frequency is whenever a transition to low power occurs. A maximum frequency of ~~[7]~~ days is also provided so the SR may be skipped if less than ~~[7]~~ days has elapsed since the last transition to power less than 5% RTP. The maximum Frequency of ~~[7]~~ days is reasonable based on reliability of the SRNMs and APRMs.

STD DEP 16.3-99

SR 3.3.1.1.10 and SR 3.3.1.1.11

CHANNEL CALIBRATION includes calibration of the ~~Analog Trip Modules~~ I/O units *used to implement the ATWS mitigation feature initiation.*

~~*If the as found trip point (fixed or variable) is not within its Allowable Value, the plant specific setpoint methodology may be revised, as appropriate, if the history and all other pertinent information indicate a need for the revision. Calibration shall be provided that is consistent with the assumptions of the current plant specific setpoint methodology.*~~

STD DEP 16.3-93

As noted in ~~SR 3.2.1.1.10~~ SR 3.3.1.1.10*, neutron detectors are excluded from SENSOR CHANNEL CALIBRATION because of the difficulty of simulating a meaningful signal.*

SR 3.3.1.1.14

ISOLATIONSYSTEM RESPONSE TIME acceptance criteria are included in Reference ~~10~~9

REFERENCES

1. ~~*DCD Tier 2, Table 6.2-7.*~~Not Used.

Table B 3.3.1.1-1 (Page 1 of 3)
SSLC Instrumentation Summary

PARAMETER	*~~EMS~~*ECF *Y/N*	*USAGE*

Table B 3.3.1.1-1 (Page 2 of 3)
SSLC Instrumentation Summary

PARAMETER	*~~EMS~~*ECF *Y/N*	*USAGE*
11.Drywell Pressure-High	*Y*	*RPS, LPFL, RCIC, CAM, SGTS, DG, HPCF, ADS, CIV, RCW/RSW, CUW Iso,* Trip of Condensate Pumps (b)
12.CRD Water Header Charging Pressure - Low	~~Y~~N	*RPS*
15.~~*Main Steam Tunnel Radiation-High*~~Feedwater Line Differential Pressure - High	~~N~~Y	~~*RPS*~~Trip of Condensate Pumps (b) ~~*MSIV*~~
16.Suppression Pool Temperature - High	~~Y~~N	*RPS, SPC*
19. Main Steam Line Pressure - Low	~~Y~~N	*MSIV*
20. Main Steam Line Flow - High	~~Y~~N	*MSIV*
21. Condenser Vacuum - Low	~~Y~~N	*MSIV*
22. Main Steam Tunnel Temperature - High	~~Y~~N	*ISO of CUW, MSIV*
23. Main Turbine Area Temperature - High	~~Y~~N	*MSIV*
26.RCIC Steam Supply Line Pressure - Low	*Y*	*ISO of RCIC*

Table B 3.3.1.1-1 (Page 3 of 3)
SSLC Instrumentation Summary

PARAMETER	*~~EMS~~*ECF *Y/N*	*USAGE*

(b) Concurrent drywell pressure – high (Function 11) and feedwater line differential pressure – high (Function 15).

STD DEP T1 3.4-1

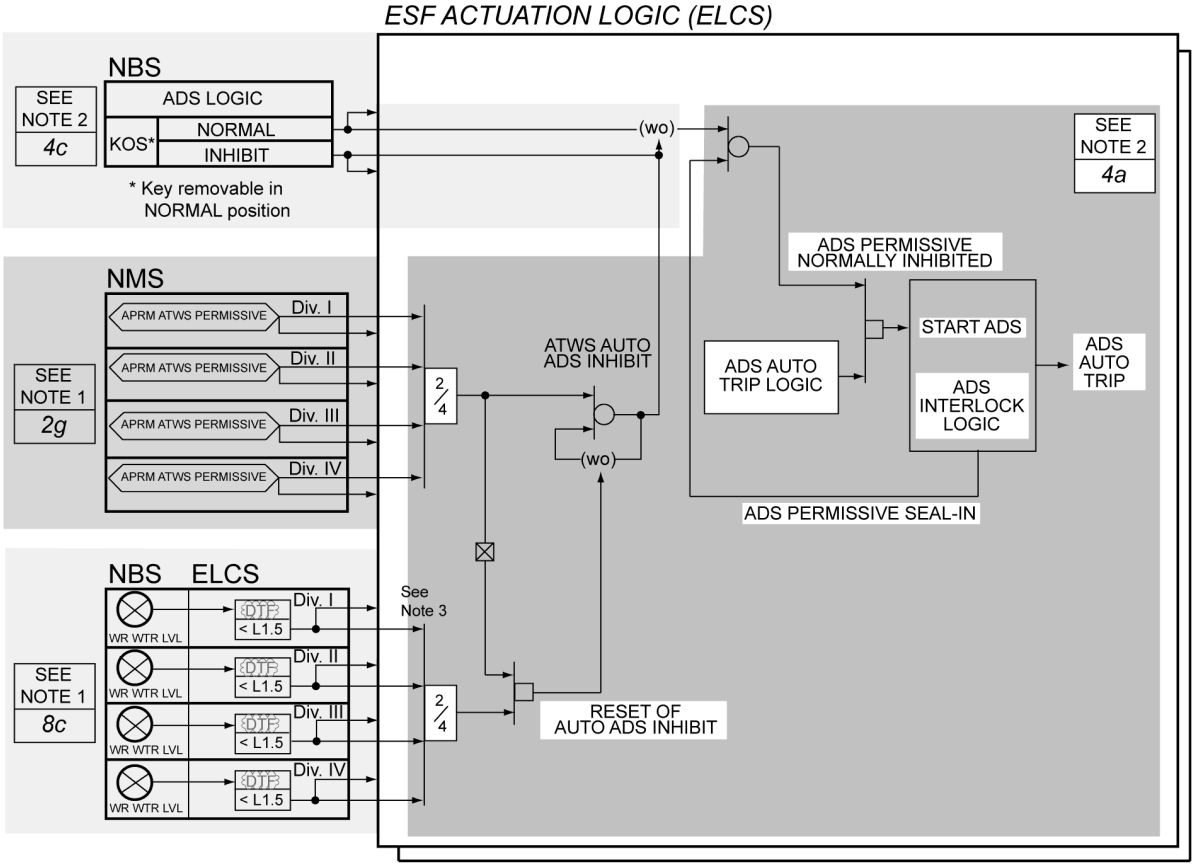

NOTES:
1. FUNCTION NUMBER AS LISTED IN TABLE 3.3.1.1-1 SSLC SENSOR INSTRUMENTATION
2. FUNCTION NUMBER AS LISTED IN TABLE 3.3.1.4-1 ESF ACTUATION INSTRUMENTATION
3. ELCS DIVISION-OF-SENSORS BYPASS APPLIES TO THIS VOTER

Figure B 3.3.1.1-1 ADS Inhibit Instrumentation Channels

STD DEP T1 3.4-1

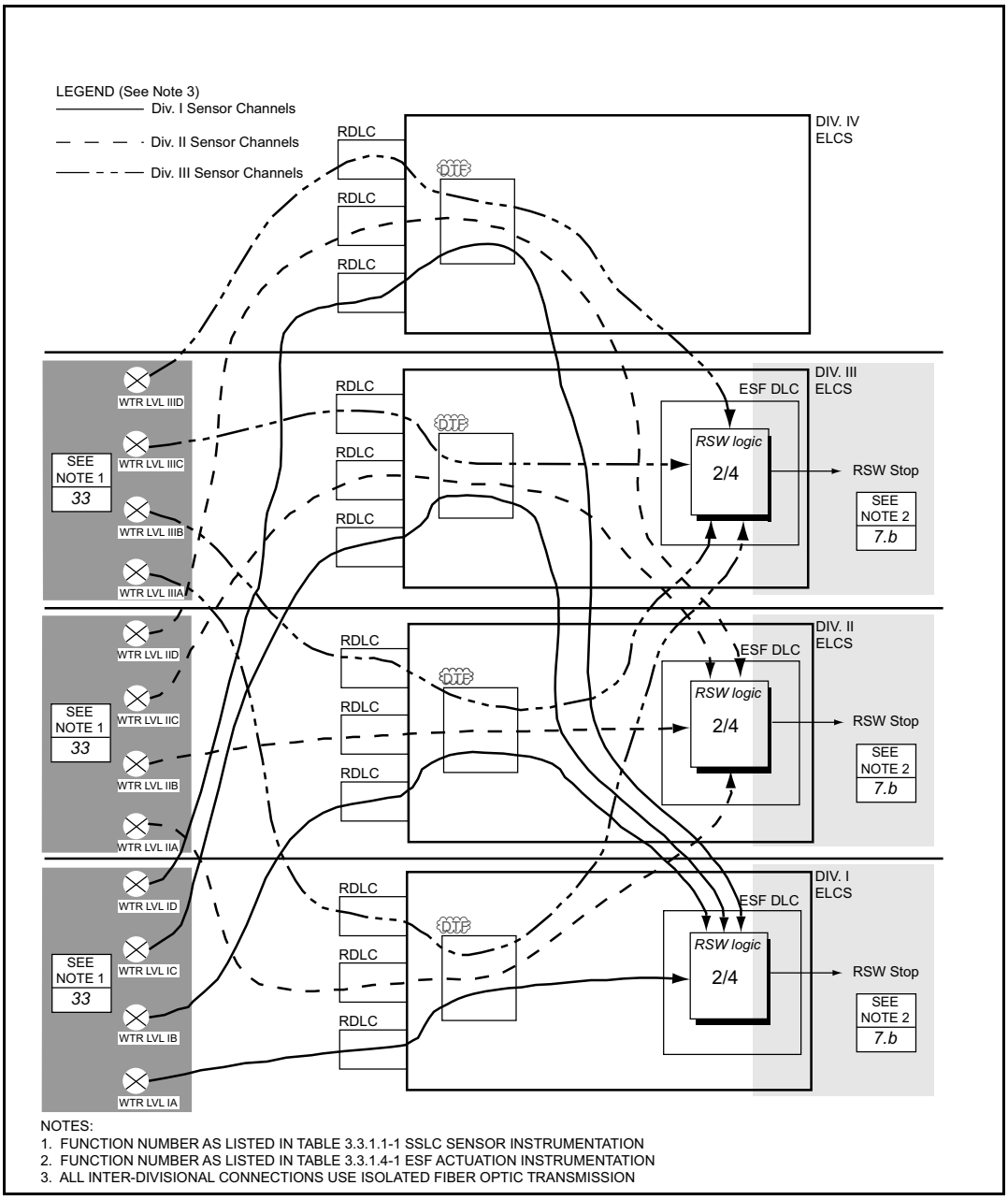

Figure B 3.3.1.1-2 RCW/RSW HX Room Leak Detection Instrumentation Channels

B 3.3 INSTRUMENTATION

B 3.3.1.2 Reactor Protection System (RPS) and Main Steam Isolation Valve (MSIV) Actuation

BASES

The information in this section of the reference ABWR DCD, including all subsections, is incorporated by reference with the following departures and site specific supplements. The site specific supplements partially address COL License Information Item 16.1.

STD DEP T1 3.4-1
STD DEP 16.3-57
STD DEP 16.3-81
STD DEP 16.3-82

BACKGROUND

The final initiation signals for isolating the main steamlines and de-energizing the scram solenoids are transmitted to the Output Logic Units (OLUs) by the ~~TLUs~~ TLFs in the SSLC. There are OLUs in all four divisions and load drivers in the two actuation divisions. The RPS and MSIV use 2/4 logic in both the LOGIC CHANNELS and OUTPUT CHANNELs.

One RPS and one MSIV actuation output from the ~~TLU~~ TLF *may be bypassed. Implementing this bypass causes the LOGIC CHANNEL and OUTPUT CHANNEL logic to change to 2/3. Interlocks are provided to prevent placing more than one RPS or MSIV actuation output in bypass.*

STD DEP 16.3-81

APPLICABLE SAFETY ANALYSIS, LCO and APPLICABILITY

1. RPS Actuation

The RPS Actuation LOGIC CHANNELS and OUTPUT CHANNELS *must be OPERABLE in MODE 1, MODE 2, and in MODE 5 with any control rod withdrawn from a core cell containing at least one fuel assembly.* The NMS (SRNM and APRM) LOGIC CHANNELS must be OPERABLE when the associated Functions in LCO 3.3.1.1 are required to be OPERABLE.

2. MSIV and MSL Drain Valves Actuation

The MSIV and MSL Drain Valves Actuation Function uses a ~~TLU~~ TLF *in all four divisions. The ~~TLU~~* TLF *acquires trip information from the ~~DTMs~~~~DTUs~~*DTFs *and sends actuation signals to the OLUs.*

5. Manual MSIV Actuation

There are four MSIV manual actuation pushbuttons. The data is routed directly to the OLUs for the MSIVs so this Function bypasses the ~~EMS, DTMs and TLUs~~ DTFs and TLFs*.*

ACTIONS
STD DEP 16.3-82

B.1, B.2, and B.3

Condition B occurs if two LOGIC CHANNELs for the same Function *or MSIV manual channels become inoperable in a fashion that does not result in an Actuation. In this Condition, the actuation logic could become 2/2. Therefore, it is appropriate to place one division in trip (Action B.1) and the other in ~~TLU~~* TLF *output bypass (Action B.2). The trip logic then becomes 1/2 so a single failure in the remaining operable divisions would not cause loss of protection. However, a single failure in one of the operable divisions could result in a spurious trip.*

F.1 and F.2

Condition F occurs if two OUTPUT CHANNELs for the same Function *become inoperable in a fashion that does not result in an Actuation.*

STD DEP 16.3-57

I.1 and I.2

If one of the manual scram divisions becomes inoperable then manual scram is unavailable. Placing the affected division in trip (Action I.1) causes the manual scram logic to become 1/1. ~~Note that the automatic actuation logic becomes 1/3in this condition so there is an increased vulnerability to spurious trips.~~

STD DEP 16.3-82

J.1

This Condition assures that appropriate actions are taken for one or more inoperable RPS Actuation Functions while in MODES 1 or 2.

K.1

This Condition assures that appropriate actions are taken for ~~multiple~~ one or more *inoperable RPS Actuation Functions while in MODE 5 with any control rod withdrawn from a core cell containing at least one fuel assembly.*

STD DEP 16.3-82
STD DEP 16.3-105

L.1, L.2.1 and L.2.2

This Condition assures that appropriate actions are taken for ~~multiple~~ one or more *inoperable MSIV Actuation Functions. If the specified Actions for Conditions A, B, C, D, E, F, or G are not implemented within the specified Completion Times the plant must be placed in a condition where the LCO does not apply. This is accomplished by isolating the affected penetration flow paths or placing the plant in MODE 4 where the LCO does not apply.* An analysis of the effects of flow-induced vibration on the remaining open MSIVs and other critical components in the reactor and steam systems

ACTIONS (Continued)

must be performed prior to continued operation with an isolated main steamline. Continued plant operation must remain within the bounds of this analysis.

The Completion Times of 12 hours for isolating the penetration flow paths (Action L.1) provides sufficient time to identify the effected flow paths and perform the action. The Completion Times for achieving MODE 4 (Actions L.2.1 and L.2.2) are reasonable, based on operating experience, to reach MODE 4 in an orderly manner and without challenging plant systems.

SURVEILLANCE REQUIREMENTS

The CHANNEL FUNCTIONAL TESTS required in LCO 3.3.1.1, "SSLC Sensor Instrumentation" ensures that the required SENSOR CHANNELS will perform as intended and generate a trip condition when required. This LCO addresses the operability of the LOGIC CHANNELS and OUTPUT

CHANNELS for RPS and MSIV, which covers the ~~TLUs~~ TLFs*, the output logic units (OLUs), the load drivers, and the manual actuation Functions.*

SR 3.3.1.2.1

A CHANNEL FUNCTIONAL TEST is performed on each manual RPS scram division to ensure that the entire manual trip channel will operate as intended.

This function uses a minimum of components, and the components have been proven highly reliable through operating experience. However, a relatively short surveillance interval of ~~[~~7~~]~~ days is used since availability of manual scram is important for providing a diverse means of reactor scram and the logic is 2/2. The probability of an event requiring manual scram coupled with a failure of one of the scram channels within this time period is very low.

SR 3.3.1.2.2

A DIVISIONAL FUNCTIONAL TEST is performed on the LOGIC CHANNELS in each division to provide confidence that the functions will perform as intended. The test is performed by replacing the normal signal with a test signal as far upstream in the channel as possible within the constraints of the instrumentation design and the need to perform the surveillance without disrupting plant operations. See Section 1.1, "definitions" for additional information on the scope of the test.

The devices used to implement the RPS and MSIV actuation functions are specified to be of high reliability and have a high degree of redundancy. Therefore, the ~~[92~~ 31*~~]~~ day frequency provides confidence that device Actuation will occur when needed. This test overlaps or is performed in conjunction with the DIVISIONAL FUNCTIONAL TESTS performed under LCO 3.3.1.1, "SSLC Sensor Instrumentation" to provide testing up to the OUTPUT CHANNELS.*

SURVEILLANCE REQUIREMENTS (Continued)

SR 3.3.1.2.3

A CHANNEL FUNCTIONAL TEST is performed on each manual MSIV channel to ensure that the channel will operate as intended.

The devices used to implement the manual MSIV actuation are of high reliability and have a high degree of redundancy. Therefore, the [~~92~~ 31] day frequency provide confidence that device Actuation will occur when needed. The probability of an event requiring manual MSIV actuation coupled with undetected failures in three channels within this time period is very low.

B 3.3 INSTRUMENTATION

B 3.3.1.3 Standby Liquid Control (SLC) and Feedwater Runback (FWRB) Actuation

BASES

The information in this section of the reference ABWR DCD, including all subsections, is incorporated by reference with the following departure and site specific supplements. The site specific supplements partially address COL License Information Item 16.1.

STD DEP 16.3-83

APPLICABLE SAFETY ANALYSIS, LCO AND APPLICABILITY

3. Manual ATWS-ARI/SLCS Initiation

The Manual ATWS-ARI/SLCS Initiation pushbutton channels introduce signals into the SLC and FWRB logic to provide manual initiation capability that is redundant to the automatic initiation. There are two pushbuttons and both must be ~~activated~~ actuated *to initiate* the *SLC*S *and FWRB* functions*. ~~Each switch has four contacts for SLC and FWRB initiation. Signals from both manual switches are sent to the logic in all four divisions. Each contact is a separate channel so there are two manual initiation channels per division.~~* Each pushbutton represents a single manual initiation channel (A, B), and sends redundant initiation signals to each of the channels of the RFCS Fault Tolerant Digital Controller (FTDC). The RFCS FTDC sends redundant manual initiation status signals to each of four ATWS Logic Processors (Divisions I, II, III, and IV). Each Logic Processor performs 2-out-of-3 voting of the manual initiation status signals received from the RFCS FTDC. *The ~~contacts~~* logic *used for manual ARI ~~are~~* is *covered in 3.3.4.1, "ATWS & EOC-RPT Instrumentation."*

SURVEILLANCE REQUIREMENTS

As noted, the SRs to be applied to each required Function are given in Table 3.3.1.3-1.

SR 3.3.1.3.1

A DIVISION FUNCTIONAL TEST is performed on each required LOGIC CHANNEL and manual channel to ensure that the Functions will perform as intended. The test is performed by replacing the normal signal with a test signal as far upstream in the channel as possible within the constraints of the instrumentation design and the need to perform the surveillance without disrupting plant operations. See Section 1.1, "Definitions" for additional information on the scope of the test.

The devices used to implement the SLC and FWRB actuation functions are specified to be highly reliable and have a high degree of redundancy. Therefore, the ~~[92~~ 31*~~]~~ day frequency provides confidence that device Actuation will occur when needed. This test overlaps or is performed in conjunction with the DIVISIONAL FUNCTIONAL TESTS*

SURVEILLANCE REQUIREMENTS (CONTINUED)

performed under LCO 3.3.1.1, "SSLC Sensor Instrumentation" to provide testing up to the OUTPUT CHANNEL.

The devices used to implement the SLC and FWRB actuation functions are specified to be of high reliability and have a high degree of redundancy. Therefore, the [~~92~~ 31] day frequency provides confidence that device Actuation will occur when needed. This test overlaps or is performed in conjunction with the DIVISIONAL FUNCTIONAL TESTS performed under LCO 3.3.1.1, "SSLC Sensor Instrumentation" to provide testing up to the OUTPUT CHANNEL.

STD DEP T1 3.4-1

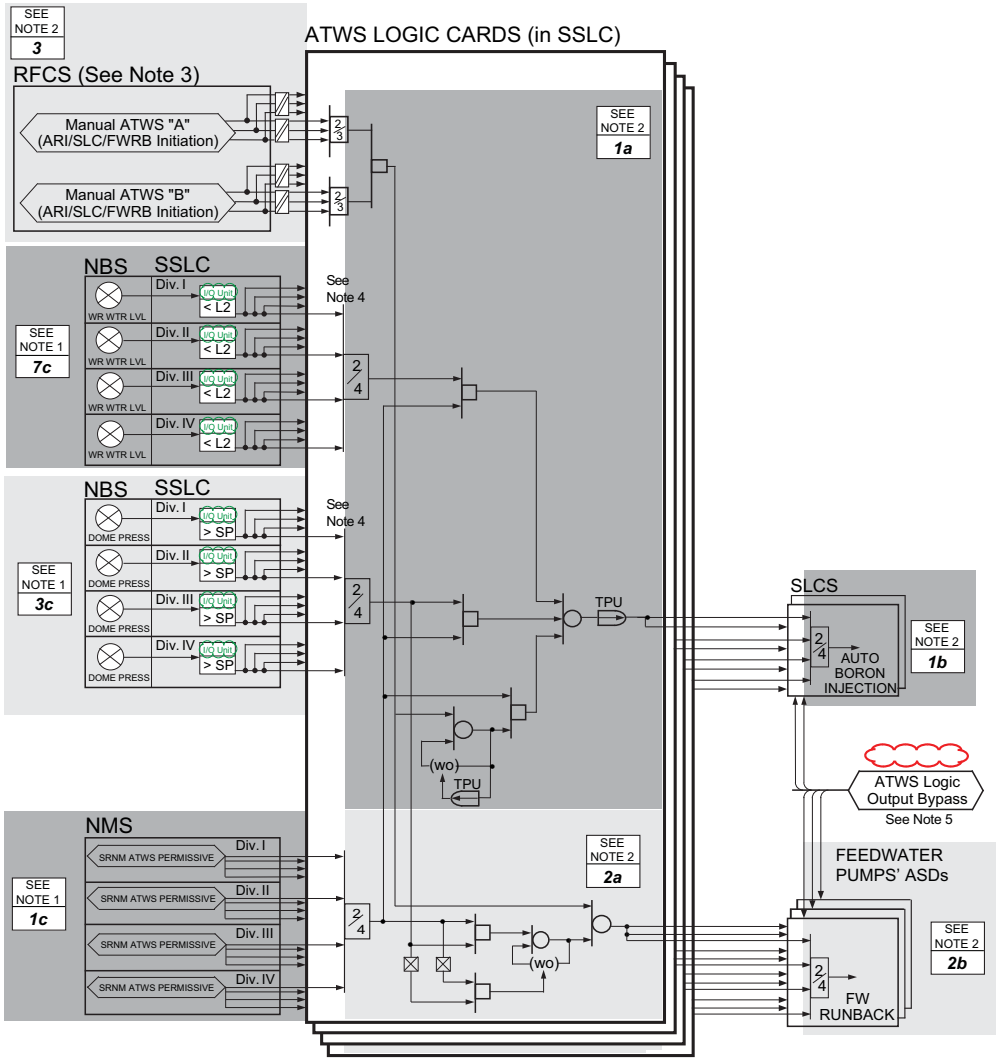

NOTES:
1. FUNCTION NUMBER AS LISTED IN TABLE 3.3.1.1-1 SSLC SENSOR INSTRUMENTATION
2. FUNCTION NUMBER AS LISTED IN TABLE 3.3.1.3-1 SLC and FWRB ACTUATION
3. FOR MANUAL ATWS-ARI FUNCTION, SEE FIGURE B 3.3.4.1-1 ATWS AND EOC-RPT INSTRUMENTATION CHANNELS
4. SSLC DIVISION-OF-SENSORS BYPASS APPLIES TO THIS VOTER
5. SAME ARRANGEMENT AS TLS OUTPUT LOGIC BYPASS BUT PERFORMED INDEPENDENTLY

Figure B 3.3.1.3-1 SLC and FWRB INSTRUMENTATION CHANNELS

[This page intentionally left blank]

B 3.3 INSTRUMENTATION

B 3.3.1.4 Engineered Safety Features (ESF) Actuation Instrumentation

BASES

The information in this section of the reference ABWR DCD, including all subsections, is incorporated by reference with the following departures and site specific supplement. The site specific supplement partially addresses COL License Information Item 16.1.

STD DEP T1 2.4-2
STD DEP T1 2.4-3
STD DEP T1 3.4-1 (All)
STD DEP 7.3-17
STD DEP 8.3-1
STD DEP 16.3-87
STD DEP 16.3-99
Standard Supplement - NRC Bulletin 2012-01

BACKGROUND

STD DEP 7.3-17

The final initiation signals for the non-MSIV valves are transmitted from the ~~SSLC~~ ESF *~~SLUs~~* DLCs *to remote actuation devices (OUTPUT CHANNELS). The non-MSIV isolation valve logic is contained in ~~SLU pairs in four~~ divisions* I, II, and III *as described in LCO B 3.3.1.1, "SSLC Sensor Instrumentation".*

A description of the operation of the ESF SENSOR CHANNELS and LOGIC CHANNELS is given in LCO 3.3.1.1, "SSLC Sensor Instrumentation". For ECCS Functions, *~~Each of a redundant pair of ESF SLU~~* two channels *send~~s~~ initiation data to an OUTPUT CHANNEL via the ~~EMS~~* ECF. For ADS, the *~~The~~ OUTPUT CHANNEL must receive initiation data from both ~~SLU~~*DLC*s before system actuation will occur.* For LPCF, HPCF, and RCIC, there are two redundant DLCs within a single ESF division. One OUTPUT CHANNEL initiation data actuates the associated valve(s) and the other OUTPUT CHANNEL initiation data actuates the associated pump(s). Both the associated pump(s) and valve(s) must be initiated for activation of the function. *The 2/2 output actuation logic for ADS is provided to reduce the potential for inadvertent ESF actuation and the resulting stress on plant equipment and attendant plant risk. ~~There is an OUTPUT CHANNEL for each required device (pump, valve, etc.).~~*

Except for ECCS functions, most other ESF functions are implemented using a single channel within a single DLC per division. Some ESF isolation functions are provided with redundant DLCs with a bypassable final voter (e.g., RCW Inside Drywell Isolation) to reduce the risk of plant operational impact of DLC failure.

~~One of the redundant SLU inputs to an OUTPUT CHANNEL except for the ADS OUTPUT CHANNELS - may be bypassed either manually or automatically be the SSLC self test. When one SLU input to an~~

~~*OUTPUT CHANNEL is bypassed the actuation logic becomes one-of-one.*~~

Manual initiation capability is provided for the systems and devices addressed by this LCO. There are three manual switches for containment isolation, one each in division I, II, and III. For isolation functions implemented with redundant channels, each ~~*Each of these*~~ *switch~~es~~ has ~~two contacts with~~ one contact routed to ~~one~~* both *of the associated redundant ~~SLU~~* channel*s pairs ~~and the other contact routed to the other SLU~~. Together, these switches cause closure of all isolation valves, except for RCIC and MSIVs. ~~Any two of the switches will isolate all isolatable paths, except for RCIC.~~ RCIC manual isolation is provided by two independent switches in divisions I and II. The RCIC manual isolation switch logic is as described for containment isolation.*

*Manual ECCS injection initiation for RCIC, LPFL A, B, & C, HPCF B, and ESF support features are implemented as described for containment isolation. HPCF C manual initiation uses hardwired signals that bypass the ~~EMS~~*ECF *and the SSLC LOGIC CHANNELS. ADS manual initiation uses two switches in each ADS division. Each switch has one contact that is routed to one member of the ~~SLU~~* DLC *pair associated with ADS. Both switches in one division must be pressed to open the ADS valves. The ADS manual inhibit for ATWS mitigation has one switch in each ADS division. Each switch has two contacts which are connected to the ~~SLU~~* DLC *pair associated with ADS in the division.*

*Most of the SENSOR CHANNELS required to initiate protective action are covered in LCO 3.3.1.1, "SSLC Sensor Instrumentation". This LCO covers the Manual initiation channels, LOGIC CHANNELS, OUTPUT CHANNELS, and those SENSOR CHANNELS not addressed in LCO 3.3.1.1. The SENSOR CHANNELS, except those from the NMS, that are routed directly to the ~~SLU~~*DLC*s are covered by this LCO since the ~~SLU~~*DLC*s are part of the LOGIC CHANNEL.*

STD DEP T1 3.4-1 *CHANNEL DEFINITIONS*

*The channel structure for the channel types covered by this LCO are depicted in Figures B 3.3.1.4-1 through B 3.3.1.4-~~4~~*5*. The channel structure in these Figures is similar with the basic structure as shown in Figure B 3.3.1.4-1. The channel characteristics shown in the* Figures ~~*Figure B 3.3.1.4-1*~~ *are:*

Figure B 3.3.1.4-1 (Containment Isolation, ESF Support Systems);

- A single channel, including manual and automatic features, initiates the Function.

Figures B 3.3.1.4-2 (ECCS except ADS and HPCF C), B 3.3.1.4-3 (HPCF C);

- *Each of the redundant* DLCs ~~*SLU pairs*~~ *is considered to be a separate LOGIC CHANNEL* although they originate within the same division.

- Figure B 3.3.1.4-3 shows the hardwired manual channel for HPCF C diverse logic which applies only to division III.

- *~~The separate contacts from a~~ A single switch operator ~~are shown as~~* provides the manual initiation signal *to ~~separate~~* both *manual initiation channels*, except HPCF C*.*

Figures B 3.3.1.4-4 (ADS):

- *The OUTPUT CHANNEL consists of two load drivers in series ~~with the LOGIC CHANNEL bypass included in the OUTPUT CHANNEL~~.*

- *The ADS has two manual initiation switch*es*, one ATWS Manual ADS Inhibit, and no LOGIC CHANNEL bypass capability.*

- A single SENSOR CHANNEL provides sensor data to both of the associated DLCs.

Figure B 3.3.1.4-5 (RCW/RSW Isolation):

- The OUTPUT CHANNEL includes two load drivers in series.

- *A single SENSOR CHANNEL provides sensor data to both of the associated ~~SLUs~~* DLCs*.*

- The RCW/RSW Isolation has one manual initiation switch.

~~*The differences in the other Figures are:*~~

- ~~*- Figure B 3.3.1.4-2 uses the SLU 3/4 pair and applies only to divisions I and II.*~~

- ~~*- Figure B 3.3.1.4-3 shows the hardwired manual channel for HPCF C which applies only to division III.*~~

- ~~*- Figure B 3.3.1.4-4 shows the ADS which has manual initiation switches, one ATWS Manual ADS Inhibit, and no LOGIC CHANNEL bypass capability.*~~

APPLICABLE SAFETY ANALYSIS, LCO, and APPLICABILITY

1.a, 1.b, 2.a, 2.b, 3.a, 3.b. ECCS Pump Discharge Flow – Low and Pressure – High

One flow and one pressure transmitter per pump are used to detect the associated subsystem discharge pressure to verify operation of the pump. Note that these pressure transmitters are not the same as the ones used in the ADS permissive described in B 3.3.1.1, "SSLC Sensor Instrumentation". Data values representing pressure and flow are received by the ESF ~~SLUs~~ DLCs *associated with the pump initiation division ~~via the EMS in the same division~~. The data values are compared to the respective setpoints in the ESF ~~SLU~~* DLC *~~pair DTM equivalent Function~~ to determine if the associated minimum flow valve is to be closed or opened.~~The LPFL minimum flow valves are time delayed so the valves will not open unless high pressure concurrent with low flow persists for a specified time.~~*

APPLICABLE SAFETY ANALYSIS, LCO, and APPLICABILITY (continued)

~~The time delay is provided to limit reactor vessel inventory loss during startup of the RHR shutdown cooling mode.~~

2.c. HPCF Pump Suction Pressure – Low

The suction pressure data originates in a pressure transmitter and is sent ~~via the EMS~~ to the ESF ~~SLU pair~~ DLCs *in the division that controls the HPCF pump being monitored. The ~~SLU~~* DLC *logic is arranged so that Low suction pressure must exist for a specified amount of time before pump start will be inhibited to prevent spurious inhibits due to suction pressure transients. The HPCF low suction pressure signal ~~is automatically~~* must be manually *reset ~~(i.e. no manual reset needed to remove the pump start inhibit when suction pressure recovers)~~. The HPCF Suction Pressure – Low Function is assumed to be OPERABLE and will not cause a spurious pump start inhibit during the transients and accidents analyzed in References 1, 2, and 3.*

1.c, 2.d, 3.c, 4.a. ECCS Systems Initiation.

These Functions are the LOGIC CHANNELS that send initiation data to the OUTPUT CHANNELS for the ECCS systems. The LOGIC CHANNELS for a specific ECCS subsystem are in the same division as the subsystem. Two LOGIC CHANNELS ~~(dual redundant SLUs)~~ must be OPERABLE when the associated ECCS feature is required to be OPERABLE. The applicability basis for the ECCS systems are given in LCO 3.5.1, "ECCS – Operating", and LCO 3.5.2, "ECCS – Shutdown". A LOGIC CHANNEL is OPERABLE when it is capable of generating device actuation data and transmitting it to the OUTPUT CHANNELS.

1.e, 2.f, 3.e. ECCS System Injection Manual Initiation – Except HPCF C.

The Manual Initiation push button channels introduce signals into the appropriate ECCS logic to provide manual initiation capability that is redundant to the automatic initiation SENSOR CHANNELS. ~~There is one push button with two contacts for each of the ECCS pumps.~~ Manual initiation data is acquired by ~~the SLU pair~~ each LOGIC CHANNEL *~~(one contact to each SLU in the pair LOGIC CHANNEL)~~ that controls the ECCS pumping subsystem, except for HPCF C* diverse logic*. HPCF C* diverse logic *Manual Initiation is hardwired to provide a diverse means of ECCS initiation.* For each function, both LOGIC CHANNELS must be OPERABLE for the associated Manual Initiation Function to be OPERABLE.

The Manual Initiation Function is not assumed in any accident or transient analyses for the ABWR. However, the Function is retained for overall redundancy and diversity of the ECCS features as required by the NRC in the plant licensing basis.

There is no Allowable Value for this Function since it is mechanically actuated based solely on the position of the manual initiation switches. Two channels of the Manual Initiation Function for each ECCS pump, except HPCF C diverse logic*, are required to be OPERABLE when the associated ECCS is required to be OPERABLE. Refer to LCO 3.5.1, "ECCS –*

APPLICABLE SAFETY ANALYSIS, LCO, and APPLICABILITY (continued)

Operating" and LCO 3.5.2, "ECCS – Shutdown" for Applicability Bases for the ECCS subsystems.

2.g. HPCF C Diverse Logic Manual Initiation

The HPCF C Diverse Logic *Manual Initiation channel completely bypasses the SSLC channels (see figure B 3.3.1.4-3) and provides direct control of the actuated devices. One manual pushbutton causes HPCF C to align for injection and initiates the pump start sequence.*

The HPCF C Diverse Logic *Manual Initiation Function is not assumed in any accident or transient analyses for the ABWR. However, the Function is retained for overall redundancy and diversity of the ECCS features as required by the NRC in the plant licensing basis.*

There is no Allowable Value for this Function since it is mechanically actuated based solely on the position of the manual switch. One channel of the HPCF C Diverse Logic *Manual Initiation Function is required to be OPERABLE when HPCF C is required to be OPERABLE. Refer to LCO 3.5.1, "ECCS – Operating" and LCO 3.5.2, "ECCS-Shutdown" for Applicability Bases for the ECCS subsystems.*

4.b. ADS Device Actuation

Each ADS valve has two OUTPUT CHANNELS and an associated solenoid valve (i.e., each ADS valve has two solenoid valves with the "A" solenoid valve actuated from the ADS division I OUTPUT CHANNEL and the "B" solenoid valve actuated from the ADS division II OUTPUT CHANNEL)*. Energizing either of the OUTPUT CHANNELS will cause the valve to open. Each* ~~*output*~~ OUTPUT CHANNEL *receives an appropriate signal from the associated LOGIC CHANNEL when a protective action is required. Two OUTPUT CHANNELS must be OPERABLE when ADS is required to be OPERABLE. The channels are OPERABLE when they are capable of going to the state needed to perform the protective action and recovering to the normal state.*

The ADS OUTPUT CHANNEL is inoperable when either of the two load drivers connected to a solenoid is inoperable.

4.c. ADS Manual Initiation

The Manual Initiation push button channels introduce signals into the ADS logic to provide manual initiation capability that is redundant to the automatic SENSOR CHANNELS. There are two push buttons for each ADS division trip system (total of four pushbuttons). Each member of the ~~*SLU*~~ DLC *pair used to implement ADS acquires data from one of the switches (see Figure B 3.3.1.4-4). The manual actuation data is acquired by the* ~~*SLU*~~ DLC*s that control the ADS subsystems. Both switches associated with one of the ADS divisions must be activated to initiate ADS in that division.*

APPLICABLE SAFETY ANALYSIS, LCO, and APPLICABILITY (continued)

4.d and e. ADS Division I/Division II ECCS Pump Discharge Pressure – High (permissive)

Pump discharge pressure data originates in two pressure transmitters on the discharge side of each of the three low pressure and two high pressure ECCS pumps. The data from one transmitter on each pump is sent to the ESF ~~SLUs~~ DLCs *associated with ADS 1 and the data from the second transmitter is sent to the ESF ~~SLUs~~* DLCs *associated with ADS 2. The ~~SLU~~* DLC *logic will declare an ADS permissive if any one of the 5 pressure values are above their respective setpoints.*

4.f. ATWS Manual ADS Inhibit

The ATWS Manual ADS Inhibit push button channels introduce signals into the ADS logic to provide manual ADS inhibit capability that is redundant to the automatic SENSOR CHANNELS. There is one push button for each ADS division trip system. ~~Each pushbutton has two contacts. Each member of the SLU pair~~ Both DLCs *used to implement ADS* within a division *acquire data from ~~one of the contacts on~~ the switch in its division (see Figure B 3.3.1.4-4).*

STD DEP 8.3-1

5.a, 5.b, 7.d, 7.e. Divisions I, II, & III Loss of Voltage – ~~6.9~~ 4.16 *kV and Degraded Voltage – ~~6.9~~* 4.16 *kV.*

The ~~6.9~~ 4.16 *kV busses are monitored to detect a loss of the offsite power or degraded bus conditions. If the bus voltage is less then required to support ESF features, the associated emergency Diesel-Generator (DG), provided as a back up to the offsite power source, is started. These SENSOR CHANNELS are provided to assure that there is sufficient power available to supply safety systems should they be needed. This Function is assumed in the loss of offsite power analysis of reference 3. The RCW/RSW system is also started on these Functions since it provides cooling for the diesels.*

The signals for this Function originate in undervoltage relays connected to each phase of the ~~6.9~~ 4.16 *kV bus. The phases are connected so that the loss of a single phase will cause two of the undervoltage relays to trip. The three undervoltage relays are combined in 2/3 logic so that a loss of any phase will cause starting of the associated DG while a failure in one of the relays will not cause a spurious start. A time delay is provided to prevent starting the DG due to transient conditions on the bus.*

The undervoltage relay trip signals are transmitted to the ~~SLU pair~~ DLCs *in the associated division via the ~~EMS~~* ECF*.*

STD DEP 8.3-1

5.c Diesel Generator Initiation.

The Diesel Generators (DG) are used to supply emergency back up power to the ESF systems. The division II and III DGs receive a start signal when HPCF is initiated and all three divisions receive a start signal when the LPFL's are initiated. Each DG also receives a start signal from the divisional ~~6.9~~ 4.16 *KV bus monitors.*

APPLICABLE SAFETY ANALYSIS, LCO, and APPLICABILITY (continued)

The DGs LOGIC CHANNELS are required to be OPERABLE in MODES 1, 2, 3, and in MODE 4 and 5 when the associated DG's are required to be OPERABLE.

5.e Diesel Generator Manual Initiation.

The Manual Initiation push button channels introduce signals into the appropriate ESF feature logic to provide manual initiation capability that is redundant to the automatic initiation SENSOR CHANNELS. There is one push button for each of the ESF features with manual initiation capability. The manual initiation data is acquired by the ~~SLU pair~~ DLC *that controls the ESF feature.*

Standard Supplement - NRC Bulletin 2012-01

5.f Divisions I, II, & III Negative Sequence Voltage - 4.16kV

Each of the three 4.16 kV ESF busses is monitored to detect a high negative sequence voltage, indicative of a loss of an electrical phase. If negative sequence voltage of a sufficiently high level is detected, the bus supply breakers are tripped allowing the associated Emergency Diesel Generator (DG), provided as a backup to the offsite power source, to start via the bus undervoltage relaying. These SENSOR CHANNELS are provided to assure that there is sufficient power available to supply safety systems should they be needed.

The Negative Sequence Voltage Function is not assumed in any accident or transient analyses for the ABWR. However, the Function is added to the plant licensing basis in response to NRC Bulletin 2012-01.

The input signals for this Function are provided by the bus instrument potential transformers connected to each phase of the three 4.16 kV ESF busses. The required channel on a 4.16 kV ESF bus has three separate negative sequence voltage relays that monitor the voltage on all three bus phases, and each negative sequence relay will detect a negative sequence voltage on the three phases. The three separate negative sequence relay outputs are combined in a 2/3 logic to ensure actuation of the Function, even in the event of a single relay failure, while also preventing a spurious trip should a single relay fail. A time delay is provided to prevent breaker trips due to normal transient conditions on the bus.

The required channel of this Function, consisting of three relays, is required to be OPERABLE on each 4.16 kV ESF bus in order to trip the respective ESF bus offsite feeder breaker and allow other protective functions to actuate. The Function must be operable in MODES 1, 2, and 3 and in MODES 4 and 5 when any ECCS system is required to be OPERABLE as described in LCO 3.8.2, "AC Sources - Shutdown" and LCO 3.8.11, "AC Sources - Shutdown (Low Water Level)".

The Allowable Value is selected to be low enough to trip the respective ESF bus feeder breaker prior to potential equipment damage, but high enough to prevent normal voltage fluctuations from causing spurious initiations. A time delay assures that normal bus transients do not cause spurious trips of the 4.16kV ESF bus supply breaker.

STD DEP 8.3-1

7.a. Reactor Building Cooling Water/Reactor Service Water Initiation.

This Function is included to provide confidence that the HVAC needed to support ESF systems is within the design basis. The initiation occurs on high drywell pressure, low Level 1, or ~~6.9~~ 4.16 KV emergency bus monitors. This Function is not explicitly assumed in any accident or transient analysis for the ABWR. These signals, or suppression pool high temperature, also initiate shedding of non-essential loads.

7.c RCW/RSW Manual Initiation

The Manual Initiation push button channels introduce signals into the appropriate ESF feature logic to provide manual initiation capability that is redundant to the automatic initiation SENSOR CHANNELS. There is one push button for each of the RCW/RSW manual initiation channels. The manual initiation data is acquired by the DLC that controls the ESF feature.

The ESF Manual Initiation Functions are not assumed in any accident or transient analyses for the ABWR. However, the Function is retained for overall redundancy and diversity of the ESF as required by the NRC in the plant licensing basis.

There is no Allowable Value for this Function since it is mechanically actuated based solely on the position of the manual initiation switches. Each channel of the Manual Initiation Function is required to be OPERABLE when the associated ESF feature is required to be OPERABLE.

9.c Suppression Pool Cooling Manual Initiation

The Manual Initiation push button channels introduce signals into the appropriate ESF feature logic to provide manual initiation capability that is redundant to the automatic initiation SENSOR CHANNELS. There is one push button for each of the suppression pool cooling manual initiation channels. The manual initiation data is acquired by the DLC that controls the ESF feature.

The ESF Manual Initiation Functions are not assumed in any accident or transient analyses for the ABWR. However, the Function is retained for

APPLICABLE SAFETY ANALYSIS, LCO, and APPLICABILITY (continued)

overall redundancy and diversity of the ESF as required by the NRC in the plant licensing basis.

There is no Allowable Value for this Function since it is mechanically actuated based solely on the position of the manual initiation switches. Each channel of the Manual Initiation Function is required to be OPERABLE when the associated ESF feature is required to be OPERABLE.

10.a, 10.e, 10.g, 13.a, and 14.a Isolation Initiation.

These Functions are the LOGIC CHANNELS that send initiation data to the OUTPUT CHANNELS for the various isolation valves. ~~There are two~~

~~LOGIC CHANNELS in each division that contains isolation initiation.~~The channels provide actuation signals for each of the isolation valves in the same division. The sensor Functions for each of the isolation valves are as described in LCO 3.3.1.1, "SSLC Sensor Instrumentation".

~~Two~~ For Functions 10.a, 10.g, 13.a, and 14.a, one *LOGIC CHANNEL~~S (dual redundant SLUs)~~ must be OPERABLE in each division with isolation capability when the associated isolation Function is required to be OPERABLE. See LCO 3.3.1.1, "SSLC Sensor Instrumentation" for the basis and the divisions associated with each isolation function. A LOGIC CHANNEL is OPERABLE when it is capable of generating initiation data and transmitting it to the associated OUTPUT CHANNELs.*

Function 10.e is implemented using two DLCs with a final bypassable voter. The two DLCs, the voters, and the bypasses are treated as a separate channel. The channel is OPERABLE if both of the DLCs and the voters are OPERABLE, or if one of the two DLCs are OPERABLE with the second DLC bypassed so that the OPERABLE channel can initiate isolation action.

10.c & 10.d. Drywell Sump Drain Line LCW/HCW Radiation - High

The detectors are connected to the PRRM system which sends a trip signal to the division I ~~SLU pair~~ DLC.

11. Containment Isolation Manual Initiation

There is a push button in each division that provides containment isolation initiation. ~~Each divisional pushbutton has two contacts. Each contact is associated with only one of the redundant SLUs within a containment isolation division. Each of the contacts and its associated data transmission is considered to be one manual initiation channel.~~ Each divisional manual isolation pushbutton causes closure of all isolation valves in the division, except for RCIC. ~~There are two divisional manual pushbuttons associated with each isolated path with two active isolation valves. Either of the pushbuttons associated with a flow path causes the flow path to be isolated.~~

STD DEP T1 2.4-3

12.a RCIC Isolation Initiation.

These Functions are the LOGIC CHANNELS that send initiation data to the OUTPUT CHANNELS for the RCIC isolation valves. ~~There are two LOGIC CHANNELS in each division that contains RCIC isolation initiation.~~ The channels provide actuation signals for each of the isolation valves in the same division. The sensor Functions for the RCIC isolation valves, except for RCIC Turbine Exhaust ~~Diaphragm~~ Pressure - High, are as described in LCO 3.3.1.1, "SSLC Sensor Instrumentation".

APPLICABLE SAFETY ANALYSIS, LCO, and APPLICABILITY (continued)

~~Two~~One LOGIC CHANNEL~~S (dual redundant SLUs)~~ must be OPERABLE in each RCIC isolation division (divisions I and II) when the associated isolation Function is required to be OPERABLE.

12.c. RCIC Isolation Manual Initiation

~~Each pushbutton has two contacts. Each contact is associated with only one of the redundant SLUs within a RCIC isolation division. Each of the contacts and its associated data transmission is considered to be one manual initiation channel.~~ Each divisional manual isolation pushbutton causes closure of all the RCIC isolation valves in the division. Either of the pushbuttons causes isolation of all isolated flow paths within RCIC system.

There is no Allowable Value for this Function since the division is mechanically actuated based solely on the position of the push buttons. ~~Two~~ One *channel of the RCIC Manual Isolation Initiation Function ~~are~~* is *required to be OPERABLE in each RCIC isolation division when RCIC isolation is required to be OPERABLE.*

STD DEP T1 2.4-3

12.d. RCIC Turbine Exhaust ~~Diaphragm~~ Pressure - High

High turbine exhaust ~~diaphragm~~ pressure indicates that the pressure may be too high to continue operation of the RCIC turbine. ~~That is, one of two exhaust diaphragms has ruptured and pressure is reaching turbine casing pressure limits.~~ This isolation is for equipment protection and is not assumed in any transient or accident analysis for the ABWR. These instruments are included in the TS because of the potential for risk due to possible failure of the instruments preventing RCIC initiations.

~~The RCIC Turbine Exhaust Diaphragm Pressure - High data originates in four transmitters that are connected to the space between the rupture diaphragms on the turbine exhaust line. The division I and division II ESF SLU pairs each receive trip data from two of the turbine exhaust diaphragm pressure transmitters. Two-of-two isolation logic is used in each divisional SLU pair for this Function. Two channels of the RCIC Turbine Exhaust Diaphragm Pressure - High Functions are available in each of two divisions (Division I and division II) and are required to be OPERABLE to ensure that no single instrument failure can preclude the isolation function or cause a spurious isolation.~~

~~The Allowable Values are high enough to prevent damage to the turbines.~~

STD DEP T1 2.4-2

1.d, 2.e, 3.d, 5.d, 6.b, 7.b, 8.b, 9.b, 10.b, 10.f, 10.h, ~~11.b,~~ 12.b, 13.b, 14.b and 15.b. ESF and Isolation Device Actuation.

APPLICABLE SAFETY ANALYSIS, LCO, and APPLICABILITY (continued)

13.c. CUW Isolation on SLC Initiation

Isolation of the CUW System is required when the SLC System has been initiated to prevent dilution and removal of the boron solution by the CUW System (Reference 4). SLC System initiation signals originate from the two SLC pump start signals. The SLC pump A start signal is connected to a division I ~~SLU pair~~ DLC *and the SLC pump B signal to a division II ~~SLU pair~~* DLC*. The data is shared between division via suitable isolators. CUW isolation occurs when either pump is started.*

STD DEP T1 2.4-2 15.a. Feedwater Line Break Mitigation Initiation.

These Functions are the LOGIC CHANNELS that send initiation data to the OUTPUT CHANNELS for the Feedwater Line Break Mitigation Actuation (e.g., trip of the condensate pumps). The LOGIC CHANNEL for a specific condensate pump is in the same division as the condensate pump. One LOGIC CHANNEL must be OPERABLE when the associated condensate pump is required to be OPERABLE. The applicability basis for the Feedwater Line Break Mitigation are given in LCO 3.3.1.1, "SSLC Sensor Instrumentation." A LOGIC CHANNEL is OPERABLE when it is capable of generating device actuation data and transmitting it to the OUTPUT CHANNELS.

Feedwater line break mitigation initiation is required to be OPERABLE in MODES 1, 2 and 3 consistent with the Applicability of LCO 3.3.1.1, "SSLC Sensor Instrumentation."

STD DEP T1 2.4-2 ACTIONS

B.1~~, *B.2.1, and B.2.2*~~

This condition assures that appropriate actions are taken when one or more ~~*of a redundant pair of*~~ *ESF LOGIC CHANNELS or one* or more ESF OUTPUT CHANNELS ~~*of a redundant pair of manual initiation channels*~~ *is inoperable.*~~*Placing the associated OUTPUT CHANNEL in bypass causes the logic to change from 2 out of 2 to 1 out of 1 so initiation capability is maintained. However, the ESF feature is more vulnerable to spurious actuation.*~~

The 1 hour Completion Time for B.1 is allowed for restoring the inoperable channel. The probability of an event requiring the Function coupled with an undetected failure in the associated redundant channel with the Completion Time is low. Also, redundant ESF features may provide adequate plant protection given the availability of the associated features. ~~*provides sufficient time for the operator to determine which OUTPUT CHANNELS are associated with the inoperable channel. Plant operation in this condition for the specified time does not contribute significantly to plant risk.*~~

~~*Since plant protection is maintained and the potential for a spurious trip is low because of the high reliability of the logic, operation in this condition for an extended period is acceptable. Therefore, a Completion Time of 30 days is allowed for restoring the inoperable channel (Action B.2.1). The probability of an event requiring the Function coupled with an undetected failure in the associated redundant LOGIC CHANNEL in the Completion Time is quite low. Also, redundant ESF features may provide adequate plant protection given the unavailability of the associated features. The self-test capabilities of the SSLC provide a high degree of confidence that no undetected failures will occur within the allowable Completion Time.*~~

~~*Action B.2.2 provides an alternate to Action B.2.1. Verification of the OPERABILITY of any redundant feature(s) provides confidence that adequate plant protection capability is maintained. Action B.2.2 does not*~~

~~*apply to features with no redundant alternate. The Completion Time for Action B.2.2 is as given for Action B.2.1.*~~

~~*Implementing either of the Actions B.2.1 or B.2.2 provides confidence that plant protection is within the design basis so no further Action is required.*~~

~~*These Actions apply*~~ This Action applies *to all* ECCS *LOGIC CHANNELS* and OUTPUT CHANNELS*, except ADS.*~~*, and the isolation initiation manual channels. They do not apply to the ADS LOGIC CHANNELS because they cannot be bypassed at the OUTPUT CHANNEL.*~~ This Action also applies to all ESF LOGIC CHANNELS and OUTPUT CHANNELS.

STD DEP 8.3-1

Standard Supplement - NRC Bulletin 2012-01

C.1

This Condition is provided to assure that appropriate action is taken for single or multiple inoperable SENSOR CHANNELS ~~*channels*~~ *that cause automatic or manual actuation of an ESF feature to become unavailable. However, automatic and manual initiation for redundant features are not affected.*

Action C.1 restores the intended plant protection capability. The 1 hour Completion Time for Action C.1 provides some amount of time to restore automatic or manual actuation before additional Required Actions are imposed.

This Action applies to

- ~~*- all LOGIC CHANNELS, except ADS*~~
- ~~*- isolation initiation manual channels*~~
- *Divisions I, II, & III Loss of Voltage-* ~~*6.9*~~4.16 *kV* ~~*and*~~*, Degraded Voltage* ~~*6.9*~~4.16 *kV*, and Negative Sequence Voltage - 4.16 kV*.*

D.1 and D.2

This Condition is provided to assure that appropriate action is taken for inoperable OUTPUT CHANNELS or an inoperable HPCF C diverse logic manual initiation channel. An inoperable OUTPUT CHANNEL makes the associated device (pump, valve, etc.) unable to perform its protective action. ~~*A failure in the HPCF C diverse logic manual channel causes a loss of its system level manual initiation capability.*~~

Action D.1 applies to ~~*all*~~ *OUTPUT CHANNELS*~~*, except ADS. ADS is not included because of the nature of the redundancy used in the ADS systems*~~ and device actuation for DG actuation, SGTS actuation, RCW/RSW actuation, CAM actuation, CIV isolation, RCW Inside Drywell isolation, RCIC isolation, CUW isolation, and SD Cooling isolation. *Action D.2 applies to the isolation valves that can be closed without disrupting plant operation or jeopardizing plant safety*

E.1 and E.2

This Condition addresses SENSOR CHANNEL failures for isolation SENSOR CHANNEL Functions that have one or two channels. For these Functions a failure in the SENSOR CHANNEL causes loss of automatic initiation or the initiation logic becomes 1/1. However, manual initiation is still available.

Action E.1 requires restoration of the inoperable channel to OPERABLE status. Action E.2 provides an alternate ~~of closing the associated isolation valves which accomplishes the intended protective action~~ declaring the associated device(s) inoperable.

These Actions apply only to the Drywell Sump Drain Line LCW/HCW Radiation - High and CUW Isolation on SLC Initiation Functions since these are the isolation Functions with one ~~or two~~ SENSOR CHANNEL~~S~~.

F.1

This Condition is provided to assure that appropriate action is taken for ~~multiple~~ one or more *inoperable manual initiation channels ~~for Functions that have use 2/2 logic for manual initiation of the system or subsystem~~. The loss of* a manual initiation channel for *both* one channel and two *channel~~s~~* Functions *causes loss of the system manual initiation. However, automatic initiation is still available and the systems may still be manually operated using the individual device manual controls.*

This Action applies to all ECCS and ESF *manual initiation channels, except the ADS* and the HPCF C diverse logic*. ADS* manual initiation channels are addressed in Conditions H and I. HPCF C diverse logic manual initiation channel is addressed in Condition D.*~~ is not included because its manual initiation is different.~~*

G.1

If the specified actions for Conditions ~~A,~~ B, C, D, E *or ~~E~~ F are not met within the specified Completion Times the feature(s) associated with the inoperable channel must be declared inoperable. Declaring the associated feature inoperable will cause entry into the appropriate LCOs that address the feature so appropriate compensatory measures will be taken.*

STD DEP T1 3.4-1

H.1

This condition assures appropriate compensatory measures are taken for failures in ~~one of the two~~ an ADS OUTPUT CHANNEL~~S associated with one or more ADS valves~~ in one ADS division, an ADS LOGIC CHANNEL in one division, an ADS manual initiation channel in one division, an ATWS Manual ADS Inhibit channel in one division, or all of the ADS Division ~~I~~/~~II~~II ECCS Pump Discharge Pressure – High (permissive) Functions in one division. For these failures the ADS Function is still available, but the redundancy is reduced, (i.e. logic is 1/1 instead of 1/2). The high pressure ECCS pumps are still capable of providing core cooling and inventory make up. In addition, there are manual controls for the relief solenoid on the SRVs that are independent of the ~~SSLC~~ ELCS ADS logic and devices. The relief solenoids do not share any signal processing devices with ADS and are powered from three divisional 125 VDC sources. Therefore, there is a high degree of diversity to protect against a small break LOCA.

Action H.1 restores the channel(s) to OPERABLE status. When two or more high pressure ECCS systems are OPERABLE there is a high degree of redundancy and diversity so operation is permitted for 7 days. If only one high pressure system is OPERABLE the Completion Time is reduced to 3 days. These Completion Times are acceptable because of the specified high reliability of the devices used in the ~~SSLC~~ ELCS logic and SRV manual relief, the redundancy in ADS valves (i.e. 8 ADS valves, 5 needed for accident mitigation), and the low probability of an event requiring ADS, coupled with a failure that would defeat a redundant ADS Function and a failure in all high pressure ECCS sub-systems, occurring within that time period.

This Action applies to the ADS LOGIC CHANNELS, ADS OUTPUT CHANNELS, ADS manual initiation channels, ATWS manual ADS inhibit channels, and the ADS Division I/II ECCS Pump Discharge Pressure – High (permissive) channels.

I.1

This condition assures that appropriate compensatory measures are taken for conditions of:

- *two divisions with one or more inoperable ADS LOGIC CHANNELS*
- *inoperable RCIC isolation SENSOR CHANNELS*
- *two divisions with one or more inoperable ADS ~~valves with both~~ OUTPUT CHANNELS ~~inoperable~~*
- *two divisions with one or more inoperable ADS manual initiation channels.*
- *two divisions with one or more inoperable ATWS manual ADS Inhibit channels*

For ADS, the LOGIC CHANNELS and OUTPUT CHANNELS *cannot be tripped or bypassed so the associated valves must be declared inoperable for these conditions. ~~The RCIC isolation SENSOR CHANNELS are 2/2 in each division which results in loss of automatic initiation in one division for any single channel failure.~~This condition is also entered if the required Action and associated Completion Time of Condition H is not met ~~(except for ECCS pump discharge pressure permissive)~~.*

This Action applies to the ADS LOGIC CHANNELS, the ADS OUTPUT CHANNELS, the ADS manual channels, the ATWS manual ADS Inhibit channels, and the RCIC Turbine Exhaust ~~Diaphragm~~ Pressure - High Functions.

K.1

Action K.1 restores at least three of the required SENSOR CHANNELS for the Function to the OPERABLE status. The completion time of 7 days is based on the low probability of undetected failures in both of the OPERABLE channels for the Function occurring in that time period. The self-test features of the ~~SSLC~~ ELCS*, NMS, and ~~EMS~~* ECF *provide a high degree of confidence that no undetected failure will occur.*

L.1

Action L.1 restores at least two of the required SENSOR CHANNELS for the Function to the OPERABLE status. The completion time of 24 hours is based on the low probability of undetected failures in the remaining OPERABLE channel for the Function occurring in that time period. The self-test features of the ~~SSLC~~ ELCS*, NMS, and ~~EMS~~* ECF *provide a high degree of confidence that no undetected failures will occur.*

M.1

This Action is also invoked if the Completion Times of Actions ~~H,~~ J, K, or L are not met.

SURVEILLANCE REQUIREMENTS

SR 3.3.1.4.3

A DIVISIONAL FUNCTIONAL TEST is performed on the LOGIC CHANNELS and SENSOR CHANNELS in each ESF division to provide confidence that the Functions will perform as intended. The test is performed by replacing the normal signal with a test signal as far upstream in the channel as possible within the constraints of the instrumentation design and the need to perform the surveillance without disrupting plant operations. See Section 1.1, "Definitions" for additional information on the scope of the test.

The devices used to implement the Functions are specified to be of high reliability and have a high degree of redundancy. Therefore, the ~~[92~~ 31*~~]~~ day frequency provides confidence that device actuation will occur when needed. This test overlaps or is performed in conjunction with the DIVISIONAL FUNCTIONAL TESTS performed under LCO 3.3.1.1, "SSLC Sensor Instrumentation" to provide testing up to the final actuating device.*

SURVEILLANCE REQUIREMENTS (Continued)

SR 3.3.1.4.4

The tests in the COMPREHENSIVE FUNCTIONAL TEST (CoFT) verify proper ~~SSLC~~ ELCS *system function, computer component function, software and hardware interactions, response times, and error handling. Error statistics, usage statistics, historical statistics, and various other measures are used to verify proper performance of the ~~SSLC~~* ELCS*. Successful completion of these tests establishes OPERABILITY of SENSOR CHANNELS, LOGIC CHANNELS, and OUTPUT CHANNELS.*

The software based ~~SSLC~~ ELCS *system contains many states, not all of which will occur over the life of the plant. The most important states are those that are required to mitigate accidents. Therefore, the CoFT focuses on usage testing, which exercises the overall system by simulating the input conditions under which the system is designed to perform, rather than coverage testing, which attempts to exercise all possible states of the system. Before plant start-up there is a high level of confidence that the ~~SSLC~~* ELCS *system will operate as specified due to the extensive inspections, tests, and analyses conducted during the ITAAC preoperational phases. During the plant operating life, the CoFT assures that the protective action equipment is within its specified performance* characteristics.

STD DEP 16.3-99

SR 3.3.1.4.6

A SENSOR CHANNEL CALIBRATION is a complete check of the instrument loop and the sensor. This test verifies a SENSOR CHANNEL responds to the measured parameter within the necessary range and accuracy. SENSOR CHANNEL CALIBRATION leaves the channel adjusted to account for instrument drifts between successive calibrations. Measurement error historical determinations must be performed consistent with the plant specific setpoint methodology. The channel shall be left calibrated consistent with the assumptions of the setpoint methodology. As noted, the calibration includes calibration of all parameters used to establish derived setpoints and all parameters used to automatically bypass a trip function.

~~*If the as found trip point (fixed or variable) is not within its Allowable Value, the plant specific setpoint methodology may be revised, as appropriate, if the history and all other pertinent information indicate a need for the revision. Calibration shall be provided that is consistent with the assumptions of the current plant specific setpoint methodology.*~~

The 18 month frequency is based on the ABWR expected refueling interval and the need to perform this Surveillance under the conditions that apply during a plant outage. The Frequency is adequate based on the specified low drift of the devices used to implement the Functions covered by this LCO.

STD DEP T1 3.4-1

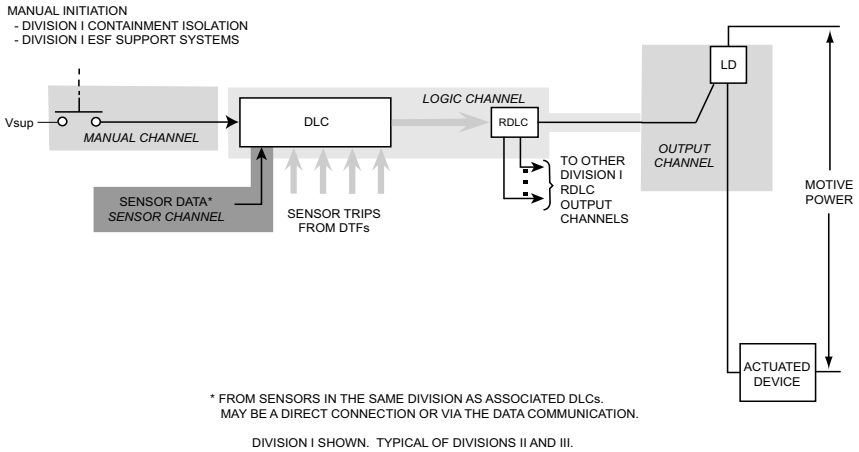

Figure B 3.3.1.4-1 ESF Actuation Channel Structure for Containment Isolation, ESF Support

STD DEP T1 3.4-1

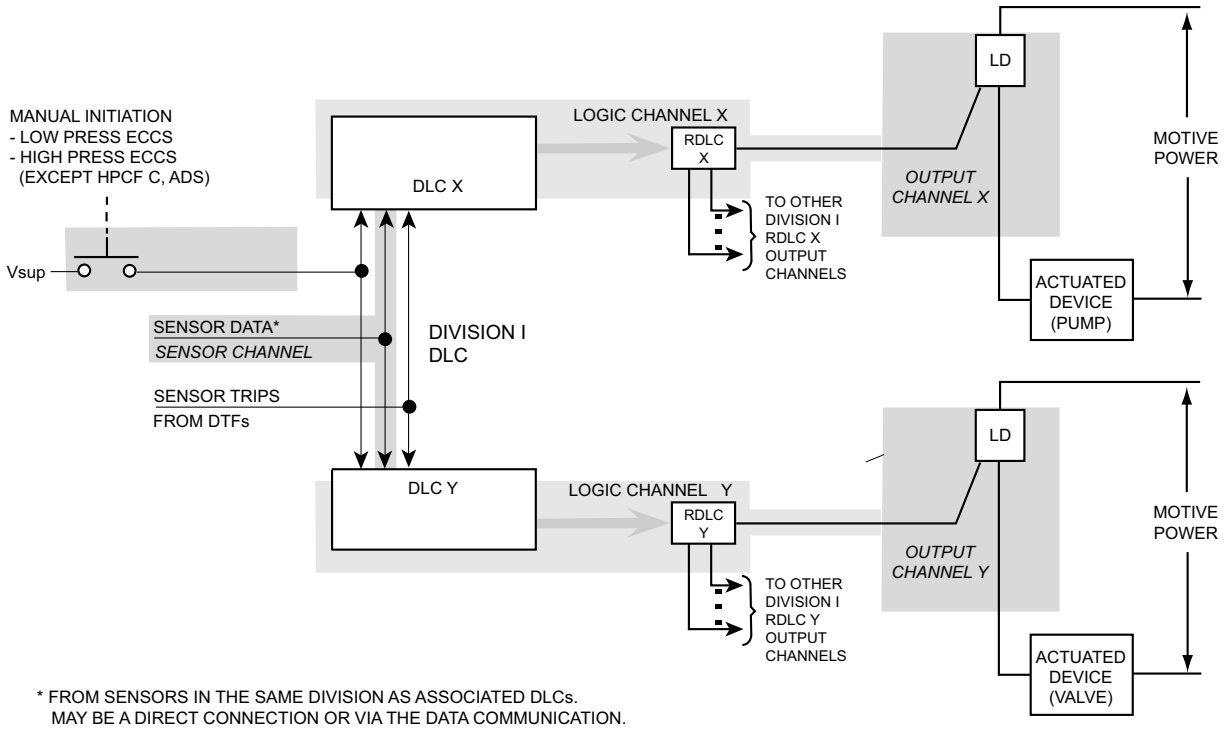

DIVISION I SHOWN. (TYPICAL OF DIVISION II AND III LPFL, HPCF B, AND RCIC).

Figure B 3.3.1.4-2 ESF Actuation Channel Structure for LPFL B, C, HPCF B, RCIC

STD DEP T1 3.4-1

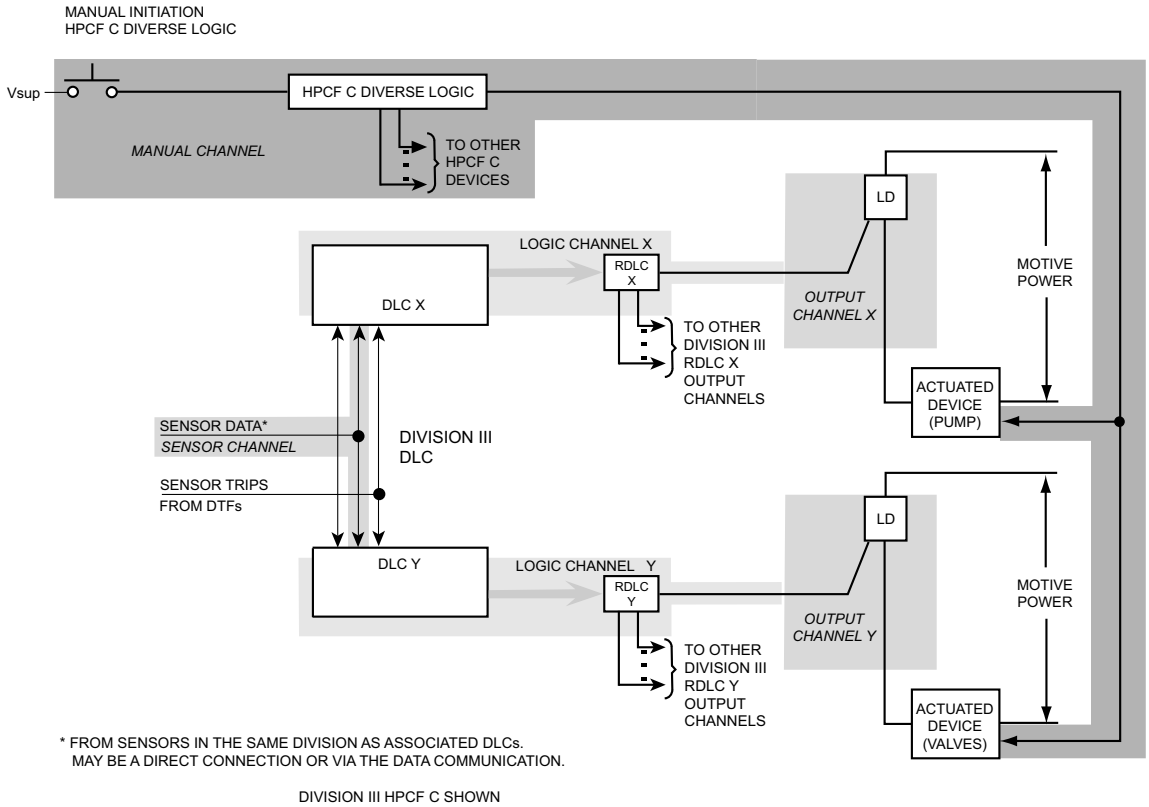

Figure B 3.3.1.4-3 ESF Actuation Channel Structure for HPCF C

STD DEP T1 3.4-1

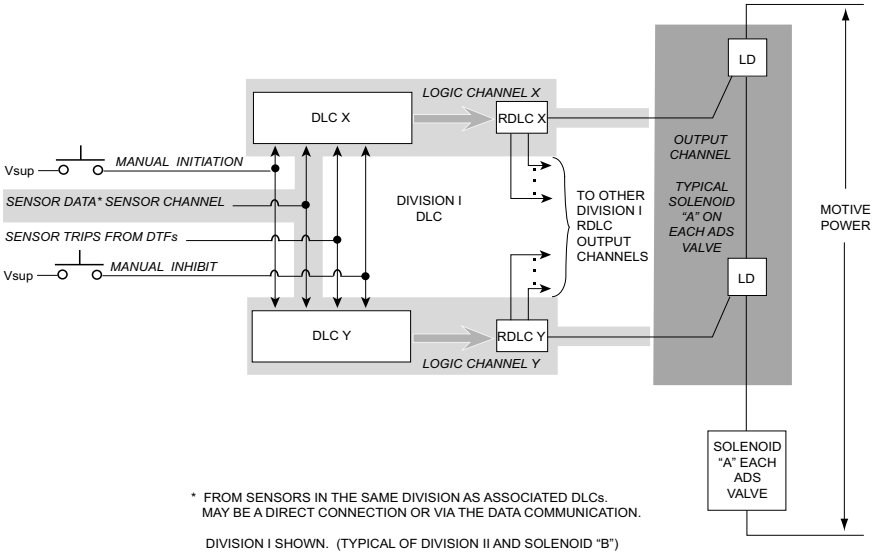

Figure B 3.3.1.4-4 ESF Actuation Channel Structure for ADS

STD DEP T1 3.4-1

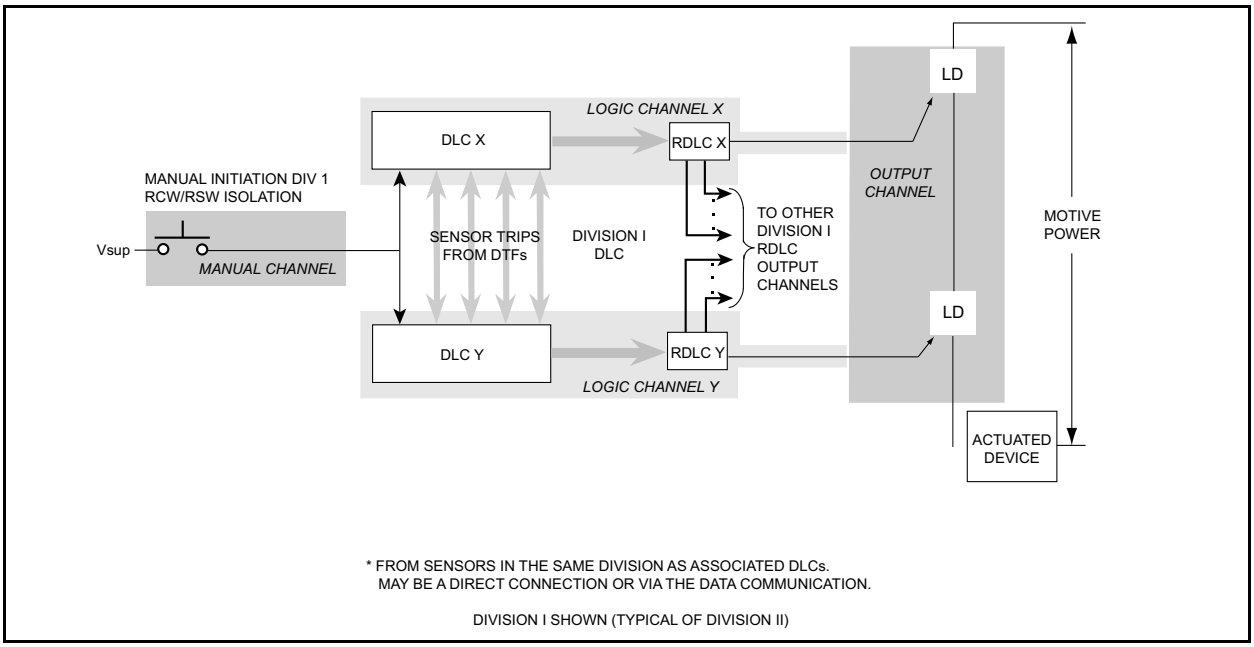

Figure B 3.3.1.4-5 ESF Actuation Channel Structure for RCW/RSW Isolation

[This page intentionally left blank]

B 3.3 INSTRUMENTATION

B 3.3.2.1 Startup Range Neutron Monitor (SRNM) Instrumentation

BASES

The information in this section of the reference ABWR DCD, including all subsections, is incorporated by reference with no departures, but the following site specific supplements. The site specific supplements partially address COL License Information Item 16.1.

ACTIONS

E.1

With two required SRNMs inoperable in MODE 5, the ability to detect local reactivity changes in the core during refueling is unavailable. Required Actions D.1, D.2, and D.3 are already applicable and continue to be applicable. Required Action E.2 modifies Required Action D.3 to require immediate initiation of action to restore one of the inoperable required SRNMs to OPERABLE status instead of requiring initiation of action within the former Completion Time of ~~[7]~~ days.

SURVEILLANCE REQUIREMENTS

The SRs for each SRNM Applicable MODE or other specified condition are found in the SRs column of Table 3.3.2.1-1.

SR 3.3.2.1.1

Performance of the CHANNEL CHECK ensures that a gross failure of instrumentation has not occurred between CHANNEL FUNCTIONAL TESTS. A CHANNEL CHECK is a comparison of the parameter indicated on one channel to the same parameter indicated on other similar channels. It is based on the assumption that instrument channels monitoring the same parameter should read approximately the same value. Significant deviations between the instrument channels could be an indication of excessive instrument drift or other faults in one of the channels.

Agreement criteria are determined by the plant staff, based on a combination of the channel instrument uncertainties, including indication and readability. If a channel is outside the match criteria, it may be an indication that the instrument has drifted outside its limit.

The specified high reliability of each SRNM channel provides confidence that a channel failure will be rare. However, a surveillance interval of ~~[12]~~ hours is used to provide confidence that gross failures that do not activate an annunciator or alarm will be detected within the specified Frequency. The CHANNEL CHECK supplements less formal, but more frequent, checks of channels during normal operational use of the displays associated with the channels required by the LCO.

SURVEILLANCE REQUIREMENTS (Continued)

SR 3.3.2.1.4 and SR 3.3.2.1.5

Performance of a CHANNEL FUNCTIONAL TEST demonstrates the associated channel will function properly.

SR 3.3.2.1.4 is required in MODE 5, and the [7] day Frequency ensures that the channels are OPERABLE while core reactivity changes could be in progress. This Frequency is reasonable, based on the reliability of the devices used in the SRNM and on other Surveillances (such as a CHANNEL CHECK) that ensure proper functioning between CHANNEL FUNCTIONAL TESTS.

SR 3.3.2.1.5 is required in MODE 2 with the APRMs downscale and in MODES 3 and 4. Since core reactivity changes do not normally take place in these modes, the Frequency has been extended from [7] days to [31] days. The [31] day Frequency is based on the reliability of the processing devices used and on other Surveillances (such as CHANNEL CHECK) that ensure proper functioning between CHANNEL FUNCTIONAL TESTS.

B 3.3 INSTRUMENTATION

B 3.3.3.1 Essential ~~*Multiplexing System*~~ Communication Function ~~*EMS*~~ (ECF)

BASES

The information in this section of the reference ABWR DCD, including all subsections, is incorporated by reference with the following departure and site specific supplement. The site specific supplement partially addresses COL License Information Item 16.1.

STD DEP T1 3.4-1

BACKGROUND

The ~~*EMS*~~ ECF *is a* set of ~~*data collection and*~~ *data distribution* ~~*system*~~functions *that provide*~~*s*~~ *plant parameter data* ~~*collection and*~~ *distribution for use by the* individual *safety systems in providing protective action. The* ~~*EMS*~~ ECF is implemented through the use of divisionally dedicated networks and/or data links provided with the safety related digital system platforms. ~~*consists of remote multiplexing units (RMU), Control Room Multiplexing units (CMU), and and a segmented dual redundant data transmission path. The transmissions paths are reconfigurable so that most data transmission failures effect only one segment in one of the redundant paths*~~.

The ~~*EMS*~~ ECFs ~~*is comprised of*~~ are separated in *four independent divisions (Div. I, II, III, IV).* ~~*Strategically located RMUs gather data from plant sensors, convert it to serial digital data, and*~~ The ECF acquires data from remote process sensors and discrete devices located within the plant, and *transmit*s *the data to the* safety related instrumentation and control platforms of the *Safety System Logic and Control (SSLC)* ~~*Digital Trip Modules (DTMs), Trip Logic Units (TLU) or Safety Logic Units (SLU) system*~~ *over* ~~*dual*~~ *redundant optical data transmission paths.* The *SSLC* platforms process that data according to required system logic protocols to calculate control signals. The ~~*RMUs also receive data representing the desired actions for controlled devices and delivers it to the appropriate OUTPUT CHANNEL. The OUTPUT CHANNEL converts the data to a signal level suitable for the controlled device.*~~ECF distributes the resulting control signals to the final actuators of the *supported systems'* driven equipment. The ECF is separated from the non-safety related Non-Essential Communication Function (NECF) through the use of isolating transmission medium and buffering devices.

The equipment implementing the ECF features ~~*an automatic self-test*~~self-diagnostics and ~~*automatically*~~ accommodates a single ECF failure (e.g., cable break or device failure) within a division without loss of the ECF. The ECF continues normal function after an error is detected with no interruption in data communication. Self-diagnostics run continuously and faults are indicated in the main control room. Loss of communications in an entire division does not cause transient or erroneous data to occur at system outputs, but may cause a loss of ability to control equipment in that division. ~~*includes a variety of self-test and monitoring features. The self-test checks the health of the*~~

~~*microprocessor, RAM, ROM, communications, data transmission segments, and software. A hard failure will activate an alarm and provide fault indication to the board level.*~~

~~*Soft failures (i.e., transient) are logged to provide maintenance information. Reconfiguration status after a segment failure also activates an alarm.*~~*The* ~~*dual*~~ *redundant data transmission paths* within an SSLC division *provide communication between* ~~*the RMUs and CMUs*~~ SSLC equipment and remote process sensors and discrete devices located within the plant ~~*SSLC*~~, and between SSLC equipment and the final actuators of the supported systems' driven equipment*. The paths are* ~~*reconfigurable*~~ redundant *so that communication is maintained as long as there is one OPERABLE path between* ~~*all pairs of multiplexers*~~ the equipment implementing the ECF*. One path between* ~~*any pair of units*~~ the equipment implementing the ECF *is called a "segment" in this LCO.*

A data transmission segment is OPERABLE when communication between ~~*any pair of multiplexers*~~ equipment implementing the ECF *can occur over the segment. This requires the* ~~*line drivers and line receivers on both ends*~~ equipment implementing the ECF *to be OPERABLE and the path between the* ~~*units*~~ equipment (e.g., segment) *to be OPERABLE. The* ~~*EMS*~~ ECF *must also be capable of providing the specified maximum throughput and the data error rates must be within specified limits for it to be considered OPERABLE.*

APPLICABLE SAFETY ANALYSIS, LCO and APPLICABILITY

Some portion of the ~~*EMS*~~ ECF *is required to be operable in all MODES since there are one or more safety systems that acquire data from the* ~~*EMS*~~ ECF *in all modes.* ~~*The applicable safety analysis for the various portions of the EMS ECF are the analysis that apply to the Functions that acquire data from the EMS ECF.*~~ *The signal acquisition and conversion* ~~*portions of the ECF*~~ functions *are adequately covered by the LCOs for the systems that acquire and/or transmit data over the* ~~*EMS*~~ ECF*. Therefore, this LCO addresses only the data transmission portion of the* ~~*EMS*~~ ECF*.*

The ~~*Essential Multiplexing System (EMS)*~~ ECF *does not directly generate any trip functions so there* ~~*are*~~ is *no specific Allowable Value for the* ~~*EMS*~~ ECF *since the effect of any* ~~*EMS*~~ ECF *processing is included in the allowable values for the Functions in systems that utilize the* ~~*EMS*~~ ECF*.*

ACTIONS

A Note has been provided to modify the ACTIONS related to ~~*EMS*~~ ECF*. Section 1.3, Completion Times, specifies that once a Condition has been entered, subsequent trains, subsystems, components, or variables expressed in the Condition, discovered to be inoperable or not within limits, will not result in separate entry into the Condition. Section 1.3 also specifies that Required Actions of the Condition continue to apply for each additional failure, with Completion Times based on initial entry into the Condition. However, the Required Actions for multiple inoperable* ~~*EMS*~~ ECF *data transmission paths provide appropriate compensatory measures. As such, a Note has been provided that allows separate Condition entry for each inoperable* ~~*EMS*~~ ECF *division.*

A.1

This Condition address the situation where there is some loss of data transmission redundancy in one ~~EMS~~ ECF division but a complete data transmission path is maintained so the systems serviced by the ~~EMS~~ ECF can acquire the needed data.

B.1

This Condition address the situation where there is some loss of data transmission redundancy in more than one ~~EMS~~ ECF division but complete data transmission paths are maintained in all divisions. The ~~EMS~~ ECF performs as intended and a single failure will not cause loss of data transmission capability in more than one division.

This LCO is included to assure that any degradation in data transmission redundancy in more than one ~~EMS~~ ECF division will be repaired on a reasonable schedule. The Completion Time is based on the specified high reliability of the individual data transmission segments and the limited number of devices involved in each segment. Also, the self ~~test~~ diagnostics will detect most additional data transmission path failures.

C.1

If the required action of condition B is not accomplished within the required Completion Time, then additional ~~EMS~~ ECF monitoring (Action C.1) is required to provide confidence that adequate data transmission capability is maintained. The Completion Times for C.1 are adequate to detect an inoperable ~~EMS~~ ECF division soon enough so that the impact of any additional failures on plant risk is negligible.

D.1

When one or more ~~EMS~~ ECF divisions become inoperable then the Functions and/or Features associated with the ~~EMS~~ ECF become unavailable. The loss of one or more ~~EMS~~ ECF data transmission divisions is similar to the loss of multiple SENSOR CHANNELS in LCO 3.3.1.1, "SSLC Sensor Instrumentation" or LOGIC CHANNELS in LCO 3.3.1.2, "RPS and MSIV Actuation", and 3.3.1.4, "ESF Actuation Instrumentation"..

A note is included to exclude this Action from the MODE change restriction of LCO 3.0.4. The ~~EMS~~ ECF must be OPERABLE in all MODES and other conditions while declaring the Features and Functions associated with the inoperable ~~EMS~~ ECF division may require entry into a different MODE or other condition.

SURVEILLANCE REQUIREMENTS

SR 3.3.3.1.1

The operability of the ~~EMS~~ ECF *data transmission segments should be periodically confirmed to assure that an adequate degree of redundancy is maintained. This SR is included to provide confidence that all data transmission segments are OPERABLE. The test consists of assuring that the two data transmission paths between~~ all connected pairs of multiplexers~~* the equipment implementing the ECF *are OPERABLE.~~ The test assures that the line drivers and line receivers on both ends of each of the redundant paths between the multiplexers equipment implementing the ECF are is OPERABLE. The test must also assure the ability to reconfigure the data transmission paths. Reconfiguration is accomplished by cross connecting the line drivers and line receivers to interconnecting the data transmission paths. The inability to reconfigure shall be treated as a loss of a single segment (i.e., Condition A).~~*

The ~~EMS~~ ECF *data transmission segments are constructed from a few highly reliable devices and the loss of segments while maintaining data transmission integrity does not degrade plant safety. Therefore, a frequency of [~~92~~ 31] days is adequate.~~ The EMS ECF site test will automatically detect most data transmission errors.~~*

SR 3.3.3.1.2

The 18 month frequency is based on the ABWR expected refueling interval and the need to perform this Surveillance under the conditions that apply during a plant outage to reduce the potential for an unplanned transient if the Surveillance were performed with the reactor at power. The specified high reliability of the devices used in the ~~EMS~~ ECF *combined with self tests intended to detect ~~EMS~~* ECF *degradation provide confidence that this frequency is adequate.*

B 3.3 INSTRUMENTATION

B 3.3.4.1 Anticipated Transient Without Scram (ATWS) and End of Cycle Recirculation Pump Trip (EOC-RPT) Instrumentation

BASES

The information in this section of the reference ABWR DCD, including all subsections and figures, is incorporated by reference with the following departures and site specific supplements. The site specific supplements partially address COL License Information Item 16.1.

STD DEP T1 3.4-1 (All)
STD DEP 16.3-55
STD DEP 16.3-99

BACKGROUND

The ATWS-ARI Functions are included in the Recirculation Flow Control (RFC) system, the Rod Control and Information System (RCIS), and in a separate ATWS-ARI confirmatory logic device included specifically for ATWS-ARI Functions. The RFC is a triple redundant microprocessor system, the RCIS is a dual redundant microprocessor-based system, and the confirmatory logic device uses hardware (i.e. not microprocessor based) logic. The data needed for the ATWS-ARI recirculation runback Functions is acquired from other systems using suitable isolation. These systems are completely independent of and diverse to the RPS. The data used is:

- *Four independent low Level 2 discrete trip data from the ECCS portion of the ~~SSLC~~* ELCS *to the RFC.*
- *Three independent discrete data representations of reactor pressure from the Steam Bypass and Pressure Control (SB&PC) system to the RFC.*
- *Four ~~independent~~* channels of *scram follow discrete trip data from the ~~ECCS portion of the SSLC~~* Actuators for Scram Air Header Dump Valves *to the RCIS and to the FMCRD Insertion confirmatory logic.*

The RPT Functions are included in the Recirculation Flow Control (RFC) system. The RFC system is a triple redundant microprocessor based system with the data needed by the RPT Functions acquired from other systems using suitable isolation. The data used by the function is:

- *Three independent low Level 3 discrete trip data from the Feedwater Control (FWC) System for the ATWS-RPT.*
- *Four independent low Level 2 discrete trip data from the ECCS portion of the ~~SSLC~~* ELCS *for the ATWS-RPT.*
- *Three independent data representations of high reactor pressure from the Steam Bypass and Pressure Control (SB&PC) system for the ATWS-RPT.*

BACKGROUND (continued)

- *Four independent composite discrete data values which are a trip state data value when either a Turbine Stop Valve-Closure or Turbine Control Valve Fast Closure, Trip Oil Pressure-Low scram initiation occurs. The data is received from the ~~RPS portion of the SSLC~~* RTIS *and is used for the EOC-RPT. The logic for these signals is described in the SSLC Sensor Instrumentation LCO (LCO 3.3.1.1).*

Independent RPT signals are generated in all three RFC subsystems using 2/4 or 2/3 logic, as appropriate. RPT data from all three RFC subsystems are transmitted to the RIP Adjustable Speed Drives (ASD). The ASDs use dual *2/3 logics to implement the trip and include an adjustable delay on the trip actuation signals to the load interrupters.*

APPLICABLE SAFETY ANALYSIS, LCO, and APPLICABILITY

1. Feedwater Reactor Vessel Water Level - Low, Level 3

The Feedwater Reactor Vessel Water Level - Low, Level 3 data originates from three level transmitters that sense the difference between the pressure due to a constant column of water (reference leg) and the pressure due to the actual water level (variable leg) in the vessel. Data from the three level transmitters are received by the three FWC controllers via the data communication function *~~via the three plant multiplexing systems~~. Level 3 trip data is generated in the FWC and the ~~voted~~ results from all three FWC controllers is transmitted to each of the three RFC controllers which use 2/3 logic to create RPT data.*

2. Reactor Vessel Water Level - Low, Level 2

Reactor Vessel Water Level - Low, Level 2 trip data is received from all four ~~SSLC~~ ELCS *divisions by each of the RFC controllers. The ATWS trip logic will generate a trip data value when two of the four are in a tripped state. A trip will occur when needed and spurious trips cannot occur if three of the four Level 2 data values are valid. The basis for this function is as described in the SSLC Sensor Instrumentation LCO (LCO 3.3.1.1).*

Four channels of Reactor Vessel Level -Low, Level 2 are available and three are required to be OPERABLE when ATWS is required to be OPERABLE to ensure that no single instrument failure can preclude an ATWS-RPT from this Function on a valid signal. This Function is considered to be OPERABLE when a Level 2 trip signal originating in each of the ~~SSLC~~ ELCS *channels is received by all three of the RFC controllers.*

3. SB&PC Reactor Steam Dome Pressure - High

The SB&PC Reactor Steam Dome Pressure - High data originates from three pressure transmitters that monitor pressure in the reactor steam dome. Data from the three transmitters are received by the three SB&PC controllers via the plant ~~multiplexing~~ data communication function ~~systems~~. Data values for all three sensors are received by each of the three RFC controllers which use 2/3 logic to create ATWS-RPT data.

APPLICABLE SAFETY ANALYSIS, LCO, and APPLICABILITY (continued)

4. EOC-RPT Initiation

The EOC-RPT initiation signal is a composite signal received from the ~~SSLC~~ RTIS. The ~~allowable values,~~ applicable safety analysis~~,~~ and applicability of this Function ~~is~~ are as described in the SSLC Sensor Instrumentation LCO (LCO 3.3.1.1) for the Turbine Stop Valve-Closure and Turbine Control Valve Fast Closure, Trip Oil Pressure-Low Functions.

Four channels of Turbine Steam Flow Rapid Shutoff EOC-RPT are available and three are required to be OPERABLE to provide confidence that no single instrument failure can preclude an EOC-RPT from this Function on a valid signal. This Function is considered to be OPERABLE when an EOC-RPT trip signal originating in each of the four ~~SSLC~~ RTIS division channels is received by all three of the RFC controllers.

6. Adjustable Speed Drive Pump Trip Actuation

The trip actuation devices in the ASD are required to be operable in order to complete the RIP trip Function. Each ASD uses signals from the RPT Function in all three of the RFC controllers. A trip condition from any two of the controllers will cause a trip of the associated RIP. Three channel~~s~~ of pump trip actuation per ASD must be OPERABLE when ATWS mitigation or EOC-RPT is required to be OPERABLE to provide confidence that no single instrument failure can preclude an RPT from this Function on a valid signal.

ACTIONS

F.1 and F.2

Required Action F.1 is intended to ensure that appropriate actions are taken for if the required Actions and associated Completion Times for the EOC-RPT Functions are not met. Required Action F.1 requires the MCPR limit for inoperable EOC-RPT, as specified in the COLR, to be applied, which restores the MCPR margin to within the limits assumed in the safety analysis.

Alternately the power level may be reduced to below the applicability of the EOC-RPT for the Function associated with the EOC-RPT (Required Action F.2).

The ~~[2]~~ hour Completion Time to implement the Required Actions is sufficient for the operator to determine which action is appropriate and to take corrective action, and takes into account the specified high reliability of the devices used to implement the EOC-RPT and the low likelihood of an event requiring actuation of the EOC-RPT instrumentation during this period.

G.1

This required Action assures that appropriate compensatory measures are taken for inoperable channels in Functions with one or two channels.

Because of the low probability of an event requiring these Functions, ~~[24]~~ hours is provided to restore the inoperable functions.

SURVEILLANCE REQUIREMENTS

STD DEP 16.3-99 *SR 3.3.4.1.2*

A CHANNEL FUNCTIONAL TEST is performed on each required channel to ensure that the entire channel will perform the intended function.

~~*If the as found trip point is not within its required Allowable Value, the plant specific setpoint methodology may be revised, as appropriate, if the history and all other pertinent information indicate a need for the revision. The as left trip point shall be consistent with the assumptions of the current plant specific setpoint methodology.*~~

The frequency of ~~[92~~ 31~~]~~ days is based on the specified high reliability and redundancy of the devices used to implement the Functions, the specified low drift of the devices and the signal validation tests that are automatically and continuously performed on the channels. This surveillance for the Reactor Water Level - Low, Level 2, and Turbine Steam Flow Rapid Shutoff Functions must be performed in conjunction with the equivalent surveillances in the SSLC Sensor Instrumentation LCO (LCO 3.3.1.1).

STD DEP 16.3-99 *SR 3.3.4.1.3*

A CHANNEL CALIBRATION is a complete check of the instrument processing channel and the sensor. This test verifies that the channel responds to the measured parameter within the specified range and accuracy. CHANNEL CALIBRATION leaves the channel adjusted to account for instrument drifts between successive calibrations. Measurement and setpoint error historical determinations must be performed consistent with the plant specific setpoint methodology. The channel shall be left calibrated consistent with the assumptions of the setpoint methodology.

~~*If the as found setpoint is not within its required Allowable Value, the plant specific setpoint methodology may be revised, as appropriate, if the history and all other pertinent information indicate a need for the revision. The setpoint shall be left set consistent with the assumptions of the current plant specific setpoint methodology.*~~

STD DEP 16.3-55 SR 3.3.4.1.5

This SR ensures that the individual channel response times are less than or equal to the maximum values assumed in the accident analysis. The ~~EOC~~ RPT SYSTEM RESPONSE TIME acceptance criteria are included in Reference 5.

SR 3.3.4.1.7

A CHANNEL FUNCTIONAL TEST is performed on each manual ATWS ARI channel to ensure that the entire manual trip channel will operate as intended.

This function uses a minimum of components, and the components have been proven highly reliable through operating experience. However, a relatively short surveillance interval of ~~[7]~~ days is used since availability of

manual ATWS-ARI is important for providing a diverse means of inserting all of the control rods and the logic is 2/2. The probability of an event requiring manual ATWS-ARI coupled with a failure of one of the ATWS ARI channels within this time period is very low.

STD DEP T1 3.4-1

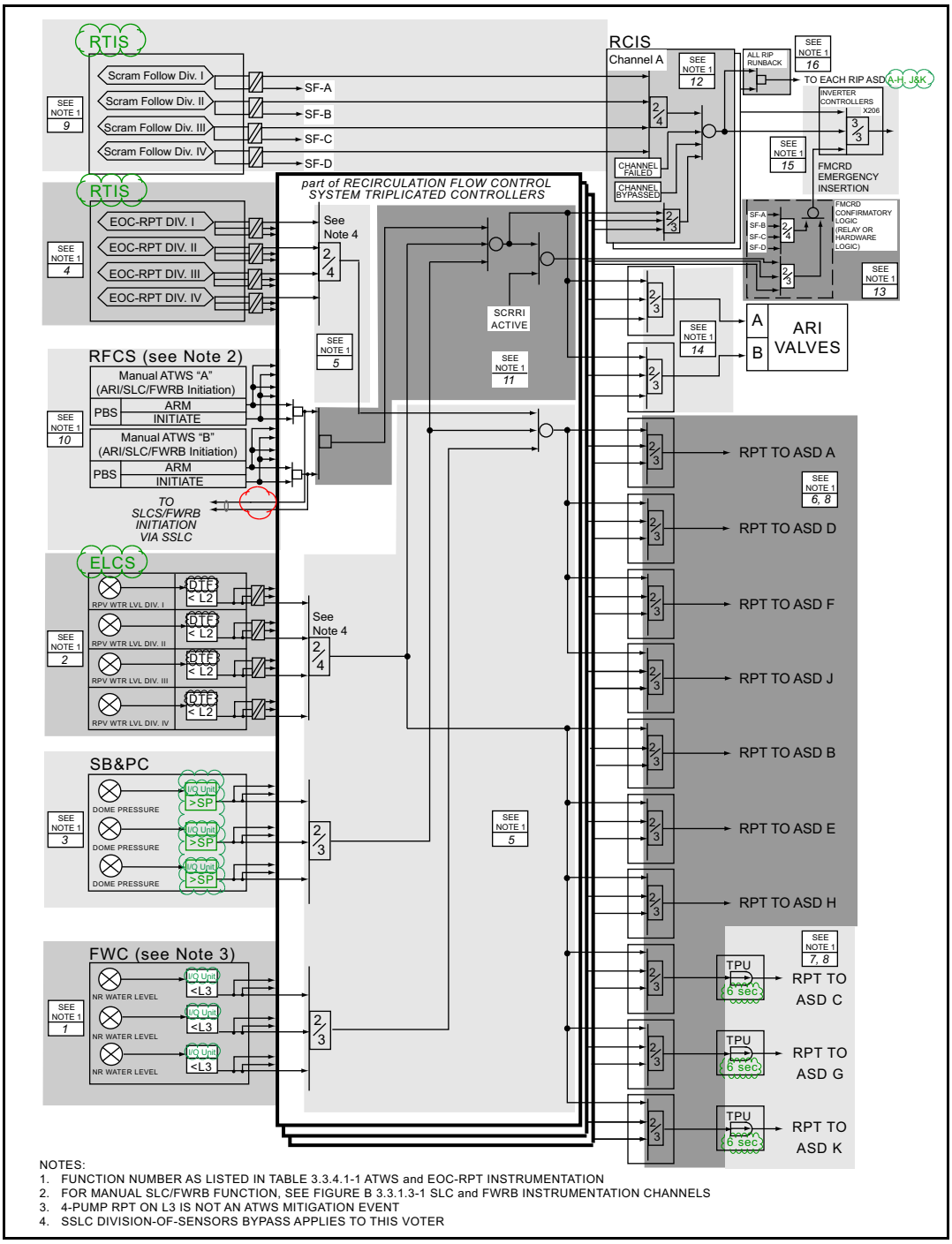

NOTES:
1. FUNCTION NUMBER AS LISTED IN TABLE 3.3.4.1-1 ATWS and EOC-RPT INSTRUMENTATION
2. FOR MANUAL SLC/FWRB FUNCTION, SEE FIGURE B 3.3.1.3-1 SLC and FWRB INSTRUMENTATION CHANNELS
3. 4-PUMP RPT ON L3 IS NOT AN ATWS MITIGATION EVENT
4. SSLC DIVISION-OF-SENSORS BYPASS APPLIES TO THIS VOTER

Figure B 3.3.4.1-1 ATWS and EOC-RPT Instrumentation Channels

B 3.3 INSTRUMENTATION

B 3.3.4.2 Feedwater Pump and Main Turbine Trip Instrumentation

BASES

The information in this section of the reference ABWR DCD, including all subsections, is incorporated by reference with the following departures and site specific supplement. The site specific supplement partially addresses COL License Information Item 16.1.

STP DEP 10.4-5
STD DEP 16.3-97
STD DEP 16.3-99
STD DEP 16.3-104

BACKGROUND

The feedwater pump *and main turbine trip instrumentation is designed to detect a potential failure of the Feedwater Level Control System that causes excessive feedwater flow.*

STD DEP 10.4-5

With excessive feedwater flow, the water level in the reactor vessel rises toward the high water level, Level 8 reference point, causing the trip of the ~~two~~ four *feedwater pump adjustable speed drives (ASDs) and the main turbine.*

Reactor Vessel Water Level – High, Level 8 signals are provided by level sensors that sense the difference between the pressure due to a constant column of water (reference leg) and the pressure due to the actual water level in the reactor vessel (variable leg). Three channels of Reactor Vessel Water Level – High, Level 8 instrumentation provide input to a two-out-of-three initiation logic that trips the ~~two~~ four *feedwater pump ASDs and the main turbine. The channels include electronic equipment (e.g., digital trip logic) that compares measured input signals with pre-established setpoints. When the setpoint is exceeded, the channel outputs a trip signal, which then outputs a main turbine and feedwater pump ASD trip signal to the trip logic.*

APPLICABLE SAFETY ANALYSES

The feedwater pump *and main turbine trip instrumentation is assumed to be capable of providing a* feedwater pump and main *turbine trip in the design basis transient analysis for a feedwater controller failure, maximum demand event (Ref. 1). The Level 8 trip indirectly initiates a reactor scram and EOC-RPT from the main turbine trip (above 40% RTP) and trips the feedwater pumps, thereby terminating the event. The reactor scram EOC-RPT mitigates the reduction in MCPR.*

APPLICABILITY

The feedwater pump *and main turbine trip instrumentation is required to be OPERABLE at ≥ 25% RTP to ensure that the fuel cladding integrity Safety Limit and the cladding 1% plastic strain limit are not violated during the feedwater controller failure, maximum demand event.*

ACTIONS

A Note has been provided to modify the ACTIONS related to the *feedwater* pump *and main turbine trip instrumentation channels. Section 1.3, Completion Times, specifies that once a Condition has been entered, subsequent trains, subsystems, components, or variables expressed in the Condition, discovered to be inoperable or not within limits, will not result in separate entry into the Condition. Section 1.3 also specifies that Required Actions of the Condition continue to apply for each additional failure, with Completion Times based on initial entry into the Condition. However, the Required Actions for inoperable feedwater and main turbine trip instrumentation channels provide appropriate compensatory measures for separate inoperable channels. As such, a Note has been provided that allows separate Condition entry for each inoperable feedwater* pump *and main turbine trip instrumentation channel.*

B.1

With two or more channels inoperable, the feedwater pump *and main turbine trip instrumentation cannot perform its design function (feedwater* pump *and main turbine trip capability is not maintained). Therefore, continued operation is only permitted for a 72 hour period, during which feedwater* pump *and main turbine trip capability must be restored. The trip capability is considered maintained when sufficient channels are OPERABLE or in trip such that the feedwater* pump *and main turbine trip logic will generate a trip on a valid signal. This requires two channels to be OPERABLE or in trip. If the required channels cannot be restored to OPERABLE status or placed in trip, Condition C must be entered and its Required Action taken.*

C.1

With the required channels not restored to OPERABLE status or placed in trip, THERMAL POWER must be reduced to < 25% RTP within 4 hours. As discussed in the Applicability section of the Bases, operation below 25% RTP results in sufficient margin to the required limits, and the feedwater pump *and main turbine trip instrumentation is not required to protect fuel integrity during the feedwater controller failure, maximum demand event. The allowed Completion Time of 4 hours is based on operating experience to reduce THERMAL POWER to < 25 % RTP from full power conditions in an orderly manner and without challenging plant systems.*

SURVEILLANCE REQUIREMENTS

SR 3.3.4.2.2

STD DEP 16.3-99

A CHANNEL FUNCTIONAL TEST is performed on each required channel to ensure that the entire channel will perform the intended function.~~ If the as found setpoint is not within its required Allowable Value, the plant specific setpoint methodology may be revised, as appropriate, if the history and all other pertinent information indicate a need for the revision. The setpoint shall be left set consistent with the assumptions of the current plant specific setpoint methodology.~~

STD DEP 16.3-104

The Frequency of ~~[92~~ 31*~~]~~ days is based on the* specified high reliability, redundancy and low drift of the devices used to implement the Feedwater Pump and Main Turbine Trip Function. In addition, the self-test features of the Feedwater Pump and Main Turbine Trip Instrumentation provide confidence that most failures that occur between surveillances will be automatically detected *~~system capability to automatically perform self-tests and diagnostics~~.*

STD DEP 16.3-99

SR 3.3.4.2.3

SENSOR CHANNEL CALIBRATION is a complete check of the instrument loop and the sensor. This test verifies the channel responds to the measured parameter within the necessary range and accuracy. SENSOR CHANNEL CALIBRATION leaves the channel adjusted to account for instrument drifts between successive calibrations. Measurement and setpoint error historical determinations must be performed consistent with the plant specific setpoint methodology. The channel shall be left calibrated consistent with the assumptions of the setpoint methodology.

~~If the as found setpoint is not within its required Allowable Value, the plant specific setpoint methodology may be revised, as appropriate, if the history and all other pertinent information indicate a need for the revision. The setpoint shall be left set consistent with the assumptions of the current plant specific setpoint methodology.~~

[This page intentionally left blank]

B 3.3

B 3.3 INSTRUMENTATION

B 3.3.5.1 Control Rod Block Instrumentation

BASES

The information in this section of the reference ABWR DCD, including all subsections, is incorporated by reference with the following departures and site specific supplements. The site specific supplements partially address COL License Information Item 16.1.

STD DEP T1 3.4-1
STD DEP 16.3-66
STP DEP 16.3-67
STD DEP 16.3-99
STD DEP 16.3-101
STD DEP 16.3-102

BACKGROUND

The ATLM and RWM are subsystems of the Rod Control and Information System (RCIS). The RCIS is a non-safety system (category 3) but is made up of dual redundant channels to assure high availability. Both channels independently acquire all of the required data and perform identical functions. The RCIS functions are implemented on microprocessors with a high degree of segmentation within the system. The data needed by the RCIS is acquired from ~~the Essential Multiplexing System~~ ~~Essential Communication Function (ECF) with suitable isolators,~~ the RCIS ~~multiplexing system~~ Data Communication Function (DCF)*, or the ~~Non Essential Multiplexing System~~* Plant Data Network (PDN)*. The rod block logic is arranged so that a rod block from either channel will prevent rod withdrawal.*

The thermal limits information calculated in the ~~process~~ plant *computer is based on various process parameters~~ measured acquired by the process computer~~.*

STD DEP 16.3-66

APPLICABLE SAFETY ANALYSIS, LCO, and APPLICABILITY

1.a Automatic Thermal Limit Monitor

The ATLM is assumed to prevent the consequences of a Rod Withdrawal Error (RWE) event when operating with reactor power above ~~[~~30%~~]~~ RTP. Below this power level, the consequences of an RWE event will not exceed the fuel thermal limits, and therefore the ATLM is not required to be OPERABLE. Therefore the LPSP allowable value must be ~~[~~30%~~]~~ RTP or below to assure ATLM operability above ~~[~~30%~~]~~ RTP.

1.b. Rod Worth Minimizer (RWM)

Compliance with the GWSR, and therefore OPERABILITY of the RWM, is required in MODES 1 and 2 with THERMAL POWER below ~~[~~10%~~]~~

APPLICABLE SAFETY ANALYSIS, LCO, and APPLICABILITY (Continued)

RTP. The LPSP Allowable Value must be ~~[~~10%~~]~~ RTP or above to ensure required operability of the RWM below ~~[~~10%~~]~~ RTP. When THERMAL POWER is above ~~[~~10%~~]~~ RTP there is no possible control rod configuration that results in a control rod worth that could exceed the fuel damage limit for the worst case RWE. In MODES 3 and 4, all control rods are required to be inserted in the core. In MODE 5, restrictions on control rod withdrawals in core cells containing fuel assemblies provides sufficient Shutdown Margin (SDM) to assure that the reactor is subcritical and the consequences of a RWE are within limits.

2. Reactor Mode Switch – Shutdown Position

~~Three~~ Four *channels are required to be OPERABLE to ensure that no single channel failure will preclude a rod block when required.*

STD DEP 16.3-67
STD DEP 16.3-101

ACTIONS

A.1 and A.2

When either ATLM becomes inoperable a rod block is issued and automatic RCIS actions prohibited by forcing the RCIS to be in the manual mode. Automatic operation can be restored only by restoring ATLM operation. Manual control of rod withdrawal (in either RCIS manual or semi-automatic mode) may proceed if the inoperable ATLM is placed in bypass. The ~~[~~72~~]~~ hour Completion Time for Action A.1 is based on the low probability of an event occurring coincident with a failure of the remaining OPERABLE channel and the *high reliability of the ATLM Function, and provides sufficient time to effect repairs.*

Alternately, plant maneuvering may continue if operation within thermal limits is verified by other suitable means as described above.

C.1

When either RWM becomes inoperable a rod block is issued and automatic RCIS actions prohibited by forcing the RCIS to be in the manual mode. Automatic operation can be restored only by restoring RWM operation. Manual control rod withdrawal may proceed (in the RCIS manual or semi-automatic mode) if the inoperable RWM is placed in bypass. The 72 hour Completion Time is based on the low probability of an event occurring coincident with a failure of the remaining OPERABLE channel and the *high reliability of the RWM Function, and provides sufficient time to effect repairs. The RWM is considered to remain OPERABLE when individual control rods are bypassed as required by LCO 3.1.3 or LCO 3.1.6.*

E.1 and E.2

If there are failures of the Reactor Mode Switch – Shutdown Position Function the plant must be placed in a condition where the LCO does not

apply. This is accomplished by suspending all control rod withdrawal immediately (Action E.1), and initiating ~~to fully inserting~~ full insertion of *all insertable control rods in core cells containing one or more fuel assemblies (Action E.2).*

SURVEILLANCE REQUIREMENTS

SR 3.3.5.1.1 and SR 3.3.5.1.2

STD DEP 16.3-99

The CHANNEL FUNCTIONAL TESTS for the ATLM and RWM are performed using simulated data that emulates an action outside of permissible rod withdrawals and verifying that a rod block output occurs. ~~If the rod blocks do not occur within the specified allowable values , the plant specific setpoint methodology may be revised, as appropriate, if the history and all other pertinent information indicate a need for the revision. The setpoint shall be left set consistent with the assumptions of the current plant specific setpoint methodology.~~ As noted, the SRs are not required to be performed until 1 hour after specified conditions are met (e.g., after any control rod is withdrawn in MODE 2). This allows entry into the appropriate conditions needed to perform the required SRs.

The ~~[92~~ 31*~~]~~ day frequencies are based on the specified high reliability and low drift of the devices that are used to implement the RWM and ATLM. In Addition, the self test features provide confidence that most failures that occur between surveillances will be automatically detected. These features, coupled with the use of 2/2 logic before rod withdrawal is permitted, provides confidence that the frequency is adequate.*

SR 3.3.5.1.3 and SR 3.3.5.1.4

The LPSP is the point where the transition is made between the ATLM and RWM functions. The Allowable Value for the LPSP is in the range of ~~[10]~~% to ~~[30]~~% RTP. The effective setpoint of the LPSP must be periodically confirmed.

STD DEP 16.3-102

SR 3.3.5.1.6

The ~~process computer~~ Plant Computer Function (PCF) *calculations that provide setpoints to the ATLM use~~s~~ various measured process parameters. A CHANNEL CHECK ~~on~~* of *the parameters is performed every ~~[24]~~ hours. These parameters are:*

a. FMCRD cooling water flow,
b. Feedwater flow,
c. Feedwater temperature,
d. Recirculation flow,
e. RPV pressure,
f. CUW flow,
g. APRM, and
h. Selected LPRMs.

Performance of the CHANNEL CHECK provides confidence that a gross failure of a device in a channel has not occurred. A CHANNEL CHECK is a comparison of the parameter indicated in one channel to a similar parameter in a different channel. It is based on the assumption that

SURVEILLANCE REQUIREMENTS (Continued)

channels monitoring the same parameter should read approximately the same value. Significant deviations between the channels could be an indication of excessive instrument drift on one of the channels or other channel faults.

Agreement criteria are determined by the plant staff based on a combination of the channel instrument and parameter indication uncertainties.

The Frequency is based on operating experience that demonstrates channel failure is rare and on the online diagnostics that monitor the channels for proper operation. *The specified high reliability of each channel provides confidence that a channel failure will be rare. The CHANNEL CHECK*s every 24 hours *supplement~~s~~ less formal, but more frequent, checks of channels during normal operational use of the displays associated with the channels required by the LCO.*

B 3.3 INSTRUMENTATION

B 3.3.6.1 Post Accident Monitoring (PAM) Instrumentation

BASES

The information in this section of the reference ABWR DCD, including all subsections, is incorporated by reference with the following departures and site specific supplements. The site-specific supplements partially address COL License Information Item 16.1.

STD DEP T1 2.3.1
STD DEP T1 2.14-1
STD DEP T1 3.4-1
STD DEP 7.5-1
STD DEP 16.3-77
STD DEP 16.3-78

STD DEP T1 3.4-1

LCO

Listed below is a discussion of each of the specified instrument Functions listed in Table 3.3.6.1-1. Data for most of the display Functions are transmitted to the operator displays via the four divisions of the Essential Communication Function (ECF) ~~*Multiplexer System (EMS)*~~*. Exceptions are noted in the following discussions for each Function.*

STD DEP 16.3-77

4. Suppression Pool Water Level

Suppression pool water level is a Category I variable provided to detect a breach in the reactor coolant pressure boundary (RCPB). This variable is also used to verify and provide long term surveillance of ECCS function. ~~*The wide range s*~~*Suppression pool water level measurement provides the operator with sufficient information to assess the status of the RCPB and to assess the status of the water supply to the ECCS.* ~~*The wide range water level indicators monitor the suppression pool level from the bottom of the ECCS suction lines to five feet above the normal suppression pool level. Four wide range suppression pool water level signals are transmitted from separate differential pressure transmitters.*~~ Suppression pool water level is monitored by four divisions of narrow range level instrumentation measuring from 0.5 meters above to 0.5 meters below normal water level, and two wide range instruments measuring from the centerline of the ECCS suction piping to the wetwell spargers. *Suppression pool water level is continuously displayed in the control room. These displays are the primary indication used by the operator during an accident. Therefore, the PAM Specification deals specifically with this portion of the instrument channel.*

5.a. Drywell Pressure, 5.b. ~~Wide Range Containment~~ Wetwell Pressure

Drywell and wetwell *pressure ~~is a~~* are Type A, *Category I variables provided to detect breach of the RCPB and to verify ECCS functions that operate to maintain RCS integrity. Requirements for monitoring of drywell pressure are specified for both narrow range and wide range. The narrow range monitoring requirement is satisfied in the existing essential safety system designs by the four divisions of drywell pressure instruments which provide inputs to the initiation of the Reactor Protection System (RPS) and the Emergency Core Cooling Systems (ECCS).*

The requirement for unambiguous wide range drywell pressure monitoring are satisfied with two channels of drywell *instrumentation and integration with* two channels of *wetwell pressure instrumentation. Given the existence of (1) the normal pressure suppression vent path between the drywell and wetwell and (2) the wetwell to drywell vacuum breakers, the long-term pressure within the drywell and wetwell will be approximately the same. Drywell* and wetwell *pressure signals are transmitted from separate pressure transmitters. Drywell* and wetwell *pressure is continuously displayed in the main control room. These displays are the primary indication used by the operator during an accident. Therefore, the PAM Specification deals specifically with this portion of the instrument channel.*

8. Primary Containment Isolation Valve (PCIV) Position (continued)

If a penetration flow path is isolated by at least one closed and de-activated automatic valve, closed manual valve, blind flange,or check valve with flow through the valve secured, position indication for the PCIV(s) in the associated penetration flow path is not needed to determine status. Therefore, per footnote (b) in Table 3.3.6.1-1, the position indication for valves in an isolated penetration is not required to be OPERABLE.

Indication of the completion of the containment isolation function is provided by valve closed/not closed indications for individual valves on safety related displays. Annunciators are provided to alert the operator to any lines that may not be isolated.

For this plant, the PCIV position PAM instrumentation consists of ~~the following:~~ position switches, associated connections and control room indication for active PCIVs (check valves and manual valves are not required to have position indication).

STD DEP T1 2.14-1

~~*11. and 12. Containment Atmospheric Monitors - Drywell and Wetwell Hydrogen and Oxygen Analyzer*~~

~~*Drywell and wetwell hydrogen and oxygen analyzers are Category I instruments provided to detect high hydrogen or oxygen concentration conditions that represent a potential for containment breach. These parameters are also important in verifying the adequacy of mitigating actions. There are two divisions in the Containment Atmospheric*~~

~~*Monitoring System analyzers with one channel of H2 monitoring and one channel of O2 monitoring per division. Samples of either the drywell or wetwell are drawn into the analyzers based on the position of a selector switch in the main control room. Displays and alarms are provided in the main control room. These displays are the primary indication used by the operator during an accident. Therefore, the PAM Specification deals specifically with this portion of the instrument channel.*~~

STD DEP 16.3-78 ~~*13. Containment Water Level.*~~

~~*Containment Water Level displays are Category I instruments provided for early detection of small leaks in the containment and as an alternate to drywell pressure and drywell radiation Functions. There are two channels of Containment Water Level with displays and alarms provided in the main control room. These displays are the primary indication used by the operator during an accident. Therefore, the PAM Specification deals specifically with this portion of the instrument channel.*~~

STD DEP T1 2.14-1
STD DEP 16.3-78 ~~*14*~~*11. Suppression Pool Water Temperature*

~~*15*~~*12. Drywell Atmosphere Temperature*

STD DEP T1 2.3-1 ~~*16. Main Steam Line Radiation*~~

~~*Main steam line radiation is a Category I variable provided to monitor fuel integrity. Radiation in the main steam line tunnel - which is measured by the process radiation monitoring system - is an indicator of coolant radiation. There are four divisions of main steam tunnel radiation monitoring with a control room display channel from each division. These displays are the primary indication used by the operator during an accident. Therefore, the PAM Specification deals specifically with this portion of the instrument channel.*~~

STD DEP 7.5-1 13. Wetwell Atmosphere Temperature

Wetwell Atmosphere Temperature is a Category I variable provided to monitor wetwell atmospheric temperature. Multiple temperature sensors dispersed throughout the wetwell provide surveillance monitoring of temperatures in the wetwell, such that the required indication of bulk average wetwell atmosphere temperature is satisfied.

STD DEP T1 2.14-1

ACTIONS (continued) *C.1*

~~*As noted in the LCO this action does not apply to Functions 11 & 12, (hydrogen/oxygen monitors), which are addressed in Condition D.*~~ *When a Function has two required channels that are INOPERABLE then one channel must be restored to OPERABLE status within 7 days. The Completion Time of 7 days is based on the relatively low probability of an event requiring PAM instrument operation and the availability of alternate means to obtain the required information. Continuous operation with two*

required channels inoperable in a Function is not acceptable because the alternate indications may not fully meet all performance qualification requirements applied to the PAM instrumentation. Therefore, requiring restoration of one inoperable channel of the Function limits the risk that the PAM Function will be in a degraded condition should an accident occur.

Multiple entry into the condition table causes Condition A to be invoked on completion of Action C.1 so appropriate additional action is taken.

ACTIONS (continued)

~~*D.1*~~

~~*When two hydrogen/oxygen monitor display channels are inoperable, at least one channel must be restored to OPERABLE status within 72 hours. The 72 hour Completion Time is reasonable, based on the backup capability of the Post Accident Sampling System to monitor the hydrogen concentration for evaluation of core damage and to provide information for operator decisions. Also, it is unlikely that a LOCA that would cause core damage would occur during this time.*~~

~~*E*~~D.*1*

This Required Action directs entry into the appropriate Condition referenced in Table 3.3.6.1-1. The applicable Condition referenced in the Table is Function dependent. If the required Action and associated Completion Time for Condition C~~, or D~~ are not met for a Function then Condition D is entered for that function and Table 3.3.6.1-1 used to transfer to the appropriate subsequent Condition.

~~*F*~~E.*1*

For the PAM Functions in Table 3.3.6.1-1, if any Required Action and associated Completion Time of Condition C~~ or D~~ is not met, the plant must be placed in a MODE in which the LCO does not apply. This is done by placing the plant in at least MODE 3 within 12 hours.

The allowed Completion Times are reasonable, based on operating experience, to reach the required plant condition from full power conditions in an orderly manner and without challenging plant systems.

~~*G*~~F.*1*

Since alternate means of monitoring the parameters to which this Condition applies have been developed and tested, the Required Action is to submit a report to the NRC instead of requiring a plant shut down. These alternate means may be temporarily installed if the normal PAM channel cannot be restored to OPERABLE status within the allotted time. The report provided to the NRC should discuss the alternate means used, describe the degree to which the alternate means are equivalent to the installed PAM channels, justify the areas in which they are not equivalent, and provide a schedule for restoring the normal PAM channels.

SURVEILLANCE REQUIREMENTS

The following SRs apply to each PAM instrumentation Function in Table 3.3.6.1-1, except SR 3.3.6.1.1 does not apply to Function 8.

SR 3.3.6.1.1

Performance of a CHANNEL CHECK once every [31] days ensures that a gross instrumentation failure has not occurred. A CHANNEL CHECK is a comparison of the parameter indicated on one instrumentation channel to a similar parameter on other instrumentation channels. It is based on the assumption that independent displays of the same parameter should read approximately the same value. Significant deviations between displays could be an indication of excessive instrument drift or other faults in one of the channels. A CHANNEL CHECK will detect gross channel failure; thus, it is key to verifying the instrumentation continues to operate properly between each CHANNEL CALIBRATION.

Agreement criteria are determined by the plant staff based on a combination of the channel instrument uncertainties, including isolation, indication, and readability. If a channel is outside the match criteria, it may be an indication that the sensor or the signal processing equipment has drifted outside its limit. Performance of the CHANNEL CHECK provides confidence that undetected outright channel failure is limited to [31] days.

The high reliability of the devices used to implement the PAM functions provides confidence that failure of more than one channel of a given function in any [31] day interval is rare. The CHANNEL CHECK supplements less formal, but more frequent, checks of channels during normal operational use of those displays associated with the required channels of this LCO.

REFERENCES

1. *Regulatory Guide 1.97, "Instrumentation for Light-Water Cooled Nuclear Power Plants to Assess Plant and Environs Conditions During and Following an Accident," [*Revision 3, May 1983*]* .

2. *DCD Tier 2, Section 7.5*

[This page intentionally left blank]

B 3.3 INSTRUMENTATION

B 3.3.6.2 Remote Shutdown System

BASES

The information in this section of the reference ABWR DCD, including all subsections, is incorporated by reference with the following departures and site specific supplements. The site specific supplements partially address COL License Information Item 16.1.

STD DEP T1 2.14-1
STD DEP T1 3.4-1 (All)
STD DEP 8.3-1
STD DEP 16.3-59
STD DEP 16.3-60

STD DEP 8.3-1
STD DEP T1 2.14-1

BACKGROUND

The Remote Shutdown System provides the control room operator with sufficient instrumentation and controls to place and maintain the plant in a safe shutdown condition from a location other than the control room. This capability is necessary to protect against the possibility of the control room becoming inaccessible. A safe shutdown condition is defined as MODE 3. With the plant in MODE 3, the High Pressure Core Flooder System, the safety/relief valves, and the Residual Heat Removal System Shutdown Cooling and Suppression Pool Cooling Modes can be used to remove core decay heat and meet all safety requirements. Additional systems assisting in the remote shutdown capability are portions of the Nuclear Boiler System, the Reactor Building Cooling Water System, the Reactor Building Service Water System, and the ~~Electrical~~ ~~Medium Voltage~~Electric Power Distribution System~~, and the Flammability Control System~~. The long term supply of water for the HPCF and the ability to operate shutdown cooling from outside the control room allow extended operation in MODE 3.

The functions needed for remote shutdown control are transferred to the remote shutdown panels using manual switches that disable control of the functions from the main control room and enable control from the remote shutdown panels. Control signals are interrupted by the transfer devices at the hardwired, analog loop. Sensor signals which interface with the remote shutdown system for local display of process variables are continuously powered and available for monitoring at all times. ~~*Control signals from the main control room are routed from the Remote Digital Logic Controllers Multiplexing Units (RMUsRDLCs) to remote shutdown transfer devices, and then to the interfacing system equipment. Actuation of the transfer switches bypasses the DLCs and connects the control signals directly to the remote shutdown panels.*~~Control signals are switched from ELCS I/Os directly to the remote shutdown panels by transfer switches.

STD DEP 16.3-59
LCO

12, and 13. RPV Wide Range~~/Narrow~~ Shutdown Range Water Level.

Reactor vessel water level is provided to support monitoring of core cooling, to verify operation of the make up pumps, and is needed for satisfactory operator control of the make up pumps. The wide range water level channels cover the range from the near top of the fuel to near the top of the steam separators. The ~~narrow~~ shutdown range provides indication from near the bottom of the separators to above the steam lines. RPV level is a necessary parameter for achieving and maintaining the reactor in MODE 3. One channel of each range is provided on each of the RSS panels. Both channels are required to be OPERABLE to provide redundant capability to achieve MODE 3 from both RSS panels.

STD DEP 16.3-60

14, 15, 16 and ~~16~~17. Reactor Building Cooling Water Flow/Controls & Reactor Building Service Water Strainer Differential Pressure/Controls.

These parameters and controls are required to monitor and control the water supply for cooling the equipment needed to achieve MODE 3 and to provide containment heat removal. The Reactor Building Cooling Water controls provided are as given in reference 4 and the Reactor Building Service Water controls provided are as given in reference 5. One channel of each Function is provided on each of the RSS panels. Both channels of each Function are required to be OPERABLE to provide redundant capability to achieve MODE 3 from both RSS panels.

STD DEP 2.14-1

~~*17. Cooling Water Flow to Flammability Control System.*~~

~~*A control for the FCS B inlet valve is provided on the division II panel only. This control is needed in order for the operator to isolate cooling water flow to FCS. One channel is required to be OPERABLE to assure that MODE 3 can be achieved from the Division II RSS panel.*~~

ACTIONS

A.1

Condition A addresses the situation where one or more required Functions are inoperable in one of the RSS divisions. This includes any Function listed in Table 3.3.6.2-1, as well as the control and transfer switches.

The Required Action is to restore the inoperable division of the Function to OPERABLE status within [90] days. The Completion Time is based on the specified high reliability of the devices used to implement the Functions and the low probability of an event that would require evacuation of the control room coupled with an undetected failure in the other RSS division.

B 3.3 INSTRUMENTATION

B 3.3.7.1 Control Room Habitability Area (CRHA) Emergency Filtration (EF) System Instrumentation

BASES

The information in this section of the reference ABWR DCD, including all subsections, is incorporated by reference with the following departure and site specific supplements. The site specific supplements partially address COL License Information Item 16.1.

STD DEP 16.3-99

SURVEILLANCE REQUIREMENTS

As noted at the beginning of the SRs, the SRs for each CRHA and Emergency Filtration Instrumentation Function are located in the SRs column of Table 3.3.7.1-1.

SR 3.3.7.1.1

Performance of the CHANNEL CHECK once every [~~24~~12] hours ensures that a gross failure of instrumentation has not occurred. A CHANNEL CHECK is a comparison of the indicated parameter for one instrument channel to a similar parameter on other channels. It is based on the assumption that instrument channels monitoring the same parameter should read approximately the same value. Significant deviations between the instrument channels could be an indication of excessive instrument drift in one of the channels or other channel faults. A CHANNEL CHECK will detect gross channel failure; thus, it is key to verifying the instrumentation continues to operate properly between each CHANNEL FUNCTIONAL TEST.

Agreement criteria are determined by the plant staff based on a combination of the channel instrument and parameter indication uncertainties.

The Frequency is based upon operating experience that demonstrates channel failure is rare. Thus, performance of the CHANNEL CHECK ensures that undetected outright channel failure is limited to [~~24~~ 12] hours. The CHANNEL CHECK supplements less formal, but more frequent, checks of channel status during normal operational use of the displays associated with channels required by the LCO.

SR 3.3.7.1.2

A CHANNEL FUNCTIONAL TEST is performed on each required channel to ensure that the entire channel will perform the intended function and that the setpoints in the initiation logic devices are correct.

The Frequency of [~~92~~ 31] days is based on requiring the Emergency Filtration train to operate for a specified duration every [92] days.

SURVEILLANCE
REQUIREMENTS
(continued)

STD DEP 16.3-99 *SR 3.3.7.1.3*

A CHANNEL CALIBRATION is a complete check of the instrument channel and the sensor. This test verifies the channel responds to the measured parameter within the necessary range and accuracy. CHANNEL CALIBRATION leaves the channel adjusted to account for instrument drifts between successive calibrations. Measurement and setpoint error historical determinations must be performed consistent with the plant specific setpoint methodology. The channel shall be left calibrated consistent with the assumptions of the setpoint methodology.

~~*If the as found trip points (fixed or variable) is not within its Allowable Value, the plant specific setpoint methodology may be revised, as appropriate, if the history and all other pertinent information indicate a need for the revision. The setpoint shall be left set consistent with the assumptions of the current plant specific setpoint methodology.*~~

B 3.3 INSTRUMENTATION

B 3.3.8.1 Electric Power Monitoring

BASES

The information in this section of the reference ABWR DCD, including all subsections, is incorporated by reference with the following departure and site specific supplement. The site specific supplement partially addresses COL License Information Item 16.1.

STD DEP 16.3-62

ACTIONS

C.1 and C.2

If any Required Action and associated Completion Time of Condition A or B is not met in MODE 1, 2, or 3, a plant shutdown must be performed. This places the plant in a condition where minimal equipment, powered through the inoperable electric power monitoring assembly(s) (power monitor), is required and ensures that the safety function of the RPS (e.g., scram of control rods) is not required.

D.1, D.2.1, and D.2.2

If any Required Action and associated Completion Time of Condition A or B are not met in MODE 4 or 5, with any control rod withdrawn from a core cell containing one or more fuel assemblies or with both isolation valves of a RHR shutdown cooling subsystem open, the operator must immediately initiate action to fully insert all insertable control rods in core cells containing one or more fuel assemblies (Required Action D.1).

SURVEILLANCE REQUIREMENTS

SR 3.3.8.1.1

A CHANNEL FUNCTIONAL TEST is performed on each overvoltage. undervoltage, overfrequency, and underfrequency channel to ensure that the entire channel will perform the intended function.

The [~~92~~ 31] day frequency is based on the specified high reliability and low drift of the devices that are used to implement the Functions.

[This page intentionally left blank]

B 3.3 INSTRUMENTATION

B 3.3.8.2 Reactor Coolant Temperature Monitoring

BASES

The information in this section of the reference ABWR DCD, including all subsections, is incorporated by reference with the following departure and site specific supplements. The site specific supplements partially address COL License Information Item 16.1.

STD DEP 16.3-63

BACKGROUND

The temperature monitoring instrumentation will provide temperature indication and trends to the operator in the main control room during RHR decay heat removal operation. One temperature monitoring transmitter *for each RHR channel is available to monitor reactor coolant temperature at the inlet to the RHR heat exchanger.*

SURVEILLANCE REQUIREMENTS

SR 3.3.8.2.1

Performance of the CHANNEL CHECK ensures that a gross failure of instrumentation has not occurred between Channel Functional Tests. A CHANNEL CHECK is a comparison of the parameter indicated on one channel to the same parameter indicated on other similar channels. It is based on the assumption that instrument channels monitoring the same parameter should read approximately the same value. Significant deviations between the instrument channels could be an indication of excessive instrument drift or other channel faults in one of the channels.

Agreement criteria are determined by the plant staff, based on a combination of the channel instrument uncertainties, including indication and readability. If a channel is outside the match criteria, it may be an indication that the instrument has drifted outside its limit.

The specified high reliability of each temperature monitoring channel provides confidence that a channel failure will be rare. However, a surveillance interval of ~~[~~7~~]~~ days is used to provide confidence that gross failures that do not activate an annunciator or alarm will be detected within ~~[~~7~~]~~ days. The CHANNEL CHECK supplements less formal, but more frequent, checks of channels during normal operational use of the displays associated with the channels required by the LCO.

SR 3.3.8.2.2

A CHANNEL FUNCTIONAL TEST is performed on each reactor coolant temperature monitoring channel to ensure that the entire channel will perform the intended function. As noted in the Surveillance, the CHANNEL FUNCTIONAL TEST is only required to be performed prior to RHR shutdown operation. The ~~[~~92~~]~~ 31~~]~~ day frequency is based on the simple

SURVEILLANCE REQUIREMENTS (Continued)

design and reliability of the temperature monitoring instrumentation.

B 3.4 REACTOR COOLANT SYSTEM (RCS)

B 3.4.1 Reactor Internal Pumps (RIPs) – Operating

BASES

The information in this section of the reference ABWR DCD, including all subsections, is incorporated by reference with the following departures.

STD DEP 16.3-5
STD DEP 16.3-6
STD DEP 16.3-96

BACKGROUND

STD DEP 16.3-6

The subcooled water enters the bottom of the fuel channels and contacts the fuel cladding, where heat is transferred to the coolant. As it rises, the coolant begins to boil, creating steam voids within the fuel channel that continue until the coolant exits the core. Because of reduced moderation, the steam voiding introduces negative reactivity that must be compensated for to maintain or to increase reactor power. The recirculation flow control allows operators to increase recirculation flow and sweep some of the voids from the fuel channel, overcoming the negative reactivity void effect. Thus, the reason for having variable recirculation flow is to compensate for reactivity effects of boiling over a wide range of power generation (i.e., ~~55~~ 70 to 100% RTP) without having to move control rods and disturb desirable flux patterns.

STD DEP 16.3-5

SURVEILLANCE REQUIREMENTS

SR 3.4.1.1

This SR ensures that the number of ~~OPERABLE~~ operating RIPs is consistent with the assumptions of the applicable DBA and transient analyses. This surveillance is required to be performed once every 24 hours. Operating experience with previous BWR designs has demonstrated that a 24 hour frequency for this type of surveillance is adequate.

STD DEP 16.3-96

APPLICABLE SAFETY ANALYSES

The operation of the Reactor Coolant Recirculation System with 100% core flow is an initial condition assumed in the design basis loss of coolant accident (LOCA) (Ref. 1) and abnormal operating transients (Ref. 2). Rated core flow can be achieved with either nine or ten RIPs in operation. During a LOCA and an all RIPs trip event, all operating RIPs are assumed to trip at time zero due to a coincident loss of offsite power. The subsequent core flow coastdown will be immediate and rapid because of the relatively low inertia of the pumps and motors. However, the RIPs are assumed to have sufficient flow coastdown characteristics to maintain fuel thermal margins during abnormal operational transients (Ref. 2), which are analyzed in DCD Tier 2, Chapter 15.

APPLICABLE SAFETY ANALYSES (Continued)

~~*A plant specific LOCA analysis may be performed assuming only [ ] operating RIPs. This analysis shall demonstrate that, in the event of a LOCA, the Emergency Core Cooling System response will provide adequate core cooling, provided the APLHGR requirements are modified accordingly (Ref. 3).*~~

~~*The transient analyses of the DCD Tier 2, Chapter 15 may also be performed for [ ] RIPs in operation (Ref. 3) to demonstrate sufficient flow coastdown characterisitics to maintain fuel thermal margins during the abnormal operational transients analyzed provided the MCPR requirements are modified. During operation with only [ ] RIPs, modification to the Reactor Protection System average power range monitor (APRM) instrument setpoints is also required to account for the different relationships between reactor internal pump flow (reverse flow through the pump impellers) and reactor core flow. The APLHGR and MCPR setpoints for RIPs in operation are to be specified in the COLR. The APRM flow biased simulated thermal power setpoint is in LCO 3.3.1.1, "SSLC Sensor Instrumentation."*~~

RIPs operating satisfies Criterion 2 of the NRC Policy Statement.

LCO

At least nine RIPs are required to be in operation to ensure that during a postulated LOCA or transient the assumptions of the associated analyses are satisfied. ~~*With only [ ] RIPs in operation, modifications to the required APLHGR limits (LCO 3.2.1, "AVERAGE PLANAR LINEAR HEAT GENERATION RATE (APLHGR)"), MCPR limits (LCO 3.2.2, "MINIMUM CRITICAL POWER RATION (MCPR)"), and APRM Flow Biased Simulated Thermal Power – High Setpoint (LCO 3.3.1.1) may be applied to allow continued operation consistent with the assumptions of Reference 1.*~~

APPLICABILITY

In MODES 1 and 2, requirements for operation of the Reactor Coolant Recirculation System are necessary since there is considerable energy in the reactor core and the limiting design basis transients and accidents are assumed to occur. In MODES 3, 4, and 5, the consequences of an accident are reduced and the flow and coastdown characteristics of the RIPs are not important.

ACTIONS

A.1

With the requirements of the LCO not met, the unit is required to be brought to a MODE in which the LCO does not apply. To achieve this status, the plant must be brought to MODE 3 within 12 hours. In this condition, the RIPs are not required to be operating because of the reduced severity of DBAs and minimal dependence on the RIPs flow and coastdown characteristics. The allowed Completion Time of 12 hours is reasonable, based on operating experience, to reach MODE 3 from full power conditions in an orderly manner and without challenging plant systems.

SURVEILLANCE REQUIREMENTS

SR 3.4.1.1

This SR ensures that the number of operating RIPs is consistent with the assumptions of the applicable DBA and transient analyses. This surveillance is required to be performed once every 24 hours. Operating experience with previous BWR designs has demonstrated that a 24 hour frequency for this type of surveillance is adequate.

REFERENCES

1. *DCD Tier 2, Section 6.3.3.*
2. *DCD Tier 2, Chapter 15.*
3. ~~*[Plant specific analysis for [ ] RIPs operating.]*~~

[This page intentionally left blank]

B 3.4 REACTOR COOLANT SYSTEM (RCS)

B 3.4.2 Safety/Relief Valves (S/RVs)

BASES

The information in this section of the reference ABWR DCD, including all subsections, is incorporated by reference with the following departure and site-specific supplements. The site-specific supplements partially address COL License Information Item 16.1.

STD DEP 16.3-7

LCO

The S/RV setpoints are established to ensure the ASME Code limit on peak reactor pressure is satisfied. The ASME Code specifications require the lowest safety valve be set at or below vessel design pressure, i.e., 8.62 MPaG and the highest safety valve be set so the total accumulated pressure does not exceed 110% of the design pressure for conditions. The ~~transient~~ overpressurization *evaluation~~s~~ in Reference ~~3 are~~* 2 is *based on these setpoints, but also include*s *the additional uncertainties of ± 1% of the nominal setpoint to account for potential setpoint drift to provide an added degree of conservatism.*

ACTIONS

A.1

With the safety function of one required S/RV inoperable, the remaining OPERABLE S/RVs are capable of providing the necessary overpressure protection. ~~[Because of additional design margin, the ASME Code limits for the RCPB can also be satisfied with two S/RVs inoperable.]~~ However, the overall reliability of the pressure relief system is reduced because additional failures in the remaining OPERABLE S/RVs could result in failure to adequately relieve pressure during a limiting event. For this reason, continued operation is permitted for a limited time only.

SURVEILLANCE REQUIREMENTS

SR 3.4.2.2

A manual actuation of each required S/RV is performed to verify that, mechanically, the valve is functioning properly and no blockage exists in the valve discharge line. This can be demonstrated by the response of the turbine control valves or bypass valves, by a change in the measured steam flow, or any other method suitable to verify steam flow. Adequate reactor steam dome pressure must be available to perform this test to avoid damaging the valve. Sufficient time is therefore allowed after the required pressure is achieved to perform this test. Adequate pressure at which this test is to be performed is ~~[~~6.55~~]~~ MPaG (the pressure recommended by the valve manufacturer). Plant startup is allowed prior to performing this test because valve OPERABILITY and the setpoints for overpressure protection are verified, per ASME requirements, prior to valve installation. Therefore, this SR is modified by a Note that states the Surveillance is not

SURVEILLANCE REQUIREMENTS (Continued)

required to be performed until 12 hours after reactor steam dome pressure is ≥ ([6.55] MPaG).

The 12 hours allowed for manual actuation after the required pressure is reached is sufficient to achieve stable conditions for testing and provides a reasonable time to complete the SR. If the valve fails to actuate due only to the failure of the solenoid but is capable of opening on overpressure, the safety function of the S/RV is considered OPERABLE.

The Frequency is consistent with SR 3.4.2.1 to ensure that the S/RVs are manually actuated following removal for refurbishment or lift setpoint testing.

B 3.4 REACTOR COOLANT SYSTEM (RCS)

B 3.4.3 RCS Operational LEAKAGE

BASES

The information in this section of the reference ABWR DCD, including all subsections, is incorporated by reference with the following departures.

STD DEP 7.3-12
STD DEP 16.3-11

APPLICABLE SAFETY ANALYSES

The allowable RCS operational LEAKAGE limits are based on the predicted and observed leakage in operating plants. The normally expected background LEAKAGE due to equipment design and the detection capability of the instrumentation for determining system LEAKAGE were also considered. The evidence from experiments suggests, for LEAKAGE even greater than the specified unidentified LEAKAGE limits, the probability is small that the imperfection or crack associated with such LEAKAGE would grow rapidly.

STD DEP 7.3-12
STD DEP 16.3-11

The unidentified LEAKAGE flow limit allows time for corrective action before the RCPB could be significantly compromised. The ~~[3.785~~19 L/min limit is a small fraction of the calculated flow from a critical crack in the primary system piping (Ref. 6)~~]~~. Crack behavior from experimental programs (Refs. 4 and 5) shows leak rates of ~~tens of thousands liters per second~~ hundreds of liters per minute *will precede crack instability.*

No applicable safety analysis assumes the total LEAKAGE limit. The total LEAKAGE limit considers RCS inventory makeup capability and drywell floor sump capacity.

RCS operational LEAKAGE satisfies Criterion 2 of the NRC Policy Statement.

LCO *RCS operational LEAKAGE shall be limited to:*

a. *Pressure Boundary LEAKAGE*

No pressure boundary LEAKAGE is allowed, being indicative of material degradation. LEAKAGE of this type is unacceptable as the leak itself could cause further deterioration, resulting in higher LEAKAGE. Violation of this LCO could result in continued degradation of the RCPB. LEAKAGE past seals and gaskets is not pressure boundary LEAKAGE.

STD DEP 7.3-12 *b.* *Unidentified LEAKAGE*

Unidentified LEAKAGE of ~~3.785~~ 19 L/min is allowed as a reasonable minimum amount that can be detected within a reasonable time. The drywell air monitoring, drywell sump level monitoring, and drywell air cooler condensate flow rate monitoring equipment are used to detect unidentified LEAKAGE. Violation of this LCO could result in continued degradation of the RCPB.

c. *Total LEAKAGE*

The total LEAKAGE limit is based on a reasonable minimum detectable amount. The limit also accounts for LEAKAGE from known sources (identified LEAKAGE). Violation of this LCO indicates an unexpected amount of LEAKAGE and, therefore, could indicate new or additional degradation in an RCPB component or system.

ACTIONS *A.1*

With RCS unidentified or total LEAKAGE greater than the limits, actions must be taken to reduce the leak. Because the LEAKAGE limits are conservatively below the LEAKAGE that would constitute a critical crack size, 4 hours is allowed to reduce the LEAKAGE rates before the reactor must be shut down. If an unidentified LEAKAGE has been identified and quantified, it may be reclassified and considered as identified LEAKAGE. However, the total LEAKAGE limit would remain unchanged. The 4 hour Completion Time is needed to properly verify the source before the reactor must be shut down.

B.1 and B.2

If any Required Action and associated Completion Time of Condition A is not met or if pressure boundary LEAKAGE exists, the plant must be brought to a MODE in which the LCO does not apply. To achieve this status, the plant must be brought to MODE 3 within 12 hours and to MODE 4 within 36 hours. The allowed Completion Times are reasonable, based on operating experience, to reach the required plant conditions from full power conditions in an orderly manner and without challenging plant systems.

REFERENCES

1. 10 CFR 50.2.
2. 10 CFR 50.55a(c).
3. 10 CFR 50, Appendix A, GDC 55.
4. GEAP-5620, April 1968.

STD DEP 16.3-11

5. NUREG-75/067, October 1975.
6. ~~*[COL Application for Leak-Before-Break Qualification for Piping Systems*~~ FSAR, Section 5.2.5.5.1.~~*]*~~
7. Regulatory Guide 1.45.
8. Generic Letter 88-01, Supplement 1.

[This page intentionally left blank]

B 3.4 REACTOR COOLANT SYSTEM (RCS)

B 3.4.4 RCS Pressure Isolation Valve (PIV) Leakage

BASES

The information in this section of the reference ABWR DCD, including all subsections, is incorporated by reference with no departures or supplements.

[This page intentionally left blank]

B 3.4 REACTOR COOLANT SYSTEM (RCS)

B 3.4.5 RCS Leakage Detection Instrumentation

BASES

The information in this section of the reference ABWR DCD, including all subsections, is incorporated by reference with no departures or supplements.

[This page intentionally left blank]

B 3.4 REACTOR COOLANT SYSTEM (RCS)

B 3.4.6 RCS Specific Activity

BASES

The information in this section of the reference ABWR DCD, including all subsections, is incorporated by reference with no departures or supplements.

[This page intentionally left blank]

B 3.4 REACTOR COOLANT SYSTEM (RCS)

B 3.4.7 Residual Heat Removal (RHR) Shutdown Cooling System – Hot Shutdown

BASES

The information in this section of the reference ABWR DCD, including all subsections, is incorporated by reference with the following departure.

STD DEP 16.3-9

ACTIONS

A.1, A.2, and A.3

The required cooling capacity of the alternate method should be ensured by verifying (by calculation or demonstration) its capability to maintain or reduce temperature. Decay heat removal by ambient losses can be considered as contributing to the alternate method capability. Alternate methods that can be used include (but are not limited to) ~~the Spent Fuel Pool Cooling System, or~~ the Reactor Water Cleanup System.

[This page intentionally left blank]

B 3.4 REACTOR COOLANT SYSTEM (RCS)

B 3.4.8 Residual Heat Removal (RHR) Shutdown Cooling System – Cold Shutdown

BASES

The information in this section of the reference ABWR DCD, including all subsections, is incorporated by reference with the following departure.

STD DEP 16.3-9

ACTIONS

A.1

The required cooling capacity of the alternate method should be ensured by verifying (by calculation or demonstration) its capability to maintain or reduce temperature. Decay heat removal by ambient losses can be considered as contributing to the alternate method capability. Alternate methods that can be used include (but are not limited to) ~~a RHR shutdown cooling subsystem], the Spent Fuel Pool Cooling System or~~ the Reactor Water Cleanup System.

[This page intentionally left blank]

B 3.4 REACTOR COOLANT SYSTEM (RCS)

B 3.4.9 RCS Pressure and Temperature (P/T) Limits

BASES

The information in this section of the reference ABWR DCD, including all subsections, is incorporated by reference with the following departure.

STD DEP 16.3-8

APPLICABLE SAFETY ANALYSES

The P/T limits are not derived from Design Basis Accident (DBA) analyses. They are prescribed during normal operation to avoid encountering pressure, temperature, and temperature rate of change conditions that might cause undetected flaws to propagate and cause nonductile failure of the RCPB, a condition that is unanalyzed. Reference 7 establishes the methodology for determining the P/T limits.

SURVEILLANCE REQUIREMENTS

SR 3.4.9.3 and SR 3.4.9.4 and SR 3.4.9.5

Limits on the reactor vessel flange and head flange temperatures are generally bounded by the other P/T limits during system heatup and cooldown. However, operations approaching MODE 4 and MODE 5 and in MODE 4 with RCS temperature less than or equal to certain specified values require assurance that these temperatures meet the LCO limits.

The flange temperatures must be verified to be above the limits 30 minutes before and while tensioning the vessel head bolting studs to ensure that once the head is tensioned the limits are satisfied. When in MODE 4 with RCS temperature ≤ [27°C], 30 minute checks of the flange temperatures are required because of the reduced margin to the limits. When in MODE 4 with RCS temperature ≤ [38°C], monitoring of the flange temperature is required every 12 hours to ensure the temperatures are within the limits specified in the PTLR.

STD DEP 16.3-8

REFERENCES

1. *10 CFR 50, Appendix G.*
2. *ASME, Boiler and Pressure Vessel Code, Section III, Appendix G.*
3. *ASTM E 185-82, July 1982.*
4. *10 CFR 50, Appendix H.*
5. *Regulatory Guide 1.99, Revision 2, May 1988.*
6. *ASME, Boiler and Pressure Vessel Code, Section XI, Appendix E.*
7. ~~*NEDO-21778-A, December 1978*~~ SIR-05-044-A, "Pressure-Temperature Limits Report Methodology for Boiling Water Reactors," dated April 2007, and approved for referencing in license applications by the NRC in letter dated February 6, 2007 from Ho K Nieh Deputy Director, Division of Policy and Rulemaking, Office of Nuclear Reactor Regulation to Mr. Randy C. Bunt, Chair, BWR Owner's Group.

B 3.4 REACTOR COOLANT SYSTEM (RCS)

B 3.4.10 Reactor Steam Dome Pressure

BASES

The information in this section of the reference ABWR DCD, including all subsections, is incorporated by reference with no departures or supplements.

[This page intentionally left blank]

B 3.5 EMERGENCY CORE COOLING SYSTEMS (ECCS)

B 3.5.1 ECCS – Operating

BASES

The information in this section of the reference ABWR DCD, including all subsections, is incorporated by reference with the following departures.

STD DEP 8.3-1
STD DEP 16.3-10

BACKGROUND

The HPCF System is comprised of two separate subsystems. Each HPCF subsystem (Ref. 1) consists of a single motor driven pump, a flooder sparger above the core, and piping and valves to transfer water from the suction source to the sparger. Suction piping is provided from the CST and the suppression pool. Pump suction is normally aligned to the CST source to minimize injection of suppression pool water into the RPV. However, if the CST water supply is low or the suppression pool level is high, an automatic transfer to the suppression pool water source ensures a water supply for continuous operation of the HPCF System. The HPCF System is designed to provide core cooling over a wide range of RPV pressures, (~~0~~0.69 to 8.12 MPaD), vessel to the air space of the compartment containing the water source for the pump suction. Upon receipt of an initiation signal, the HPCF pumps automatically start (when electrical power is available) and valves in the flow path begin to open. Since the HPCF System is designed to operate over the full range of RPV pressures, HPCF flow begins as soon as the necessary valves are open. A full flow test line is provided to route water from and to the ~~CST~~ suppression pool to allow testing of the HPCF System during normal operation without injecting water into the RPV.

The RCIC System is designed to provide core cooling for a wide range of reactor pressures, 1.035 MPa~~G~~D to 8.12 MPa~~G~~D, vessel to the air space of the compartment containing the water source for the pump suction. Upon receipt of an initiation signal, the RCIC turbine accelerates to a specified speed. As the RCIC flow increases, the turbine control valve is automatically adjusted to maintain design flow. Exhaust steam from the RCIC turbine is discharged to the suppression pool. A full flow test line is provided to route water from and to the suppression pool to allow testing of the RCIC System during normal operation without injecting water into the RPV. For the station black out scenario, where all AC power from the offsite AC circuits and from the standby diesel generators are assumed to be lost, RCIC is designed to provide makeup water to the RPV. Diverse alternatives to RCIC are provided by the Combustion Turbine Generator (CTG) and the AC-Independent Water Addition (ACIWA) mode of RHR(C) (References 13 and 14). If RCIC is inoperable, water can be injected into the RPV either by powering other ECCS subsystems from the CTG or by the Fire Protection System (FPS) using the ACIWA mode of RHR(C).

The ADS (Ref. 1) consists of 8 of the 18 S/RVs. It is designed to provide depressurization of the primary system during a small break LOCA if RCIC and HPCF fail or are unable to maintain required water level in the RPV. ADS operation reduces the RPV pressure to within the operating pressure range of the low pressure ECCS subsystems (LPFL), so that these subsystems can provide core cooling. Each ADS valve is supplied with pneumatic power from its own dedicated accumulator located in the drywell~~, or from the atmospheric control system (ACS) directly when pneumatic power from the accumulators is not needed~~. The ACS ~~also~~ supplies the nitrogen (at pressure) necessary to assure the ADS accumulators remain charged for use in emergency actuation. If nitrogen is not available from the ACS, nitrogen is supplied from the High Pressure Nitrogen Gas Supply System via high pressure nitrogen gas storage bottles.

STD DEP 8.3-1

LCO

Each ECCS subsystem and eight ADS valves are required to be OPERABLE. The ECCS subsystems are defined as the three LPFL subsystems, the two HPCF subsystems, and the RCIC System. The high pressure ECCS subsystems are defined as the two HPCF subsystems and the RCIC System.

The CTG, when used as a temporary substitute for the loss of RCIC must be capable of starting, accelerating to required speed and voltage, and of being manually configured to provide power to the ESF bus. This sequence must be accomplished in less than 10 minutes. The CTG must also be capable of accepting required loads and maintaining rated frequency and voltage when connected to the ESF bus. The 10-minute starting time takes into account the capacity and capability of the remaining AC sources, reasonable time for startup of the CTG, and the low probability of a DBA occurring during this period.

With less than the required number of ECCS subsystems OPERABLE during a limiting design basis LOCA concurrent with the worst case single failure, the margins to the limits specified in 10 CFR 50.46 (Ref. 7) would be reduced. Furthermore, all ECCS subsystems are assumed to be initially available in the comprehensive set of analyses performed to satisfy the single failure criterion required by 10 CFR 50.46 (Ref. 7). Thus all ECCS subsystems must be OPERABLE. The ECCS is supported by other systems that provide automatic ECCS initiation signals (LCO 3.3.1.1, "SSLC Sensor Instrumentation" and LCO 3.3.1.4, "ESF Actuation Instrumentation"), cooling and service water to cool rooms containing ECCS equipment (LCO 3.7.1, "Reactor Building Cooling Water (RCW) System, Reactor Service Water (RSW) System and Ultimate Heat Sink (UHS) – Operating")~~, LCO 3.7.2, "RCW/RSW and UHS – Shutdown" and LCO 3.7.3 "RCW/RSW and UHS – Refueling"),~~ and electrical power (LCO 3.8.1, "AC Sources – Operating," and LCO 3.8.4, "DC Sources – Operating").

SURVEILLANCE REQUIREMENTS

SR 3.5.1.9

A manual actuation of each ADS valve is performed to verify that the valve and solenoids are functioning properly and that no blockage exists in the S/RV discharge lines. This is demonstrated by the response of the turbine control or bypass valve, by a change in the measured steam flow, or by any other method suitable to verify steam flow. Adequate reactor steam dome pressure must be available to perform this test to avoid damaging the valve. Sufficient time is therefore allowed, after the required pressure is achieved, to perform this test. Adequate pressure at which this test is to be performed is [6.55 MPaG] (the pressure recommended by the valve manufacturer). Reactor startup is allowed prior to performing this test because valve OPERABILITY and the setpoints for overpressure protection are verified, per ASME requirements, prior to valve installation. Therefore, this SR is modified by a Note that states the Surveillance is not required to be performed until 12 hours after reactor steam dome pressure is [6.55 MPaG]. SR 3.5.1.8 and SRs in LCO 3.3.1.1 and LCO 3.3.1.4 overlap this Surveillance to provide complete testing of the assumed safety function.

The Frequency is based on the need to perform this Surveillance under the conditions that apply during a plant outage and the potential for an unplanned transient if the Surveillance were performed with the reactor at power. Operating experience has shown that these components usually pass the SR when performed at the 18 month Frequency, which is based on the refueling cycle. Therefore, the Frequency was concluded to be acceptable from a reliability standpoint.

[This page intentionally left blank]

B 3.5 EMERGENCY CORE COOLING SYSTEMS (ECCS)

B 3.5.2 ECCS – Shutdown

BASES

The information in this section of the reference ABWR DCD, including all subsections, is incorporated by reference with no departures, but the following site specific supplements. The site specific supplements partially address COL License Information Item 16.1.

SURVEILLANCE REQUIREMENTS

SR 3.5.2.1 and SR 3.5.2.2

The minimum water level of 7 m required for the suppression pool is periodically verified to ensure that the suppression pool will provide adequate net positive suction head (NPSH) for the ECCS pumps, recirculation volume, and vortex prevention. With the suppression pool water level less than the required limit, all ECCS injection subsystems are inoperable.

When the suppression pool level is < 7 m, the HPCF is considered OPERABLE only if it can take suction from the CST and the CST water level is sufficient to provide the required NPSH for the HPCF pump. Therefore, a verification that either the suppression pool water level is ≥ 7 m or the HPCF System is aligned to take suction from the CST and the CST contains ≥ [700,000] liters of water, equivalent to [5.4] m, ensures that the HPCF System can supply makeup water to the RPV.

The 12 hour Frequency of these SRs was developed considering operating experience related to suppression pool and CST water level variations and instrument drift during the applicable MODES. Furthermore, the 12 hour Frequency is considered adequate in view of other indications in the control room, including alarms, to alert the operator to an abnormal suppression pool or CST water level condition.

[This page intentionally left blank]

B 3.6 CONTAINMENT SYSTEMS

B 3.6.1.1 Primary Containment

BASES

The information in this section of the reference ABWR DCD, including all subsections, is incorporated by reference with the following departures and supplements. The site-specific supplements partially address COL License Information Item 16.1.

STD DEP 6.2-2
STD DEP 16.3-43
STD DEP 16.3-45

BACKGROUND

The isolation devices for the penetrations in the primary containment boundary are a part of the containment leak tight barrier. To maintain this leak tight barrier:

a. All penetrations required to be closed during accident conditions are either:

1. capable of being closed by an OPERABLE automatic Containment Isolation System, or

2. closed by manual valves, blind flanges, or de-activated automatic valves secured in their closed positions, except as provided in LCO 3.6.1.3, "Primary Containment Isolation Valves (PCIVs)";

STD DEP 16.3-43

b. The primary containment air locks are OPERABLE, except as provided in LCO 3.6.1.2, "Primary Containment Air Locks";

c. The sealing mechanism associated with a penetration (e.g., welds, bellows, or o-rings) is OPERABLE.

APPLICABLE SAFETY ANALYSES

The safety design basis for the primary containment is that it must withstand the pressures and temperatures of the limiting DBA without exceeding the design leakage rate.

The DBA that postulates the maximum release of radioactive material within primary containment is a LOCA. In the analysis of this accident, it is assumed that primary containment is OPERABLE such that release of fission products to the environment is controlled by the rate of primary containment leakage.

Analytical methods and assumptions involving the primary containment are presented in References 1 and 2. The safety analyses assume a nonmechanistic fission product release following a DBA, which forms the basis for determination of offsite doses. The fission product release is, in turn, based on an assumed leakage rate from the primary containment. OPERABILITY of the primary containment ensures that the leakage rate assumed in the safety analyses is not exceeded.

STD DEP 6.2-2

The maximum allowable leakage rate for the primary containment (La) is 0.5% by weight of the containment air per 24 hours at the ~~maximum~~ calculated *peak containment pressure (P_a) of ~~0.269 MPaG~~ ~~279.6~~* 281.8 kPaG *or ~~[~~* 0.257 *~~]~~1% by weight of the containment air per 24 hours at the reduced pressure of Pt of ~~[~~* 144.8 *~~]~~ ~~MPaG~~*kPaG *(Ref. 1).*

SURVEILLANCE REQUIREMENTS

SR 3.6.1.1.1

Maintaining the primary containment OPERABLE requires compliance with the visual examinations and leakage rate test requirements of 10 CFR 50, Appendix J (Ref. 3), as modified by approved exemptions. Failure to meet air lock leakage testing (SR 3.6.1.2.1), ~~[~~resilient seal primary containment purge valve leakage testing (SR 3.6.1.3.7),~~]~~ main steam isolation valve leakage (SR 3.6.1.3.13), or hydrostatically tested valve leakage (SR 3.6.1.3.12) does not necessarily result in a failure of this SR. The impact of the failure to meet these SRs must be evaluated against the Type A, B, and C acceptance criteria of 10 CFR 50, Appendix J. The Frequency is required by 10 CFR 50, Appendix J (Ref. 3), as modified by approved exemptions. Thus, SR 3.0.2 (which allows Frequency extensions) does not apply.

STD DEP 6.2-2

STD DEP 16.3-45

REFERENCES

1. ~~*DCD Tier 2, Section 6.2.*~~WCAP-17058, June 2009

2. *DCD Tier 2, Section ~~15.1~~*15.6.

3. *10 CFR 50, Appendix J.*

B 3.6 CONTAINMENT SYSTEMS

B 3.6.1.2 Primary Containment Air Locks

BASES

The information in this section of the reference ABWR DCD, including all subsections, is incorporated by reference with the following departures and site-specific supplement. The site-specific supplement partially addresses COL License Information Item 16.1.

STD DEP 6.2-2
STD DEP 16.3-70

BACKGROUND

The primary containment air locks form part of the primary containment pressure boundary. As such, air lock integrity and leak tightness are essential for maintaining primary containment leakage rate to within limits in the event of a DBA. Not maintaining air lock integrity or leak tightness may result in a leakage rate in excess of that assumed in the unit safety analysis. ~~SR 3.6.1.1.1~~ SR 3.6.1.2.1 *leakage rate requirements conform with 10 CFR 50, Appendix J (Ref. 2), as modified by approved exemptions.*

STD DEP 6.2-2

APPLICABLE SAFETY ANALYSES

The DBA that postulates the maximum release of radioactive material within primary containment is a LOCA. In the analysis of this accident, it is assumed that primary containment is OPERABLE, such that release of fission products to the environment is controlled by the rate of primary containment leakage. The primary containment is designed with a maximum allowable leakage rate (L_a) of 0.5%(excluding MSIV leakage) by weight of the containment air per 24 hours at the calculated maximum peak containment pressure (P_a) of ~~0.269 MPaG~~ 281.8 kPaG *(Ref. 3). This allowable leakage rate forms the basis for the acceptance criteria imposed on the SRs associated with the air lock.*

SURVEILLANCE REQUIREMENTS

SR 3.6.1.2.1

Maintaining primary containment air locks OPERABLE requires compliance with the leakage rate test requirements of 10 CFR 50, Appendix J (Ref. 2), as modified by approved exemptions. This SR reflects the leakage rate testing requirements with respect to air lock leakage (Type B leakage tests). The acceptance criteria were established ~~[~~based on the type of door seal used and will be verified during initial air lock and primary containment OPERABILITY testing~~]~~. The periodic testing requirements verify that the air lock leakage does not exceed the allowed fraction of the overall primary containment leakage rate. The Frequency is required by 10 CFR 50, Appendix J (Ref. 2), as modified by approved exemptions. Thus, SR 3.0.2 (which allows Frequency extensions) does not apply.

[This page intentionally left blank]

B 3.6 CONTAINMENT SYSTEMS

B 3.6.1.3 Primary Containment Isolation Valves (PCIVs)

BASES

The information in this section of the reference ABWR DCD, including all subsections, is incorporated by reference with the following departures and site-specific supplements. The site-specific supplements partially address COL License Information Item 16.1.

STD DEP 16.3-73
STD DEP 16.3-74

STD DEP 16.3-73

BACKGROUND

The primary containment purge lines are 550 mm in diameter; vent lines are 550 mm in diameter. The 550 mm primary containment purge valve~~s~~ are normally maintained closed in MODES 1, 2, and 3 to ensure leak tightness. The isolation valve on the 550 mm vent line~~s~~ from the drywell *ha~~ve~~*s a *50 mm bypass line around ~~them~~* it *for use during normal reactor operation. ~~Two additional redundant excess flow isolating dampers are provided on the vent line upstream of the Standby Gas Treatment (SGT) System filter trains. These isolation dampers, together with the~~*The *PCIVs~~,~~ will* close before fuel failure and *prevent high pressure from reaching the SGT System filter trains in the unlikely event of a loss of coolant accident (LOCA) during venting. ~~Closure of the excess flow isolation dampers will not prevent the SGT System from performing its design function (that is, to maintain a negative pressure in the secondary containment). To ensure that a vent path is available, a 50 mm bypass line is provided around the dampers.~~*

STD DEP 16.3-73

APPLICABLE SAFETY ANALYSES

The DBAs that result in a release of radioactive material within primary containment are a LOCA and a main steam line break (MSLB). In the analysis for each of these accidents, it is assumed that PCIVs are either closed or close within the required isolation times following event initiation. This ensures that potential leakage paths to the environment through PCIVs (and primary containment purge valves) are minimized. Of the events analyzed in Reference 1, the MSLB is the most limiting event due to radiological consequences. The closure time of the main steam isolation valves (MSIVs) is the most significant variable from a radiological standpoint. The MSIVs are required to close within 3 to 4.5 seconds; therefore, the 4.5 second closure time is assumed in the analysis. The safety analyses do not make any explicit assumptions concerning *~~assume that~~ the purge valves ~~were closed at~~ at event initiation. Likewise, it is assumed that the primary containment is isolated such that release of fission products to the environment is controlled by the rate of primary containment leakage.*

~~The DBA analysis assumes that within 60 seconds of the accident, isolation of the primary containment is complete and leakage is~~

~~terminated, except for the maximum allowable leakage, L_a. The primary containment isolation total response time of 60 seconds includes signal delay, diesel generator startup (for loss of offsite power), and PCIV stroke times.~~

The single failure criterion required to be imposed in the conduct of unit safety analyses was considered in the original design of the primary containment purge valves. Two valves in series on each purge line provide assurance that both the supply and exhaust lines could be isolated even if a single failure occurred.

~~The primary containment purge valves may be unable to close in the environment following a LOCA. Therefore, each of the purge valves is required to remain sealed closed during MODES 1, 2, and 3. In this case, the single failure criterion remains applicable to the primary containment purge valve due to failure in the control circuit associated with each valve. Again, the primary containment purge valve design precludes a single failure from compromising primary containment OPERABILITY as long as the system is operated in accordance with this LCO.~~

PCIVs satisfy Criterion 3 of the NRC Policy Statement.

LCO

STD DEP 16.3-74 *The normally closed isolation valves are considered OPERABLE when manual valves are closed, automatic valves are de-activated and secured in their closed position, blind flanges are in place, and closed systems are intact. These passive isolation valves and devices are those listed in Reference 2. Purge valves with resilient seals, ~~secondary bypass valves,~~ MSIVs, ~~EFCVs,~~ and hydrostatically tested valves must meet additional leakage rate requirements. Other PCIV leakage rates are addressed by LCO 3.6.1.1, "Primary Containment," as Type C testing.*

ACTIONS *A.1 and A.2*

STD DEP 16.3-105

With one or more penetration flow paths with one PCIV inoperable except for purge valve leakage not within limit, the affected penetration flow paths must be isolated. An analysis of the effects of flow-induced vibration on the remaining open MSIVs and other critical components in the reactor and steam systems must be performed prior to continued operation with an isolated main steamline. Continued plant operation must remain within the bounds of this analysis. *The method of isolation must include the use of at least one isolation barrier that cannot be adversely affected by a single active failure. Isolation barriers that meet this criterion are a closed and de-activated automatic valve, a closed manual valve, a blind flange, and a check valve with flow through the valve secured. For penetration isolated in accordance with Required Action A.1, the valve used to isolate the penetration should be the closest available valve to the primary containment. The Required Action must be completed within the 4 hour Completion Time (8 hours for main steamlines). The Completion Time of 4 hours is reasonable considering the time required to isolate the penetration and the relative importance of supporting primary containment OPERABILITY during MODES 1, 2, and 3. For main steamlines, an 8 hour Completion Time is allowed. The Completion Time of 8 hours for the main steamlines allows a period of time to restore the MSIVs to OPERABLE status given the fact that MSIV closure will result in isolation of the main steamline(s) and a potential for plant shutdown.*

STD DEP 16.3-74

For affected penetrations that have been isolated in accordance with Required Action A.1, the affected penetration flow path(s) must be verified to be isolated on a periodic basis. This is necessary to ensure that primary containment penetrations required to be isolated following an accident, and no longer capable of being automatically isolated, will be in the isolation position should an event occur. This Required Action does not require any testing or valve manipulation. Rather, it involves verification, through a system walkdown, that those valves outside containment and capable of potentially being mispositioned are in the correct position. The Completion Time of "once per 31 days for isolation devices outside primary containment, drywell, and steam tunnel*" is appropriate because the valves are operated under administrative controls and the probability of their misalignment is low. For valves inside primary containment, the time period specified "prior to entering MODE 2 or 3 from MODE 4, if primary containment was de-inerted while in MODE 4, if not performed within the previous 92 days" is based on engineering judgment and is considered reasonable in view of the inaccessibility of the valves and other administrative controls ensuring that valve misalignment is an unlikely possibility.*

STD DEP 16.3-74 *D.1, D.2, and D.3*

In the event one or more containment purge valves are not within the purge valve leakage limits, purge valve leakage must be restored to within limits or the affected penetration must be isolated. The method of isolation must be by the use of at least one isolation barrier that cannot be adversely affected by a single active failure. Isolation barriers that meet this criterion are a [closed and deactivated automatic valve, closed manual valve, and

ACTIONS (continued)

blind flange~~]~~. A purge valve with resilient seals utilized to satisfy Required Action D.1 must have been demonstrated to meet the leakage requirements of SR 3.6.1.3.7. The specified Completion Time is reasonable, considering that one containment purge valve remains closed (refer to the SR 3.6.1.3.1), so that a gross breach of containment does not exist.

In accordance with Required Action D.2, this penetration flow path must be verified to be isolated on a periodic basis. The periodic verification is necessary to ensure that containment penetrations required to be isolated following an accident, which are no longer capable of being automatically isolated, will be in the isolation position should an event occur. This Required Action does not require any testing or valve manipulation. Rather, it involves verification, through a system walkdown, that those isolation devices outside containment and potentially capable of being mispositioned are in the correct position.

For the isolation devices inside containment, the time period specified as "prior to entering MODE 4 from MODE 5 if not performed within the previous 92 days" is based on engineering judgment and is considered reasonable in view of the inaccessibility of the isolation devices and other administrative controls that will ensure that isolation device misalignment is an unlikely possibility.

~~[~~For the containment purge valve with resilient seal that is isolated in accordance with Required Action D.1, SR 3.6.1.3.7 must be performed at least once every ~~[~~92~~]~~ days. This provides assurance that degradation of the resilient seal is detected and confirms that the leakage rate of the containment purge valve does not increase during the time the penetration is isolated. The normal Frequency for SR 3.6.1.3.7, 184 days, is based on an NRC initiative addressing the issue of resilient seal reliability in these purge valves. Since more reliance is placed on a single valve while in this Condition, it is prudent to perform the SR more often. Therefore, a Frequency of once per ~~[~~92~~]~~ days was chosen and has been shown to be acceptable based on operating experience.~~]~~

SURVEILLANCE REQUIREMENTS

STD DEP 16.3-74

SR 3.6.1.3.9

Automatic PCIVs close on a primary containment isolation signal to prevent leakage of radioactive material from primary containment following a DBA. This SR ensures that each automatic PCIV will actuate to its isolation position on a primary containment isolation signal. The ~~LOGIC SYSTEM FUNCTIONAL TEST~~ COMPREHENSIVE FUNCTIONAL TESTs (SR 3.3.1.1.9 and SR 3.3.1.4.4) in LCO 3.3.1.1 and LCO 3.3.1.4 *~~in SR 3.3.6.3.6~~ overlap~~s~~ this SR to provide complete testing of the safety function. The 18 month Frequency was developed considering it is prudent that this Surveillance be performed only during a unit outage since isolation of penetrations would eliminate cooling water flow and disrupt the normal operation of many critical components. For some PCIVs, the Inservice Testing Program allows this surveillance to be performed during cold*

SURVEILLANCE REQUIREMENTS (continued)

shutdown, as opposed to a unit outage, provided the Frequency is no greater than 18 months. Operating experience has shown that these components usually pass this Surveillance when performed at the 18 month Frequency. Therefore, the Frequency was concluded to be acceptable from a reliability standpoint.

~~*SR 3.6.1.3.14*~~

~~*Reviewer's Note: This SR is only required for those plants with purge valves with resilient seals allowed to be open during [MODE 1, 2 or 3, or 4] and having blocking devices that are not permanently installed on the valves.*~~

~~*Verifying each 550 mm primary containment purge valve is blocked to restrict opening to £ [50]% is required to ensure that the valves can close under DBA conditions within the times assumed in the analysis of References 2 and 4.*~~

~~*[The SR is modified by a Note stating that this SR is only required to be met in MODES 1, 2, and 3.] If a LOCA occurs, the purge valves must close to maintain containment leakage within the values assumed in the accident analysis. At other times when purge valves are required to be capable of closing (e.g., during movement of irradiated fuel assemblies), pressurization concerns are not present, thus the purge valves can be fully open. The 18 month Frequency is appropriate because the blocking devices are typically removed only during a refueling outage.*~~

[This page intentionally left blank]

B 3.6 CONTAINMENT SYSTEMS

B 3.6.1.4 Drywell Pressure

BASES

The information in this section of the reference ABWR DCD, including all subsections, is incorporated by reference with the following departure.

STD DEP 6.2-2

APPLICABLE SAFETY ANALYSES

Primary containment performance is evaluated for the entire spectrum of break sizes for postulated LOCAs (Ref. 1). Among the inputs to the DBA is the initial primary containment internal pressure (Ref. 1). Analyses assume an initial drywell pressure of 5.20xI0^{-3} MPaG. This limitation ensures that the safety analysis remains valid by maintaining the expected initial conditions and ensures that the peak LOCA drywell internal pressure does not exceed the maximum allowable of 0.310 MPaG.

The maximum calculated drywell pressure occurs during ~~the reactor blowdown phase of the DBA, which is determined to be~~ a feedwater line break. The calculated peak drywell pressure for this limiting event is ~~0.269 MPaG~~ 281.8 kPaG *(Ref. 1).*

[This page intentionally left blank]

B 3.6 CONTAINMENT SYSTEMS

B 3.6.1.5 Drywell Air Temperature

BASES

The information in this section of the reference ABWR DCD, including all subsections, is incorporated by reference with no departures or supplements.

[This page intentionally left blank]

B 3.6 CONTAINMENT SYSTEMS

B 3.6.1.6 Wetwell-to-Drywell Vacuum Breakers

BASES

The information in this section of the reference ABWR DCD, including all subsections, is incorporated by reference with the following departure.

STD DEP 16.3-34

LCO

All eight of the vacuum breakers must be OPERABLE for opening. All wetwell-to-drywell vacuum breakers, however, are required to be closed (except ~~during testing or~~ when the vacuum breakers are performing the intended design function). The vacuum breaker OPERABILITY requirement provides assurance that the drywell-to-wetwell negative differential pressure remains below the design value. The requirement that the vacuum breakers be closed ensures that there is no excessive bypass leakage should a LOCA occur.

SURVEILLANCE REQUIREMENTS

SR 3.6.1.6.1

Each vacuum breaker is verified closed (except ~~when being tested in accordance with SR 3.6.1.6.2 or~~ when performing its intended function) to ensure that this potential large bypass leakage path is not present. This Surveillance is performed by observing the vacuum breaker position indication or by increasing the drywell pressure by $3.43x10^{-3}$ MPa above the wetwell pressure and verifying that the pressure differential does not fall below $2.06x10^{-3}$ MPaD for 15 minutes without makeup. This criteria was developed assuming ideal gas behavior, a leakage area corresponding to 10% of the allowable leakage area, the average temperatures in the wetwell and drywell remained within ± 0.5ºC throughout the testing interval, and that adequate instrumentation exists to measure the pressure decay. Basing the test criteria on 10% of the allowable leakage area provides a large degree of margin in demonstrating that the vacuum breakers are adequately closed and sealed. Additionally, if the allowable leakage area were to exist, a pressure differential of ~~3.45~~3.43$x10^{-3}$ MPa would decay completely within 15 minutes. Maintaining the average temperatures of the wetwell and drywell is important because the pressure differentials in this test are relatively small and can be significantly impacted by small temperature changes. (However, if temperature control is a problem, new test parameters should be developed which take into account the normal temperature variations.)

[This page intentionally left blank]

B 3.6 CONTAINMENT SYSTEMS

B 3.6.2.1 Suppression Pool Average Temperature

BASES

The information in this section of the reference ABWR DCD, including all subsections, is incorporated by reference with the following departures.

STD DEP 16.3-32
STD DEP 16.3-33

LCO

A limitation on the suppression pool average temperature is required to provide assurance that the containment conditions assumed for the safety analyses are met. This limitation subsequently ensures that peak primary containment pressures and temperatures do not exceed maximum allowable values during a postulated DBA or any transient resulting in heatup of the suppression pool. The LCO requirements are:

STD DEP 16.3-33

a. *Average temperature ≤ 35ºC when ~~THERMAL POWER is < 1% RTP~~* THERMAL POWER is > 1% RTP *and no testing that adds heat to the suppression pool is being performed. This requirement ensures that licensing bases initial conditions are met.*

b. *Average temperature ≤ 40.6ºC when ~~THERMAL POWER is < 1% RTP~~* THERMAL POWER > 1% RTP *and testing that adds heat to the suppression pool is being performed. This required value ensures that the unit has testing flexibility, and was selected to provide margin below the 43.3ºC limit at which reactor shutdown is required. When testing ends, temperature must be restored to ≤ 35ºC within 24 hours according to Required Action A.2. Therefore, the time period that the temperature is > 35ºC is short enough not to cause a significant increase in unit risk.*

ACTIONS
STD DEP 16.3-32

D.1 and D.2

When the suppression pool temperature reaches 43.3ºC a reactor scram is automatically initiated. Additionally, when suppression pool temperature is > 43.3ºC, increased monitoring of pool temperature is required to ensure that it remains ≤ 48.9ºC. The once per 30 minute Completion Time is adequate, based on operating experience. Given the high suppression pool average temperature in this Condition, the monitoring Frequency is increased to twice that of Condition A. Furthermore, the 30 minute Completion Time is considered adequate in view of other indications available in the control room, including alarms, to alert the operator to an abnormal suppression pool average temperature condition. Additionally, the plant must be brought to a

ACTIONS
(continued)

D.1 and D.2 (continued)

MODE in which the LCO does not apply. To achieve this status, the plant must be brought to at least MODE 4 within 36 hours. The allowed Completion Time is reasonable, based on operating experience, to reach the required plant condition from full power conditions in an orderly manner and without challenging plant systems.

E.1 ~~*and E.2*~~

If suppression pool average temperature cannot be maintained at ≤48.9ºC, the plant must be brought to a MODE in which the LCO does not apply. To achieve this status, the reactor pressure must be reduced to < 1.38 MPaG within 12 hours~~, and the plant must be brought to at least MODE 4 within 36 hours~~. The allowed Completion Time is reasonable, based on operating experience, to reach the required plant conditions from full power conditions in an orderly manner and without challenging plant systems.

Continued addition of heat to the suppression pool with suppression pool temperature > 48.9ºC could result in exceeding the design basis maximum allowable values for primary containment temperature or pressure. Furthermore, if a blowdown were to occur when the temperature was > 48.9ºC, the maximum allowable bulk and local temperatures could be exceeded very quickly.

B 3.6 CONTAINMENT SYSTEMS

B 3.6.2.2 Suppression Pool Water Level

BASES

The information in this section of the reference ABWR DCD, including all subsections, is incorporated by reference with no departures or supplements.

[This page intentionally left blank]

B 3.6 CONTAINMENT SYSTEMS

B 3.6.2.3 Residual Heat Removal (RHR) Suppression Pool Cooling

BASES

The information in this section of the reference ABWR DCD, including all subsections, is incorporated by reference with the following departures.

STD DEP 16.3-36
STD DEP 16.3-37

BACKGROUND
STD DEP 16.3-36

The combined heat removal capability of two RHR subsystems operating simultaneously is sufficient to meet the overall DBA pool cooling requirement for loss of coolant accidents (LOCAs) and transient events such as a turbine trip or stuck open safety/relief (S/RV). S/RV leakage and ~~high pressure core injection and~~ Reactor Core Isolation Cooling System testing increase suppression pool temperature more slowly. The RHR Suppression Pool Cooling System is also used to lower the suppression pool water bulk temperature following such events.

REFERENCES

1. *DCD Tier 2, Section 6.2.*

STD DEP 16.3-37

2. ~~*ASME, Boiler and Pressure Vessel Code, Section XI*~~ Not Used.

[This page intentionally left blank]

B 3.6 CONTAINMENT SYSTEMS

B 3.6.2.4 Residual Heat Removal (RHR) Containment Spray

BASES

The information in this section of the reference ABWR DCD, including all subsections, is incorporated by reference with no departures or supplements.

[This page intentionally left blank]

B 3.6 CONTAINMENT SYSTEMS

B 3.6.3.1 Primary Containment Hydrogen Recombiners

BASES

The information in this section of the reference ABWR DCD, including all subsections, is deleted in accordance with the following departure.

STD DEP T1 2.14-1

Not Used.

[This page intentionally left blank]

B 3.6 CONTAINMENT SYSTEMS

B 3.6.3.2 Primary Containment Oxygen Concentration

BASES

The information in this section of the reference ABWR DCD, including all subsections, is incorporated by reference with the following departure.

STD DEP T1 2.14-1

BACKGROUND

All nuclear reactors must be designed to withstand events that generate hydrogen either due to the zirconium metal water reaction in the core or due to radiolysis.

The primary method to control combustible gases is to inert the primary containment. With the primary containment inert, that is, oxygen concentration < 3.5 volume percent (v/o), a combustible mixture cannot be present in the primary containment for any hydrogen concentration. ~~The capability to inert the primary containment and maintain oxygen < 3.5 v/o works together with the hydrogen recombiners (LCO 3.6.3.1, "Primary Containment Hydrogen Recombiners") to provide redundant and diverse methods to mitigate events that produce hydrogen. For example, an event that rapidly generates hydrogen from zirconium metal water reaction will result in excessive hydrogen in primary containment, but oxygen concentration will remain < 3.5 v/o and no combustion can occur. Long term generation of both hydrogen and oxygen from radiolytic decomposition of water may eventually result in a combustible mixture in primary containment, except that the hydrogen recombiners remove hydrogen and oxygen gases faster than they can be produced from radiolysis and again no combustion can occur.~~ This LCO ensures that oxygen concentration does not exceed 3.5 v/o during operation in the applicable conditions.

APPLICABLE SAFETY ANALYSES

The Reference 1 calculations assume that the primary containment is inerted when a Design Basis Accident loss of coolant accident occurs. Thus, the hydrogen assumed to be released to the primary containment as a result of metal water reaction in the reactor core will not produce combustible gas mixtures in the primary containment.~~ Oxygen, which is subsequently generated by radiolytic decomposition of water, is recombined by the hydrogen recombiners (LCO 3.6.3.1) more rapidly than it is produced.~~

ACTIONS

A.1

If oxygen concentration is ≥3.5 v/o at any time while operating in MODE 1, with the exception of the relaxations allowed during startup and shutdown, oxygen concentration must be restored to < 3.5 v/o within 24 hours. The 24 hour Completion Time is allowed when oxygen concentration is ≥3.5 v/o because of the ~~availability of other hydrogen mitigating systems (e.g., hydrogen recombiners) and the~~ low probability of an event that would generate significant amounts of hydrogen occurring during this period.

B 3.6 CONTAINMENT SYSTEMS

B 3.6.4.1 Secondary Containment

BASES

The information in this section of the reference ABWR DCD, including all subsections, is incorporated by reference with the following departures.

STD DEP T1 16.3-29
STD DEP T1 16.3-30

APPLICABILITY

In MODES 1, 2, and 3, a LOCA could lead to a fission product release to primary containment that leaks to secondary containment. Therefore, secondary containment OPERABILITY is required during the same operating conditions that require primary containment OPERABILITY.

In MODES 4 and 5, the probability and consequences of the LOCA are reduced due to the pressure and temperature limitations in these MODES. Therefore, maintaining secondary containment OPERABLE is not required in MODE 4 or 5 to ensure a control volume, except for other situations for which significant releases of radioactive material can be postulated, such as during operations with a potential for draining the reactor vessel (OPDRVs), during CORE ALTERATIONS, or during movement of irradiated fuel assemblies in ~~the primary or~~ secondary containment.

SURVEILLANCE REQUIREMENTS *SR 3.6.4.1.4 and SR 3.6.4.1.5*

STD DEP T1 16.3-29

The SGT System exhausts the secondary containment atmosphere to the environment through appropriate treatment equipment. To ensure that all fission products are treated, SR 3.6.4.1.4 verifies that the SGT System will rapidly establish and maintain a pressure in the secondary containment that is less than the lowest postulated pressure external to the secondary containment boundary. This is confirmed by demonstrating that one SGT subsystem will draw down the secondary containment to ≥6.4 mm of water gauge vacuum in ≤~~120 seconds~~ 20 minutes. This cannot be accomplished if the secondary containment boundary is not intact. SR 3.6.4.1.5 demonstrates that one SGT subsystem can maintain ≥6.4 mm of water gauge vacuum for 1 hour at a flow rate ≤6800 m^3/h. The 1 hour test period allows secondary containment to be in thermal equilibrium at steady state conditions. Therefore, these two tests are used to ensure secondary containment boundary integrity. Since these SRs are secondary containment tests, they need not be performed with each SGT subsystem. The SGT subsystems are tested on a STAGGERED TEST BASIS, however, to ensure that in addition to the requirements of LCO 3.6.4.3, either SGT subsystem will perform this test. The 18 month Frequency is based on the need to perform this Surveillance under the conditions that apply during a plant outage and the potential for an unplanned transient if the Surveillance were performed with the reactor at power. Operating experience has shown these components usually pass the Surveillance when performed at the 18 month Frequency. Therefore, the Frequency was concluded to be acceptable from a reliability standpoint.

B 3.6 CONTAINMENT SYSTEMS

B 3.6.4.2 Secondary Containment Isolation Valves (SCIVs)

BASES

The information in this section of the reference ABWR DCD, including all subsections, is incorporated by reference with no departures or supplements.

[This page intentionally left blank]

B 3.6 CONTAINMENT SYSTEMS

B 3.6.4.3 Standby Gas Treatment (SGT) System

BASES

The information in this section of the reference ABWR DCD, including all subsections, is incorporated by reference with the following departures and site-specific supplement. The site-specific supplement partially addresses COL License Information Item 16.1.

STD DEP 16.3-31

REFERENCES

1. *10 CFR 50, Appendix A, GDC 41.*

2. *DCD Tier 2, Section ~~6.2.3~~6.5.1.*

3. *DCD Tier 2, Section 15.6.5.*

4. *DCD Tier 2, Section 15.7.4.*

5. *Regulatory Guide 1.52, Rev. ~~[2]~~.*

[This page intentionally left blank]

B 3.7 PLANT SYSTEMS

B 3.7.1 Reactor Building Cooling Water (RCW) System, Reactor Service Water (RSW) System, and Ultimate Heat Sink (UHS) – Operating

BASES

The information in this section of the reference ABWR DCD, including all subsections, is incorporated by reference with the following departure and site-specific supplements. The site-specific supplements partially address COL License Information Item 16.1.

STD DEP 16.3-16

BACKGROUND

The UHS ~~is~~ includes a dedicated water storage basin for each unit. The UHS consists of *~~[a spray pond with six spray networks. Two spray networks are assigned to each UHS division and are mechanically separated from the other divisional networks. The networks and their supply piping are suspended above the pond surface on reinforced concrete columns]~~* three mechanically and electrically independent cooling tower divisions designed to remove heat from the respective RCW/RSW division. Each unit's UHS structure consists of six cooling tower cells, of which two cells are dedicated to each of the three UHS divisions. During normal plant operation, all three divisions are in service with one cooling tower cell per division in operation. *~~The [spray pond]~~*Each unit's UHS basin *is sized such that sufficient water inventory is available for all RCW/RSW System post LOCA cooling requirements for a 30 day period with no external makeup water source available (Regulatory Guide 1.27, Ref. 1). Normal makeup for each ~~[spray pond]~~* UHS basin *is provided automatically by the ~~[power cycle heat sink makeup line]~~* onsite well water*.*

Cooling water is pumped from the ~~[spray pond]~~ UHS basin *by the RSW pump(s) to the RCW/RSW heat exchangers through the three main redundant supply headers (Divisions A, B and C). In a separate closed loop, cooling water is circulated by the pump(s) in each RCW division through the essential components to be cooled and back through the RCW/RSW heat exchangers. Thus, the heat removed from the components by the RCW is transferred to the RSW, and then ultimately rejected to the UHS.*

Divisions A, B and C supply cooling water to redundant equipment required for a safe reactor shutdown. Additional information on the design and operation of the RCW/RSW System and UHS along with the specific equipment for which the RCW/RSW System supplies cooling water is provided in Sections 9.2.11 and 9.2.15 and Tables 9.2-4A, B, and C (Refs. 2 and 3, respectively). The combined three division RCW/RSW System is designed to withstand a single active or passive failure coincident with a loss of offsite power, without losing the capability to supply adequate cooling water to equipment required for safe reactor shutdown.

Following a DBA or transient, the RCW/RSW System and UHS cooling tower fans *will operate automatically without operator action. Manual initiation of supported systems is, however, performed for some cooling operations (e.g., shutdown cooling).*

LCO

The OPERABILITY of Divisions A, B and C of the RCW/RSW System is required to ensure the effective operation of the RHR System in removing heat from the reactor, and the effective operation of other safety related equipment during a DBA or transient. Requiring all three divisions to be OPERABLE ensures that two divisions will be available to provide adequate capability to meet cooling requirements of the equipment required for safe shutdown in the event of a single failure.

A division is considered OPERABLE when:

a. All four associated RCW/RSW pumps are OPERABLE;

b. All three RCW/RSW heat exchangers are OPERABLE;

c. The associated UHS with two cooling tower cells *is OPERABLE; and*

d. The associated piping, valves, instrumentation, and controls required to perform the safety related function are OPERABLE.

OPERABILITY of the UHS is based on a maximum RSW water temperature of ~~[33.3~~ 32.2*~~]~~°C at the inlet to the RCW/RSW heat exchangers with OPERABILITY of each division requiring a minimum water level at or above elevation ~~[mean sea level (equivalent to an indicated level of ≥ [ ] m) and six OPERABLE spray networks] [~~* 23.55 *~~]~~ m MSL (equivalent to an indicated level of ~~[~~* 19.28*~~]~~ m)* and six OPERABLE cooling tower cells*. The maximum RSW water temperature of ~~[33.3~~* 32.2*~~]~~°C will insure that the peak temperature at the inlet to the RCW/RSW heat exchangers will not exceed the designed value of 35°C during a LOCA.*

The isolation of the RCW/RSW System to components or systems may render those components or systems inoperable, but does not affect the OPERABILITY of the RCW/RSW System.

ACTIONS

A.1

If one RCW pump and/or one RSW pump and/or one RCW/RSW heat exchanger and/or one ~~[spray network]~~ cooling tower cell *in the UHS in the same division is inoperable, action must be taken to restore the inoperable component(s), and thus the division affected, to OPERABLE status within 14 days. In this condition sufficient equipment is still available to provide cooling water to the required safety related components and sufficient heat removal capacity is still available to adequately cool safety related loads, even assuming the worst case single failure. Therefore, continued operation for a limited time is justified.*

B.1 and B.2

If one RCW/RSW division or both ~~[spray network]~~ cooling tower cells *in one UHS division is inoperable for reasons other than Condition A, then, immediately, those required feature(s) supported by the inoperable RCW/RSW division must be declared inoperable (e.g., Emergency Diesel Generator, RHR heat exchanger, etc.) and the applicable Conditions and Required Actions of the appropriate LCOs for the inoperable required feature(s) must be entered. For example, applicable Conditions of LCO 3.8.1, "AC Sources-Operating," LCO 3.4.7, "Residual Heat Removal (RHR) Shutdown Cooling System-Hot Shutdown," LCO 3.4.1, "Reactor Internal Pumps (RIP) Operating," LCO 3.6.1.5, "Drywell Air Temperature", LCO 3.6.2.3, "Suppression Pool Cooling," and LCO 3.6.2.4, "Containment Spray" be entered and the Required Actions taken if the inoperable RCW/RSW division results in an inoperable DG, RHR shutdown cooling, RIPS, drywell temperature increase due to inoperable drywell coolers, RHR suppression pool cooling, and RHR containment spray, respectively. This is in accordance with LCO 3.0.6 and ensures the proper actions are taken for these components.*

Additionally, immediate action must be taken to restore the inoperable RCW/RSW division or UHS ~~[spray network]~~ cooling tower cells *to OPERABLE status. This is consistent with the Required Actions of the applicable LCOs for those support feature(s) declared inoperable as a result of the inoperable RCW/RSW division.*

STD DEP 16.3-16

C.1~~ and C.2~~

If one RCW pump and/or one RSW pump and/or one RCW/RSW heat exchanger and/or one UHS ~~[spray network]~~ cooling tower cell *in the same division is inoperable in two or more separate divisions, one RCW/RSW or UHS ~~[spray network]~~* cooling tower *division must be restored to OPERABLE status within 7 days~~ and two RCW/RSW or UHS [spray network] divisions must be restored to OPERABLE status in 14 days~~. In this condition sufficient equipment is still available to provide cooling water to the required safety related components and sufficient heat removal capacity is still available to adequately cool safety related loads. Therefore, continued operation for a limited time is justified. However, in the degraded mode of this Condition, overall reliability and heat removal capability is reduced from that of Condition A, and thus a more restrictive Completion Time is imposed.*

The 7 ~~and 14~~ day Completion Time is reasonable, based on the low probability of an accident occurring during the period that one or more redundant components are inoperable in one or more divisions, the number of available redundant divisions, the substantial cooling capability still remaining in divisions in this Condition, and the expected high division availability afforded by a system where most of the equipment, including the minimum required for most functions, is normally operating. The Completion Time~~s are~~ is *also based on PRA sensitivity studies (Ref. 8).*

D.1 and D.2

If the RCW/RSW division cannot be restored to OPERABLE status within the associated Completion Time, or two or more RCW/RSW divisions are inoperable for reasons other than Condition C, or the UHS is determined inoperable, or two or more UHS ~~[spray network]~~ cooling tower *divisions are inoperable for reasons other than Condition C, the unit must be placed in a MODE in which the LCO does not apply. To achieve this status, the unit must be placed in at least MODE 3 within 12 hours and in MODE 4 within 36 hours. The allowed Completion Times are reasonable, based on operating experience, to reach the required unit conditions from full power conditions in an orderly manner and without challenging unit systems.*

SURVEILLANCE REQUIREMENTS

SR 3.7.1.1

This SR ensures adequate long term (30 days) cooling can be maintained. With the UHS water source below the minimum level, the affected RCW/RSW division must be declared inoperable. The 24 hour Frequency is based on operating experience related to trending of the parameter variations during the applicable MODES.

SURVEILLANCE REQUIREMENTS (continued)

SR 3.7.1.2

This SR verifies the water level in ~~each RSW pump well of~~ the ~~intake structure~~ UHS basin *to be sufficient for the proper operation of the RSW pumps (net positive suction head and pump vortexing are considered in determining this limit). The 24 hour Frequency is based on operating experience related to trending of the parameter variations during the applicable MODES.*

SR 3.7.1.3

Verification of the RSW water temperature at the inlet to the RCW/RSW heat exchanger ensures that the heat removal capability of the RCW/RSW System is within the assumptions of the DBA analysis. The 24 hour Frequency is based on operating experience related to trending of the parameter variations during the applicable MODES.

STD DEP 16.3-16

SR 3.7.1.4

Operating each cooling tower cell fan for ≥ 15 minutes ensures that all fans are OPERABLE and that all associated controls are functioning properly. It also ensures that fan or motor failure, or excessive vibration can be detected for corrective action. The 31 day Frequency is based on operating experience, the known reliability of the fan units, the redundancy available, and the low probability of significant degradation of the cooling tower fans occurring between Surveillances.

SR 3.7.1.~~4~~5

Verifying the correct alignment for each manual, power operated, and automatic valve in each RCW/RSW and associated UHS ~~[spray network]~~ cooling tower *division flow path provides assurance that the proper flow paths will exist for RCW/RSW operation. This SR does not apply to valves that are locked, sealed, or otherwise secured in position, since these valves were verified to be in the correct position prior to locking, sealing, or securing. A valve is also allowed to be in the nonaccident position and yet considered in the correct position, provided it can be automatically realigned to its accident position. This SR does not require any testing or valve manipulation; rather, it involves verification that those valves capable of potentially being mispositioned are in the correct position. This SR does not apply to valves that cannot be inadvertently misaligned, such as check valves.*

This SR is modified by a Note indicating that isolation of the RCW/RSW System to components or systems may render those components or systems inoperable, but does not affect the OPERABILITY of the RCW/RSW System. As such, when all RCW/RSW pumps, valves, and piping are OPERABLE, but a branch connection off of the main header is isolated, the RCW/RSW System is still OPERABLE. The 31 day Frequency is based on engineering judgment, is consistent with the procedural controls governing valve operation, and ensures correct valve positions.

SR 3.7.1.~~5~~6

This SR verifies the automatic isolation valves of the RCW/RSW System will automatically switch to the safety or emergency position to provide cooling water exclusively to the safety related equipment, and limited non-safety related equipment, during an accident event. This is demonstrated by use of an actual or simulated initiation signal. This SR also verifies the automatic start capability of the RCW/RSW pumps that are in standby and automatic valving in each of the standby RCW/RSW heat exchangers and associated UHS ~~*spray network*~~ cooling tower cell in each division. SRs in LCO 3.3.1.1 and LCO 3.3.1.4 overlap this SR to provide complete testing of the safety function.

Operating experience has shown that these components usually pass the SR when performed on the 18 month Frequency. Therefore, this Frequency is concluded to be acceptable from a reliability standpoint.

B 3.7 PLANT SYSTEMS

B 3.7.2 Reactor Building Cooling Water (RCW) System, Reactor Service Water (RSW) System and Ultimate Heat Sink (UHS) – Shutdown

BASES

The information in this section of the reference ABWR DCD, including all subsections, is incorporated by reference with the following departures and site-specific supplements. The site-specific supplements partially address COL License Information Item 16.1.

STD DEP 16.3-16
STD DEP 16.3-46

APPLICABLE SAFETY ANALYSES

The volume of water incorporated in the UHS is sized so that sufficient water inventory is available for all RCW/RSW System post LOCA cooling requirements for a 30 day period with no additional makeup water source available (Ref. 1). The ability of the RCW/RSW System to support long term cooling of the reactor or containment is assumed in evaluations of the equipment required for safe reactor shutdown presented in DCD Tier 2, Sections 9.2.11, 9.2.15, 6.2.1.1.3.3.1.4, and Chapter 15, (Refs 2, 3, and 4, respectively). The long term cooling analyses following a design basis LOCA demonstrates that only two divisions of the RCW/RSW System is required, post LOCA, to support long term cooling of the reactor or containment. To provide redundancy, a minimum of three RCW/RSW divisions are required to be OPERABLE in MODE~~S~~ 4 and MODE *5 ~~except~~ with ~~the reactor cavity to dryer/separator storage pool gate removed~~* irradiated fuel in the reactor pressure vessel *and water level ~~≥ 7.0 m~~* water level < 7.0 m *over the top of the reactor pressure vessel flange.*

The combined RCW/RSW System, together with the UHS, satisfy Criterion 3 of the NRC Policy Statement.

APPLICABILITY

In MODE 4 and MODE 5 ~~except~~ with ~~the reactor cavity to dryer/separator storage pool gate removed~~ irradiated fuel in the reactor pressure vessel *and water level ~~≥ 7.0 m~~* < *7.0 m over the top of the reactor pressure vessel flange, three divisions of the RCW/RSW System and the UHS are required to be OPERABLE to support OPERABILITY of the equipment serviced by the RCW/RSW System and UHS, and are required to be OPERABLE in these MODES.*

In MODES 1, 2, and 3, the OPERABILITY requirements of the RCW/RSW System and UHS are specified in LCO 3.7.1.

In MODE 5 with ~~the reactor cavity to dryer/separator storage pool gate removed~~ irradiated fuel in the reactor pressure vessel *and water level ≥ 7.0 m over the top of the reactor pressure vessel flange, the OPERABILITY requirements of the RCW/RSW System and UHS are specified in LCO 3.7.3, "RCW/RSW System and UHS – Refueling."*

STD DEP 16.3-16

ACTIONS

A. 1~~,~~ and *B. 1*~~*and B.2*~~

If one RCW pump and/or one RSW pump and/or one RCW/RSW heat exchanger and/or one ~~*[spray network]*~~ cooling tower cell *in the UHS in the same division is inoperable, action must be taken to restore the inoperable component(s) and thus the division affected, to OPERABLE status within 14 days. If one RCW pump and/or one RSW pump and/or one RCW/RSW heat exchanger and/or one UHS* ~~*[spray network]*~~ cooling tower cell *in the same division is inoperable in two or more separate divisions, one RCW/RSW or UHS* ~~*[spray network]*~~ cooling tower cell *division must be restored to OPERABLE status within 7 days*~~*and two RCW/RSW or UHS [spray network] cooling tower divisions must be restored to OPERABLE status in 14 days*~~*. In these conditions sufficient redundant equipment is still available to provide cooling water to the required safety related components and sufficient heat removal capacity is still available to adequately cool safety related loads. Therefore, continued operability of these divisions is justified.*

The Completion Times are reasonable, based on the low probability of an accident occurring while one or more components are inoperable in one or more divisions, the number of available divisions, the substantial cooling capability still remaining in a division(s) in this Condition, and the expected high division availability afforded by a system where most of the equipment, including the minimum required for most functions, is normally operating. However, in the degraded mode of Condition B, overall reliability and heat removal capability is reduced from that of Condition A, and thus a more restrictive Completion Time is imposed.

C.1

If the RCW/RSW or UHS ~~*[spray network]*~~ cooling tower *division(s) cannot be restored to OPERABLE status within the associated Completion Time(s), or one or more required RCW/RSW or UHS* ~~*[spray network]*~~ cooling tower *division(s) are inoperable for reasons other than Condition A or B or the UHS is inoperable, then immediately, those required feature(s) supported by the inoperable RCW/RSW division(s) or the UHS must be declared inoperable (i.e., Emergency Diesel Generator, RHR heat exchanger) and the applicable Conditions and Required Actions of the appropriate LCOs for the inoperable required feature(s) must be entered. For the applicable shutdown MODES, an inoperable RCW/RSW division or UHS requires entering the Conditions of LCO 3.8.11, "AC Sources-Shutdown (Low Water Level)," for a diesel generator made inoperable and either LCO 3.4.8, "Residual Heat Removal (RHR) Shutdown Cooling System – Cold Shutdown," or LCO 3.9.8, "Residual Heat Removal (RHR) Low Water Level" for RHR shutdown cooling made inoperable. This is in accordance with LCO 3.0.6 and ensures the proper actions are taken for these components.*

SURVEILLANCE REQUIREMENTS

SR 3.7.2.2.

This SR verifies the water level in the UHS basin ~~*each RSW pump well of the intake structure*~~ *to be sufficient for the proper operation of the RSW pumps (net positive suction head and pump vortexing are considered in determining this limit). The 24 hour Frequency is based on operating experience related to trending of the parameter variations during the applicable MODES.*

SR 3.7.2.3

Verification of the RSW water temperature at the inlet to the RCW/RSW heat exchangers ensures that the heat removal capability of the RCW/RSW System is within the assumptions of the DBA analysis. The 24 hour Frequency is based on operating experience related to trending of the parameter variations during the applicable MODES.

STD DEP 16.3-16

SR 3.7.2.4

Operating each cooling tower cell fan for ≥ 15 minutes ensures that all fans are OPERABLE and that all associated controls are functioning properly. It also ensures that fan or motor failure, or excessive vibration can be detected for corrective action. The 31 day Frequency is based on operating experience, the known reliability of the fan units, the redundancy available, and the low probability of significant degradation of the cooling tower fans occurring between Surveillances.

SR 3.7.2.~~*4*~~5

Verifying the correct alignment for each manual, power operated, and automatic valve in each RCW/RSW and associated UHS ~~*[spray network]*~~ cooling tower *division flow path provides assurance that the proper flow paths will exist for RCW/RSW operation. This SR does not apply to valves that are locked, sealed, or otherwise secured in position, since these valves were verified to be in the correct position prior to locking, sealing, or securing. A valve is also allowed to be in the nonaccident position and yet considered in the correct position, provided it can be automatically realigned to its accident position. This SR does not require any testing or valve manipulation; rather, it involves verification that those valves capable of potentially being mispositioned are in the correct position. This SR does not apply to valves that cannot be inadvertently misaligned, such as check valves.*

This SR is modified by a Note indicating that isolation of the RCW/RSW System to components or systems may render those components or systems inoperable, but does not affect the OPERABILITY of the RCW/RSW System. As such, when all RCW/RSW pumps, valves, and piping are OPERABLE, but a branch connection off the main header is isolated, the RCW/RSW System is still OPERABLE. The 31 day Frequency is based on engineering judgement, is consistent with the procedural controls governing valve operation, and ensures correct valve positions.

SURVEILLANCE REQUIREMENTS (continued)

SR 3.7.2.~~5~~6

This SR verifies that the automatic isolation valves of the RCW/RSW System will automatically switch to the safety or emergency position to provide cooling water exclusively to the safety related equipment, and limited non-safety related equipment, during an accident event. This is demonstrated by use of an actual or simulated initiation signal. This SR also verifies the automatic start capability of the RCW/RSW pumps that are in standby and automatic valving in each of the standby RCW/RSW heat exchangers and associated UHS ~~[spray network]~~ cooling tower cell*] in each division. SRs in LCO 3.3.1.1 and LCO 3.3.1.4 overlap this SR to provide complete testing of the safety function.*

Operating experience has shown that these components usually pass the SR when performed on the 18 month Frequency. Therefore, this Frequency is concluded to be acceptable from a reliability standpoint.

B 3.7 PLANT SYSTEMS

B 3.7.3 Reactor Building Cooling Water (RCW) System, Reactor Service Water (RSW) System and Ultimate Heat Sink (UHS) – Refueling

BASES

The information in this section of the reference ABWR DCD, including all subsections, is incorporated by reference with the following departures and site-specific supplements. The site-specific supplements partially address COL License Information Item 16.1.

STD DEP 16.3-16
STD DEP 16.3-46

STD DEP 16.3-46

BACKGROUND

A description of the RCW and RSW Systems and the UHS are provided in the Bases for LCO 3.7.1, "Reactor Building Cooling Water (RCW) System, Reactor Service Water (RSW) System and Ultimate Heat Sink (UHS) – Operating." In MODE 5 with irradiated fuel in the reactor pressure vessel and *the reactor vessel water level ≥ 7.0 m over the vessel flange the unit components to which the RCW/RSW System is required to supply cooling water is greatly reduced from normal operation. For example, LCO 3.8.2, "AC Sources – Refueling" and LCO 3.9.7, "RHR-High Water Level" require one DG and one RHR subsystem to be OPERABLE, respectively, and LCO 3.5.2, "ECCS-Shutdown" does not require any ECCS components to be OPERABLE for this condition.*

APPLICABLE SAFETY ANALYSES

The volume of water incorporated in the UHS is sized so that sufficient water inventory is available for all RCW/RSW System post LOCA cooling requirements for a 30 day period with no additional makeup water source available (Ref. 1). The ability of the RCW/RSW System to support long term cooling of the reactor or containment is assumed in evaluations of the equipment required for safe reactor shutdown presented in DCD Tier 2, Sections 9.2.11, 9.2.15, 6.2.1.1.3.3.1.4, and Chapter 15, (Refs 2, 3, and 4, respectively). With the unit in MODE 5 ~~*and*~~ *with* irradiated fuel in the reactor pressure vessel ~~*the reactor cavity to dryer/separator storage gate removed*~~ *and water level ≥ 7.0 m over the top of the reactor pressure vessel flange, the volume of water in the reactor vessel provides a heat sink for decay heat removal. However, to provide redundancy, a minimum of one RCW/RSW division is required to be OPERABLE.*

The combined RCW/RSW System, together with the UHS, satisfies Criterion 3 of the NRC Policy Statement.

LCO

One division of the RCW/RSW System and the UHS are required to be OPERABLE to ensure the effective operation of the RHR System in removing heat from the reactor. LCO 3.9.7, "RHR – High Water Level" requires that one RHR subsystem be OPERABLE and in operation in MODE 5 with irradiated fuel in the reactor pressure vessel *and with the water level ≥ 7.0 m above the RPV flange. Only one subsystem is required because the volume of water above the RPV flange provides backup decay heat removal capability. Operability of the UHS and the RCW/RSW System is defined in the Basis for LCO 3.7.1.*

APPLICABILITY

In MODE 5 with irradiated fuel in the reactor pressure vessel ~~*the reactor cavity to dryer/separator storage gate removed*~~ *and water level ≥ 7.0 m over the top of the reactor pressure vessel flange, one division of the RCW/RSW System and the UHS are required to be OPERABLE to support OPERABILITY of the equipment serviced by the RCW/RSW System and UHS, and are required to be OPERABLE in this MODE.*

In MODES 1, 2, and 3, the OPERABILITY requirements of the RCW/RSW System and UHS are specified in LCO 3.7.1.

in MODE 4 and MODE 5 ~~*except with the reactor cavity to dryer/separator storage pool gate removed and*~~ with ~~*water level ≥ 7.0 m*~~ water level < 7.0 m over the top of the reactor pressure vessel flange, the OPERABILITY requirements of the RCW/RSW System and UHS are specified in LCO 3.7.2, "RCW/RSW System and UHS – Shutdown."

ACTIONS

A. 1. and A. 2

If no RCW/RSW division is operable or the UHS is inoperable, or the associated ~~*divisional*~~ *UHS* ~~*[spray networks]*~~ cooling tower cells *are inoperable, then, immediately, those required feature(s) supported by the inoperable required RCW/RSW division or UHS must be declared inoperable (i.e., Emergency Diesel Generator, RHR heat exchanger) and the applicable Conditions and Required Actions of the appropriate LCOs for the inoperable required feature(s) must be entered. An inoperable RCW/RSW division or UHS requires entering the Conditions of LCO 3.8.2, "AC Sources – Refueling," for a diesel generator made inoperable and LCO 3.9.7, "Residual Heat Removal (RHR) – High Water Level" for RHR shutdown cooling made inoperable. This is in accordance with LCO 3.0.6 and ensures the proper actions are taken for these components.*

SURVEILLANCE REQUIREMENTS

SR 3.7.3.2

This SR verifies the water level in the UHS basin ~~*each RSW pump well of the intake structure*~~ *to be sufficient for the proper operation of the RSW pumps (net positive suction head and pump vortexing are considered in determining this limit). The 24 hour Frequency is based on operating experience related to trending of the parameter variations during the applicable MODES.*

SR 3.7.3.3

Verification of the RSW water temperature at the inlet to the RCW/RSW heat exchangers ensures that the heat removal capability of the RCW/RSW System is within the assumptions of the DBA analysis. The 24 hour Frequency is based on operating experience related to trending of the parameter variations during the applicable MODES.

STD DEP 16.3-16

SR 3.7.3.4

Operating each cooling tower cell fan for ≥ 15 minutes ensures that all fans are OPERABLE and that all associated controls are functioning properly. It also ensures that fan or motor failure, or excessive vibration can be detected for corrective action. The 31 day Frequency is based on operating experience, the known reliability of the fan units, the redundancy available, and the low probability of significant degradation of the cooling tower fans occurring between Surveillances.

SR 3.7.3.~~*4*~~5

Verifying the correct alignment for each manual, power operated, and automatic valve in each RCW/RSW and associated UHS ~~*[spray networks]*~~ cooling tower *division flow path provides assurance that the proper flow paths will exist for RCW/RSW operation. This SR does not apply to valves that are locked, sealed, or otherwise secured in position, since these valves were verified to be in the correct position prior to locking, sealing, or securing. A valve is also allowed to be in the nonaccident position and yet considered in the correct position, provided it can be automatically realigned to its accident position. This SR does not require any testing or valve manipulation; rather, it involves verification that those valves capable of potentially being mispositioned are in the correct position. This SR does not apply to valves that cannot be inadvertently misaligned, such as check valves.*

This SR is modified by a Note indicating that isolation of the RCW/RSW System to components or systems may render those components or systems inoperable, but does not affect the OPERABILITY of the RCW/RSW System. As such, when all RCW/RSW pumps, valves, and piping are OPERABLE, but a branch connection off the main header is isolated, the RCW/RSW System is still OPERABLE.

The 31 day Frequency is based on engineering judgement, is consistent with the procedural controls governing valve operation, and ensures correct valve positions.

SURVEILLANCE REQUIREMENTS (continued)

SR 3.7.3.~~5~~6

This SR verifies that the automatic isolation valves of the RCW/RSW System will automatically switch to the safety or emergency position to provide cooling water exclusively to the safety related equipment, and limited non-safety related equipment, during an accident event. This is demonstrated by use of an actual or simulated initiation signal. This SR also verifies the automatic start capability of the RCW/RSW pumps that are in standby and automatic valving in each of the standby RCW/RSW heat exchangers and associated UHS ~~[spray networks~~ cooling tower cell*~~]~~ in each division. ~~The LOGIC SYSTEM FUNCTIONAL TEST in SR 3.3.5.1.4~~* The COMPREHENSIVE FUNCTIONAL TESTs (SR 3.3.1.1.9 and SR 3.3.1.4.4) in LCO 3.3.1.1 and LCO 3.3.1.4 *overlap this SR to provide complete testing of the safety function.*

Operating experience has shown that these components usually pass the SR when performed on the 18 month Frequency. Therefore, this Frequency is concluded to be acceptable from a reliability standpoint.

B 3.7 PLANT SYSTEMS

B 3.7.4 Control Room Habitability Area (CRHA) – Emergency Filtration (EF) System

BASES

The information in this section of the reference ABWR DCD, including all subsections, is incorporated by reference with the following departures.

STD DEP 16.3-47
STD DEP 16.3-48

BACKGROUND
STD DEP 16.3-48

The Emergency Filtration System of the CRHA HVAC System, provides a radiologically controlled environment from which the unit can be safely operated following a Design Basis Accident (DBA).

The safety related function of the Emergency Filtration System used to control radiation exposure consists of two independent and redundant high efficiency air filtration divisions for treatment of a mixture of recirculated air and a minimum of outside air supplied for pressurization of the main control area envelope (MCAE). Each division consists of an electric heater, a prefilter, a high efficiency particulate air (HEPA) filter, an activated charcoal adsorber section, a second HEPA filter, ~~a fan~~ two 100% capacity fans, and the associated ductwork and dampers. The electric heater limits the relative humidity of the influent air stream to less than 70% relative humidity. Prefilters and HEPA filters remove particulate matter that may be radioactive. The charcoal adsorbers provide a holdup period for gaseous iodine, allowing time for decay. The second HEPA filter collects any carbon fines exhausted from the adsorber.

LCO

Two redundant divisions of the Emergency Filtration System are required to be OPERABLE to ensure that at least one is available, assuming a single failure disables the other division. Total system failure could result in exceeding a dose of 0.05 Sv to the control room operators in the event of a DBA.

The Emergency Filtration System is considered OPERABLE when the individual components necessary to control operator exposure are OPERABLE in both divisions. A division is considered OPERABLE when its associated:

a. Fan is OPERABLE (one of the two fans);

b. HEPA filter and charcoal adsorber are not excessively restricting flow and are capable of performing their filtration functions; and

c. Heater, ductwork, valves, and dampers are OPERABLE, and air circulation can be maintained.

STD DEP 16.3-47

SURVEILLANCE REQUIREMENTS

SR 3.7.4.4

This SR verifies the integrity of the MCAE and the assumed inleakage rates of potentially contaminated air. The control room positive pressure, with respect to potentially contaminated adjacent spaces, is periodically tested to verify proper function of the Emergency Filtration System. During the emergency mode of operation, the Emergency Filtration System is designed to slightly pressurize the control room to ≥ 3.2 mm water gauge positive pressure with respect to the atmosphere to prevent unfiltered inleakage. The Emergency Filtration System is designed to maintain this positive pressure at a flow rate of ≤ ~~360~~3400 m^3/h @ 0.101 MPa, 0ºC to the MCAE in the emergency filtration mode. The Frequency of 18 months on a STAGGERED TEST BASIS is consistent with industry practice and other filtration system SRs.

B 3.7 PLANT SYSTEMS

B 3.7.5 Control Room Habitability Area (CRHA) – Air Conditioning (AC) System

BASES

The information in this section of the reference ABWR DCD, including all subsections, is incorporated by reference with the following departure.

STD DEP 16.3-76

SURVEILLANCE REQUIREMENTS

SR 3.7.5.2

This SR verifies that each CRHA AC division starts and operates on a low flow signal from the operating Emergency Filtration Unit. The LOGIC SYSTEM FUNCTIONAL TEST in SR 3.3.7.1.4 overlaps this SR to provide complete testing of the safety function. The 18 month Frequency is appropriate since significant degradation of the CRHA AC System is not expected over this time period.

[This page intentionally left blank]

B 3.7 PLANT SYSTEMS

B 3.7.6 Main Condenser Offgas

BASES

The information in this section of the reference ABWR DCD, including all subsections, is incorporated by reference with the following departure.

STD DEP 16.3-75

BACKGROUND

During unit operation, steam from the low pressure turbine is exhausted directly into the condenser. Air and noncondensible gases are collected in the condenser, then exhausted through the steam jet air ejectors (SJAEs) to the Main Condenser Offgas System. The offgas from the main condenser normally includes radioactive gases.

The Main Condenser Offgas System has been incorporated into the unit design to reduce the gaseous radwaste emission. This system uses a catalytic recombiner to recombine radiolytically dissociated hydrogen and oxygen. The gaseous mixture is cooled by the offgas condenser; the water and condensibles are stripped out by the offgas condenser and moisture separator. The radioactivity of the remaining gaseous mixture (i.e., the offgas recombiner effluent) is monitored downstream of the moisture separator prior to entering the ~~holdup line~~ charcoal adsorber vault*.*

[This page intentionally left blank]

B 3.7 PLANT SYSTEMS

B 3.7.7 Main Turbine Bypass System

BASES

The information in this section of the reference ABWR DCD, including all subsections, is incorporated by reference with the following site-specific supplement. The site specific supplement partially addresses COL License Information Item 16.1.

SURVEILLANCE REQUIREMENTS

SR 3.7.7.3

This SR ensures that the TURBINE BYPASS SYSTEM RESPONSE TIME is in compliance with the assumptions of the appropriate safety analysis. The response time limits are specified in [~~unit specific~~ FSAR Section 1.1.3]. The 18 month Frequency is based on the need to perform this Surveillance under the conditions that apply during a unit outage and because of the potential for an unplanned transient if the Surveillance were performed with the reactor at power. Operating experience has shown the 18 month Frequency, which i s based on the refueling cycle, is acceptable from a reliability standpoint and is also based on a reliability analysis in Reference 3.

REFERENCES

1. *DCD Tier 2, Section 7.7.1.8.*

2. *DCD Tier 2, Chapter 15.*

3. *Letter, Jack Fox to Chet Poslusny, "Submittal Supporting Accelerated ABWR Review Schedule-Revised LC0 3.7.5", Docket No. STN 52-001, May 19, 1993.*

[This page intentionally left blank]

B 3.7 PLANT SYSTEMS

B 3.7.8 Fuel Pool Water Level

BASES

The information in this section of the reference ABWR DCD, including all subsections, is incorporated by reference with no departures or supplements.

[This page intentionally left blank]

B 3.8 ELECTRICAL POWER SYSTEMS

B 3.8.1 AC Sources – Operating

BASES

The information in this section of the reference ABWR DCD, including all subsections, is incorporated by reference with the following departures.

STD DEP 8.3-1 (All)

STD DEP 16.3-80

BACKGROUND

The Class 1E AC distribution system supplies electrical power to three divisional load groups, with each division powered by an independent Class 1E ~~6.9~~4.16 kV ESF bus (refer to LCO 3.8.9, "Distribution Systems – Operating"). Each ESF bus has two separate and independent preferred (offsite) sources of power and a dedicated onsite DG. Each ESF bus is also connectable to a combustion turbine generator (CTG). The ESF systems of any two of the three divisions provide for the minimum safety functions necessary to shut down the unit and maintain it in a safe shutdown condition.

Offsite power is supplied to each of the ~~6.9~~4.16 kV ESF buses from the transmission network via two electrically and physically separated circuits. In addition, the CTG may be substituted for the second (delay access) offsite source to any one ESF bus (for a limited duration) when the first (immediate access) offsite source to the ESF bus is from ~~the~~ a reserve auxiliary transformer while the unit auxiliary transformer associated with the ESF bus is out of service. The CTG may also be substituted for the second (delay access) offsite source for the three ESF buses (for a limited duration) when the first (immediate access) offsite source to each of the ESF buses is from its associated unit auxiliary transformer while the reserve auxiliary transformers (associated with the three ESF buses) ~~is~~ are out of service. These offsite AC electrical power circuits are designed and located so as to minimize to the extent practicable the likelihood of their simultaneous failure under operating and postulated accident and environmental conditions. A detailed description of the offsite power system and circuits to the onsite Class 1E ESF buses is found in DCD Tier 2, Chapter 8 (Ref. 2).

The onsite standby power source for each ~~6.9~~4.16 kV ESF bus is a dedicated DG. A DG starts automatically on loss of coolant accident (LOCA) signal (i.e., signal generated from low reactor water level and high drywell pressure that are arranged in two-out-of four logic combinations) or on an ESF bus undervoltage signal (refer to LCO 3.3.1.4, "ESF Actuation Instrumentation"). In addition, power can be supplied to any one ESF from the CTG (for a limited duration) when a DG is inoperable.

Ratings for DGs satisfy the requirements of Regulatory Guide 1.9 (Ref. 3). The continuous service rating for each DG is ~~5000~~7200 kW @ 0.8 power

factor, with 10% overload permissible for up to 2 hours in any 24 hour period.

APPLICABLE SAFETY ANALYSES, LCO AND APPLICABILITY

AC sources satisfy the requirements of Criterion 3 of the NRC Policy Statement. In addition, the CTG may be substituted for the second (delay access) offsite source to any one ESF bus when the first (immediate access) offsite source is from ~~the~~ a reserve auxiliary transformer while the unit auxiliary transformer associated with the ESF bus is out of service. The CTG may also be substituted for the second (delay access) offsite source for the three ESF buses (for a limited duration) when the first (immediate access) offsite source to each of the ESF buses is from its associated unit auxiliary transformers while the reserve auxiliary transformers (associated with the three ESF buses) ~~is~~ are out of service. The CTG may also be used to substitute (for a limited time) for an inoperable DG. With this substitution, the AC electrical power sources are designed to provide sufficient capacity, capability, redundancy, and reliability to ensure the availability of necessary power to ESF systems so that the fuel, Reactor Coolant System (RCS), and containment design limits are not exceeded.

LCO

Two qualified offsite circuits between the offsite transmission network and the onsite Class 1E Distribution System that consists of three separate and independent divisions (Divisions I, II, and III) each backed by its own dedicated and independent DG, ensure availability of the required power to shut down the reactor and maintain it in a safe shutdown condition after an anticipated operational occurrence (AOO) or a postulated DBA. In addition, the CTG may be utilized as a temporary substitution for the second (delayed access) qualified offsite circuit when the first (immediate access) qualified offsite circuit to any one ESF bus (immediate access) offsite source is from ~~the~~ a reserve auxiliary transformer while the unit auxiliary transformer associated with the ESF bus is out of service. With this temporary substitution, the two qualified offsite circuits between the offsite transmission network and the onsite Class 1E Distribution System that consists of three separate and independent divisions (Divisions I, II, and III) each backed by its own dedicated and independent DG, also ensure availability of the required power to shutdown the reactor and maintain it in a safe condition after an anticipated operational occurrence (AOO) or a postulated DBA.

Each offsite circuit must be capable of maintaining rated frequency and voltage, and accepting required loads within the assumed load sequence intervals during an accident, while connected to the ESF buses. The normal preferred circuit consists of the switching station breaker to the main transformer, the generator breaker, the disconnect links to the unit auxiliary transformers, and the circuit path from the offsite transmission network to all of the ~~6.9~~4.16 kV ESF buses including feeder breakers at the ~~6.9~~4.16 kV ESF buses. The alternate preferred circuit consists of the switching station breakers to the reserve auxiliary transformers and the circuit path from the offsite transmission network to all of the ~~6.9~~4.16 kV ESF buses including feeder breakers at the ~~6.9~~4.16 kV ESF buses.

The CTG, when used as a temporary substitute for the second offsite source or for an inoperable DG to any one ESF bus, must be capable of starting, accelerating to required speed and voltage, and of being manually

configured to provide power to the ESF bus. This sequence must be accomplished ~~within 2~~ in less than 10 *minutes. The CTG must also be capable of accepting required loads, must be capable of maintaining rated frequency and voltage, and accepting required loads when connected to the ESF bus.* The 10-minute starting time takes into account the capacity and capability of the remaining AC sources, reasonable time for startup of the CTG, and the low probability of a DBA occurring during this period.

ACTIONS

A.1, A.2, A.3, and A.4

If Condition A is entered, Required Action A.4 allows 30 days to restore the inoperable offsite power source to one ESF bus to OPERABLE status provided:

a. The ESF bus with ~~its associated unit auxiliary transformer~~ one of its offsite power sources *inoperable is verified to be energized from the offsite transmission network through ~~the reserve auxiliary transformer~~* its other offsite power source *initially within 72 hours, and once per 8 hours thereafter,*

B.3, B.4, and B.5

*Should the CTG no longer be functional or capable of being aligned to a ~~6.9~~*4.16 *kV AC ESF bus subsequent to the 72-hour period following initial entry into Condition B, Condition G again applies and Required Actions G.1 and G.2 must be followed. Anytime the 8-hour Completion Time of Required Action B.4 is not met during this extension period, Condition G must be entered. Condition G can then only be exited by restoring the offsite circuit to OPERABLE status.*

The CTG is considered functional when the requirements of DCD Tier 2, Section 9.5.13.19 are satisfied and the CTG is verified to start and achieves steady state voltage ≥[~~6210~~ 12.42*] kV and ≤[~~7590~~* 15.18*] kV, and frequency ≥[58.8] Hz and ≤[61.2] Hz ~~within 2~~* in less than 10 *minutes.*

C.4, C.5, and C.6

The CTG is considered functional when the requirements of DCD Tier 2, Section 9.5.13.19 are satisfied and the CTG is verified to start from standby conditions and achieves steady state voltage ≥[~~6210~~ 12.42*] kV and ≤[~~7590~~* 15.18*] kV, and frequency ≥[58.8] Hz and ≤[61.2] Hz ~~within 2~~* in less than 10 *minutes.*

STD DEP 16.3-80

The 15-day Completion Time provides a limit on the time allowed in a specified condition after discovery of failure to meet the LCO. This limit is considered reasonable for situations in which Conditions B and C are entered ~~D.1 and D.2~~ concurrently. The "AND" connector between the 14-day and 15-day Completion Times means that both Completion Times apply simultaneously, and the more restrictive must be met.

ACTIONS (continued)

As in Required Action C.2, the 15-day Completion Time of Required Action C.5 allows for an exception to the normal "time zero" for beginning the allowed outage time "clock." This exception results in establishing the "time zero" at the time the LCO was initially not met, instead of the time Condition C was entered.

D.1 and D.2

Required Action D.1 addresses actions to be taken in the event of concurrent failure of redundant required features. Required Action D.1 reduces the vulnerability to a loss of function. The Completion Time for taking these actions is reduced to 12 hours from that allowed with only one division without offsite power (Required Action B.2).

E.1 and E.2

The CTG is considered functional when the requirements of DCD Tier 2, Section 9.5.13.19 are satisfied and the CTG is verified to start from standby conditions and achieves steady state voltage ≥[~~6210~~ 12.42] kV and ≤[~~7590~~ 15.18] kV, and frequency ≥[58.8] Hz and ≤[61.2] Hz ~~within 2~~ in less than 10 minutes.

The once-per-8-hour Completion Time of Required Action E.2 is necessary to keep a check on the proper alignment of the CTG's circuit breakers and thus the capability of supplying power from the CTG to the ~~6.9 kV essential AC~~ 4.16 kV ESF bus associated with the inoperable DG.

F.1

If Condition F is entered, Required Action F.3 allows 72 hours to restore one DG to OPERABLE status provided the CTG is verified functional through testing within 2 hours, and its circuit breakers are aligned to one affected ~~6.9~~4.16 kV ESF bus associated with an inoperable DG and capable of being aligned to the other ~~6.9~~4.16 kV ESF bus associated with an inoperable DG, initially within 2 hours and verified once per 8 hours thereafter. This 2 hour Completion Time is reasonable because of the reliability and convenience of the CTG, the capability of the remaining AC sources, reasonable time for repairs, and the low probability of a DBA occurring during this time period.

The CTG is considered functional when the requirements of DCD Tier 2, Section 9.5.13.19 are satisfied and the CTG is verified to start from standby conditions and achieves steady state voltage ≥[~~6210~~ 12.42] kV and ≤[7590 15.18] kV, and frequency ≥[58.8] Hz and ≤[61.2] Hz ~~within 2~~ in less than 10 minutes.

SURVEILLANCE REQUIREMENTS

Where the SRs discussed herein specify voltage and frequency tolerances, the following summary is applicable. The minimum steady state output voltage of ~~6210~~ 3744 V is 90% of the nominal ~~6.9~~ 4.16 kV output voltage. This value, which is specified in ANSI C84.1 (Ref. 10), allows for voltage drop to the terminals of ~~6600~~ 4000 V motors whose minimum operating voltage is specified as 90%, or ~~5980~~ 3600 V. It also allows for voltage drops to motors and other equipment down through the ~~200~~ 120 V level where minimum operating voltage is also usually specified as 90% of name plate rating. The specified maximum steady state output voltage of ~~7590~~ 4576 V is equal to the maximum operating voltage specified for ~~6600~~ 4000 V motors plus voltage drop from the source to the loads. It ensures that for a lightly loaded distribution system, the voltage at the terminals of ~~6600~~ 4000 V motors is no more than the maximum rated operating voltages. The specified minimum and maximum frequencies of the DG are 58.8 Hz and 61.2 Hz, respectively. These values are equal to ± 2% of the 60 Hz nominal frequency and are derived from the recommendations given in Regulatory Guide 1.9 (Ref. 3).

SR 3.8.1.8

Manual transfer of each ~~6.9~~ 4.16 kV ESF bus power supply from the normal offsite circuit to the alternate offsite circuit demonstrates the OPERABILITY of the alternate circuit distribution network to power the shutdown loads. The manual transfer should be performed using the DG to carry the loads (i.e., not a dead bus transfer). The 18 month Frequency of the Surveillance is based on engineering judgment taking into consideration the plant conditions required to perform the Surveillance, and is intended to be consistent with expected fuel cycle lengths. Operating experience has shown that these components usually pass the SR when performed on the 18 month Frequency. Therefore, the Frequency was concluded to be acceptable from a reliability standpoint.

SR 3.8.1.9

Each DG is provided with an engine overspeed trip to prevent damage to the engine. Recovery from the transient caused by the loss of a large load could cause diesel engine overspeed, which, if excessive, might result in a trip of the engine. This Surveillance demonstrates the DG load response characteristics and capability to reject the largest single load without exceeding predetermined voltage and frequency and while maintaining a specified margin to the overspeed trip. The load referenced for Division II and Division III DGs is the ~~1400~~ 1689 kW high pressure core flooder (HPCF) pump; for the Division I DG, the ~~540~~ 589 kW residual heat removal (RHR) pump. The ~~Reactor Building Cooling Water (RCW)~~ Reactor Service Water (RSW) system load was not used. Even though the load to DG I is ~~640~~ 1060 kW, that value consists of 2 ~~RCW~~ RSW pumps of ~~320~~ 530 kW each. As required by IEEE-308 (Ref. 12), the load rejection test is acceptable if the increase in diesel speed does not exceed 75% of the difference between synchronous speed and the overspeed trip setpoint, or 15% above synchronous speed, whichever is lower.

SURVEILLANCE REQUIREMENTS (Continued)

~~*Reviewer's Note: The above MODE restrictions may be deleted if it can be demonstrated to the staff, on a plant specific basis, that performing the SR with the reactor in any of the restricted MODES can satisfy the following criteria, as applicable:*~~

~~*a. Performance of the SR will not render any safety system or component inoperable;*~~

~~*b. Performance of the SR will not cause perturbations to any of the electrical distribution systems that could result in a challenge to steady state operation or to plant safety systems; and*~~

~~*c. Performance of the SR, or failure of the SR, will not cause, or result in, an A00 with attendant challenge to plant safety systems.*~~

SR 3.8.1.10

~~*Reviewer's Note: The above MODE restrictions may be deleted if it can be demonstrated to the staff, on a plant specific basis, that performing the SR with the reactor in any of the restricted MODES can satisfy the following criteria, as applicable:*~~

~~*a. Performance of the SR will not render any safety system or component inoperable;*~~

~~*b. Performance of the SR will not cause perturbations to any of the electrical distribution systems that could result in a challenge to steady state operation or to plant safety systems; and*~~

~~*c. Performance of the SR, or failure of the SR, will not cause, or result in , an A00 with attendant challenge to plant safety systems.*~~

SURVEILLANCE REQUIREMENTS (Continued)

SR 3.8.1.13

~~*Reviewer's Note: The above MODE restrictions may be deleted if it can be demonstrated to the staff, on a plant specific basis, that performing the SR with the reactor in any of the restricted MODES can satisfy the following criteria, as applicable*~~

~~*a. Performance of the SR will not render any safety system or component inoperable;*~~

~~*b. Performance of the SR will not cause perturbations to any of the electrical distribution systems that could result in a challenge to steady state operation or to plant safety systems; and*~~

~~*c. Performance of the SR, or failure of the SR, will not cause, or result in, an A00 with attendant challenge to plant safety systems.*~~

SR 3.8.1.18

~~*Reviewer's Note: The above MODE restrictions may be deleted if it can be demonstrated to the staff, on a plant specific basis, that performing the SR with the reactor in any of the restricted MODES can satisfy the following criteria, as applicable*~~

~~*a. Performance of the SR will not render any safety system or component inoperable;*~~

~~*b. Performance of the SR will not cause perturbations to any of the electrical distribution systems that could result in a challenge to steady state operation or to plant safety systems; and*~~

~~*c. Performance of the SR, or failure of the SR, will not cause, or result in, an AOO with attendant challenge to plant safety systems.*~~

[This page intentionally left blank]

B 3.8 ELECTRICAL POWER SYSTEMS

B 3.8.2 AC Sources – Refueling

BASES

The information in this section of the reference ABWR DCD, including all subsections, is incorporated by reference with the following departures.

STD DEP 8.3-1
STD DEP 16.3-40

LCO (continued)

The qualified offsite circuit must be capable of maintaining rated frequency and voltage while connected to ESF bus(es), and of accepting required loads during an accident. The qualified offsite circuit is either the normal or alternate preferred power circuits to AC Electric Power Distribution System that are described in DCD Tier 2, Chapter 8 and are part of the licensing basis for the plant. The normal preferred circuit consists of the switching stations breaker to the main transformers, the generator breaker, the disconnect links to the unit auxiliary transformers, and the circuit path from the offsite transmission network to all of the ~~6.9~~ 4.16 kV ESF buses required by LC0 3.8.10 including feeder breakers at the ~~6.9~~ 4.16 kV ESF buses. The alternate preferred circuit consists of the switching station breakers to the reserve transformers and the circuit path from the offsite transmission network to all of the ~~6.9~~ 4.16 kV ESF buses required by LC0 3.8.10 including feeder breakers at the ~~6.9~~ 4.16 kV ESF buses.

STD DEP 8.3-1

STD DEP 16.3-40

Each required DG must be capable of starting, accelerating to required speed and voltage, and connecting to its respective ESF bus on detection of bus undervoltage, and accepting required loads. This sequence must be accomplished within 20 seconds. Each DG must also be capable of accepting required loads within the assumed loading sequence intervals, and must continue to operate until offsite power can be restored to the ESF buses. These capabilities are required to be met from a variety of initial conditions such as: DG in standby with the engine hot, DG in standby with engine at ambient conditions, and DG operating in *parallel test mode.*

[This page intentionally left blank]

B 3.8 ELECTRICAL POWER SYSTEMS

B 3.8.3 Diesel Fuel Oil, Lube Oil, and Starting Air Subsystem

BASES

The information in this section of the reference ABWR DCD, including all subsections, is incorporated by reference with the following departure and supplements. The site-specific supplements partially address COL License Information Item 16.1.

STD DEP 16.3-51

BACKGROUND

Each DG has ~~an~~ redundant *air start* sub*system*s, each *with adequate capacity for five successive start attempts on the DG without recharging the air start receiver(s).* One subsystem with an OPERABLE air start receiver satisfies OPERABILITY requirements for its associated DG.

LCO

The starting air system is required to have a minimum capacity for five successive DG start attempts without recharging the air start receivers. One subsystem with an OPERABLE air start receiver satisfies OPERABILITY requirements for its associated DG.

ACTIONS

B.1

With lube oil inventory < ~~[~~ 7,300 ~~]~~ liters, sufficient lube oil to support 7 days of continuous DG operation at full load conditions may not be available. However, the Condition is restricted to lube oil volume reductions that maintain at least a 6 day supply. This restriction allows sufficient time for obtaining the requisite replacement volume. A period of 48 hours is considered sufficient to complete restoration of the required volume prior to declaring the DG inoperable. This period is acceptable based on the remaining capacity (> 6 days), the low rate of usage, the fact that procedures will be initiated to obtain replenishment, and the low probability of an event during this brief period.

E.1

With starting air receiver pressure < ~~[~~ 3,000 ~~]~~ kPaG, sufficient capacity for five successive DG start attempts does not exist. However, as long as the receiver pressure is > ~~[~~ 2,700 ~~]~~ kPaG, there is adequate capacity for at least one start attempt, and the DG can be considered OPERABLE while the air receiver pressure is restored to the required limit. A period of 48 hours is considered sufficient to complete restoration to the required pressure prior to declaring the DG inoperable. This period is acceptable based on the remaining air start capacity, the fact that most DG starts are accomplished on the first attempt, and the low probability of an event during this brief period.

SURVEILLANCE REQUIREMENTS

SR 3.8.3.2

This Surveillance ensures that sufficient lube oil inventory is available to support at least 7 days of full load operation for each DG. The [7,300] liter requirement is based on the DG manufacturer's consumption values for the run time of the DG. Implicit in this SR is the requirement to verify the capability to transfer the lube oil from its storage location to the DG when the DG lube oil sump does not hold adequate inventory for 7 days of full load operation without the level reaching the manufacturer's recommended minimum level.

A 31 day Frequency is adequate to ensure that a sufficient lube oil supply is onsite, since DG starts and run times are closely monitored by the plant staff.

SR 3.8.3.3

The tests listed below are a means of determining whether new fuel oil is of the appropriate grade and has not been contaminated with substances that would have an immediate detrimental impact on diesel engine combustion and operation. If results from these tests are within acceptable limits, the fuel oil may be added to the storage tanks without concern for contaminating the entire volume of fuel oil in the storage tanks. These tests are to be conducted prior to adding the new fuel to the storage tank(s), but in no case is the time between receipt of new fuel and conducting the tests to exceed 31 days. The tests, limits, and applicable ASTM Standards are as follows:

a. Sample the new fuel oil in accordance with ASTM D4057-[06] (Ref. 6);

b. Verify in accordance with the tests specified in ASTM D975-[09] (Ref. 6) that the sample has an absolute specific gravity at [15.6/15.6°C of ≥0.83° and ≤0.89° (or an API gravity at 15.6°C of ≥27° and ≤39°), a kinematic viscosity at 40°C of ≥1.9 mm^2/s and ≤4.1 mm^2/s, and a flash point of ≥51.7°C]; and

c. Verify that the new fuel oil has a clear and bright appearance with proper color when tested in accordance with ASTM D4176-[04e1] (Ref. 6).

SURVEILLANCE REQUIREMENTS (continued)

SR 3.8.3.3 (continued)

Failure to meet any of the above limits is cause for rejecting the new fuel oil, but does not represent a failure to meet the LCO since the fuel oil is not added to the storage tanks.

Within 31 days following the initial new fuel oil sample, the fuel oil is analyzed to establish that the other properties specified in Table 1 of ASTM D975-[09] (Ref. 6) are met for new fuel oil when tested in accordance with ASTM D975-[09] (Ref. 6), except that the analysis for sulfur may be performed in accordance with ASTM D1552-[08] (Ref. 6) or ASTM D2622-[08] (Ref. 6). The 31 day period is acceptable because the fuel oil properties of interest, even if not within stated limits, would not have an immediate effect on DG operation. This Surveillance ensures the availability of high quality fuel oil for the DGs.

Fuel oil degradation during long term storage shows up as an increase in particulate, mostly due to oxidation. The presence of particulate does not mean that the fuel oil will not burn properly in a diesel engine. However, the particulate can cause fouling of filters and fuel oil injection equipment, which can cause engine failure.

Particulate concentrations should be determined in accordance with ASTM D2276-[06], Method A (Ref. 6). This method involves a gravimetric determination of total particulate concentration in the fuel oil and has a limit of 10 milligrams/liter. It is acceptable to obtain a field sample for subsequent laboratory testing in lieu of field testing.

The Frequency of this Surveillance takes into consideration fuel oil degradation trends indicating that particulate concentration is unlikely to change between Frequency intervals.

REFERENCES

6. ASTM Standards: D4057-[06]; D975-[09]; D4176-[04e1]; D1552-[08]; D2622-[08]; D2276-[06].

[This page intentionally left blank]

B 3.8 ELECTRICAL POWER SYSTEMS

B 3.8.4 DC Sources – Operating

BASES

The information in this section of the reference ABWR DCD, including all subsections, is incorporated by reference with the following departures.

STD DEP T1 3.4-1
STD DEP 8.3-1
STD DEP 16.3-42

STD DEP 16.3-97

STD DEP 8.3-1

LCO

The four DC electrical power subsystems are required to be OPERABLE to ensure the availability of the required power to shut down the reactor and maintain it in a safe condition after an anticipated operational occurrence (AOO) or a postulated DBA. Loss of any DC electrical power subsystem does not prevent the minimum safety function from being performed (Ref. 4). Each subsystem (or Division) consists of one battery, one battery charger, and the corresponding control equipment and interconnecting cabling within the subsystem.

The CTG, when used as a temporary substitute for a DC electrical power subsystem, must be capable of starting, accelerating to required speed and voltage, and of being manually configured to provide power to the ESF bus. This sequence must be accomplished in less than 10 minutes. The CTG must also be capable of accepting required loads and maintaining rated frequency and voltage when connected to the ESF bus. The 10-minute starting time takes into account the capacity and capability of the remaining AC sources, reasonable time for startup of the CTG, and the low probability of a DBA occurring during this period.

STD DEP T1 3.4-1

ACTIONS

B.1 and B.2

In Condition B, Division IV DC electrical power subsystem is inoperable. Required Actions B.1 allows 2 hours to declare affected required features inoperable so that appropriate actions are implemented in accordance with the affected required features of the LCOs' ACTIONS. Division IV is less critical than the other three DC electrical power subsystems because of its limited role in actuating safety related functions (i.e., ~~Essential Multiplex System~~ Data Communication Function *Div. IV, SSLC Div. IV sensor logic). Division IV does not feed or control any major mechanical components or systems.*

STD DEP 16.3-42 *D.1 and D.2*

~~*If all inoperable DC electrical power subsystems cannot be restored to OPERABLE status within the associated Completion Times for Required Actions A.1, B.2, and C.1 or C.2, the unit must be brought to a MODE in which the LCO does not apply.*~~ The unit must be brought to a MODE in which the LCO does not apply if any Required Action of Condition A or B is not met within its associated Completion Time, or if Condition C is not met within its associated Completion Time, while a DC electrical power subsystem remains inoperable. *To achieve this status, the plant must be brought to at least MODE 3 within 12 hours and to MODE 4 within 36 hours. The allowed Completion Times are reasonable, based on operating experience, to reach the required plant conditions from full power conditions in an orderly manner and without challenging plant systems. The Completion Time to bring the unit to MODE 4 is consistent with the time required in Regulatory Guide 1.93 (Ref. 7).*

STD DEP 16.3-97

SURVEILLANCE REQUIREMENTS

SR 3.8.4.2

Visual inspection to detect corrosion of the battery cells and connections, or measurement of the resistance of each inter-cell, inter-rack, inter-tier, and terminal connection, provides an indication of physical damage or abnormal deterioration that could potentially degrade battery performance.

The limits established for this SR must be no more than 20% above the resistance as measured during installation, or not above the ceiling value established by the manufacturer.

The Surveillance Frequency for these inspections, which can detect conditions that can cause power losses due to resistance heating, is 92 days. This Frequency is considered acceptable based on operating experience related to detecting corrosion trends.

B 3.8 ELECTRICAL POWER SYSTEMS

B 3.8.5 DC Sources – Shutdown

BASES

The information in this section of the reference ABWR DCD, including all subsections, is incorporated by reference with no departures or supplements.

[This page intentionally left blank]

B 3.8 ELECTRICAL POWER SYSTEMS

B 3.8.6 Battery Cell Parameters

BASES

The information in this section of the reference ABWR DCD, including all subsections, is incorporated by reference with the following site-specific supplements. The site-specific supplements partially address COL License Information Item 16.1.

SURVEILLANCE REQUIREMENTS

SR 3.8.6.2

The quarterly inspection of specific gravity and voltage is consistent with IEEE-450 (Ref. 3). In addition, within 24 hours of a battery discharge < [110] V or a battery overcharge > [140] V, the battery must be demonstrated to meet Category B limits. This inspection is also consistent with IEEE-450 (Ref. 3), which recommends special inspections following a severe discharge or overcharge, to ensure that no significant degradation of the battery has occurred as a consequence of such discharge or overcharge.

Table 3.8.6-1

The Category A limit specified for specific gravity for each pilot cell is ≥ [1.195] (0.015 below the manufacturer's fully charged nominal specific gravity or a battery charging current that had stabilized at a low value). This value is characteristic of a charged cell with adequate capacity. According to IEEE-450 (Ref. 3), the specific gravity readings are based on a temperature of 25°C.

Because of specific gravity gradients that are produced within cells during the recharging process, delays of several days may occur while waiting for the specific gravity to stabilize. A stabilized charger current is an acceptable alternative to specific gravity measurement for determining the state of charge of the battery. This phenomenon is discussed in IEEE-450 (Ref. 3). Footnote c to Table 3.8.6-1 allows the float charge current to be used as an alternate to specific gravity for up to [7] days following a battery recharge.

Category B defines the normal parameter limits for each connected cell. The term "connected cell" excludes any battery cell that may be jumpered out.

The Category B limits specified for electrolyte level and float voltage are the same as those specified for Category A and have been discussed above. The Category B limit specified for specific gravity for each connected cell is ≥ [1.190] (0.020 below the manufacturer's fully charged, nominal specific gravity) with the average of all connected cells > [1.200] (0.010 below the manufacturer's fully charged, nominal specific gravity). These are based on manufacturer's recommendations. The minimum specific gravity value required for each cell ensures that the effects of a highly charged or newly installed

SURVEILLANCE REQUIREMENTS (continued)

cell do not mask overall degradation of the battery. Footnote b to Table 3.8.6-1 requires correction of specific gravity for electrolyte temperature and level.

Category C defines the limits for each connected cell. These values, although reduced, provide assurance that sufficient capacity exists to perform the intended function and maintain a margin of safety. When any battery parameter is outside the Category C limit, the assurance of sufficient capacity described above no longer exists, and the battery must be declared inoperable.

The Category C limit specified for electrolyte level (above the top of the plates and not overflowing) ensure that the plates suffer no physical damage and maintain adequate electron transfer capability. The Category C limit for float voltage is based on IEEE-450 (Ref. 3), which states that a cell voltage of 2.07 V or below, under float conditions and not caused by elevated temperature of the cell, indicates internal cell problems and may require cell replacement.

The Category C limit for average specific gravity (≥[1.190]), is based on manufacturer's recommendations (0.020 below the manufacturer's recommended fully charged, nominal specific gravity). In addition to that limit, it is required that the specific gravity for each connected cell must be no less than 0.020 below the average of all connected cells. This limit ensures that the effect of a highly charged or new cell does not mask overall degradation of the battery. The footnotes to Table 3.8.6-1 that apply to specific gravity are applicable to Category A, B, and C specific gravity.

B 3.8 ELECTRICAL POWER SYSTEMS

B 3.8.7 Inverters – Operating

BASES

The information in this section of the reference ABWR DCD, including all subsections, is incorporated by reference with the following departure.

STD DEP 8.3-1

LCO (continued)

> *Maintaining the required inverters OPERABLE ensures that the redundancy incorporated into the design of the RPS, MSIV logic and controls, NMS, and PRM is maintained. Each of the four inverters has a 125 V battery backup power source to ensure an uninterruptible supply of AC electrical power to the AC vital buses even if the ~~6.9~~ 4.16 kV and 480 V safety buses are de-energized.*

[This page intentionally left blank]

B 3.8 ELECTRICAL POWER SYSTEMS

B 3.8.8 Inverters – Shutdown

BASES

The information in this section of the reference ABWR DCD, including all subsections, is incorporated by reference with the following departures.

STD DEP 8.3-1
STD DEP 16.3-52

APPLICABLE SAFETY ANALYSES
STD DEP 16.3-52

The initial conditions of Design Basis Accident (DBA) and transient accident analyses in DCD Tier 2, Chapter 6 (Ref. 1) and Chapter 15 (Ref. 2), assume Engineered Safety Feature systems are OPERABLE. The inverters are designed to provide the required capacity, capability, redundancy, and reliability to ensure the availability of necessary power to the ~~Reactor Protection System (RPS) and Emergency Core Cooling Systems (ECCS) instrumentation and controls~~ Class 1E CVCF *loads so that the fuel, Reactor Coolant System, and containment design limits are not exceeded.*

LCO

The inverters ensure the availability of AC electrical power for the ~~RPS and ECCS instrumentation and controls~~ Class 1E CVCF loads *required to shut down the reactor and maintain it in a safe condition after an anticipated operational occurrence or postulated DBA.*

STD DEP 8.3-1

Maintaining the required inverter(s) OPERABLE ensures the availability of sufficient inverter power sources to operate the plant in a safe manner and to mitigate the consequences of postulated events during shutdown (e.g., fuel handling accidents and inadvertent reactor vessel drain down). Each inverter has a 125 V battery backup power source to ensure an uninterruptible supply of AC electrical power to the AC vital buses even if the ~~9.6~~ 4.16 *kV safety buses are de-energized.*

[This page intentionally left blank]

B 3.8 ELECTRICAL POWER SYSTEMS

B 3.8.9 Distribution Systems – Operating

BASES

The information in this section of the reference ABWR DCD, including all subsections, is incorporated by reference with the following departures.

STP DEP T1 2.12-2 (Table B 3.8.9-1)
STD DEP 8.3-1 (All)
STD DEP 8.3-3 (Table B 3.8.9-1)

BACKGROUND

The primary AC distribution system consists of each ~~6.9~~ 4.16 kV Engineered Safety Feature (ESF) bus that has two separate and independent offsite sources of power, as well as a dedicated onsite diesel generator (DG) source. Each ~~6.9~~ 4.16 kV ESF bus is normally connected to a preferred source. If all offsite sources are unavailable, the onsite emergency DGs supply power to the ~~6.9~~ 4.16 kV ESF buses. Control power for the ~~6.9~~ 4.16 kV breakers is supplied from the Class 1E batteries. Additional description of this system may be found in the Bases for LCO 3.8.1, "AC Sources – Operating," and the Bases for LCO 3.8.4, "DC Sources – Operating."

The secondary plant AC distribution system includes 480 V ESF load centers and associated loads, motor control centers, and transformers. Each 480 V AC MCC is powered from its divisional ~~6.9~~ 4.16 kV ESF Bus via a ~~6.9~~ 4.16 kV/480 V transformer.

The 120 V AC vital buses A10, B10, C10, and D10 (Divisions I, II, III, and IV respectively) are arranged in four load groups and are normally powered from a divisional 480 V AC motor control center (MCC) via a rectifier, an inverter, and a static switch. Divisions I, II, and III are normally powered from Division I, II, and III 480 V AC MCCs, respectively. Division IV is normally powered from a Division II 480 V AC MCC since there is no fourth division of 480 V AC. However, each of the four DC electrical power distribution subsystems (including Division IV) is backed up by its own battery bank and will automatically supply power (via the inverter) in the event of low voltage output from the rectifier (which would occur, for example, if the 480 V AC divisional power is lost). The Bases for LCO 3.8.7, "Inverters – Operating," describe the use of the four DC subsystems. In the event of an inoperable inverter, an alternate power supply for each 120 V AC vital bus is a divisional Class 1E 480 V/120 V bypass transformer powered from its divisional 480 V AC MCC; again, with no fourth division of 480 V AC, the alternate power supply to the Division IV 120 V AC bus is a Division II 480 V AC MCC.

The RPS/MSIV logic and control in each of the four divisions use redundant power supplies, AC vital and AC instrument power. The 120 V AC instrumentation power buses A10/A20, B10/B20, C10/C20, and D10/D20 (Divisions I, II, III, and IV respectively) are arranged in four

load groups and are normally powered from a divisional 480 VAC motor control center (MCC) via a divisional Class 1E 480 V/120 V transformer powered from its divisional 480 V AC MCC; again, with no fourth division of 480 V AC, the alternate power supply to the Division IV 120 V AC bus is a Division II 480 V AC MCC.

LCO

OPERABLE AC, DC, and AC vital bus electrical power distribution subsystems require the associated buses (listed in Table B 3.8.9-1) to be energized to their proper voltages. With the exception of a special set of manual interlocks through the spare battery chargers, there are no tie breakers between redundant safety related AC, DC, and AC vital bus power distribution subsystems. This prevents any electrical malfunction in any power distribution subsystem from propagating to a redundant subsystem, which could cause the failure of the redundant subsystem and a loss of essential safety function(s). It does not, however, preclude redundant Class 1E ~~6.9~~ 4.16 kV buses from being powered from the same offsite circuit.

The CTG, when used as a temporary substitute for an electrical power distribution subsystem, must be capable of starting, accelerating to required speed and voltage, and of being manually configured to provide power to the ESF bus. This sequence must be accomplished in less than 10 minutes. The CTG must also be capable of accepting required loads and maintaining rated frequency and voltage when connected to the ESF bus. The 10-minute starting time takes into account the capacity and capability of the remaining AC sources, reasonable time for startup of the CTG, and the low probability of a DBA occurring during this period.

Table B 3.8.9-1 (page 1 of 1)
AC, DC, and AC Vital Bus Electrical Power Distribution System

SYSTEM	BUS TYPE AND VOLTAGE	DIVISION 1*	DIVISION 2*	DIVISION 3*	DIVISION 4*
AC Buses	ESF Bus ~~*6900*~~ **4.16 k**V	M/C ~~*E*~~ **A3**	M/C ~~*F*~~ **B3**	M/C ~~*G*~~ **C3**	Not Applicable
	Power Center 480 V	P/C E10 P/C E20	P/C F10 P/C F20	P/C G10 P/C G20	
	Motor Control Center 480 V	~~*C/B*~~ **MCC** E110 ~~*C/B*~~ **MCC** E111 ~~*C/B*~~ **MCC** E112 ~~*C/B*~~ **MCC** E113 **MCC E114** ~~*C/B*~~ **MCC** E120 **MCC E121** ~~*C/B*~~ **MCC**E260	~~*C/B*~~ **MCC** F110 ~~*C/B*~~ **MCC** F111 ~~*C/B*~~ **MCC** F112 ~~*C/B*~~ **MCC** F113 **MCC F114** ~~*C/B*~~ **MCC** F120 **MCC F121** ~~*C/B*~~ **MCC** F260	~~*C/B*~~ **MCC** G110 ~~*C/B*~~ **MCC** G111 ~~*C/B*~~ **MCC** ~~*G112*~~ ~~*C/B*~~ **MCC** ~~*G113*~~ ~~*C/B*~~ **MCC** G120 **MCC G121** ~~*C/B*~~ **MCC** G260	
	Distribution Panel 120 V	IP A10 IP A20	IP B10 IP B20	IP C10 IP C20	**IP D10***** **IP D20*****
AC Vital Buses	CONSTANT VOLTAGE, CONSTANT FREQUENCY DISTRIBUTION PANEL 120 V	A11 A21	B11 B21	C11 C~~*12*~~ **21**	D11*** D~~*12*~~ **21*****

*** *The normal power source for the Division 4 AC vital* and AC instrument power *bus subsystems is a Division 2 480 V AC motor control center*.

[This page intentionally left blank]

B 3.8 ELECTRICAL POWER SYSTEMS

B 3.8.10 Distribution Systems – Shutdown

BASES

The information in this section of the reference ABWR DCD, including all subsections, is incorporated by reference with no departures or supplements.

[This page intentionally left blank]

B 3.8 ELECTRICAL POWER SYSTEMS

B 3.8.11 AC Sources – Shutdown (Low Water Level)

BASES

The information in this section of the reference ABWR DCD, including all subsections, is incorporated by reference with the following departure and site-specific supplements. The site-specific supplements partially address COL License Information Item 16.1.

STD DEP 8.3-1

LCO

The qualified offsite circuit must be capable of maintaining rated frequency and voltage while connected to ESF buses, and of accepting required loads during an accident. The qualified offsite circuit is either the normal or alternate preferred power circuits to the AC Electric Power Distribution System that are described in DCD Tier 2, Chapter 8 and are part of the licensing basis for the plant. The normal preferred circuit consists of the switching stations breaker to the main transformers, the generator breaker, the disconnect links to the unit auxiliary transformers, and the circuit path from the offsite transmission network to all of the ~~9.6~~ 4.16 kV ESF buses required by LCO 3.8.10 including feeder breakers at the ~~9.6~~ 4.16 kV ESF buses. The alternate preferred circuit consists of the switching station breakers to the reserve transformers and the circuit path from the offsite transmission network to all of the ~~9.6~~ 4.16 kV ESF buses required by LCO 3.8.10 including feeder breakers at the ~~9.6~~ 4.16 kV ESF buses.

Each required DG must be capable of starting, accelerating to required speed and voltage, and connecting to its respective ESF bus on detection of bus undervoltage, and accepting required loads. This sequence must be accomplished within 20 seconds. Each DG must also be capable of accepting required loads within the assumed loading sequence intervals, and must continue to operate until offsite power can be restored to the ESF buses. These capabilities are required to be met from a variety of initial conditions such as: DG in standby with the engine hot, DG in standby with the engine at ambient conditions, and DG operating in parallel test mode.

Proper sequencing of loads, including tripping of nonessential loads, is a required function for DG OPERABILITY.

The CTG, when used as a temporary substitute for a required DG, must be capable of starting, accelerating to required speed and voltage, and of being manually configured to provide power to the ESF bus. This sequence must be accomplished in less than 10 minutes. The CTG must also be capable of accepting required loads and maintaining rated frequency and voltage when connected to the ESF bus. The 10-minute starting time takes into account the capacity and capability of the remaining AC sources, reasonable time for startup of the CTG, and the low probability of a DBA occurring during this period.

ACTIONS

B.1, B.2, and B.3

The CTG is considered functional when the requirements of DCD Tier 2, Section 9.5.13.19 are satisfied and the CTG is verified to start from standby conditions and achieves steady state voltage ≥ ~~[6210~~ 12.42~~]~~ kV and ≤ ~~[7590~~ 15.18~~]~~ kV, and frequency ≥ ~~[~~58.8~~]~~ Hz and ≤ ~~[~~61.2~~]~~ Hz ~~within 2~~ in less than 10 minutes.

B 3.9 REFUELING OPERATIONS

B 3.9.1 Refueling Equipment Interlocks

BASES

The information in this section of the reference ABWR DCD, including all subsections, is incorporated by reference with the following departure.

STD DEP 16.3-25

BACKGROUND

Two channels of instrumentation are provided to sense the position of the refueling machine, the loading of the refueling machine main hoist, and the full insertion of all control rods. With the reactor mode switch in the shutdown or refueling position, the indicated conditions are combined in logic circuits to determine if all restrictions on refueling equipment operations and control rod insertion are satisfied.

LCO

To prevent criticality during refueling, the refueling interlocks associated with the reactor mode switch refuel position *ensure that fuel assemblies are not loaded with any control rod withdrawn.*

To prevent these conditions from developing, the all-rods-in, the refueling machine position, and the refueling machine main hoist fuel loaded inputs are required to be OPERABLE when the reactor mode switch is in the refuel position*. These inputs are combined in logic circuits that provide refueling equipment or control rod blocks to prevent operations that could result in criticality during refueling operations.*

APPLICABILITY

In MODE 5, a prompt reactivity excursion could cause fuel damage and subsequent release of radioactive material to the environment. The refueling equipment interlocks protect against prompt reactivity excursions during MODE 5. The interlocks are only required to be OPERABLE during in-vessel fuel movement with refueling equipment associated with the interlocks when the reactor mode switch is in the refuel position. The interlocks are not required to be OPERABLE when the reactor mode switch is in the shutdown position since a control rod block ensures that control rod withdrawal cannot occur simultaneously with in-vessel fuel movements*.*

In MODES 1, 2, 3, and 4, the reactor pressure vessel head is on, and no fuel loading activities are possible. Therefore, the refueling interlocks are not required to be OPERABLE in these MODES.

[This page intentionally left blank]

B 3.9 REFUELING OPERATIONS

B 3.9.2 Refuel Position Rod-Out Interlock

BASES

The information in this section of the reference ABWR DCD, including all subsections, is incorporated by reference with the following departure.

STD DEP 16.3-14

APPLICABILITY

In MODE 5, with the reactor mode switch in the refuel position, the OPERABLE refuel position rod-out interlock provides protection against prompt reactivity excursions.

In MODES 1, 2, 3, and 4, the refuel position rod-out interlock is not required to be OPERABLE and is bypassed. In MODES 1 and 2, the Reactor Protection System (LCOs 3.3.1.1 and 3.3.1.2) and the control rods (LCO ~~3.1.2~~ 3.1.3) provide mitigation of potential reactivity excursions. In MODES 3 and 4, with the reactor mode switch in the shutdown position, a control rod block (LCO 3.3.5.1) ensures all control rods are inserted, thereby preventing criticality during shutdown conditions.

[This page intentionally left blank]

B 3.9 REFUELING OPERATIONS

B 3.9.3 Control Rod Position

BASES

The information in this section of the reference ABWR DCD, including all subsections, is incorporated by reference with the following departure.

STD DEP 7.7-18

BACKGROUND

Control rods provide the capability to maintain the reactor subcritical under all conditions and to limit the potential amount and rate of reactivity increase caused by a malfunction in the Control Rod Drive System. During refueling, movement of control rods is limited by the refueling interlocks (LCO 3.9.1 and LCO 3.9.2) or the control rod block with the reactor mode switch in the shutdown position (LCO 3.3.5.1).

GDC 26 of 10 CFR 50, Appendix A, requires that one of the two required independent reactivity control systems be capable of holding the reactor core subcritical under cold conditions (Ref. 1). The control rods serve as the system capable of maintaining the reactor subcritical in cold conditions.

The refueling interlocks and the RCIS GANG/SINGLE selection switch allow a single control rod to be withdrawn at any time unless fuel is being loaded into the core. However, during refueling, the RCIS ~~"Rod Test Switch"~~ is placed in the scram test mode which *allows two control rods to be withdrawn for scram testing. To preclude loading fuel assemblies into the core with a control rod withdrawn, all control rods must be fully inserted. This prevents the reactor from achieving criticality during refueling operations.*

[This page intentionally left blank]

B 3.9 REFUELING OPERATIONS

B 3.9.4 Control Rod Position Indication

BASES

The information in this section of the reference ABWR DCD, including all subsections, is incorporated by reference with the following departure.

STD DEP 7.7-10

ACTIONS

A.1.1, A.1.2, A.1.3, A.2.1, and A.2.2

Under these conditions, an inoperable full-in channel may be bypassed to allow refueling operations to proceed. An alternate method must be used to ensure the control rod is fully inserted (e.g., use the 0% position indication). Another option is to bypass Synchro A ~~(which is the current position probe) and use~~ or Synchro B so that the OPERABLE synchro providing rod position data to both channels of the RCIS is used*. If the readings of the two Synchros do not agree, the conditions will be alarmed to the operator to initiate bypass ~~of Synchro A and to use Synchro B~~.*

SURVEILLANCE REQUIREMENTS

SR 3.9.4.1

The full-in position indication channels provide input to the rod-out interlock and other refueling interlocks that require an all-rods-in permissive. The interlocks are activated when the full-in position indication for any control rod is not present, since this indicates that all rods are not fully inserted. Therefore, testing of the full-in position indication channels is performed to ensure that when a control rod is withdrawn, the full-in position indication is not present. Performing the SR each time a control rod is withdrawn is considered adequate because of the procedural controls on control rod withdrawals and the visual ~~and audible~~ indications available in the control room to alert the operator to control rods not fully inserted.

[This page intentionally left blank]

B 3.9 REFUELING OPERATIONS

B 3.9.5 Control Rod OPERABILITY – Refueling

BASES

The information in this section of the reference ABWR DCD, including all subsections, is incorporated by reference with the following departure.

STD DEP 16.3-97

LCO *Each withdrawn control rod must be OPERABLE. The withdrawn control rod is considered OPERABLE if the scram accumulator pressure is ≥ 12.75 MPaG and the control rod is capable of being automatically inserted upon receipt of a scram signal. Inserted control rods have already completed their reactivity control function.*

[This page intentionally left blank]

B 3.9 REFUELING OPERATIONS

B 3.9.6 Reactor Pressure Vessel (RPV) Water Level

BASES

The information in this section of the reference ABWR DCD, including all subsections, is incorporated by reference with the following departure.

STD DEP 16.3-35

BACKGROUND

The movement of fuel assemblies or handling of control rods within the RPV requires a minimum water level of 7.0 m above the top of the RPV flange. Sufficient water is necessary to retain iodine fission product activity in the water in the event of a fuel handling accident (Refs. 3.9.6-1 and 3.9.6-2). Sufficient iodine activity would be retained to limit offsite doses from the accident to ~~<~~ ≦ 25% of 10 CFR 100 limits, as provided by the guidance of Reference 3.

APPLICABLE SAFETY ANALYSES

During movement of fuel assemblies or handling of control rods, the water level in the RPV and the spent fuel pool is an initial condition design parameter in the analysis of a fuel handling accident in containment postulated by Regulatory Guide 1.25 (Ref. 1). A minimum water level of 7.0 m allows a decontamination factor of 100 (Ref. ~~4~~1) to be used in the accident analysis for iodine. This relates to the assumption that 99% of the total iodine released from the pellet to cladding gap of all the ~~dropped~~ damaged fuel assembly rods is retained by the refueling cavity water. The fuel pellet to cladding gap is assumed to contain 10% of the total fuel rod iodine inventory (Ref. 1).

Analysis of the fuel handling accident inside containment is described in Reference 2. With a minimum water level of 7.0 m and a minimum decay time of 24 hours prior to fuel handling, the analysis and test programs demonstrate that the iodine release due to a postulated fuel handling accident is adequately captured by the water, and that offsite doses are maintained within allowable limits (Ref. ~~5~~4).

APPLICABILITY

LCO 3.9.6 is applicable when moving fuel assemblies or handling control rods (i.e., movement with other than the normal control rod drive) within the RPV. The LCO minimizes the possibility of a fuel handling accident in containment that is beyond the assumptions of the safety analysis.If irradiated fuel is not present within the RPV, there can be no significant radioactivity release as a result of a postulated fuel handling accident. Requirements for fuel handling accidents in the spent fuel storage pool are covered by LCO 3.7.~~6~~8, "Fuel Pool Water Level."

BASES

REFERENCES

1. *Regulatory Guide 1.25, March 23, 1972.*

2. *DCD Tier 2, Section 15.7.4.*

3. *NUREG-0800, Section 15.7.4.*

~~4. *4. NUREG-0831, Supplement 6, Section 16.4.2.*~~

~~5~~4. *10 CFR 100.11.*

B 3.9 REFUELING OPERATIONS

B 3.9.7 Residual Heat Removal (RHR) – High Water Level

BASES

The information in this section of the reference ABWR DCD, including all subsections, is incorporated by reference with the following departure.

STD DEP 16.3-9

ACTIONS *A.1*

STD DEP 16.3-9 *Alternate decay heat removal methods are available to the operators for review and preplanning in the unit's Operating Procedures. For example, in addition to the three RHR shutdown cooling loops, this may include the use of the* Fuel Pool Cooling and Cleanup (FPC) System or the *Reactor Water Cleanup System, operating with the regenerative heat exchanger bypassed. The method used to remove the decay heat should be the most prudent choice based on unit conditions.*

[This page intentionally left blank]

B 3.9 REFUELING OPERATIONS

B 3.9.8 Residual Heat Removal (RHR) - Low Water Level

BASES

The information in this section of the reference ABWR DCD, including all subsections, is incorporated by reference with the following departures.

STD DEP 16.3-9
STD DEP 16.3-13

LCO

STD DEP 16.3-13

In MODE 5 with irradiated fuel in the reactor pressure vessel and with *the water level < 7.0 m above the reactor pressure vessel (RPV) flange two RHR shutdown cooling subsystems must be OPERABLE.*

An OPERABLE RHR shutdown cooling subsystem consists of an RHR pump, a heat exchanger, valves, piping, instruments, and controls to ensure an OPERABLE flow path.

ACTIONS

A.1

STD DEP 16.3-9

Alternate decay heat removal methods are available to the operators for review and preplanning in the unit's Operating Procedures. For example, in addition to the third RHR shutdown cooling loop, this may include the use of the Fuel Pool Cooling and Cleanup (FPC) System or the *Reactor Water Cleanup System, operating with the regenerative heat exchanger bypassed. The method used to remove decay heat should be the most prudent choice based on unit conditions.*

B.1, B.2, B.3, C.1, and C.2

If no RHR shutdown cooling subsystem is in operation, an alternate method of coolant circulation is required to be established within 1 hour. The Completion Time is modified such that the 1 hour is applicable separately for each occurrence involving a loss of coolant circulation.

During the period when the reactor coolant is being circulated by an alternate method (other than by the required RHR Shutdown Cooling System), the reactor coolant temperature and level must be periodically monitored to ensure proper function of the alternate method. The once per hour Completion Time is deemed appropriate.

STD DEP 16.3-13

~~*If at least one RHR subsystem is not restored to OPERABLE status immediately,*~~ With the required shutdown cooling subsystem(s) inoperable and the required alternate method(s) of decay heat removal not available in accordance with Required Action A.1, *additional actions are required to minimize any potential fission product release to the environment. This includes initiating immediate action to restore the following to OPERABLE status: secondary containment, one standby gas treatment subsystem, and one secondary containment isolation valve and associated instrumentation in each associated penetration*

not isolated. This may be performed as an administrative check, by examining logs or other information to determine whether the components are out of service for maintenance or other reasons. It is not necessary to perform the surveillances needed to demonstrate the OPERABILITY of the components. If, however, any required component is inoperable, then it must be restored to OPERABLE status. In this case, the surveillance may need to be performed to restore the component to OPERABLE status. Actions must continue until all required components are OPERABLE.

B 3.10 SPECIAL OPERATIONS

B 3.10.1 Inservice Leak and Hydrostatic Testing Operation

BASES

The information in this section of the reference ABWR DCD, including all subsections, is incorporated by reference with the following departure.

STD DEP 16.3-28

REFERENCES

1. *American Society of Mechanical Engineers, Boiler and Pressure Vessel Code, Section XI.*

2. *DCD Tier 2, Section ~~15.1~~* 15.6.4.

[This page intentionally left blank]

B 3.10 SPECIAL OPERATIONS

B 3.10.2 Reactor Mode Switch Interlock Testing

BASES

The information in this section of the reference ABWR DCD, including all subsections, is incorporated by reference with the following departures.

STD DEP 16.3-26
STD DEP 16.3-27

BACKGROUND

The purpose of this Special Operations LCO is to permit operation of the reactor mode switch from one position to another to confirm certain aspects of associated interlocks during periodic tests and calibrations in MODES 3, 4, and 5.

STD DEP16.3-26

The reactor mode switch is a conveniently located, multiposition, keylock switch provided to select the necessary scram functions for various plant conditions (Ref. 1). The reactor mode switch selects the appropriate trip logic for scram functions and provides appropriate bypasses. The mode switch positions and related scram interlock functions are summarized as follows:

a. *Shutdown – Initiates a reactor scram;* selects average power range monitor (APRM) neutron flux setdown, startup range neutron monitor (SRNM) high flux and neutron flux short period scrams*; bypasses main steam line isolation* ~~*and reactor high water level*~~ turbine control valve fast closure, and turbine stop valve closure *scrams;*

b. *Refuel – Selects* ~~*Neutron Monitoring System (NMS) scram function for low neutron flux level operation (but does not disable the average power range monitor scram)*~~ APRM neutron flux setdown, SRNM high flux and neutron flux short period scrams*; bypasses main steam line isolation* ~~*and reactor high water level*~~ turbine control valve fast closure, and turbine stop valve closure *scrams;*

c. *Startup/Hot Standby – Selects* ~~*NMS scram function for low neutron flux level operation (startup range neutron monitors)*~~ APRM neutron flux setdown, SRNM high flux and neutron flux short period scrams*; bypasses main steam line isolation* ~~*and reactor high water level*~~ turbine control valve fast closure, and turbine stop valve closure *scrams; and*

d. *Run –* ~~*Selects*~~ Disables all bypasses enabled by the other reactor mode switch positions; bypasses APRM neutron flux setdown and all SRNM scrams; and selects *NMS scram function for power range operation.*

LCO

STD DEP 16.3-27

As described in LCO 3.0.7, compliance with this Special Operations LCO is optional. MODES 3, 4, and 5 operations not specified in Table 1.1-1 can be performed in accordance with other Special Operations LCOs (i.e., LCO 3.10.1, "Inservice Leak and Hydrostatic Testing Operation," *LCO 3.10.3, "Rod Withdrawal – Hot Shutdown," LCO 3.10.4, "Rod Withdrawal – Cold Shutdown,"* LCO 3.10.5, "Control Rod Drive (CRD) Removal-Refueling," LCO 3.10.6, "Multiple Control Rod Withdrawal-Refueling" ~~*and LCO 3.10.7, "Control Rod Testing – Operating"*~~ LCO 3.10.8, "Shutdown Margin (SDM) Test-Refueling," LCO 3.10.11, "Low Power PHYSICS TEST" and LCO 3.10.12, "Multiple Control Rod Drive Subassembly Removal-Refueling" *without meeting this LCO or its ACTIONS. If any testing is performed that involves the reactor mode switch interlocks and requires repositioning beyond that specified in Table 1.1-1 for the current MODE of operation, the testing can be performed, provided all interlock functions potentially defeated are administratively controlled. In MODES 3, 4, and 5 with the reactor mode switch in shutdown as specified in Table 1.1-1, all control rods are fully inserted and a control rod block is initiated. Therefore, all control rods in core cells that contain one or more fuel assemblies must be verified fully inserted while in MODES 3, 4, and 5 with the reactor mode switch in other than the shutdown position. The additional LCO requirement to preclude CORE ALTERATIONS is appropriate for MODE 5 operations, as discussed below, and is inherently met in MODES 3 and 4 by the definition of CORE ALTERATIONS, which cannot be performed with the vessel head in place.*

B 3.10 SPECIAL OPERATIONS

B 3.10.3 Control Rod Withdrawal – Hot Shutdown

BASES

The information in this section of the reference ABWR DCD, including all subsections, is incorporated by reference with the following departures.

STD DEP 7.7-18
STD DEP 16.3-24

BACKGROUND

The purpose of this MODE 3 Special Operations LCO is to permit the withdrawal of a single control rod, or control rod pair, for testing while in hot shutdown, by imposing certain restrictions. In MODE 3, the reactor mode switch is in the shutdown position, and all control rods are inserted and blocked from withdrawal. Many systems and functions are not required in these conditions, due to other installed interlocks that are actuated when the reactor mode switch is in the shutdown position. However, circumstances will arise while in MODE 3 that present the need to withdraw a single control rod, or control rod pair, for various tests (e.g., friction tests, scram timing, and coupling integrity checks). These single control rod, or control rod pair, withdrawals are normally accomplished by selecting the refuel position for the reactor mode switch. A control rod pair (those associated by a shared CRD hydraulic control unit) may be withdrawn by utilizing the ~~Rod Test Switch~~ RCIS scram test mode *which "gangs" the two rods together for rod position and control purposes. This Special Operations LCO provides the appropriate additional controls to allow a single control rod, or control rod pair, withdrawal in MODE 3.*

STD DEP 7.7-18

APPLICABLE SAFETY ANALYSES

With the reactor mode switch in the refuel position, the analyses for control rod withdrawal during refueling are applicable and, provided the assumptions of these analyses are satisfied in MODE 3, these analyses will bound the consequences of an accident. Explicit safety analyses (Ref. 1) demonstrate that the functioning of the refueling interlocks and adequate SDM will preclude unacceptable reactivity excursions.

Refueling interlocks restrict the movement of control rods to reinforce operational procedures that prevent the reactor from becoming critical. These interlocks prevent the withdrawal of more than one control rod or control rod pair. Under these conditions, the core will always be shut down even with the highest worth control rod pair withdrawn if adequate SDM exists.

Control rod pairs have been established for each control rod drive hydraulic control unit (except for the one rod which has its own accumulator). These pairs are selected and analyzed so that adequate shutdown margin is maintained with any control rod pair fully withdrawn. When the ~~rod test switch~~ RCIS scram test mode *is used and GANG mode is selected for the RCIS, the selected rod pair is substituted for a single rod within the appropriate logic in order to satisfy the refuel mode rod-out interlock. The rod pair may then be withdrawn simultaneously.*

LCO

As described in LCO 3.0.7, compliance with this Special Operations LCO is optional. Operation in MODE 3 with the reactor mode switch in the refuel position can be performed in accordance with other Special Operations LCO (i.e., LCO 3.10.2, "Reactor Mode Switch Interlock Testing~~,~~" ~~and LCO 3.10.4,"Control Rod Withdrawal – Cold Shutdown"~~) without meeting this Special Operations LCO or its ACTIONS. However, if a single control rod, or control rod pair, withdrawal is desired in MODE 3, controls consistent with those required during refueling must be implemented and this Special Operations LCO applied. The refueling interlocks of LCO 3.9.2, "Refuel Position Rod-Out Interlock," required by this Special Operations LCO, will ensure that only one control rod, or control rod pair, can be withdrawn.

STD DEP 16.3-24

B 3.10 SPECIAL OPERATIONS

B 3.10.4 Control Rod Withdrawal – Cold Shutdown

BASES

The information in this section of the reference ABWR DCD, including all subsections, is incorporated by reference with the following departures.

STD DEP 7.7-18
STD DEP 16.3-20

BACKGROUND

The purpose of this MODE 4 Special Operations LCO is to permit the withdrawal of a single control rod, or control rod pair, for testing or maintenance, while in cold shutdown, by imposing certain restrictions. In MODE 4, the reactor mode switch is in the shutdown position, and all control rods are inserted and blocked from withdrawal. Many systems and functions are not required in these conditions, due to the installed interlocks associated with the reactor mode switch in the shutdown position. Circumstances will arise while in MODE 4, however, that present the need to withdraw a single control rod, or control rod pair, for various tests (e.g., friction tests, scram time testing, and coupling integrity checks). Certain situations may also require the removal of the associated control rod drives (CRD). These single or dual control rod withdrawals and possible subsequent removals are normally accomplished by selecting the refuel position for the reactor mode switch. A control rod pair (those associated by a single CRD hydraulic control unit) may be withdrawn by utilizing the ~~Rod Test Switch~~ RCIS scram test mode*, which "gangs" the two rods together for rod position and control purposes.*

APPLICABLE SAFETY ANALYSES

With the reactor mode switch in the refuel position, the analyses for control rod withdrawal during refueling are applicable and, provided the assumptions of these analyses are satisfied in MODE 4, these analyses will bound the consequences of an accident. Explicit safety analyses (Ref. 1) demonstrate that the functioning of the refueling interlocks and adequate SDM will preclude unacceptable reactivity excursions.

Refueling interlocks restrict the movement of control rods to reinforce operational procedures that prevent the reactor from becoming critical. These interlocks prevent the withdrawal of more than one control rod, or control rod pair. Under these conditions, the core will always be shut down even with the highest worth control rod pair withdrawn if adequate SDM exists.

APPLICABLE SAFETY ANALYSES (continued)

Control rod pairs have been established for each control rod drive hydraulic control unit (except for the one rod which has its own accumulator). These pairs are selected and analyzed so that adequate shutdown margin is maintained with any control rod pair fully withdrawn. When the ~~Rod Test Switch~~ RCIS scram test mode *is used and GANG mode is selected for the RCIS, the selected rod pair is substituted for a single rod within the appropriate logic in order to satisfy the refuel mode rod-out interlock. The rod pair may then be withdrawn simultaneously.*

STD 16.3-20

LCO

As described in LCO 3.0.7, compliance with this Special Operations LCO is optional. Operation in MODE 4 with the reactor mode switch in the refuel position can be performed in accordance with other LCOs (i.e., Special Operations LCO 3.10.2, "Reactor Mode Switch Interlock Testing~~,~~" ~~and LCO 3.10.3, "Control Rod Withdrawal – Hot Shutdown"~~) without meeting this Special Operations LCO or its ACTIONS. If a single control rod, or control rod pair, withdrawal is desired in MODE 4, controls consistent with those required during refueling must be implemented and this Special Operations LCO applied.

B 3.10 SPECIAL OPERATIONS

B 3.10.5 Control Rod Drive (CRD) Removal – Refueling

BASES

The information in this section of the reference ABWR DCD, including all subsections, is incorporated by reference with the following departures.

STD DEP 7.7-18
STD DEP 16.3-23

BACKGROUND

The purpose of this MODE 5 Special Operations LCO is to permit the removal of a CRD during refueling operations by imposing certain administrative controls. Refueling interlocks restrict the movement of control rods and the operation of the refueling equipment to reinforce operational procedures that prevent the reactor from becoming critical during refueling operations. During refueling operations, no more than one control rod, or control pair, is permitted to be withdrawn from a core cell containing one or more fuel assemblies. The refueling interlocks use the "full in" position indicators to determine the position of all control rods. If the "full in" position signal is not present for every control rod, then the all rods in permissive for the refueling equipment interlocks is not present and fuel loading is prevented. Also, the refuel position rod-out interlock will not allow the withdrawal of a second control rod. A control rod drive pair (those associated by a shared CRD hydraulic control unit) may be removed under the control of the rod-out interlock by utilizing the ~~rod test switch~~ RCIS scram test mode*. This switch allows the CRD pair to be treated as one CRD for purposes of the rod-out interlock.*

APPLICABLE SAFETY ANALYSES

With the reactor mode switch in the refuel position, the analyses for control rod withdrawal during refueling are applicable and, provided the assumptions of these analyses are satisfied, these analyses will bound the consequences of accidents. Explicit safety analyses (Ref. 1) demonstrate that the proper operation of the refueling interlocks and adequate SDM will preclude unacceptable reactivity excursions.

Control rod pairs have been established for each control rod drive hydraulic control unit (except for the center rod which has its own accumulator). These pairs are selected and analyzed so that adequate shutdown margin is maintained with any control rod pair fully withdrawn. When the ~~rod test switch~~ RCIS scram test mode *is used, the selected rod pair is substituted for a single rod within the appropriate logic in order to satisfy the refuel mode rod-out interlock. The rod pair may then be withdrawn simultaneously.*

STD DEP 16.3-23
LCO

*As described in LCO 3.0.7, compliance with this Special Operations LCO is optional. Operation in MODE 5 with any of the following LCOs – LCO 3.3.1.1, "*Safety System Logic and Control (SSLC) Sensor~~*SSLC*~~ *Instrumentation," LCO 3.3.1.2, "Reactor Protection System (RPS) and* Main Steam Isolation Valve (MSIV) ~~*MSIV Trip*~~ *Actuation* ~~*Logic*~~*," LCO 3.3.8.1, "*~~*Vital AC*~~ *Electric Power Monitoring," LCO 3.9.1, LCO 3.9.2, LCO 3.9.4, or LCO 3.9.5 - not met can be performed in accordance with the Required Actions of these LCOs without meeting this Special Operations LCO or its ACTIONS.*

However, if a single CRD or CRD drive pair removal from a core cell containing one or more fuel assemblies is desired in MODE 5, controls consistent with those required by LCO 3.3.1.1, LCO 3.3.1.2, LCO 3.3.8. 21, LCO 3.9.1, LCO 3.9.2, LCO 3.9.4, and LCO 3.9.5 must be implemented and this Special Operations LCO applied.

STD DEP 16.3-23
APPLICABILITY

Operation in MODE 5 is controlled by existing LCOs. The allowance to comply with this Special Operations LCO in lieu of the ACTIONS of LCO 3.3.1.1, LCO 3.3.1.2, LCO 3.3.8.~~*2*~~*1, LCO 3.9.1, LCO 3.9.2, LCO 3.9.4, and LCO 3.9.5 is appropriately controlled with the additional administrative controls required by this Special Operations LCO, which reduces the potential for reactivity excursions.*

B 3.10 SPECIAL OPERATIONS

B 3.10.6 Multiple Control Rod Withdrawal – Refueling

BASES

The information in this section of the reference ABWR DCD, including all subsections, is incorporated by reference with no departures or supplements.

[This page intentionally left blank]

B 3.10 SPECIAL OPERATIONS

B 3.10.7 Control Rod Testing – Operating

BASES

The information in this section of the reference ABWR DCD, including all subsections, is incorporated by reference with the following departure.

STD DEP 16.3-4

LCO

As described in LCO 3.0.7, compliance with this Special Operations LCO is optional. Control rod testing may be performed in compliance with the prescribed sequences of LCO 3.1.6, and during these tests, no exceptions to the requirements of LCO 3.1.6 are necessary. For testing performed with a sequence not in compliance with LCO 3.1.6, the requirements of LCO 3.1.6 may be suspended, provided additional administrative controls are placed on the test to ensure that the assumptions of the special safety analysis for the test sequence remain valid. When deviating from the prescribed sequences of LCO 3.1.6, ~~individual control rods must be bypassed in the Rod Action and Position Information (RAPI) Subsystem~~ the approved control rod sequence must be enforced by the RWM (LCO 3.3.5.1 Function 1b); or *~~A~~assurance that the test sequence is followed can be provided by a second licensed operator or other qualified member of the technical staff verifying conformance to the approved test sequence. ~~These controls are consistent with those normally applied to operation in the startup range as defined in SR 3.3.5.1.7, when it is necessary to deviate from the prescribed sequence (e.g., an inoperable control rod that must be fully inserted).~~*

SURVEILLANCE REQUIREMENTS

SR 3.10.7.1 and SR 3.10.7.2

~~*During performance of the special test, a second licensed operator or other qualified member of the technical staff is required to verify conformance with the approved sequence for the test. This verification must be performed during control rod movement to prevent deviations from the specified sequence. This Surveillance provides adequate assurance that the specified test sequence is being followed and is also supplemented by SR 3.3.5.1.7, which requires verification of the bypassing of control rods in RAPI and subsequent movement of these control rods.*~~ The control rod withdrawal sequences during the special tests may be enforced by the RWM (LCO 3.3.5.1, Function 1.b, MODE 1 or 2 requirements, as applicable) or by a second licensed operator or other qualified member of the technical staff. As noted, either the applicable SRs for the RWM (LCO 3.3.5.1) must be satisfied according to the applicable Frequency (SR 3.10.7.1 and SR 3.10.7.2), or the proper movement of control rods must be verified. This latter verification (i.e., SR 3.10.7.1) must be performed during control rod movement to prevent deviations from the specified sequence. Either of these surveillances provides adequate assurance that the specified test sequence is being followed.

[This page intentionally left blank]

B 3.10 SPECIAL OPERATIONS

B 3.10.8 SHUTDOWN MARGIN (SDM) Test – Refueling

BASES

The information in this section of the reference ABWR DCD, including all subsections, is incorporated by reference with the following departure.

STD DEP 16.3-18

ACTIONS

A.1

With one or more of the requirements of this LCO not met for reasons other than Condition B*, the testing should be immediately stopped by placing the reactor mode switch in the shutdown or refuel position. This results in a condition that is consistent with the requirements for MODE 5 where the provisions of this Special Operations LCO are no longer required.*

B.1 and B.2

With the requirements of this LCO not met because a control rod is not coupled to its associated CRD*, the affected control rod shall be declared inoperable* and the reactor mode switch shall be placed in the Shutdown or Refuel position. *This results in a condition that is consistent with the requirements for MODE 5 where the provisions of this Special Operations LCO are no longer required* but the requirements of LCO 3.9.5, "Control Rod OPERABILITY - Refueling" apply. If the reactor mode switch were to be left in the startup/hot standby position, the unit would be considered to be in Mode 2 because LCO 3.10.8.c, which requires each withdrawn control rod to be coupled to its associated CRD, would not be met. Action must be initiated immediately to ensure that the Required Action of LCO 3.9.5, to fully insert inoperable withdrawn control rods, is taken.

[This page intentionally left blank]

B 3.10 SPECIAL OPERATIONS

B 3.10.9 Reactor Internal Pumps – Testing

BASES

The information in this section of the reference ABWR DCD, including all subsections, is incorporated by reference with no departures, but the following site-specific supplements. The site-specific supplements partially address COL License Information Item 16.1.

BACKGROUND

The purpose of this Special Operations LCO in MODES 1 and 2 is to allow either the PHYSICS TESTS or the Startup Test Program to be performed with less than ~~[~~nine~~]~~ reactor internal pumps in operation. Testing performed as part of the Startup Test Program (Ref. 1), or PHYSICS TESTS authorized under the provisions of 10 CFR 50.59 (Ref. 2) or otherwise approved by the NRC, may be required to be performed under natural circulation conditions with the reactor critical. LCO 3.4.1, "Reactor Internal Pumps (RIP) Operating," requires that ~~[~~nine~~]~~ reactor internal pumps be in operation during MODES 1 and 2. This Special Operations LCO provides the appropriate additional restrictions to allow testing at natural circulation conditions or with less than ~~[~~nine~~]~~ reactor internal pumps in operation with the reactor critical.

APPLICABLE SAFETY ANALYSES

The operation of the Reactor Coolant Recirculation System is an initial condition assumed in the design basis loss of coolant accident (Ref. 3). During a LOCA the operating RIPs are all assumed to trip at time zero due to a coincident loss of offsite power. The subsequent mean core flow coastdown will be immediate and rapid because of the relatively low inertia of the pumps. During PHYSICS TESTS ≤ 5% RTP, or limited testing during the Startup Test Program for the initial cycle, the decay heat in the reactor coolant is sufficiently low, such that the consequences of an accident are reduced and the coastdown characteristics of the RIPs are not important. In addition, the probability of a Design Basis Accident (DBA) or other accidents occurring during the limited time allowed at natural circulation or with less than ~~[~~nine~~]~~ RIPs in operation is low.

As described in LCO 3.0.7, compliance with Special Operations LCOs is optional, and therefore, no criteria of NRC Policy Statement apply. Special Operations LCOs provide flexibility to perform certain operations by appropriately modifying requirements of other LCOs. A discussion of the criteria satisfied for the other LCOs is provided in their respective Bases.

LCO

As described in LCO 3.0.7, compliance with this Special Operations LCO is optional. However, to perform testing at natural circulation conditions or with less than ~~[~~nine~~]~~ RIPs operating, operations must be limited to those tests defined in the Startup Test Program or approved PHYSICS TESTS performed at ≤ 5% RTP. To minimize the probability of an accident, while operating at natural circulation conditions or with

LCO (CONTINUED)

less than ~~[~~nine~~]~~ operating RIPs the duration of these tests is limited to ≤ 24 hours. This Special Operations LCO then allows suspension of the requirements of LCO 3.4.1 during such testing. In addition to the requirements of this LCO, the normally required MODE 1 or MODE 2 applicable LCOs must be met.

APPLICABILITY

This Special Operations LCO may only be used while performing testing at natural circulation conditions or while operating, with less than ~~[~~nine~~]~~ RIPs, as may be required as part of the Startup Test Program or during low power PHYSICS TESTS. Additional requirements during these tests to limit the operating time at natural circulation conditions reduce the probability that a DBA may occur during natural circulation conditions. Operations in all other MODES are unaffected by this LCO.

ACTIONS

A.1

With the testing performed at natural circulation conditions or less than ~~[~~nine~~]~~ RIPs operating, and the duration of the test exceeding the 24 hour time limit, actions should be taken to promptly shut down. Inserting all insertable control rods will result in a condition that does not require all ~~[~~nine~~]~~ RIPs to be in operation. The allowed Completion Time of 1 hour provides sufficient time to insert the withdrawn control rods.

B.1

With the requirements of this LCO not met for reasons other than those specified in Condition A (e.g., low power PHYSICS TESTS exceeding 5% RTP, or unapproved testing at natural circulation), the reactor mode switch should immediately be placed in the shutdown position. This results in a condition that does not require all ~~[~~nine~~]~~ RIPs to be in operation. The action to immediately place the reactor mode switch in the shutdown position prevents unacceptable consequences from an accident initiated from outside the analysis bounds. Also, operation beyond authorized bounds should be terminated upon discovery.

SURVEILLANCE REQUIREMENTS

SR 3.10.9.1 and SR 3.10.9.2

Periodic verification of the administrative controls established by this LCO will ensure that the reactor is operated within the bounds of this LCO. Because the 1 hour Frequency provides frequent checks of the LCO requirements during the allowed 24 hour testing interval, the probability of operation outside the limits concurrent with a postulated accident is reduced even further.

REFERENCES

1. *DCD Tier 2, Chapter 14.*
2. *10 CFR 50.59*
3. *DCD Tier 2, Section 6.3.3.*

[This page intentionally left blank]

B 3.10 SPECIAL OPERATIONS

B 3.10.10 Training Startups

BASES

The information in this section of the reference ABWR DCD, including all subsections, is incorporated by reference with no departures or supplements.

[This page intentionally left blank]

B 3.10 SPECIAL OPERATIONS

B 3.10.11 ~~*Training Startups*~~ Low Power PHYSICS TESTS

BASES

The information in this section of the reference ABWR DCD, including all subsections, is incorporated by reference with no departures or supplements.

[This page intentionally left blank]

B 3.10 SPECIAL OPERATIONS

B 3.10.12 Multiple Control Rod Drive Subassembly Removal – Refueling

BASES

The information in this section of the reference ABWR DCD, including all subsections, is incorporated by reference with the following departure.

STD DEP 16.3-17

BACKGROUND

The purpose of this MODE 5 Special Operations LCO is to permit multiple control rod drive subassembly removal during refueling by imposing certain administrative controls. For the purposes of this LCO, CRD subassembly removal is the removal of the CRD motor assembly, which includes the motor, brake and synchro, the position indicator probe (PIP) and the spool piece assembly, with the associated control rod maintained in the fully inserted position by applicable *mechanical anti-rotational locking devices* (i.e., one device applies to FMCRD motor assembly removal prior to spool piece removal, and another device applies to spool piece removal following motor assembly)*. With the CRD subassembly removed, control rod position indication is not available in the control room. Reference 2 contains a description of the CRD subassembly removal.*

This Special Operations LCO establishes the necessary administrative controls to allow bypass of the "full in" position indicators for CRDs with subassemblies removed for maintenance and the associated rods maintained fully inserted by their applicable *mechanical anti-rotation locking devices. LCO 3.10.6 establishes administrative controls for complete removal of multiple CRDs where the control rods are fully withdrawn.*

APPLICABLE SAFETY ANALYSES

Explicit safety analyses (Ref. 1) demonstrate that the functioning of the refueling interlocks and adequate SDM will prevent unacceptable reactivity excursions during refueling. To allow multiple control rod drive subassembly removal, the "full in" position indication is allowed to be bypassed for each control rod drive with its subassembly removed and the associated control rod maintained fully inserted by its applicable *mechanical anti-rotation locking devices.*

APPLICABILITY

Operation in MODE 5 is controlled by existing LCOs. The exceptions from other LCO requirements (e.g., the ACTIONS of LCO 3.9.3, LCO 3.9.4 or LCO 3.9.5) allowed by this Special Operations LCO are appropriately controlled by allowing only the removal of non-adjacent control rod drive subassemblies whose "full in" indicators are allowed to be bypassed and associated control rods maintained fully inserted by their applicable *anti-rotation device~~s~~.*

[This page intentionally left blank]

4.0 DESIGN FEATURES

The information in this section of the reference ABWR DCD, including all subsections, is incorporated by reference with the following departure and site-specific supplements. The site-specific supplements partially address COL License Information Item 16.1.

STP DEP T1 2.5-1

4.1 Site

4.1.1 Site and Exclusion Area Boundaries

The site and exclusion area boundaries ~~[shall be~~ are *~~as~~ described ~~or~~ as ~~shown in Figure 4.1-1~~* follows:

The STP site is located approximately 89 miles southwest of Houston, Texas, and 200 miles southeast of Austin, Texas. The site area is approximately 12,200 acres located in a rural area of south-central Matagorda County. STP 3 & 4 are located within the Exclusion Area Boundary (EAB) already designated for STP 1 & 2. The site boundary entirely encompasses the designated EAB for STP 3 & 4. The EAB is an oval having a minimum distance of approximately 4692 feet from the center of each of the STP 1 & 2 Reactor Containment Buildings. The center of the exclusion area "oval" is a point approximately 305 feet directly west of the center of the Unit 2 Reactor Containment Building~~]~~.

4.1.2 Low Population Zone (LPZ)

The LPZ ~~[shall be~~ is defined by the 3-mile radius circle from a point approximately 305 feet directly west of the center of the Unit 2 Reactor Containment Building. This point is also the center of the existing STP 1 & 2 LPZ ~~as described or as shown in Figure 4.1-2]~~.

STP DEP T1 2.5-1

4.3 Fuel Storage

4.3.1 Criticality

4.3.1.1 The spent fuel storage racks are designed and shall be maintained with:

a. *Fuel assemblies having a maximum k-infinity of 1.35 in the normal reactor core configuration at cold conditions;*

b. *$k_{eff} \leq 0.95$ if fully flooded with unborated water, which includes an allowance for uncertainties as described in Section 9.1 of the DCD Tier 2*; and.~~.~~

~~*4.3.1.2 The new fuel storage racks are designed and shall be maintained with:*~~

~~*a. Fuel assemblies having a maximum k-infinity of 1.35 in the normal*~~

~~*reactor core configuration at 20ºC;*~~

~~*b. keff ≤ 0.95 if fully flooded with unborated water, which includes an allowance for uncertainties as described in Section 9.1 of the DCD Tier 2;*~~

~~*c. keff ≤ 0.98 if moderated by aqueous foam, which includes an allowance for uncertainties as described in Section 9.1 of the DCD Tier 2; and*~~

c. ~~d.~~ A nominal, [approximately 16] cm, center to center distance between fuel assemblies placed in storage racks.

~~*(This figure shall be supplied by the COL applicant.)*~~

~~*This figure shall consist of [a map of] the site area and provide, as a minimum, the information described in Section [2.1.2] of the FSAR relating to [the map].*~~

~~*Figure 4.1-1 (page 1 of 1)*~~
~~*Site and Exclusion Area Boundaries*~~

~~*(This figure shall be supplied by the COL applicant.)*~~

~~*This figure shall consist of [a map of] the site area showing the LPZ boundary. Features such as towns, roads, and recreational areas shall be indicated in sufficient detail to allow identification of significant shifts in population distribution within the LPZ.*~~

~~*Figure 4.1-2 (page 1 of 1)*~~
~~*Low Population Zone*~~

5.0 ADMINISTRATIVE CONTROLS

The information in this section of the reference ABWR DCD, including all subsections, is incorporated by reference with the following departures and site-specific supplements. The site-specific supplements partially address COL License Information Item 16.1.

STD DEP 16.3-100
STD DEP 16.5-1
STD DEP 16.5-2
STD DEP 16.5-3
STD DEP 16.5-4
STD DEP 16.5-5
STD DEP 16.5-6
STD DEP T1 2.14-1
STD DEP T1 3.4-1

5.1 Responsibility

5.1.1 *The ~~[Plant Superintendent]~~* Plant General Manager *shall be responsible for overall unit operation and shall delegate in writing the succession to this responsibility during his absence.*

The ~~[Plant Superintendent]~~ Plant General Manager*, or his designee, in accordance with approved administrative procedures, shall approve, prior to implementation, each proposed test or experiment and proposed changes and modifications to unit systems or equipment that affect nuclear safety.*

STD DEP 16.5-1

5.1.2 *The ~~[~~Shift Supervisor/*Manager *~~(SS)]~~ shall be responsible for the control room command function. A management directive to this effect, signed by the ~~[highest level of corporate or site management]~~* President & Chief Executive Officer*, shall be issued annually to all station personnel. During any absence of the ~~[SS]~~* Shift Supervisor/Manager *from the control room while the unit is in MODE 1, 2,* or *3~~, or 4~~, an individual with an active Senior Reactor Operator (SRO) license shall be designated to assume the control room command function. During any absence of the ~~[SS]~~* Shift Supervisor/Manager *from the control room while the unit is in MODE* 4 or *5, an individual with an active SRO license or Reactor Operator license shall be designated to assume the control room command function.*

[This page intentionally left blank]

5.0 ADMINISTRATIVE CONTROLS

5.2 Organization

5.2.1 *Onsite and Offsite Organizations*

Onsite and offsite organizations shall be established for unit operation and corporate management, respectively. The onsite and offsite organizations shall include the positions for activities affecting safety of the nuclear power plant.

a. *Lines of authority, responsibility, and communication shall be defined and established throughout highest management levels, intermediate levels, and all operating organization positions. These relationships shall be documented and updated, as appropriate, in organization charts, functional descriptions of departmental responsibilities and relationships, and job descriptions for key personnel positions, or in equivalent forms of documentation. These requirements shall be documented in the ~~[applicant's~~ FSAR~~]~~* or the Quality Assurance Program Description (QAPD)*;*

b. *The ~~[Plant Superintendent]~~* Plant General Manager *shall be responsible for overall safe operation of the plant and shall have control over those onsite activities necessary for safe operation and maintenance of the plant;*

c. *The ~~[a specified corporate executive position]~~* President & Chief Executive Officer *shall have corporate responsibility for overall plant nuclear safety and shall take any measures needed to ensure acceptable performance of the staff in operating, maintaining, and providing technical support to the plant to ensure nuclear safety; and*

d. *The individuals who train the operating staff, carry out health physics, or perform quality assurance functions may report to the appropriate onsite manager; however, these individuals shall have sufficient organizational freedom to ensure their independence from operating pressures.*

STD DEP 16.5-2

5.2.2 *Unit Staff*

The unit staff organization shall include the following:

a. *A ~~auxiliary~~* non-licensed *operator shall be assigned to each reactor containing fuel and an additional ~~auxiliary~~* non-licensed *operator shall be assigned for each control room from which a reactor is operating.*[1]

STD DEP 16.5-1

b. *At least one licensed Reactor Operator (RO) shall be present in the control room when fuel is in the reactor. In addition, while the unit is in MODE 1, 2,* or *3~~ or 4~~, at least one licensed Senior Reactor Operator (SRO) shall be present in the control room.*

c. *A ~~[Health Physics~~* Radiation Protection *Technician~~]~~ shall be on site when fuel is in the reactor. The position may be vacant for not more than 2 hours, in order to provide for unexpected absence, provided immediate action is taken to fill the required position.*

---

1 *Two unit sites with both units shutdown or defueled require a total of three ~~auxiliary~~* non-licensed *operators for the two units*

STD DEP 16.5-5

~~d. Administrative procedures shall be developed and implemented to limit the working hours of unit staff who perform safety related functions (e.g., licensed SROs, licensed ROs, health physicist , auxiliary operators, and key maintenance personnel).~~

~~Adequate shift coverage shall be maintained without routine heavy use of overtime. The objective shall be to have operating personnel work an [8 or 12] hour day, nominal 40 hour week, while the unit is operating. However, in the event that unforeseen problems require substantial amounts of overtime to be used, or during extended periods of shutdown for refueling, major maintenance, or major plant modification, on a temporary basis the following guidelines shall be followed:~~

~~1. An individual should not be permitted to work more than 16 hours straight, excluding shift turnover time;~~

~~2. An individual should not be permitted to work more than 16 hours in any 24 hour period, nor more than 24 hours in any 48 hour period, nor more than 72 hours in any 7 day period, all excluding shift turnover time;]~~

~~3. A break of at least 8 hours should be allowed between work periods, including shift turnover time;~~

~~4. Except during extended shutdown periods, the use of overtime should be considered on an individual basis and not for the entire staff on a shift.~~

~~Any deviation from the above guidelines shall be authorized in advance by the [Plant Superintendent] or his designee, in accordance with approved administrative procedures, or by higher levels of management, in accordance with established procedures and with documentation of the basis for granting the deviation.~~

~~*Controls shall be included in the procedures such that individual overtime shall be reviewed monthly by the [Plant Superintendent] or his designee to ensure that excessive hours have not been assigned. Routine deviation from the above guidelines is not authorized.*~~

~~*OR*~~

~~*The amount of overtime worked by unit staff members performing safety related functions shall be limited and controlled in accordance with the NRC Policy Statement on working hours (Generic Letter 82-12).*~~

d. ~~*e.*~~ *The ~~[~~Operations* Division *Manager ~~or Assistant Operations Manager]~~ shall hold an active SRO license.*

e. ~~*f.*~~ *The Shift Technical Advisor (STA) shall provide advisory technical support to the Shift Supervisor ~~(SS)~~/*Manager *in the areas of thermal hydraulics, reactor engineering, and plant analysis with regard to the safe operation of the unit. In addition, the STA shall meet the qualifications specified by the Commission Policy Statement on Engineering Expertise on Shift.*

5.0 ADMINISTRATIVE CONTROLS

5.3 Unit Staff Qualifications

~~*[Reviewer's Note: Minimum qualifications for members of the unit staff shall be specified by use of an overall qualification statement referencing an ANSI Standard acceptable to the NRC staff or by specifying individual position qualifications. Generally, the first method is preferable; however, the second method is adaptable to those unit staffs requiring special qualification statements because of unique organizational structures.]*~~

5.3.1 *Each member of the unit staff shall meet or exceed the minimum qualifications of ~~[~~Regulatory Guide 1.8, Revision* 3, 2000, with the following exception: ~~*2, 1987, or more recent revisions, or ANSI Standard acceptable to the NRC staff]. The staff not covered by [Regulatory Guide 1.8] shall meet or exceed the minimum qualifications of [Regulations, Regulatory Guides, or ANSI Standards acceptable to NRC staff]*~~

a. During cold license operator training prior to Commercial Operation, the Regulatory Position C.1.b of Regulatory Guide 1.8, Revision 2, 1987, applies. Cold license operator candidates meet the training elements defined in ANS/ANSI 3.1-1993 but are exempt from the experience requirements defined in ANS/ANSI 3.1-1993.

[This page intentionally left blank]

5.0 ADMINISTRATIVE CONTROLS

5.4 Technical Specifications (TS) Bases Control

STD DEP 16.5-3

5.4.2 Licensees may make changes to Bases without prior NRC approval provided the changes do not involve either of the following:

a. *A change in the plant-specific TS, or plant-specific DCD Tier 1 or Tier 2* information; or*

b. *A change to the site-specific portion of the FSAR* or Bases *that* requires NRC approval pursuant to ~~*involves an unreviewed safety question as defined in*~~ *10 CFR 50.59, or a change to Tier 2 of the* ~~*plant-specific*~~ ABWR *DCD that* ~~*involves an unreviewed safety question as defined in*~~ requires NRC approval pursuant to *the design certification rule for the ABWR (Appendix A to 10 CFR 52).*

Changes to the Bases implemented without prior NRC approval shall be provided to the NRC on a frequency consistent with 10 CFR 50.71.

[This page intentionally left blank]

5.0 ADMINISTRATIVE CONTROLS

5.5 Procedures, Programs, and Manuals

5.5.1 *Procedures*

5.5.1.1 *Scope*

b. The emergency operating procedures required to implement the requirements of NUREG-0737 and NUREG-0737, Supplement 1, as stated in ~~[~~Generic Letter 82-33~~]~~;

5.5.2 *Programs and Manuals*

The following programs shall be established, implemented, and maintained:

5.5.2.1 *Offsite Dose Calculation Manual (ODCM)*

Licensee initiated changes to the ODCM:

*b. Shall become effective after review and acceptance by plant reviews and the approval of the ~~[Plant Superintendent]~~*Plant General Manager*; and*

STD DEP T1 2.14-1

5.5.2.2 *Primary Coolant Sources Outside Containment*

This program provides controls to minimize leakage from those portions of systems outside containment that could contain highly radioactive fluids during a serious transient or accident to levels as low as practicable. The systems include the Low Pressure Core Flooder, High Pressure Core Flooder, Residual Heat Removal, Reactor Core Isolation Cooling, ~~Hydrogen Recombiner,~~ Post Accident Sampling, Standby Gas Treatment, Suppression Pool Cleanup, Reactor Water Cleanup, Fuel Pool Cooling and Cleanup, Process Sampling, Containment Atmospheric Monitoring, and Fission Product Monitor. The program shall include the following:

a. Preventive maintenance and periodic visual inspection requirements; and

b. Integrated leak test requirements for each system at refueling cycle intervals or less.

STD DEP 16.5-6

5.5.2.6 *Inservice Testing Program*

This program provides controls for inservice testing of ASME Code Class 1, 2, and 3 components. *This program shall include the following:*

a. *Testing frequencies specified in ~~Section XI of~~ the* applicable edition and addenda of the *ASME ~~Boiler and Pressure Vessel Code and applicable Addenda as follows~~* Code for Operations and Maintenance of Nuclear Power Plants (ASME OM Code)*:*

ASME ~~Boiler and Pressure Vessel~~ OM *Code and applicable Addenda terminology for inservice testing activities*	*Required Frequencies for performing inservice testing activities*
Weekly	*At least once per 7 days*
Monthly	*At least once per 31 days*
Quarterly or every 3 months	*At least once per 92 days*
Semiannually or every 6 months	*At least once per 184 days*
Every 9 months	*At least once per 276 days*
Yearly or annually	*At least once per 366 days*
Biennially or every 2 years	*At least once per 731 days*

b. *The provisions of SR 3.0.2 are applicable to the above required Frequencies* and to other normal and accelerated Frequencies specified as 2 years or less in the Inservice Testing Program *for performing inservice testing activities;*

c. *The provisions of SR 3.0.3 are applicable to inservice testing activities; and*

d. *Nothing in the ASME ~~Boiler and Pressure Vessel~~* OM *Code shall be construed to supersede the requirements of any TS.*

5.5.2.7 Ventilation Filter Testing Program (VFTP)

*A program shall be established to implement the following required testing of Engineered Safety Feature (ESF) filter ventilation systems at the frequencies specified in ~~[~~Regulatory Guide 1.*52, Revision 2*~~]~~, and in accordance with Regulatory Guide 1.52, Revision 2;~~ and~~ ASME N510-1989; and AG-1-1991* as specified below:

a. *Demonstrate for each of the ESF systems that an inplace test of the high efficiency particulate air (HEPA) filters shows a penetration and system bypass < ~~[~~0.05~~]~~% when tested in accordance with Regulatory Guide 1.52, Revision 2, and ASME N510-1989 at the system flowrate specified below ~~[~~± 10~~]~~%:*

ESF Ventilation System	*Flowrate*
Control Room Habitability System	5,100 m^3/h
Standby Gas Treatment System	6,800 m^3/h

b. *Demonstrate for each of the ESF systems that an inplace test of the charcoal adsorber shows a penetration and system bypass < [0.05]% when tested in accordance with Regulatory Guide 1.52, Revision 2, and ASME N510-1989 at the system flowrate specified below [± 10]%:*

ESF Ventilation System	*Flowrate*
Control Room Habitability System	5,100 m^3/h
Standby Gas Treatment System	6,800 m^3/h

c. *Demonstrate for each of the ESF systems that a laboratory test of a sample of the charcoal adsorber, when obtained as described in Regulatory Guide 1.52, Revision 2, shows the methyl iodide penetration less than the value specified below when tested in accordance with [ASTM D3803-1989] at a temperature of ≤ [30]°C and greater than or equal to the relative humidity specified below:*

ESF Ventilation System	*Penetration*	*RH*
Control Room Habitability System	*0.175%*	*70%*
Standby Gas Treatment System	*0.175%*	*70%*

d. *Demonstrate for each of the ESF systems that the pressure drop across the combined HEPA filters, the prefilters, and the charcoal adsorbers is less than the value specified below when tested in accordance with Regulatory Guide 1.52, Revision 2, and ASME N510-1989 at the system flowrate specified below [± 10]%:*

ESF Ventilation System	Delta P	Flowrate
Control Room Habitability System	1745.8 Pa	5,100 m^3/h
Standby Gas Treatment System	2147.9 Pa	6,800 m^3/h

e. Demonstrate that the heaters for each of the ESF systems dissipate the value specified below [± 10]% when tested in accordance with ASME N510-1989:

ESF Ventilation System	*Wattage*
Control Room Habitability System	65.6 kW
Standby Gas Treatment System	26.2 kW

The provisions of SR 3.0.2 and SR 3.0.3 are applicable to the VFTP test frequencies.

STD DEP 16.3-100

5.5.2.11 Setpoint Control Program (SCP)

a. The Setpoint Control Program (SCP) implements the regulatory requirement of 10 CFR 50.36(c)(1)(ii)(A) that technical specifications will include items in the category of limiting safety system settings (LSSS), which are settings for automatic protective devices related to those variables having significant safety functions.

b. The Nominal Trip Setpoint (NTS), Allowable Value (AV), As-Found Tolerance (AFT), and As-Left Tolerance (ALT) for each Technical Specification required automatic protection instrumentation function shall be calculated in conformance with the NRC approved WCAP-17119-P “Methodology for South Texas Project Units 3 & 4 ABWR Technical Specification Setpoints, Revision 2.” Additionally, the NRC approved methodology shall define acceptable margin as margin greater than or equal to the ALT.

c. For each Technical Specification required automatic protection instrumentation function, performance of a SENSOR CHANNEL CALIBRATION, CHANNEL CALIBRATION, or CHANNEL FUNCTIONAL TEST (CFT) surveillance "in accordance with the Setpoint Control Program" shall include the following:

1. The as-found value of the instrument channel trip setting shall be compared with the specified NTS.

i. If the as-found value of the instrument channel trip setting differs from the specified NTS by more than the pre-defined test acceptance criteria band (i.e., the specified AFT), then the instrument channel shall be evaluated to verify that it is functioning in accordance with its design basis before declaring the surveillance requirement met and returning the instrument channel to service. An Instrument Channel is determined to be functioning in accordance with its design basis if it can be recalibrated to within the ALT. This as-found condition shall be entered into the plant’s corrective action

program.

ii. If the as-found value of the instrument channel trip setting is less conservative than the specified AV, the surveillance requirement is not met and the instrument channel shall be immediately declared inoperable.

2. The instrument channel trip setting shall be set to a value within the specified ALT around the specified NTS at the completion of the surveillance; otherwise, the surveillance requirement is not met and the instrument channel shall be immediately declared inoperable.

d. The difference between the instrument channel trip setting as-found value and the previous as-left value for each Technical Specification required automatic protection instrumentation function shall be trended and evaluated to verify that the instrument channel is functioning in accordance with its design basis.

e. The SCP shall establish a document containing the current value of the specified NTS, AV, AFT, and ALT for each Technical Specification required automatic protection instrumentation function and references to the calculation documentation. Changes to this document shall be governed by the regulatory requirement of 10 CFR 50.59. In addition, changes to the specified NTS, AV, AFT, and ALT values shall be governed by the NRC approved setpoint methodology. This document, including any midcycle revisions or supplements, shall be provided upon issuance for each reload cycle to the NRC.

[This page intentionally left blank]

5.0 ADMINISTRATIVE CONTROLS

5.7 Reporting Requirements

STD DEP 16.5-4

5.7.1 *Routine Reports*

The following reports shall be submitted in accordance with 10 CFR 50.4.

5.7.1.1 *Annual Reports*

----------NOTE----------
A single submittal may be made for a multiple unit station. The submittal should combine sections common to all units at the station units at the station.

Annual Reports covering the activities of the unit as described below for the previous calendar year shall be submitted by ~~March 31~~ April 30 of each year. ~~[~~The initial report shall be submitted by ~~March 31~~ April 30 of the year following initial criticality.~~]~~

Reports required on an annual basis include:

a. Occupational Radiation Exposure Report

A tabulation on an annual basis of the number of station, utility, and other personnel (including contractors) for whom monitoring was required, receiving an annual deep dose equivalent > 1 mSv and the associated collective deep dose equivalent (reported in person-rem) according to work and job functions (e.g., reactor operations and surveillance, inservice inspection, routine maintenance, special maintenance [describe maintenance], waste processing, and refueling). This tabulation supplements the requirements of 10 CFR 20.2206. The dose assignments to various duty functions may be estimated based on pocket dosimeter, thermoluminescent dosimeter (TLD), or film badge measurements. Small exposures totalling < 20% of the individual total dose need not be accounted for. In the aggregate, at least 80% of the total deep dose equivalent received from external sources should be assigned to specific major work functions.

5.7.1.2 Annual Radiological Environmental Operating Report

----------NOTE----------
A single submittal may be made for a multiple unit station. The submittal should combine sections common to all units at the station.

The Annual Radiological Environmental Operating Report covering the operation of the unit during the previous calendar year shall be submitted by May 15 of each year. The report shall include summaries, interpretations, and analyses of trends of the results of the Radiological Environmental Monitoring Program for the reporting period. The material provided shall be consistent with the objectives outlined in the Offsite Dose Calculation Manual (ODCM), and in 10 CFR 50, Appendix I, Sections IV.B.2, IV.B.3, and IV.C.

The Annual Radiological Environmental Operating Report shall include the results of analyses of all radiological environmental samples and of all environmental radiation measurements taken during the period pursuant to the locations specified in the table and figures in the ODCM, as well as summarized and tabulated results of these analyses and measurements [in the format of the table in the Radiological Assessment Branch Technical Position, Revision 1, November 1979]~~. [The report shall identify the TLD results that represent collocated dosimeters in relation to the NRC TLD program and the exposure period associated with each result.]~~ In the event that some individual results are not available for inclusion with the report, the report shall be submitted noting and explaining the reasons for the missing results. The missing data shall be submitted in a supplementary report as soon as possible.

5.7.1.3 Radioactive Effluent Release Report

----------NOTE----------
A single submittal may be made for a multiple unit station. The submittal should combine sections common to all units at the station; however, for units with separate radwaste systems, the submittal shall specify the releases of radioactive material from each unit.

The Radioactive Effluent Release Report covering the operation of the unit during the previous year shall be submitted prior to May 1 of each year in accordance with 10 CFR 50.36a. The report shall include a summary of the quantities of radioactive liquid and gaseous effluents and solid waste released from the unit. The material provided shall be consistent with the objectives outlined in the ODCM and Process Control Program and in conformance with 10 CFR 50.36a and 10 CFR 50, Appendix I, Section IV.B.1.

5.7.1.4 Monthly Operating Reports

Routine reports of operating statistics and shutdown experience~~[~~, including documentation of all challenges to the safety/relief valves~~]~~ shall be submitted on a monthly basis no later than the 15th of each month following the calendar month covered by the report.

5.7.1.5 CORE OPERATING LIMITS REPORT (COLR)

a. Core operating limits shall be established prior to each reload cycle, or prior to any remaining portion of a reload cycle, and shall be documented in the COLR for the following:

[~~*The individual specifications that address core operating limits must be referenced here.*~~]

LCO 3.2.1, "Average Planar Linear Heat Generation Rate (APLHGR);"
LCO 3.2.2, "Minimum Critical Power Ratio (MCPR);"
LCO 3.3.1.1, "SSLC Sensor Instrumentation;" and
LCO 3.3.4.1, "ATWS and EOC-RPT Instrumentation."

b. The analytical methods used to determine the core operating limits shall be those previously reviewed and approved by the NRC, specifically those described in the following documents:

[~~*Identify the Topical Report(s) by number, title, date, and NRC staff approval document, or identify the staff Safety Evaluation Report for a plant specific methodology by NRC letter and date.*~~NEDE-24011-P-A, General Electric Standard Application on Fuel, September 1988]

c. The core operating limits shall be determined such that all applicable limits (e.g., fuel thermal mechanical limits, core thermal hydraulic limits, Emergency Core Cooling Systems (ECCS) limits, nuclear limits such as SDM, transient analysis limits, and accident analysis limits) of the safety analysis are met.

d. The COLR, including any midcycle revisions or supplements, shall be provided upon issuance for each reload cycle to the NRC.

5.7.1.6 *Reactor Coolant System (RCS) PRESSURE AND TEMPERATURE LIMITS REPORT (PTLR)*

The RCS pressure and temperature limits, including heatup and cooldown rates, criticality, and hydrostatic and leak test limits, shall be established and documented in the PTLR. ~~*[The individual Specifications that*~~ LCO 3.4.9, RCS Pressure and Temperature (P/T) Limits *addresses the reactor vessel pressure and temperature limits and the heatup and cooldown rates* ~~*may be referenced.]*~~*. The analytical methods used to determine the pressure and temperature limits including the heatup and cooldown rates shall be those previously reviewed and approved by the NRC in* ~~*[Topical Report(s), number, title, date, and NRC staff approval document, or staff safety evaluation report for a plant specific methodology by NRC letter and date*~~SIR-05-044-A, "Pressure-Temperature Limits Report Methodology for Boiling Water Reactors," dated April 2007, and approved for referencing in license applications by the NRC in letter dated February 6, 2007 from Ho K Nieh Deputy Director, Division of Policy and Rulemaking, Office of Nuclear Reactor Regulation to Mr. Randy C. Bunt, Chair, BWR Owner's Group.~~*]*
The reactor vessel pressure and temperature limits, including those for heatup and cooldown rates, shall be determined so that all applicable limits (e.g., heatup limits, cooldown limits, and inservice leak and hydrostatic testing limits) of the analysis are met. The PTLR, including revisions or supplements thereto, shall be provided upon issuance for each reactor vessel fluency period.

STD DEP T1 3.4-1

5.7.2 *Special Reports*

Special Reports shall be submitted in accordance with 10 CFR 50.4 within the time period specified for each report.

The following Special Reports shall be submitted:

a. *When a Special Report is required by Condition C of LCO 3.3.3.1, "Essential* ~~*Multiplexer System*~~ Communication Function*," a report shall be submitted within the following 14 days. The report shall outline the cause of the inoperability, consideration of common mode failures, and the plans and schedule for restoring the* ~~*EMS*~~ data communication *transmission segments to OPERABLE status.*

b. When a Special Report is required by Specification 5.5.2.10, "Software Error Evaluation Program," a report shall be submitted within the following 7 days. The report shall outline the cause of the inoperability, the affected components, and the plans and schedule for completing proposed remedial actions.

[This page intentionally left blank]

17 Quality Assurance

17.0 Introduction

The information in this section of the reference ABWR DCD, including all subsections and tables, as modified by the STP Nuclear Operating Company Application to Amend the Design Certification rule for the U.S. Advanced Boiling Water Reactor (ABWR), "ABWR STP Aircraft Impact Assessment (AIA) Amendment Revision 3," dated September 23, 2010 is incorporated by reference with the following site-specific supplement, which addresses COL Information Item 17.1.

The STP 3 & 4 Quality Assurance Program Description (QAPD) for construction and operations, including detailed design and equipment selection during the Combined Operating License (COL) design phase, is based on the latest guidance of Chapter 17.5 of NUREG 0800 Standard Review Plan for the Review of Safety Analysis Reports for Nuclear Power Plants. This guidance endorses the use of American Society of Mechanical Engineers (ASME) NQA-1-1994, “Quality Assurance Program Requirements for Nuclear Facilities.”

The STP 3 & 4 QAPD is provided in Section 17.5S.

17.1 Quality Assurance During Design and Construction

The information in this section of the reference ABWR DCD, including all subsections, as modified by the STP Nuclear Operating Company Application to Amend the Design Certification rule for the U.S. Advanced Boiling Water Reactor (ABWR), "ABWR STP Aircraft Impact Assessment (AIA) Amendment Revision 3," dated September 23, 2010 is incorporated by reference with the following site-specific supplement.

The STP 3 & 4 QAPD for design, construction and operations is provided in FSAR Section 17.5S.

During STP 3 & 4 design and construction, prior to full implementation of the STP 3 & 4 QAPD, the approved STP Units 1 and 2 Operations Quality Assurance Plan (OQAP) is incorporated by reference for use on STP 3 & 4 (Re: STPNOC letter to NRC dated March 26, 2007; ML070940688).

17.2 Quality Assurance During the Operations Phase

The information in this section of the reference ABWR DCD is incorporated by reference with the following site-specific supplement.

The STP 3 & 4 QAPD is provided in FSAR Section 17.5S.

17.3 Reliability Assurance Program During Design Phase

The information in this section of the reference ABWR DCD, including all subsections, tables, and figures, is incorporated by reference with the following site-specific supplement, which addresses COL Information Items 17.2, 17.3, and 17.4 respectively.

The policy and implementation procedures for using Design Reliability Assurance Program (D-RAP) information are specified in Section 17.4S, Reliability Assurance Program.

The D-RAP organization, during completion of detailed design and equipment selection during the design phase, is provided in Section 17.4S.

Reliability assurance during the operations phase is described in Section 17.4S.

17.4S Reliability Assurance Program

An introduction to the objectives of the Reliability Assurance Program (RAP) including Design Reliability Assurance (D-RAP) is provided in Section 17.3. This section discusses post certification D-RAP and the transition to reliability assurance activities during operations.

Reliability assurance activities are implemented in two stages. Stage 1 encompasses D-RAP conducted during certification of the ABWR (described in Section 17.3) and the D-RAP for STP site specific design including procurement, construction, fabrication and testing leading up to initial fuel load. D-RAP is largely accomplished for NINA by the NSSS vendor and the architect engineer. ITAAC are provided for D RAP in Tier 1 Section 3.6.

Stage 2 reliability assurance activities are conducted principally by STPNOC and commence during the transition to fuel load and plant operation and are implemented concurrently with and as part of the Maintenance Rule (MR) program described in Section 17.6S and the other programs described below. The MR program is implemented 30 days prior to fuel load.

Stage 2 reliability assurance activities continue for the life of the plant and with the MR program are implemented using traditional programs for surveillance testing, inservice inspection, inservice testing, the general preventive maintenance program and the Quality Assurance Program. These programs are collectively coordinated and results evaluated under STPNOC's broader program initiatives for Plant Health and the Equipment Reliability Process (ERP).

17.4S.1 Identification of Site-Specific SSCs for D-RAP

The process described in the reference ABWR DCD Appendix 19K to identify risk significant systems, structures and components (SSCs) for the certified and approved ABWR was also used for initial identification of the site specific, risk-significant SSCs during COLA preparation. This was accomplished using the generic ABWR probabilistic risk assessment (PRA) model revised to include site-specific information.

The initial list of site specific SSCs and their risk rankings is included in Appendix 19K. The PRA model for STP 3 & 4 will continue to be refined over the life of the plant and this will require periodic adjustment to the risk rankings of SSCs in Appendix 19K. Appendix 19K also includes the initial maintenance/testing recommendations for these SSCs to enhance reliability.

As D-RAP enters the detailed design, procurement, fabrication and construction phase, an expert panel with NINA representation will be established and utilized to:

- augment PRA techniques in the risk ranking of SSCs using deterministic techniques, operating experience and expert judgment
- identify risk significant SSCs not modeled in the PRA (if any)
- act as the final approver of risk significant SSCs

- recommend design changes where appropriate to reduce risk
- revise/adjust recommend operations phase maintenance/testing activities for risk significant SSCs described in Appendix 19K
- designate and chair NSSS and Architect engineer working groups as necessary to assist in accomplishing the objectives of the expert panel
- review and approve the recommendations of the working groups
- assess the overall station risk impact due to SSC performance and all implemented risk-informed programs (including D-RAP) after each plant-specific data update of the PRA.

The expert panel is made up of members with diverse backgrounds in engineering, operations, maintenance, risk and reliability analysis, operating experience and work control. During the D-RAP process STPNOC will provide operations and maintenance expertise. During the detailed design phase of D-RAP, each major engineering organization performing detailed design will be represented on the panel (or working groups) as deemed necessary. The composition of the panel will change during the period leading up to fuel load and operations. The panel will continue to function during operations for the life of the plant under the MR program.

The results of the expert panel system reviews, completed using the method described in FSAR Subsection 17.4S.1.4, are used to designate, at the system level, the site specific SSCs which have been determined to be risk significant and within the scope of the D-RAP process, and supplement the initial list included in Appendix 19K. In general, the categorization of a system is determined by the highest categorized system function, and the same categorization is given to all components in the system. The expert panel may further refine the system level categorizations at the component level, by categorizing components based on the supported system functions and identifying critical attributes for components determined to be safety/risk significant, using the method described in Subsection 17.4S.1.4. The listing of risk-significant systems/SSCs is documented for use in the Master Equipment Database (MED) (see Subsection 17.4S.1.2.1) or other quality record (see Reference 2) pending MED development.

17.4S.1.1 Organization

17.4S.1.1.1 Program Formulation and Organizational Responsibilities

As the ABWR design certification applicant, General Electric (GE) was initially responsible for formulating D-RAP (Reference 1). This initial formulation is retained (unchanged) in Section 17.3 and the results of implementation during certification are provided in DCD Appendix 19K.

NINA's overall organization for STP 3 & 4 is described in Part II, Section 1 of the STP 3 & 4 Quality Assurance Program Description (QAPD). In a manner analogous to formulation of the QAPD, NINA's Senior Vice President, Oversight and Regulatory

Affairs, is responsible for formulating the STP 3 & 4 reliability assurance activities as described herein.

D-RAP is fundamentally an engineering program. NINA's Vice President, Engineering and Construction and Project Director, retains responsibility for reliability assurance activities during design and construction even though implementation will reside principally with Toshiba and other NINA contractors responsible for completion of detailed design and the development of engineering and procurement specifications. NINA has delineated D-RAP requirements expected of the Plant Designer including participation on the expert panel. The organizational relationships of NINA and NINA contractors are further described in Section 1.8 of the QAPD. The response to COL License information item 19.26 also discusses Organization and Staffing to oversee design and construction.

For stage 2, the organizational emphasis will shift from Engineering and Construction to Systems Engineering and Maintenance Engineering under the Maintenance Rule program. STP design engineering will continue to play a role in maintaining the Master Equipment Database (see 17.4S.1.2.1), configuration control and application of the design change process if necessary to improve SSC reliability.

The D-RAP Expert Panel is composed of a Chairman and additional senior level managers as designated by the Vice President, Engineering and Construction and Project Director. The Expert Panel membership may be augmented as determined by the Vice President, Engineering and Construction and Project Director. Any change to the Expert Panel membership requires approval of the Vice President, Engineering and Construction and Project Director.

The Risk and Reliability Analysis organization maintains representation on the expert panel and has major input to determinations that SSCs are maintaining performance levels consistent with PRA model assumptions over the life of the plant. Risk and Reliability Analysis reports to the Senior Vice President, Oversight and Regulatory Affairs who maintains organizational independence and when necessary has unfettered access to NINA CEO and the Board of Directors in all matters related to quality assurance.

17.4S.1.1.2 Reliability Assurance Interface Coordination

Reliability assurance activity interface issues are coordinated through the expert panel since the organizations involved have representation on the panel. Specific interface responsibilities of the panel members are detailed in a controlling procedure. These interface responsibilities include the following:

- The Plant Designer panel member maintains the design interface to ensure that any proposed design changes that involve risk significant SSCs modeled in the PRA are identified and periodically reviewed with the expert panel at a frequency determined by the panel.

- The Plant Designer panel member maintains the design interface to ensure that any proposed changes resulting in an increase in the deterministically established

risk of an SSC not modeled in the PRA, are identified and periodically reviewed with the expert panel at a frequency determined by the panel.

- The Plant Designer panel member maintains the design interface to ensure that any proposed changes to the plant PRA model, as identified by NINA Risk and Reliability representative on the expert panel, are appropriately reviewed for design impact and the results of the review appropriately distributed throughout the Plant Designer's and subcontractor's organizations.
- The Plant Designer panel member coordinates with the design organizations and expert panel members to ensure that significant design assumptions related to equipment reliability are realistic and achievable.
- The Risk and Reliability Analysis panel member is responsible to inform the panel of changes to the PRA model and advise other panel members on the potential impact of the change on SSC risk rankings, assumed reliability of SSCs for design activities and the need for adjustments to the MR program.

17.4S.1.1.3 Risk and Reliability Organization Input to the Design Process

The Risk and Reliability Analysis panel member is responsible to review and concur in design changes involving risk significant SSCs identified by the Plant Designer's expert panel member.

During implementation of the MR program prior to fuel load, responsibility for design and configuration control will transition from the Plant Designer to STPNOC. STPNOC's procedure for Design Change Packages ensures screening of proposed design changes to identify Risk Management review and approval when necessary.

17.4S.1.1.4 Risk and Reliability Organization Design Reviews

The Risk and Reliability Analysis organization's participation in periodic design reviews is principally via the PRA configuration control program that incorporates a feedback process to update the PRA model. These updates fall into two categories:

- The plant operating update incorporates plant design changes and procedure changes that affect PRA modeled components, initiating event frequencies, and changes in SSC unavailability that affect the PRA model. These changes will be incorporated into the model on a period not to exceed 36 months.
- The comprehensive data update incorporates changes to plant-specific failure rate distributions and human reliability, and any other database distribution updates (examples would include equipment failure rates, recovery actions, and operator actions). This second category will be updated on a period not to exceed 48 months.

The PRA model may be updated on a more frequent basis.

17.4S.1.2 Design Control

17.4S.1.2.1 Configuration Control of SSCs

The initial focal point for configuration control as it relates to D-RAP is the list of SSCs and their risk rankings in Appendix 19K. During detailed design for STP 3 & 4, NINA will be adopting a process similar to that used in STP 1 & 2 for a Master Equipment Database (MED). During the detailed design phase, populating this data base for the risk significant SSCs identified in Appendix 19K will be performed by the Expert Panel or associated working groups. The MED will be developed and maintained as a source of approved risk information for the station. A high level overview of this process is shown in Figure 17.4S 1.

17.4S.1.2.2 Design Change Feedback

The design control and change processes provide feedback to the Risk Management organization via identification of components on the MED that are affected by a proposed change. Those affected SSCs with high risk are given additional review in accordance with approved criteria to ensure there is no potential impact to the risk ranking of the affected components. If potential impact is identified then the Risk and Reliability Organization must concur in the change.

17.4S.1.2.3 Design Interface with Risk and Reliability Organization

Assurance that SSC performance relates to reliability assumptions made in the PRA and deterministic methods for identifying risk significant SSCs is provided by monitoring the performance of SSCs during plant operation and the review and feedback of Operating Experience. This interface occurs through implementation of the Maintenance Rule and the functioning of the expert panel (see Figure 17.4S-1).

As a designed, constructed and operating evolutionary plant, the ABWR has available a wide range of traditional sources for relevant operating information. These include industry and vendor equipment information that are applicable and available to the nuclear industry with the intent of minimizing adverse plant conditions or situations through shared experience. Sources include the NRC (Information Notices and Generic Letters), INPO (EPIX, NPRDS, Operating Events, Significant Event Reports etc.) and vendor documentation and NSSS supplier information.

17.4S.1.2.4 Engineering Design Controls for SSC Identification

Engineering design controls applied for determining the SSCs within the scope of the RAP are generally those specified in 10 CFR 50, Appendix B, Criterion III, Design Control. These include for example the use of procedures for establishing risk via deterministic methods, proceduralized criteria for PRA risk ranking and independent verification and peer checking of the inputs necessary for utilization (or when necessary modification) of the site specific PRA model.

17.4S.1.2.5 Alternative Design

The process for proposing changes to the design for risk significant SSCs is proceduralized via NINA Design Change Package process. This process includes the use of a detailed check list to establish the impact of the change on the PRA or deterministic evaluations performed to establish risk for affected SSCs. Changes identified as having an impact on SSCs and their risk rankings require appropriate special or interdisciplinary reviews.

17.4S.1.3 Expert Panel

The expert panel and designated working group(s) consist of designated individuals having expertise in the areas of risk assessment, operations, maintenance, engineering, quality assurance, and licensing.

As a minimum, the combined expert panel and working group(s) include at least three individuals with a minimum of five years experience at similar nuclear plants, and at least one individual who has worked on the modeling and updating of PRAs for a minimum of three years.

When utilized, expert panel representatives from contractor design organizations are required to have a minimum of three years experience establishing risk rankings for nuclear plant SSCs using PRA or deterministic techniques (which may include Failure Modes and Effects Analysis).

17.4S.1.4 Methods of Analysis for Risk Significant SSC Identification

As discussed in Section 17.4S.1, the process described in Appendix 19K to identify risk significant SSCs for the certified and approved ABWR was also used for initial identification of the site specific, risk-significant SSCs during COLA preparation.

The process for maintaining, revising and when necessary establishing new risk rankings for modified design is based on PRA and deterministic techniques. The process utilized in categorizing components consists of the following major tasks:

- Identification of functions performed by the subject plant system.
- Determination of the risk significance of each system function.
- Identification of the system function(s) supported by that component.
- Identification of a risk categorization of the component based on probabilistic risk assessment (PRA) insights (where the component is modeled).
- Development of a risk categorization of the component based on deterministic insights.
- Designation of the overall categorization of the component, based upon the higher of the PRA categorization and the deterministic categorization.

- Identification of critical attributes for components determined to be safety/risk significant.

The PRA and deterministic methods are described more fully below.

17.4S.1.4.1 PRA Risk Ranking

A component's risk determination is based upon its impact on the results of the PRA. STP's PRA calculates both core damage frequency (CDF) and containment response to a core damaging event, including large early release frequency (LERF). The PRA models internal initiating events at full power, and also accounts for the risk associated with external events, including external flooding, seismic events, and fire, internal flooding, and events occurring during low power and shutdown. The PRA risk categorization of a component is based upon its Fussell-Vessely (FV) importance, which is the fraction of the CDF and LERF to which failure of the component contributes, and its risk achievement worth (RAW), which is the factor by which the CDF and LERF would increase if it were assumed that the component is guaranteed to fail. Specifically, PRA risk categorization to identify SSCs is based upon the following:

PRA Ranking	PRA Criteria
HIGH (Risk Significant)	FV ≥ 0.005 or RAW ≥ 2.0
LOW (Non-risk Significant)	FV < 0.005 and RAW < 2.0

17.4S.1.4.2 Deterministic Risk Ranking

Components are subject to a deterministic categorization process, regardless of whether they are also subject to the PRA risk categorization process. This deterministic categorization process can result in an increase, but not a decrease (from the PRA risk) in a component's categorization.

A component's deterministic categorization is directly attributable to the importance of the system function supported by the component. In cases, where a component supports more than one system function, the component is initially classified based on the highest deterministic categorization of the function supported. In categorizing the functions of a system, five critical questions regarding the function are considered, each of which is given a different weight. These questions and their weight are as follows:

Question	Weight
Is the function used to mitigate accidents or transients?	5
Is the function specifically called out in the Emergency Operating Procedures (EOPs) or Emergency Response Procedures (ERPs)?	5
Does the loss of the function directly fail another risk-significant system?	4
Is the loss of the function safety significant for shutdown or mode changes?	3
Does the loss of the function, in and of itself, directly cause an initiating event?	3

Based on the impact on safety if the function is unavailable and the frequency of loss of the function, each of the five questions is given a numerical answer ranging from 0 to 5. This grading scale is as follows:

"0" — Negative response

"1" — Positive response having an insignificant impact and/or occurring very rarely

"2" — Positive response having a minor impact and/or occurring infrequently

"3" — Positive response having a low impact and/or occurring occasionally

"4" — Positive response having a medium impact and/or occurring regularly

"5" — Positive response having a high impact and/or occurring frequently

The definitions for the terms used in this grading scale are as follows:

Frequency Definitions

- Occurring Frequently - continuously or always demanded
- Occurring Regularly - demanded > 5 times per year
- Occurring Occasionally - demanded 1-2 times per cycle
- Occurring Infrequently - demanded < once per cycle
- Occurring Very Rarely - demanded once per lifetime

Impact Definitions

- High Impact - a system function is lost which likely could result in core damage and/or may have a negative impact on the health and safety of the public
- Medium Impact - a system function is lost which may, but is not likely to, result in core damage and/or is unlikely to have a negative impact on the health and safety of the public

- Low Impact - a system function is significantly degraded, but no core damage and/or negative impact on the health and safety of the public is expected
- Minor Impact - a system function has been moderately degraded, but does not result in core damage or negative impact on the health and safety of the public
- Insignificant Impact - a system function has been challenged, but does not result in core damage or negative impact on the health and safety of the public

Although some of these definitions are quantitative, both of these sets of definitions are applied based on collective judgment and experience.

The numerical values, after weighting, are summed; the maximum possible value is 100. Based on the sum, functions are categorized as follows:

SCORE RANGE	CATEGORY
100–41	HIGH (Risk Significant)
40–0	LOW (Non-risk Significant)

A function with a low categorization due to a low sum can receive a higher deterministic categorization if any one of its five questions received a high numerical answer. Specifically, a weighted score of 15 or more on any one question results in an HIGH categorization. This is done to ensure that a function with a significant risk in one area does not have that risk contribution masked because of its low risk in other areas.

In general, a component is given the same categorization as the highest categorized system function that the component supports. However, a component may be ranked lower than the associated system function based upon diverse and/or multiple independent means available to satisfy the system function.

17.4S.2 Procurement, Fabrication, Construction, and Test Specifications

Procurement, fabrication, construction, and test specifications for safety-related and nonsafety-related SSCs within the scope of RAP are prepared and implemented under the approved QAPD referenced in Section 17.5S. The approved QAPD describes the planned and systematic actions necessary to provide adequate confidence that SSCs will perform satisfactorily in service. These actions are applied to procurement, fabrication construction and test specifications.

Assumptions related to equipment reliability and availability are translated into verifiable attributes, defined characteristics and processes and are included in procurement, fabrication, and construction specifications such that deviations from these attributes, characteristics and processes may be identified and corrected.

Procedures describing equipment selection require consideration of the manufacturer's recommended maintenance activities and the manufacturer's time estimates for accomplishing these activities such that the equipment selected is able

to meet availability assumptions while in service, including conservative allowances for unplanned maintenance.

Test specifications will describe to the extent practical the actual conditions that will exist when SSCs are called upon to perform their risk significant functions and testing will document proper performance under the specified conditions when these conditions can be practically established in the field. When these conditions can not be duplicated, acceptance will be established based on qualification testing performed by the equipment vendor under controlled conditions.

The approved QAPD, Part II, applies 10 CFR 50 Appendix B requirements to safety-related SSCs. For nonsafety-related SSCs within the scope of RAP, Part III, Section 1 of the QAPD describes the process for selectively applying program controls to those characteristics or critical attributes that render the SSC a significant contributor to plant safety.

Part III, Section 2 of the QAPD specifies the quality requirements required for nonsafety related SSCs credited in mitigating defined events such as Anticipated Transients Without Scram (ATWS) and Station Blackout (SBO). When SSCs are risk significant due to their role in mitigating these defined events then the specified quality requirements for these SSCs will be satisfied. For example the combustion turbine generator (CTG) is in the scope of the RAP due to its importance in reducing the risk associated with SBO. Therefore the CTG will also meet the procurement, test and test control quality requirements described in Regulatory Position 3.5, "Quality Assurance and Specific Guidance for SBO Equipment That Is Not Safety Related," and Appendix A, "Quality Assurance Guidance for Non-Safety Systems and Equipment," in Regulatory Guide 1.155, "Station Blackout."

17.4S.3 Quality Assurance Implementation

Implementation of the QAPD during procurement, fabrication, construction and preoperation testing of SSCs is accomplished in accordance with written instructions, procedures or drawings of a type appropriate to the circumstances and which, where applicable, include quantitative or qualitative acceptance criteria. These procedures are either NINA implementing procedures, or supplier implementing procedures governed by a supplier quality program approved by NINA.

17.4S.4 Maintenance Rule/Operational Programs

The STPNOC MR program is described in Section 17.6S. Risk significant SSCs identified by reliability assurance activities are included in the MR program as high safety significance (HSS) components (Section 17.6S.1.1.b). The opportunity to judge SSC performance under the MR program is provided by the operational programs discussed in 17.6S.3, "Maintenance Rule Program Relationship With Reliability Assurance Activities."

Many SSCs would meet the criteria to be in the MR program without considerations related to the RAP. In cases where the RAP identifies a high risk SSC that would not otherwise have been in the MR program, then the SSC is added. For those SSCs

already in the Technical Specifications (TS), Inservice Inspection (ISI), or Inservice Testing (IST) programs, their performance under these programs is factored into the performance monitoring accomplished under the MR program.

In cases where a SSC requires periodic testing or inspection not already accommodated by an existing program, then special provisions will be made to accommodate the necessary testing or inspection; for example in the Preventive Maintenance (PM) program.

17.4S.4.1 Performance Goals

Reliability performance assumptions for SSCs are established under the MR at two levels of performance monitoring. The first level of performance monitoring (MR (a)(2)) establishes conservative criteria used to judge that SSCs are meeting expected performance objectives. For SSCs the performance monitoring criteria are established consistent with the reliability and availability assumptions used in the PRA. Failure to meet these objectives would trigger performance monitoring at the second level (MR (a)(1)) accompanied by the establishment of specific defined goals to return the component to expected performance levels (Section 17.6S.1.3). These specific defined goals also consider the reliability and availability assumptions used in the PRA.

17.4S.4.2 Feedback of Actual Equipment Performance and Operating Experience

The feedback mechanism for periodically evaluating reliability assumptions based on actual equipment, train or system performance is realized in the implementation of the MR program. Since the performance monitoring criteria established under the MR program are set consistent with the assumed reliability assumptions used in the PRA, the failure to meet these performance objectives (i.e., equipment , train or system place in MR (a)(1) category) requires an assessment of the assumed reliability as described in 17.4S.4.1 above. This assessment requires that the assumed reliability be reviewed to ensure it is reflective of actual STP and industry performance. The STPNOC process requires review by the Risk Analysis organization to concur that goals have been met before moving a component from an MR (a)(1) status back to an MR (a)(2) status.

17.4S.5 Non-safety SSC Design/Operational Errors

The process for providing corrective actions for design and operational errors that degrade nonsafety-related SSCs within the scope of RAP is procedurally defined. All SSCs (safety-related or nonsafety-related) with risk significance other than LOW are entered into the MR program as HIGH. The STPNOC MR program does not distinguish between a Maintenance Rule Functional Failure (MRFF) and a Maintenance Preventable Functional Failure (MPFF). Therefore, nonsafety-related SSCs that have experienced a MRFF attributable to a design or operating error (i.e. could not have been prevented by maintenance) are corrected using the corrective action process described in the QAPD of Section 17.5S. Under the STPNOC MR program, MRFFs require cause determination (may be an apparent cause determination) and corrective action is implemented to prevent recurrence.

17.4S.6 Procedure Control

Implementation of the reliability assurance activities is considered an activity affecting quality and the controls for procedures and instructions used to implement reliability assurance activities are specified in Part II (safety-related) and Part III (nonsafety-related risk significant) of the QAPD. In most cases where a single procedure describes the process for an activity that applies to both safety-related and nonsafety-related components (for example establishing the performance monitoring criteria for the Maintenance Rule or establishing risk significance for SSCs in RAP) a single procedure or procedures that meet the full quality program requirements of Part II will be utilized. For activities such as procurement, nonsafety-related SSCs in the RAP will be governed by Procedure Controls meeting the requirements of Part III, Section 1 of the QAPD.

Part III, Section 2 of the QAPD specifies the quality requirements required for nonsafety-related SSCs credited in mitigating defined events such as ATWS and SBO. When SSCs are risk significant due to their role in mitigating these defined events then the specified quality requirements for these SSCs will be satisfied. For example the CTG is in the scope of the RAP due to its importance in reducing the risk associated with SBO. Therefore the CTG will also meet the procedure control quality requirements described in Regulatory Position 3.5, "Quality Assurance and Specific Guidance for SBO Equipment That Is Not Safety Related," and Appendix A, "Quality Assurance Guidance for Non-Safety Systems and Equipment," in Regulatory Guide 1.155, "Station Blackout."

17.4S.7 Records

Implementation of the reliability assurance activities is considered an activity affecting quality and the generation of records associated with this activity will meet the requirements of the QAPD Part II, Section 17 and Part III, Section 1.17.

Records of Expert Panel decisions and supporting documents are retained as QA records in the STP Records Management System (RMS) and consist of:

- Expert Panel decisions and meeting minutes including dissenting opinions and resolutions
- Recommendations of the working groups

Each PRA model includes two Reference Models for power operation and shutdown. For each Reference Model documentation is maintained that includes sources of input data, modeling techniques, and assumptions used in the analysis. These documents are maintained in RMS for the life of the plant.

Part III, Section 2 of the QAPD specifies the quality requirements required for nonsafety-related SSCs credited in mitigating defined events such as ATWS and SBO. When SSCs are risk significant due to their role in mitigating these defined events then the specified quality requirements for these SSCs will be satisfied. For example the CTG is in the scope of the RAP due to its importance in reducing the risk associated with SBO. Therefore the CTG will also meet the Records requirements described in

Regulatory Position 3.5, "Quality Assurance and Specific Guidance for SBO Equipment That Is Not Safety Related," and Appendix A, "Quality Assurance Guidance for Non-Safety Systems and Equipment," in Regulatory Guide 1.155, "Station Blackout."

17.4S.8 Corrective Action Process

Under the STPNOC process for MR implementation, any SSC experiencing a MRFF requires use of the Corrective Action process to document the failure, its cause determination and actions to preclude recurrence. As previously discussed in Section 17.4S.5, this also includes nonsafety-related SSCs.

Other failures of SSCs that are not MRFFs will be documented and corrected as described by the QAPD, Part II, Section 16 and Part III, Section 1.16.

Part III, Section 2 of the QAPD specifies the quality requirements required for nonsafety-related SSCs credited in mitigating defined events such as ATWS and SBO. When SSCs are risk significant due to their role in mitigating these defined events then the specified quality requirements for these SSCs will be satisfied. For example the CTG is in the scope of the RAP due to its importance in reducing the risk associated with SBO. Therefore the CTG will also meet the Corrective Action requirements described in Regulatory Position 3.5, "Quality Assurance and Specific Guidance for SBO Equipment That Is Not Safety Related," and Appendix A, "Quality Assurance Guidance for Non-Safety Systems and Equipment," in Regulatory Guide 1.155, "Station Blackout."

17.4S.9 Audit Plans

The reliability assurance activities are collectively accomplished by programs related to design, procurement, fabrication, construction, preoperational testing, PRA modeling and PRA risk assessment, deterministic evaluations from the expert panel, maintenance rule, Technical Specifications and other operational programs and the corrective action program. These programs are subject to audit as described in the QAPD.

Part III, Section 2 of the QAPD specifies the quality requirements required for nonsafety related SSCs credited in mitigating defined events such as ATWS and SBO. When SSCs are risk significant due to their role in mitigating these defined events then the specified quality requirements for these SSCs will be satisfied. For example the CTG is in the scope of the RAP due to its importance in reducing the risk associated with SBO. Therefore the CTG will also meet the audit requirements described in Regulatory Position 3.5, "Quality Assurance and Specific Guidance for SBO Equipment That Is Not Safety Related," and Appendix A, "Quality Assurance Guidance for Non-Safety Systems and Equipment," in Regulatory Guide 1.155, "Station Blackout."

17.4S.10 COL License Information

COL License Information Items 17.2, 17.3 and 17.4 are addressed as follows:

17.2 Policy and Implementation Procedures for D-RAP:

It is the policy of NINA to ensure that SSC reliability is properly considered and designed into the plant and is implemented through the reactor design, procurement, fabrication, construction, and preoperational test activities and programs. This policy is accomplished within the framework of the Quality Assurance Program Description (QAPD) including the development, approval and control of implementing procedures. Details are provided in Section 17.4S Reliability Assurance Program.

17.3 D-RAP Organization:

See Section 17.4S.1.1 for a discussion of the Organizational elements associated with D RAP and RAP during the Operations phase.

17.4 Provisions for Reliability Assurance during Operation:

The provisions for Reliability Assurance during Operations are described in Section 17.4S Reliability Assurance Program and 17.6S Maintenance Rule.

17.4S.11 References

17.4S.11-1 SECY 95-132, "Policy and Technical Issues Associated with the Regulatory Treatment of Non-Safety Systems (RTNSS) in Passive Plant Designs (SECY 94-084)," Attachment 2, Item E. Reliability Assurance Program.

17.4S.11-2 D-RAP Systems Review, May 25, 2011, STI No. 32962928.

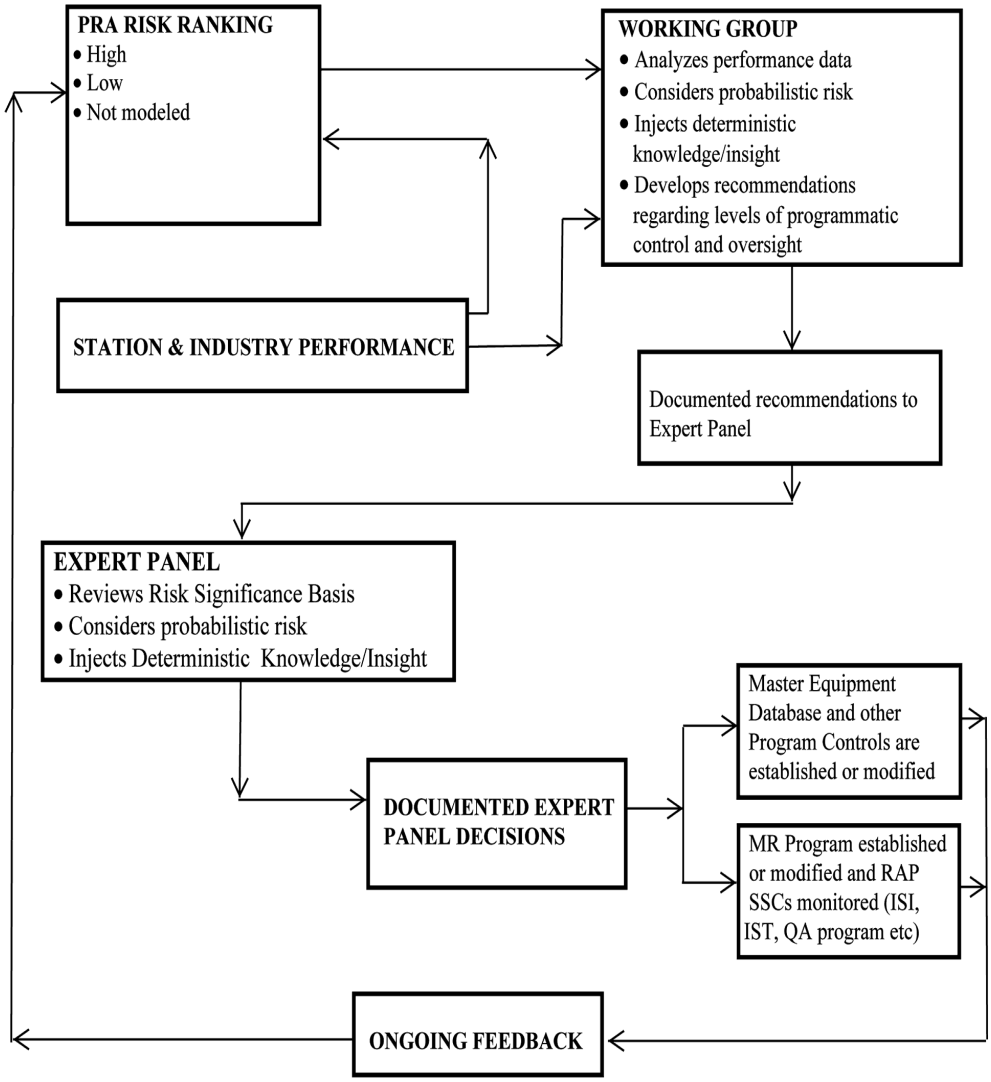

Figure 17.4S-1 Reliability Assurance Process

Note 1: Maintenance Rule program implemented 30 days prior to fuel load

Note 2: Working group(s) are chaired by an Expert Panel member

17.5S Quality Assurance Program Guidance

The Quality Assurance Program Description has been submitted as a separate document titled “STP 3 & 4 Quality Assurance Program Description.”

17.6S Maintenance Rule Program

Nuclear Energy Institute Report No. NEI 07-02A, Rev.0 (Corrected), dated November 2010, "Generic FSAR Template Guidance for Maintenance Rule Program Description for Plants Licensed Under 10 CFR Part 52" provides the Maintenance Rule Program for STP 3 & 4. This NEI template is incorporated by reference with the following site-specific supplements. The NEI template material is shown in italics with supplemental information shown as regular font underlined. The numbering convention utilized by the NEI Template is maintained in this Section, with “6S” substituted for “X” where it appears in the template numbering.

17.6S.1.1b

All SSCs identified as risk-significant via the Reliability Assurance Program for the design phase (DRAP - see FSAR Section 17.3 and 17.4S) *are included within the initial MR scope as HSS SSCs.*

17.6S.1.2 Monitoring and corrective action per 10 CFR 50.65(a)(1)

SSCs within the scope of the MR are initially classified as (a)(2) (ref. Section 17.6S.1.3), *except where it is determined that an SSC should be initially classified as (a)(1), e.g., an SSC that fails during start-up testing.*

SSCs that do not meet performance criteria established for (a)(2) monitoring (ref. Section 17.6S.1.3) *are evaluated for (a)(1) classification in accordance with MR program procedures, with recommended corrective actions identified as appropriate.*

17.6S.1.3 Preventive maintenance per 10 CFR 50.65(a)(2)

Preventive maintenance is subject to risk assessment and management per 10 CFR 50.65(a)(4) (ref. Section 17.6S.1.5).

17.6S.3 Maintenance Rule Program Relationship With Reliability Assurance Activities

Reliability during the operations phase is assured through the implementation of operational programs, i.e., the MR program, the Quality Assurance Program, inservice inspection and testing programs, the Technical Specifications surveillance test program, and the preventive maintenance program. See sections:

- 3.9.6 Testing of Pumps and Valves (inservice)
- 5.2.4 Preservice and Inservice Inspection and Testing of Reactor Coolant Pressure Boundary
- 6.6 Preservice and Inservice Inspection and Testing of Class 2 and 3 Components and Piping
- 16.0 Technical Specifications
- 17.5S Quality Assurance Program Description