Figure 7.1-2 Deleted

Figure 7.1-3 ESBWR Distributed Power-Sensor/Logic Diversity Diagram

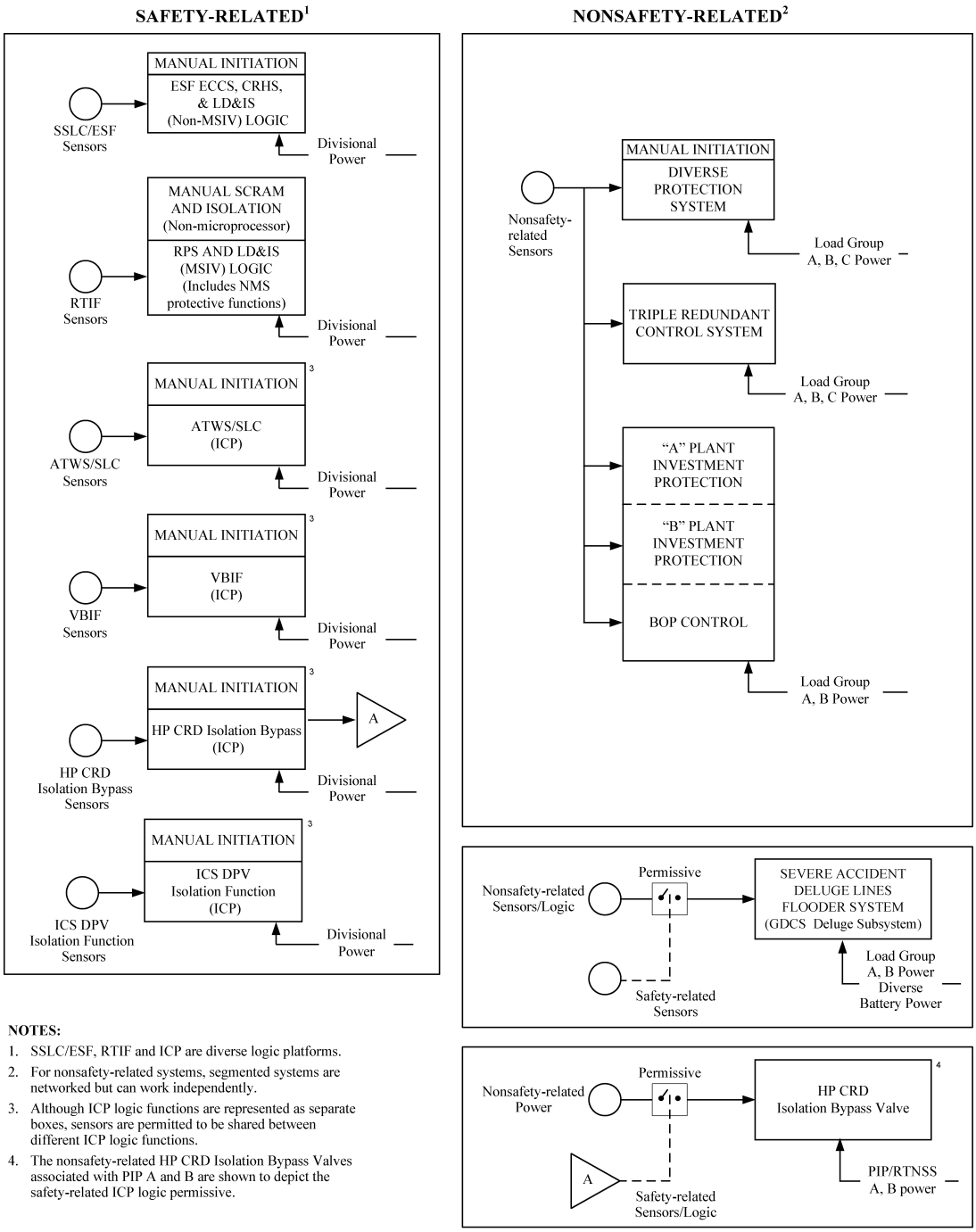

NOTES:

1. SSLC/ESF, RTIF and ICP are diverse logic platforms.
2. For nonsafety-related systems, segmented systems are networked but can work independently.
3. Although ICP logic functions are represented as separate boxes, sensors are permitted to be shared between different ICP logic functions.
4. The nonsafety-related HP CRD Isolation Bypass Valves associated with PIP A and B are shown to depict the safety-related ICP logic permissive.

Figure 7.1-4 ESBWR Hardware/Software (Architecture) Diversity Diagram

Safety Category	Safety-Related			Nonsafety-Related						
	Q-DCIS			N-DCIS						
Platform/Network Segment	RTIF NMS	SSLC/ESF	Independent Control Platform	GENE		PIP A/B	BOP		PCF	
Architecture	Divisional	Divisional	Divisional	Triple Redundant (DPS)	Dual Redundant	Dual Redundant	Triple Redundant	Dual Redundant	Workstations	PLC (Deluge)

NOTE: Crosshatching denotes different platforms or networks.

7.2 Reactor Trip System

The Reactor Trip System includes the Reactor Protection System (RPS), the Neutron Monitoring System (NMS), and the Suppression Pool Temperature Monitoring (SPTM) functions. These systems are discussed below in Subsections 7.2.1, 7.2.2 and 7.2.3, respectively.

7.2.1 Reactor Protection System

7.2.1.1 System Bases

The RPS safety-related design bases are the following:

- To initiate an automatic safe shutdown of the reactor (also known as reactor trip) by means of rapid hydraulic insertion of all control rods (scram) when:
  - Anticipated operational occurrences (AOO) (transient) anomalous states occur, which potentially impair reactor safety.
  - Errors in operation take place resulting in transients that potentially impair reactor safety.
- To initiate reactor power reduction and safe shutdown of the reactor by means of rapid hydraulic insertion of a pre-defined group of the control rods. Several groups can be defined and scrammed in sequence. This feature is called Select Rod Insert (SRI) and is initiated by reliable signals from the Diverse Protection System (DPS).
- To provide timely protection against the onset and effects of conditions threatening the integrity of the reactor fuel barriers, the reactor coolant pressure boundary (RCPB), or containment vessel pressure boundary. This limits the uncontrolled release of radioactive materials from the fuel assembly or the RCPB. Also to provide such protection against conditions that threaten important plant equipment integrity.
- To initiate an automatic reactor trip whenever monitored process variables exceed or fall below their specified trip setpoints based on values determined by AOO, accident analyses, and instrument setpoint calculation methodology.
- To provide control switches for initiation of manual reactor scram by the plant operator.
- To provide reactor mode selection for enabling the appropriate instrument channel trip functions required in a particular mode of plant operation. Mode selection also provides for bypassing instrument channel trip functions that are not required and for establishing other necessary interlocks associated with the major plant operating modes.
- To provide selective automatic and manual operational trip bypasses, as necessary, to permit proper plant operations. These bypasses allow for protection requirements depending upon specific existing or subsequent reactor operating conditions.
- To provide seal-in of specific trip logic paths after trip conditions have been satisfied and to inhibit the trip reset, as necessary, to ensure subsequent required protective action sequences are completed.

- To provide manual reset capability permitting restoration of the RPS and other affected systems to their normal operational status following seal-in of any trip logic path or after a full reactor scram.
- To provide isolated outputs to other systems sharing instrument channel signals with the RPS, using trip signals generated by the RPS, or requiring other indications of specific RPS status for their inputs.
- To provide isolated outputs to appropriate warning, trip, or bypass alarm annunciators to operator displays (for example, flat panel or cathode ray tube [CRT] displays) and to the plant computer functions (PCF) of the Nonsafety-related Distributed Control and Information System (N-DCIS).
- To provide means for calibration and adjustment of trip function setpoints and to provide sufficient controls to permit surveillance and post-maintenance testing of RPS equipment.

The following bases ensure that the RPS is designed with sufficient reliability:

- Single failures, bypasses, repairs, calibration, or adjustments do not impair the normal protective functions of the RPS and do not result in inadvertent reactor scram or insertion of control rods. The RPS is capable of accomplishing its protection functions in the presence of any single failure within the RPS (with any three of the four divisions of safety-related power available), any failures caused by a single failure, and any failure caused by any design basis event requiring RPS protective action.
- The RPS is designed to cause reactor scram even during system shutdown and loss of electrical power sources.
- The RPS fails into a safe state if conditions such as disconnection of the system (or portions of the system), loss of electrical power, or adverse environment are experienced.
- Loss of a single power source directly associated with RPS equipment and protection functions does not cause instrument channel trips, division trips, or scram solenoid de-energization resulting in full reactor scram or insertion of any control rod.
- Once initiated, RPS protective actions continue in their intended sequence until completion of hydraulic control rod insertion. The RPS trip is sealed-in and can only be reset manually. All manual resets are automatically inhibited for 10 seconds to allow sufficient time for scram completion.
- The RPS has built-in redundancy in its design that fulfills the reliability and availability requirements of the system.
- The RPS has bypass capability for failed portions of each division's equipment without degrading operability.
- A separate and diverse manual trip function is provided through the use of two manual-trip switches. Actuation of both manual-trip switches is required for a full reactor scram.

- Physical separation and electrical isolation between redundant divisions of the RPS are provided by separate process instrumentation, separate racks, and separate or independent panels and cabling. Separate equipment rooms in the Control Building (CB) perform this function.

The following features reduce the probability that RPS operational reliability is degraded by operator error.

- Access to trip settings, calibration controls, test points, and other terminal points are under the control of Operations supervisory personnel.
- Manual bypass of components is under the control of the main control room (MCR) operator. Any bypass of safety-related parts of the system is continuously indicated in the MCR. The design does not allow more than one division to be bypassed at a time.
- Selective automatic and manual trip bypasses are provided to permit proper plant operation.
- Controls for manual initiation of reactor scram by the plant operator are provided.
- A Reactor Mode Switch is provided to select the plant operation mode. This switch sends bypass and interlock signals to the RPS, instruments, and hardware.

7.2.1.2 System Description

7.2.1.2.1 Reactor Protection System Identification

The RPS is the overall collection of instrument channels, trip logics, trip actuators, manual controls, and scram logic circuitry. This collection initiates rapid insertion of control rods to shut down the reactor when situations and circumstances arise that could result in unsafe reactor operating conditions. The RPS also establishes appropriate interlocks for different reactor operating modes and provides status and control signals to other systems and alarms.

To accomplish its overall function, the RPS interfaces with the:

- Safety-Related Distributed Control & Information System (Q-DCIS)
- Safety System Logic and Control / Engineered Safety Features (SSLC/ESF)
- NMS
- Nuclear Boiler System (NBS)
- Control Rod Drive (CRD) System
- Containment Monitoring System (CMS) (including the SPTM function)
- Rod Control and Information System (RC&IS)
- Leak Detection and Isolation System (LD&IS)
- Isolation Condenser System (ICS)
- Steam Bypass and Pressure Control System (SB&PC System)

- Plant Automation System (PAS)
- MCR panels
- N-DCIS
- DPS
- Uninterruptible Alternating Current (AC) Power Supply System
- Raceway System

The RPS hardware/software platform is diverse from SSLC/ESF and DPS. RPS has a separate set of sensors from SSLC/ESF, and a diverse set of sensors from DPS.

A simplified RPS functional block diagram is provided in Figure 7.2-1; a more detailed diagram representing the RPS data flow and configuration is provided in Figures 7.2-11a and 7.2-11b. A simplified RPS interfaces and boundaries diagram is provided in Figure 7.2-2.

7.2.1.2.2 Reactor Protection System Classification

The RPS is classified as a safety-related system. The functions and components of the RPS are safety-related unless otherwise indicated. The RPS electrical equipment also is classified as Seismic Category I and as IEEE electrical category safety-related.

7.2.1.2.3 Power Sources

AC electric power required by the four divisions of RPS logic is supplied from four pairs of physically separate, electrically independent, uninterruptible, safety-related 120 VAC buses. Either UPS of the divisional power source supports the RPS division. Two divisions of the safety-related 120 VAC also are used as the power sources for the solenoids of the scram pilot valves.

7.2.1.2.4 Reactor Protection System Equipment Design

The RPS is designed to provide reliable, single failure proof capability to automatically or manually initiate a reactor scram while maintaining protection against unnecessary scrams resulting from single failures. The RPS satisfies the single failure criterion even when one entire division of sensors is bypassed or when one of the four automatic RPS trip logic systems is out of service (with any three of the four divisions of safety-related AC power available). This is accomplished through the combination of fail-safe equipment design, redundant sensor division trip decision logic, and redundant two-out-of-four trip system output scram logic. The dual two-out-of-four arrangement used in the RPS design ensures that the single failure criterion is incorporated.

Equipment within the RPS is designed to fail into a trip-initiating state upon loss of power, loss or disconnection of any input signal, or loss of any internal or external device-to-device connection signal. The failure does not affect trip bypass logic signals or trip bypass permissive logic signals.

The design of the RPS includes two operator-controlled bypasses: the "division of sensors" and the "division of logic (division out of service)" bypasses. These are independently controlled by

separate fiber-optic "joystick" switches allowing the operator to insert the bypass into only one division at a time. There is no combination of operator bypasses that can reduce the redundancy of the RPS system below the requirements of IEEE Std. 603 Sections 6.7 and 7.5. The system is able to scram the reactor if any two like and un-bypassed parameters exceed their trip values. The required scram capability is maintained even if the RPS back panel chassis are keylock-disabled (not an operator function).

7.2.1.2.4.1 **Arrangement**

The RPS-related equipment is divided into four redundant divisions of sensor (instrument) channels, trip logics, and trip actuators as well as two divisions of manual scram controls and scram logic circuitry. The sensor channels, divisions of trip logic, divisions of trip actuators, and associated portions of the divisions of scram logic circuitry together constitute the RPS automatic scram and backup scram initiation logic. The divisions of manual scram controls and associated portions of the divisions of scram logic circuitry together constitute the RPS manual scram and backup scram initiation logic.

The automatic and manual scram initiation logics are independent of each other and use diverse methods and equipment to initiate a reactor scram. A functional equipment arrangement is shown in Figure 7.2-1.

Sensor Channels: Equipment within a sensor channel consists of sensors (transducers or switches), a Digital Trip Module (DTM), and multiplexers. The sensors within each channel detect abnormal operating conditions and send analog (or discrete) output either directly to the RPS cabinets or to the Reactor Trip and Isolation Function (RTIF) Remote Multiplexer Units (RMUs) within the associated division of the Q-DCIS. The RMU within each division performs signal processing including analog-to-digital conversion, then sends the digital or digitized analog output values of the monitored variables to the DTM for trip determinations within the associated RPS sensor channel in the same division. The DTM in each sensor channel compares individual monitored variable values with trip setpoint values. For each variable the DTM sends a separate trip/no trip output signal to the functional Trip Logic Units (TLU) in the four divisions of trip logic. DTM signals sent from one division to other divisions are isolated optically using fiber-optic cables. The DTMs and TLUs are micro-processor-based modules of the RPS.

The software associated with RPS channel trip and trip system coincident logic decisions installed in these modules is RPS unique. The number of sensors used in the functional performance of the RPS is shown in Table 7.2-1.

Q-DCIS equipment within a single division of sensor channels is powered from the safety-related power source of the same division. However, different pieces of equipment are powered from separate low-voltage DC power supplies within the panels belonging to the same division. Within a sensor channel, the sensors themselves are components of the RPS or components of an

interfacing system. Signal conditioning and distribution performed by the RMUs are functions of the Q-DCIS.

Components within each of the four RPS sensor channels are separated physically and are independent from components of other sensor channels. The RPS equipment is independent and physically separated from other safety-related or nonsafety-related systems fulfilling the requirements of IEEE Std. 603, Section 5.6.

Any signal communication between the RPS and other systems is through the required safety-related isolation devices (the safety-related fiber-optic communication interface modules [CIMs]). There are no signal inputs from other systems affecting the safety function of the RPS. The application of this nonsafety-to-safety interface is described in Subsection 7.1.3.3. The transfer of data between the safety-related system and nonsafety-related system is one-way.

Divisions of Trip Logic: Equipment within an RPS division of trip logic consists of TLUs, manual switches, Bypass Units (BPUs), and Output Logic Units (OLUs).

The TLUs perform the automatic scram initiation logic checking for two-out-of-four coincidence of trip conditions in any set of instrument channel signals coming from the four divisions of DTMs, or when a NMS-isolated digital trip signal (voted two-out-of-four in the NMS TLU) is received. The automatic scram initiation logic for any trip is based on the reactor operating mode switch status, channel trip conditions, NMS trip input, and bypass conditions. Each TLU, in addition to receiving the signals described above, also receives digital input signals from the BPU and other control interfaces in the same division. Signals from one RPS division to another RPS division are isolated optically using fiber-optic cables.

The various manual switches provide the operator with the means to enforce interlocks within RPS trip logic for special operation, maintenance, testing, and system reset. The BPUs perform bypass and interlock logic for the division of channel sensors bypass and the division of logic bypass. Each RTIF BPU sends its divisional sensor bypass signal to the TLU of the same division and an isolated divisional sensor bypass signal to the TLUs of the other three divisions. Each RTIF BPU sends its divisional logic bypass signal to the OLUs of the same division and an isolated divisional logic bypass signal to the OLUs of the other three divisions.

The OLUs perform division trip, seal-in, reset, and trip test functions. Each OLU receives bypass inputs from the RTIF BPU and trip inputs from the TLU of the same division. Each OLU provides trip outputs to the trip actuators.

Equipment within a division of trip logic is powered from the same division of safety-related power source. However, different pieces of equipment are powered from separate low-voltage DC power supplies in the same division.

Divisions of Trip Actuators: Equipment within a division of trip actuators includes load drivers for automatic primary scram and initiation of backup scram. The RPS includes two physically separate

and electrically independent divisions of trip actuators receiving inputs from the four divisions of the OLU. The load drivers are isolated, solid-state, current-interrupting devices with fast response times and are used for the primary scram actuators. The primary scram actuators are powered by 120 VAC and can tolerate the high current levels associated with Hydraulic Control Unit (HCU) scram solenoid operation.

The operation of the load drivers is such that a trip signal on the input side creates a high impedance current-interrupting condition on the output side. The output side of each load driver is isolated electrically from its input signal. The load driver outputs are arranged in the primary scram logic circuitry between the scram solenoids and scram solenoid 120 VAC power source. When in a tripped state, the load drivers cause the scram solenoids (scram initiation) to de-energize. The load drivers within a division interconnect with the OLU of all other divisions to form a special arrangement (connected in series and in parallel in two separate groups) that results in two-out-of-four scram logic. Reactor scram occurs if load drivers associated with any two or more divisions receive trip signals from the OLUs (Refer to Figure 7.2-1).

Output contactors are used for backup scram actuators, scram-follow initiation, and scram reset permissive actuators. When in a tripped state, the output contactors for backup scram cause the valve solenoids to energize. The output contactors of the backup scram are arranged in a two-out-of-four configuration similar to that described above for the primary scram load drivers. Backup scram is separate and independent in power source and function from primary scram.

Divisions of Manual Scram Controls: Equipment within a division of manual scram controls includes manual switches, contactors, and relays providing an alternate, diverse, manual means to initiate a scram and backup scram. Each division's manual scram function controls the power sources to the same division of scram logic circuitry for scram initiation and division of scram logic circuitry for backup scram initiation.

Divisions of Scram Logic Circuitry: The two divisions of primary scram logic circuitry are powered from independent and separate power sources. One of the two divisions of scram logic circuitry distributes Division 1 safety-related 120 VAC power to the A solenoids of the HCUs. The other division of scram logic circuitry distributes Division 2 safety-related 120 VAC power to the B solenoids of the HCUs. The HCUs (including the scram pilot valves and the scram valves) are components of the CRD System. A full scram of control rods associated with a particular HCU occurs when both A and B solenoids of the HCU are de-energized. The arrangement of equipment groups within the RPS from sensors to actuator loads is shown in Figure 7.2-1. The RPS interfaces and boundaries with other systems are shown in Figure 7.2-2.

7.2.1.2.4.2 Initiating Circuits

The RPS logic initiates a reactor scram in the individual sensor channels when any one or more of the conditions listed below exist. The system monitoring the associated process condition is found in the system indicated in brackets. These conditions are:

- High drywell pressure [CMS].
- Turbine stop valve (TSV) closure [RPS].
- Turbine control valve (TCV) fast closure [RPS].
- NMS-monitored SRNM and APRM conditions exceed acceptable limits [NMS].
- High reactor pressure [NBS].
- Low reactor pressure vessel (RPV) water level (Level 3) decreasing [NBS].
- High RPV water level (Level 8) increasing [NBS].
- Main steam line isolation valve (MSIV) closure (Run mode only) [NBS].
- Scram accumulator charging water header pressure - low-low [CRD].
- High suppression pool temperature [CMS].
- High condenser pressure [RPS].
- Power generation bus loss (Loss of all feedwater [FW] flow)(Run mode only) [RPS].
- High simulated thermal power (FW temperature biased) [NBS and NMS].
- Feedwater temperature exceeding allowable simulated thermal power vs. FW temperature domain [NBS].
- Operator-initiated manual scram [RPS].
- Reactor Mode Switch in Shutdown position [RPS].

With the exception of the NMS outputs, the MSIV closure, TSV closure and TCV fast-closure, loss of all FW flow due to a power generation bus loss, main condenser pressure high, and manual scram outputs, systems provide sensor outputs through the RTIF RMU.

The MSIV Closure, TSV closure and TCV fast-closure, loss of all FW flow due to a power generation bus loss, manual scram output, and main condenser pressure high signals are provided to the RPS through hardwired connections. The NMS trip signal is provided to the RPS through fiber-optic cable. The systems and equipment providing trip and scram initiating inputs to the RPS for these conditions are discussed in the following subsections.

Neutron Monitoring System

The separate and isolated NMS digital Startup Range Neutron Monitor (SRNM) trip signals, and Average Power Range Monitor (APRM) trip signals from each of the four divisions of the NMS equipment are provided to their divisions of RPS trip logic as shown on Figure 7.2-1.

SRNM Trip Signals: The safety-related SRNM subsystem provides trip signals to the RPS to cover the range of plant operation from source range through startup range (more than 10% of reactor rated power). Three SRNM conditions, monitored as a function of the NMS, comprise the SRNM trip logic output to the RPS. These conditions are:

- SRNM upscale (high count rate)
- Short (fast) period
- SRNM inoperative

The three trip conditions from every SRNM associated with a NMS division are combined into a single SRNM trip signal for that division. The specific condition causing the SRNM trip output state is identified by the NMS. The SRNM trip functions are summarized in Table 7.2-2. SRNM trip signals are summarized in Table 7.2-3.

APRM Trip Signals: The APRM trip signals cover the range of plant operation from a few percent of reactor rated power to greater than rated power. Three APRM conditions, monitored as a function of the NMS, comprise the APRM trip logic output to the RPS. These conditions are:

- APRM high thermal neutron flux
- High simulated reactor thermal power
- APRM inoperative

The APRM trip functions are summarized in Table 7.2-4.

Within the safety-related APRM subsystem there is the Oscillation Power Range Monitor (OPRM) function, which is capable of generating a trip signal in response to core thermal neutron flux oscillation conditions, and thermal-hydraulic instability fast enough to prevent cladding thermal limit violation and fuel damage. This OPRM trip signal is combined with the other three APRM trip signals to form the final APRM trip signal to the RPS. The NMS also provides the RPS with a simulated reactor thermal power signal to support the load rejection bypass algorithm.

Nuclear Boiler System

Reactor Pressure: Reactor pressure is measured by four physically separate pressure sensors mounted on separate divisional local racks in the safety envelope within the Reactor Building (RB). Each sensor is on a separate instrument line and is associated with a separate RPS electrical division. Each sensor provides an analog output signal to the RTIF RMU, which digitizes and conditions the signal before sending it to the appropriate RTIF DTM in one of the four RPS divisional sensor channels. The four pressure sensors and associated instrument lines are components of the NBS.

Reactor Pressure Vessel Water Level: RPV water level is measured by four physically separate level (differential pressure) sensors mounted on separate divisional local racks in the safety envelope within the RB. Each sensor is on a separate pair of instrument lines and is associated with a separate RPS electrical division. Each sensor provides an analog output signal to the RTIF RMU, which digitizes and conditions the signal before sending it to the appropriate DTM in one of the four RPS divisional sensor channels. The four separate level sensors and associated instrument lines are components of the NBS.

Main Steamline Isolation Valve Closure: Each of the four Main Steam Lines (MSLs) can be isolated by closing either its inboard or outboard isolation valve. Position (limit) switches with contacts are mounted on both isolation valves of each MSL. These switches with contacts provide output to the appropriate DTM or RMU in one of the four RPS divisional trip channels using hardwired connections. On each MSL, two position switches with contacts are mounted on each inboard isolation valve and each outboard isolation valve. Each of the two position switches with contacts on any one MSL isolation valve is associated with a different RPS divisional sensor channel. A reactor scram is initiated by either the inboard or outboard valve closure on two or more of the MSLs. The eight MSIVs and the 32 position switch contacts supplied with these valves (for RPS use) are components of the NBS.

Feedwater Temperature Biased Simulated Thermal Power: FW temperature is measured by four separate temperature sensors mounted on each FW line in the MSL tunnel area within the RB. Each sensor is connected to a separate channel and is associated with a separate RPS electrical division. Each sensor provides a temperature signal to the RTIF RMU, which digitizes and conditions the signal before sending it to the appropriate RTIF DTM. The eight temperature sensors (four on each FW line) are components of the NBS. The RPS uses FW temperature from NBS to develop a Simulated Thermal Power high setpoint that is a function of FW temperature.

Simulated Thermal Power Biased Feedwater Temperature: The RPS uses the Simulated Thermal Power signal from NMS and feedwater temperature from NBS as described in the paragraph above to generate a high/low feedwater temperature setpoint that is a function of Simulated Thermal Power. The RPS initiates a scram when the FW temperature further departs from the area allowed by the thermal power vs. FW temperature domain.

Control Rod Drive System

Locally mounted pressure sensors measure the scram accumulator charging water header pressure at four physically separate locations. Each sensor is associated with a separate RPS division and is on a separate instrument line. Each sensor provides an analog output signal to the RMU, which digitizes and conditions the signal before sending it to the appropriate DTM (in one of the four RPS divisional trip channels). The four pressure sensors and associated instrument lines are components of the CRD System. This is an anticipatory scram because it initiates a scram before the scram accumulators have time to depressurize.

Reactor Protection System

Turbine Stop Valve Closure: TSV closure is detected by separate valve stem position switches on each of the four valves. Each position switch provides an open/close contact output signal through hardwired connections to the DTM in one of the four RPS divisional trip channels. The TSV closure trip occurs in each division of trip logic when any two or more position switches detect the TSV

closure. The TSVs are components of the main turbine. The position switches are components of the RPS.

Turbine Control Valve Fast Closure: Low oil pressure in the hydraulic trip system, which is indicative of TCV fast-closure, is detected by separate pressure sensors on each of the four TCV hydraulic mechanisms. Each pressure sensor provides a 4 - 20 mA signal through hardwired connections to the DTM in each of the four RPS divisional trip channels. The TCV closure trip occurs in each division of trip logic when any two or more sensor channels detect low oil pressure in the hydraulic trip system. The TCV hydraulic mechanisms are components of the main turbine. The pressure sensors are components of the RPS.

Turbine Bypass Valve Position: The Turbine Bypass Valves (TBV) provide position limit switch inputs to the RPS as a permissive to inhibit reactor trip on TSV closure or TCV fast closure if the TBVs open to their 10% position within a defined period of time. One switch with four sets of contacts is mounted on each valve. Each contact is associated with one of the four RPS divisions to permit two-out-of-four logic. The position switches are components of the RPS.

High Condenser Pressure: High condenser pressure is detected by separate pressure sensors mounted on the main condenser. Each pressure sensor provides an analog output signal through hardwired connections to the DTM in each of the four RPS divisional trip channels. The pressure sensors are components of the RPS. The reactor scram at high condenser pressure shuts off steam flow to the main condenser and protects the main turbine. This is an anticipatory scram in that high condenser pressure also trips the main turbine and prevents TBV operation.

Power Generation Bus Loss (Loss of All Feedwater Flow Event): The plant electrical system has four power generation buses operating at 13.8 kV. Although all four buses are normally energized, the loads on these buses are arranged such that any three of the four buses can support the necessary FW pumps required for power generation. Specifically, these buses supply power for the FW pumps and circulating water pumps. In the Run mode at least three of the four buses must be powered.

If the sensor (one per division) on each bus detects a low voltage, indicating that less than three buses are operating, the two-out-of-four logic initiates a scram after a preset delay time. This delay time (less than one second) is to allow the auto transfer from the Unit Auxiliary Transformer (UAT) feed to the Reserve Auxiliary Transformer (RAT) feed to restore normal bus voltages. Loss of more than one power generation bus is indicative of loss of the FW pumps and flow. It is also indicative of loss of condenser vacuum from the loss of the circulating water pumps.

This is an anticipatory scram on loss of the power generation buses to mitigate the RPV water level drop to Level 1 following the loss of FW pump function. This scram terminates additional steam production within the RPV before Level 3 is reached.

Manual Scram: Two manual scram switches and the Reactor Mode Switch provide diverse means to initiate manually a reactor scram independent of conditions within the sensor channels, divisions

of trip logic, and trip actuators. When the Reactor Mode Switch is placed in the shutdown position, power to the circuits affected by each manual scram pushbutton is interrupted resulting in a full scram. Each of the manual scram switches is associated with one of the two divisions of actuator load power. Both manual scram switches have to be actuated simultaneously to result in a full manual scram. Because the non-software-based manual scram capability of the RPS system operates directly on the scram solenoid power, only Divisions 1 and 2 are involved. If either of those two divisions is out of service (including maintenance), a half-scram results; depressing the other division manual scram pushbutton then results in a full scram. If either of the two divisions is out of service for non-power issues the manual scram capability remains unaffected. The operability of Divisions 3 and 4 has no effect on the RPS manual scram capability.

Manual scram switches also are provided in the Remote Shutdown System (RSS) panels to achieve hot shutdown for the reactor from outside the MCR. There is a separate manual switch in each of the four divisions providing a means to manually trip all actuators in that division. An alternative manual scram can be accomplished by activating any two (or more) of the four manual divisional trip switches.

Reset Logic: A reset switch is provided to reset the manual scram in both (1 and 2) divisions of manual scram controls. A separate manual switch associated with each division of trip actuators provides the means to reset the seal-in at the input of all trip actuators in the same division. The reset does not have any effect if the conditions that caused the division trip have not cleared when a reset is attempted. All manual resets are automatically inhibited for 10 seconds to allow sufficient time for scram completion. The switch used to reset the manual scram circuitry permits resetting of the several scram groups in sequence, so re-energization of only one-half of the scram solenoids is performed at one time.

After a full scram the scram accumulator charging water header pressure drops below the trip setpoint, resulting in a trip initiating input to all four divisions of trip logic. While this condition exists, the four divisions of trip logic cannot be reset until the scram accumulator charging water header pressure trip is manually bypassed in all four divisions, and all other trip-initiating conditions have been cleared.

Containment Monitoring System

Drywell Pressure: Containment (drywell) pressure is measured at four physically separate locations by pressure sensors located on separate divisional local racks in the safety envelope within the RB. Each sensor is on a separate instrument line and is associated with a separate RPS electrical division. Each sensor provides an analog output signal to the RMU, which digitizes and conditions the signal before sending it to the appropriate DTM in the four RPS divisional trip channels. The four pressure sensors and associated instrument lines are components of the CMS.

Suppression Pool Temperature: Four channels of safety-related divisional suppression pool temperature signals, each formed by the average value of a group of 16 thermocouples installed

uniformly (both vertically and azimuthally) inside the suppression pool, provide the suppression pool temperature data for automatic scram initiation. For the suppression pool temperature high signal to be considered valid, 12 of the 16 assigned thermocouples are required to be operable. When the established limits of high temperature are exceeded in two of the four divisions, scram initiation is generated.

Each temperature sensor provides an analog output signal to the RMU, which digitizes and conditions the signal before sending it to the appropriate DTM. The temperature sensors and associated instrument lines are components of the CMS. The suppression pool water level signals also are provided. When water level drops below any of the temperature sensors, the exposed sensors are logically bypassed, so only the sensors below water level are used to determine the averaged temperature signal to the RPS.

7.2.1.2.4.3 Reactor Protection System Outputs to Interfacing Systems

Scram Signals to the CRD System: Reactor trip conditions existing in any two or more of the four RPS automatic trip channels or in both RPS manual trip channels cause power to the output circuits of the RPS (normally supplying power to the solenoids of the scram pilot valves of the CRD system) to be disconnected, resulting in insertion of all control rods and reactor shutdown.

When the scram pilot valve solenoids are disconnected from power by the RPS trip signals, the two backup scram valves of the CRD system are actuated by the RPS trip signals to exhaust the air from the scram air header, resulting in backup scram action.

RPS Status Outputs to the NMS: Two types of RPS status condition signals (four combined signals each, one per division) are provided to the NMS by the RPS. Isolated output signals, indicating that the Reactor Mode Switch is in the Run position, are provided to the four divisions of the NMS whenever the mode switch is in that position. These signals are used by the NMS to bypass the NMS SRNM alarm and trip function, whenever the Reactor Mode Switch is in the Run position.

Scram Follow Signals to the RC&IS: Upon the occurrence of any full reactor scram condition the RPS provides isolated output signals to the RC&IS. This enables automatic rod run-in (scram-follow) logic in the RC&IS to cause full insertion (or "run-in") of the fine motion control rod drives subsequent to scram. The RPS also provides the RC&IS with both scram test switch status, indicating the start of a rod pair scram test and the position of the Reactor Mode Switch.

Rod Block Signals to the RC&IS: Rod withdrawal inhibit signals (one for each channel) are provided by the RPS via isolated output signals sent to the RC&IS whenever there is a "Scram Accumulator Charging Water Header Pressure - Low" trip signal or when any scram accumulator charging water header pressure trip bypass switch is in the Bypass position.

Outputs to the LD&IS: The Reactor Mode Switch status signals from each division are provided to the LD&IS for RCPB isolation function. The RPS also provides an interlock to the LD&IS for

bypassing the MSIV isolation (when the Reactor Mode Switch is not in the Run position) that otherwise would result from high main condenser vacuum-pressure or low inlet-pressure to the turbine during startup and shutdown.

Outputs to Main Control Room Panels:

Safety-related status and alarm signals are sent from the RPS to the MCR console.

Displays: Instrument channel sensor checks are capable of being performed at the MCR console. Comparison between channels for the same process variable can be monitored and cross channel consistency can be verified. The minimum set of signals included in displays related to RPS scram variables are:

- Reactor vessel pressure
- RPV water levels
- Containment drywell pressures
- Scram accumulator charging water header pressures
- Suppression pool (local or bulk) temperatures
- Power generation bus voltages
- FW temperature
- TSV position
- Hydraulic Trip System oil pressure
- MSIV position
- Main condenser pressure
- NMS outputs

The values of all scram parameters are continuously sent through the required safety-related isolation to the N-DCIS where displays of the scram parameters from all divisions are integrated to allow comparison between divisions. Additionally, the PCF and alarm systems alarm if any divisional parameter value differs from the value in the other three divisions by more than a predetermined amount. The intent is that channel sensor checks be performed continuously.

Alarms: Alarms are provided at the MCR console by the trip condition of any of the four sensor trip channels, by the trip condition of each automatic or manual trip system, and when bypassing a scram function. The alarm function is provided through the required safety-related isolation to the PCF.

The provided alarms / indications related to RPS status are:

- RPS NMS trip (generated in NMS).
- Reactor vessel pressure high.

- RPV water level low (≤ Level 3).
- RPV water level high (≥ Level 8).
- Containment (drywell) pressure high.
- MSIV closure trip.
- TSV closure.
- TCV fast closure.
- Main condenser pressure high.
- Power generation bus loss (loss of all FW flow).
- FW temperature biased Simulated Thermal Power Trip (STPT).
- Scram accumulator charging water header pressure - low.
- Suppression pool temperature high.
- RPS divisional automatic trip (auto-scram) (each of the four: Div. 1, 2, 3, 4 automatic trip).
- RPS divisional manual trip (each of the four: Div. 1, 2, 3, 4 manual trip).
- Manual scram trip (two: both Manual A and Manual B).
- Reactor Mode Switch in Shutdown position.
- Shutdown mode trip bypassed.
- Non-coincident NMS trip mode in effect (in NMS).
- NMS trip mode selection switch still in non-coincident position, with Reactor Mode Switch in Run position (in NMS).
- Division in which channel A (B, C, or D) sensors are bypassed (four).
- Trip conditions in Channel A (B, C, or D) and Channel A (B, C, or D) sensors bypassed (four).
- Division 1 (2, 3, or 4) TLU out-of-service bypass (four).
- Scram accumulator charging water header pressure - low-low trip bypass.
- Any scram accumulator charging water header pressure trip with bypass switch still in bypass position and the Reactor Mode Switch in Startup or Run mode.
- Auto-scram test switch in test mode (manual trip of automatic logic) (four).
- TSV closure trip bypassed.
- TCV fast closure trip bypassed.
- MSIV closure trip bypassed.
- NMS SRNM trip bypassed with the Reactor Mode Switch in Run position.
- Non-coincident NMS trip bypassed with the Reactor Mode Switch in Run position.
- RPV water level high trip bypassed.

- Condenser pressure high trip bypassed.
- FW temperature biased STPT bypassed.
- Special MSIV operation bypassed.
- Power generation bus loss trip bypassed.

The above RPS displays and alarms meet the information display requirements of IEEE Std. 603, Section 5.8.

Outputs to Nonsafety-Related DCIS (Plant Computer Functions): The PCF maintains logs of the tripped, bypassed, and reset conditions of the RPS instrument channels, divisions of logic, divisions of trip actuators, and scram logic circuitry as well as tripped and reset conditions of RPS automatic and manual trip systems from the RPS through the required safety-related isolation to the N-DCIS. For conditions causing reactor trip the N-DCIS identifies the specific trip variable, the affected divisional channel identity, and the specific automatic or manual trip system. These signals also are provided to the sequence of events function of the PCF.

Outputs to the Isolation Condenser System: Reactor Mode Switch status (that is, Run/Not Run indications) from the four divisions is provided by the RPS to the ICS to be used as automatic operation signal permissives or inhibits. Automatic operation signal permissives are generated whenever the Reactor Mode Switch is placed in the Run position, and automatic operation signal inhibits are generated whenever the Reactor Mode Switch is placed in any of its remaining three positions.

Outputs to the Plant Automation System: The RPS provides the PAS with separate signals to indicate the position of the Reactor Mode Switch. The RPS also provides the auto scram signal from the OLU to the PAS.

Uninterruptible AC Power Supply: The AC electric power required by the four divisions of RPS logic is delivered from four pairs of physically separate and electrically independent uninterruptible safety-related 120 VAC buses. The power circuits of the "A" and "B" solenoids of the scram pilot valves are powered from two of the four divisional pairs of 120 VAC UPS.

7.2.1.2.4.4 System Logic Architecture and Redundancy

The basic system architecture of the RPS ensures reliable processing of sensed plant variables by employing four independent trip logic systems in four separate divisions of safety-related protection equipment. Figure 7.2-1 illustrates the basic RPS functional arrangement.

Each divisional trip system processes the trip decisions of plant sensor inputs from the four divisions using two-out-of-four coincidence to confirm the final trip state for each variable in each division. Automatic reactor trip outputs from each system to the final actuators are also confirmed by two-out-of-four coincidence of division trip outputs. A separate and diverse manual trip method is provided in the form of two independent manual trip channels. Actuation of both manual trip

systems is required for a full reactor scram. Availability is enhanced because any one division can be bypassed at one time to allow on-line repair without degrading operability. This satisfies the repair requirement of IEEE Std. 603, Section 5.10 while maintaining plant availability.

The RPS consists of four redundant divisions identical in design and independent in operation. Although each division constitutes a separate trip system, normally each division can make two-out-of-four trip decisions with or without a division of sensors being bypassed. There are four instrument channels provided for each process variable being monitored, one for each RPS division. Four sensors, one per division, are provided for each variable. When more than four sensors are required to monitor a variable the outputs of the sensors are combined into only four instrument channels. The logic in each division does not depend on absolute time of day and is asynchronous with respect to the other divisions. No division depends on the correct operation of another division. There is no combination of MCR-initiated bypasses that can unacceptably degrade the RPS.

Figures 7.2-1, 7.2-11a, and 7.2-11b provide a more detailed view of the RPS configuration and communication paths.

The RPS is implemented with two communication methodologies: "point-to-point" optical fiber inter-divisional communication and a shared memory data communication ring network. Point-to-point communication is limited to trip and bypass information and any necessary message authentication. Point-to-point fiber is also used for TLU to OLU, RPS to NMS and RPS to SSLC/ESF communication. Since the RPS is "fail safe" the loss of any communication or fiber will be interpreted as a trip. The other communication methodology uses a shared memory data communication ring network that extends between the various RPS system chassis. The data communication processors of each chassis ("nodes") connected to the data communication ring can read the entire shared memory on the communications (CIM) card and write only to a designated portion of the CIM card. The data on the data communication ring are actively transported between one chassis transmitter and another's receiver until all nodes have been updated. To increase reliability, another data communication ring (forming a counter-rotating data communication ring) is provided with the data going in the opposite direction. This scheme allows both data communication rings to be broken between two nodes and all data still get to all nodes; no single failure will prevent data transmission.

There are two "counter rotating" data communication rings within each division of RTIF. The upper data communication ring on Figure 7.2-11a interconnects the RMU, DTM, TLU and RTIF-NMS Q-CIM which are the only chassis needed to support the RTIF safety functions. This is the (redundant) path by which the RMUs transfer data to the DTMs and, in turn to the TLUs as described above. Note that the BPU is not on the shared memory data communication ring because the BPU is implemented in hardware logic.

There is a second redundant data communication ring that interconnects the above chassis and additionally nonsafety-related "operator" and "maintenance" VDUs in the RTIF and RMU cabinets and on the safety surveillance panel in the MCR (the safety-related function of this VDU is Seismic Category II). Additionally on this data communication ring are two nonsafety-related N-CIMs (RTIF N-CIM A and RTIF N-CIM B), each of which has access to the equivalent data communication rings of the other three divisions, and therefore all RTIF divisional data.

The VDUs may be used at any time to monitor RTIF signals and internal diagnostics; however, they cannot input to any of the RTIF chassis for calibration or maintenance purposes unless the chassis or RTIF division has been made inoperable by a keylock switch. Inoperable corresponds to a trip unless the division has been bypassed. The inoperable status is indicated.

7.2.1.3 Safety Evaluation

Table 7.1-1 identifies the RPS and the associated codes and standards applied, in accordance with the Standard Review Plan (NUREG-0800). This subsection addresses I&C systems conformance to regulatory requirements, guidelines, and industry standards.

7.2.1.3.1 Code of Federal Regulations

10 CFR 50.34(f)(2)(iii)[I.D.1], Human factors engineering principles applied to control room design:

- Conformance: The RPS design conforms to these requirements.

10 CFR 50.34(f)(2)(v) [I.D.3], Bypass and operable automatic status indication of safety systems:

- Conformance: The RPS design conforms to these requirements.

10 CFR 50.34(f)(2)(xxi)[II.K.1.22], Auxiliary heat removal systems functional requirements under conditions when main feedwater system is not operable:

- Conformance: The RPS conforms to these requirements.

10 CFR 50.34(f)(2)(xxiii)[II.K.2.10], Anticipatory reactor protection system trip requirements under conditions of loss of main feedwater and on turbine trip:

- Conformance: The RPS conforms to these requirements. The reactor will trip in response to a Loss of All Feedwater Flow Event. This is an anticipatory trip actuated on a power generation bus loss event. The reactor will also trip on a turbine trip only if an insufficient number of bypass valves opens within a prescribed time period.

10 CFR 50.43(e), Innovative means of accomplishing safety functions:

- Conformance: When innovative means are used in the I&C design it complies with 10 CFR 50.43(e).

10 CFR 50.49, Environmental qualification of electric equipment important to safety for nuclear power plants:

- Conformance: The RPS conforms to these requirements. See Table 3.11-1 (Electrical and Mechanical Equipment for Environmental Qualification).

10 CFR 50.55a(a)(1), Quality standards for systems important to safety:

- Conformance: The RPS conforms to these standards.

10 CFR 50.55a(h), Protection and safety systems compliance with IEEE Std. 603:

- Conformance: The RPS conforms to IEEE Std. 603. Conformance information is found in Subsections 7.1.6.6.1.1 through 7.1.6.6.1.27. Additional information concerning how the RPS conforms to IEEE Std. 603 is discussed below.
    - IEEE Std. 603, Section 4.2 (Safety-related Functions): See Subsection 7.2.1.1.
    - IEEE Std. 603, Section 4.3 (Permissive Conditions for Operating Bypasses): Permissive conditions for operating bypasses are discussed in Subsections 7.2.1.1, 7.2.1.2.4, and 7.2.1.5.2.1.
    - IEEE Std. 603, Section 4.6 (Spatially Dependent Variables): Spatial dependency of monitored variables is not applicable to the RPS.
    - IEEE Std. 603, Section 5.2 (Completion of Protective Actions): See Subsections 7.2.1.1 and 7.2.1.3.4.
    - IEEE Std. 603, Section 5.7 (Capability for Test and Calibration): Subsections 7.2.1.4.1 and 7.2.1.4.2 describe testing of the RPS. Additional information can be found in Subsections 7.2.1.3.4, 7.2.1.5.2.2, and 7.2.1.5.11.
    - IEEE Std. 603, Sections 6.2 and 7.2 (Manual Control): See Subsections 7.2.1.1 and 7.2.1.3.4 for discussion of RPS manual control.
    - IEEE Std. 603, Section 6.4 (Derivation of System Inputs): The two RPS sensing inputs that are not direct measures of the variables are the RPV water level and the loss of feedwater flow in the RPS scram logics. The RPV water level is measured by the differential pressure derived from the sensing line with a reference point. This method is a proven technology in boiling water reactor (BWR) applications. The loss of the feedwater flow variable is represented by the loss of the power generation bus signal. When the power to the feedwater pump motor is lost, the feedwater flow is also immediately lost. The use of loss of power generation bus signals to represent the loss of feedwater flow signal meets the requirements of the safety-related analysis of Chapter 15, because it is the only credible way that all feedwater flow can be lost.
    - IEEE Std. 603, Section 6.5 (Capability of Test and Calibration): Subsections 7.1.2.1.4.1 and 7.2.1.4.2 describe testing of the RPS. Additional information can be found in Subsections 7.2.1.3.4, 7.2.1.5.2.2, and 7.2.1.5.11.

- IEEE Std. 603, Sections 6.6 and 7.4 (Operating Bypasses): Operating bypasses for the RPS are described in Subsections 7.2.1.2.4.1 and 7.2.1.5.2.1.
- IEEE Std. 603, Sections 6.7 and 7.5 (Maintenance Bypasses): Maintenance bypasses for the RPS are described in Subsections 7.2.1.2.4 and 7.2.1.5.2.2.
- IEEE Std. 603, Section 8.2 (Non-Electrical Power Sources): Non-Electrical power sources for the RPS are not applicable beyond that discussed in Subsection 7.1.6.6.1.26.
- IEEE Std. 603, Section 8.3 (Maintenance Bypasses): Maintenance bypasses for the RPS are not applicable beyond that discussed in Subsection 7.1.6.6.1.27.

10 CFR 50.63, Loss of all alternating current power:

- Conformance: The RPS conforms to these requirements.

10 CFR 52.47, Contents of applications; technical information, level of design information:

- Conformance: The level of detail provided for the RPS within the DCD conforms to this requirement.

10 CFR 52.47(a)(21), Resolution of unresolved and generic (medium- and high-priority) safety issues identified in NUREG-0933:

- Conformance: Resolution of unresolved and generic safety issues is discussed in Section 1.11.

10 CFR 52.47(a)(25), Interface requirements for portions of the plant not within scope of certified design application:

- Conformance: There are no interface requirements for this section.

10 CFR 52.47(b)(1), ITAAC in design certification application:

- Conformance: ITAAC are provided for Instrumentation and Control (I&C) systems and equipment in Tier 1.

10 CFR 52.47(c)(2), Innovative means to accomplish safety function design completeness requirements per 10 CFR 50.43(e):

- Conformance: The I&C design may use innovative means for accomplishing safety functions.

7.2.1.3.2 General Design Criteria

GDC 1, 2, 4, 10, 12, 13, 19, 20, 21, 22, 23, 24, 25, 26, 27 and 29:

- Conformance: The RPS design conforms to these GDC.

7.2.1.3.3 Staff Requirements Memoranda

SRM on Item II.Q of SECY-93-087:

- Conformance: The Reactor Trip (Protection) System design conforms to Item II.Q of SECY-93-087 (NRC Branch Technical Position [BTP HICB-19]) by the implementation of an additional Diverse Instrumentation and Control System described in Section 7.8.

7.2.1.3.4 Regulatory Guides

RG 1.22, Periodic Testing of Protection System Actuation Functions - This includes conformance to BTP HICB-8:

- Conformance: The system is capable of being tested, from sensor device to final actuator device, during plant operation. The tests must be performed in overlapping stages so an actual reactor scram would not occur as a result of the testing.

RG 1.47, Bypassed and Inoperable Status Indication for Nuclear Power Plant Safety Systems:

- Conformance: Automatic indication that a system is out of service is provided in the MCR. Indicators show which part of a system is not operable and which division is bypassed. Annunciator test switches are provided in the MCR.

  Individual indicators are arranged together in the MCR to indicate which function of the system is out of service, bypassed, or otherwise inoperable. These automatic indicators remain available, and cannot be cleared until the function is operable.

  A manual switch or pushbutton is provided for manual bypass actuation, which annunciates out-of-service conditions.

  These display provisions serve to supplement administrative controls and aid the operator in assessing the availability of component and system-level protective actions. These displays do not perform a safety-related function.

  System out-of-service alarm circuits are electrically isolated from the plant safety-related systems to prevent adverse effects.

  Equipment associated with the display is tested.

RG 1.53, Application of the Single Failure Criterion to Safety Systems:

- Conformance: The RPS is organized into four physically and electrically-isolated divisions that use the principles of independence and redundancy for the single failure criterion as defined by IEEE Std. 379, Section 4, and IEEE Std. 603, Section 5.1; additionally, the design meets N-2 conditions. Analyses complying with IEEE Std. 379 will be used to confirm the safety-related system design conformance to the single failure criterion.

RG 1.62, Manual Initiation of Protective Actions:

- Conformance: Means are provided for manual initiation of reactor scram through the use of two control switches and the Reactor Mode Switch. Reactor scram is accomplished by operation of both pushbutton switches, or by placing the Reactor Mode Switch in the Shutdown position. These controls are located on the MCR console.

  The common equipment required for initiation of both manual scram and automatic scram is limited to actuator load power sources, actuator loads, and cabling between the two. There is no shared trip or scram logic equipment for manual scram and automatic scram. No single failure in the manual, automatic, or common portions of the protection system would prevent initiation of reactor scram by manual or automatic means.

  Manual initiation of reactor scram always goes to completion as required by IEEE Std. 603, Section 5.2.

RG 1.75, Criteria for Independence of Electrical Safety Systems:

- Conformance: The RPS design complies with the criteria set forth in IEEE Std. 603, Section 5.6, and RG 1.75. Safety-related circuits and safety-related associated circuits are identified and separated from redundant and nonsafety-related circuits. Isolation devices are provided where an interface exists between redundant safety-related divisions and between safety-related or safety-related associated circuits and nonsafety-related circuits. See Subsection 8.3.1.4.1 for RPS separation requirements.

RG 1.89, Environmental Qualification of Certain Electric Equipment Important to Safety for Nuclear Power Plants:

- Conformance: The RPS design conforms to RG 1.89. See Table 3.11-1 (Electrical and Mechanical Equipment for Environmental Qualification).

RG 1.97, Criteria for Accident Monitoring Instrumentation for Nuclear Power Plants:

- Conformance: The ESBWR I&C conforms to RG 1.97. Specific instruments credited for RG 1.97 compliance are determined as part of the HFE development process as discussed in Section 7.5.

RG 1.100, Seismic Qualification of Electric and Mechanical Equipment for Nuclear Power Plants:

- Conformance: The RPS design conforms to RG 1.100. See Sections 3.9 (Mechanical Systems and Components) and 3.10 (Seismic and Dynamic Qualification of Mechanical and Electrical Equipment).

RG 1.105, Setpoints for Safety-Related Instrumentation:

- Conformance: The RPS initiation setpoints are consistent with this guide. Reference 7.2-1 provides a detailed description of the GEH setpoint methodology.

RG 1.118, Periodic Testing of Electric Power and Protection Systems:

- Conformance: Periodic testing of the protection systems is performed in accordance with IEEE Std. 338, as modified by RG 1.118. The RPS is designed so its individual elements can periodically and independently be tested to demonstrate system reliability is being maintained. Safety-related RPS equipment allows for inspection and testing during periodic shutdowns and refueling.

RG 1.151, Instrument Sensing Lines:

- Conformance: NBS provides the measurement inputs to RPS. The NBS instrument sensing lines conform to the guidelines of RG 1.151 and ISA-67.02.01. Flow restrictors are provided inside containment on instrument lines connected to the RCPB. Manual isolation valves and self-actuating excess flow check valves are provided outside the drywell. The mechanical design guidelines as defined by ISA-67.02.01 and RG 1.151 are met as applicable for each installation.

RG 1.152, Criteria for Use of Computers in Safety Systems of Nuclear Power Plants:

- Conformance: The RPS design complies with RG 1.152. The hardware and software for the RPS function and other safety-related systems are developed in compliance with RG 1.152, which endorses IEEE Std. 7-4.3.2. The structured development plan for the RPS includes conformance to all software standards referenced in IEEE Std. 7-4.3.2. Hardware and software are integrated into a final assembly validated by testing against input requirements.

RG 1.153, Criteria for Safety Systems:

- Conformance: The RPS is designed to satisfy the requirements of IEEE Std. 603, as endorsed by RG 1.153.

RG 1.168, Verification, Validation, Reviews, and Audits for Digital Computer Software Used in Safety Systems of Nuclear Power Plants:

- Conformance: The RPS design conforms to RG 1.168 as implemented on the RTIF platform.

RG 1.169, Configuration Management Plans for Digital Computer Software Used in Safety Systems of Nuclear Power Plants:

- Conformance: The RPS design conforms to RG 1.169 as implemented on the RTIF platform.

RG 1.170, Software Test Documentation for Digital Computer Software Used in Safety Systems of Nuclear Power Plants:

- Conformance: The RPS design conforms to RG 1.170 as implemented on the RTIF platform.

RG 1.171, Software Unit Testing for Digital Computer Software Used in Safety Systems of Nuclear Power Plants:

- Conformance: The RPS design conforms to RG 1.171 as implemented on the RTIF platform.

RG 1.172, Software Requirements Specifications for Digital Computer Software Used in Safety Systems of Nuclear Power Plants:

- Conformance: The RPS design conforms to RG 1.172 as implemented on the RTIF platform.

RG 1.173, Developing Software Life Cycle Processes for Digital Computer Software Used in Safety Systems of Nuclear Power Plants:

- Conformance: The RPS design conforms to RG 1.173 as implemented on the RTIF platform.

RG 1.180, Guidelines for Evaluating Electromagnetic and Radio-Frequency Interference in Safety-Related Instrumentation and Control Systems:

- Conformance: The RPS design conforms to RG 1.180. See Table 3.11-1 (Electrical and Mechanical Equipment for Environmental Qualification).

RG 1.204, Guidelines for Lightning Protection of Nuclear Power Plants:

- Conformance: The RPS design conforms to RG 1.204.

RG 1.209, Guidelines for Environmental Qualification of Safety-Related Computer-Based Instrumentation and Control Systems in Nuclear Power Plants:

- Conformance: The RPS design conforms to RG 1.209. See Table 3.11-1 (Electrical and Mechanical Equipment for Environmental Qualification).

7.2.1.3.5 **Branch Technical Positions**

BTP HICB-8, Guidance for Application of Regulatory Guide 1.22:

- Conformance: The RPS design conforms to BTP HICB-8.

BTP HICB-9, Guidance on Requirements for Reactor Protection System Anticipatory Trips:

- Conformance: Hardware used to provide trip signals in the RPS is designed in accordance with IEEE Std. 603, Section 5.4 and is considered safety-related and meets the design requirements of BTP HICB-9.

BTP HICB-10, Guidance on Application of Regulatory Guide 1.97:

- Conformance: The ESBWR I&C conforms to RG 1.97. Specific instruments credited for RG 1.97 compliance are determined as part of the HFE development process as discussed in Section 7.5.

BTP HICB-11, Guidance on Application and Qualification of Isolation Devices:

- Conformance: The RPS design conforms to this position. The RPS logics use safety-related fiber-optic CIMs and fiber-optic cables for interconnections between safety-related divisions for data exchange and for interconnections between safety-related and nonsafety-related devices.

Certain diverse and hardwired portions of RPS may use coil-to-contact isolation of relays or contactors. This is acceptable according to BTP HICB-11 when the application is analyzed or tested per the guidelines of RG 1.75 and RG 1.153.

BTP HICB-12, Guidance on Establishing and Maintaining Instrument Setpoints:

- Conformance: The RPS design conforms to BTP HICB-12. The nominal setpoints are calculated based on the GEH instrument setpoint methodology (Reference 7.2-1). The setpoints are established based on instrument accuracy, calibration capability, and estimated design drift allowance data, and are within the instrument best accuracy range.

  The digital RPS trip setpoints do not drift and any changes are reported to the N-DCIS as alarms. The analog-to-digital converters are self-calibrating, and the RPS uses self-diagnostics, all of which are reported to the N-DCIS through the required safety-related isolation. It is expected that all of the variability in the parameter channel will be attributable to the field sensor. The established setpoints provide margin to fulfill both safety requirements and plant availability objectives.

BTP HICB-14, Guidance on Software Reviews for Digital Computer-Based Instrumentation and Control Systems:

- Conformance: Development of software for the safety-related system functions within RPS conforms to the guidance of BTP HICB-14. Discussion of software development is included in the LTRs *"ESBWR - Software Management Program Manual," (Reference 7.2-3) and "ESBWR - Software Quality Assurance Program Manual" (Reference 7.2-4). Safety-related software (to be embedded in the memory of the RPS logics) is developed according to a structured plan as described in References 7.2-3 and 7.2-4. These plans follow the software life cycle process described in BTP HICB-14.*

BTP HICB-16, Guidance on the Level of Detail Required for Design Certification Applications Under 10 CFR Part 52:

- Conformance: The level of detail in the RPS section content conforms to BTP HICB-16.

BTP HICB-17, Guidance on Self-Test and Surveillance Test Provisions:

- Conformance: The RPS logics conform to BTP HICB-17. Discussions on self-test and surveillance tests of RPS are provided in Subsection 7.2.1.4.

BTP HICB-18, Guidance on the Use of Programmable Logic Controllers in Digital Computer-Based Instrumentation and Control Systems:

- Conformance: Q-DCIS hardware, embedded and operating system software, and peripheral components conform to the guidance of BTP HICB-18. The Q-DCIS is built and qualified specifically for ESBWR applications as safety-related and not as commercial grade

programmable logic controllers (PLCs). The embedded and operating system software meet the acceptance criteria contained in BTP HICB-14, for safety-related applications.

BTP HICB-19, Guidance for Evaluation of Defense-in-Depth and Diversity in Digital Computer-Based Instrumentation and Control Systems (Item II.Q of SECY-93-087):

- Conformance: The Reactor Trip (Protection) System designs conform to BTP HICB-19 by implementation of an additional diverse instrumentation and control (I&C) system described in Section 7.8 as the DPS.

BTP HICB-21, Guidance on Digital Computer Real-Time Performance:

- Conformance: The real-time performance of RPS in meeting the requirements for safety-related system trip and initiation response conforms to BTP HICB-21. The real-time performance of the safety-related control system is deterministic based on the Q-DCIS internal and external communication system design and the RPS logic design. Timing signals are neither exchanged between divisions of independent equipment nor between logics within a division.

7.2.1.3.6 Three Mile Island Action Plan Requirements

In accordance with the SRP for Chapter 7 and with Table 7.1-1, 10 CFR 50.34(f)(2)(v)[I.D.3] and 10 CFR 50.34(f)(2)(xxiii)[II.K.2.10] apply to the RPS and are addressed in Subsection 7.2.1.3.1. TMI action plan requirements are generically addressed in Table 1A-1 of Appendix 1A.

7.2.1.4 Testing and Inspection Requirements

7.2.1.4.1 System Testing: Operational Verifiability

The RPS is designed so its individual operating elements are tested periodically and independently to demonstrate that RPS reliability is maintained.

The RPS design and the design of other systems providing RPS with instrument channel inputs permit verification of the operational availability of each input sensor even during reactor operation. Channel checks are continuously performed by the PCF. The instrument channels are calibrated periodically and adjusted to verify that the necessary precision and accuracy are being maintained. Such periodic checking and testing during plant operation is possible without loss of scram capability and without causing an inadvertent scram.

Safety-related sensors are designed with the capability for test and calibration during reactor operation, with the following two exceptions in the RPS:

- MSIV limit switches
- TSV limit switches

These limit switches are not accessible during reactor operation. While they are tested/checked for operability during reactor operation, they cannot be calibrated until the reactor is shutdown.

Safety-related RPS equipment is designed to allow inspection and testing during periodic shutdowns of the nuclear reactor, including refueling.

7.2.1.4.2 Surveillance Testing and In-Service Testing

The RPS equipment testing includes:

- Preoperational, startup and refueling/outage inspection testing
- In-service and operational surveillance testing

The RPS is designed to permit testing of an emergency reactor shutdown by methods simulating actual plant operation and duplicating, as closely as possible, the performance of protective actions even during reactor operation. These test methods support in-service verification of scram capability with high reliability. The RPS components and testing strategies are designed so that identifiable failures are detectable. Test methods are designed to facilitate recognition and location of malfunctioning components to allow for replacement, adjustment, or repair.

In-service testing of the RPS is performed periodically to verify operability during normal plant operation and to ensure that each tested channel can perform its intended design function. The surveillance tests include: (a) instrument channel checks, (b) functional tests, (c) verification of proper sensor and channel calibration, (d) verification of applicable functions in the division of trip logic and division of actuators, and (e) response time tests.

7.2.1.5 Instrumentation and Control Requirements

7.2.1.5.1 Automatic Scram Variables

Refer to Subsection 7.2.1.2.4.2 for discussions of the automatic scram initiating circuits and the systems that apply to them.

7.2.1.5.2 Automatic and Manual Bypass of Selected Scram Functions

7.2.1.5.2.1 Operational Bypasses

Manual or automatic bypass (take out of service) of certain scram functions permits the selection of suitable plant protection conditions during different modes of reactor operation. These RPS operational bypasses inhibit actuation of those scram functions not required for a specific state of reactor operation.

The conditions of plant operation requiring automatic or manual bypass of certain reactor trip functions are described below.

- Main steam TSV closure and steam governing TCV fast closure trip bypasses: These permit continued reactor operation at low power levels when the TSVs or TCVs are closed. The main steam TSV closure and the steam governing TCV fast closure scram trip functions are automatically bypassed when the APRM simulated thermal power of the NMS is below 40% of the rated thermal power output.

The TSV closure and TCV fast closure trips are automatically bypassed if a sufficient number of the bypass valves are opened. This bypass occurs if a sufficient number of TBVs open to at least 10% within a preset time limit following the TCV fast closure or TSV closure signal to inhibit reactor trip. The NMS system provides the RPS with an analog simulated thermal power signal used to determine both the low power bypass and the required number of TBVs needed to open for a post turbine trip or for full load rejection conditions. The low power bypass is automatically removed and both scram trip functions are enabled at reactor power levels above the bypass setpoint. The bypass permits the RPS to remain in its normal energized state under the specified conditions. This bypass condition is indicated in the MCR.

- Scram accumulator charging water header pressure - low-low bypass: This bypass is allowed only when the Reactor Mode Switch is in either the Shutdown or Refuel position. If a bypass of a scram trip is required for scram accumulator charging water header pressure - low-low after a scram has occurred (indicated operational bypass), four administratively controlled trip bypass switches in the MCR permit scram reset.

  When the reactor is in the shutdown or refuel mode the scram accumulator charging water header pressure — low-low trip can be bypassed manually in each division of trip logic by separate, manual scram accumulator charging water header pressure trip bypass switches. Control of this bypass is achieved through administrative means using manual bypass switches. This bypass allows RPS reset after a scram, while scram accumulator charging water header pressure is below the trip setpoint. The scram accumulator charging water header pressure — low-low condition would persist until the scram valves are re-closed. Each division of trip logic sends a separate rod withdrawal block signal to the RC&IS when this bypass exists in the division. This operational bypass condition is indicated in the MCR.

  The bypass is automatically removed whenever the Reactor Mode Switch is put in either the Startup or Run mode, regardless of whether the scram accumulator charging water header pressure trip bypass switches are in their bypass positions. However, a separate alarm would result in the MCR if any of the switches were left in the bypass position when the Reactor Mode Switch is in either the Startup or Run mode.

- MSIV closure for MSIV bypass (indicated operational bypass): The scram trip for MSIV closure is automatically bypassed in each division whenever the Reactor Mode Switch is in the Shutdown, Refuel, or Startup position - with reactor pressure in the associated sensor channel less than a predetermined setpoint. This bypass condition is indicated in the MCR and permits plant operation when the MSIVs are closed during low power operation. The bypass is automatically removed if the Reactor Mode Switch is moved to the Run position. This bypass permits the RPS to be placed in its normal energized state for operation at low power levels with the MSIVs either closed or not fully open.

- Special MSIV operational bypass (indicated operational bypass): Four manually-operated bypass switches are made available in the MCR to permit the bypass of trip signals from closed MSIVs on any one of the four main steam lines. This bypass permits continued reactor operation at reduced reactor power and steam flow when one steam line must be isolated for a prolonged period of time. This operational bypass is indicated in the MCR.
- Power generation bus loss trip bypass (indicated operational bypass): The Power Generation Bus Loss (Loss of All Feedwater Flow Event) scram trip function is automatically bypassed whenever the Reactor Mode Switch is in the Shutdown, Refuel, or Startup position. This bypass condition is indicated in the MCR and is automatically removed if the Reactor Mode Switch is moved to the Run position.
- Reactor Mode Switch in Shutdown position bypass (indicated operational bypass): The RPS scram trip caused by the Reactor Mode Switch being placed in the Shutdown position is automatically bypassed after a time delay of approximately 10 seconds. This operational bypass condition permits resetting of the trip actuators and re-energization of the scram pilot valve solenoids and is indicated in the MCR.
- NMS SRNM scram trip functions with Reactor Mode Switch in the Run position bypass: Whenever the Reactor Mode Switch is in the Run position, SRNM reactor scram trip functions are automatically bypassed. However, this bypass is not indicated because it is the normal condition with the Reactor Mode Switch in the Run position. This bypass condition is indicated in the MCR. The SRNM rod block functions also are disabled when the Reactor Mode Switch is in the Run position.
- Non-coincident NMS scram trips in Run mode bypass: Whenever the Reactor Mode Switch is in the Run position, it forces the NMS logic to the coincident mode (regardless of the coincident/non-coincident NMS switch position). If any of the coincident/non-coincident NMS trip switches are in the non-coincident position when the Reactor Mode Switch is in the Run position there is an alarm in the MCR. This logic is an NMS function.

  The coincident trip mode is required during reactor startup. The non-coincident NMS trip function is required during initial fuel loading and subsequent refueling operations. During such operations the Reactor Mode Switch is in the Refuel position (or for certain testing conditions, in the Shutdown or Startup positions). A non-coincident NMS trip occurs in each division of trip logic when any single SRNM trip signal is present in the NMS if the coincident/non-coincident manual switch in the division is in the non-coincident position. This logic is an NMS function.
- RPV water level high trip bypass (indicated operational bypass): The RPV water level high trip function is automatically bypassed whenever the Reactor Mode Switch is in the Shutdown, Refuel, or Startup position. This bypass condition is indicated in the MCR and is automatically removed if the Reactor Mode Switch is moved to the Run position.

- Condenser pressure high trip bypass (indicated operational bypass): The condenser pressure high trip function is automatically bypassed whenever the Reactor Mode Switch is in the Shutdown, Refuel, or Startup position. This bypass condition is indicated in the MCR and is automatically removed if the Reactor Mode Switch is moved to the Run position.
- APRM, OPRM, and SRNM scram trips bypasses: These have manual bypass capabilities within the NMS, not the RPS.

7.2.1.5.2.2 **Maintenance Bypasses**

Manual bypass capability is provided to allow certain portions of RPS-related equipment to be taken out of service for maintenance, repair, or replacement. Maintenance bypasses reduce the degree of redundancy of RPS channels but do not affect or eliminate any scram function. Protective functions are available while any RPS equipment is in maintenance bypass. Except where indicated otherwise, any maintenance bypass generates a status alarm at the MCR operator's console.

The following maintenance bypasses are provided:

- Detector inputs (division of sensors) bypass (indicated maintenance bypass): A manually operated bypass switch with interlock capability (for example, a joystick-type switch) is installed in the MCR to bypass (take out of service) the division of sensors trip of one RPS division at a time. Once a bypass of one sensor channel has been established, bypasses of any of the remaining three sensor channels are inhibited. Whenever a division of sensors bypass switch is placed in the bypass position, there is an alarm in the MCR indicating the bypassed sensor division. The effect of the division of sensors bypass is to convert the two-out-of-four trip to two-out-of-three trip logic. A division of sensors bypass in any division bypasses all trip-initiating input signals from the bypassed division at the DTM trip input to the TLU. Bypassing a division of sensors allows each of the four divisions to determine a two-out-of-three trip. Loss of communication with a bypass switch is interpreted as a "no bypass" signal.

  This bypass permits any one of the safety-related RPS components of the input sensor channels of one division to be repaired, replaced, or maintained off-line.

- TLU output (division out of service) bypass (indicated maintenance bypass): A manually-operated bypass switch with interlock capability (for example, a joystick-type switch) is installed in the MCR to bypass the RPS trip output logic of one RPS electrical division at a time. This bypass is effective at the TLU trip input to the OLU and permits the RTIF TLU of the associated division to be repaired, replaced, or maintained off-line. Loss of communication with the bypass switch is interpreted as a "no bypass" signal.

  The interlock ensures that the output signals of only one TLU (of one division) can be bypassed at any one time. Once a bypass of one division of trip logic has been established, bypasses of any of the remaining three division trip logics are inhibited. When a division out of service bypass switch is placed in the bypass position, there is an alarm in the MCR indicating which

division is out of service. With a division out of service bypass in effect, the operator still is able manually to trip that division.

- The division of sensors maintenance bypass function and the division out of service maintenance bypass function are independent. Thus, bypassing one division of sensors (taken out of service at the sensor channels level) and, simultaneously removing from service the same division or any other division at the RPS trip system level is allowed. In all cases, the RPS system remains able to trip the reactor if any two (or more) un-bypassed parameters exceed their trip values.

7.2.1.5.3 Requirements for Manual Controls

Operator action by means of manual controls is limited to:

- Initiation of scram by manual scram switches
- Reactor Mode Switch operation (results in scram if placed in the Shutdown position)
- Reset of automatic trip systems after trip input signals clear
- Reset of manual trip systems (preferably after reset of the automatic trip systems)
- Manual bypasses for conditions that are specifically permitted
- Manual initiation of selected trip systems or trip actuators using trip logic test switches

7.2.1.5.4 Reactor Mode Switch

A multi-function, multi-bank, control switch placed on the MCR console provides mode selection for the necessary interlocks associated with the various plant modes: Shutdown, Refuel, Startup, and Run (see Chapter 16, Table 1.1-1 for mode titles and descriptions). This Reactor Mode Switch provides both electrical and physical separation between the components associated with each of the four separate divisions. The mode switch positions and their related bypass and trip/reset functions are as follows.

- Shutdown Position:
  - Initiates a reactor scram
  - Enables NMS non-coincident trip function
  - Enables a manual scram accumulator charging water header pressure trip bypass
  - Enables automatic bypass of the TCV fast closure trip
  - Enables automatic bypass of the TSV closure trip
  - Enables automatic bypass of the MSIV closure trip
  - Enables automatic bypass of the power generation bus loss (Loss of All FW Flow) trip
- Refuel Position:
  - Enables NMS non-coincident trip function

  - Enables the manual scram accumulator charging water header pressure trip bypass
  - Enables automatic bypass of the TCV fast closure trip
  - Enables automatic bypass of the TSV closure trip
  - Enables automatic bypass of the MSIV closure trip
  - Enables automatic bypass of the Power Generation Bus Loss (Loss of All FW Flow) trip
- Startup Position:
  - Enables NMS non-coincident trip function
  - Disables the manual scram accumulator charging water header pressure trip bypass
  - Enables the automatic bypass of the MSIV closure trip
  - Enables automatic bypass of the TCV fast closure trip
  - Enables automatic bypass of the TSV closure trip
  - Enables automatic bypass of the power generation bus loss (Loss of All FW Flow) trip
- Run Position:
  - Disables all trip bypasses enabled by any of the other three mode switch positions
  - Bypasses NMS SRNM trips

7.2.1.5.5 **Manual Scram Switches**

Two manual scram switches permit initiation of a scram, independent of conditions within other RPS equipment (sensor channels, divisions of trip logic, or divisions of trip actuators). Each manual scram switch is associated with one of the two divisions of actuator load power. Both manual scram switches are located on the MCR console and do not require any micro-processor functionality; duplicate switches are included in the RSS panels.

7.2.1.5.6 **Manual Divisional Trip Switches**

Each of the four RPS automatic trip systems has manual trip capability provided by four divisional trip switches located in positions easily accessible for optional use by the plant operator. Each switch, when momentarily put into its trip position, trips the actuators that normally would be tripped by a scram condition for that division. Momentarily operating any two of the four manual divisional trip switches results in a full reactor scram.

7.2.1.5.7 **Trip Reset Switches**

Up to five trip-reset switches will reset any of the four automatic and two manual-scram trip systems that have been tripped and sealed-in, as follows.

- One trip reset switch resets both manual trip systems. The switch circuitry staggers the re-energization of the four groups of scram pilot valve solenoids so only two groups of "A" and "B" solenoids are re-energized simultaneously.

- Four separate switches comprise the trip-reset function for resetting the sealed-in, automatic trip logic outputs in the four divisions. Thus, physical separation of the four electrical divisions is maintained.

7.2.1.5.8 Operational Bypass Switches

Requirements for operational bypass switches for RPS safety-related functions are addressed in Subsection 7.2.1.5.2.1. Operational bypass switches are under administrative control.

7.2.1.5.9 Reactor Mode Switch In Shutdown Position Scram Bypass Switches

Two manual control switches are used to bypass the scram signal when moving the Reactor Mode Switch to its Shutdown position. This bypass only would be permitted during an outage condition when the reactor already is shutdown.

7.2.1.5.10 Maintenance Bypass Switches

Requirements for RPS-related maintenance bypass switches are addressed in Subsection 7.2.1.5.2.2. The maintenance bypasses are:

- Four division of sensor maintenance bypass switches
- Four division out of service maintenance bypass switches

7.2.1.5.11 Test Switches

Test switches to aid in surveillance testing during reactor operations are provided in the RPS design.

7.2.2 Neutron Monitoring System

The NMS monitors reactor core thermal neutron flux from the startup source range to beyond rated power and provides trip signals initiating reactor scrams under excessive neutron flux or excessive rates of change in neutron flux (short period) conditions.

7.2.2.1 System Design Bases

The subsystems comprising the NMS are:

- Startup Range Neutron Monitor (SRNM)
- Power Range Neutron Monitor (PRNM)
- Automatic Fixed In-Core Probe (AFIP)
- Multi-Channel Rod Block Monitor (MRBM)

The PRNM subsystem includes the Local Power Range Monitor (LPRM), APRM functions, and the OPRM.

The SRNM and PRNM subsystems are safety-related and are discussed below. The nonsafety-related AFIP subsystem and the MRBM are addressed in Subsection 7.7.6. The

application of this non-safety to safety interface is described in Subsection 7.1.3.3. The CIM uses a one-way fiber-optic communication data link and provides required safety-related isolation when passing data from nonsafety-related systems to safety-related systems.

7.2.2.1.1 Startup Range Neutron Monitor Subsystem

7.2.2.1.1.1 Trip Functions

The SRNM scram trip functions are discussed in Subsection 7.2.1.2.4.2, and rod block trip functions are discussed in Subsection 7.7.2.2. The SRNM channels also provide trip bypass. The trip setpoints are adjustable. The SRNM trip functions are shown in Table 7.2-2. A short period signal (the period withdrawal permissive) inhibits continuous control rod withdrawal, thereby avoiding a reactor scram (due to the short reactor period caused by excessive rod withdrawal).

- The trip signals provided in the SRNM design are shown in Table 7.2-3.
- SRNM trips are active only when the Reactor Mode Switch is not in the Run position. When the NMS coincident/non-coincident switch is in the non-coincident position any one of the SRNM can generate trips. When the Reactor Mode Switch is in the Run position, the NMS trips are automatically put into the coincident mode and, if any of the coincident/non-coincident switches are still in the non-coincident position, an alarm will be generated. For each division, the three SRNM scram trip signals are combined to form a divisional SRNM trip signal that is separately sent with the divisional APRM trip signal to the RPS.
- Trips dependent upon signal magnitude have setpoints adjustable in the instrument range.
- The SRNM internal algorithms modify the response time of the period and upscale rod blocks and scrams as a function of count rate and power with a longer response time allowed for initially lower flux.
- A short-period warning signal (Period Withdrawal Permissive) is provided to inhibit rod withdrawal to avoid an inadvertent scram due to excessive rod withdrawal.
- An SRNM interlock signal "ATWS Permissive" is established and sent to the Anticipated Transients Without Scram / Standby Liquid Control (ATWS/SLC) logic as a permissive signal to allow the initiation of liquid boron injection by the SLC system.
- The period trip is active in the coincident and non-coincident mode.
- An instrument inoperative alarm is provided to signal that an SRNM channel is out of service.
- An SRNM channel is considered inoperative if any of the following conditions occur. Its Calibrate-Operate switch is not in the Operate mode, and
    - Any interlock in the channel is open,
    - The unit self-test function detects critical failures, or
    - The detector polarizing (excitation) voltage falls below a preset level.

7.2.2.1.1.2 Safety-Related Design Bases

The general SRNM safety-related functional requirements follow.

- The SRNM is designed as a safety-related system. The SRNM generates a high neutron flux trip signal or a short-period trip signal used to initiate a reactor scram in time to prevent fuel damage resulting from AOOs or infrequent events.
- The SRNM and its preamplifier are qualified to operate under design basis accident (DBA) and abnormal environmental conditions.
- The independence and redundancy incorporated in the SRNM functional design are consistent with the safety-related design basis of the RPS.
- The system is designed to produce a safety-related permissive signal to the ATWS/SLC system logic.

The SRNM is designed as a safety-related subsystem generating trip signals to prevent fuel damage in the event of any abnormal reactivity insertion transients (while operating in the startup power range). The trip signal results either from an excessively high neutron flux level or an excessive rate of neutron flux increase (a short reactor period).

The setpoints of these trips are such that under the worst reactivity insertion transients fuel integrity is protected. Under the worst bypass condition, where one SRNM from each division is bypassed, the monitoring and protection functions still are adequately provided. The independence and redundancy requirements are incorporated into the design of the SRNM and are consistent with the safety-related design bases of the RPS.

7.2.2.1.1.3 Nonsafety-Related Design Bases

Neutron sources and neutron detectors together provide a signal count rate of at least 3 cps with the control rods fully inserted in a cold non-irradiated core.

The SRNM is designed to perform the following nonsafety-related functions:

- Indicate measurable increases in output signals, with the maximum permitted number of SRNM channels out of service during normal reactor startup operations.
- Provide continuous thermal neutron flux monitoring over a range of 10 decades (approximately 1×10^3 to 1.5×10^{13} neutrons/cm^2/sec).
- Provide continuous measurement of time rate-of-change of neutron flux (reactor period) over the range from approximately -100 seconds to (-) infinity and (+) infinity to approximately +10 seconds.
- Generate interlock signals to block control rod withdrawal if the neutron flux is greater-or-less-than a preset value, or if defined electronic failures occur.
- Generate rod block (inhibit control rod withdrawal) whenever the reactor period decreases below a preset value.

- Maintain the monitoring and alarming functions of the available monitors upon the loss of a single power bus.

7.2.2.1.2 Local Power Range Monitor

7.2.2.1.2.1 Safety-Related Design Bases

The general safety-related functional requirements are as follows.

- To provide a sufficient overall number of LPRM signals to fulfill the APRM safety-related design bases.
- To design the LPRM as a safety-related system to fulfill the APRM safety-related design bases.
- To qualify the LPRM to operate under design basis accidents and abnormal environmental conditions.

The LPRM is designed to monitor the local power level and to provide a sufficient number of LPRM signals to the APRM system to fulfill the safety-related design basis for the APRM. The LPRM itself has no safety-related design basis. However, it is qualified to safety-related standards.

7.2.2.1.2.2 Nonsafety-Related Design Bases

The LPRM performs the following nonsafety-related functions.

- Provides signals to the APRM that are proportional to the local neutron flux at various locations within the reactor core.
- Provides signals to alarm high or low local thermal neutron flux.
- Provides signals proportional to the local neutron flux to drive indicators and displays, and for the PCF to be used for operator evaluation of power distribution.
- Provides signals proportional to the local neutron flux for use by other interface systems such as the RC&IS for the rod block monitoring function.

7.2.2.1.3 Average Power Range Monitor

7.2.2.1.3.1 Safety-Related Design Bases

The general APRM safety-related functional requirements are as follows.

- To design the system to safety-related standards. The general functional requirements specify that, under the worst permitted input LPRM bypass conditions, the APRM is capable of generating a timely trip signal in response to excessive average neutron flux increases to prevent fuel damage. The independence and redundancy incorporated into the design of the APRM is consistent with the safety-related design bases of the RPS.
- To design the system to produce a safety-related simulated thermal power signal to the RPS to allow that system to support reactor power scram bypass requirements.

- To provide information for monitoring the average power level of the reactor core in the power range. The APRM is capable of generating a timely trip signal to scram the reactor in response to an excessive and unacceptable neutron flux increase to prevent fuel damage. Such a trip signal includes a trip from the simulated thermal power signal, representing the APRM flux signal through a time constant representing the actual fuel time constant. The resulting simulated thermal power signal accurately represents core thermal (as opposed to neutron flux) power and the heat flux through the fuel.
- To assure scram functions when the minimum LPRM input requirement to the APRM is fulfilled. If this requirement cannot be met an inoperative channel trip signal is generated. Independence and redundancy requirements are incorporated into the design and are consistent with the safety-related design basis of the RPS.

7.2.2.1.3.2 Nonsafety-Related Design Bases

The APRM performs the following nonsafety-related functions.

- Provides continuous indication of average reactor power (neutron flux) from 1% to 125% of rated reactor power, which overlaps with the SRNM range. Such signals are made available as core power information to other interfacing systems.
- Provides interlock signals for blocking further rod withdrawal to avoid an unnecessary scram actuation.
- Provides a simulated thermal power signal derived from each APRM channel, which approximates the heat dynamic effects of the fuel.
- Provides a continuously available LPRM/APRM display for detection of any neutron flux oscillation in the reactor core.

7.2.2.1.4 Oscillation Power Range Monitor

7.2.2.1.4.1 Safety-Related Design Bases

The general OPRM safety-related functional requirements are as follows.

- Design the OPRM to safety-related standards. The general functional requirements specify that, under the worst permitted input LPRM bypass conditions, the OPRM is capable of generating a timely trip signal in response to core neutron flux oscillation conditions and thermal-hydraulic instability to prevent violation of the thermal safety limit. The independence and redundancy incorporated into the design of the OPRM is consistent with the safety-related design bases of the RPS.
- Provide OPRM monitoring and protection function for core-regional and core-wide neutron flux oscillation monitoring using the LPRM signals sent to the associated APRM channel in which the OPRM channel resides. The OPRM is capable of generating a timely trip signal to scram the reactor in response to an excessive and unacceptable neutron flux oscillation to prevent fuel

damage. Scram functions are ensured when the minimum LPRM input requirement to the OPRM is fulfilled. Independence and redundancy requirements are incorporated into the design and are consistent with the safety-related design basis of the RPS.

7.2.2.1.4.2 Nonsafety-Related Design Bases

The OPRM provides core neutron flux oscillation information for the PCF and MCR display, and alarms when the OPRM is inoperative or has an insufficient number of LPRM inputs.

7.2.2.2 System Description

The safety-related functions of the NMS consist of the SRNM and PRNM subsystems. (The LPRM, APRM, and OPRM collectively are called the PRNM subsystem.) The nonsafety-related AFIP and MRBM subsystems of the NMS are discussed in Subsection 7.7.6.

7.2.2.2.1 System Identification

The purpose of the NMS is to monitor reactor power generation and, for the safety-related aspects of the NMS, to provide trip signals to the RPS initiating a reactor scram whenever there is an excessive neutron flux (and thermal power) level, excessive neutron flux oscillation, or excessive rate of change in neutron flux (short period). In addition, it provides power information to the PCF and the Automated Thermal Limit Monitor (ATLM) in the RC&IS, for control of the rod withdrawal block and FW temperature control valve one-way block functions. The operating range of the various detectors is shown in Figure 7.2-3. A functional block diagram (Figure 7.2-4) shows a typical SRNM division. A functional block diagram (Figure 7.2-5) shows a typical PRNM division.

7.2.2.2.2 Neutron Monitoring Subsystem Safety Classification

The SRNM, LPRM, APRM, and OPRM perform safety-related functions and are designed to meet the applicable design criteria. The system classification is shown in Section 3.2. The safety-related subsystems are qualified in accordance with Sections 3.10 and 3.11.

The AFIP Subsystem of the NMS and the MRBM are nonsafety-related and are discussed within Subsection 7.7.6.

7.2.2.2.3 Power Sources

The safety-related NMS equipment is powered by redundant 120 VAC divisional safety-related UPS. The power sources for each system are discussed in the individual subsystem descriptions.

7.2.2.2.4 Startup Range Neutron Monitor Subsystem

7.2.2.2.4.1 General Description

The SRNM monitors neutron flux from the source range (approximately 1×10^3 neutrons/cm^2/sec) to approximately 1.5×10^{13} neutrons/cm^2/sec. The SRNM subsystem has 12 SRNM channels, each having one fixed in-core regenerative fission chamber sensor.

7.2.2.2.4.2 Power Sources

SRNM channels are powered as listed below:

- A, E, J: 120 VAC Div. 1 UPS
- B, F, K: 120 VAC Div. 2 UPS
- C, G, L: 120 VAC Div. 3 UPS
- D, H, M: 120 VAC Div. 4 UPS

Each SRNM cabinet is powered by two redundant divisional 120 VAC UPS in the appropriate division; either source of power can support system operation.

7.2.2.2.4.3 Physical Arrangement

The 12 SRNM detectors are located at a fixed elevation about the mid-plane of the fuel region and are uniformly distributed throughout the core. The SRNM detector locations in the core, together with the neutron source locations, are shown in Figure 7.2-6. Each detector is contained within a pressure barrier dry tube inside the core with signal output exiting the bottom of the dry tube under-vessel. Detector cables are routed separately to the appropriate containment penetration according to divisional assignment. They are connected to their designated preamplifiers located in the respective divisional quadrants of the RB.

The SRNM preamplifier signals are transmitted to the SRNM digital processing equipment units, which provide algorithms for signal processing and calculations to provide neutron flux, power, period trip margin, and period. Additionally, they provide outputs for local and control console displays and recorders and to the PCF. The individual SRNM channel trips are combined to form a SRNM divisional trip in the NMS TLU function (as shown in Figure 7.2-4). This SRNM divisional trip is sent to the RPS through a safety-related network interface. (This is the logic in the coincident mode. Further discussion of SRNM trip logic is included in Subsection 7.2.2.5.)

Alarm and trip outputs also are provided for both high neutron flux and short period trip or alarm conditions. Such outputs include the instrument inoperative trip. The electronics for the SRNM and their designated bypass units are located in four separate cabinets, one in each of the four divisional RB quadrants, and in each of the CB divisional equipment room locations. The SRNM satisfies the IEEE Std. 603, Section 5.1 single failure criterion because the failure of any individual SRNM channel does not affect the protection function of the SRNM through channel bypasses discussed in Subsection 7.2.2.2.4.6 (with any three of the four divisions of safety-related power available). It also satisfies the IEEE Std. 603, Section 5.6 independence requirement.

7.2.2.2.4.4 Signal Processing

Over the 10-decade power monitoring range two monitoring methods are used: (1) the counting method for the lower counting range (approximately 1×10^3 neutrons/cm^2/sec) to approximately 1

$\times 10^9$ neutrons/cm^2/sec, and (2) the Campbelling technique Mean Square Voltage (MSV) for the higher range, from 1×10^8 neutrons/cm^2/sec to 1×10^{13} neutrons/cm^2/sec of neutron flux.

In the counting range, after pre-amplification, the discrete pulses produced by the sensors are applied to a discriminator. The discriminator, together with other digital noise-limiter features, separates the neutron pulses from gamma radiation and other noise pulses. The neutron pulses are counted. The reactor thermal power is proportional to the count rate.

In the MSV range, where it is difficult to distinguish among the individual pulses, a DC voltage signal proportional to the mean square value of the input signal is produced. The reactor power is proportional to this MSV. In the mid-range overlapping region, where both methods apply, the SRNM calculates a neutron flux value based on a weighted interpolation of the two flux values as calculated by each method. A continuous and smooth flux reading transfer is achieved in this manner. In addition, the calculation algorithm for the period-based trip circuitry generates a trip margin setpoint for the period trip protection function.

7.2.2.2.4.5 Trip Functions

The SRNM scram trip functions are discussed in Subsection 7.2.1.2.4.2, and rod block trip functions are discussed in Subsection 7.7.2.2. The SRNM channels also provide trip bypass. The trip setpoints are adjustable. The SRNM trip functions are shown in Table 7.2-2. A short period signal (the period withdrawal permissive) inhibits continuous control rod withdrawal to avoid a reactor scram (due to a shorter reactor period caused by excessive rod withdrawal).

7.2.2.2.4.6 Bypasses and Interlocks

The 12 SRNM channels are divided two ways; there are three SRNMs per division assigned as previously described and the 12 SRNMs are additionally divided into core quadrants with three SRNMs per quadrant such that each quadrant has three separate divisions. The quadrants/SRNMs are arranged into four bypass groups of three SRNMs each; a joystick type bypass switch ensures that no more than one SRNM in a quadrant can be simultaneously bypassed. Therefore, a maximum of four SRNM channels can be bypassed at any one time. This scheme assures that each quadrant will always have at least two unbypassed SRNMs for startup range flux monitoring. There is no additional SRNM bypass capability at the divisional level. However, it is possible to bypass all three SRNMs belonging to the same division. When this is required, a divisional bypass is generated that allows that division's NMS DTM to be bypassed. For SRNM calibration or repair, the bypass can be performed for each individual channel separately through these SRNM bypasses without putting the whole division out of service. The SRNM subsystem satisfies the repair requirement of IEEE Std. 603, Section 5.10. Note that bypassing any of the SRNM sensors within a division does not affect the ability of the NMS to perform two-out-of-four trip determinations using the trip decisions from the SRNM divisions (with any three of the four divisions of safety-related power available). The SRNM subsystem satisfies the IEEE Std. 603, Section 5.1 single failure criterion.

The SRNM bypass switches are mounted on the MCR panel. Bypass functions for the SRNM and the APRM in the NMS are separate. There is no single NMS divisional bypass affecting both the SRNM and the APRM. No APRM bypass forces a SRNM bypass. Also, all NMS bypass logic control functions are located within the NMS, not in the RPS.

The SRNM has several major interlock logics. The SRNM trip functions are in effect when the Reactor Mode Switch is not in the Run position. The SRNM upscale trip is only active in the NMS non-coincident mode (Table 7.2-2). The SRNM ATWS permissive signals are sent to the ATWS/SLC system to control initiation of SLC system boron injection and associated functions (such as FW runback).

7.2.2.2.4.7 Redundancy and Diversity

The signal outputs from the 12 SRNM channels are arranged so each of the four divisions includes a different set of designated SRNM channels covering different regions of the core. The SRNM monitoring and protection function is provided by each individual channel. Failure of an un-bypassed single SRNM channel causes an inoperative trip to only one of the four divisions, whereas a full scram requires divisional trips in two-out-of-four divisions within the NMS. Bypassing a single SRNM channel does not cause a trip output to the related SRNM division and does not prevent the remaining SRNM channels from performing their safety-related functions.

7.2.2.2.4.8 Environmental Considerations

The wiring, cables, and connectors located within the drywell are designed for continuous duty in the environmental conditions described in Appendix 3H.

The SRNM instruments are designed to operate under the expected environmental conditions. Environmental qualification is discussed in Section 3.11.

7.2.2.2.5 Local Power Range Monitor

7.2.2.2.5.1 General Description

The LPRM monitors local neutron flux in the power range. The LPRM provides input signals to the APRM (Subsection 7.2.2.2.6), the RC&IS (Subsection 7.7.2), and the PCF of the N-DCIS (Subsection 7.1.5).

7.2.2.2.5.2 Uninterruptible Power Supply

Alternating current power for the LPRM circuitry is supplied by four pairs of redundant divisional 120 VAC UPS buses corresponding to the four safety-related divisions. The cabinets can perform their functions with either of their redundant power sources. Each division supplies power to one-fourth of the detectors. Each LPRM detector is provided with a DC power supply, housed in the designated divisional APRM instrument furnishing the detector polarizing potential.

7.2.2.2.5.3 Physical Arrangement

A single division of LPRMs consists of a total of 64 detectors - one detector from each LPRM assembly (from a total of 64 assemblies in the core). There are a total of 256 LPRM detectors in the core. Each assembly consists of four LPRM fission chamber detectors uniformly spaced at four axial positions in the fuel bundle vertical direction. The 64 assemblies are distributed uniformly throughout the whole core. Within the core, for each square fuel region of four-by-four fuel bundles, LPRM assemblies are located at the four corners.

The LPRM assembly locations in the core are illustrated in Figure 7.2-7. The LPRM detector axial positions in the fuel bundle vertical direction are illustrated in Figure 7.2-8. The LPRM detector at the lowest position is designated LPRM A. Detectors above A are designated B and C, with the uppermost detector designated D.

The LPRM detector is a fission chamber with a polarizing potential of approximately 100 VDC. The four detectors comprising a detector assembly are contained in a common tube also housing the AFIP sensors (Subsection 7.7.6). The enclosing housing tube is perforated to promote reactor coolant flow for detector cooling.

In addition, the LPRM assembly contains a set of two thermocouples mounted inside its lower portion (at an elevation below the core plate). The thermocouple sensors provide core inlet temperature data to be used by the PCF of the N-DCIS for core flow determination using the heat balance method. A pair of thermocouple sensors is mounted on all 64 LPRM assemblies (at the same elevation). Figure 7.2-8 shows the relative elevations of the fixed in-core probe sensors and the thermocouples.

The LPRM cables are grouped by associated APRM trip channel under the RPV and routed to the RB in conduit to maintain separation. The LPRMs provide inputs to each of the four APRM channels. The four APRM channels are mounted in separate bays with complete physical separation. This arrangement and wiring practice provides the required electrical isolation and physical separation to fulfill the independence requirement of IEEE Std. 603, Section 5.6.

7.2.2.2.5.4 Signal Processing

At the under-vessel pedestal region the LPRM detector outputs from the assembly are connected to respective coaxial cables routed through the containment penetrations and to the signal conditioning units in the RB. In the signal conditioning units the signals are processed, amplified, converted to digital data, and transmitted by fiber-optic cable to the CB NMS cabinets located in the safety-related equipment rooms.

The amplified signal is proportional to the local neutron flux level. The LPRM signals are averaged and normalized to reactor power by the APRM logic, to produce an APRM signal (Refer to Subsection 7.2.2.2.6). Individual LPRM signals also are transmitted (with proper electrical isolation)

through dedicated interface units in the APRM from other systems such as the RC&IS and the PCF to provide local power information.

7.2.2.2.5.5 Trip Functions

The LPRM channels provide trip and status signals indicating when an LPRM is upscale, downscale, or bypassed.

7.2.2.2.5.6 Bypasses and Interlocks

Each LPRM channel is capable of being individually bypassed. When the maximum allowed number of bypassed LPRMs for each APRM has been exceeded an inoperative trip is generated by the affected APRM channel.

7.2.2.2.5.7 Redundancy

The LPRM detectors are arranged in four divisional APRM channels with 64 LPRM detector signals in each. The redundancy criteria are met, ensuring (in the event of a single failure under permissible APRM bypass conditions) the safety-related protection function is performed as required (with any three of the four divisions of safety-related power available).

7.2.2.2.5.8 Environmental Considerations

The LPRM detector and detector assembly are designed to operate up to a gauge pressure of approximately 8.62 MPa (1250 psig) and at an ambient temperature of approximately 315°C (599°F). The wiring, cables, and connectors located within the drywell are designed for continuous duty at drywell ambient conditions. The LPRMs are capable of functioning during and after DBEs. (Refer to Sections 3.10 and 3.11).

7.2.2.2.6 Average Power Range Monitor

7.2.2.2.6.1 General Description

The APRM performs a safety-related function. There are four APRM channels, one per division. Each APRM channel receives 64 LPRM signals as primary inputs (from the RB) through fiber-optic cables. Each APRM channel then averages the inputs and normalizes the result to provide an APRM value corresponding to the average core thermal power signal. One APRM channel is associated with each division of the RPS.

7.2.2.2.6.2 Power Sources

APRM channels are powered as listed below:

- A: Redundant 120 VAC Div. 1 UPS
- B: Redundant 120 VAC Div. 2 UPS
- C: Redundant 120 VAC Div. 3 UPS
- D: Redundant 120 VAC Div. 4 UPS

Either of the two redundant divisional power sources supports APRM operation. The bypass units and LPRM detectors associated with each APRM channel receive power from the same power sources as the APRM channel.

7.2.2.2.6.3 Physical Arrangement

The APRM subsystem consists of four independent and separate instrument channels. Each APRM channel receives 64 LPRM signal inputs. The assignment of individual LPRM sensors to each of the four APRM channels is performed, ensuring that an even and uniform selection of LPRM sensors from the whole core is allocated to each APRM channel. In this manner, the average value of the 64 LPRM signals from the entire core represents the average core power value. The LPRM signals within the APRM channel are averaged and normalized to form an average core power APRM signal. The LPRM assignment to APRM channels is shown in Figure 7.2-9.

7.2.2.2.6.4 Signal Conditioning

The APRM channel electronic equipment averages the output signals from 64 LPRM detectors to form an APRM signal for this channel. The averaging circuit automatically corrects for the number of un-bypassed LPRM input signals. The APRM channel electronics unit includes the capabilities for LPRM and APRM calibrations and diagnostics. The APRM has communication interface modules (CIMs) to send signals to other systems. A simplified PRNM block diagram is shown in Figure 7.2-5. Individual APRM channel trips are routed to the RPS directly. The APRM satisfies the IEEE Std. 603, Section 5.1 single failure criterion, because the failure of any individual APRM channel does not affect the protection function of the APRM through channel bypasses, as discussed in Subsection 7.2.2.2.6.6 (with any three of the four divisions of safety-related power available). It also satisfies the IEEE Std. 603, Section 5.6, independence requirement, because the redundant portions of the NMS equipment are independent of (and physically separated from) each other, and the NMS equipment is separated from other systems.

7.2.2.2.6.5 Trip Function

The APRM scram trip function is discussed in Subsection 7.2.1.2.4.2. The APRM rod block trip function is discussed in Subsection 7.7.2.2. The APRM channels also provide trip and status signals indicating when an APRM channel is upscale, downscale, bypassed, or inoperative. The trip setpoints are adjustable. APRM system trip functions are summarized in Table 7.2-4.

7.2.2.2.6.6 Bypasses and Interlocks

Bypass of one APRM channel out of four channels is allowed at any one time for repair during plant operation while maintaining the required APRM functions. This satisfies the repair requirement of IEEE Std. 603, Section 5.10. When one APRM channel is bypassed, the trip logic in the NMS becomes two-out-of-three instead of two-out-of-four (with any three of the four divisions of safety-related power available).

The bypass of APRM channels is accomplished with a joystick-type switch having mutually exclusive positions. The APRM bypass switch is located on an MCR panel. Access to the panel and the switch is under administrative control. When a bypass is active, the input from the bypassed APRM/OPRM channel (APRM or OPRM trip function) will be bypassed by removing it from the vote. The remaining signals are voted with a two-out-of-three logic, thus retaining the ability to withstand a single-channel failure.

The final check of the signals, performed independently by each voter channel, ensures that no single failure causes an inadvertent bypass. The bypass function uses physical means and independent logic to ensure that no more than one channel is bypassed at a given time.

There are no automatic bypasses for the APRM trip function. The APRM trip setpoint is automatically changed to a lower value (setdown) when the manually operated Reactor Mode Switch is not in the Run position. When any APRM (or OPRM) channel output is bypassed, the bypass is indicated on the plant operator's panel. The same channel bypass bypasses both the OPRM and APRM channels.

The APRM ATWS permissive signals are sent to the ATWS/SLC system as permissive signals for the ADS initiation inhibit function. The ATWS permissive value for ADS initiation is provided in Table 7.2-4.

7.2.2.2.6.7 Redundancy

Four independent channels of the APRM monitor neutron flux. Each channel is associated with one NMS division, with its optically isolated trip signal sent to the other three NMS divisions. The redundancy criteria are met ensuring (in the event of a single failure under permissible APRM bypass conditions) the safety-related protection function is performed as required (with any three of the four divisions of safety-related power available).

7.2.2.2.6.8 Environmental Considerations

Chapter 3 describes the APRM operating environments. The APRM is capable of functioning during and after the DBE in which continued APRM operation is required (Sections 3.10 and 3.11).

7.2.2.2.7 Oscillation Power Range Monitor

7.2.2.2.7.1 General Description

The OPRM consists of four independent safety-related channels. The OPRM channel uses the same set of LPRM signals used by the associated APRM channel in which the OPRM channel resides. Each OPRM receives identical LPRM signals from the corresponding APRM channel as inputs and forms OPRM cells to monitor the thermal neutron flux behavior in all regions of the core. Assignment of LPRMs to the four OPRM channels is shown in Figure 7.2-10.

The OPRM channel consists of OPRM cells formed by grouping LPRM inputs (maximum of four). The OPRM cell signal is the average of all grouped LPRM input signals and is used for detecting

thermal hydraulic instability of the reactor core. The LPRM signals assigned to each cell are summed and averaged to provide an OPRM signal for that cell. The OPRM trip protection algorithm detects thermal hydraulic instability (flux oscillation with unacceptable amplitude and frequency) and provides a trip output if the trip setpoint is exceeded.

7.2.2.2.7.2 Power Sources

The OPRM function resides in the APRM equipment and is supplied with the same redundant APRM 120 VAC power.

7.2.2.2.7.3 (Deleted)

7.2.2.2.7.4 Trip Function

The OPRM trips are combined with the APRM trips of the same APRM channel and sent to the RPS. When there is an insufficient number of operating OPRM cells the OPRM function generates an alarm signifying an inoperative OPRM channel. If the number of operating LPRM inputs to an OPRM cell is less than the minimum required, the cell is considered to be inoperative. Similarly, the channel is inoperative if it does not have enough operating cells. Any cell can cause an OPRM channel alarm or trip condition.

The OPRM channel monitors OPRM cell signal responses and provides alarm and trip signals based on the oscillation detection algorithm defined in a detailed hardware and software design specification document. Any cell can cause an OPRM channel alarm or trip condition.

The OPRM channel trips are sent to the RPS. The OPRM function does not generate an inoperative trip but does generate an alarm signifying an inoperative OPRM channel when there is an insufficient number of operating OPRM cells. (An inoperative OPRM cell is a cell having an insufficient number of operating LPRM inputs).

A summary of OPRM trip functions is provided in Table 7.2-6.

7.2.2.2.7.5 Bypasses and Interlocks

The OPRM alarms and trips are bypassed in all reactor operation modes except Run and when operating below a preset power level. The OPRM bypass is controlled by the APRM channel in which it resides. Bypass of the APRM channel also bypasses the OPRM trip function within this APRM channel.

7.2.2.2.7.6 Redundancy

The OPRM has the same redundancy design as the APRM. The redundancy criteria are met such that, in the event of a single failure under permissible APRM/OPRM bypass conditions, the safety-related protection function is performed as required (with any three of the four divisions of safety-related power available).

7.2.2.2.7.7 Environmental Conditions

The OPRM is subject to the same environmental conditions as the APRM.

7.2.2.3 Safety Evaluation

This evaluation covers the safety-related SRNM, LPRM, APRM, and OPRM functions of the NMS.

The evaluation of the trip inputs from the NMS to the RPS is discussed in Subsection 7.2.1.

The AFIP subsystem and the MRBM are nonsafety-related subsystems of the NMS, and are evaluated in Subsection 7.7.6.

Table 7.1-1 identifies the NMS and the associated codes and standards applied, in accordance with the Standard Review Plan NUREG-0800. This subsection addresses I&C systems conformance to regulatory requirements, guidelines, and industry standards.

7.2.2.3.1 Code of Federal Regulations

10 CFR 50.34(f)(2)(iii)[I.D.1], Human factors engineering principles applied to control room design:

- Conformance: The NMS design conforms to these requirements.

10 CFR 50.34(f)(2)(v)[I.D.3], Bypass and operable automatic status indication of safety systems:

- Conformance: The NMS design conforms to these requirements.

The 12 SRNM channels are divided into four divisions and are independently assigned to four bypass groups such that bypass of up to four SRNM channels at any one time is allowed while still providing the required monitoring and protection capability (with any three of the four divisions of safety-related power available).

10 CFR 50.43(e), Innovative means of accomplishing safety functions:

- Conformance: When innovative means are used in the I&C design it complies with 10 CFR 50.43(e).

10 CFR 50.49, Environmental qualification of electric equipment important to safety for nuclear power plants:

- Conformance: The NMS conforms to these requirements. See Table 3.11-1 (Electrical and Mechanical Equipment for Environmental Qualification).

10 CFR 50.55a(a)(1), Quality standards for systems important to safety:

- Conformance: The NMS design conforms to these standards.

10 CFR 50.55a(h), Protection and safety systems compliance with IEEE Std. 603:

- Conformance: The NMS conforms to IEEE Std. 603. Conformance information is found in Subsections 7.1.6.6.1 through 7.1.6.6.1.27. Additional information concerning how the NMS conforms to IEEE Std. 603 is discussed below.

- IEEE Std. 603, Section 4.2 (Safety-related Functions): See Subsections 7.2.2.1.1.2, 7.2.2.1.2.1, 7.2.2.1.3.1, and 7.2.2.1.4.1.
- IEEE Std. 603, Section 4.3 (Permissive Conditions for Operating Bypasses): See Subsection 7.2.2, Tables 7.2-2 and 7.2-4 for a description of the NMS system Operating Bypasses and Permissive Conditions.
- IEEE Std. 603, Section 4.6 (Spatially Dependent Variables): See Subsections 7.2.2.2.4.3, 7.2.2.2.5.3, 7.2.2.2.6.3, and Figures 7.2-6 through 7.2-10 for a description of the NMS system sensor and location information.
- IEEE Std. 603, Section 5.2 (Completion of Protective Actions): Completion of Protective Actions are not applicable beyond that discussed in Subsection 7.1.6.6.1.3.
- IEEE Std. 603, Section 5.7 (Capability for Test and Calibration): See Subsection 7.2.2.4 for NMS Test and Calibration Capability.
- IEEE Std. 603, Sections 6.2 and 7.2 (Manual Control): Manual Control is not applicable to NMS.
- IEEE Std. 603, Section 6.4 (Derivation of System Inputs): The NMS derives its sense and command features from direct measurements.
- IEEE Std. 603, Section 6.5 (Capability of Test and Calibration): See Subsections 7.2.2.4.1 through 7.2.2.4.2.4 for NMS Test and Calibration Capability.
- IEEE Std. 603, Sections 6.6 and 7.4 (Operating Bypasses): See Section 7.2.2, Tables 7.2-2 and 7.2-4 for a description of the NMS system Operating Bypasses and Permissive Conditions.
- IEEE Std. 603, Sections 6.7 and 7.5 (Maintenance Bypasses): See Subsections 7.2.2.2.4.6, 7.2.2.2.5.6, 7.2.2.2.6.6, 7.2.2.2.7.5 for a description of NMS Maintenance Bypasses.
- IEEE Std. 603, Section 8.2 (Non-Electrical Power Sources): Non-Electrical power sources for the NMS are not applicable beyond that discussed in Subsection 7.1.6.6.1.26.
- IEEE Std. 603, Section 8.3 (Maintenance Bypasses): Maintenance Bypasses for the NMS power sources are not applicable beyond that discussed in Subsection 7.1.6.6.1.27.

10 CFR 50.62, Requirements for reduction of risk from ATWS events for light-water-cooled nuclear power plants:

- Conformance: The NMS conforms to these requirements.

10 CFR 52.47, Contents of applications; technical information, level of design information:

- Conformance: The level of detail provided for the NMS within the DCD conforms to this requirement.

10 CFR 52.47(a)(21), Resolution of unresolved and generic (medium- and high-priority) safety issues identified in NUREG-0933:

- Conformance: Resolution of unresolved and generic safety issues is discussed in Section 1.11.

10 CFR 52.47(a)(25), Interface requirements for portions of the plant not within scope of certified design application:

- Conformance: There are no interface requirements for this section.

10 CFR 52.47(b)(1), ITAAC in design certification application:

- Conformance: ITAAC are provided for I&C systems and equipment in Tier 1.

10 CFR 52.47(c)(2), Innovative means to accomplish safety function design completeness requirements per 10 CFR 50.43(e):

- Conformance: The I&C design may use innovative means for accomplishing safety functions.

7.2.2.3.2 General Design Criteria

GDC 1, 2, 4, 10, 12, 13, 19, 20, 21, 22, 23, 24, 25, 26, 27, and 29:

- Conformance: The NMS design complies with these GDC.

7.2.2.3.3 Staff Requirements Memoranda

SRM on Item II.Q of SECY-93-087:

- Conformance: The NMS design, as part of the safety-related system, minimizes the likelihood of common mode failures, and conforms to this requirement by the implementation of additional diverse I&C system (DPS) capabilities, described in Section 7.8.

7.2.2.3.4 Regulatory Guides

RG 1.22, Periodic Testing of Protection System Actuation Functions:

- Conformance: The NMS design conforms to RG 1.22.

RG 1.47, Bypassed and Inoperable Status Indication for Nuclear Power Plant Safety Systems:

- Conformance: The NMS design conforms to RG 1.47.

RG 1.53, Application of the Single Failure Criterion to Safety Systems:

- Conformance: The NMS is organized into four physically and electrically-isolated divisions that use the principles of independence and redundancy to conform to the single failure criterion as defined by IEEE Std. 379, Section 4, and IEEE Std. 603, Section 5.1; additionally, the design meets N-2 conditions. Analyses complying with IEEE Std. 379 will be used to confirm the safety-related system designs' conformance to the single failure criterion.

RG 1.75, Criteria for Independence of Electrical Safety Systems:

- Conformance: The NMS design conforms to RG 1.75 as described in Subsections 8.3.1.3 and 8.3.1.4.

RG 1.89, Environmental Qualification of Certain Electric Equipment Important to Safety for Nuclear Power Plants:

- Conformance: The NMS design conforms to RG 1.89. See Table 3.11-1 (Electrical and Mechanical Equipment for Environmental Qualification).

RG 1.97, Criteria for Accident Monitoring Instrumentation for Nuclear Power Plants:

- Conformance: The ESBWR I&C conforms to RG 1.97. Specific instruments credited for RG 1.97 compliance are determined as part of the HFE development process as discussed in Subsection 7.5.1.3.4.

RG 1.100, Seismic Qualification of Electric and Mechanical Equipment for Nuclear Power Plants:

- Conformance: The NMS design conforms to RG 1.100. See Sections 3.9 (Mechanical Systems and Components) and 3.10 (Seismic and Dynamic Qualification of Mechanical and Electrical Equipment).

RG 1.105, Setpoints for Safety-Related Instrumentation:

- Conformance: The NMS design conforms to RG 1.105. Reference 7.2-1 provides a detailed description of the GEH setpoint methodology.

RG 1.118, Periodic Testing of Electric Power and Protection Systems:

- Conformance: Periodic testing of the protection systems is performed in accordance with IEEE Std. 338, as modified by RG 1.118.

RG 1.152, Criteria for Use of Computers in Safety Systems of Nuclear Power Plants:

- Conformance: The NMS design conforms to RG 1.152.

RG 1.153, Criteria for Safety Systems:

- Conformance: The NMS is designed to satisfy the requirements of IEEE Std. 603, as endorsed by RG 1.153.

RG 1.168, Verification, Validation, Reviews, and Audits for Digital Computer Software Used in Safety Systems of Nuclear Power Plants:

- Conformance: The NMS design conforms to RG 1.168 as implemented on the NMS platform.

RG 1.169, Configuration Management Plans for Digital Computer Software Used in Safety Systems of Nuclear Power Plants:

- Conformance: The NMS design conforms to RG 1.169 as implemented on the NMS platform.

RG 1.170, Software Test Documentation for Digital Computer Software Used in Safety Systems of Nuclear Power Plants:

- Conformance: The NMS design conforms to RG 1.170 as implemented on the NMS platform.

RG 1.171, Software Unit Testing for Digital Computer Software Used in Safety Systems of Nuclear Power Plants:

- Conformance: The NMS design conforms to RG 1.171 as implemented on the NMS platform.

RG 1.172, Software Requirements Specifications for Digital Computer Software Used in Safety Systems of Nuclear Power Plants:

- Conformance: The NMS design conforms to RG 1.172 as implemented on the NMS platform.

RG 1.173, Developing Software Life Cycle Processes for Digital Computer Software Used in Safety Systems of Nuclear Power Plants:

- Conformance: The NMS design conforms to RG 1.173 as implemented on the NMS platform.

RG 1.180, Guidelines for Evaluating Electromagnetic and Radio-Frequency Interference in Safety-Related Instrumentation and Control Systems:

- Conformance: The NMS design conforms to RG 1.180. See Table 3.11-1 (Electrical and Mechanical Equipment for Environmental Qualification).

RG 1.204, Guidelines for Lightning Protection of Nuclear Power Plants:

- Conformance: The NMS design conforms to RG 1.204.

RG 1.209, Guidelines for Environmental Qualification of Safety-Related Computer-Based Instrumentation and Control Systems in Nuclear Power Plants:

- Conformance: The NMS design conforms to RG 1.209. See Table 3.11-1 (Electrical and Mechanical Equipment for Environmental Qualification).

7.2.2.3.5 **Branch Technical Positions**

BTP HICB-8, Guidance for Application of Regulatory Guide 1.22:

- Conformance: The NMS design conforms to BTP HICB-8.

BTP HICB-10, Guidance on Application of Regulatory Guide 1.97:

- Conformance: The ESBWR I&C conforms to RG 1.97. Specific instruments credited for RG 1.97 compliance are determined as part of the HFE development process as discussed in Section 7.5.

BTP HICB-11, Guidance on Application and Qualification of Isolation Devices:

- Conformance: The NMS design conforms to BTP HICB-11. The NMS equipment uses safety-related fiber-optic CIMs and fiber-optic cables for interconnections between

safety-related divisions for data exchange and for interconnections between safety-related and nonsafety-related devices to meet the requirements of RG 1.75 and RG 1.153.

BTP HICB-12, Guidance on Establishing and Maintaining Instrument Setpoints:

- Conformance: The analytical limits of the safety-related setpoints of the NMS are determined from safety analyses for each reactor fuel cycle to ensure the reactor core is protected from any rising neutron flux potentially exceeding these values. The nominal setpoints are calculated to be consistent with the GEH standard setpoint methodology (Reference 7.2-1), which conforms to RG 1.105. The setpoint margin calculated by this method also has considered additional uncertainties with the calibration interval. Therefore, the NMS meets BTP HICB-12.

Most of the uncertainty associated with safety-related NMS trip setpoints is associated with the various neutron sensors because the digital electronics in the NMS do not drift, the setpoints are monitored and indicated by the PCF of N-DCIS.

BTP HICB-14, Guidance on Software Reviews for Digital Computer-Based Instrumentation and Control Systems:

- Conformance: *Development of software for the safety-related system functions within NMS conforms to the guidance of BTP HICB-14 as discussed in the LTRs "ESBWR - Software Management Program Manual" (Reference 7.2-3) and "ESBWR - Software Quality Assurance Program Manual" (Reference 7.2-4). Safety-related software to be embedded in the memory of the NMS logics is developed according to a structured plan described in References 7.2-3 and 7.2-4. These plans follow the software life cycle process described in BTP HICB-14.*

BTP HICB-16, Guidance on the Level of Detail Required for Design Certification Applications Under 10 CFR Part 52:

- Conformance: The NMS section content conforms to BTP HICB-16.

BTP HICB-17, Guidance on Self-Test and Surveillance Test Provisions:

- Conformance: The safety-related subsystems of the NMS are designed to support the required periodic testing. (Refer to Subsection 7.2.2.4.) The NMS system equipment features a self-test design operating in all modes of plant operations. This self-test function does not interfere with the safety-related functions of the system. The NMS design conforms to BTP HICB-17.

BTP HICB-18, Guidance on the Use of Programmable Logic Controllers in Digital Computer-Based Instrumentation and Control Systems:

- Conformance: Q-DCIS hardware, embedded and operating system software, and peripheral components conform to the guidance of BTP HICB-18. Q-DCIS is built and qualified specifically for ESBWR applications as safety-related and not as commercial grade PLCs. The embedded and operating system software meet the acceptance criteria contained in BTP HICB-14, for safety-related applications.

BTP HICB-19, Guidance for Evaluation of Defense-in-Depth and Diversity in Digital Computer-Based Instrumentation and Control Systems:

- Conformance: The NMS design conforms to BTP HICB-19 by implementation of an additional diverse instrumentation and control system described in Section 7.8.

BTP HICB-21, Guidance on Digital Computer Real-Time Performance:

- Conformance: The SRNM/APRM digital subsystems (and the OPRM digital subsystem) are designed to respond in real time to ensure that specified fuel limits are not exceeded, and core power oscillations are detected and suppressed. The NMS conforms to BTP HICB-21.

7.2.2.3.6 Three Mile Island Action Plan Requirements

In accordance with the SRP for Chapter 7, and with Table 7.1-1, 10 CFR 50.34(f)(2)(v)[I.D.3] applies to the NMS and is addressed in Subsection 7.2.2.3.1.

TMI action plan requirements are generically addressed in Table 1A-1 of Appendix 1A.

7.2.2.4 Testing and Inspection Requirements

7.2.2.4.1 General Requirements

NMS instruments (not including sensors) outside the containment are designed so they can be tested, inspected, and calibrated as required during plant operation without causing plant shutdown or scram and with access for the service personnel.

NMS instrument modules, including SRNM and APRM, are designed with the capability of being tested for normal performance, trip performance, and calibration function through either an automated or manual process. Routine surveillance functions, including periodic tests and calibration, are automated with minimum operator involvement.

Detailed NMS instrument test function requirements, including periodic tests and calibration durations for each instrument, are included in the detailed NMS hardware and software system specification document.

For micro-processor based instruments an instrument unit self-test function is provided.

7.2.2.4.2 Specific Requirements

7.2.2.4.2.1 Startup Range Neutron Monitor Testability and Calibration

Each SRNM channel is tested and calibrated using the procedures listed in the SRNM instruction manual. Each SRNM channel is checked when the reactor mode switch is not in "Run" to ensure that the SRNM high flux scram function and short period scram function are operable. Portions of the required testing may be performed in other operating Modes. See Subsection 7.2.2.4 for a description of SRNM inspection and testing requirements.

7.2.2.4.2.2 Local Power Range Monitor Testability and Calibration

LPRM channels are calibrated using data from the AFIP subsystem and based on PCF three-dimensional core power distribution calculations. The calibration follows procedures in the applicable instruction manual.

7.2.2.4.2.3 Average Power Range Monitor Testability and Calibration

APRM channels are calibrated using data from the PCF reactor heat balance calculation. The calibration follows procedures in the applicable instruction manual. Each APRM channel is checked individually (by introduction of test signals) for operability of the APRM high neutron flux scram and rod-blocking functions.

7.2.2.4.2.4 Oscillation Power Range Monitor Testability and Calibration

Each OPRM channel can be checked individually (by introduction of test signals) for operability of the OPRM trip protection algorithm.

7.2.2.5 Instrumentation and Control Requirements

7.2.2.5.1 Instrumentation Requirements

The design of NMS instruments primarily is based on digital I&C practices with digital electronics-based programmable and memory units. The NMS instruments follow a modular design concept so each modular unit or its subunit is easily replaceable. Each instrument has a flexible interface design to accommodate either metal wire or fiber-optic communication links.

NMS instruments are provided with necessary operator-interface functions based on adequate NMS man-machine interface (MMI) requirements.

The NMS displays provided in the MCR, as a minimum, include:

- SRNM reactor period, power level, and count rate (12).
- SRNM upscale/ inoperable trip and reactor period trip status.
- SRNM upscale rod block, reactor period rod block, and downscale rod block status.
- SRNM channel bypass status.
- SRNM period based permissive.
- SRNM ATWS permissive status.
- LPRM bypass status, LPRM upscale alarm, and LPRM downscale alarm status (256 each).
- Number of bypassed LPRMs per APRM channel.
- APRM power level (4).
- APRM bypass status (4).

- APRM divisional reactor upscale/inoperable trip, upscale rod block, and downscale rod block status.
- APRM simulated thermal power level (4).
- APRM simulated thermal power upscale trip status.
- APRM ATWS permissive status (4).
- OPRM divisional trip status.
- MRBM main channel bypass status.
- MRBM main channel rod block status.
- AFIP system operability status.

The alarms in the MCR include:

- SRNM non-coincident upscale trip
- SRNM non-coincident upscale rod block
- SRNM downscale rod block
- SRNM short period trip, short period rod block
- SRNM inoperative trip
- SRNM period withdrawal permissive alarm
- LPRM upscale, downscale alarm
- APRM upscale trip
- APRM upscale rod block, downscale rod block
- APRM simulated thermal power upscale trip
- APRM simulated thermal power rod block
- APRM system inoperative trip
- MRBM upscale rod block, downscale, inoperative rod block
- AFIP inoperative
- OPRM trip

The above NMS displays and alarms fulfill the information display requirements of the IEEE Std. 603, Section 5.8.

7.2.2.5.2 **Basic Control Logic Requirements**

The control logic of the safety-related subsystems in the NMS is "fail-safe." That is, a trip signal is initiated if the control logic device fails due to critical hardware failure, power failure, or loss of communication failure.

The NMS controls located in the MCR panel include:

- SRNM channel bypass controls (one for each bypass group) (hardware).
- APRM channel bypass control (one for each division) (hardware).
- Coincident/non-coincident switch. In the non-coincident position (not in Run mode), any single SRNM channel trip condition sends a trip signal to the RPS and causes a reactor scram.

Each SRNM, LPRM, OPRM, or APRM channel can be individually bypassed. Restrictions on the total number and distribution of bypassed channels (at one time) are followed to avoid a reactor trip due to inoperative NMS channels.

Each of the 12 SRNM channels belongs to one of the four bypass groups. Each group has one "multiple position" selector switch so only one SRNM channel in each group is capable of being bypassed at a time. The SRNM channel bypassed status is displayed on the NMS user interface.

The APRM equipment allows the operator to bypass any one of the four APRM channels during normal plant operation. The APRM channel bypassed status is displayed on the NMS user interface. The trip logic at the NMS becomes two-out-of-three instead of two-out-of-four.

There are separate bypass functions for the SRNM and APRM in the NMS. (There is no single NMS divisional bypass affecting both the SRNM and the APRM.) An APRM bypass does not force an SRNM bypass. The SRNM and APRM bypasses are separate logics to NMS. All NMS bypass logic control functions are located within NMS but none are located in the RPS. Use of SRNM and APRM bypasses does not adversely affect the ATWS permissive and ADS inhibit output functions.

Individual LPRM channels are bypassed by first confirming, for a given APRM channel, that the minimum LPRM input requirement is still met after the bypasses are completed. The operator has to input the LPRM designator to be bypassed, then switch it into bypass. The LPRM channel bypassed status is displayed on the NMS user interface. If the maximum allowed number of bypassed LPRMs associated with any APRM channel is exceeded an inoperative trip is automatically generated by that APRM channel.

A failure that causes a channel to become inoperative causes a channel trip output to the NMS.

When the Reactor Mode Switch is in the Run position, the NMS is in a coincident mode. SRNM trips are active only when the Reactor Mode Switch is not in the Run position. If the manual coincident/non-coincident switch is in the non-coincident position when the Reactor Mode Switch is placed in the run position an alarm is generated in the MCR. When the NMS is in non-coincident mode, any one of the SRNMs channel trips can cause a reactor scram; in the coincident mode, at least two-out-of-four divisions must be tripped in order to activate the reactor scram.

7.2.2.5.3 Basic Instrument Arrangement Requirements

NMS instruments and equipment are located in appropriate areas in the CB and RB with appropriate divisional physical and electrical separation.

Figures 7.2-4 and 7.2-12 provide a more detailed view of the NMS configuration and communication paths.

The NMS is implemented with two communication methodologies: point-to-point optical fiber inter-divisional communication and a shared memory data communication ring network. Point-to-point communication is limited to trip and bypass information and any necessary message authentication. Point-to-point fiber is also used NMS to RPS and NMS to SSLC/ESF communication. Since the NMS is "fail safe" the loss of any communication or fiber will be interpreted as a trip. The other communication methodology uses a shared memory data communication ring network that extends between the various NMS system chassis. The data communication processors of each chassis (nodes) connected to the data communication ring can read the entire shared memory on the communication interface module (CIM) card and write only to a designated portion of the CIM card memory. The data on the data communication ring are actively transported between one chassis transmitter and another's receiver until all nodes have been updated. To increase reliability, another data communication ring (forming a counter-rotating data communication ring) is provided with the data going in the opposite direction, this scheme allows both data communication rings to be broken between two nodes and all data still gets to all nodes; no single failure will prevent data transmission.

There are two "counter rotating" data communication rings within each division of NMS. The upper data communication ring on Figure 7.2-12 interconnects the RMU, DTM, TLU and RTIF-NMS Q-CIM which are the only chassis needed to support the NMS safety functions. This is the (redundant) path by which the RMUs transfer data to the DTMs and, in turn to the TLUs as described above. Note that the BPU is not on the shared memory data communication ring because the BPU is implemented in hardware logic.

There is a second redundant data communication ring that interconnects the above chassis and additionally nonsafety-related operator and maintenance VDUs in the NMS and RMU cabinets and on the safety surveillance panel in the MCR (the safety-related function of this VDU is Seismic Category II). Additionally, on this data communication ring are two nonsafety-related N-CIM (NMS N-CIM A and NMS N-CIM B), each of which has access to the equivalent data communication rings of the other three divisions and therefore all NMS divisional data.

The VDUs may be used at any time to monitor NMS signals and internal diagnostics; however, they cannot input to any of the NMS chassis for calibration or maintenance purposes unless the chassis or NMS division has been made inoperable by a keylock switch. Inoperable corresponds to a trip unless the division has been bypassed. The inoperable status is alarmed.

7.2.3 Suppression Pool Temperature Monitoring

The SPTM function of the CMS, is classified as safety-related.

7.2.3.1 System Design Bases

7.2.3.1.1 Safety-Related Design Bases

The safety-related functional requirement of the SPTM is to prevent the suppression pool temperature from exceeding established limits. It does this by providing the inputs necessary for automatic reactor scram initiation, which limits heat addition to the suppression pool.

The SPTM function is physically implemented by the safety-related four-divisional subsystem, designed for Seismic Category I requirements.

The SPTM function also provides:

- Safety-related inputs to the MCR for indication.

7.2.3.1.2 Nonsafety-Related Design Bases

The nonsafety-related SPTM functional requirements are:

- To provide input for automatic suppression pool cooling mode initiation
- To provide input for data display, alarm, and recording on the MCR panels

7.2.3.2 System Description

7.2.3.2.1 General

The SPTM function provides suppression pool temperature data for automatic scram and automatic suppression pool cooling initiation when established high temperature limits are exceeded. In addition, the SPTM function provides suppression pool temperature data for operator information and recording, and for post-accident conditions of the suppression pool. The SPTM function outputs to other systems are shown in Table 7.2-5.

7.2.3.2.2 Power Sources

The SPTM hardware is powered by the appropriate dual divisional redundant 120 VAC UPS - either of which can support the SPTM function.

7.2.3.2.3 Equipment Design

The SPTM function comprises four independent safety-related instrumentation divisions, each containing 16 sensors spatially distributed around the suppression pool. The sensor locations are established to:

- Provide four-divisional, redundant measurements of suppression pool local and bulk-mean temperatures under normal plant operating conditions and under postulated accident and post-accident conditions.

- Implement the divisional separation of sensors in the azimuthal directions, with redundancy and separation of sensors realized in four divisions and with sensors appropriately covering the different elevations of the pool.
- Locate sensors away from jet paths of SRV quenchers, horizontal vent discharges, and Passive Containment Cooling System (PCCS) vent line discharges. This limits the temperature differences between local and bulk-mean values.

The sensor electrical wiring, encapsulated in pliable, grounded sheathing, is terminated in wetwell-sealed, moisture-proof junction boxes for sensor replacement or maintenance during a plant outage. The temperature sensor wiring from the wetwell junction boxes is directed through the suppression pool divisional instrument penetrations to the four-divisional Q-DCIS RMUs.

7.2.3.2.4 Signal Processing

The SPTM function supports measurement and calculation of bulk average suppression pool temperatures for both normal operation and DBA conditions. A minimum number of thermocouples per division is required to be operational. The SPTM logic automatically compensates for inoperable thermocouples. If less than the required number of thermocouples is available a trip signal is generated in that division. These signals are transmitted through the divisional Q-DCIS to the RPS. Safety-related protective actions are generated by the RPS. Abnormal status alarms, data display, and recording are provided.

7.2.3.3 Safety Evaluation

Table 7.1-1 identifies the SPTM function and the associated codes and standards applied, in accordance with the Standard Review Plan, NUREG-0800. This subsection addresses I&C systems conformance to regulatory requirements, guidelines, and industry standards.

7.2.3.3.1 Code of Federal Regulations

10 CFR 50.34(f)(2)(iii)[I.D.1], Human factors engineering principles applied to control room design:

- Conformance: The SPTM function conforms to these requirements.

10 CFR 50.34(f)(2)(v)[I.D.3], Bypass and operable automatic status indication of safety systems:

- Conformance: The SPTM function conforms to these requirements.

10 CFR 50.49, Environmental qualification of electric equipment important to safety for nuclear power plants:

- Conformance: The SPTM function conforms to these requirements. See Table 3.11-1 (Electrical and Mechanical Equipment for Environmental Qualification).

10 CFR 50.55a(a)(1), Quality standards for systems important to safety:

- Conformance: The SPTM function conforms to this requirement for the use of the applicable standards.

10 CFR 50.55a(h), Protection and safety systems compliance with IEEE Std. 603:

- Conformance: The SPTM function conforms to IEEE Std. 603. Conformance information is found in Subsections 7.1.6.6.1 through 7.1.6.6.1.27. Additional information concerning how the SPTM function conforms to IEEE Std. 603 is discussed below.
  - IEEE Std. 603, Section 4.2 (Safety-related Functions): See Subsection 7.2.3.1.1.
  - IEEE Std. 603, Section 4.3 (Permissive Conditions for Operating Bypasses): Permissive conditions for operating bypasses are not applicable to the SPTM function.
  - IEEE Std. 603, Section 4.6 (Spatially Dependent Variables): Spatial dependency requirements of the SPTM function are described in Subsection 7.2.1.2.4.2.
  - IEEE Std. 603, Section 5.2 (Completion of Protective Actions): Completion of Protective Actions are not applicable beyond that discussed in Subsection 7.1.6.6.1.3.
  - IEEE Std. 603, Section 5.7 (Capability for Test and Calibration): Subsection 7.2.3.4 describes testing requirements specific to the SPTM function.
  - IEEE Std. 603, Sections 6.2 and 7.2 (Manual Control): Manual Control is not applicable to the SPTM function.
  - IEEE Std. 603, Section 6.4 (Derivation of System Inputs): SPTM inputs are derived from direct measures.
  - IEEE Std. 603, Section 6.5 (Capability of Test and Calibration): Subsection 7.2.3.4 describes testing requirements specific to the SPTM function.
  - IEEE Std. 603, Sections 6.6 and 7.4 (Operating Bypasses): Operating bypasses are not applicable to the SPTM function.
  - IEEE Std. 603, Sections 6.7 and 7.5 (Maintenance Bypasses): Maintenance bypasses for the SPTM function are adequately described in Subsection 7.1.6.6.1.23.
  - IEEE Std. 603, Section 8.2 (Non-Electrical Power Sources): Non-Electrical power sources for the SPTM function are not applicable beyond that discussed in Subsection 7.1.6.6.1.26.
  - IEEE Std. 603, Section 8.3 (Maintenance Bypasses): Maintenance Bypasses for the SPTM function are not applicable beyond that discussed in Subsection 7.1.6.6.1.27.

10 CFR 52.47, Contents of applications; technical information, level of design information:

- Conformance: The level of detail provided for the SPTM function within the DCD conforms to this requirement.

10 CFR 52.47(a)(21), Resolution of unresolved and generic (medium- and high-priority) safety issues identified in NUREG-0933:

- Conformance: Resolution of unresolved and generic safety issues is discussed in Section 1.11.

10 CFR 52.47(a)(25), Interface requirements for portions of the plant not within scope of certified design application:

- Conformance: There are no interface requirements for this section.

10 CFR 52.47(b)(1), ITAAC in design certification application:

- Conformance: ITAAC are provided for the I&C systems and equipment in Tier 1.

10 CFR 52.47(c)(2), Innovative means to accomplish safety function design completeness requirements per 10 CFR 50.43(e):

- Conformance: The I&C design does not use innovative means for accomplishing safety functions.

7.2.3.3.2 General Design Criteria

GDC 1, 2, 4, 13, 19, 20, 21, 22, 23, 24, and 29:

- Conformance: The SPTM function complies with these GDC.

7.2.3.3.3 Staff Requirements Memoranda

SRM on Item II.Q of SECY-93-087:

- Conformance: The SPTM function conforms to these criteria by the implementation of diverse I&C system (DPS) as described in Section 7.8.

7.2.3.3.4 Regulatory Guides

RG 1.22, Periodic Testing of Protection System Actuation Functions:

- Conformance: The SPTM function conforms to RG 1.22.

RG 1.47, Bypassed and Inoperable Status Indication for Nuclear Power Plant Safety Systems:

- Conformance: The SPTM function conforms to RG 1.47.

RG 1.53, Application of the Single Failure Criterion to Safety Systems:

- Conformance: The SPTM is organized into four physically and electrically-isolated divisions that use the principle of independence and redundancy to conform to the single failure criterion as defined by IEEE Std. 379, Section 4, and IEEE Std. 603, Section 5.1; additionally, the design meets N-2 conditions. Analyses complying with IEEE Std. 379 will be used to confirm the safety-related system designs' conformance to the single failure criterion.

RG 1.75, Criteria for Independence of Electrical Safety Systems:

- Conformance: The SPTM function conforms to RG 1.75 as described in Subsections 8.3.1.3 and 8.3.1.4.

RG 1.89, Environmental Qualification of Certain Electric Equipment Important to Safety for Nuclear Power Plants:

- Conformance: The SPTM function conforms to RG 1.89. See Table 3.11-1 (Electrical and Mechanical Equipment for Environmental Qualification).

RG 1.97, Criteria for Accident Monitoring Instrumentation for Nuclear Power Plants:

- Conformance: The ESBWR I&C conforms to RG 1.97. Specific instruments credited for RG 1.97 compliance are determined as part of the HFE development process as discussed in Section 7.5.

RG 1.100, Seismic Qualification of Electric and Mechanical Equipment for Nuclear Power Plants:

- Conformance: The SPTM function conforms to RG 1.100. See Sections 3.9 (Mechanical Systems and Components) and 3.10 (Seismic and Dynamic Qualification of Mechanical and Electrical Equipment).

RG 1.105, Setpoints for Safety-Related Instrumentation:

- Conformance: The SPTM function conforms to RG 1.105. Reference 7.2-1 provides a detailed description of the GEH setpoint methodology.

RG 1.118, Periodic Testing of Electric Power and Protection Systems:

- Conformance: Periodic testing of the protection systems is performed in accordance with IEEE Std. 338, as modified by RG 1.118.

RG 1.151, Instrument Sensing Lines:

- Conformance: The SPTM function conforms to RG 1.151.

RG 1.152, Criteria for Use of Computers in Safety Systems of Nuclear Power Plants:

- Conformance: The SPTM function conforms to RG 1.152.

RG 1.153, Criteria for Safety Systems:

- Conformance: The SPTM is designed to satisfy the requirements of IEEE Std. 603, as endorsed by RG 1.153.

RG 1.168, Verification, Validation, Reviews, and Audits for Digital Computer Software Used in Safety Systems of Nuclear Power Plants:

- Conformance: The SPTM function conforms to RG 1.168 as implemented on the RTIF platform.

RG 1.169, Configuration Management Plans for Digital Computer Software Used in Safety Systems of Nuclear Power Plants:

- Conformance: The SPTM function conforms to RG 1.169 as implemented on the RTIF platform.

RG 1.170, Software Test Documentation for Digital Computer Software Used in Safety Systems of Nuclear Power Plants:

- Conformance: The SPTM function conforms to RG 1.170 as implemented on the RTIF platform.

RG 1.171, Software Unit Testing for Digital Computer Software Used in Safety Systems of Nuclear Power Plants:

- Conformance: The SPTM function conforms to RG 1.171 as implemented on the RTIF platform.

RG 1.172, Software Requirements Specifications for Digital Computer Software Used in Safety Systems of Nuclear Power Plants:

- Conformance: The SPTM function conforms to RG 1.172 as implemented on the RTIF platform.

RG 1.173, Developing Software Life Cycle Processes for Digital Computer Software Used in Safety Systems of Nuclear Power Plants:

- Conformance: The SPTM function conforms to RG 1.173 as implemented on the RTIF platform.

RG 1.180, Guidelines for Evaluating Electromagnetic and Radio-Frequency Interference in Safety-Related Instrumentation and Control Systems:

- Conformance: The SPTM function conforms to RG 1.180. See Table 3.11-1 (Electrical and Mechanical Equipment for Environmental Qualification).

RG 1.204, Guidelines for Lightning Protection of Nuclear Power Plants:

- Conformance: The SPTM function conforms to RG 1.204.

RG 1.209, Guidelines for Environmental Qualification of Safety-Related Computer-Based Instrumentation and Control Systems in Nuclear Power Plants:

- Conformance: The SPTM function conforms to RG 1.209 See Table 3.11-1 (Electrical and Mechanical Equipment for Environmental Qualification).

7.2.3.3.5 **Branch Technical Positions**

BTP HICB-8, Guidance for Application of Regulatory Guide 1.22:

- Conformance: The SPTM function conforms to BTP HICB-8.

BTP HICB-10, Guidance on Application of Regulatory Guide 1.97:

- Conformance: The ESBWR I&C conforms to RG 1.97. Specific instruments credited for RG 1.97 compliance are determined as part of the HFE development process as discussed in Section 7.5.

BTP HICB-11, Guidance on Application and Qualification of Isolation Devices:

- Conformance: The SPTM function conforms to BTP HICB-11. RTIF logic controllers for the SPTM use safety-related fiber-optic CIMs and fiber-optic cables for interconnections between safety-related divisions for data exchange and for interconnections between safety-related and nonsafety-related devices.

BTP HICB-12, Guidance on Establishing and Maintaining Instrument Setpoints:

- Conformance: The SPTM function conforms to BTP HICB-12.

BTP HICB-14, Guidance on Software Reviews for Digital Computer-Based Instrumentation and Control Systems:

- Conformance: The SPTM function conforms to BTP HICB-14.

BTP HICB-16, Guidance on the Level of Detail Required for Design Certification Applications Under 10 CFR Part 52:

- Conformance: The SPTM function conforms to BTP HICB-16.

BTP HICB-17, Guidance on Self-Test and Surveillance Test Provisions:

- Conformance: The SPTM function conforms to BTP HICB-17.

BTP HICB-19, Guidance for Evaluation of Defense-in-Depth and Diversity in Digital Computer-Based Instrumentation and Control Systems:

- Conformance: The SPTM function conforms to BTP HICB-19. The implementation of an additional diverse instrumentation and control system is described in Section 7.8.

BTP HICB-21, Guidance on Digital Computer Real-Time Performance:

- Conformance: The SPTM function conforms to BTP HICB-21.

7.2.3.3.6 TMI Action Plan Requirements

In accordance with the SRP for Section 7.2 and with Table 7.1-1, only I.D.3 applies to the SPTM function. This is addressed in Subsection 7.2.3.3.1 for 10 CFR 50.34(f)(2)(v)[I.D.3]. TMI action plan requirements are generically addressed in Table 1A-1 of Appendix 1A.

7.2.3.4 Testing and Inspection Requirements

Proper functioning of analog temperature sensors is verified by channel cross-comparison during the plant normal operation mode. The bulk pool temperatures are continuously compared between divisions and indicated by the PCF.

Each of four SPTM safety-related divisions is testable during plant normal operation to determine the operational availability of the system. Each safety-related SPTM division has the capability for testing, adjustment, and inspection during a plant outage.

7.2.3.5 Instrumentation and Controls Requirements

The I&C requirements related to SPTM are addressed in Subsections 7.2.3.1 and 7.2.3.2.

7.2.4 COL Information

None.

7.2.5 References

7.2-1 GE Hitachi Nuclear Energy, "GEH ESBWR Setpoint Methodology," NEDE-33304P, Class III (Proprietary), Revision 4, May 2010, and NEDO-33304, Class II (Non-proprietary), Revision 4, May 2010.

7.2-2 (Deleted)

7.2-3 GE Hitachi Nuclear Energy, "ESBWR - Software Management Program Manual," NEDE-33226P, Class III (Proprietary), Revision 5, February 2010, and NEDO-33226, Class I (Non-proprietary), Revision 5, February 2010.

7.2-4 GE Hitachi Nuclear Energy, "ESBWR - Software Quality Assurance Program Manual)," NEDE-33245P, Class III (Proprietary), Revision 5, February 2010, and NEDO-33245, Class I (Non-proprietary), Revision 5, February 2010.

Table 7.2-1 Sensors Used in Functional Performance of RPS

Sensor Description	Number of Sensors
NMS (LPRM)	256
NMS (SRNM)	12
NBS reactor vessel pressure	4
Drywell pressure	4
RPV narrow range water level	4
Scram accumulator charging water header pressure	4
MSIV position switch contacts	32
TSV position switches	4
TCV hydraulic trip system oil pressure	4
TBV position switches	48
Power generation bus voltage (Loss of All FW flow)	4
Condenser pressure	12
Suppression pool temperature	64
Feedwater temperature	8

Table 7.2-2 SRNM Trips and Rod Blocks

Trip/Block Description	Trip/Block Value(1)	Function	Comments
SRNM Short Period Trip	10 seconds	Scram	Bypassed in RUN mode Coincident and non-coincident modes (2)
SRNM Short Period Alarm	20 seconds	Rod Block	Bypassed in RUN mode Coincident and non-coincident modes
SRNM Period Withdrawal Permissive	55 seconds	Rod Block	Bypassed in RUN mode Coincident and non-coincident modes Signal is a permissive for automated rod motion
SRNM Inoperable	Critical SRNM fault, module interlock disconnect; HV (excitation) voltage low	Scram and Rod Block	Bypassed in RUN mode Coincident and non-coincident modes
SRNM Downscale Alarm	3 cps	Rod Block	Bypassed in RUN mode Coincident and non-coincident modes
SRNM Upscale Flux Trip	5E+5 cps	Scram	Bypassed in RUN mode Non-coincident mode only Count rate range only
SRNM Upscale Flux Alarm	1E+5 cps	Rod Block	Bypassed in RUN mode Non-coincident mode only Count rate range only
SRNM ATWS Permissive	6% rated thermal power	Permissive signal to ATWS/SLC system (all modes)	Coincident and non-coincident modes

Notes:

1. Instrument setpoint accuracy is determined by safety analyses using GEH instrument setpoint methodology (Reference 7.2-1).
2. Coincident and non-coincident modes controlled by plant procedures.

Table 7.2-3 SRNM Trip Signals

			Indicator Type		
Condition (1) , (5)	**Rod Block**	**N-DCIS**	**Alarm**	**Indication**	**Reactor Trip(4)**
Upscale Trip (2)		X	X	X	X
Upscale Alarm	X	X	X	X	
Period Trip(3)		X	X	X	X
Period Alarm	X	X	X	X	
Period Withdrawal Permissive	X	X	X	X	
Inoperative	X	X	X	X	X
Downscale Alarm	X	X	X	X	
Channel Bypass		X		X	

Notes:

1. No trips are active in Run mode or for a bypassed channel; however, they are active in other operating modes.
2. This trip is operable in the non-coincident mode.
3. For trip conditions, see Subsection 7.2.2.1.1.1.
4. This refers to channel/division trip signal provided to RPS.
5. These signals are all sent to N-DCIS for monitoring, alarming and recording. They are also available on safety-related displays.

Table 7.2-4 APRM Trip Function Summary

Trip Function	Analytical Limit For Trip Setpoint (1)	Action
APRM Upscale Flux Trip	125% rated thermal power 15% rated thermal power	Scram (only in Run) Scram (not in Run)
APRM Upscale Flux Alarm	108% rated thermal power 12% rated thermal power	Rod Block (only in Run) Rod Block (not in Run)
APRM Upscale Simulated Thermal Power Trip	115% rated thermal power	Scram
APRM Inoperative	1. LPRM inputs too few; 2. Module interlocks disconnect	Scram & Rod Block Scram & Rod Block
APRM ATWS Permissive	6% rated thermal power	ADS Permissive signal to SSLC system (all modes)
APRM Downscale	5% rated thermal power	Rod Block (only in Run)

Note:

1. Instrument setpoint accuracy is determined by safety analyses using GEH instrument setpoint methodology of Reference 7.2-1.

Table 7.2-5 Outputs from SPTMs to Other Systems

Signal	Utilization
Sixteen divisional suppression pool local temperature signals to each safety-related DCIS RMU (in each of 4 divisions).	Input for divisional scram initiation and temperature status display within SSLC/ESF and RPS. Input for non-divisional suppression pool cooling mode initiation (FAPCS). Input for non-divisional suppression pool temperature data display, alarm and recording (within N-DCIS & MCR).

Table 7.2-6 OPRM Trip Function Summary

Trip Function	Analytical Limit For Trip Setpoint (1)	Action
OPRM Inoperative	LPRM inputs too few	OPRM Cell/Channel Alarm
OPRM Oscillation Detection	See Table 4D-5 Defense-In-Depth Algorithm Setpoints	Channel Trip
OPRM Oscillation Detection	See Table 4D-5 Defense-In-Depth Algorithm Setpoints	Channel Alarm
OPRM Bypass	N/A	Controlled by APRM bypass

Note:

1. Instrument setpoint accuracy is determined by safety analyses using GEH instrument setpoint methodology of Reference 7.2-1.

Figure 7.2-1 RPS Simplified Functional Block Diagram

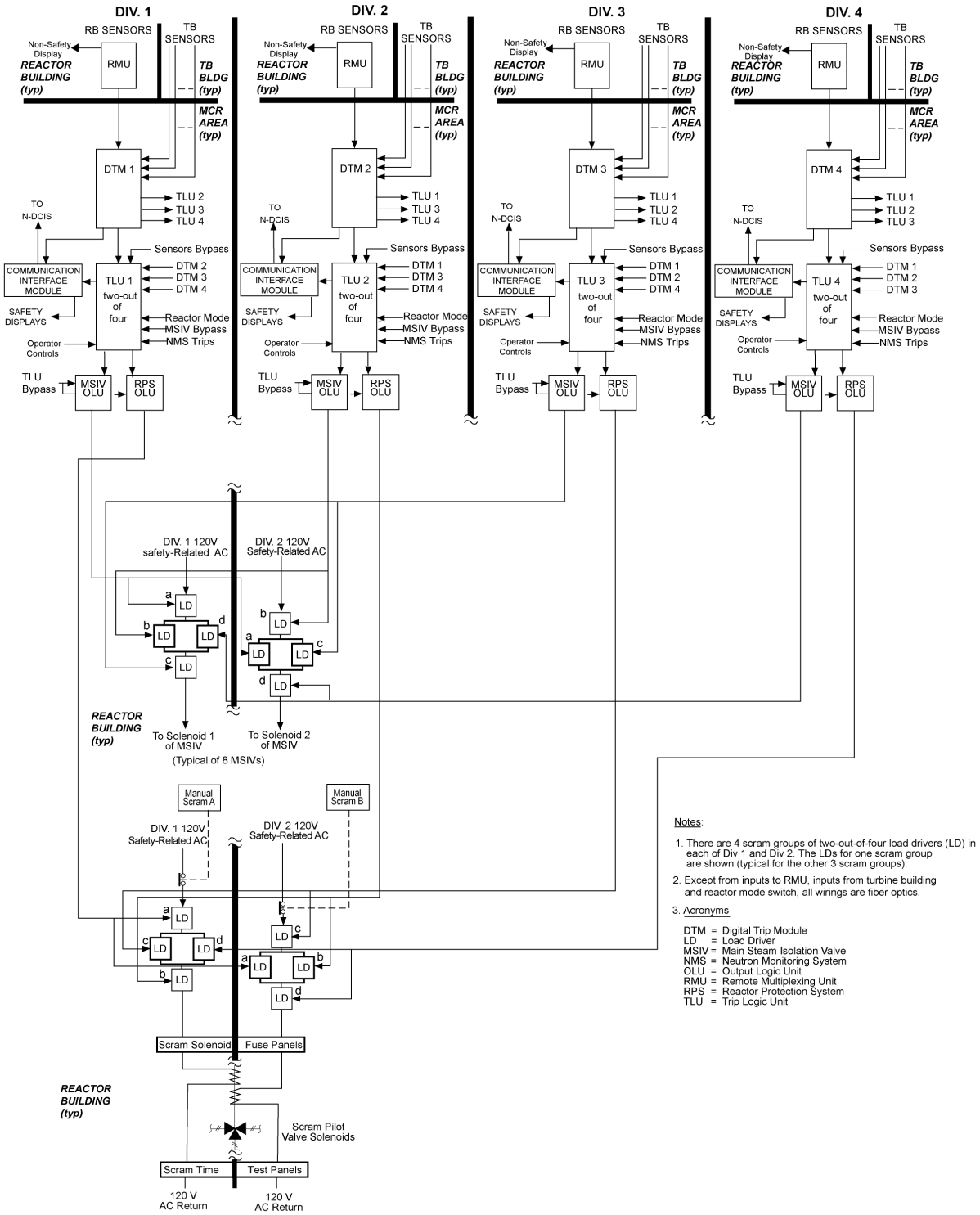

Figure 7.2-2 RPS Interfaces and Boundaries Diagram

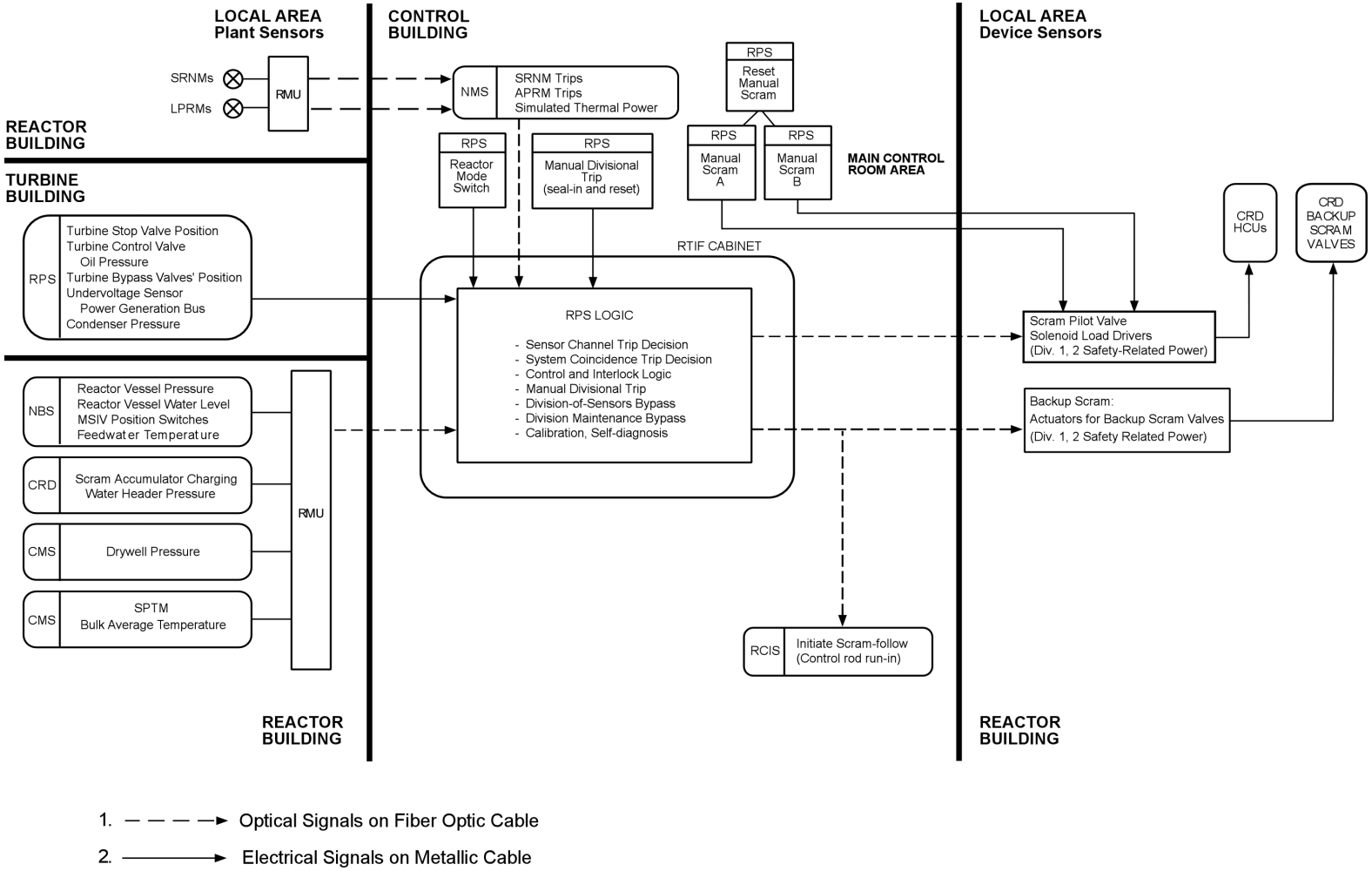

Figure 7.2-3 Neutron Flux Monitoring Ranges

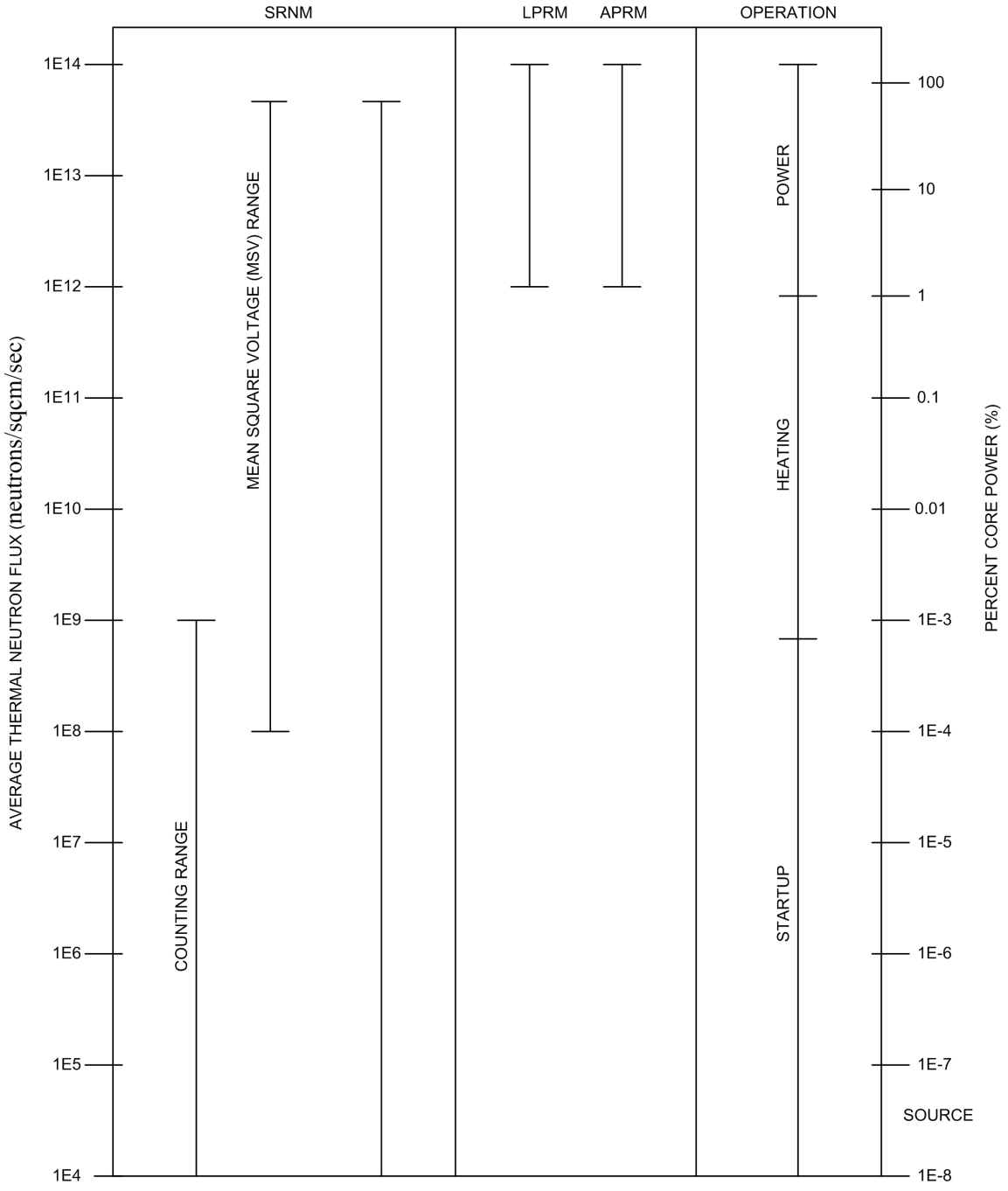

Figure 7.2-4 Basic Configuration of a Typical SRNM Subsystem

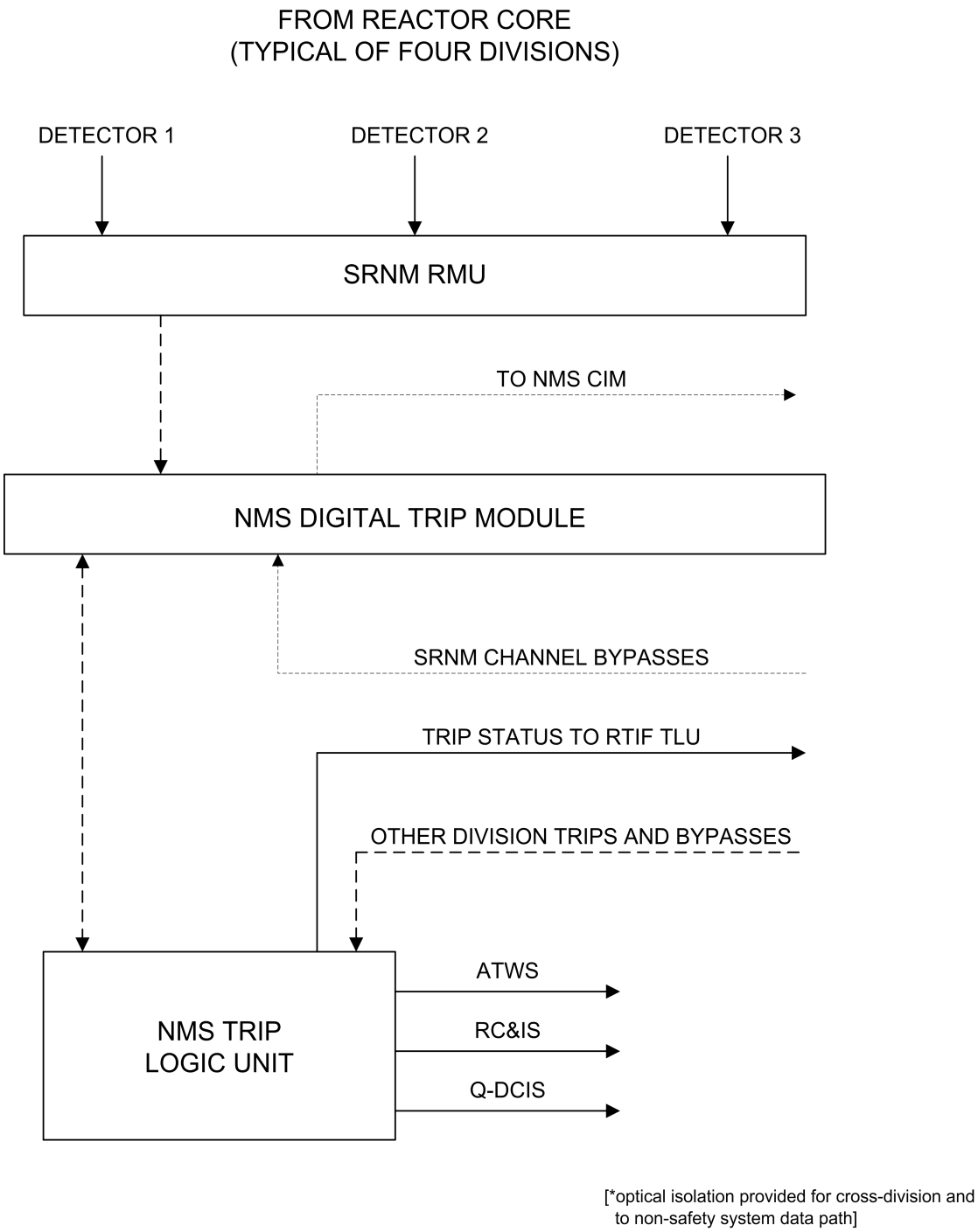

Figure 7.2-5 Basic Configuration of a Typical PRNM Subsystem

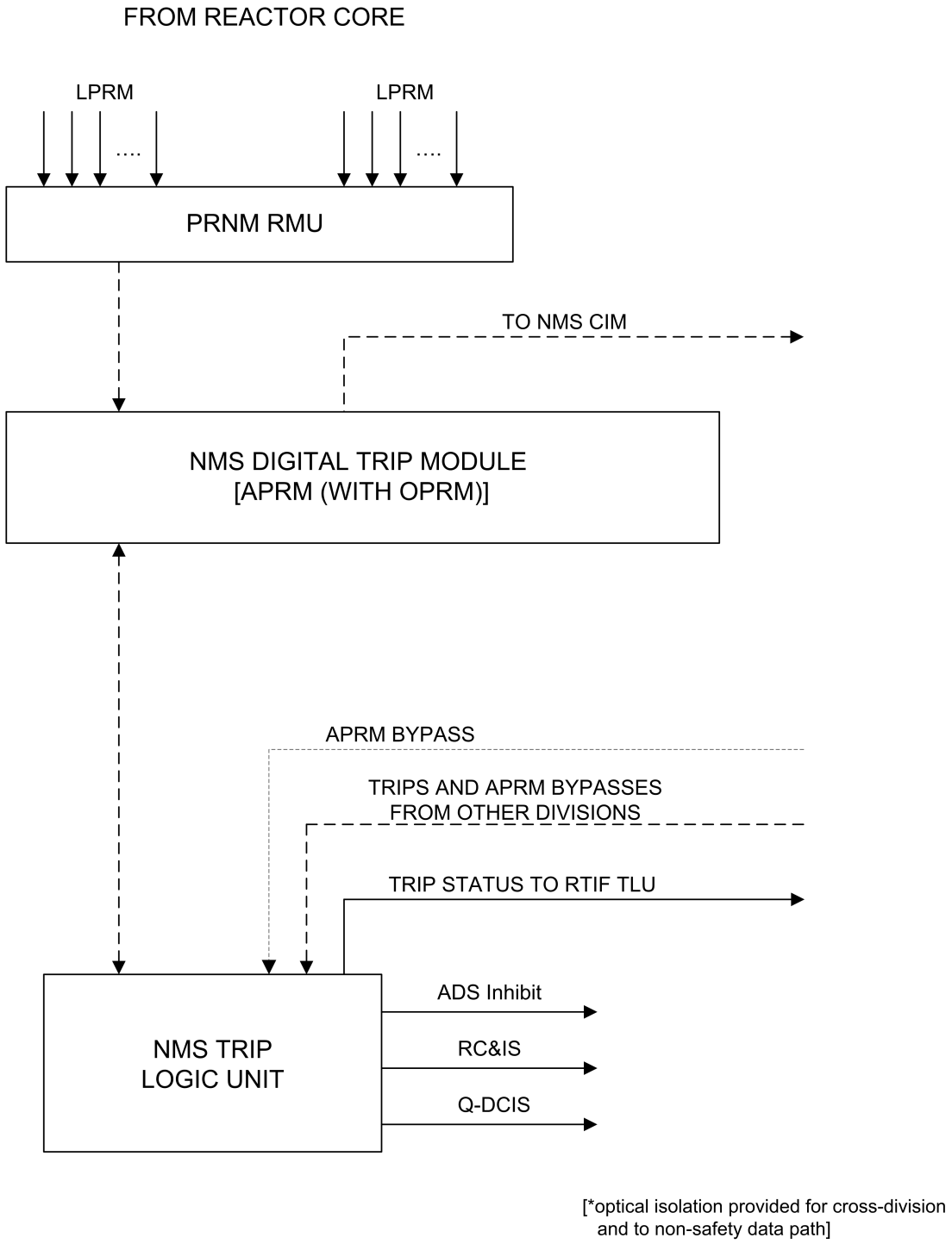

Figure 7.2-6 SRNM Detector Locations

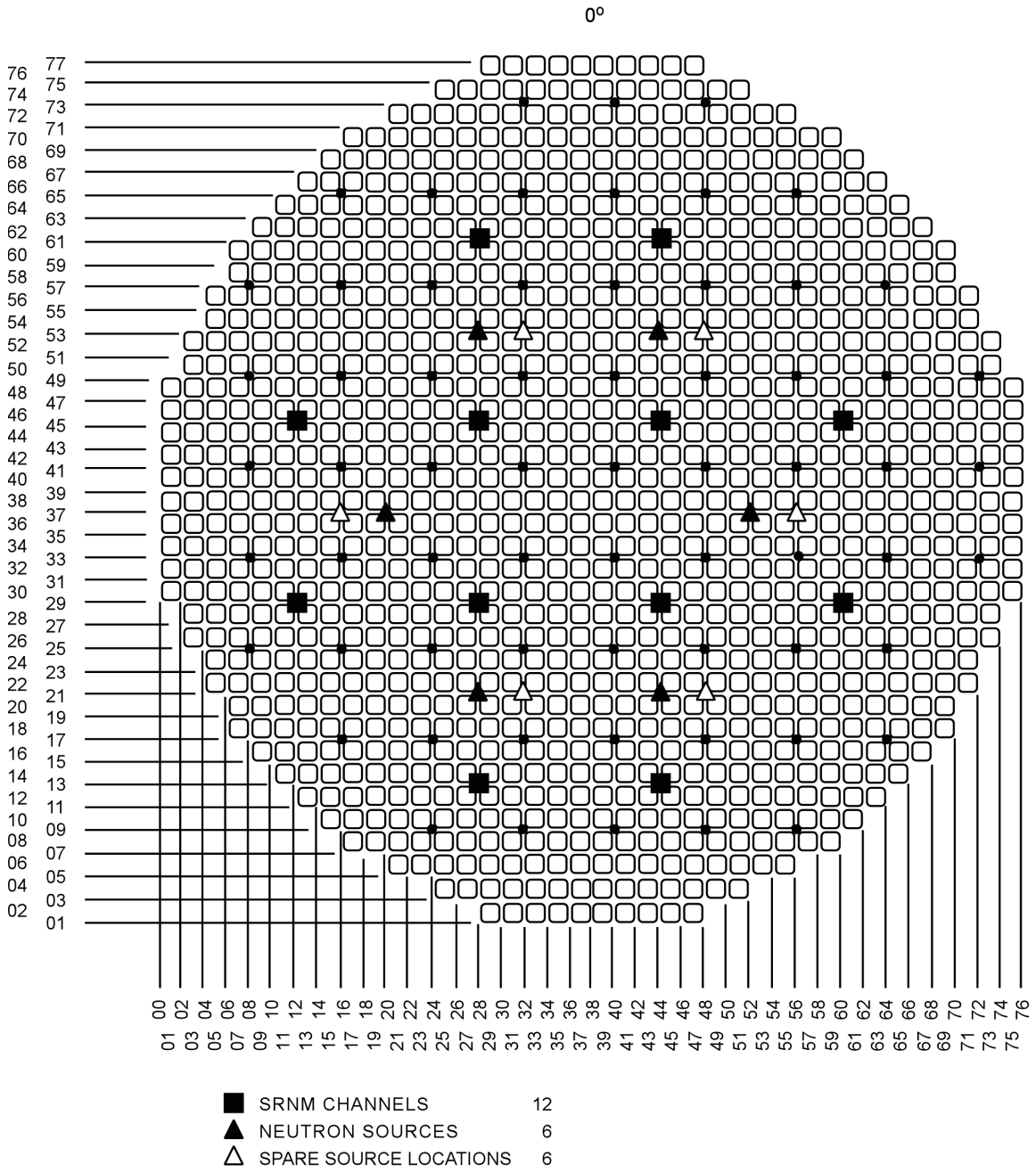

Figure 7.2-7 LPRM Locations in the Core

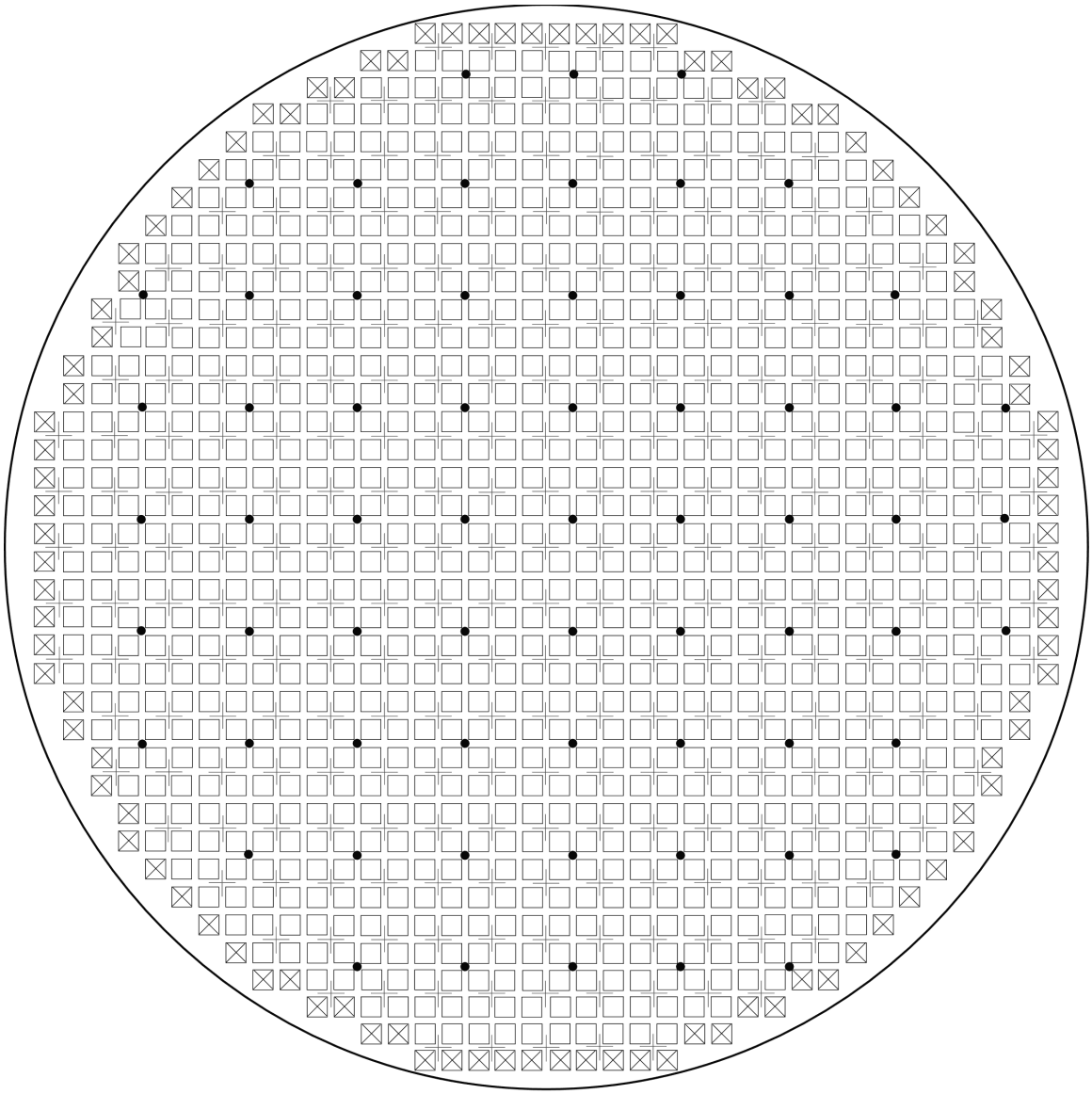

Central Region Bundle	1028	Control Rod	269
Peripheral Region Bundle	104	LPRM	64
Total	1132		

ESBWR Core Map

Figure 7.2-8 Axial Distribution of LPRM Detectors

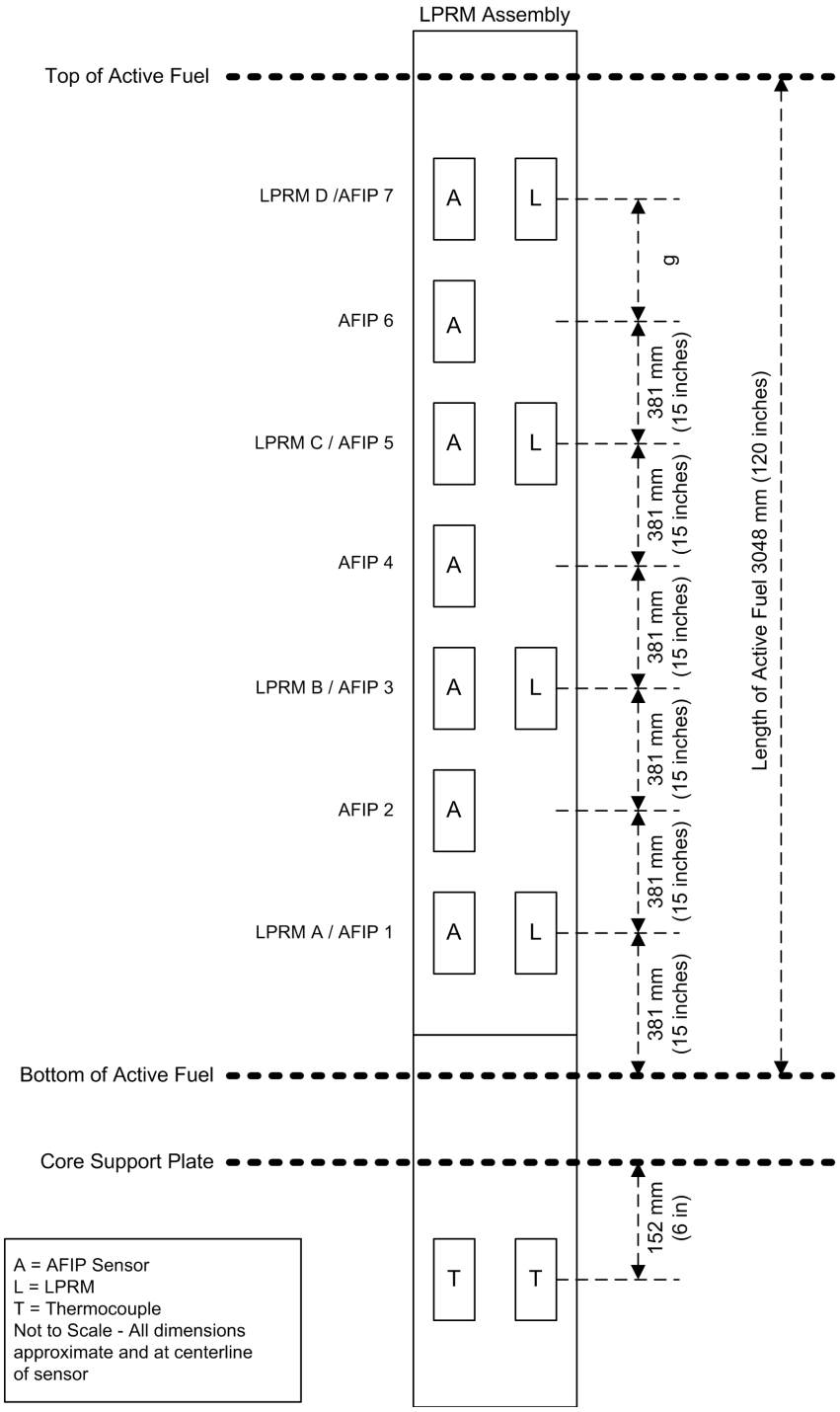

Figure 7.2-9 LPRM Assignments to APRM Channels

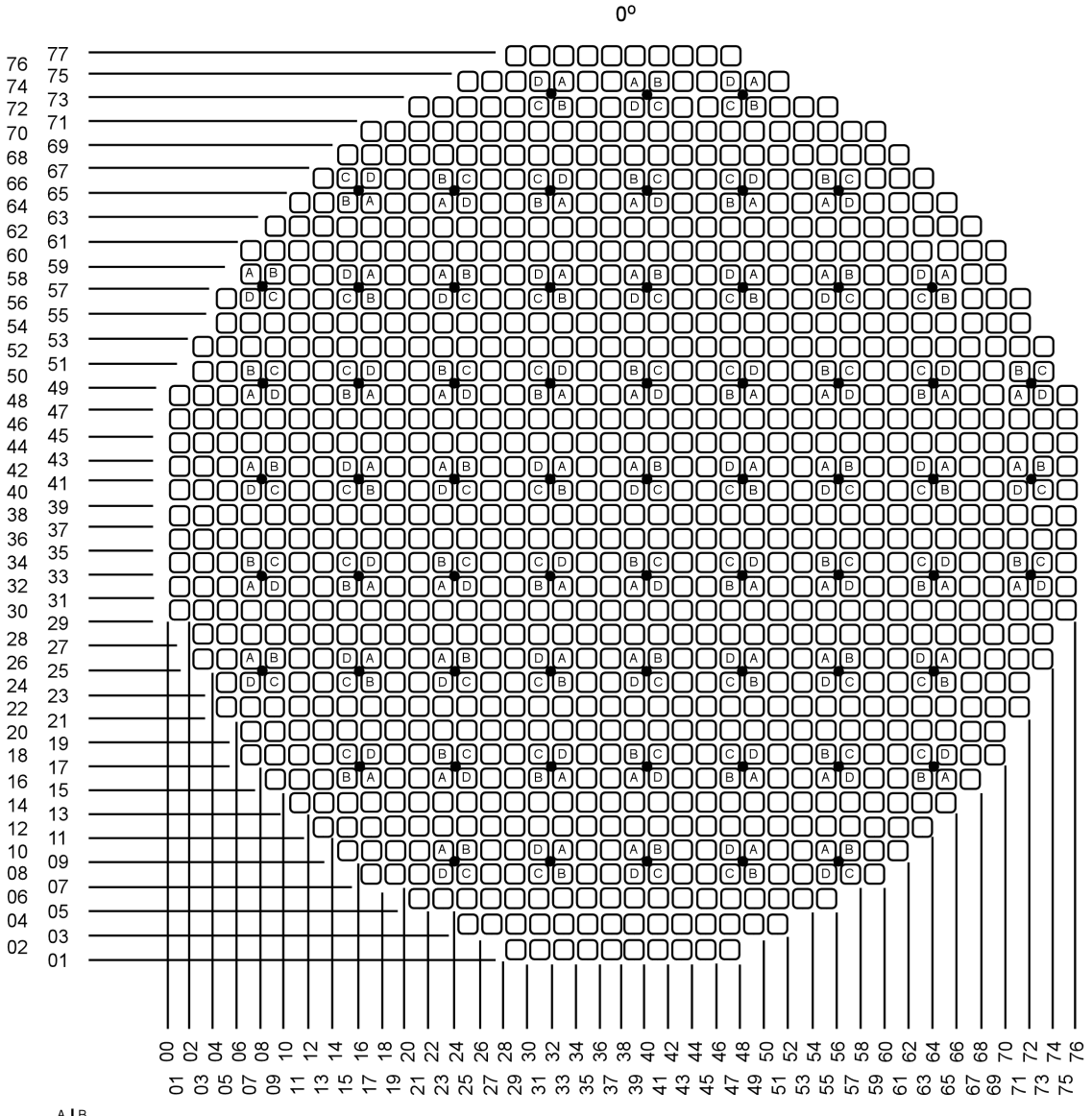

LPRM STRING PROVIDING INPUT FOR APRM CHANNEL A, B, C, AND D
UPPER LEFT LETTER = INPUT FOR APRM CHANNEL A
UPPER RIGHT LETTER = INPUT FOR APRM CHANNEL B
LOWER RIGHT LETTER = INPUT FOR APRM CHANNEL C
LOWER LEFT LETTER = INPUT FOR APRM CHANNEL D
(LETTERS SHOWN IN THE CORE MAP REFER TO LPRM DETECTORS A, B, C, D, PER ASSEMBLY)

Figure 7.2-10 LPRM Assignment to OPRM Channels

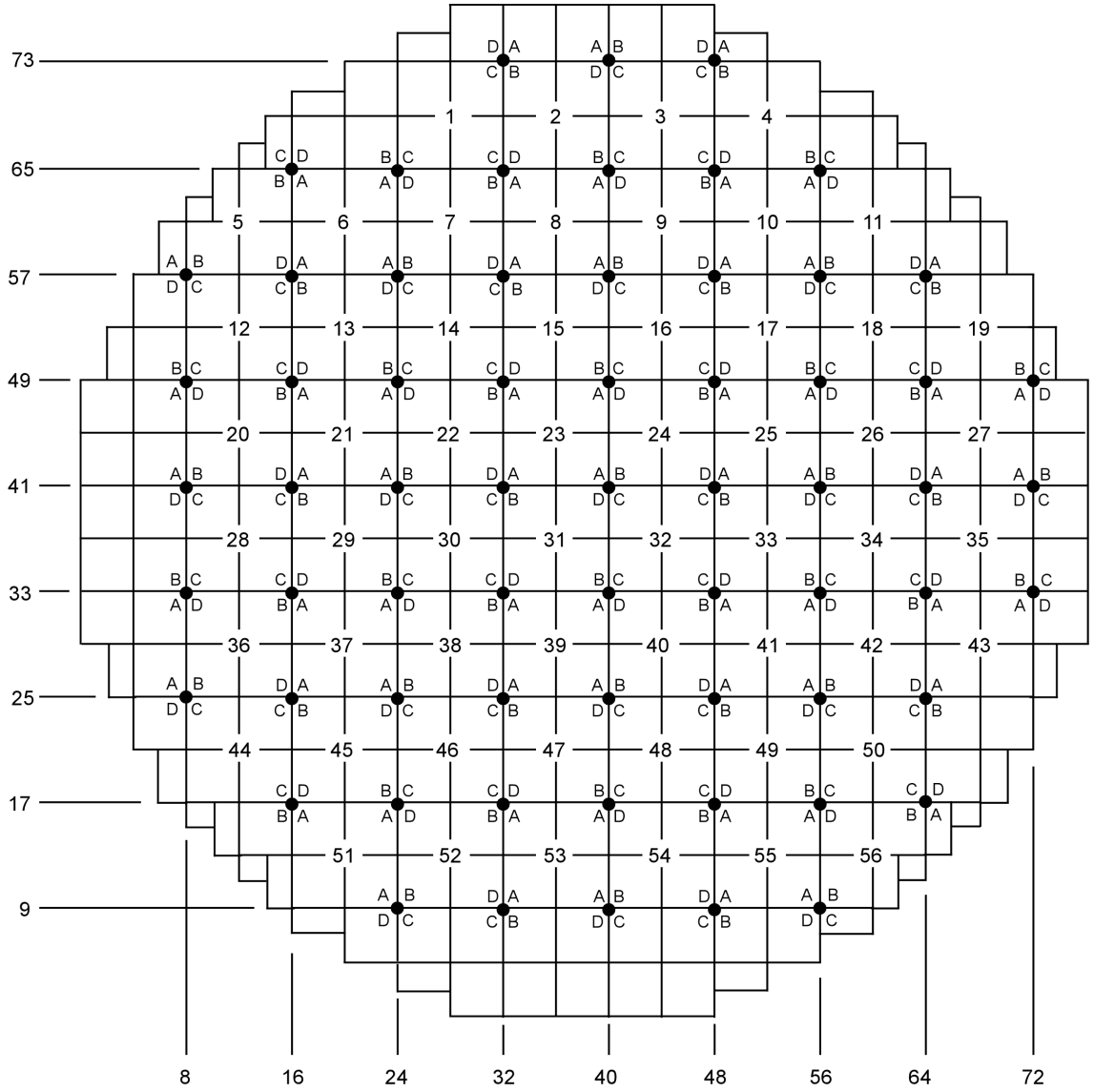

A B / D C LPRMs PROVIDING INPUT TO OPRM CHANNELS A, B, C, AND D

UPPER LEFT LETTER = INPUT FOR OPRM CHANNEL A
UPPER RIGHT LETTER = INPUT FOR OPRM CHANNEL B
LOWER RIGHT LETTER = INPUT FOR OPRM CHANNEL C
LOWER LEFT LETTER = INPUT FOR OPRM CHANNEL D
(LETTERS IN THE MAP REFER TO LPRM DETECTORS A, B, C, D PER ASSEMBLY)

Figure 7.2-11a Reactor Trip and Isolation Function (RTIF) Simplified Functional Block Diagram

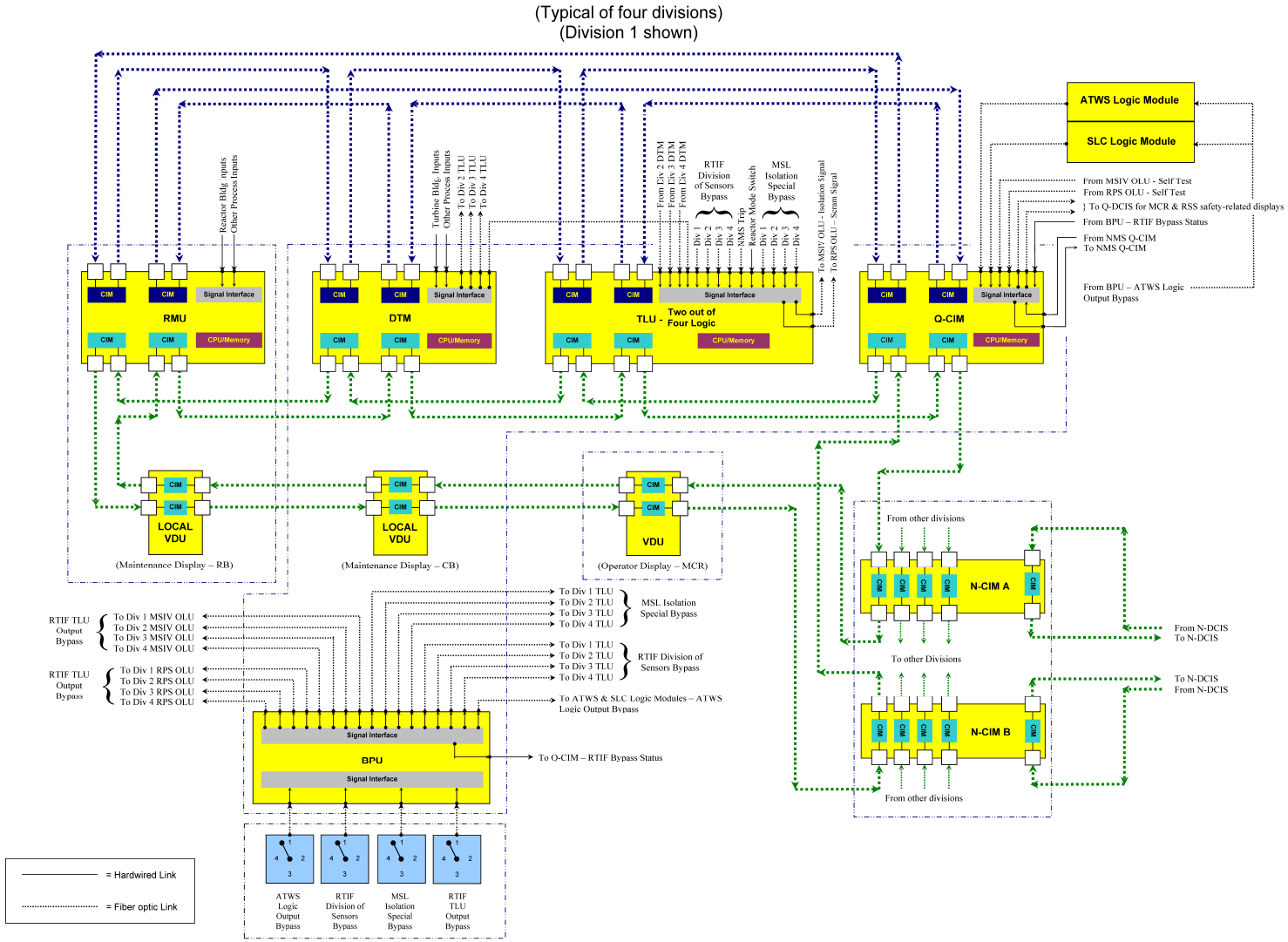

Figure 7.2-11b Reactor Trip and Isolation Function (RTIF) Simplified Functional Block Diagram — Output Logic Unit Detail

(Four Divisions Shown)

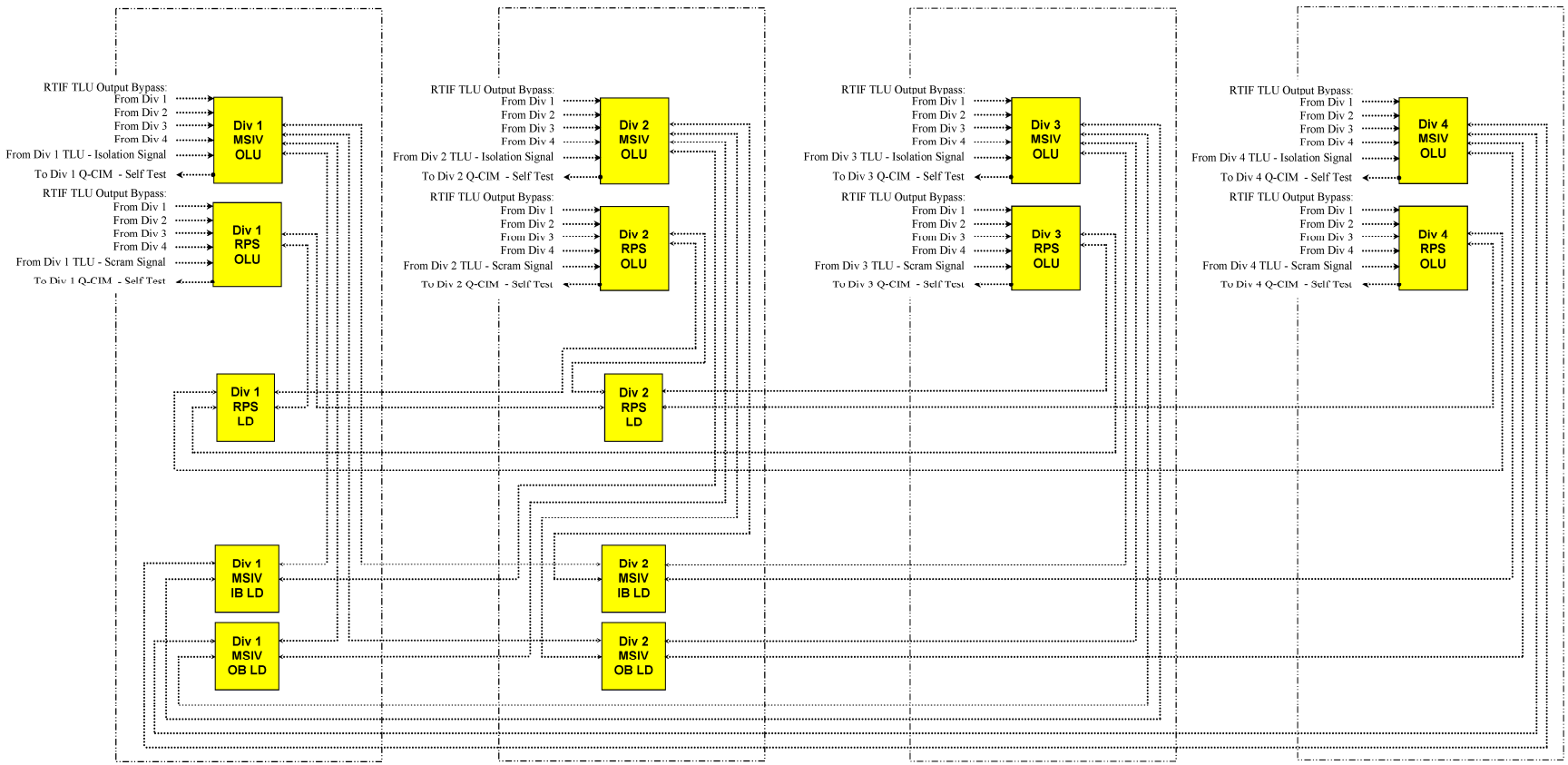

Figure 7.2-12 Neutron Monitoring System (NMS) Simplified Functional Block Diagram

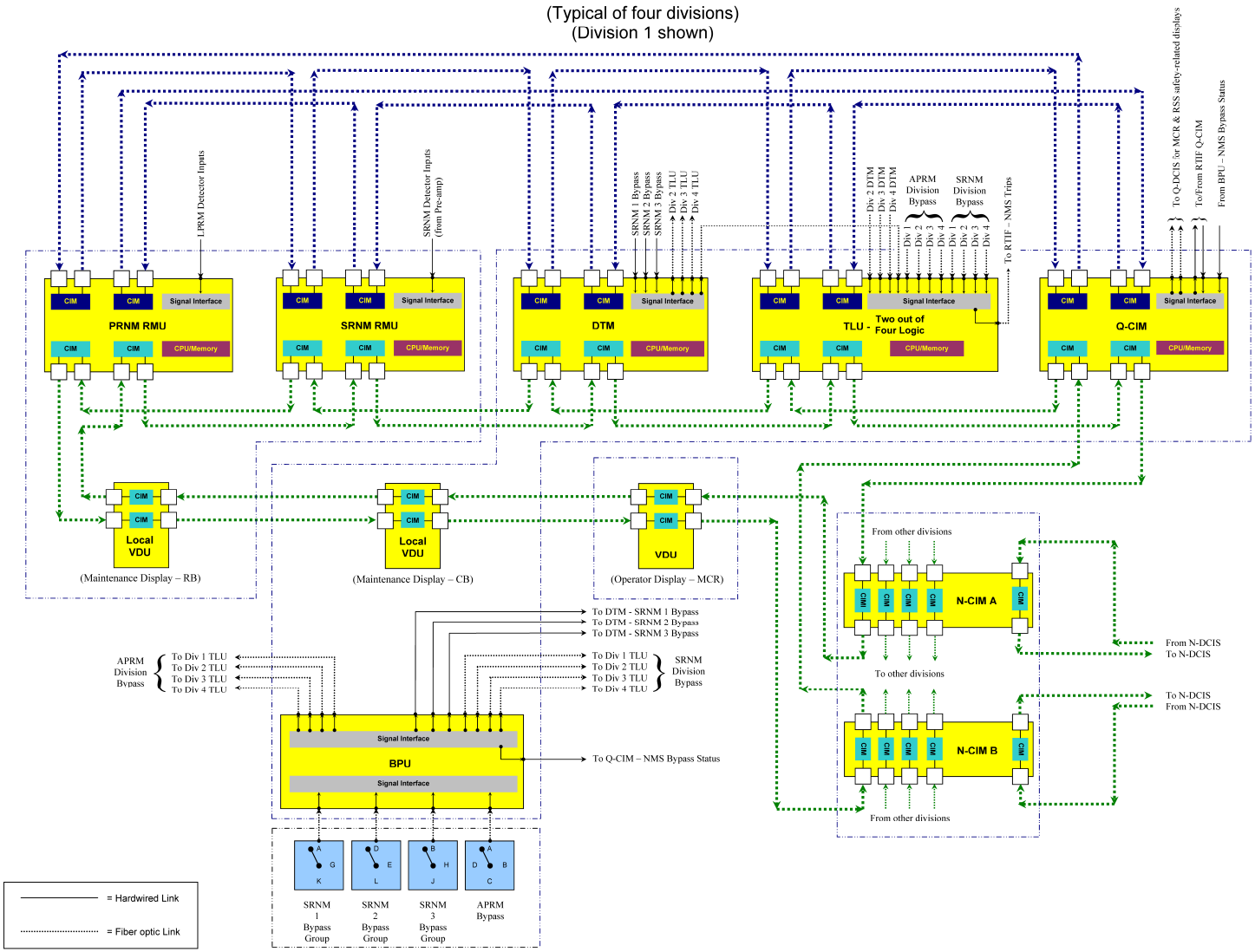

7.3 Engineered Safety Features Systems

The Engineered Safety Features (ESF) systems are part of a group of systems collectively called the Safety-Related Distributed Control and Information System (Q-DCIS). A simplified network functional diagram of the DCIS is included as Figure 7.1-1. This diagram indicates the relationships of the ESF systems with their safety-related peers and with nonsafety-related plant data systems collectively called the Nonsafety-Related Distributed Control and Information Systems (N-DCIS). Section 7.1 contains a description of these relationships.

7.3.1 Emergency Core Cooling System

The Emergency Core Cooling System (ECCS) comprises the Automatic Depressurization System (ADS), the Gravity-Driven Cooling System (GDCS), the Isolation Condenser System (ICS) (Subsection 7.4.4), and the Standby Liquid Control (SLC) System (Subsection 7.4.1).

7.3.1.1 Automatic Depressurization System

The ADS resides within the Nuclear Boiler System (NBS). It depressurizes the reactor so that the low-pressure GDCS can provide makeup coolant to the Reactor Pressure Vessel (RPV).

7.3.1.1.1 System Design Bases

The ADS instrumentation and controls (I&C) safety-related requirements are to:

- Detect reactor low water level, RPV Level 1 (see Subsection 7.7.1.2 and Figure 7.7-1 for more information on the definition of water levels).
- Automatically actuate the Safety Relief Valves (SRVs) and Depressurization Valves (DPVs) after RPV Level 1 is reached or drywell pressure high is detected.
- Actuate the SRVs and DPVs sequentially and in groups to achieve the required depressurization characteristics.
- Render no more than one valve inoperative for any single failure.
- Ensure physical and electrical separation and isolation between safety-related divisions and from nonsafety-related circuits and equipment.
- Indicate the status of SRV and DPV in the Main Control Room (MCR).

The ADS I&C meet the nonsafety-related requirements that:

- No single I&C failure inadvertently opens an SRV or a DPV
- ADS-parameter alarms are provided in the MCR

7.3.1.1.2 System Description

The ADS is a subsystem of the NBS and comprises 10 SRVs, eight DPVs, and the associated I&C. The SRVs are nitrogen operated solenoid actuated relief valves. The DPVs are electrically

operated squib valves. The SRVs and DPVs are divided into groups, and lift in sequence when required, and are described in detail in Subsection 5.2.2 and Subsection 6.3.2, respectively.

The NBS functional components (including the ADS) are shown on Figure 5.1-2. The mechanical aspects of the ADS functions within the ECCS are discussed in Subsection 6.3.3. Typical SRV and DPV logic and control are shown on Figures 7.3-1a and 7.3-1b, respectively.

Automatic Operation

Actuation of ADS equipment is controlled automatically, without need for operator action. Capability for manual actuation also is provided (IEEE Std. 603, Sections 6.2 and 7.2).

Automatic actuation of the ADS occurs when the RPV water reaches Level 1, which is detected by four wide range RPV water level sensors. ADS is also initiated on drywell pressure high (using four pressure sensors). These sensors are separate from those used for Reactor Protection System (RPS) functions and diverse from the Diverse Protection System (DPS) wide range level sensors.

When a sustained RPV Level 1 is detected for 10 seconds or sustained drywell pressure high is detected for 60 minutes, five SRVs (group 1) are opened to start RPV pressure reduction, followed by the remaining five SRVs (group 2) after a time delay. See Table 7.3-2 for the time delay parameters. The sequence continues with groups of DPVs, each opening after further successive time delays. See Table 7.3-3 for the DPV groups and time delay parameters. This sequential operation minimizes the water loss as a result of liquid swell in the RPV when its pressure is rapidly reduced. See Table 5.2-2 for the SRV and DPV settings or capacities.

Automatic initiation of ADS is inhibited by the ATWS/SLC system logic as described in Subsection 7.8.1.1.1.2. The ADS Inhibit signal inhibits the sequenced start logic for the SRV and DPV valves.

Additionally, as discussed in Subsection 7.8.1.2, the DPS has the ability to open independently the same SRVs and DPVs using the same logic, but using diverse hardware/software equipment and a diverse set of reactor-level and drywell pressure sensors For the ADS, the DPS can actuate a fourth, nonsafety-related solenoid on each of the SRVs, and a fourth squib initiator on each of the DPVs.

Manual Operation

The safety-related Video Display Units (VDUs) in the MCR provide a display format allowing the operator to manually open each SRV and each DPV independently, using the primary Safety System Logic and Control/ESF (SSLC/ESF) platform. Each nonsafety-related VDU in the MCR provides a display format allowing the operator to manually open each SRV independently, using the DPS logic function. Each display uses an "arm/fire" configuration requiring at least two deliberate operator actions. Operator use of the "arm" portion of the display triggers a plant alarm. The two manual opening schemes from SSLC/ESF and from DPS are diverse.

Each safety-related VDU provides a display with an "arm/fire" switch (one per division) to manually initiate ADS as a system, rather than initiating each valve individually (IEEE Std. 603, Sections 5.8, 6.2 and 7.2). If the operator uses any two of the four "arm/fire" switches, the ADS sequence seals in and starts the ADS valve opening sequence. This requires at least four (two arm and two fire) deliberate operator actions.

MCR controls are provided to manually inhibit the ADS under ATWS conditions (as described in Subsection 7.8.1.1.1.2).

Actuation Logic

See Figure 7.3-1a for typical SRV actuation logic, and Figure 7.3-1b for typical GDCS and DPV actuation logic.

The ADS actuation logic is implemented in four SSLC/ESF divisions, each of which can make a RPV Level 1 or drywell pressure high trip vote. Each of the divisional trip votes is shared with the other divisions. Normally, each of the four divisions makes a two-out-of-four trip decision from the four divisional votes; however, the entire SSLC/ESF system has a bypass control such that any single division of sensors can be removed from the two-out-of-four decision process, so that the remaining three divisions operate with a two-out-of-three trip decision. Only one division at a time can be bypassed, and used to facilitate either maintenance or calibration activities. Divisional bypasses are indicated in the MCR.

Each division of SSLC/ESF is configured such that all functions (like the DTM function or 2/4 voter function) are implemented in triply redundant controller application processors, to support the requirement that single divisional failures cannot result in inadvertently opening any ADS valve (SRV or DPV). (See Figures 7.3-1a, 7.3-1b.) The four divisional sensor signals and their trip setpoints are continuously monitored for consistency by the N-DCIS plant computer functions (technical specification monitor). An inconsistency results in an alarm. RPV level within each division is measured independently by three separate A/D converters in the RMU and sent by three redundant paths to the triply redundant controller application processors in the SSLC/ESF. The triply redundant logic in each division will issue an RPV Level 1 trip signal if the measured RPV water level drops below the Level 1 setpoint. Similarly the triply redundant measurements and logic will issue a Drywell Pressure High trip signal if measured drywell pressure exceeds the high drywell pressure setpoint.

The RPV Level 1 and Drywell Pressure High signal actuates the timers in the triply redundant controller application processors (see Tables 7.3-2 and 7.3-3). If the trip signal resets (as, for example, from an instrument column transient), the timer resets and restarts when the next trip signal is received. If the RPV Level 1 trip signal sustained for 10 seconds, the logic seals in and issues an RPV Level 1 signal. The RPV Level 1 signal is also used to start ECCS subsystems in sequence. The SSLC/ESF platform is described in Subsection 7.3.5. The RPV Level 1 signal specifically actuates five timers in the triply redundant ADS logic. If the drywell pressure high trip

signal sustained for 60 minutes, the logic seals in and issues a Drywell Pressure High signal. The Drywell Pressure High signal also actuates the five timers in the triply redundant logic. The Drywell Pressure High signal is also used to actuate GDCS injection valve timer operation as described in Subsection 7.3.1.2.

Divisional separation is maintained by using optical isolators and separate raceway, conduit, and penetration wiring to each SRV or DPV. Trip signals from any two divisions can open all of the ADS valves.

The actual firing circuit for the various squib initiators and SRV solenoids consists of two (solenoid) or three (squib initiator) load driver/discrete output circuits, followed by a continuity monitor and a disable/test switch all arranged in series, and located in two (per division) safety-related or DPS RMUs in the Reactor Building (RB); the two RMUs associated with the firing circuit are located in different fire areas. Because there is the division of sensors bypass and the logic is implemented in a triply redundant controller and multiple load drivers/discrete outputs are used, no additional division of trip logic bypass is implemented in the SSLC/ESF logic. It is undesirable to perform this level of bypass activity with the RMU electrically connected to the valve. The disable/test switch described below provides the bypass function required. In addition to the usual RMU self-diagnostics, means are provided to indicate that each of the series load driver/discrete output circuits can be "closed" (the circuits can be exercised one at a time from the MCR) and to indicate that both have closed.

The disable/test switch (Figure 7.3-1b) that disables the firing circuit affects one valve and does not interact with the other valves allocated to that RMU. Operation of any disable/test switch triggers an MCR alarm indicating that the firing circuit is out of service. Although the load driver/discrete output checks can be done on-line (one at a time) without causing valve operation, opening the firing circuit with the disable/test switch allows the continuity monitor to be tested, and allows on-line surveillance and maintenance activities to be done, with the assurance that a valve is not opened inadvertently. The operation of a disable/test switch in any one division does not disable the SRV or DPV because it maintains the ability to be opened by its other divisional solenoid/squib initiator. Additionally it is not possible to lose single failure inadvertent actuation protection by any operator or disable/test switch action.

The ADS design parameters shown in Table 7.3-1 ensure that no single failure of an ADS division logic, SRV actuation pilot, or DPV igniter circuit can prevent successful system operation as long as any three of the four divisions of safety-related power are available. This satisfies the single failure criterion.

Supporting systems for the ADS include the instrumentation, logic, control, and motive power sources. The instrumentation and logic power is supplied by the corresponding divisional safety-related power sources. The actual SRV solenoid and DPV squib initiator power also is supplied by the corresponding divisional safety-related or nonsafety-related load group power

sources (See Subsection 8.3.1.1.3). The motive power for the electrically operated pneumatic pilot solenoid valves on the SRVs is from accumulators located near the SRVs, and supplied with nitrogen by the High Pressure Nitrogen Supply System (HPNSS).

7.3.1.1.3 Safety Evaluation

Chapter 15 and Section 6.3 evaluate the individual and combined capabilities of the ECCS systems, including the ADS. For the entire range of reactor coolant system break sizes, the ECCS systems ensure that the reactor core is kept submerged.

SSLC/ESF initiating instrumentation, including the ADS, responds to the potential inadequacy of core cooling regardless of the location of the breach in the reactor coolant pressure boundary (RCPB). Detection of RPV low water level, which is completely independent of breach location, is used to initiate the ADS.

The redundancy of the control and monitoring equipment for the ADS is consistent with the redundancy of the four divisions of ADS.

No single failure in the ADS initiation circuitry can prevent the ADS from depressurizing the RPV, or cause an inadvertent actuation of the ADS. This satisfies the single failure criterion of IEEE Std. 603, Section 5.1.

The ADS has no equipment protective interlocks that could interrupt automatic system operation.

The ADS instrumentation and logic, and the SRV and DPV initiation circuitry is powered by divisionally separated safety-related power sources.

Table 7.1-1 identifies the ADS and the associated codes and standards applied, in accordance with the SRP. This subsection addresses I&C systems conformance to regulatory requirements, guidelines, and industry standards.

7.3.1.1.3.1 Code of Federal Regulations

10 CFR 50.34(f)(1)(v)[II.K.3.13], HPCI and RCIC initiation levels:

- Conformance: The ADS design conforms to these requirements.

10 CFR 50.34(f)(1)(x)[II.K.3.28], Automatic Depressurization System, associated equipment and instrumentation functioning:

- Conformance: The ADS design conforms to these requirements.

10 CFR 50.34(f)(2)(iii)[I.D.1], Human factors engineering principles applied to control room design:

- Conformance: The ADS design conforms to these requirements.

10 CFR 50.34 (f)(2)(v)[I.D.3], Bypass and operable automatic status indication of safety systems:

- Conformance: The ADS design complies with 10 CFR 50.34 (f) (2) (v) [I.D.3].

10 CFR 50.34(f)(2)(x)[II.D.1], Reactor coolant system relief and safety valves test program requirements:

- Conformance: The ADS design conforms to these requirements.

10 CFR 50.34(f)(2)(xi)[II.D.3], Reactor coolant system relief and safety valves position (open or closed) indication requirements:

- Conformance: The ADS design conforms to these requirements.

10 CFR 50.34(f)(2)(xviii)[II.F.2], Inadequate core cooling instrumentation and control room indication requirements:

- Conformance: The ADS design conforms to these requirements. NBS provides the reactor water level measurement (temperature compensated) inputs to ADS. The reactor water level instrumentation errors due to non-condensible gases in instrument reference legs are addressed in Subsection 7.7.1.2.2.

10 CFR 50.34(f)(2)(xix)[II.F.3], Post-core damage accident plant condition monitoring requirements:

- Conformance: The ADS design conforms to these requirements.

10 CFR 50.43(e), Innovative means of accomplishing safety functions:

- Conformance: When innovative means are used in the I&C design it complies with 10 CFR 50.43(e).

10 CFR 50.49, Environmental qualification of electric equipment important to safety for nuclear power plants:

- Conformance: The ADS conforms to these requirements. See Table 3.11-1 (Electrical and Mechanical Equipment for Environmental Qualification).

10 CFR 50.55a(a)(1), Quality standards for systems important to safety:

- Conformance: The ADS design conforms to this requirement for the use of the applicable standards.

10 CFR 50.55a(h), Protection and safety systems compliance with IEEE Std. 603:

- Conformance: The ADS design conforms to IEEE Std. 603. Conformance information is found in Subsections 7.1.6.6.1 through 7.1.6.6.1.27. Additional information concerning how the ADS design conforms to IEEE Std. 603 is discussed below.
    - IEEE Std. 603, Section 4.2 (Safety-related Functions): See Subsection 7.3.1.1.1.
    - IEEE Std. 603, Section 4.3 (Permissive Conditions for Operating Bypasses): Permissive conditions for operating bypasses See Subsection 7.3.1.1.2.
    - IEEE Std. 603, Section 4.6 (Spatially Dependent Variables): Spatial dependency of monitored variables is not applicable to ADS.

- IEEE Std. 603, Section 5.2 (Completion of Protective Actions): See Subsection 7.3.1.1.2.
- IEEE Std. 603, Section 5.7 (Capability for Test and Calibration): See Subsection 7.3.1.1.2.
- IEEE Std. 603, Sections 6.2 and 7.2 (Manual Control): See Subsection 7.3.1.1.2.
- IEEE Std. 603, Section 6.4 (Derivation of System Inputs): Derivation of System Inputs for the DPS are not applicable beyond that discussed in Subsection 7.1.6.6.1.20.
- IEEE Std. 603, Section 6.5 (Capability of Test and Calibration): See Subsection 7.3.1.1.2.
- IEEE Std. 603, Sections 6.6 and 7.4 (Operating Bypasses): See Subsection 7.3.1.1.2.
- IEEE Std. 603, Sections 6.7 and 7.5 (Maintenance Bypasses): See Subsection 7.3.1.1.2.
- IEEE Std. 603, Section 8.2 (Non-Electrical Power Sources): Non-Electrical power sources for the DPS are not applicable beyond that discussed in Subsection 7.1.6.6.1.26.
- IEEE Std. 603, Section 8.3 (Maintenance Bypasses): Maintenance bypasses for the DPS are not applicable beyond that discussed in Subsection 7.1.6.6.1.27.

10 CFR 52.47, Contents of applications; technical information, level of design information:

- Conformance: The level of detail provided for the ADS within the DCD conforms to this requirement.

10 CFR 52.47(a)(21), Resolution of unresolved and generic (medium- and high-priority) safety issues identified in NUREG-0933:

- Conformance: Resolution of unresolved and generic safety issues is discussed in Section 1.11.

10 CFR 52.47(a)(25), Interface requirements for portions of the plant not within scope of certified design application:

- Conformance: There are no interface requirements for this section.

10 CFR 52.47(b)(1), ITAAC in design certification application:

- Conformance: ITAAC are provided for I&C systems and equipment in Tier 1.

10 CFR 52.47(c)(2), Innovative means to accomplish safety function design completeness requirements per 10 CFR 50.43(e):

- Conformance: The I&C design may use innovative means for accomplishing safety functions.

7.3.1.1.3.2 General Design Criteria

GDC 1, 2, 4, 13, 15, 19, 20, 21, 22, 23, 24, 29, 30, 33, 35, and 37:

- Conformance: The ADS design complies with these GDCs.

7.3.1.1.3.3 Staff Requirements Memoranda

SRM on Item II.Q of SECY 93-087:

- Conformance: Implementation of a diverse I&C system (DPS) conforms to these criteria as described in Section 7.8.

7.3.1.1.3.4 Regulatory Guides

RG 1.22, Periodic Testing of Protection System Actuation Functions:

- Conformance: Components are tested periodically during refueling outages every two years. The ADS design conforms to RG 1.22 with the clarification that for the DPVs, periodic testing is interpreted to mean testing of the squib initiators in a laboratory after removal from the squib valves.

Because the DPVs are squib-actuated and cannot be closed once they are opened, there is no practicable system design to allow testing during reactor operation without creating an unacceptable breach of the RCPB. The SRVs are tested with the reactor at low power and at, or near, rated pressure. Both the squib wires and the SRV solenoids are continuously monitored for electrical continuity, as indicated in Subsection 7.3.1.1.4.

RG 1.47, Bypassed and Inoperable Status Indication for Nuclear Power Plant Safety Systems:

- Conformance: The ADS design conforms to RG 1.47. Automatic indication is provided in the MCR to inform the operator that the system is inoperable or a division is bypassed.

RG 1.53, Application of the Single Failure Criterion to Safety Systems:

- Conformance: The ADS is organized into four physically and electrically-isolated divisions that use the principles of independence and redundancy to conform to the single failure criterion as defined by IEEE Std. 379, Section 4, and IEEE Std. 603, Section 5.1; additionally, the design meets N-2 conditions. Analyses complying with IEEE Std. 379 will be used to confirm the safety-related system designs' conformance to the single failure criterion.

RG 1.62, Manual Initiation of Protective Actions:

- Conformance: The ADS design conforms to RG 1.62. Manual actuation of ADS requires the operator to actuate at least two dual action switches. This ensures that manual initiation of the ADS is a premeditated act.

RG 1.75, Criteria for Independence of Electrical Safety Systems:

- Conformance: The ADS design conforms to RG 1.75 as described in Subsections 8.3.1.3 and 8.3.1.4.

RG 1.89, Environmental Qualification of Certain Electric Equipment Important to Safety for Nuclear Power Plants:

- Conformance: The ADS design conforms to RG 1.89. See Table 3.11-1 (Electrical and Mechanical Equipment for Environmental Qualification).

RG 1.97, Criteria for Accident Monitoring Instrumentation for Nuclear Power Plants:

- Conformance: The ESBWR I&C conforms to RG 1.97. Specific instruments credited for RG 1.97 compliance are determined as part of the HFE development process as discussed in Section 7.5.

RG 1.100, Seismic Qualification of Electric and Mechanical Equipment for Nuclear Power Plants:

- Conformance: The ADS design conforms to RG 1.100. See Sections 3.9 (Mechanical Systems and Components) and 3.10 (Seismic and Dynamic Qualification of Mechanical and Electrical Equipment).

RG 1.105, Setpoints for Safety-Related Instrumentation:

- Conformance: The setpoints used to initiate the ADS are consistent with RG 1.105. Because the discrete setpoints in the ADS logic do not drift, most of the variation is expected to be in the process sensors. Setpoints are continuously monitored and indicated by the PCF. Reference 7.3-2 provides a detailed description of the GEH setpoint methodology.

RG 1.118, Periodic Testing of Electric Power and Protection Systems:

- Conformance: Periodic testing of the protection systems is performed in accordance with IEEE Std. 338, as modified by RG 1.118. A full functional test of the ADS is not practical, because a LOCA results if the non-reclosable DPVs are opened. Acceptable reliability of equipment operation is demonstrated by alternate test methods. System logic is periodically self-tested, and initiating circuits are continuously monitored. DPV valve initiators periodically are removed and test-fired in a laboratory. RPV water level sensors are located outside containment, so calibration verification can be performed during plant operation.

RG 1.151, Instrument Sensing Lines:

- Conformance: NBS provides the measurement inputs to ADS. The NBS instrument sensing lines conform to the guidelines of RG 1.151 and ISA-67.02.01. Flow restrictors are provided inside containment on instrument lines connected to the RCPB. Manual isolation valves and self-actuating excess flow check valves are provided outside the drywell. The mechanical design guidelines as defined by ISA-67.02.01 and RG 1.151 are met as applicable for each installation.

RG 1.152, Criteria for Use of Computers in Safety Systems of Nuclear Power Plants:

- Conformance: The ADS design conforms to RG 1.152.

RG 1.153, Criteria for Safety Systems:

- Conformance: The ADS is designed to satisfy the requirements of IEEE Std. 603, as endorsed by RG 1.153.

RG 1.168, Verification, Validation, Reviews, and Audits for Digital Computer Software Used in Safety Systems of Nuclear Power Plants:

- Conformance: The ADS design conforms to RG 1.168 as implemented on the SSLC/ESF platform.

RG 1.169, Configuration Management Plans for Digital Computer Software Used in Safety Systems of Nuclear Power Plants:

- Conformance: The ADS design conforms to RG 1.169 as implemented on the SSLC/ESF platform.

RG 1.170, Software Test Documentation for Digital Computer Software Used in Safety Systems of Nuclear Power Plants:

- Conformance: The ADS design conforms to RG 1.170 as implemented on the SSLC/ESF platform.

RG 1.171, Software Unit Testing for Digital Computer Software Used in Safety Systems of Nuclear Power Plants:

- Conformance: The ADS design conforms to RG 1.171 as implemented on the SSLC/ESF platform.

RG 1.172, Software Requirements Specifications for Digital Computer Software Used in Safety Systems of Nuclear Power Plants:

- Conformance: The ADS design conforms to RG 1.172 as implemented on the SSLC/ESF platform.

RG 1.173, Developing Software Life Cycle Processes for Digital Computer Software Used in Safety Systems of Nuclear Power Plants:

- Conformance: The ADS design conforms to RG 1.173 as implemented on the SSLC/ESF platform.

RG 1.180, Guidelines for Evaluating Electromagnetic and Radio-Frequency Interference in Safety-Related Instrumentation and Control Systems:

- Conformance: The ADS design conforms to RG 1.180. See Table 3.11-1 (Electrical and Mechanical Equipment for Environmental Qualification).

RG 1.204, Guidelines for Lightning Protection of Nuclear Power Plants:

- Conformance: The ADS design conforms to RG 1.204.

RG 1.209, Guidelines for Environmental Qualification of Safety-Related Computer-Based Instrumentation and Control Systems in Nuclear Power Plants:

- Conformance: The ADS design conforms to RG 1.209. See Table 3.11-1 (Electrical and Mechanical Equipment for Environmental Qualification).

7.3.1.1.3.5 Branch Technical Positions

BTP HICB-8, Guidance for Application of Regulatory Guide 1.22:

- Conformance: BTP HICB-8 calls for the identification of the actuated equipment not tested during reactor operation, and for a discussion of how each conforms to the justification criteria of Paragraph D.4 of RG 1.22. The ADS design conforms to RG 1.22 with the clarification that for the DPVs, periodic testing is interpreted to mean testing of the squib initiators in a laboratory after removal from the squib valves.
- Because the DPVs are squib-actuated and cannot be closed once they are opened, there is no practicable system design to allow testing during reactor operation without creating an unacceptable breach of the RCPB. The SRVs are tested with the reactor at low power and at, or near, rated pressure. Both the squib wires and the SRV solenoids are continuously monitored for electrical continuity, as indicated in Subsection 7.3.1.1.4.

The SRVs and DPV initiators can be tested when the reactor is shut down.

BTP HICB-10, Guidance on Application of Regulatory Guide 1.97:

- Conformance: The ESBWR I&C conforms to RG 1.97. Specific instruments credited for RG 1.97 compliance are determined as part of the HFE development process as discussed in Section 7.5.

BTP HICB-11, Guidance on Application and Qualification of Isolation Devices:

- Conformance: The ADS design conforms to BTP HICB-11.

ADS logic is controlled by the SSLC/ESF system. SSLC/ESF logic controllers for the ADS use safety-related fiber-optic CIMs and fiber-optic cables for interconnections between safety-related divisions for data exchange and for interconnections between safety-related and nonsafety-related devices. The Q-DCIS provides the communication functions for SSLC/ESF. See Subsections 7.1.2, 7.1.3.2 and 7.1.3.3 for a description of the Q-DCIS communication system design.

BTP HICB-12, Guidance on Establishing and Maintaining Instrument Setpoints:

- Conformance: The ADS design conforms to BTP HICB-12. See Reference 7.3-2.

BTP HICB-14, Guidance on Software Reviews for Digital Computer-Based Instrumentation and Control Systems:

- Conformance: The ADS design conforms to BTP HICB-14.

BTP HICB-16, Guidance on the Level of Detail Required for Design Certification Applications Under 10 CFR Part 52:

- Conformance: The level of detail provided for the ADS within the DCD conforms to BTP HICB-16.

BTP HICB-17, Guidance on Self-Test and Surveillance Test Provisions:

- Conformance: The ADS design conforms to BTP HICB-17.

BTP HICB-19, Guidance for Evaluation of Defense-in-Depth and Diversity in Digital Computer-Based Instrumentation and Control Systems:

- Conformance: The ADS design conforms to BTP HICB-19. The implementation of an additional diverse instrumentation and control system is described in Section 7.8.

BTP HICB-21, Guidance on Digital Computer Real-Time Performance:

- Conformance: The ADS design conforms to BTP HICB-21.

7.3.1.1.3.6 Three Mile Island Action Plan Requirements

In accordance with the SRP for 7.3 and with Table 7.1-1, 10 CFR 50.34(f)(2)(v)[I.D.3] applies to the ADS. The ADS complies with the requirements as indicated above. TMI action plan requirements are addressed in Appendix 1A.

7.3.1.1.4 Testing and Inspection Requirements

The ADS voter logic units (VLU function) continuously self-tests. A very low current is used to test the continuity of the SRV pilot solenoids and the bridge wires within the DPV squib valve actuating circuitry. The test current is continuously applied, and triggers an alarm if the circuit is interrupted. Testing of ADS equipment is conducted during refueling outages. Refer to Subsection 5.2.2.4 (for SRVs) and Subsection 5.4.13.4 (for DPVs) for discussions of mechanical tests performed on the ADS. The same continuity test also is applied to the Gravity-Driven Cooling System (GDCS) squib valves described in Subsection 7.3.1.2.

7.3.1.1.5 Instrumentation and Control Requirements

System status during normal plant operation and ADS performance monitoring in an accident relies on the following MCR indications (additional discussion on the ADS instrumentation is contained in Subsection 7.3.1.1.2):

- Status indication of the SRVs and DPVs
- SRV discharge line temperature alarm

- RPV pressure indication
- Suppression pool high/low level alarm
- GDCS pool low level alarm
- Water level indication for the GDCS pools, suppression pool, and RPV
- Alarms for the following ADS parameters in the MCR:
    - Manual arming of ADS.
    - Manual actuation of ADS.
    - Two-out-of-four ADS Level 1 signals.
    - Automatic ADS initiation.
    - Aborted ADS initiation.
    - SRV solenoid loss of continuity.
    - DPV squib firing circuit loss of continuity.
    - Inconsistent wide range divisional RPV water level alarms.
    - Any inconsistency in divisional input information from the four SSLC/ESF platform divisions to each Voter Logic Unit (VLU), as compared at the VLU.
    - Any single load driver/discrete output trip in the firing circuit of a DPV or SRV.
    - Two-out-of-four ADS Drywell Pressure High signals.
    - Divisional RPV Level 1 trip.
    - Divisional Drywell Pressure High trip.

Safety-related ADS instrumentation located in the drywell is designed to operate in the environment resulting from a Loss of Coolant Accident (LOCA). Safety-related instruments located outside the containment also are qualified for the environment in which they must perform their safety function.

7.3.1.2 Gravity-Driven Cooling System

The basic components of the GDCS are within the containment. The GDCS pools, piping and valves are in the drywell. The suppression pool is on the outer periphery of the drywell within the containment envelope.

7.3.1.2.1 System Design Bases

The GDCS I&C are designed to meet the following safety-related requirements and 10 CFR 50.2, Design Bases:

- Automatically initiate the GDCS to prevent fuel-cladding temperatures from reaching the limits of 10 CFR 50.46.

- Respond to a need for emergency core cooling following reactor depressurization, regardless of the physical location of the malfunction or break causing the need.
- Be completely automatic in operation. Manual initiation of GDCS is possible at any time, provided protective interlocks have been satisfied.
- Prevent the inadvertent actuation of the deluge valves thus preventing inadvertent draining of the GDCS pools.
- Prevent any single control logic and instrumentation failure from inadvertently opening a GDCS injection valve or equalizing valve.
- Display GDCS valve positions and GDCS pool levels on the mimic on the WDP in the MCR.

7.3.1.2.2 System Description

The GDCS system comprises the GDCS injection and equalization functions as well as the deluge subsystem. The injection and equalization functions are used to cool the core in the event of a LOCA. The deluge system is used to flood the containment floor in the event of a core breach.

The GDCS injection and equalization functions are implemented by four injection lines from the three GDCS pools to the RPV and four equalization lines from the suppression pool to the RPV. There are two valves on each injection line, with four squib initiators per valve (three divisional initiators and one from the DPS [see Section 7.8]), for a total of eight GDCS injection valves and 32 squib initiators. There is one squib valve on each of the four equalizing lines and four squib initiators per valve (three divisional initiators and one from the DPS [see Section 7.8]), for a total of four equalizing valves and 16 squib initiators. The equalizing valves are used after reactor core decay heat has boiled away sufficient vessel inventory added by the GDCS to again begin lowering the RPV water level. With three divisional initiators per valve, the system can be without two divisions of power and still perform its intended function.

The GDCS pools are located within the drywell at an elevation above the top of active fuel (TAF) and provide core cooling water by the force of gravity. The suppression pool is located within the drywell, with its equalization lines located above the TAF.

Safety-related and nonsafety-related sensors continuously monitor the GDCS pool water level. These values are continuously shown on the safety-related and nonsafety-related displays. Both high and low pool levels result in alarms from the PCF (part of N-DCIS).

The overall design of the system assures that, when needed, all eight injection valves and all four equalizing valves are fired - even with a complete failure of any two divisions. However, no squib is fired inadvertently as a result of any single failure.

Automatic Operation

Actuation of the GDCS injection function is performed automatically, without need for operator action. The signal to open the GDCS injection valves is given after a time delay (Table 7.3-4) When

the RPV water level drops below Level 1 sustained for 10 seconds, the GDCS time delay is initiated. For certain LOCA events where RPV water level does not drop below Level 1, GDCS injection valve time delay is also initiated on drywell pressure high signal, sustained for 60-minutes. With three divisional initiators per valve, the system can tolerate the complete loss of two divisions of power (one in bypass and one failure) and still perform its intended function.

Actuation of the GDCS equalizing function is performed automatically, without need for operator action. The GDCS equalizing valves initiation occurs automatically following a sustained RPV Level 1 signal, for 10 seconds, plus Table 7.3-4 time delay, and only after the RPV water level decreases below RPV Level 0.5 (1m above TAF). This action results in the actuation of the four equalizing squib valves mounted on the suppression pool equalizing lines. With three divisional initiators per valve, the system can tolerate the complete loss of two divisions (one bypass and one failure) of power and still perform its intended function.

GDCS injection and equalize subsystem initiation is inhibited automatically under ATWS conditions as described in Subsection 7.8.1.1.1.2.

Manual Operation

Each safety-related VDU provides a display with an "arm/fire" switch (one per division, for a total of four) to manually initiate the GDCS sequence as a system. If the operator uses any two of the four switches, the GDCS sequence seals in and starts the GDCS valve sequencing. This manual actuation also is interlocked with RPV pressure. This requires four deliberate (two-arm and two-fire) operator actions. For all of the manual initiations, operator use of the "arm" portion of the display triggers a plant alarm.

The safety-related VDUs in the MCR provide a display format allowing the operator to manually open each GDCS injection valve independently, using the primary SSLC/ESF logic function. Likewise, each nonsafety-related VDU in the MCR provides a display format allowing the operator to individually open each GDCS injection valve independently, using the DPS logic function. Each display uses an "arm/fire" configuration (interlocked with a low reactor pressure signal) requiring at least two deliberate operator actions. Operator use of the "arm" portion of the display triggers a plant alarm. The two manual opening schemes from the SSLC/ESF (primary) and the DPS (backup) are diverse.

In addition the safety-related VDUs in the MCR provide a display format allowing the operator manually to open each GDCS equalizing valve independently, using the primary SSLC/ESF logic function. Likewise, each nonsafety-related VDU in the MCR provides a display format allowing the operator to individually open each GDCS equalizing valve independently, using the DPS logic function. Each display uses an "arm/fire" configuration requiring at least two deliberate operator actions (interlocked with a low reactor pressure signal). Operator use of the "arm" portion of the display triggers a plant alarm. The two manual opening schemes from the SSLC/ESF (primary) and the DPS (backup) are diverse.

Actuation Logic

The logic elements providing controls for the actuation of the GDCS injection and equalizing squib valves are contained in the SSLC/ESF platform within Q-DCIS, outside the drywell containment. The RPV water level sensors and the drywell pressure sensors used to initiate GDCS, are located on racks outside the drywell.

The GDCS injection and equalizing valve logic includes the SSLC/ESF "division of sensors" bypass switch, two-out-of-four trip decisions, and single failure proof actuation logic - with any three of the four divisions of safety-related power available. The valve logic also is single failure proof against inadvertent actuation, meaning each division of logic has three load drivers each of which must operate for the associated squib valves to fire.

The wide range level and drywell pressure sensors that are used for the ADS logic and fuel zone range RPV water level sensors are also used for the GDCS equalizing valve logic; these are separate and independent from the sensors used for RPS functions and diverse from those used by the DPS. Both sets of RPV water level sensors belong to the NBS.

The generation of the RPV-Level 1 or Drywell Pressure High signal for the GDCS is described above (Automatic Operation). The logic for all squib initiators is similar. The signals are acquired per division by RMUs of the same division. The data are sent via fiber-optic cables to the SSLC/ESF cabinets located in the corresponding divisional I&C equipment rooms in the Control Building (CB). Each division's logic compares the measured parameters to setpoints. If the measured parameter is at or past the setpoint, a divisional sensor trip is generated and sent both to its own division and to each of the other divisions by appropriately isolated fiber-optic cables.

Each division has access to all four divisional sensor trip signals, and performs a redundant two-out-of-four vote on the four sensor trip signals. (The vote is two-out-of-three if one division is bypassed, because no more than one division can be bypassed at any one time.)

Each division uses triply redundant logic to perform the two-out-of-four vote on the four divisional sensor trip signals. The effect is that any two divisions sensing the appropriate trip conditions results in all divisions providing a trip signal.

The existence of the multiple logic trips per division is necessitated by the requirement that no injection or equalizing squib valve inadvertently be fired as the result of a single failure.

For the eight GDCS injection squib valves logic, when a sustained RPV Level 1 is detected for 10 seconds or a sustained Drywell Pressure High is detected for 60 minutes, adjustable timers will be activated at a preset time delay (as specified in Table 7.3-4). After the time delay, a trip signal is output to the GDCS squib load drivers/discrete outputs. There are eight injection squib valves, each with three divisional squib initiators, and one DPS squib initiator.

Within the RMU, for each equalizing valve squib initiator, there is a series circuit of divisional power, three load drivers/discrete outputs in series, a current monitor, and a normally closed disable/test

switch. The SSLC/ESF triply redundant controller application processors must transmit separate close signals to each of the three load driver/discrete outputs. The effect is that two of the three triply redundant controller application processors must separately command all of the load drivers/discrete outputs to fire the divisional squib initiator, making the design single failure proof against inadvertent actuation. Because each GDCS injection squib valve has three squib initiators, powered by three different divisions, the design is also single failure proof if required to operate all eight valves, and even will initiate with the loss of two divisions of power.

The current monitor continuously verifies squib electrical continuity, and the disable/test switch is used when performing maintenance or surveillance testing, or testing the current monitor. If the disable/test switch opens the circuit, an alarm signal is sent to the MCR, indicating that the squib initiator (not the valve) is inoperable.

For diversity, the DPS also is able to fire its squib electrical initiator on each of the eight GDCS injection squib valves, using single failure proof logic (both to operate and to avoid inadvertent operation). This is accomplished using a completely separate squib initiator connected to the DPS system (see Figures 7.3-1b and 7.3-1c). The DPS system uses diverse (from the SSLC/ESF) sensors, hardware, and software to operate the GDCS injection valves. Figure 7.3-2 shows the initiation logic of a typical equalizing squib valve.

Within the RMU, for each squib initiator, there is a series circuit of divisional power, three load drivers/discrete outputs in series, a current monitor, and a normally closed disable/test switch. To fire the equalizing valve squib initiator, the triply redundant logic in the SSLC/ESF must time out the post GDCS initiation signal permissive, acquire at least two of four fuel zone range signals, determine that the measured value is at or below Level .5 and two-out-of-four vote the resulting divisional sensor trips and transmit separate close signals to each of the three load driver/discrete outputs. The effect is that two of the three triply redundant controller application processors must separately command all of the load drivers/discrete outputs to fire the divisional squib initiator, making the design single failure proof against inadvertent actuation.

Because each equalizing valve has three divisional squib initiators powered by three different divisions, the design is also single failure proof whenever required to operate all four valves, with any three of the four divisions of safety-related power available. The equalizing valves are needed for the long term, so they are not automatically operated by the DPS system. The equalizing valves are included in the manually initiated GDCS valve logic, and also have capability to be fired individually from safety-related VDU displays or nonsafety-related VDU displays.

Deluge System

The severe accident deluge system (GDCS subsystem) is designed to flood the containment floor in the event of a core breach that results in molten fuel on the containment floor. This system is made up of two individual and identical trains both of which contain an automatic actuation and manual actuation ability. There are 12 deluge valves each with four squib initiators (each valve train

has a manual and automatic initiator). Each of these valves feeds the Basemat-Internal Melt Arrest Coolability (BiMAC) deluge system, which floods the containment floor following a severe accident. The BiMAC system is described in more detail in Subsection 6.2.1. The logic for the deluge valves is executed in a pair of dedicated nonsafety-related PLCs driver by nonsafety-related thermocouples in the drywell floor.

Automatic actuation of the deluge valves is accomplished in concert with lower drywell high temperature. The containment floor area is divided into 30 cells, with two thermocouples installed in each cell. One thermocouple from each cell is monitored in one PLC, while the other thermocouple from each cell is monitored in a second PLC. When measured temperatures exceed the setpoint (see Table 7.3-4) at one set of thermocouples coincident with setpoints being exceeded at a second set of thermocouples in an adjacent cell, a trip signal is generated in each PLC.

The trip signal in each PLC starts an adjustable deluge squib valve non-bypassable timer. At the end of the deluge squib valve set time delay, each of the two timers outputs a trip signal to the respective deluge valve squib load driver/discrete output. The timer outputs are wired in series so each of the two timers must transmit a temperature trip signal to the corresponding series load driver/discrete output. Additionally, a pair of dedicated safety-related temperature switches monitor the drywell temperature below the RPV. Each temperature switch uses a capillary and bulb action to close a contact wired in series with the PLC timer outputs. The effect is that both PLC timer outputs and both temperature switch outputs must operate to fire the squib initiator. The temperature switches serve as power permissives for the deluge system squib initiated deluge valves. These temperature switches are safety-related to prevent inadvertent actuation of the deluge system, which could needlessly drain the GDCS pools.

An additional function of the PLC logic is to initiate operation of battery powered ignitors in the PCCS heat exchangers to prevent the accumulation of explosive mixtures of hydrogen (generated from the interaction with zircalloy) and oxygen (concrete containment floor) associated with the severe accident/core breach while the containment is at a high pressure. The ignitors will be pulsed at an appropriate rate after deluge system initiation and are powered from the same batteres that power the squib ignitors on the GDCS deluge valves. The severe accident deluge system is appropriate for this function since the PCCS heat exchangers are designed to withstand hydrogen/oxygen explosions at containment pressures associated with design basis accidents.

The deluge logic implemented in PLC is completely separate from and independent of the Q-DCIS and the N-DCIS, and is powered by dedicated pair of batteries supported by battery chargers operating on nonsafety-related power. In the event that this nonsafety-related primary electrical power is lost, deluge logic power is supplied from dedicated batteries for 72 hours. The deluge valves and PCCS ignitors are also powered by a pair of dedicated batteries supported by battery chargers operating on nonsafety-related power. In the event that this nonsafety-related power is lost, deluge valve and ignitor power is supplied from each pair of dedicated batteries for 72 hours.

The batteries for the deluge valves and ignitor are separate from and independent of the batteries for the deluge logic. Each of these batteries can fire all 12 deluge valve squibs and operate the PCCS ignitors. All of the deluge valve/ignitor batteries are separate from and independent of the other plant batteries.

The logic elements providing the controls for the actuation of the deluge valves and ignitors are contained within a separate pair of dedicated nonsafety-related PLCs and a pair of dedicated safety-related temperature switches. The only safety-related function of the deluge and ignitor logic is prevention of inadvertent actuation. The deluge logic is independent from all the other plant controls, and also is located outside containment.

Temperature indications and alarms, as well as continuity alarms and valve open/close indications for each squib valve are available in the MCR. Each valve has a normally closed disable/test switch available for maintenance purposes.

Two control switches are furnished in the MCR, to allow the operator manually to open the 12 deluge valves. These switches are of the "arm/fire" type, and are wired in series such that four deliberate operator actions (two for "arm" and two for "fire") and the safety-related temperature switches located under the RPV are required to operate the valves. These switches actuate the squib initiator on each deluge valve. A similar pair of MCR switches is used for manual initiation of the PCCS ignitors. Operator use of the "arm" portion of the switch triggers a plant alarm in the PCF.

7.3.1.2.3 **Safety Evaluation**

Section 6.3 evaluates the individual and combined capabilities of ADS and GDCS. For the entire range of nuclear process system break sizes, the ADS and GDCS ensure that the reactor core is always submerged.

Instrumentation initiating the ADS and GDCS injection and equalizing functions must respond to the potential inadequacy of core cooling regardless of the location of the breach in the RCPB. Such a breach inside or outside the containment is sensed by RPV low water level. This signal is completely independent of breach location, and is therefore used to initiate the GDCS injection and equalizing functions.

Operator action is normally not required to initiate the correct response of the GDCS. However, if the system fails to initiate, the MCR operator manually accomplishes GDCS initiation through controls and displays in the MCR. Sufficient alarms and indications in the MCR allow the operator to assess the performance of the GDCS. Specific instrumentation is addressed in Subsection 7.3.1.2.5.

The redundancy of the control and monitoring equipment for the GDCS injection and equalizing functions is consistent with the redundancy of the four divisions of the GDCS. Control and monitoring equipment is located in the MCR and is under the supervision of the MCR operator.

The initiation scheme for the GDCS injection and equalizing functions is designed such that no single failure in the initiation circuitry, with any three of the four divisions of safety-related power available, can prevent the GDCS from providing the core with adequate cooling. This is assured by the redundancy of the components in the four divisions of the GDCS.

The GDCS has no equipment protective interlocks that could interrupt automatic system operation. To initiate the GDCS injection and equalization systems manually, a RPV low-pressure signal must be present. This prevents system initiation while the reactor is at operating pressure. The GDCS injection and equalizing functions are designed to operate from safety-related power. The system instrumentation is powered by divisionally separated safety-related power. The injection squib valve, and the equalizing squib valve logic and initiation circuitry is powered by divisionally separated, safety-related power (refer to Section 8.3.1.4.1). The mechanical aspects of the GDCS are discussed in Subsection 6.3.2.

The two deluge system temperature switches and related contacts are safety-related only to prevent the inadvertent actuation of the deluge valves. No single failure within the deluge system control and monitoring equipment causes an inadvertent actuation of the deluge system. This is to protect against inadvertently draining the GDCS pools, thereby preventing the injection and equalizing systems from performing their safety functions. Similarly no single failure will cause the inadvertent actuation of the PCCS ignitors although inadvertent actuation is not a safety or operational concern.

Table 7.1-1 identifies the GDCS and the associated codes and standards applied in accordance with the SRP. This subsection addresses I&C systems conformance to regulatory requirements, guidelines, and industry standards. Any exceptions or clarifications are so noted.

7.3.1.2.3.1 Code of Federal Regulations

10 CFR 50.34(f)(1)(v)[II.K.3.13], HPCI and RCIC initiation levels:

- Conformance: The GDCS design conforms to these requirements.

10 CFR 50.34(f)(2)(iii)[I.D.1], Human factors engineering principles applied to control room design:

- Conformance: The GDCS design conforms to these requirements.

10 CFR 50.34(f)(2)(v)[I.D.3], Bypass and operable automatic status indication of safety systems:

- Conformance: The GDCS design conforms to these requirements.

10 CFR 50.43(e), Innovative means of accomplishing safety functions:

- Conformance: When innovative means are used in the I&C design it complies with 10 CFR 50.43(e).

10 CFR 50.49, Environmental qualification of electric equipment important to safety for nuclear power plants:

- Conformance: The GDCS conforms to these requirements. See Table 3.11-1 (Electrical and Mechanical Equipment for Environmental Qualification).

10 CFR 50.55a(a)(1), Quality standards for systems important to safety:

- Conformance: The GDCS design conforms to this requirement for the use of the applicable standards.

10 CFR 50.55a(h), Protection and safety systems compliance with IEEE Std. 603:

- Conformance: The GDCS design conforms to IEEE Std. 603. Conformance information is found in Subsections 7.1.6.6.1 through 7.1.6.6.1.27. Additional information concerning how the GDCS conforms to IEEE Std. 603 is discussed below.
    - IEEE Std. 603, Section 4.2 (Safety-related Functions): See Subsection 7.3.1.2.1.
    - IEEE Std. 603, Section 4.3 (Permissive Conditions for Operating Bypasses): Permissive conditions for operating bypasses are not applicable for the GDCS system.
    - IEEE Std. 603, Section 4.6 (Spatially Dependent Variables): Spatial dependency of monitored variables is not applicable to GDCS.
    - IEEE Std. 603, Section 5.2 (Completion of Protective Actions): Completion of Protective Actions is not applicable beyond that discussed in Subsection 7.1.6.6.1.3.
    - IEEE Std. 603, Section 5.7 (Capability for Test and Calibration): See Subsection 7.3.1.2.4.
    - IEEE Std. 603, Sections 6.2 and 7.2 (Manual Control): See Subsection 7.3.1.2.2.
    - IEEE Std. 603, Section 6.4 (Derivation of System Inputs): The GDCS derives its sense and command features from direct measurements.
    - IEEE Std. 603, Section 6.5 (Capability of Test and Calibration): See Subsection 7.3.1.2.4.
    - IEEE Std. 603, Sections 6.6 and 7.4 (Operating Bypasses): Operating bypasses for the GDCS are not applicable beyond that discussed in Subsection 7.1.6.6.1.22.
    - IEEE Std. 603, Sections 6.7 and 7.5 (Maintenance Bypasses): Maintenance bypasses for the GDCS are not applicable beyond that discussed in Subsection 7.1.6.6.1.23.
    - IEEE Std. 603, Section 8.2 (Non-Electrical Power Sources): Non-Electrical power sources for the GDCS are not applicable beyond that discussed in Subsection 7.1.6.6.1.26.
    - IEEE Std. 603, Section 8.3 (Maintenance Bypasses): Maintenance bypasses for the GDCS are not applicable beyond that discussed in Subsection 7.1.6.6.1.27.

10 CFR 50.63, Loss of all alternating current power:

- Conformance: The GDCS conforms to these requirements.

10 CFR 52.47, Contents of applications; technical information, level of design information:

- Conformance: The level of detail provided for the GDCS within the DCD conforms to this requirement.

10 CFR 52.47(a)(21), Resolution of unresolved and generic (medium- and high-priority) safety issues identified in NUREG-0933:

- Conformance: Resolution of unresolved and generic safety issues is discussed in Section 1.11.

10 CFR 52.47(a)(25), Interface requirements for portions of the plant not within scope of certified design application:

- Conformance: There are no interface requirements for this section.

10 CFR 52.47(b)(1), ITAAC in design certification application:

- Conformance: ITAAC are provided for the I&C systems and equipment in Tier 1.

10 CFR 52.47(c)(2), Innovative means to accomplish safety function design completeness requirements per 10 CFR 50.43(e):

- Conformance: The I&C design may use innovative means for accomplishing safety functions.

7.3.1.2.3.2 General Design Criteria

GDC 1, 2, 4, 13, 19, 20, 21, 22, 23, 24, 29, 33, 35, and 37:

- Conformance: The GDCS design complies with these GDCs.

7.3.1.2.3.3 Staff Requirements Memoranda

SECY-93-087, Item II.Q, Defense Against Common-Mode Failures in Digital Instrumentation and Control Systems:

- Conformance: The GDCS design conforms to these criteria by providing diverse I&C, as described in Section 7.8.

7.3.1.2.3.4 Regulatory Guides

RG 1.22, Periodic Testing of Protection System Actuation Functions:

- Conformance: System logic is tested continually as described in Subsection 7.3.1.2.4. Components are tested periodically during refueling outages. The GDCS design complies with RG 1.22. In the GDCS, the squib valves are not actuated during reactor operation, because their actuation would adversely affect the operation of the plant by resulting in a reactor shutdown.

RG 1.47, Bypassed and Inoperable Status Indication for Nuclear Power Plant Safety Systems:

- Conformance: The GDCS design complies with RG 1.47. Automatic indication is provided in the MCR to inform the operator that the system is inoperable or a division is bypassed.

RG 1.53, Application of the Single Failure Criterion to Safety Systems:

- Conformance: The GDCS is organized into four physically and electrically-isolated divisions that use the principles of independence and redundancy to conform to the single failure criterion as defined by IEEE Std. 379, Section 4, and IEEE Std. 603, Section 5.1; additionally, the design meets N-2 conditions. Analyses complying with IEEE Std. 379 will be used to confirm the safety-related system designs' conformance to the single failure criterion.

RG 1.62, Manual Initiation of Protective Actions:

- Conformance: The GDCS design complies with RG 1.62. Each division of the GDCS has a manual actuation switch in the MCR. Initiation of the system requires actuation of two switches to ensure that manual initiation is a premeditated act. There is an interlock between the manual initiation switches and a low reactor-pressure signal. This interlock prevents manual initiation of the system if the RPV is not depressurized.

RG 1.75, Criteria for Independence of Electrical Safety Systems:

- Conformance: The GDCS design conforms to RG 1.75 as described in Subsections 8.3.1.3 and 8.3.1.4.

RG 1.89, Environmental Qualification of Certain Electric Equipment Important to Safety for Nuclear Power Plants:

- Conformance: The GDCS design conforms to RG 1.89. See Table 3.11-1 (Electrical and Mechanical Equipment for Environmental Qualification).

RG 1.97, Criteria for Accident Monitoring Instrumentation for Nuclear Power Plants:

- Conformance: The ESBWR I&C conforms to RG 1.97. Specific instruments credited for RG 1.97 compliance are determined as part of the HFE development process as discussed in Section 7.5.

RG 1.100, Seismic Qualification of Electric and Mechanical Equipment for Nuclear Power Plants:

- Conformance: The GDCS design conforms to RG 1.100. See Sections 3.9 (Mechanical Systems and Components) and 3.10 (Seismic and Dynamic Qualification of Mechanical and Electrical Equipment).

RG 1.105, Setpoints for Safety-Related Instrumentation:

- Conformance: The setpoints used to initiate GDCS are established consistent with RG 1.105. Reference 7.3-2 provides a detailed description of the GEH methodology.

RG 1.118, Periodic Testing of Electric Power and Protection Systems:

- Conformance: Periodic testing of the protection systems is performed in accordance with IEEE Std. 338, as modified by RG 1.118.

RG 1.151, Instrument Sensing Lines:

- Conformance: NBS provides the measurement inputs to GDCS. The NBS instrument sensing lines conform to the guidelines of RG 1.151 and ISA-67.02.01. Flow restrictors are provided inside containment on instrument lines connected to the RCPB. Manual isolation valves and self-actuating excess flow check valves are provided outside the drywell. The mechanical design guidelines as defined by ISA-67.02.01 and RG 1.151 are met as applicable for each installation.

RG 1.152, Criteria for Use of Computers in Safety Systems of Nuclear Power Plants:

- Conformance: The GDCS design conforms to RG 1.152.

RG 1.153, Criteria for Safety Systems:

- Conformance: The GDCS is designed to satisfy the requirements of IEEE Std. 603, as endorsed by RG 1.153.

RG 1.168, Verification, Validation, Reviews, and Audits for Digital Computer Software Used in Safety Systems of Nuclear Power Plants:

- Conformance: The GDCS design conforms to RG 1.168 as implemented on the SSLC/ESF platform.

RG 1.169, Configuration Management Plans for Digital Computer Software Used in Safety Systems of Nuclear Power Plants:

- Conformance: The GDCS design conforms to RG 1.169 as implemented on the SSLC/ESF platform..

RG 1.170, Software Test Documentation for Digital Computer Software Used in Safety Systems of Nuclear Power Plants:

- Conformance: The GDCS design conforms to RG 1.170 as implemented on the SSLC/ESF platform.

RG 1.171, Software Unit Testing for Digital Computer Software Used in Safety Systems of Nuclear Power Plants:

- Conformance: The GDCS design conforms to RG 1.171 as implemented on the SSLC/ESF platform.

RG 1.172, Software Requirements Specifications for Digital Computer Software Used in Safety Systems of Nuclear Power Plants:

- Conformance: The GDCS design conforms to RG 1.172 as implemented on the SSLC/ESF platform.

RG 1.173, Developing Software Life Cycle Processes for Digital Computer Software Used in Safety Systems of Nuclear Power Plants:

- Conformance: The GDCS design conforms to RG 1.173 as implemented on the SSLC/ESF platform.

RG 1.180, Guidelines for Evaluating Electromagnetic and Radio-Frequency Interference in Safety-Related Instrumentation and Control Systems:

- Conformance: The GDCS design conforms to RG 1.180. See Table 3.11-1 (Electrical and Mechanical Equipment for Environmental Qualification).

RG 1.204, Guidelines for Lightning Protection of Nuclear Power Plants:

- Conformance: The GDCS design conforms to RG 1.204.

RG 1.209, Guidelines for Environmental Qualification of Safety-Related Computer-Based Instrumentation and Control Systems in Nuclear Power Plants:

- Conformance: The GDCS design conforms to RG 1.209. See Table 3.11-1 (Electrical and Mechanical Equipment for Environmental Qualification).

7.3.1.2.3.5 Branch Technical Positions

In accordance with the SRP for Section 7.3 and Table 7.1-1, the following BTPs are addressed for the GDCS:

BTP HICB-1, Guidance on Isolation of Low-Pressure Systems from the High-Pressure Reactor Coolant System:

- Conformance: Because the portion of the GDCS downstream of the squib valves connected to the RPV has a design pressure equivalent to the reactor operating pressure, and the low pressure portion of the GDCS upstream of the squib valves is open to the GDCS pools, there is no need for over-pressure protection of the low pressure portion. A high-pressure interlock is provided to prevent inadvertent manual initiation of the GDCS.

BTP HICB-8, Guidance for Application of Regulatory Guide 1.22:

- Conformance: BTP HICB-8 requires the identification of actuated equipment not tested during reactor operation and a discussion of how each conforms to the provision of Paragraph D.4 of RG 1.22. In the GDCS, the squib valves are not actuated during reactor operation, because their actuation would adversely affect the operation of the plant by resulting in a reactor shutdown.
    - Given the GDCS system requirements for zero RCPB leakage over the 60-year life of the plant, the only practical solution is for the system actuation valve to be non-reclosing with a metal diaphragm seal that is ruptured to initiate system flow.
    - The GDCS is designed to provide adequate inventory makeup to the core in the event of a LOCA. The system has sufficient redundancy and reliability that core-cooling requirements are met in the event of a LOCA.

BTP HICB-10, Guidance on Application of Regulatory Guide 1.97:

- Conformance: The ESBWR I&C conforms to RG 1.97. Specific instruments credited for RG 1.97 compliance are determined as part of the HFE development process as discussed in Section 7.5.

BTP HICB-11, Guidance on Application and Qualification of Isolation Devices:

- Conformance: SSLC/ESF logic controllers for the GDCS comply with BTP-HICB-11. SSLC/ESF logic controllers for the GDCS use safety-related fiber-optic CIMs and fiber-optic cables for interconnections between safety-related divisions for data exchange and for interconnections between safety-related and nonsafety-related devices.

BTP HICB-12, Guidance on Establishing and Maintaining Instrument Setpoints:

- Conformance: GDCS logic resides within the SSLC/ESF conforming to BTP HICB-12.

BTP HICB-14, Guidance on Software Reviews for Digital Computer-Based Instrumentation and Control Systems:

- Conformance: The GDCS design conforms to BTP HICB-14.

BTP HICB-16, Guidance on the Level of Detail Required for Design Certification Applications Under 10 CFR Part 52:

- Conformance: The GDCS design conforms to BTP HICB-16.

BTP HICB-17, Guidance on Self-Test and Surveillance Test Provisions:

- Conformance: The GDCS design conforms to BTP HICB-17.

BTP HICB-19, Guidance for Evaluation of Defense-in-Depth and Diversity in Digital Computer-Based Instrumentation and Control Systems:

- Conformance: The GDCS design conforms to BTP HICB-19. The implementation of an additional diverse instrumentation and control system is described in Section 7.8.

BTP HICB-21, Guidance on Digital Computer Real-Time Performance:

- Conformance: The GDCS design conforms to BTP HICB-21.

7.3.1.2.3.6 Three Mile Island Action Plan Requirements

In accordance with the SRP for Section 7.3 and Table 7.1-1, 10 CFR 50.34(f)(2)(v)[I.D.3] (addressed above) apply to the GDCS. The GDCS design complies with these requirements. TMI action plan requirements are generically addressed in Appendix 1A.

7.3.1.2.4 Testing and Inspection Requirements

The GDCS TLUs are self-tested continually at preset intervals. The TLUs of each logic division, and the timers for the automatic logic, can be tested during plant operation. GDCS equipment inside

containment is tested during refueling outages. Refer to Subsection 6.3.2.7.4 for a discussion of mechanical tests performed on the GDCS.

7.3.1.2.5 Instrumentation and Control Requirements

The performance and effectiveness of the GDCS in a postulated accident is verified by observing the following MCR indications (additional discussion on the GDCS instrumentation is contained in Subsection 7.3.1.2.2 and in Subsection 6.3.2.7.5):

- Status indication of locked-open maintenance valves
- Status indication and alarm of the squib-actuated valves
- Position indication of the GDCS check valves
- Drywell and RPV pressure indication
- Suppression pool high/low level alarm
- GDCS pool high/low level alarm
- Water level indication for the GDCS pools, suppression pool and RPV
- Squib valve open alarm

The safety-related GDCS instrumentation is designed to operate in a drywell environment resulting from a LOCA. The thermocouples that initiate the deluge valves are qualified to operate in a severe accident environment. The PCCS ignitors are qualified to operate in a severe accident environment. Safety-related instruments, located outside the drywell, are qualified for the environment in which they must perform their safety-related functions.

7.3.2 Passive Containment Cooling System

The Passive Containment Cooling System (PCCS) consists of condensers that are an integral part of the containment pressure boundary. The PCCS heat exchanger tubes are located in the Isolation Condenser/Passive Containment Cooling System (IC/PCCS) pool outside the containment. Containment (drywell) pressure above the suppression pool (wetwell) pressure, similar to the situation during a loss of reactor coolant into the drywell, forces flow through the PCCS condensers. Condensate from the PCCS drains to the GDCS pools. As the flow passes through the PCCS condensers, heat is rejected to the IC/PCCS pool, thereby cooling the containment atmosphere. This action occurs automatically, without the need for actuation of components. The PCCS does not have instrumentation, control logic, or power-actuated valves, and does not need or use electrical power for its operation in the first 72 hours after a LOCA. For long-term effectiveness of the PCCS, the vent fans and their isolation valves are manually initiated by operator action. For severe accident events, ignitors have been added to the lower drum of each PCCS heat exchanger to prevent the accumulation of explosive mixtures of hydrogen and oxygen with simultaneous containment high pressure conditions. Other information on the PCCS is given in Subsection 6.2.2.

7.3.3 Leak Detection and Isolation System

The primary function of the Leak Detection and Isolation System (LD&IS) is to detect and monitor leakage from the RCPB and to initiate the appropriate safety action to isolate the source of the leak. The system is designed to automatically initiate the isolation of certain designated process lines penetrating the containment, to prevent release of radioactive material from the RCPB. The initiation of the isolation functions closes the appropriate containment isolation valves. The LD&IS functions are performed in two separate and diverse safety-related platforms. The Main Steam Isolation Valve (MSIV) isolation logic functions are performed in the Reactor Trip and Isolation Function (RTIF) platform, while all other containment isolation logic functions are performed in the SSLC/ESF platform and the ICP platform (reference Section 7.3.4 and Section 7.3.6). The non-safety monitoring functions of LD&IS are performed in the N-DCIS.

7.3.3.1 System Design Bases

The following safety-related system design criteria are applicable to the design of the LD&IS.

- The LD&IS is engineered as a safety-related system, Seismic Category 1, and conforms to the regulatory requirements, guidelines, and industry standards listed in Table 7.1-1 for this system.
- The MSIV function of LD&IS logic design is fail-safe, such that loss of electrical power to the logic of one LD&IS division initiates a channel trip. The containment isolation function of LD&IS logic design is fail as-is such that loss of power to the logic of one division does not result in a trip.
- Isolation is initiated with precision and reliability once leakage has been detected from the RCPB.
- Once isolation is initiated, the action continues to completion. Deliberate operator action is required to reopen the isolation valves.
- The LD&IS design meets the single failure criterion because no single failure within the system, with any three of the four divisions of safety-related power available, initiates inadvertent isolation or prevents isolation when required.
- Automatic isolation is initiated by coincidence of any two-out-of-four channel trips, as appropriate for each monitored variable.
- Electrical communication and physical independence is maintained between safety-related divisions and between safety-related and nonsafety-related equipment.
- The LD&IS design incorporates provisions to permit bypass of a single division of sensors at any one time.
- LD&IS instrumentation uses a diversity of sensed parameters and redundant channels for initiation of containment isolation.
- Manual isolation capability is provided for diversity from the automatic logic.

- The containment leak detection methods described in RG 1.45 are adopted in the LD&IS system design.
- Identified and unidentified leakages within the containment are monitored separately to quantify the flow rates.
- The LD&IS provides different divisional isolation signals to the containment isolation valves.

7.3.3.2 System Description

The LD&IS is a four-division system designed to detect and monitor leakage from the RCPB, and isolate the source of the leak by initiating closure of the appropriate containment isolation valves. The LD&IS control and isolation logic uses two-out-of-four coincidence voting channels for each plant variable monitored for containment isolation. Various plant variables are monitored, such as flow, temperature, pressure, RPV water level, and radiation level. These are used in the logic to initiate alarms and the required control signals for containment isolation. Two or more diverse leakage parameters are monitored for each specific isolation function. The LD&IS logic functions reside in the framework of the RTIF and the SSLC/ESF platforms, where trip signals are generated, initiating the isolation functions of the LD&IS.

In addition to containment isolation after a LOCA event, safety-related control and isolation functions are implemented by the LD&IS for:

- Main steam lines and drain lines.
- ICS process lines.
- Reactor Water Cleanup and Shutdown Cooling (RWCU/SDC) System process and sampling lines.
- Fuel and Auxiliary Pools Cooling System (FAPCS) suction lines and discharge from the GDCS pools.
- Chilled water system lines to drywell coolers.
- Drywell sumps liquid drain lines.
- Containment purge and vent lines.
- RB area air supply and exhaust ducts.
- Feedwater lines.
- Fission products sampling lines.
- Isolation of high pressure makeup water injection to the RPV.

The nonsafety-related detected and monitored sources or indications of leakage are:

- Condensate flow from the upper and lower drywell air coolers.
- Leakage to the drywell from valves equipped with leak-off lines between the two valve stem packings.

- Fission product leakages into the drywell detected by the Process Radiation Monitoring System (PRMS).
- RPV head flange pressure seal leakage.
- Drywell floor drain and drywell equipment drain sump level change (sump levels and flow rates are used to quantify identified and unidentified leakages).
- Drywell temperature.
- SRV discharge line temperature.
- RB equipment and floor drain sump pump activity.
- Equipment areas temperature.
- RCCWS intersystem leakage radiation.

The LD&IS control functions initiating automatic isolation functions are classified safety-related, and these functions use redundant divisional channels satisfying both the mechanical and electrical separation criteria as well as the single failure criterion. This system operates continuously during normal reactor operation, and during plant abnormal and accident conditions.

The system design is configured as shown in Figure 7.3-3. The LD&IS interfacing sensor parameters are listed in Table 7.3-5. A detailed description of detection methods, monitored plant parameters, and the monitoring instrumentation is included in Subsection 5.2.5.

7.3.3.3 Safety Evaluation

The LD&IS control and isolation functions, including the sensors and channel instrumentation, are a safety-related system, and qualified environmentally and seismically for continuous operation during plant normal, abnormal, and accident conditions. The system design conforms to the design bases described in Subsection 7.3.3.1. The LD&IS system design uses measurements and redundant instrument channels to detect and monitor reactor coolant leakage in (and external to) the containment, and to detect and isolate the source of the leak, thereby preventing radioactive releases to the environs. The isolation logic uses four redundant divisional channels to monitor a leakage parameter and uses the two-out-of-four coincidence voting logic technique for initiation of the isolation function. This design technique improves system availability to perform safety-related functions, satisfies the single failure criterion, and permits channel bypass for maintenance and repair during normal plant operation. Loss of one channel due to failure or power loss does not cause inadvertent isolation.

The four redundant divisions of the MSIV isolation function of the LD&IS comprise a fail-safe design. The isolation logic is energized under normal conditions and de-energized to initiate the isolation function on indication of abnormal leakage. The four redundant divisions of the containment isolation feedwater isolation and HP CRD isolation functions of the LD&IS use fail as-is designs and energized-to-trip logic.

The signals used to isolate the feedwater lines by closing the feedwater isolation valves (FWIVs) are:

- Feedwater lines differential pressure high coincident with high drywell pressure
- Drywell pressure high coincident with drywell water level high
- RPV water level 0.5 with time delay
- RPV water level 8
- Drywell pressure high-high

The signals provided to stop the feedwater pumps by opening the feedwater pump Adjustable Speed Drive (ASD) controller power circuit breakers are:

- Feedwater lines differential pressure high coincident with high drywell pressure
- Drywell pressure high coincident with drywell water level high
- RPV water level 0.5 with time delay
- RPV water level 9

For certain LOCA events, High Pressure Makeup Water Injection needs to be isolated to ensure that containment pressure remains within design limits. The signals used to terminate the HP CRD flow by closing the HP CRD isolation valves are:

- Low level in two-of-three GDCS pools
- Drywell pressure high coincident with drywell water level high

Feedwater isolation on drywell pressure high-high is inhibited automatically under ATWS conditions as described in Subsection 7.8.1.1.1.2. The feedwater isolation logic can also be inhibited manually under ATWS conditions.

The LD&IS logic is designed to seal-in the isolation signal once the trip has been initiated. The isolation signal overrides any control action to trigger the opening of isolation valves. Reset of the isolation logic is required before any isolation valve can be opened manually. Manual valve override capability is provided for valves that are required to operate following an abnormal event on a valve-by-valve or line-by-line basis. The valve override requires at least two deliberate operator actions and is under administrative controls. The override status is indicated in the MCR.

The system logic design incorporates provisions to permit bypass of a single division of sensors at one time for repair and maintenance without affecting system capability to perform its safety-related functions. With one division of sensors in the bypass mode, no other division of sensors simultaneously can be bypassed.

Manual control switches and associated logic are provided in the design of the LD&IS to give the operator the capability to perform manual control functions for initiation of isolation, logic reset, channel bypass and test functions.

The instrumentation for the drywell Low Conductivity Waste (LCW) and High Conductivity Waste (HCW) sump levels is designed to meet the leakage rate requirements for identified and unidentified sources. The LD&IS includes isolation logic using drywell pressure high and low RPV water level for the isolation of the drain lines transferring waste from the sumps to the liquid radwaste system. Additional information on LD&IS operation is contained in Subsection 5.2.5.

Table 7.1-1 identifies the LD&IS function and the associated codes and standards applied, in accordance with the SRP. This subsection addresses I&C systems conformance to regulatory requirements, guidelines, and industry standards.

7.3.3.3.1 Code of Federal Regulations

10 CFR 50.34(f)(2)(iii)[I.D.1], Human factors engineering principles applied to control room design:

- Conformance: The LD&IS design conforms to these requirements.

10 CFR 50.34(f)(2)(v)[I.D.3], Bypass and operable automatic status indication of safety systems:

- Conformance: The LD&IS design conforms to these requirements.

10 CFR 50.34(f)(2)(xiv)[II.E.4.2], Containment isolation systems requirements:

- Conformance: The LD&IS design conforms to this requirement.

10 CFR 50.34(f)(2)(xv)[II.E.4.4], Containment purge/venting system response time and isolation requirements under accident conditions:

- Conformance: The LD&IS (non-MSIV) conforms to these requirements.

10 CFR 50.43(e), Innovative means of accomplishing safety functions:

- Conformance: When innovative means are used in the I&C design it complies with 10 CFR 50.43(e).

10 CFR 50.49, Environmental qualification of electric equipment important to safety for nuclear power plants:

- Conformance: The LD&IS conforms to these requirements.

10 CFR 50.55a(a)(1), Quality standards for systems important to safety:

- Conformance: The LD&IS design conforms to this requirement for the use of the applicable standards.

10 CFR 50.55a(h), Protection and safety systems compliance with IEEE Std. 603:

- Conformance: The LD&IS conforms to IEEE Std. 603. Conformance information is found in Subsections 7.1.6.6.1 through 7.1.6.6.1.27. Additional information concerning how the LD&IS conforms to IEEE Std. 603 is discussed below.
    - IEEE Std. 603, Section 4.2 (Safety-Related Functions): See Subsection 7.3.3.1.

- IEEE Std. 603, Section 4.3 (Permissive Conditions for Operating Bypasses): Permissive conditions for operating bypasses are not applicable for the LD&IS system.
- IEEE Std. 603, Section 4.6 (Spatially Dependent Variables): See Subsection 5.2.5.2.1.
- IEEE Std. 603, Section 5.2 (Completion of Protective Actions): See Subsection 7.3.3.3.
- IEEE Std. 603, Section 5.7 (Capability for Test and Calibration): See Subsection 7.3.3.4 for LD&IS (MSIV), Subsection 7.3.5.4 for Non-MSIV, & 7.4.3.4 for RWCU/SDC.
- IEEE Std. 603, Sections 6.2 and 7.2 (Manual Control): See Subsections 7.3.3.3, 7.3.3.1 for LD&IS (MSIV), and 7.3.5.1 for non-MSIV.
- IEEE Std. 603, Section 6.4 (Derivation of System Inputs): See Subsection 7.3.3.2 and Table 7.3-5.
- IEEE Std. 603, Section 6.5 (Capability of Test and Calibration): See Subsections 7.3.3.4 for MSIV and 7.3.5.2.3, 7.3.5.2.4, & 7.3.5.4 for non-MSIV.
- IEEE Std. 603, Sections 6.6 and 7.4 (Operating Bypasses): Operating bypasses for the LD&IS are not applicable beyond that discussed in Subsection 7.1.6.6.1.22.
- IEEE Std. 603, Sections 6.7 and 7.5 (Maintenance Bypasses): Maintenance bypasses for the LD&IS (MSIV) are not applicable beyond that discussed in Subsection 7.1.6.6.1.23. See Subsections 7.3.5.2.3 & 7.3.5.2.4 for (non-MSIV).
- IEEE Std. 603, Section 8.2 (Non-Electrical Power Sources): Non-Electrical power sources for the LD&IS are not applicable beyond that discussed in Subsection 7.1.6.6.1.26.
- IEEE Std. 603, Section 8.3 (Maintenance Bypasses): Maintenance bypasses for the LD&IS are not applicable beyond that discussed in Subsection 7.1.6.6.1.27.

10 CFR 50.63, Loss of all alternating current power:

- Conformance: The LD&IS conforms to these requirements.

10 CFR 52.47, Contents of applications; technical information, level of design information:

- Conformance: The level of detail provided for the LD&IS in the DCD conforms to this requirement.

10 CFR 52.47(a)(21), Resolution of unresolved and generic (medium- and high-priority) safety issues identified in NUREG-0933:

- Conformance: Resolution of unresolved and generic safety issues is discussed in Section 1.11.

10 CFR 52.47(a)(25), Interface requirements for portions of the plant not within scope of certified design application:

- Conformance: There are no interface requirements for this section.

10 CFR 52.47(b)(1), ITAAC in design certification application:

- Conformance: ITAAC are provided for the I&C systems and equipment in Tier 1.

10 CFR 52.47(c)(2), Innovative means to accomplish safety function design completeness requirements per 10 CFR 50.43(e):

- Conformance: The I&C design may use innovative means for accomplishing safety functions.

7.3.3.3.2 General Design Criteria

GDC 1, 2, 4, 13, 15, 16, 19, 20, 21, 22, 23, 24 29, and 30:

- Conformance: The LD&IS (non-MSIV) design complies with these GDCs.

GDC 1, 2, 4, 13, 15, 16, 19, 20, 21, 22, 23, 24, and 29:

- Conformance: The LD&IS (MSIV only) design complies with these GDCs.

7.3.3.3.3 Staff Requirements Memoranda

SRM on Item II.Q of SECY 93-087:

- Conformance: The LD&IS and ESF designs conform to these criteria by providing diverse I&C, described in Section 7.8.

7.3.3.3.4 Regulatory Guides

RG 1.22, Periodic Testing of Protection System Actuation Functions:

- Conformance: The LD&IS design conforms to RG 1.22.

RG 1.45, Reactor Coolant Pressure Boundary Leakage Detection Systems:

- Conformance: The LD&IS design conforms to RG 1.45 as discussed in Subsection 5.2.5.8.

RG 1.47, Bypassed and Inoperable Status Indication for Nuclear Power Plant Safety Systems:

- Conformance: The LD&IS design conforms to RG 1.47.

RG 1.53, Application of the Single Failure Criterion to Safety Systems:

- Conformance: The LD&IS is organized into four physically and electrically-isolated divisions that use the principles of independence and redundancy to conform to the single failure criterion as defined by IEEE Std. 379, Section 4, and IEEE Std. 603, Section 5.1; additionally, the design meets N-2 conditions. Analyses complying with IEEE Std. 379 will be used to confirm the safety-related system designs' conformance to the single failure criterion.

RG 1.62, Manual Initiation of Protective Actions:

- Conformance: The LD&IS design conforms to RG 1.62.

RG 1.75, Criteria for Independence of Electrical Safety Systems:

- Conformance: The LD&IS design conforms to RG 1.75 as described in Subsections 8.3.1.3 and 8.3.1.4.

RG 1.89, Environmental Qualification of Certain Electric Equipment Important to Safety for Nuclear Power Plants:

- Conformance: The LD&IS design conforms to RG 1.89. See Table 3.11-1 (Electrical and Mechanical Equipment for Environmental Qualification).

RG 1.97, Criteria for Accident Monitoring Instrumentation for Nuclear Power Plants:

- Conformance: The ESBWR I&C conforms to RG 1.97. Specific instruments credited for RG 1.97 compliance are determined as part of the HFE development process as discussed in Section 7.5.

RG 1.100, Seismic Qualification of Electric and Mechanical Equipment for Nuclear Power Plants:

- Conformance: The LD&IS design conforms to RG 1.100. See Sections 3.9 (Mechanical Systems and Components) and 3.10 (Seismic and Dynamic Qualification of Mechanical and Electrical Equipment).

RG 1.105, Setpoints for Safety-Related Instrumentation:

- Conformance: The safety-related portions of the LD&IS design conform to RG 1.105. Reference 7.3-2 provides detailed description of the GEH setpoint methodology.

RG 1.118, Periodic Testing of Electric Power and Protection Systems:

- Conformance: Periodic testing of the protection systems is performed in accordance with IEEE Std. 338, as modified by RG 1.118.

RG 1.151, Instrument Sensing Lines:

- Conformance: NBS provides the measurement inputs to LD&IS (non-MSIV). The NBS instrument sensing lines conform to the guidelines of RG 1.151 and ISA-67.02.01. Flow restrictors are provided inside containment on instrument lines connected to the RCPB. Manual isolation valves and self-actuating excess flow check valves are provided outside the drywell. The mechanical design guidelines as defined by ISA-67.02.01 and RG 1.151 are met as applicable for each installation.

RG 1.152, Criteria for Use of Computers in Safety Systems of Nuclear Power Plants:

- Conformance: The LD&IS design conforms to RG 1.152.

RG 1.153, Criteria for Safety Systems:

- Conformance: The LD&IS is designed to satisfy the requirements of IEEE Std. 603, as endorsed by RG 1.153.

RG 1.168, Verification, Validation, Reviews, and Audits for Digital Computer Software Used in Safety Systems of Nuclear Power Plants:

- Conformance: The LD&IS (MSIV Only) design conforms to RG 1.168 as implemented on the RTIF platform.

- The LD&IS (non-MSIV) design conforms to RG 1.168 as implemented on the SSLC/ESF platform.

RG 1.169, Configuration Management Plans for Digital Computer Software Used in Safety Systems of Nuclear Power Plants:

- Conformance: The LD&IS (MSIV Only) design conforms to RG 1.169 as implemented on the RTIF platform.
- The LD&IS (non-MSIV) design conforms to RG 1.169 as implemented on the SSLC/ESF platform.

RG 1.170, Software Test Documentation for Digital Computer Software Used in Safety Systems of Nuclear Power Plants:

- Conformance: The LD&IS (MSIV Only) design conforms to RG 1.170 as implemented on the RTIF platform.
- The LD&IS (non-MSIV) design conforms to RG 1.170 as implemented on the SSLC/ESF platform.

RG 1.171, Software Unit Testing for Digital Computer Software Used in Safety Systems of Nuclear Power Plants:

- Conformance: The LD&IS (MSIV Only) design conforms to RG 1.171 as implemented on the RTIF platform.
- The LD&IS (non-MSIV) design conforms to RG 1.171 as implemented on the SSLC/ESF platform.

RG 1.172, Software Requirements Specifications for Digital Computer Software Used in Safety Systems of Nuclear Power Plants:

- Conformance: The LD&IS (MSIV Only) design conforms to RG 1.172 as implemented on the RTIF platform.
- The LD&IS (non-MSIV) design conforms to RG 1.172 as implemented on the SSLC/ESF platform.

RG 1.173, Developing Software Life Cycle Processes for Digital Computer Software used in Safety Systems of Nuclear Power Plants:

- Conformance: The LD&IS (MSIV Only) design conforms to RG 1.173 as implemented on the RTIF platform.
- The LD&IS (non-MSIV) design conforms to RG 1.173 as implemented on the SSLC/ESF platform.

RG 1.180, Guidelines for Evaluating Electromagnetic and Radio-Frequency Interference in Safety-Related Instrumentation and Control Systems:

- Conformance: The LD&IS design conforms to RG 1.180. See Table 3.11-1 (Electrical and Mechanical Equipment for Environmental Qualification).
- RG 1.204, Guidelines for Lightning Protection of Nuclear Power Plants:
- Conformance: The LD&IS design conforms to RG 1.204.

RG 1.209, Guidelines for Environmental Qualification of Safety-Related Computer-Based Instrumentation and Control Systems in Nuclear Power Plants:

- Conformance: The LD&IS design conforms to RG 1.209. See Table 3.11-1 (Electrical and Mechanical Equipment for Environmental Qualification).

7.3.3.3.5 **Branch Technical Positions**

BTP HICB-8, Guidance for Application of Regulatory Guide 1.22:

- Conformance: The LD&IS design complies with BTP HICB-8.

BTP HICB-10, Guidance on Application of Regulatory Guide 1.97:

- Conformance: The ESBWR I&C conforms to RG 1.97. Specific instruments credited for RG 1.97 compliance are determined as part of the HFE development process as discussed in Section 7.5.

BTP HICB-11, Guidance on Application and Qualification of Isolation Devices:

- Conformance: The LD&IS (MSIV only) design complies with BTP HICB-11. RTIF logic controllers for the LD&IS (non-MSIV) use safety-related fiber-optic CIMs and fiber-optic cables for interconnections between safety-related divisions for data exchange and for interconnections between safety-related and nonsafety-related devices.

  The LD&IS (non-MSIV) design complies with BTP HICB-11. SSLC/ESF logic controllers for the LD&IS (non-MSIV) use safety-related fiber-optic CIMs and fiber-optic cables for interconnections between safety-related divisions for data exchange and for interconnections between safety-related and nonsafety-related devices.

BTP HICB-12, Guidance on Establishing and Maintaining Instrument Setpoints:

- Conformance: The LD&IS design complies with BTP HICB-12.

BTP HICB-14, Guidance on Software Reviews for Digital Computer-Based Instrumentation and Control Systems:

- Conformance: The LD&IS design complies with BTP HICB-14.

BTP HICB-16, Guidance on the Level of Detail Required for Design Certification Applications Under 10 CFR Part 52:

- Conformance: The LD&IS design complies with BTP HICB-16.

BTP HICB-17, Guidance on Self-Test and Surveillance Test Provisions:

- Conformance: The LD&IS design complies with BTP HICB-17.

BTP HICB-19, Guidance for Evaluation of Defense-in-Depth and Diversity in Digital Computer-Based Instrumentation and Control Systems:

- Conformance: The LD&IS design complies with BTP HICB-19. The implementation of an additional diverse instrumentation and control system is described in Section 7.8.

BTP HICB-21, Guidance on Digital Computer Real-Time Performance:

- Conformance: The LD&IS design complies with BTP HICB-21.

7.3.3.3.6 Three Mile Island Action Plan Requirements

In accordance with the SRP for 7.3 and with Table 7.1-1, 10 CFR 50.34(f)(2)(v)[I.D.3], and 10 CFR 50.34(f)(2)(xiv)[II.E.4.2] apply to the LD&IS. The LD&IS complies with these requirements as indicated above. TMI action plan requirements are addressed in Appendix 1A.

7.3.3.4 Testing and Inspection Requirements

7.3.3.4.1 In-service & Surveillance Tests

In-service testing of the leak detection and monitoring channels is performed periodically to verify operability during normal plant operation and to assure that each tested channel can perform its intended design function. The surveillance tests include instrument channel checks, functional tests, verification of proper sensor and channel calibration, and response time tests.

The LD&IS instrument channels use conventional sensors for leak detection and monitoring, and require no special or unique testing methods.

The setpoint verifications, trip logic tests, and channel integrity tests for the safety-related functions of LD&IS are processed and tested by the RTIF and SSLC/ESF platforms.

7.3.3.4.2 Main Steam Isolation Valve Closure Tests

The LD&IS design provides manual capability and incorporates logic provisions to test closure of each of the MSIVs during normal reactor operation. To verify MSIV closure capability, each MSIV is tested periodically for partial closure while in service without causing a plant outage.

7.3.3.4.3 Testing and Maintenance in the Bypass Mode

Testing, calibration, and maintenance are performed on the equipment in accordance with established procedures when the channel is either out of service or deliberately has been bypassed.

7.3.3.5 Instrumentation and Controls Requirements

The LD&IS is designed to detect and monitor leakage from the RCPB, using a diversity of parameters and redundant instrument channels. The monitored leakage parameters are provided

continuously to the RTIF and SSLC/ESF for processing and initiation of trips required for the isolation functions.

The LD&IS instrumentation requirements for each specific monitoring and isolation function are described in detail in Subsection 5.2.5. The plant parameters monitored for leakage detection, isolation, and alarms are summarized in Tables 5.2-6 and 5.2-7. The containment isolation functions accomplished by valves and control signals required for the isolation of process lines penetrating the containment are summarized in Tables 6.2-15 through 6.2-42.

7.3.4 Control Room Habitability System

The Control Room Habitability System (CRHS) is an SSLC/ESF system that provides a safe environment within the MCR, allowing the operator(s) to:

- Control the nuclear reactor and its auxiliary systems during normal conditions
- Safely shut down the reactor
- Maintain the reactor in a safe condition during abnormal events and accidents

The CRHS includes:

- CB shielding and area radiation monitoring
- The Control Room Habitability Area HVAC Subsystem
- Provision for emergency food and water storage
- Emergency kitchen and sanitary facilities
- Provision for protection from, and removal of, airborne radioactive contaminants
- Provision for removal of smoke

The Control Room Habitability Area (CRHA) envelope, ventilation inlet/return isolation dampers, redundant Emergency Filtration Units (EFUs) in the emergency HVAC, and their associated controls are safety-related. Section 6.4 and Subsections 9.4.1 and 9.5.1.11 provide detailed information on the CRHS.

7.3.4.1 System Design Bases

The design bases of the CRHS are detailed in Subsections 6.4.1 and 9.4.1.1.

7.3.4.2 System Description

The CRHS safety-related instrumentation is designed to isolate the MCR envelope and re-align to the emergency filtration mode following:

- Detection of high radiation in the inlet air supply (automatic action)(safety-related function).
- Detection of loss of AC power / station black out (SBO) (automatic action) (safety-related function).

- Detection of smoke in the inlet air supply, or in the CRHA general area (manual isolation)(nonsafety-related function).

Additional CRHS safety-related instrumentation is designed to only swap over the operating emergency filtration train following:

- Detection of high radiation downstream of the operating EFU filter train (automatic action) (nonsafety-related function).
- Detection of low flow at the outlet of the operating EFU filter train (automatic action) (safety-related function).

The PRMS in the CRHA consists of four safety-related divisional radiation channels to monitor the air intake to the CB. The monitoring systems warn of the presence of significant radioactive contamination in inlet air. Each radiation channel consists of a gamma sensitive detector and an area radiation monitor located in the MCR. The PRMS is safety-related as described in Subsection 11.5.

Each PRMS sensor provides an input signal to the associated SSLC/ESF VLU function, on detection of high radiation in the inlet ventilation air. The main air ventilation duct, the smoke purge intake duct, the smoke purge exhaust duct, and the restroom exhaust duct in the CRHA are each furnished with a pair of safety-related, normally closed, air operated isolation dampers connected in series. The air operated dampers are controlled by four independent solenoid valves powered from four separate divisions. This configuration ensures that the system returns automatically to its safe condition upon failure of a mechanical component, loss of air, loss of control, or loss of power. The air operated dampers installed in the smoke purge intake duct, the smoke purge exhaust duct, and in the restroom exhaust duct can be controlled manually.

Each EFU train is equipped with two parallel fans, 100% capacity each, and four electrically operated, normally closed discharge isolation dampers, mounted in a redundant (two in series) parallel configuration. Electrically operated dampers installed in series are powered from the same division as their respective fan. Failure of one division does not affect the operation of the other division.

EFU automatic operations are controlled by four redundant safety-related EFU discharge flow detectors installed in each EFU discharge duct. If the discharge flow drops to the low set point, the operating fan motor is de-energized, its electrically operated discharge dampers are closed, a stand-by (second in the unit) fan motor is energized and its electrically operated discharge dampers are opened. If the discharge flow is not sufficiently improved, the affected EFU train is automatically disengaged and a secondary EFU train is energized, following the protocol described above. The secondary EFU train also starts automatically to continue the emergency filtration mode if radiation is detected downstream, of the EFU filter train. The radiation setpoint for initiation of the EFU train swap combined with the radiation sensor location and air duct length is such that the swap over will occur prior to exceeding the 10 CFR 50, Appendix A, GDC 19 requirements.

During radioactive release events, the SSLC/ESF voting algorithm in each division uses two-out-of-four logic to produce an actuation signal to start the CRHA isolation mode which:

- Energizes the primary divisional fan of the primary EFU.
- Opens the primary EFU's redundant divisional electrically operated isolation dampers.
- Generates the signal to close the safety-related air operated isolation dampers installed in the main air supply duct.
- Stops the nonsafety-related fan in the main air supply air handling unit (signal forwarded to the N-DCIS via an isolation gate).
- Closes the nonsafety-related damper in the air handling unit (signal forwarded to the N-DCIS via an isolated signal path and gateway).

Normally closed air operated safety-related isolation dampers, installed in series in the main air supply air handling unit discharge duct are controlled by four divisional solenoid valves. During normal operation the SSLC/ESF is used to manually open the redundant safety-related air operated isolation dampers by producing an actuation signal to energize the associated four solenoid valves. Simultaneously a permissive and start signal is given to the non safety-related air intake handling unit and its non safety-related air operated damper through an isolated signal path and gateway to allow the main air to be discharged into the MCR. During the isolation mode, the SSLC/ESF de-energizes the solenoid valves and closes the isolation dampers. Because the two air operated dampers are in series, any one of them can close the airflow path.

The functions of the SSLC/ESF are depicted in Figure 7.3-5 and detailed information is presented in Subsection 7.3.5. The four redundant divisions provide a fault-tolerant architecture allowing a single division of sensors bypass for on-line testing, maintenance, and repair without losing reliable trip capability. In such a bypass condition the system automatically defaults to 2-out-of-3 coincident voting. If one of the three remaining active divisions fails, the two remaining independent and redundant divisions are able to generate an actuation signal to close isolation damper(s). At least one of the redundant dampers actuates in response to the detection of high inlet air radiation under all of the postulated design basis failures. This arrangement thus conforms to safety-related system requirements for single failure proof capability, fault tolerance, independence, and separation, as required by IEEE Std. 603, Sections 5.1, 5.5, and 5.6.

The CRHA isolation dampers have the capability to be actuated manually from the MCR in accordance with IEEE Std. 603, Sections 5.8, 6.2, and 7.2.

If the nonsafety-related main air supply units are de-energized due to a loss of AC power / SBO, the SSLC/ESF automatically starts the emergency filtration mode which starts the primary EFU providing air to the CRHA. The signal processing and actuation logic are as described above for isolation following detection of high radiation at the CRHA main air supply inlet.

The nonsafety-related smoke detectors are provided as required by NFPA 90A to detect smoke in the system ductwork and in the CRHA general areas. Each smoke detection channel contains redundant smoke detectors. Each smoke detector signal provides alarm inputs to the MCR. Based on the smoke location, the operator manually starts an EFU (if smoke is not detected in the EFU's air intake zone), then manually initiates CRHA isolation, or starts smoke removal from the CRHA. When the isolation dampers are closed and AC power is available, the Control Room Habitability Area Heating, Ventilation, and Air Conditioning Subsystem (CRHAVS) recirculation air handling unit continues to operate normally providing temperature control in the MCR. If the normal AC power is not available, the nonsafety-related redundant HVAC equipment installed in the CRHA is powered for two hours from nonsafety-related batteries. After that interval, if the nonsafety-related HVAC equipment stops running, safety-related temperature sensors with two-out-of-four logic automatically trip the power to pre-defined N-DCIS components and other nonsafety-related electrical loads in the MCR, removing the heat load generated by these sources. Smoke removal is described in Subsections 9.4.1.2 and 9.5.1.11.

If the redundant, nonsafety-related CRHAVS cooling is lost, and the CRHA temperature increases, safety-related sensors provide a trip signal via SSLC/ESF to de-energize nonsafety-related pre-defined N-DCIS equipment and other nonsafety-related electrical loads in the CRHA. Safety-related temperature sensors provide the logic to trip selected N-DCIS loads in the CRHA.

The redundant safety-related components, including the I&C (i.e., monitoring channels) in the CRHA, CRHA isolation dampers, and EFUs, satisfy the single failure criterion. The isolation dampers in each pair are physically separated. They are physically separated from the EFUs as well. The nonsafety-related air handling units and the safety-related isolation dampers and EFUs are mechanically and electrically separated. There is no intervention by the nonsafety-related components on the safety-related components. CRHA air operated isolation dampers are closed following loss of power, loss of air, or control signal failures. This conforms to the fail-safe principle, in which components or systems are designed to return automatically to their safe condition upon failure.

The CRHS isolation and EFU operation cannot be shut down automatically. EFU disengagement and de-energization of safety-related isolation dampers can be accomplished manually.

The CRHS isolation and EFU actuation are part of the SSLC/ESF system logic as illustrated in Figure 7.3-5. The required instrumentation for CRHS is described in Subsection 9.4.1.5. Alarms for CRHA/CRHAVS conditions are discussed in Subsection 6.4.8.

7.3.4.3 Safety Evaluation

A safety evaluation of the CRHS is provided in Subsections 6.4.5 and 9.4.1.3.

Table 7.1-1 identifies the CRHS and the associated codes and standards applied, in accordance with the SRP. This subsection addresses I&C systems conformance to regulatory requirements, guidelines, and industry standards.

7.3.4.3.1 Code of Federal Regulations

10 CFR 50.34(f)(2)(iii)[I.D.1], Human factors engineering principles applied to control room design:

- Conformance: The CRHS design conforms to these requirements.

10 CFR 50.34(f)(2)(v)[I.D.3], Bypass and operable automatic status indication of safety systems:

- Conformance: The CRHS design conforms to these requirements.

10 CFR 50.34(f)(2)(xxviii)[III.D.3.4], Control room habitability design requirements due to pathways for radiation and radioactivity under accident conditions:

- Conformance: The CRHS design conforms to these requirements.

10 CFR 50.43(e), Innovative means of accomplishing safety functions:

- Conformance: When innovative means are used in the I&C design it complies with 10 CFR 50.43(e).
- 10 CFR 50.49, Environmental qualification of electric equipment important to safety for nuclear power plants:
- Conformance: The CHRS conforms to these requirements. See Table 3.11-1 (Electrical and Mechanical Equipment for Environmental Qualification).

10 CFR 50.55a(a)(1), Quality standards for systems important to safety:

- Conformance: The CRHS design conforms to this requirement for the use of the applicable standards.

10 CFR 50.55a(h), Protection and safety systems compliance with IEEE Std. 603:

- Conformance: The CRHS design conforms to IEEE Std. 603. Conformance information is found in Subsections 7.1.6.6.1.1 through 7.1.6.6.1.27. Additional information concerning how the CRHS conforms to IEEE Std. 603 is discussed below.
    - IEEE Std. 603, Section 4.2 (Safety-related Functions): See Subsection 6.4.1.1.
    - IEEE Std. 603, Section 4.3 (Permissive Conditions for Operating Bypasses): Permissive conditions for operating bypasses are discussed in Subsection 7.3.4.2.
    - IEEE Std. 603, Section 4.6 (Spatially Dependent Variables): Spatial dependency of monitored variables is not applicable to CRHS.
    - IEEE Std. 603, Section 5.2 (Completion of Protective Actions): Completion of Protective Actions are not applicable beyond that discussed in Subsection 7.1.6.6.1.3.
    - IEEE Std. 603, Section 5.7 (Capability for Test and Calibration): Test and Calibrate features beyond those discussed in Subsection 7.1.6.6.1.8 are not applicable.
    - IEEE Std. 603, Sections 6.2 and 7.2 (Manual Control): See Subsection 7.3.4.2.

- IEEE Std. 603, Section 6.4 (Derivation of System Inputs): The CRHS derives its sense and command features from direct measurements as described in Subsection 7.3.4.2.
- IEEE Std. 603, Sections 6.5 (Capability of Test and Calibration): Capability for Test and Calibrate features beyond those discussed in Subsection 7.1.6.6.1.21 is not applicable.
- IEEE Std. 603, Sections 6.6 and 7.4 (Operating Bypasses): Operating bypasses for the CRHS are discussed in Subsection 7.3.4.2.
- IEEE Std. 603, Sections 6.7 and 7.5 (Maintenance Bypasses): Maintenance bypasses for the CRHS are not applicable beyond those discussed in Subsection 7.1.6.6.1.23.
- IEEE Std. 603, Section 8.2 (Non-Electrical Power Sources): Non-Electrical power sources for the CRHS are not applicable beyond those discussed in Subsection 7.1.6.6.1.26.
- IEEE Std. 603, Section 8.3 (Maintenance Bypasses): Maintenance bypasses for the CRHS are discussed in Subsection 7.3.4.2.

10 CFR 50.63, Loss of all alternating current power:

- Conformance: The CRHS conforms to these requirements.

10 CFR 52.47, Contents of applications; technical information, level of design information:

- Conformance: The level of detail provided for the CRHS in the DCD conforms to this requirement.

10 CFR 52.47(a)(21), Resolution of unresolved and generic (medium- and high-priority) safety issues identified in NUREG-0933:

- Conformance: Resolution of unresolved and generic safety issues is discussed in Section 1.11.

10 CFR 52.47(a)(25), Interface requirements for portions of the plant not within scope of certified design application:

- Conformance: There are no interface requirements for this section.

10 CFR 52.47(b)(1), ITAAC in design certification application:

- Conformance: ITAAC are provided for the I&C systems and equipment in Tier 1.

10 CFR 52.47(c)(2), Innovative means to accomplish safety function design completeness requirements per 10 CFR 50.43(e):

- Conformance: The I&C design may use innovative means for accomplishing safety functions.

7.3.4.3.2 General Design Criteria

GDC 1, 2, 4, 13, 19, 20, 21, 22, 23, 24 and 29:

- Conformance: The CRHS design complies with these GDCs.

7.3.4.3.3 Staff Requirements Memoranda

SRM on Item II.Q of SECY 93-087:

- Conformance: The CRHS and ESF designs conform to these criteria as described in Subsection 7.8.2.2.

7.3.4.3.4 Regulatory Guides

RG 1.22, Periodic Testing of Protection System Actuation Functions:

- Conformance: The CRHS design conforms to RG 1.22.

RG 1.47, Bypassed and Inoperable Status Indication for Nuclear Power Plant Safety Systems:

- Conformance: The CRHS design conforms to RG 1.47.

RG 1.53, Application of the Single Failure Criterion to Safety Systems:

- Conformance: The CRHS is organized into four physically and electrically-isolated divisions that use the principles of independence and redundancy to conform to the single failure criterion as defined by IEEE Std. 379, Section 4, and IEEE Std. 603, Section 5.1; additionally, the design meets N-2 conditions. Analyses complying with IEEE Std. 379 will be used to confirm the safety-related system designs' conformance to the single failure criterion.

RG 1.62, Manual Initiation of Protective Actions:

- Conformance: The CRHS design conforms to RG 1.62.

RG 1.75, Criteria for Independence of Electrical Safety Systems:

- Conformance: The CRHS design conforms to RG 1.75 as described in Subsections 8.3.1.3 and 8.3.1.4.

RG 1.89, Environmental Qualification of Certain Electric Equipment Important to Safety for Nuclear Power Plants:

- Conformance: The CRHS design conforms to RG 1.89. See Table 3.11-1 (Electrical and Mechanical Equipment for Environmental Qualification).

RG 1.97, Criteria for Accident Monitoring Instrumentation for Nuclear Power Plants:

- Conformance: The ESBWR I&C conforms to RG 1.97. Specific instruments credited for RG 1.97 compliance are determined as part of the HFE development process as discussed in Section 7.5.

RG 1.100, Seismic Qualification of Electric and Mechanical Equipment for Nuclear Power Plants:

- Conformance: The CRHS design conforms to RG 1.100. See Sections 3.9 (Mechanical Systems and Components) and 3.10 (Seismic and Dynamic Qualification of Mechanical and Electrical Equipment).

RG 1.105, Setpoints for Safety-Related Instrumentation:

- Conformance: The CRHS design conforms to RG 1.105. Reference 7.3-2 provides detailed description of the GEH setpoint methodology.

RG 1.118, Periodic Testing of Electric Power and Protection Systems:

- Conformance: Periodic testing of the protection systems is performed in accordance with IEEE Std. 338, as modified by RG 1.118.

RG 1.152, Criteria for Use of Computers in Safety Systems of Nuclear Power Plants:

- Conformance: The CRHS design conforms to RG 1.152.

RG 1.153, Criteria for Safety Systems:

- Conformance: The CRHS is designed to satisfy the requirements of IEEE Std. 603, as endorsed by RG 1.153.

RG 1.168, Verification, Validation, Reviews, and Audits for Digital Computer Software Used in Safety Systems of Nuclear Power Plants:

- Conformance: The CRHS design conforms to RG 1.168 as implemented on the SSLC/ESF platform.

RG 1.169, Configuration Management Plans for Digital Computer Software Used in Safety Systems of Nuclear Power Plants:

- Conformance: The CRHS design conforms to RG 1.169 as implemented on the SSLC/ESF platform.

RG 1.170, Software Test Documentation for Digital Computer Software Used in Safety Systems of Nuclear Power Plants:

- Conformance: The CRHS design conforms to RG 1.170 as implemented on the SSLC/ESF platform.

RG 1.171, Software Unit Testing for Digital Computer Software Used in Safety Systems of Nuclear Power Plants:

- Conformance: The CRHS design conforms to RG 1.171 as implemented on the SSLC/ESF platform.

RG 1.172, Software Requirements Specifications for Digital Computer Software Used in Safety Systems of Nuclear Power Plants:

- Conformance: The CRHS design conforms to RG 1.172 as implemented on the SSLC/ESF platform.

RG 1.173, Developing Software Life Cycle Processes for Digital Computer Software Used in Safety Systems of Nuclear Power Plants:

- Conformance: The CRHS design conforms to RG 1.173 as implemented on the SSLC/ESF platform.

RG 1.180, Guidelines for Evaluating Electromagnetic and Radio-Frequency Interference in Safety-Related Instrumentation and Control Systems:

- Conformance: The CRHS design conforms to RG 1.180. See Table 3.11-1 (Electrical and Mechanical Equipment for Environmental Qualification).

RG 1.204, Guidelines for Lightning Protection of Nuclear Power Plants:

- Conformance: The CRHS design conforms to RG 1.204.

RG 1.209, Guidelines for Environmental Qualification of Safety-Related Computer-Based Instrumentation and Control Systems in Nuclear Power Plants:

- Conformance: The CRHS design conforms to RG 1.209. See Table 3.11-1 (Electrical and Mechanical Equipment for Environmental Qualification).

7.3.4.3.5 **Branch Technical Positions**

BTP HICB-8, Guidance for Application of Regulatory Guide 1.22:

- Conformance: The CRHS design complies with BTP HICB-8.

BTP HICB-10, Guidance on Application of Regulatory Guide 1.97:

- Conformance: The ESBWR I&C conforms to RG 1.97. Specific instruments credited for RG 1.97 compliance are determined as part of the HFE development process as discussed in Section 7.5.

BTP HICB-11, Guidance on Application and Qualification of Isolation Devices:

- Conformance: The CRHS design complies with BTP HICB-11. SSLC/ESF logic controllers for the CRHS use safety-related fiber-optic CIMs and fiber-optic cables for interconnections between safety-related divisions for data exchange and for interconnections between safety-related and nonsafety-related devices.

BTP HICB-12, Guidance on Establishing and Maintaining Instrument Setpoints:

- Conformance: The CRHS design complies with BTP HICB-12.

BTP HICB-14, Guidance on Software Reviews for Digital Computer-Based Instrumentation and Control Systems:

- Conformance: The CRHS design complies with BTP HICB-14.

BTP HICB-16, Guidance on the Level of Detail Required for Design Certification Applications Under 10 CFR Part 52:

- Conformance: The CRHS design complies with BTP HICB-16.

BTP HICB-17, Guidance on Self-Test and Surveillance Test Provisions:

- Conformance: The CRHS design complies with BTP HICB-17.

BTP HICB-19, Guidance for Evaluation of Defense-in-Depth and Diversity in Digital Computer-Based Instrumentation and Control Systems:

- Conformance: The CRHS design complies with BTP HICB-19. The implementation of an additional diverse instrumentation and control system is described in Section 7.8.

BTP HICB-21, Guidance on Digital Computer Real-Time Performance:

- Conformance: The CRHS design complies with BTP HICB-21.

7.3.4.3.6 Three Mile Island Action Plan Requirements

In accordance with Table 7.1-1, 10 CFR 50.34(f)(2)(v)[I.D.3] applies to the CRHS. The CRHS complies with the regulatory requirements indicated above. TMI action plan requirements are addressed in Appendix 1A.

7.3.4.4 Testing and Inspection Requirements

Testing and inspections requirements are identified in Subsections 6.4.7 and 9.4.1.4.

7.3.4.5 Instrumentation and Control Requirements

The required instrumentation for the CRHS is described in Subsection 9.4.1.5 and alarms for abnormal CRHA/CRHAVS conditions are addressed in Subsection 6.4.8.

7.3.5 Safety System Logic and Control/Engineered Safety Features

7.3.5.1 System Design Bases

The SSLC/ESF system performs the control logic processing of the plant sensor data and manual control switch signals activating the functions of the LD&IS (non-MSIV), ECCS and CRHS. The SSLC/ESF also performs control logic processing for the decay heat removal, - safe, stable shutdown, and reactor pressure control functions of the ICS. SSLC/ESF also provides safety-related display information in support of safety-related system performance and accident monitoring. Logic for detecting and signaling a control rod separation is also included in the SSLC/ESF system.

The SSLC/ESF:

- Monitors safety-related signals providing automatic control of the plant safety protection systems.
- Performs processing of plant sensor and equipment interlock signals according to the required trip and interlock logic, including time delays, of each safety-related interfacing plant system or system important to safe plant operation.

- Meets the performance requirements of each safety-related interfacing plant system or system important to safe plant operation, including transient response, delay time, and overall time to trip system actuators, or initiates necessary system operation.
- Monitors safety-related manual control switches used for system or component test, protection system manual initiation, and individual control of equipment actuators.
- Furnishes trip output signals to actuators driving safety-related system equipment (e.g. solenoids and squib explosive-actuated valves).
- Furnishes trip or initiation outputs signals to the logic of interfacing functions.
- Provides diagnostic facilities for detecting imminent failure of safety-related system components and provides an operator interface facilitating quick repair.
- Provides safety-related accident monitoring display information, alarm and status outputs to operator displays, annunciators, and the PCF.
- Satisfies regulatory requirements for implementation of:
    - The single failure criterion
    - Defense-in-depth protection
    - Testability
    - Separation and independence
    - Bypass of certain functions and indication thereof

7.3.5.2 System Description

SSLC/ESF is the decision-making control logic segment for the ESF systems. The SSLC/ESF processes automatic and manual demands for ESF system actuations, based upon sensed plant process parameters or at operator request. The SSLC/ESF includes the I&C implementing the following functions:

- The non-MSIV isolation functions of the LD&IS.
- The ADS functions of the NBS for SRV and DPV control.
- The ECCS, and decay heat removal — safe, stable shutdown and reactor pressure control functions of the ICS.
- The control room isolation function of the CRHS.
- Logic for the detection of a CRD system control rod separation event and transmits the rod separation signal to the RC&IS (described in Subsections 4.6.1 and 7.7.2.2.7).

The SSLC/ESF system also provides safety-related display information for system performance monitoring and accident monitoring (described in Subsection 7.5.1), and pool monitoring (described in Subsection 7.5.5) with the exception of SPTM, which is collected by RTIF.

7.3.5.2.1 General SSLC/ESF Arrangement

The SSLC/ESF resides in four independent and separated instrumentation divisions. The SSLC/ESF integrates the control logic of the safety-related systems in each division into firmware or micro-processor based, software-controlled, processing modules located in divisional cabinets in the safety-related equipment rooms of the CB. The SSLC/ESF runs without interruption in all modes of plant operation to support required safety functions.

The SSLC/ESF consists of the non-MSIV isolation functions of the LD&IS, the ECCS functions, and the isolation function of the CRHS. The ESF/ECCS part includes the functions of SRV and DPV initiation, GDCS initiation, SLC initiation, and the core cooling and shutdown cooling logic functions of the ICS. There are separate multiplexing networks for RTIF and SSLC/ESF functions within each division. Figure 7.3-4 shows a functional block diagram of the SSLC/ESF portion of the system. The RPS function is discussed in Subsection 7.2.1, with the RPS functional block diagram shown in Figure 7.2-1. The ATWS/SLC mitigation function is discussed in Subsection 7.8.1.1.

Most SSLC/ESF input data are process variables multiplexed by the Q-DCIS in four physically and electrically isolated redundant instrumentation divisions (Subsection 7.1.3). Each of the four independent and separated Q-DCIS channels feeds separate and independent SSLC/ESF equipment in the same division.

Additional SSLC configuration and communication layout is provided in Figures 7.3-6 through 7.3-10.

Figure 7.3-6 presents the design configuration of the SSLC/ESF comprising centralized and triply redundant controller application processors with RMU (data acquisition) cabinets located in both the Reactor and Control Building.

Figure 7.3-7 is a detailed view of the controller application processor and communication card depicting the I/O and communications extensions.

Figure 7.3-8 depicts the inter-divisional communication used to support two-out-of-four logics. All communication paths are redundant. Since CIM devices are actively powered and the SSLC/ESF design is N-2, the two paths are arranged such that if any two divisions lose power or any single communication path fails (failure would require at least two "breaks"), there will still be communication available between the remaining two divisions to allow a two-out-of-four initiation vote.

Figure 7.3-9 depicts the intradivisional communication used to support the SSLC/ESF and RTIF-NMS communication to the divisional VDUs. All divisions are each connected to two VDUs in the main control room and divisions 1 and 2 are additionally connected to the remote shutdown panels. The same message authentication protocols are used as for inter-divisional and nonsafety-related communication.

Figure 7.3-10 depicts the communication between the divisional SSLC/ESF and the N-DCIS where the various signals can be recorded, indicated, sent to nonsafety-related controllers or monitored.

7.3.5.2.2 Signal Logic Processing

Signals that must meet time response constraints and signals from system logic that are proximal to the SSLC/ESF cabinets are directly connected to the divisional cabinets in the safety-related equipment rooms in the CB. These signals are derived from sensors that are redundant in the four divisions (for each sensed variable).

All input data are processed within the RMU function of the Q-DCIS. The sensor data are transmitted through the DCIS network to the SSLC/ESF Digital Trip Module (DTM) function for setpoint comparison. A trip (or non-trip) signal is generated from this function. Processed trip signals from a division and trip signals from the other three divisions are transmitted through the communication interface and are processed in the VLU function for two-out-of-four voting. The final trip signal (from two or more divisions) is then transmitted to the RMU function via the Q-DCIS network to initiate mechanical actuation devices.

The VLU functions are implemented in the SSLC/ESF triply redundant controller application processors and the results of the two-out-of-four vote is sent to the two or three separate load drivers/discrete outputs in the RMUs. Each load driver/discrete output is individually addressed and both (solenoid) or all three (squib initiator) load drivers/discrete outputs must close to operate the solenoid/squib initiator. The redundancy within a division is necessary to prevent single failures within a division from causing a squib initiator to fire; as a result two of three controller application processors and all three load drivers/discrete outputs are required to initiate the squib. Self tests within the SSLC/ESF determine if there are component failures and these failures are indicated in the MCR.

To prevent a single I&C failure from causing inadvertent actuations, the triply redundant SSLC/ESF logic requires that at least two-out-of-three controller application processors (DTM and VLU function) provide a initiation signal to the load drivers/discrete outputs and also requires that two (solenoid) or three (squib initiator) load drivers/discrete outputs individually determine that two-out-of-three controller application processors have sent a signal to initiate the squib initiator. Trip signals are hardwired from the RMU to the equipment actuator. The same logic process is performed for all four divisions. The resulting logic provides single failure proof actuation and single failure proof inadvertent actuation. The four-division, two-out-of-four coincident signal voting occurs simultaneously for the equivalent signals in the four divisions. This arrangement provides multiple, independent trip channels, to accommodate a random single failure. The four divisions are interconnected by fiber-optic communication links via a safety-related fiber-optic communication interface module (CIM). The CIMs provide electrical isolation for data transmission. Subsections 7.1.2, 7.1.3.2, and 7.1.3.3 provide discussions of electrical isolation between divisions.

In summary, at the division level, the four redundant divisions provide a fault-tolerant architecture allowing single division of sensors bypass for on-line maintenance, testing, and repair without losing reliable trip capability. In such a bypass condition, the system automatically defaults to two-out-of-three coincident voting. The fault-tolerant arrangement thus conforms to safety-related system requirements for single failure tolerance, independence, and separation, as required by IEEE Std. 603, Sections 5.1 and 5.6.

The SSLC/ESF does not require operator intervention during normal operation and allows manual bypass under abnormal conditions or required maintenance conditions such as failure of sensors. Safety-related automatic operations are provided with manual switches in each division for equipment initiation. Key safety-related RPS and ESF trip logics are replicated in the DPS, which addresses the common mode failure concern and provides diverse protection of digital computer systems performing safety-related functions. The DPS is described in Section 7.8.

Testing and maintenance activities are supported through use of manual control switches that can activate the trip logic signal of each safety-related system. In addition, on-line self-diagnostic tests checking the safety-related performance of the digital control instruments are performed continuously within SSLC/ESF. An illustration of SSLC/ESF and its relationship with the RPS and other interfacing systems is shown in Figure 7.3-5.

The RPS trip logic and MSIV isolation functions of RTIF use "de-energized-to-trip" and "fail-safe" logic. The SSLC/ESF trip logic uses "energized-to-trip" and "fail-as-is" logic. The isolated SSLC/ESF trip signal is transmitted via load drivers/discrete outputs to the actuators for protective action. The load drivers/discrete outputs are solid-state power switches, directing appropriate currents to devices such as the scram pilot valve solenoids, air-operated valves, and explosive-actuated squib valves. The logic is designed so once it is initiated, the intended sequence of protective actions continues until completion, satisfying the requirement of IEEE Std. 603, Section 5.2.

More detailed descriptions of the SSLC/ESF trip logics for ADS and GDCS initiation are included in Subsection 7.3.1.1.2 and Subsection 7.3.1.2.2.

7.3.5.2.3 Division of Sensors Bypass

Bypassing any single division of sensors is accomplished from each divisional SSLC/ESF cabinet by manual switch control. This bypass disables the DTM outputs of a division at the associated VLU inputs in the four divisions. Interlocks are provided by a four-position joystick-type switch so only one division of sensors at a time can be placed in bypass. When such a bypass is made, all four divisions of two-out-of-four logic become two-out-of-three logic while the bypass is maintained. Bypass permits calibration and repair of sensors or the DTM function. Although all sensors for all systems are bypassed in one division, the remaining three divisions furnish sufficient redundant sensor data for safe operation. The logic is such that all four divisions still can perform two-out-of-four (two-out-of-three) trip decisions - even if sensors are bypassed. Bypass status is

indicated to the operator until the bypass condition is removed. An interlock rejects simultaneous attempts to bypass more than one SSLC/ESF division. Any loss of communication caused by a bypass switch is interpreted as a "no bypass" signal.

7.3.5.2.4 Division Out of Service Bypass

There are no surveillance activities or maintenance activities that require taking the division out of service but bypasses can be used to prevent that division's sensors or logic from contributing to a two-out-of-four trip decision. Bypass status is indicated to the operator until the bypass condition is removed. Only one division can be bypassed at any one time. For the SSLC/ESF logic, because the division of sensors bypass is implemented, and because the logic is implemented with triple redundancy, no additional division trip logic bypass is required. The triply redundant controller application processors send individual initiation commands to the two (solenoid) or three (squib initiator) load drivers/discrete outputs in the RMUs. The load drivers/discrete outputs are wired in series and each must individually determine that two-out-of-three controller application processors have issued an initiation command before the final output is initiated. It is undesirable to perform bypass or maintenance activities with the RMUs electrically connected to the solenoid/squib actuator. The disable/test switch that bypasses the load driver/discrete output actuation for the squib initiators provides the effective bypass function required at the actuator level. (Refer to Figures 7.3-1a and 7.3-1b.)

7.3.5.3 Safety Evaluation

The SSLC/ESF consists of a set of logic processing functions for the ESF systems and therefore is a safety-related system. The functions related to sensor signal processing and trip output are safety-related.

The four separated divisions of logic processing equipment provide the necessary degree of redundancy and independence to maintain safe operation despite the loss of portions of the processing capacity.

The SSLC/ESF system is designed so no single equipment failure causes inability to:

- Perform a reactor trip
- Perform safety-related decay heat removal and reactor pressure control
- Initiate the ESF

Physically separate divisions are established by their relationship with the RPV, which is spatially divided into four quadrants. The sensors, logic, and output actuators of the various systems are allocated to these divisions.

The digital devices in SSLC/ESF are, in general, micro-processor based, software controlled instruments.

Micro-processor based logic in the SSLC/ESF activates the solenoid-controlled SRVs squib-actuated DPVs, GDCS injection and equalizing valves, ICS valves, and SLC squib valves.

A diverse I&C system is incorporated, featuring an independent set of selected reactor trip logic functions and ESF initiation logic functions addressing the requirements of the BTP HICB-19 position. This system is described in Section 7.8. The RPS logic is implemented using a diverse hardware/software platform. The SSLC/ESF system is designed to operate in a mild environment in clean areas within the CB and RB safety envelopes. Refer to Appendix 3H, Subsections 9.4.1 and 9.4.6 for specific environmental conditions.

Panel internal environments are maintained to ensure that reliability goals are achieved. Panel internal cooling is by natural convection. Fans are used to improve long-term reliability, but no credit is taken for forced-air cooling in the qualification of safety-related functions. Thermal design adequacy is considered during detailed equipment design by analysis of heat loads (per circuit module, per bay, and per module).

Table 7.1-1 identifies the SSLC/ESF and the associated codes and standards applied, in accordance with the SRP. This subsection addresses I&C system conformance to regulatory requirements, guidelines, and industry standards.

7.3.5.3.1 Code of Federal Regulations

10 CFR 50.34(f)(1)(v)[II.K.3.13], HPCI and RCIC initiation levels:

- Conformance: The SSLC/ESF design conforms to these requirements.

10 CFR 50.34(f)(2)(iii)[I.D.1], Human factors engineering principles applied to control room design:

- Conformance: The SSLC/ESF design conforms to these requirements.

10 CFR 50.34 (f)(2)(v)[I.D.3], Bypass and operable automatic status indication of safety systems:

- Conformance: The SSLC/ESF complies by providing automatic indication of bypassed and inoperable status.

10 CFR 50.34(f)(2)(viii)[II.B.3], Capability to obtain and analyze samples from the reactor coolant system and containment:

- Conformance: The SSLC/ESF design conforms to these requirements.

10 CFR 50.34(f)(2)(x)[II.D.1], Reactor coolant system relief and safety valves test program requirements:

- Conformance: The SSLC/ESF design conforms to these requirements.

10 CFR 50.34(f)(2)(xi)[II.D.3], Reactor coolant system relief and safety valves position (open or closed) indication requirements:

- Conformance: The SSLC/ESF design conforms to these requirements.

10 CFR 50.34 (f)(2)(xiv)[II.E.4.2], Containment isolation systems requirements:

- Conformance: The SSLC/ESF logic controlling containment isolation functions conforms to these criteria.

10 CFR 50.34(f)(2)(xv)[II.E.4.4], Containment purge/venting system response time and isolation requirements under accident conditions:

- Conformance: The SSLC/ESF design conforms to these requirements.

10 CFR 50.34(f)(2)(xvii)[II.F.1], Accident monitoring instrumentation and control room display requirements:

- Conformance: The SSLC/ESF design conforms to these requirements.

10 CFR 50.34(f)(2)(xviii)[II.F.2], Inadequate core cooling instrumentation and control room indication requirements:

- Conformance: The SSLC/ESF design conforms to these requirements. NBS provides the reactor water level measurement (temperature compensated) inputs to SSLC/ESF. The reactor water level instrumentation errors due to non-condensible gases in instrument reference legs are addressed in Subsection 7.7.1.2.2.

10 CFR 50.34(f)(2)(xix)[II.F.3], Post-core damage accident plant condition monitoring requirements:

- Conformance: The SSLC/ESF design conforms to these requirements.

10 CFR 50.34(f)(2)(xxi)[II.K.1.22], Auxiliary heat removal systems functional requirements under conditions when main feedwater system is not operable:

- Conformance: The SSLC/ESF conforms to these requirements.

10 CFR 50.34 (f)(2)(xxiii)[II.K.2.10], Anticipatory reactor protection system trip requirements under conditions of loss of main feedwater and on turbine trip:

- Conformance: The SSLC/ESF initiates the ICS in response to a Loss of All Feedwater Flow Event. This is an anticipatory trip actuated on a power generation bus loss event.

10 CFR 50.34(f)(2)(xxvii)[III.D.3.3], Monitoring of inplant radiation and airborne radioactivity requirements under a broad range of routine and accident conditions:

- Conformance: The SSLC/ESF design conforms to these requirements.

10 CFR 50.34(f)(2)(xxviii)[III.D.3.4], Control room habitability design requirements due to pathways for radiation and radioactivity under accident conditions:

- Conformance: The SSLC/ESF design conforms to these requirements.

10 CFR 50.43(e), Innovative means of accomplishing safety functions:

- Conformance: When innovative means are used in the I&C design it complies with 10 CFR 50.43(e).

10 CFR 50.44(c)(4), Monitoring requirements for oxygen in containments that use an inerted atmosphere for combustible gas control:

- Conformance: The SSLC/ESF design conforms to these requirements.

10 CFR 50.49, Environmental qualification of electric equipment important to safety for nuclear power plants:

- Conformance: The SSLC/ESF design conforms to these requirements. See Table 3.11-1 (Electrical and Mechanical Equipment for Environmental Qualification).

10 CFR 50.55a(a)(1), Quality standards for systems important to safety:

- Conformance: The SSLC/ESF design conforms to these standards.

10 CFR 50.55a(h), Protection and safety systems compliance with IEEE Std. 603:

- Conformance: The SSLC/ESF design conforms to IEEE Std. 603. Conformance information is found in Subsections 7.1.6.6.1.1 through 7.1.6.6.1.27. Additional information concerning how the SSLC/ESF design conforms to IEEE Std. 603 is discussed below.

- IEEE Std. 603, Section 4.2 (Safety-related Functions): See Subsection 7.3.5.1.
- IEEE Std. 603, Section 4.3 (Permissive Conditions for Operating Bypasses): See Subsections 7.3.5.2.2, 7.3.5.2.3 and 7.3.5.2.4.
- IEEE Std. 603, Section 4.6 (Spatially Dependent Variables): Spatial dependency of monitored variables is not applicable to SSLC/ESF.
- IEEE Std. 603, Section 5.2 (Completion of Protective Actions): See Subsection 7.3.5.2.2.
- IEEE Std. 603, Section 5.7 (Capability for Test and Calibration): See Subsections 7.3.5.2.2 and 7.3.5.4.
- IEEE Std. 603, Sections 6.2 and 7.2 (Manual Control): See Subsection 7.3.5.1.
- IEEE Std. 603, Section 6.4 (Derivation of System Inputs): The SSLC/ESF is a logic processing system only and its sensors are part of other systems.
- IEEE Std. 603, Section 6.5 (Capability of Test and Calibration): See Subsections 7.3.5.2.2 and 7.3.5.4.
- IEEE Std. 603, Sections 6.6 and 7.4 (Operating Bypasses): See Subsections 7.3.5.2.2, 7.3.5.2.3 and 7.3.5.2.4.
- IEEE Std. 603, Sections 6.7 and 7.5 (Maintenance Bypasses): See Subsections 7.3.5.2.2, 7.3.5.2.3 and 7.3.5.2.4.
- IEEE Std. 603, Section 8.2 (Non-Electrical Power Sources): Non-Electrical power sources for the SSLC/ESF are not applicable beyond that discussed in Subsection 7.1.6.6.1.26.
- IEEE Std. 603, Section 8.3 (Maintenance Bypasses): Maintenance bypasses for the SSLC/ESF are not applicable beyond that discussed in Subsection 7.1.6.6.1.27.

10 CFR 50.62, Requirements for reduction of risk from ATWS events for light-water-cooled nuclear power plants:

- Conformance: The SSLC/ESF design conforms to these requirements.

10 CFR 50.63, Loss of all alternating current power:

- Conformance: The SSLC/ESF design conforms to these requirements.

10 CFR 52.47, Contents of applications; technical information, level of design information:

- Conformance: The level of detail provided for the SSLC/ESF within the DCD conforms to this requirement.

10 CFR 52.47(a)(21), Resolution of unresolved and generic (medium- and high-priority) safety issues identified in NUREG-0933:

- Conformance: Resolution of unresolved and generic safety issues is discussed in Section 1.11.

10 CFR 52.47(a)(25), Interface requirements for portions of the plant not within scope of certified design application:

- Conformance: There are no interface requirements for this section.

10 CFR 52.47(b)(1), ITAAC in design certification applications:

- Conformance: ITAAC are provided for the I&C systems and equipment in Tier 1.

10 CFR 52.47(c)(2), Innovative means to accomplish safety function design completeness requirements per 10 CFR 50.43(e):

- Conformance: The I&C design may use innovative means for accomplishing safety functions.

7.3.5.3.2 General Design Criteria

GDC 1, 2, 4, 13, 15, 16, 19, 20, 21, 22, 23, 24, 29, 30, 33, 34, 35, 37, 41, 43, 63 and 64:

- Conformance: The SSLC/ESF design complies with these GDCs.

7.3.5.3.3 Staff Requirements Memoranda

SRM on Item II.Q of SECY-93-087:

- Conformance: The Reactor Trip (Protection) System and ESF designs conform to these criteria in conjunction with the implementation of the DPS as described in Section 7.8.

SRM on Item II.T of SECY 93-087:

- Conformance: The SSLC/ESF VDU design conforms to these criteria for redundancy, independence, and separation in that the "alarm system" is considered redundant as follows:
    - Alarm points are sent via dual networks to redundant data communication processors using dual power supplies. The data communication processors are dedicated to alarm handling.
    - The alarms are displayed on multiple independent VDUs.
    - The alarms are driven by redundant data links to the AMS (dual power).
    - There is one horn and one voice speaker.

7.3.5.3.4 Regulatory Guides

RG 1.22, Periodic Testing of Protection System Actuation Functions:

- Conformance: The SSLC/ESF design complies with the guidance of RG 1.22.

RG 1.45, Reactor Coolant Pressure Boundary Leakage Detection Systems:

- Conformance: The SSLC/ESF design complies with the guidance of RG 1.45.

RG 1.47, Bypassed and Inoperable Status Indication for Nuclear Power Plant Safety Systems:

- Conformance: The SSLC/ESF provides bypass capability and status that complies with RG 1.47.

RG 1.53, Application of the Single Failure Criterion to Safety Systems:

- Conformance: The SSLC/ESF is organized into four physically and electrically-isolated divisions that use the principles of independence and redundancy to conform to the single failure criterion as defined by IEEE Std. 379, Section 4, and IEEE Std. 603, Section 5.1; additionally, the design meets N-2 conditions. Analyses complying with IEEE Std. 379 will be used to confirm the safety-related system designs' conformance to the single failure criterion.

RG 1.62, Manual Initiation of Protective Actions:

- Conformance: The SSLC/ESF design complies with the guidance of RG 1.62. Signals for manual initiation of protective actions are hardwired to the SSLC/ESF equipment.

RG 1.75, Criteria for Independence of Electrical Safety Systems:

- Conformance: The SSLC/ESF design conforms to RG 1.75 as described in Subsections 8.3.1.3 and 8.3.1.4.

RG 1.89, Environmental Qualification of Certain Electric Equipment Important to Safety for Nuclear Power Plants:

- Conformance: The SSLC/ESF design conforms to RG 1.89. See Table 3.11-1 (Electrical and Mechanical Equipment for Environmental Qualification).

RG 1.97, Criteria for Accident Monitoring Instrumentation for Nuclear Power Plants:

- Conformance: The ESBWR I&C conforms to RG 1.97. Specific instruments credited for RG 1.97 compliance are determined as part of the HFE development process as discussed in Section 7.5.

RG 1.100, Seismic Qualification of Electric and Mechanical Equipment for Nuclear Power Plants:

- Conformance: The SSLC/ESF design conforms to RG 1.100. See Sections 3.9 (Mechanical Systems and Components) and 3.10 (Seismic and Dynamic Qualification of Mechanical and Electrical Equipment).

RG 1.105, Setpoints for Safety-Related Instrumentation:

- Conformance: The SSLC/ESF design complies with RG 1.105. Reference 7.3-2 provides detailed description of the GEH setpoint methodology.

RG 1.118, Periodic Testing of Electric Power and Protection Systems:

- Conformance: Periodic testing of the protection systems is performed in accordance with IEEE Std. 338, as modified by RG 1.118. Testing of the SSLC/ESF is performed in conjunction with the Q-DCIS.

RG 1.152, Criteria for Use of Computers in Safety Systems of Nuclear Power Plants:

- Conformance: The SSLC/ESF design conforms to the guidelines of RG 1.152. Additional discussion is provided in Subsection 7.2.1.3 describing RPS system compliance.

RG 1.153, Criteria for Safety Systems:

- Conformance: The SSLC/ESF is designed to satisfy the requirements of IEEE Std. 603, as endorsed by RG 1.153.

RG 1.168, Verification, Validation, Reviews, and Audits for Digital Computer Software Used In Safety Systems of Nuclear Power Plants:

- Conformance: The SSLC/ESF design complies with RG 1.168 as implemented on the SSLC/ESF platform.

RG 1.169, Configuration Management Plans for Digital Computer Software Used in Safety Systems of Nuclear Power Plants:

- Conformance: The SSLC/ESF design complies with RG 1.169 as implemented on the SSLC/ESF platform.

RG 1.170, Software Test Documentation for Digital Computer Software Used in Safety Systems of Nuclear Power Plants:

- Conformance: The SSLC/ESF design complies with RG 1.170 as implemented on the SSLC/ESF platform.

RG 1.171, Software Unit Testing for Digital Computer Software Used in Safety Systems of Nuclear Power Plants:

- Conformance: The SSLC/ESF design complies with RG 1.171 as implemented on the SSLC/ESF platform.

RG 1.172, Software Requirements Specifications for Digital Computer Software Used in Safety Systems of Nuclear Power Plants:

- Conformance: The SSLC/ESF design complies with RG 1.172 as implemented on the SSLC/ESF platform.

RG 1.173, Developing Software Life Cycle Processes for Digital Computer Software Used in Safety Systems of Nuclear Power Plants:

- Conformance: The SSLC/ESF design complies with RG 1.173 as implemented on the SSLC/ESF platform.

RG 1.180, Guidelines for Evaluating Electromagnetic and Radio-Frequency Interference in Safety-Related Instrumentation and Control Systems:

- Conformance: The SSLC/ESF design conforms to RG 1.180. See Table 3.11-1 (Electrical and Mechanical Equipment for Environmental Qualification).

RG 1.204, Guidelines for Lightning Protection of Nuclear Power Plants:

- Conformance: The SSLC/ESF design conforms to RG 1.204.

RG 1.209, Guidelines for Environmental Qualification of Safety-Related Computer-Based Instrumentation and Control Systems in Nuclear Power Plants:

- Conformance: The SSLC/ESF design conforms to RG 1.209. See Table 3.11-1 (Electrical and Mechanical Equipment for Environmental Qualification).

7.3.5.3.5 **Branch Technical Positions**

BTP HICB-1, Guidance on Isolation of Low-Pressure Systems from the High-Pressure Reactor Coolant System:

- Conformance: The SSLC/ESF design complies with BTP HICB-1.

BTP HICB-8, Guidance for Application of Regulatory Guide 1.22:

- Conformance: The SSLC/ESF is fully operational during reactor operation, and is tested in conjunction with the Q-DCIS. Therefore, the SSLC/ESF design complies with BTP HICB-8.

BTP HICB-10, Guidance on Application of Regulatory Guide 1.97:

- Conformance: The ESBWR I&C conforms to RG 1.97. Specific instruments credited for RG 1.97 compliance are determined as part of the HFE development process as discussed in Section 7.5.

BTP HICB-11, Guidance on Application and Qualification of Isolation Devices:

- Conformance: SSLC/ESF logic controllers use safety-related fiber-optic CIMs and fiber-optic cables for interconnections between safety-related divisions for data exchange and for interconnections between safety-related and nonsafety-related devices. The Q-DCIS provides the communication functions for SSLC/ESF. See Subsections 7.1.2, 7.1.3.2 and 7.1.3.3 for descriptions of the Q-DCIS communication system design.

  Portions of RPS and SSLC/ESF may use coil-to-contact isolation of relays or contactors. This is acceptable according to BTP HICB-11 when the application is analyzed or tested in accordance with the guidelines of RG 1.75 and RG 1.153.

BTP HICB-12, Guidance on Establishing and Maintaining Instrument Setpoints:

- Conformance: The SSLC/ESF design conforms to BTP HICB-12. Setpoint implementation is in accordance with Reference 7.3-2.

BTP HICB-14, Guidance on Software Reviews for Digital Computer-Based Instrumentation and Control Systems:

- Conformance: *Development of software for the safety-related system functions within SSLC/ESF conforms to the guidance of BTP HICB-14 as discussed in the LTRs "ESBWR - Software Management Program Manual" (Reference 7.3-3) and "ESBWR - Software Quality Assurance Program Manual" (Reference 7.3-4). Safety-related software to be embedded in the*

memory of the SSLC/ESF controllers is developed according to a structured plan outlined in References 7.3-3 and 7.3-4.

BTP HICB-16, Guidance on the Level of Detail Required for Design Certification Applications Under 10 CFR Part 52:

- Conformance: The level of detail in the SSLC/ESF subsection conforms to BTP HICB-16.

BTP HICB-17, Guidance on Self-Test and Surveillance Test Provisions:

- Conformance: The RPS and SSLC/ESF controller designs conform to BTP HICB-17. Discussions on self-test and surveillance tests of RPS and ESF are provided in Subsections 7.2.3.4 and 7.3.5.4, respectively.

BTP HICB-18, Guidance on the Use of Programmable Logic Controllers in Digital Computer-Based Instrumentation and Control Systems:

- Conformance: Q-DCIS hardware, embedded and operating system software, and peripheral components conform to the guidance of Branch Technical Position HICB-18. The Q-DCIS is built and qualified specifically for ESBWR applications as safety-related and not as commercial grade programmable logic controllers (PLCs). The embedded and operating system software meet the acceptance criteria contained in BTP HICB-14 for safety-related applications.

BTP HICB-19, Guidance for Evaluation of Defense-in-Depth and Diversity in Digital Computer-Based Instrumentation and Control Systems:

- Conformance: SSLC/ESF has a four-division, independent and separated equipment arrangement. Isolation of signal transmission between safety-related divisions and between safety-related and nonsafety-related equipment, is provided by non-conductive fiber-optic cable. System functions are segmented among multiple controllers. Automatic functions are backed up by diverse automatic and manual functions. Control system functions are separate, independent, and diverse from the protection system functions. The RPS logic is implemented using a diverse hardware/software platform. Additional diverse features are discussed in Section 7.8, which specifically addresses compliance with the guidance of BTP HICB-19.

BTP HICB-21, Guidance on Digital Computer Real-Time Performance:

- Conformance: The real-time performance of SSLC/ESF in meeting the requirements for safety-related system trip and initiation response conforms to BTP HICB-21. Each SSLC/ESF controller operates independently and asynchronously with respect to other controllers. The real-time performance of the safety-related control system is deterministic based on the Q-DCIS internal and external communication system design and the SSLC/ESF controller design. Timing signals are not exchanged — neither between divisions of independent equipment, nor between controllers within a division.

7.3.5.4 Testing and Inspection Requirements

A periodic, automatic self-test feature is included to verify proper operation of each SSLC/ESF controller application processor. The self-test is an on-line, continuously operating self-diagnostics function. The on-line self-test operates independently within each of the four SSLC/ESF divisions.

The major purpose of automatic self-testing is improving system availability by checking and confirming transmission path continuity for safety-related signals, verifying operation of each two-out-of-four coincidence trip logic function, and detecting, alarming, and recording the location of hardware or software faults. Tests verify the basic integrity of each card and the micro-processors. Discrete logic cards contain diagnostic circuitry monitoring critical points within the logic configuration and determine whether a discrepancy exists between an expected output and the existing present state. The self-test operations are part of normal data processing and do not affect system response to incoming trip or initiation signals. Automatic initiation signals from plant sensors override automatic test sequences and perform the required safety-related function. Process or logic signals are not changed as a result of self-test.

The self-testing includes continuous error checking of transmitted and received data on the serial data links of each SSLC/ESF controller; for example, error checking by parity check, checksum, or Cyclic Redundancy Checking (CRC) techniques. Self-test failures are indicated to the operator at the MCR console and recorded in a log maintained by the PCF of the N-DCIS.

In-service testing of the SSLC/ESF is performed periodically to verify operability during normal plant operation and to assure that each tested channel can perform its intended design function. The surveillance tests include, as required, instrument channel checks, functional tests, verification of proper sensor and channel calibration, verification of applicable VLU logic functions, and response time tests.

All test features adhere to the single failure criterion so that:

- No single failure in the test circuitry incapacitates an SSLC/ESF safety function.
- No single failure in the test circuitry causes an inadvertent scram, MSIV closure, other primary containment vessel (PCV) isolation, or actuation of any ESF system.

7.3.5.5 Instrumentation and Controls Requirements

The SSLC/ESF equipment uses micro-processor based programmable logic and control instruments, with standardized interchangeable modules. Discrete solid-state logic is also used when applicable.

Control programs for each micro-processor controlled instrument are in the form of software residing in non-volatile memory. The storage medium is in general Programmable Read-Only Memory (PROM). Programs are under the control of a real-time operating system residing in non-volatile memory. The equipment is qualified with a verification and validation program conforming to applicable codes and standards.

The SSLC/ESF component design accommodates electrostatic discharge withstand capability. Administrative controls ensure that the associated channel is bypassed prior to opening any system cabinet. Alternatively, administrative actions consistent with standard electronics electrostatic discharge control practices are required prior to opening a cabinet. These practices implement manufacturer recommendations.

Logic and controls for SSLC/ESF are located on each divisional SSLC/ESF cabinet in the secure Q-DCIS equipment rooms in the CB, with controls and system operating status available on the operator interface section in the MCR. The SSLC/ESF controls are used infrequently. Such controls are available for operator action during plant operation or during accident or transient conditions, and are also used to support testing and maintenance. The SSLC/ESF cabinets are accessible for maintenance and testing. Access to the SSLC/ESF cabinets is administratively controlled. If required, the affected division's sensors are bypassed such that they do not provide trip inputs to other divisions, and the division can be disconnected from its actuators so that its logic remains functional. After maintenance or other access, the affected division's diagnostics, self-testing, and actuator/sensor monitoring confirm correct operation.

The minimum required SSLC/ESF displays provided in the MCR (per division) are:

- Division of sensors in bypass,
- SSLC/ESF controller inoperative (DTM or VLU), and
- Communication Interface Module (CIM) inoperative.

7.3.6 Containment System Wetwell-to-Drywell Vacuum Breaker Isolation Function

The Vacuum Breaker Isolation Function (VBIF) is an independent control platform that, upon detection of excessive vacuum breaker (VB) leakage, prevents the loss of long-term containment integrity. Figures 7.1-1 and 7.3-5 indicate VBIF interfaces.

7.3.6.1 System Design Bases

The wetwell-to-drywell VB isolation function has the following safety-related requirements:

- Automatically isolates an excessively leaking VB using a VB isolation valve.
- The VB and VB isolation valve are qualified for a harsh environment inside the drywell.
- Manual opening and closing of a VB isolation valve is provided for in the design.
- No single control logic and instrumentation failure opens/closes more than one VB isolation valve.
- VB and VB isolation valve positions are displayed in the MCR.
- The safety-related function is met with one VB/VB isolation valve path isolated together with any active identifiable single failure.

- Divisional instruments performing VB isolation valve logic are powered by the associated safety-related divisional power supplies.
- Containment system VB isolation function logic controllers are independent.

7.3.6.2 System Description

The wetwell-to-drywell VB isolation function comprises ICPs, three sets of VBs, and three sets of VB isolation valves. A more detailed description is given in Subsection 6.2.1.1.2.

- Automatic Operation
  - Closure of the VB isolation valve is performed automatically, without need for operator action, once excessive bypass leakage through a VB is detected.
  - Automatic actuation logic is performed by a control system with components similar to those used in the ATWS/SLC control system. These components are an independent Q-DCIS subsystem.
  - Each VB/VB isolation valve pair has dedicated sensors and logic. Each VB isolation valve operates independently of the other VB isolation valves according to input received from its sensors. Logic is processed for each individual isolation valve; failure of the logic for one isolation valve does not affect the logic for any other isolation valve.
- Manual Operation
  - Manual controls are available to the operator in the MCR to:
    - Open each VB isolation valve
    - Close each VB isolation valve
  - Manual controls are independent for each VB isolation valve and are hardwired to the same hardware as the VB isolation valve automatic control logic.
- Actuation Logic
  - The primary closure demand for the VB isolation valve is based upon a temperature differential between the drywell and wetwell and upon the bypass status of the associated division of logic. A separate LOCA temperature value also is provided to the logic.
  - A secondary closure demand signal is based upon a temperature differential between the drywell and wetwell and upon VB position. A separate LOCA temperature value also is provided to the logic.
  - Manual control over each VB isolation valve is available to the operator.
  - Logic for each VB isolation valve is controlled by 16 thermocouples (four groups of four) and four proximity switches. Each of the four thermocouples in each group is assigned

to a separate division. Each of the four groups provides temperature values for separate drywell and wetwell locations.

- Proximity switches on each VB body give positive indication of fully open or fully closed positions.
- The thermocouples are located in the:
  - Wetwell (on or adjacent to the VB debris screen).
  - Wetwell cavity (in the pipe cavity between the VB isolation valve and the end of the VB penetration on the wetwell side).
  - Drywell (1) (on or near the outlet of the VB).
  - Drywell (2) (inside the drywell separate from the VB/VB isolation valve assembly).
- Each VB isolation function ATWS/SLC division can be placed into manual bypass status that is automatically indicated in the MCR.

7.3.6.3 Safety Evaluation

Section 6.2 evaluates the VB isolation function and shows that for the entire range of nuclear process system pipe break sizes, the opening of a single VB ensures containment structure functional integrity.

Table 7.1-1 identifies the VB isolation function and the associated codes and standards applied, in accordance with the SRP. This subsection addresses I&C systems conformance to regulatory requirements, guidelines, and industry standards.

7.3.6.3.1 Code of Federal Regulations

10 CFR 50.34(f)(2)(iii)[I.D.1], Human factors engineering principles applied to control room design:

- Conformance: The VB isolation function design conforms to these requirements.

10 CFR 50.34(f)(2)(v)[I.D.3], Bypass and operable automatic status indication of safety systems:

- Conformance: The VB isolation function conforms to these requirements.

10 CFR 50.43(e), Innovative means of accomplishing safety functions:

- Conformance: When innovative means are used in the I&C design it complies with 10 CFR 50.43(e).

10 CFR 50.49, Environmental qualification of electric equipment important to safety for nuclear power plants:

- Conformance: The VB isolation function conforms to these requirements. See Table 3.11-1 (Electrical and Mechanical Equipment for Environmental Qualification).

10 CFR 50.55a(a)(1), Quality standards for systems important to safety:

- Conformance: The VB isolation function conforms to this requirement for the use of the applicable these standards.

10 CFR 50.55a(h), Protection and safety systems compliance with IEEE Std. 603:

- Conformance: The VB isolation function conforms to IEEE Std. 603. Conformance information is found in Subsections 7.1.6.6.1.1 through 7.1.6.6.1.27. Additional information concerning how the VB isolation function conforms to IEEE Std. 603 is discussed below.
  - IEEE Std. 603, Section 4.2 (Safety-Related Function): See Subsection 7.3.6.1.
  - IEEE Std. 603, Section 4.3 (Permissive Conditions for Operating Bypasses): Permissive conditions for operating bypasses are not applicable for the VB isolation function.
  - IEEE Std. 603, Section 4.6 (Spatially Dependent Variables): See the Actuation Logic section of Subsections 7.3.6.2 and 6.2.1.1.5.5.1.
  - IEEE Std. 603, Section 5.2 (Completion of Protective Actions): Completion of protective actions is not applicable beyond that discussed in Subsection 7.1.6.6.1.3.
  - IEEE Std. 603, Section 5.7 (Capability for Test and Calibration): See Subsection 7.3.6.4.
  - IEEE Std. 603, Sections 6.2 and 7.2 (Manual Control): See Subsections 7.3.6.1 and 7.3.6.2.
  - IEEE Std. 603, Section 6.4 (Derivation of System Inputs): Derivation of system inputs for the VB isolation function are not applicable beyond that discussed in Subsection 7.1.6.6.1.20.
  - IEEE Std. 603, Section 6.5 (Capability of Test and Calibration): See Subsection 7.3.6.4.
  - IEEE Std. 603, Sections 6.6 and 7.4 (Operating Bypasses): Operating bypasses for the VB isolation function are not applicable beyond that discussed in Subsection 7.1.6.6.1.22.
  - IEEE Std. 603, Sections 6.7 and 7.5 (Maintenance Bypasses): Maintenance Bypasses for the VB isolation function are not applicable beyond that discussed in Subsection 7.1.6.6.1.23.
  - IEEE Std. 603, Section 8.2 (Non-Electrical Power Sources): Non-Electrical power sources for the VB isolation function are not applicable beyond that discussed in Subsection 7.1.6.6.1.26.
  - IEEE Std. 603, Section 8.3 (Maintenance Bypasses): Maintenance bypasses for the VB isolation function are not applicable beyond that discussed in Subsection 7.1.6.6.1.27.

10 CFR 52.47, Contents of applications; technical information, level of design information:

- Conformance: The level of detail provided for the design of the VB and VB isolation function within the DCD conforms to this requirement.

10 CFR 52.47(a)(21), Resolution of unresolved and generic (medium- and high-priority) safety issues identified in NUREG-0933:

- Conformance: Resolution of unresolved and generic safety issues is discussed in Section 1.11.

10 CFR 52.47(a)(25), Interface requirements for portions of the plant not within scope of certified design application:

- Conformance: There are no interface requirements for this section.

10 CFR 52.47(b)(1), ITAAC in design certification application:

- Conformance: ITAAC are provided for the I&C systems and equipment in Tier 1.

10 CFR 52.47(c)(2), Innovative means to accomplish safety function design completeness requirements per 10 CFR 50.43(e):

- Conformance: The I&C design may use innovative means for accomplishing safety-related functions.

7.3.6.3.2 General Design Criteria

GDC 1, 2, 4, 13, 16, 19, 20, 21, 22, 23, 24 and 29:

- Conformance: The VB isolation function design complies with these GDCs.

7.3.6.3.3 Staff Requirements Memoranda

SRM on Item II.Q of SECY 93-087:

- Conformance: The VB isolation function design conforms to these criteria through demonstration that no postulated common-mode failure of the control system could disable the VB isolation function. The discrete logic and solid state controls used in this design are not subject to these vulnerabilities.

7.3.6.3.4 Regulatory Guides

RG 1.22, Periodic Testing of Protection System Actuation Functions:

- Conformance: The VB isolation function design conforms to RG 1.22. System logic and components are tested periodically during refueling outages.

RG 1.47, Bypassed and Inoperable Status Indication for Nuclear Power Plant Safety Systems:

- Conformance: The VB isolation function design conforms to RG 1.47. Automatic indication is provided in the MCR to inform the operator that the system is inoperable or a division is bypassed.

RG 1.53, Application of the Single Failure Criterion to Safety Systems:

- Conformance: The VB isolation function is organized into four physically and electrically-isolated divisions that use the principles of independence and redundancy to

conform to the single failure criterion as defined by IEEE Std. 379, Section 4, and IEEE Std. 603, Section 5.1; additionally, the design meets N-2 conditions. Analyses complying with IEEE Std. 379 will be used to confirm the safety-related system designs' conformance to the single failure criterion.

RG 1.62, Manual Initiation of Protective Actions:

- Conformance: The VB isolation function design complies with RG 1.62. Each division has a manual actuation switch in the MCR. Initiation of the system requires actuation of two switches to ensure that manual initiation is a deliberate act.

RG 1.75, Criteria for Independence of Electrical Safety Systems:

- Conformance: The VB isolation function design conforms to RG 1.75 as described in Subsections 8.3.1.3 and 8.3.1.4.

RG 1.89, Environmental Qualification of Certain Electric Equipment Important to Safety for Nuclear Power Plants:

- Conformance: The VB isolation function design conforms to RG 1.89. See Table 3.11-1 (Electrical and Mechanical Equipment for Environmental Qualification).

RG 1.97, Criteria for Accident Monitoring Instrumentation for Nuclear Power Plants:

- Conformance: The ESBWR I&C conforms to RG 1.97. Specific instruments credited for RG 1.97 compliance are determined as part of the HFE development process as discussed in Section 7.5.

RG 1.100, Seismic Qualification of Electric and Mechanical Equipment for Nuclear Power Plants:

- Conformance: The VB isolation function design conforms to RG 1.100. See Sections 3.9 (Mechanical Systems and Components) and 3.10 (Seismic and Dynamic Qualification of Mechanical and Electrical Equipment).

RG 1.105, Setpoints for Safety-Related Instrumentation:

- Conformance: The setpoints established to control the VB isolation valve conform to RG 1.105. Reference 7.3-2 provides a detailed description of the GEH methodology.

RG 1.118, Periodic Testing of Electric Power and Protection Systems:

- Conformance: Periodic testing of the protection systems is performed in accordance with IEEE Std. 338, as modified by RG 1.118.

RG 1.152, Criteria for Use of Computers in Safety Systems of Nuclear Power Plants:

- Conformance: The VB isolation function design conforms to RG 1.152.

RG 1.153, Criteria for Safety Systems:

- Conformance: The VB isolation function is designed to satisfy the requirements of IEEE Std. 603, as endorsed by RG 1.153.

RG 1.168, Verification, Validation, Reviews, and Audits for Digital Computer Software Used in Safety Systems of Nuclear Power Plants:

- Conformance: The VB isolation function design conforms to RG 1.168 as implemented on the independent control platform.

RG 1.169, Configuration Management Plans for Digital Computer Software Used in Safety Systems of Nuclear Power Plants:

- Conformance: The VB isolation function design conforms to RG 1.169 as implemented on the independent control platform.

RG 1.170, Software Test Documentation for Digital Computer Software Used in Safety Systems of Nuclear Power Plants:

- Conformance: The VB isolation function design conforms to RG 1.170 as implemented on the independent control platform.

RG 1.171, Software Unit Testing for Digital Computer Software Used in Safety Systems of Nuclear Power Plants:

- Conformance: The VB isolation function design conforms to RG 1.171 as implemented on the independent control platform.

RG 1.172, Software Requirements Specifications for Digital Computer Software Used in Safety Systems of Nuclear Power Plants:

- Conformance: The VB isolation function design conforms to RG 1.172 as implemented on the independent control platform.

RG 1.173, Developing Software Life Cycle Processes for Digital Computer Software Used in Safety Systems of Nuclear Power Plants:

- Conformance: The VB isolation function design conforms to RG 1.173 as implemented on the independent control platform.

RG 1.180, Guidelines for Evaluating Electromagnetic and Radio-Frequency Interference in Safety-Related Instrumentation and Control Systems:

- Conformance: The VB isolation function design conforms to RG 1.180. See Table 3.11-1 (Electrical and Mechanical Equipment for Environmental Qualification).

RG 1.204, Guidelines for Lightning Protection of Nuclear Power Plants:

- Conformance: The VB isolation function design conforms to RG 1.204.

RG 1.209, Guidelines for Environmental Qualification of Safety-Related Computer-Based Instrumentation and Control Systems in Nuclear Power Plants:

- Conformance: The VB isolation function design conforms to RG 1.209. See Table 3.11-1 (Electrical and Mechanical Equipment for Environmental Qualification).

7.3.6.3.5 Branch Technical Positions

In accordance with the SRP for Section 7.3 and Table 7.1-1, the following BTPs are addressed for the VB isolation function:

BTP HICB-8, Guidance for Application of Regulatory Guide 1.22:

- Conformance: The VB isolation function design conforms to BTP HICB-8.

BTP HICB-10, Guidance on Application of Regulatory Guide 1.97:

- Conformance: The ESBWR I&C conforms to RG 1.97. Specific instruments credited for RG 1.97 compliance are determined as part of the HFE development process as discussed in Section 7.5.

BTP HICB-11, Guidance on Application and Qualification of Isolation Devices:

- Conformance: Logic controllers for the VB isolation function use safety-related fiber-optic CIMs and fiber-optic cables for interconnections between safety-related divisions for data exchange and for interconnections between safety-related and nonsafety-related devices.

BTP HICB-12, Guidance on Establishing and Maintaining Instrument Setpoints:

- Conformance: The setpoints established to control the VB isolation valve conform to this guide. Reference 7.3-2 provides a detailed description of the GEH methodology.

BTP HICB-14, Guidance on Software Reviews for Digital Computer-Based Instrumentation and Control Systems:

- Conformance: The VB isolation function design conforms to BTP HICB-14.

BTP HICB-16, Guidance on the Level of Detail Required for Design Certification Applications Under 10 CFR Part 52:

- Conformance: The level of detail in the VB isolation function description conforms to BTP HICB-16.

BTP HICB-17, Guidance on Self-Test and Surveillance Test Provisions:

- Conformance: The VB isolation function design conforms to BTP HICB-17.

BTP HICB-18, Guidance on the Use of Programmable Logic Controllers in Digital Computer-Based Instrumentation and Control Systems:

- Conformance: Q-DCIS hardware, embedded and operating system software, and peripheral components conform to the guidance of Branch Technical Position HICB-18. Q-DCIS is built and qualified specifically for ESBWR applications as safety-related and not as commercial

grade PLCs. The embedded and operating system software meet the acceptance criteria contained in BTP HICB-14, for safety-related applications.

BTP HICB-19, Guidance for Evaluation of Defense-in-Depth and Diversity in Digital Computer-Based Instrumentation and Control Systems:

- Conformance: The VB isolation function design conforms to BTP HICB-19. The discrete logic and solid state controls used in this design are not subject to the vulnerabilities described by BTP HICB-19.

BTP HICB-21, Guidance on Digital Computer Real-Time Performance:

- Conformance: The VB isolation function design conforms to BTP HICB-21.

7.3.6.3.6 Three Mile Island Action Plan Requirements

In accordance with the SRP for 7.3 and with Table 7.1-1, 10 CFR 50.34(f)(2)(v)[I.D.3] applies to the VB isolation function. The VB isolation function complies with the requirements as indicated above. TMI action plan requirements are addressed in Appendix 1A.

7.3.6.4 Testing and Inspection Requirements

The VB isolation function TLUs are self-tested continually at preset intervals and can be tested during plant operation. VB isolation function equipment is tested during reactor operation to support VB Isolation Valve stroke testing as specified in Table 3.9-8 and Subsection 6.2.1.1.5. Refer to Subsection 6.2.1.1.5 for a discussion of mechanical tests performed on the VB isolation functions.

7.3.6.5 Instrumentation and Control Requirements

The performance and effectiveness of the VB isolation function in a postulated accident is verified by observing the following MCR indications (additional discussion on the VB isolation function instrumentation is contained in Subsection 7.3.6.1 and in Subsection 6.2.1.1.5):

- Status indication of VB position
- Status indication of VB isolation valve position
- Drywell and wetwell pressure indication
- Drywell and wetwell temperature indications
- VB isolation valve bypass status
- Status indication of bypass leakage

The VB isolation function instrumentation located in the drywell is designed to operate in the harsh drywell environment that results from a LOCA. Safety-related instruments, located outside the drywell, are qualified for the environment in which they must perform their safety-related function.

7.3.7 ICS DPV Isolation Function

The ICS DPV isolation function which is implemented in the ICP prevents the loss of long-term containment integrity upon detection of DPV open position. Figures 7.1-1 and 7.3-5 indicate ICS DPV isolation function interfaces.

7.3.7.1 System Design Bases

The ICS DPV isolation function has the following safety-related requirements:

- Automatically isolates all Isolation Condensers by closing the two steam admission isolation valves to each of the ICs.
- The two steam admission isolation valves per IC are qualified for a harsh environment inside the drywell.
- Manual opening and closing of the IC steam admission isolation valves is provided for in the design.
- No single control logic and instrumentation failure opens/closes more than one IC steam admission isolation valve.
- IC steam admission isolation valve positions are displayed in the MCR.
- The safety-related function is met with one IC steam admission valve path isolated together with any active identifiable single failure.
- Divisional instruments performing IC steam admission valve isolation valve logic are powered by the associated safety-related divisional power supplies.
- ICS DPV isolation function logic controllers are independent.

7.3.7.2 System Description

The ICS DPV isolation function comprises ICPs and four pair of steam admission isolation valves (two per IC). A more detailed description is given in Subsection 5.4.6.

- Automatic Operation
    - Closure of the IC steam admission isolation valves are performed automatically, without need for operator action, once DPV position signals representing two or more open DPVs are detected.
    - Automatic actuation logic is performed by a control system with components similar to those used in the ATWS/SLC control system. These components are an independent Q-DCIS subsystem.
    - Each IC steam admission isolation valve has dedicated logic. Each IC steam admission isolation valve actuator operates independently of the other IC steam admission isolation valves according to input received from the DPV position sensors. Logic is

processed for each individual isolation valve; failure of the logic for one isolation valve does not affect the logic for any other isolation valve.

- Manual Operation
  - Manual controls are available to the operator to:
    - Open each IC steam admission isolation valve (this logic is contained in SSLC/ESF)
    - Close each IC steam admission isolation valve
  - Manual controls are independent for each IC steam admission isolation valve and are hardwired to the same hardware as the IC steam admission isolation valve automatic control logic.
- Actuation Logic
  - The primary ICP closure demand for the IC steam admission isolation valve is based upon detection of two or more DPV valves open position signals and upon the bypass status of the associated division of logic.
  - Other IC steam admission isolation valve closure demand signals are originated with SSLC/ESF logic using different isolation valve actuators.
  - Manual control over each IC steam admission isolation valve is available to the operator.
  - Logic for each IC steam admission isolation valve is controlled by separate position switches on each DPV (one switch per division per DPV). Each DPV position is available to each of the four divisional ICPs whose logic will initiate the isolation when any two DPVs are open.
  - Additional and separate position switches per DPV are used for the four divisions of SSLC/ESF isolation logic.
  - Each ICS DPV isolation function ICP division can be placed into manual sensor bypass status that is automatically indicated in the MCR.

7.3.7.3 Safety Evaluation

Section 5.4.6.1 and Reference 5.4-3 evaluate the IC steam admission isolation valve isolation function and indicates that closing the ICS isolation valves when the RPV is depressurized mitigates the accumulation of radiolytic hydrogen and oxygen.

Table 7.1-1 identifies the ICS DPV isolation function and the associated codes and standards applied, in accordance with the SRP. This subsection addresses I&C systems conformance to regulatory requirements, guidelines, and industry standards.

7.3.7.3.1 Code of Federal Regulations

10 CFR 50.34(f)(2)(iii)[I.D.1], Human factors engineering principles applied to control room design:

- Conformance: The ICS DPV isolation function design conforms to these requirements.

10 CFR 50.34(f)(2)(v)[I.D.3], Bypass and operable automatic status indication of safety systems:

- Conformance: The ICS DPV isolation function conforms to these requirements.

10 CFR 50.34(f)(2)(xxi)[II.K.1.22], Auxiliary heat removal systems functional requirements under conditions when main feedwater system is not operable:

- Conformance: The ICS DPV isolation function conforms to these requirements.

10 CFR 50.43(e), Innovative means of accomplishing safety functions:

- Conformance: When innovative means are used in the I&C design it complies with 10 CFR 50.43(e).

10 CFR 50.49, Environmental qualification of electric equipment important to safety for nuclear power plants:

- Conformance: The ICS DPV isolation function conforms to these requirements. See Table 3.11-1 (Electrical and Mechanical Equipment for Environmental Qualification).

10 CFR 50.55a(a)(1), Quality standards for systems important to safety:

- Conformance: The ICS DPV isolation function conforms to this requirement for the use of the applicable these standards.

10 CFR 50.55a(h), Protection and safety systems compliance with IEEE Std. 603:

- Conformance: The ICS DPV isolation function conforms to IEEE Std. 603. Conformance information is found in Subsections 7.1.6.6.1.1 through 7.1.6.6.1.27. Additional information concerning how the ICS DPV isolation function conforms to IEEE Std. 603 is discussed below.
    - IEEE Std. 603, Section 4.2 (Safety-Related Function): See Subsection 7.3.7.1.
    - IEEE Std. 603, Section 4.3 (Permissive Conditions for Operating Bypasses): Permissive conditions for operating bypasses are not applicable for the ICS DPV isolation function.
    - IEEE Std. 603, Section 4.6 (Spatially Dependent Variables): See the Actuation Logic section of Subsections 7.3.7.2 and 6.2.1.1.5.5.1.
    - IEEE Std. 603, Section 5.2 (Completion of Protective Actions): Completion of protective actions is not applicable beyond that discussed in Subsection 7.1.6.6.1.3.
    - IEEE Std. 603, Section 5.7 (Capability for Test and Calibration): See Subsection 7.3.7.4.
    - IEEE Std. 603, Sections 6.2 and 7.2 (Manual Control): See Subsections 7.3.7.1 and 7.3.6.2.
    - IEEE Std. 603, Section 6.4 (Derivation of System Inputs): Derivation of system inputs for the ICS DPV isolation function are not applicable beyond that discussed in Subsection 7.1.6.6.1.20.
    - IEEE Std. 603, Section 6.5 (Capability of Test and Calibration): See Subsection 7.3.7.4.

- IEEE Std. 603, Sections 6.6 and 7.4 (Operating Bypasses): Operating bypasses for the ICS DPV isolation function are not applicable beyond that discussed in Subsection 7.1.6.6.1.22.
- IEEE Std. 603, Sections 6.7 and 7.5 (Maintenance Bypasses): Maintenance Bypasses for the ICS DPV isolation function are not applicable beyond that discussed in Subsection 7.1.6.6.1.23.
- IEEE Std. 603, Section 8.2 (Non-Electrical Power Sources): Non-Electrical power sources for the ICS DPV isolation function are not applicable beyond that discussed in Subsection 7.1.6.6.1.26.
- IEEE Std. 603, Section 8.3 (Maintenance Bypasses): Maintenance bypasses for the ICS DPV isolation function are not applicable beyond that discussed in Subsection 7.1.6.6.1.27.

10 CFR 52.47, Contents of applications; technical information, level of design information:

- Conformance: The level of detail provided for the design for the IC isolation valves and the ICS DPV isolation function within the DCD conforms to this requirement.

10 CFR 52.47(a)(21), Resolution of unresolved and generic (medium- and high-priority) safety issues identified in NUREG-0933:

- Conformance: Resolution of unresolved and generic safety issues is discussed in Section 1.11.

10 CFR 52.47(a)(25), Interface requirements for portions of the plant not within scope of certified design application:

- Conformance: There are no interface requirements for this section.

10 CFR 52.47(b)(1), ITAAC in design certification application:

- Conformance: ITAAC are provided for the I&C systems and equipment in Tier 1.

10 CFR 52.47(c)(2), Innovative means to accomplish safety function design completeness requirements per 10 CFR 50.43(e):

- Conformance: The I&C design may use innovative means for accomplishing safety-related functions.

7.3.7.3.2 General Design Criteria

GDC 1, 2, 4, 13, 16, 19, 20, 21, 22, 23, 24 and 29, 33, 24, 35, 37 and 44:

- Conformance: The ICS DPV isolation function design complies with these GDCs.

7.3.7.3.3 Staff Requirements Memoranda

SRM on Item II.Q of SECY 93-087:

- Conformance: The IC steam admission valve isolation function design conforms to these criteria through demonstration that no postulated common-mode failure of the control system could disable the IC steam admission valve isolation function. The discrete logic and solid state controls used in this design are not subject to these vulnerabilities.

7.3.7.3.4 **Regulatory Guides**

RG 1.22, Periodic Testing of Protection System Actuation Functions:

- Conformance: The IC steam admission valve isolation function design conforms to RG 1.22. System logic and components are tested periodically during refueling outages.

RG 1.47, Bypassed and Inoperable Status Indication for Nuclear Power Plant Safety Systems:

- Conformance: The IC steam admission valve isolation function design conforms to RG 1.47. Automatic indication is provided in the MCR to inform the operator that the system is inoperable or a division is bypassed.

RG 1.53, Application of the Single Failure Criterion to Safety Systems:

- Conformance: The IC steam admission valve isolation function is organized into four physically and electrically-isolated divisions that use the principles of independence and redundancy to conform to the single failure criterion as defined by IEEE Std. 379, Section 4, and IEEE Std. 603, Section 5.1; additionally, the design meets N-2 conditions. Analyses complying with IEEE Std. 379 will be used to confirm the safety-related system designs' conformance to the single failure criterion.

RG 1.62, Manual Initiation of Protective Actions:

- Conformance: The IC steam admission valve isolation function design complies with RG 1.62. Each division has a manual actuation switch. Initiation of the system requires actuation of two switches to ensure that manual initiation is a deliberate act.

RG 1.75, Criteria for Independence of Electrical Safety Systems:

- Conformance: The IC steam admission valve isolation function design conforms to RG 1.75 as described in Subsections 8.3.1.3 and 8.3.1.4.

RG 1.89, Environmental Qualification of Certain Electric Equipment Important to Safety for Nuclear Power Plants:

- Conformance: The IC steam admission valve isolation function design conforms to RG 1.89. See Table 3.11-1 (Electrical and Mechanical Equipment for Environmental Qualification).

RG 1.97, Criteria for Accident Monitoring Instrumentation for Nuclear Power Plants:

- Conformance: The ESBWR I&C conforms to RG 1.97. Specific instruments credited for RG 1.97 compliance are determined as part of the HFE development process as discussed in Section 7.5.

RG 1.100, Seismic Qualification of Electric and Mechanical Equipment for Nuclear Power Plants:

- Conformance: The IC steam admission valve isolation function design conforms to RG 1.100. See Sections 3.9 (Mechanical Systems and Components) and 3.10 (Seismic and Dynamic Qualification of Mechanical and Electrical Equipment).

RG 1.105, Setpoints for Safety-Related Instrumentation:

- Conformance: The setpoints established to control the IC steam admission valve conform to RG 1.105. Reference 7.3-2 provides a detailed description of the GEH methodology.

RG 1.118, Periodic Testing of Electric Power and Protection Systems:

- Conformance: Periodic testing of the protection systems is performed in accordance with IEEE Std. 338, as modified by RG 1.118.

RG 1.152, Criteria for Use of Computers in Safety Systems of Nuclear Power Plants:

- Conformance: The IC steam admission valve isolation function design conforms to RG 1.152.

RG 1.153, Criteria for Safety Systems:

- Conformance: The IC steam admission valve isolation function is designed to satisfy the requirements of IEEE Std. 603, as endorsed by RG 1.153.

RG 1.168, Verification, Validation, Reviews, and Audits for Digital Computer Software Used in Safety Systems of Nuclear Power Plants:

- Conformance: The IC steam admission valve isolation function design conforms to RG 1.168 as implemented on the independent control platform.

RG 1.169, Configuration Management Plans for Digital Computer Software Used in Safety Systems of Nuclear Power Plants:

- Conformance: The IC steam admission valve isolation function design conforms to RG 1.169 as implemented on the independent control platform.

RG 1.170, Software Test Documentation for Digital Computer Software Used in Safety Systems of Nuclear Power Plants:

- Conformance: The IC steam admission valve isolation function design conforms to RG 1.170 as implemented on the independent control platform.

RG 1.171, Software Unit Testing for Digital Computer Software Used in Safety Systems of Nuclear Power Plants:

- Conformance: The ICS DPV isolation function design conforms to RG 1.171 as implemented on the independent control platform.

RG 1.172, Software Requirements Specifications for Digital Computer Software Used in Safety Systems of Nuclear Power Plants:

- Conformance: The IC steam admission valve isolation function design conforms to RG 1.172 as implemented on the independent control platform.

RG 1.173, Developing Software Life Cycle Processes for Digital Computer Software Used in Safety Systems of Nuclear Power Plants:

- Conformance: The IC steam admission valve isolation function design conforms to RG 1.173 as implemented on the independent control platform.

RG 1.180, Guidelines for Evaluating Electromagnetic and Radio-Frequency Interference in Safety-Related Instrumentation and Control Systems:

- Conformance: The IC steam admission valve isolation function design conforms to RG 1.180. See Table 3.11-1 (Electrical and Mechanical Equipment for Environmental Qualification).

RG 1.204, Guidelines for Lightning Protection of Nuclear Power Plants:

- Conformance: The IC steam admission valve isolation function design conforms to RG 1.204.

RG 1.209, Guidelines for Environmental Qualification of Safety-Related Computer-Based Instrumentation and Control Systems in Nuclear Power Plants:

- Conformance: The IC steam admission valve isolation function design conforms to RG 1.209. See Table 3.11-1 (Electrical and Mechanical Equipment for Environmental Qualification).

7.3.7.3.5 Branch Technical Positions

In accordance with the SRP for Section 7.3 and Table 7.1-1, the following BTPs are addressed for the ICS DPV isolation function:

BTP HICB-8, Guidance for Application of Regulatory Guide 1.22:

- Conformance: The IC steam admission valve isolation function design conforms to BTP HICB-8.

BTP HICB-10, Guidance on Application of Regulatory Guide 1.97:

- Conformance: The ESBWR I&C conforms to RG 1.97. Specific instruments credited for RG 1.97 compliance are determined as part of the HFE development process as discussed in Section 7.5.

BTP HICB-11, Guidance on Application and Qualification of Isolation Devices:

- Conformance: Logic controllers for the IC steam admission valve isolation function use safety-related fiber-optic CIMs and fiber-optic cables for interconnections between safety-related divisions for data exchange and for interconnections between safety-related and nonsafety-related devices.

BTP HICB-12, Guidance on Establishing and Maintaining Instrument Setpoints:

- Conformance: The setpoints established to control the IC steam admission isolation valve conform to this guide. Reference 7.3-2 provides a detailed description of the GEH methodology.

BTP HICB-14, Guidance on Software Reviews for Digital Computer-Based Instrumentation and Control Systems:

- Conformance: The IC steam admission valve isolation function design conforms to BTP HICB-14.

BTP HICB-16, Guidance on the Level of Detail Required for Design Certification Applications Under 10 CFR Part 52:

- Conformance: The level of detail in the IC steam admission valve isolation function description conforms to BTP HICB-16.

BTP HICB-17, Guidance on Self-Test and Surveillance Test Provisions:

- Conformance: The ICS DPV isolation function design conforms to BTP HICB-17.

BTP HICB-18, Guidance on the Use of Programmable Logic Controllers in Digital Computer-Based Instrumentation and Control Systems:

- Conformance: Q-DCIS hardware, embedded and operating system software, and peripheral components conform to the guidance of Branch Technical Position HICB-18. Q-DCIS is built and qualified specifically for ESBWR applications as safety-related and not as commercial grade PLCs. The embedded and operating system software meet the acceptance criteria contained in BTP HICB-14, for safety-related applications.

BTP HICB-19, Guidance for Evaluation of Defense-in-Depth and Diversity in Digital Computer-Based Instrumentation and Control Systems:

- Conformance: The ICS DPV isolation function design conforms to BTP HICB-19. The discrete logic and solid state controls used in this design are not subject to the vulnerabilities described by BTP HICB-19.

BTP HICB-21, Guidance on Digital Computer Real-Time Performance:

- Conformance: The ICS DPV isolation function design conforms to BTP HICB-21.

7.3.7.3.6 Three Mile Island Action Plan Requirements

In accordance with the SRP for 7.3 and with Table 7.1-1, 10 CFR 50.34(f)(2)(v)[I.D.3] applies to the ICS DPV isolation function. The ICS DPV isolation function complies with the requirements as indicated above. TMI action plan requirements are addressed in Appendix 1A.

7.3.7.4 Testing and Inspection Requirements

The ICS DPV isolation function TLUs are self-tested continually at preset intervals and can be tested during plant operation. ICS DPV isolation function equipment is tested during reactor

operation to support IC steam admission isolation valve stroke testing as specified in Table 3.9-8 and Subsection 5.4.6.4.

7.3.7.5 Instrumentation and Control Requirements

The performance and effectiveness of the ICS DPV isolation function in a postulated accident is verified by observing the following MCR indications (additional discussion on the ICS DPV isolation function instrumentation is contained in Subsection 7.3.7.1 and in Subsection 5.4.6):

- Status indication of the IC steam admission isolation valve position
- DPV position indication
- ICS DPV isolation function bypass status

The ICS DPV isolation function instrumentation located in the drywell is designed to operate in the harsh drywell environment that results from a LOCA. Safety-related instruments, located outside the drywell, are qualified for the environment in which they must perform their safety-related function.

7.3.8 COL Information

None.

7.3.9 References

7.3-1 (Deleted)

7.3-2 GE Hitachi Nuclear Energy, "GEH ESBWR Setpoint Methodology," NEDE-33304P, Class III (Proprietary), Revision 4, May 2010, and NEDO-33304, Class II (Non-proprietary), Revision 4, May 2010.

7.3-3 GE Hitachi Nuclear Energy, "ESBWR - Software Management Program Manual," NEDE-33226P, Class III (Proprietary), Revision5, February 2010, and NEDO-33226, Class I (Non-proprietary), Revision 5, February 2010.

7.3-4 GE Hitachi Nuclear Energy, "ESBWR - Software Quality Assurance Program Manual," NEDE-33245P, Class III (Proprietary), Revision 5, February 2010, and NEDO-33245, Class I (Non-proprietary), Revision 5, February 2010.

7.3-5 (Deleted)

Table 7.3-1 Automatic Depressurization System Parameters

Parameter	Value
Number of ADS divisions	4
Controller application processor redundancy per division	3
Number of load drivers/discrete outputs within a division used to actuate the separate solenoid-operated gas pilots on each SRV	2
Number of load drivers/discrete outputs within a division used to actuate the separate igniter circuits on each squib-actuated DPV	3
Minimum number of ADS logic divisions to actuate any SRV pilot and open the SRV	2
Minimum number of ADS logic divisions to actuate (energize) one of the igniter circuits and open the DPV	2
(Deleted)	

Table 7.3-2 Safety Relief Valve Initiation Parameters

Parameter	Value[1]
Number of SRV groups	2
Number of SRVs in the first group (Group 1-initial ADS start signal)	5
Number of SRVs in the second group (Group 2 – second ADS start signal)	5
Time delay to a sustained RPV Level 1 signal	10 sec
Time delay to a sustained Drywell Pressure High signal	60 min
Time after a sustained RPV Level 1 signal or a sustained Drywell Pressure High signal before signaling Group 1 SRVs to open	0 sec
Time after a sustained RPV Level 1 signal or a sustained Drywell Pressure High Level signal before signaling Group 2 SRVs to open	10 sec

Note:

1. The time delay values represent design or analytical limits.

Table 7.3-3 Automatic Depressurization Valve Parameters

Parameter	Value[1]
Number of DPVs groups	4
Number of DPVs in Group 1 (third ADS start signal)	3
Number of DPVs in Group 2 (fourth ADS start signal)	2
Number of DPVs in Group 3 (fifth ADS start signal)	2
Number of DPVs in Group 4 (sixth ADS start signal)	1
Initial ADS time delay, after a sustained RPV Level 1 signal or sustained Drywell Pressure High signal, before Group 1 DPVs are signaled to open	50 sec
Additional ADS time delay, after Group 1 initiation, before Group 2 DPVs are signaled to open	50 sec
Additional ADS time delay, after Group 2 initiation, before Group 3 DPVs are signaled to open	50 sec
Additional ADS time delay, after Group 3 initiation, before Group 4 DPVs are signaled to open	50 sec

Note:

1. The time delay values represent design or analytical limits.

Table 7.3-4 Gravity Driven Cooling System Parameters

Parameter	Value[1]
Deluge squib valves initiated by lower drywell high temperature	>538°C (1000°F)
GDCS Injection squib valve logic time delay after a sustained (10 seconds) RPV Level 1 or a sustained (60 minutes) Drywell Pressure High signal	150 sec
GDCS Equalization line squib valve initiation logic time delay after a sustained (10 seconds) RPV Level 1 signal and only after the RPV water level decreases below RPV Level 0.5 (1m above TAF)	30 min
Manual GDCS equalization squib valve initiation logic time delay after a sustained RPV Water Level 1 signal	30 min
Manual GDCS injection squib valve initiation logic time delay after low RPV pressure permissive signal	30 min

Note:

1. These values represent design or analytical limits.

Table 7.3-5 LD&IS Interfacing Sensor Parameters

Temperatures:

- Main Steam Line (MSL) Tunnel Area
- Drywell
- MSL Turbine Area
- RWCU/SDC rooms

Pressures:

- MSL Turbine Inlet
- Main Condenser
- RPV Head Flange Seal Leakage
- Drywell
- Feedwater Line Differential

Radiation Levels:

- RCCWS Intersystem Leakage
- Drywell Fission Product
- RBVS Air Exhaust
- Refueling Handling Area Vent Exhaust
- Isolation Condensers Pool Vent Discharge

Flow Rates:

- MSL Steam
- RWCU/SDC Differential Mass (Temperature Compensated)
- Drywell Air Cooler Condensate Discharge
- Isolation Condenser Steam
- Isolation Condenser Condensate Return

Levels:

- RPV Water Level 0.5, Level 1, Level 2, Level 8, and Level 9
- Drywell drain Sump
- Containment Sump
- Drywell Water

Figure 7.3-1a SRV Initiation Logics

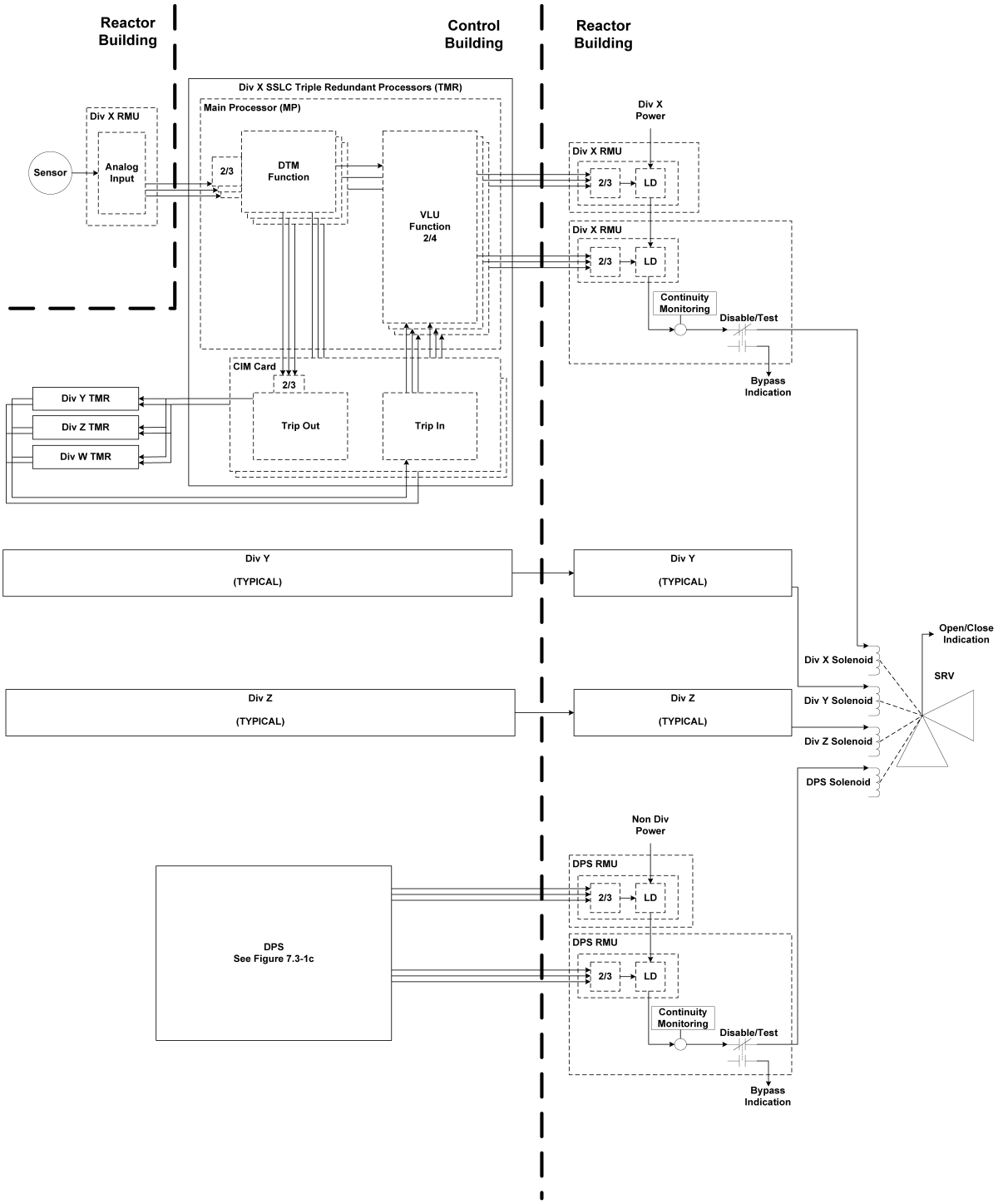

Figure 7.3-1b GDCS and DPV Initiation Logics

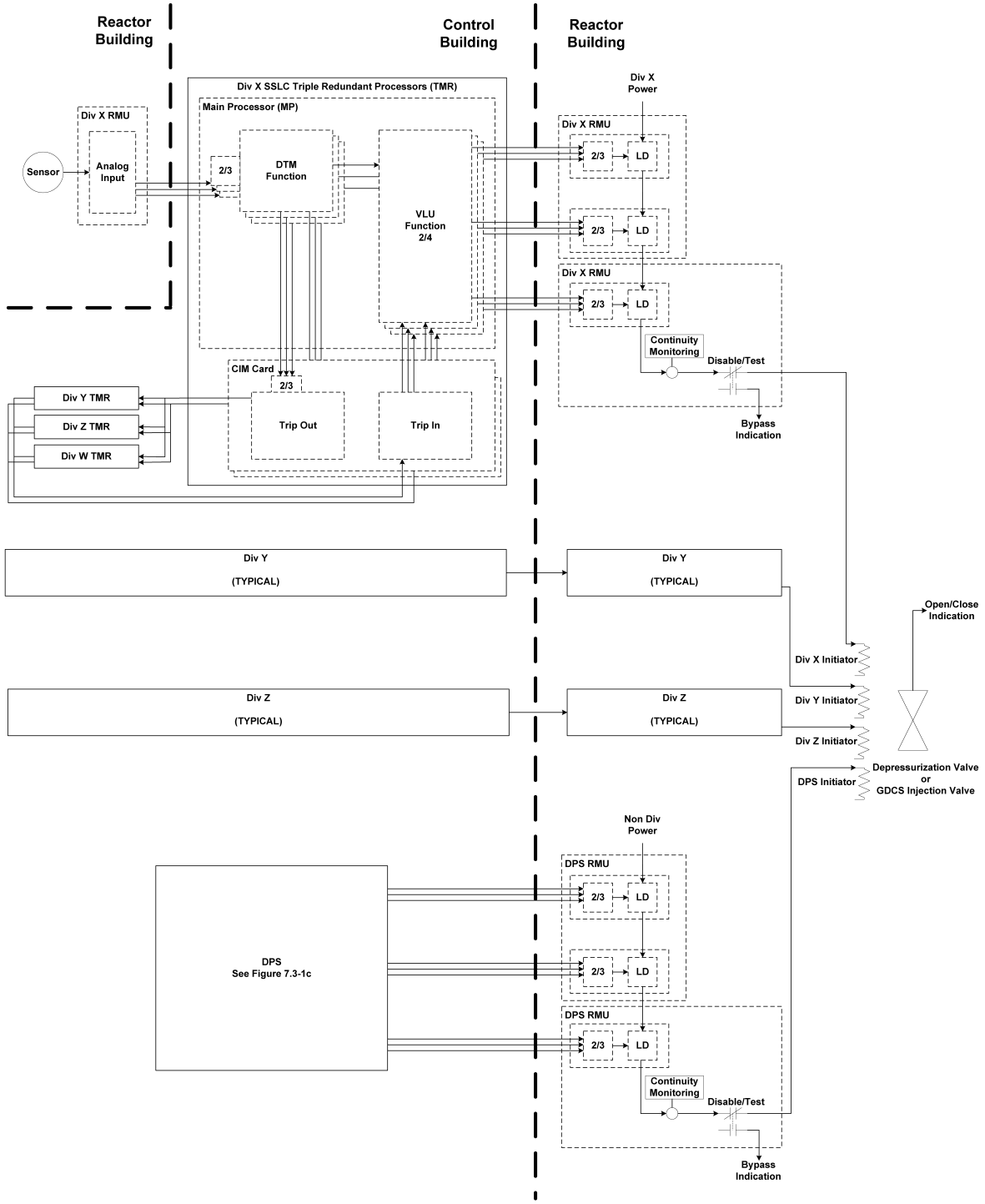

Figure 7.3-1c DPS Initiation Logic

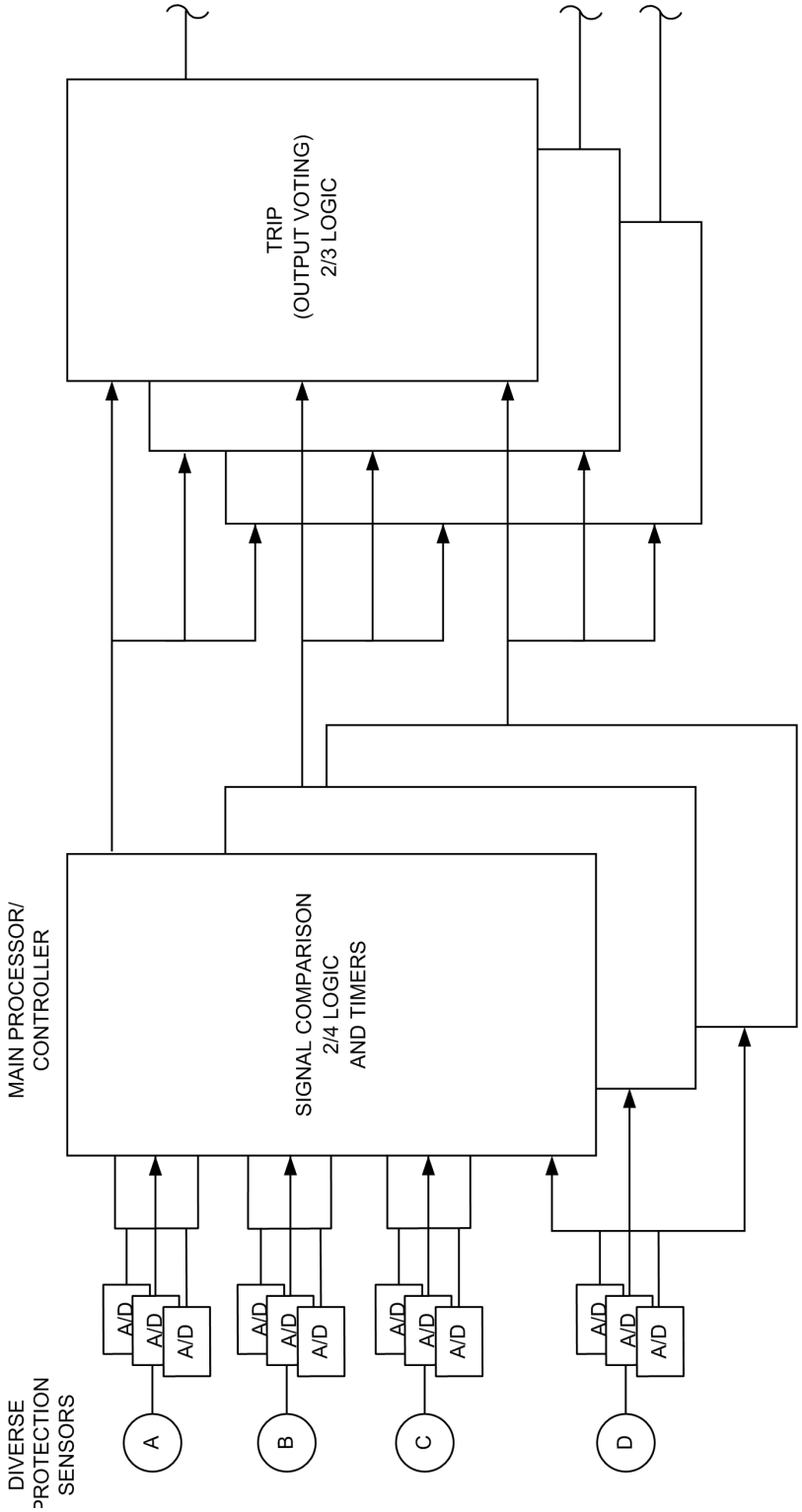

Figure 7.3-2 GDCS Equalizing Valve Initiation Logics

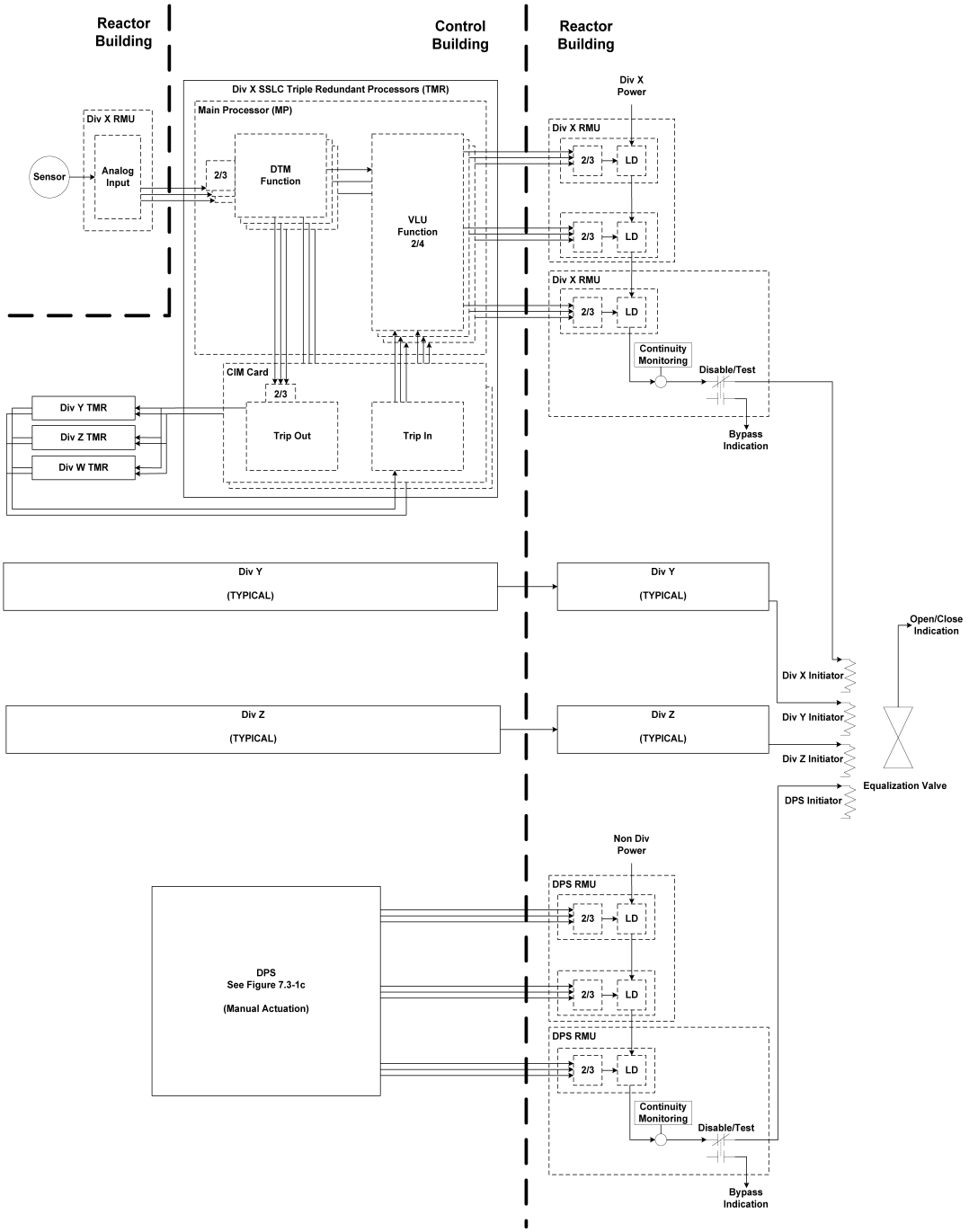

Figure 7.3-3 LD&IS System Design Configuration

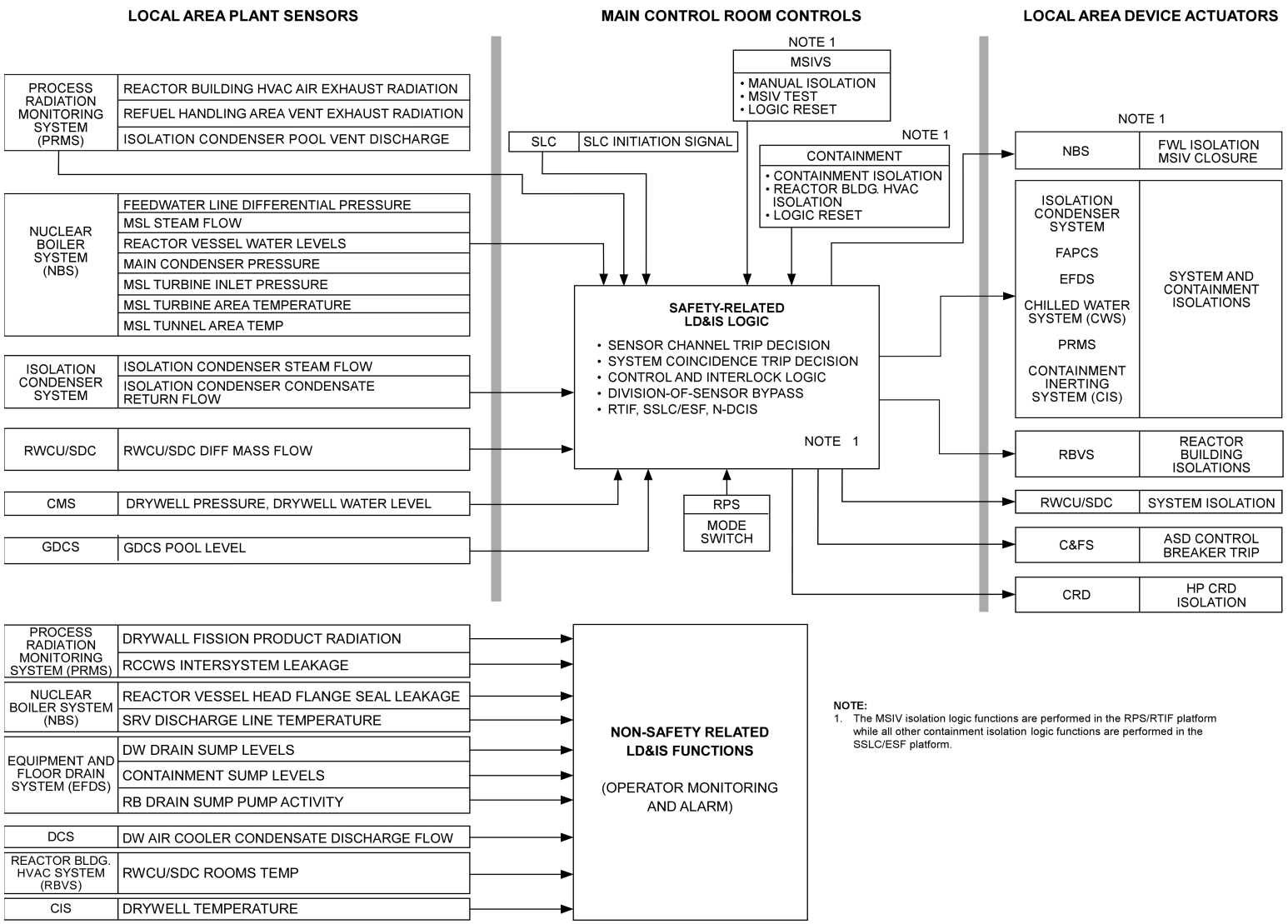

Figure 7.3-4 SSLC/ESF Simplified Functional Block Diagram

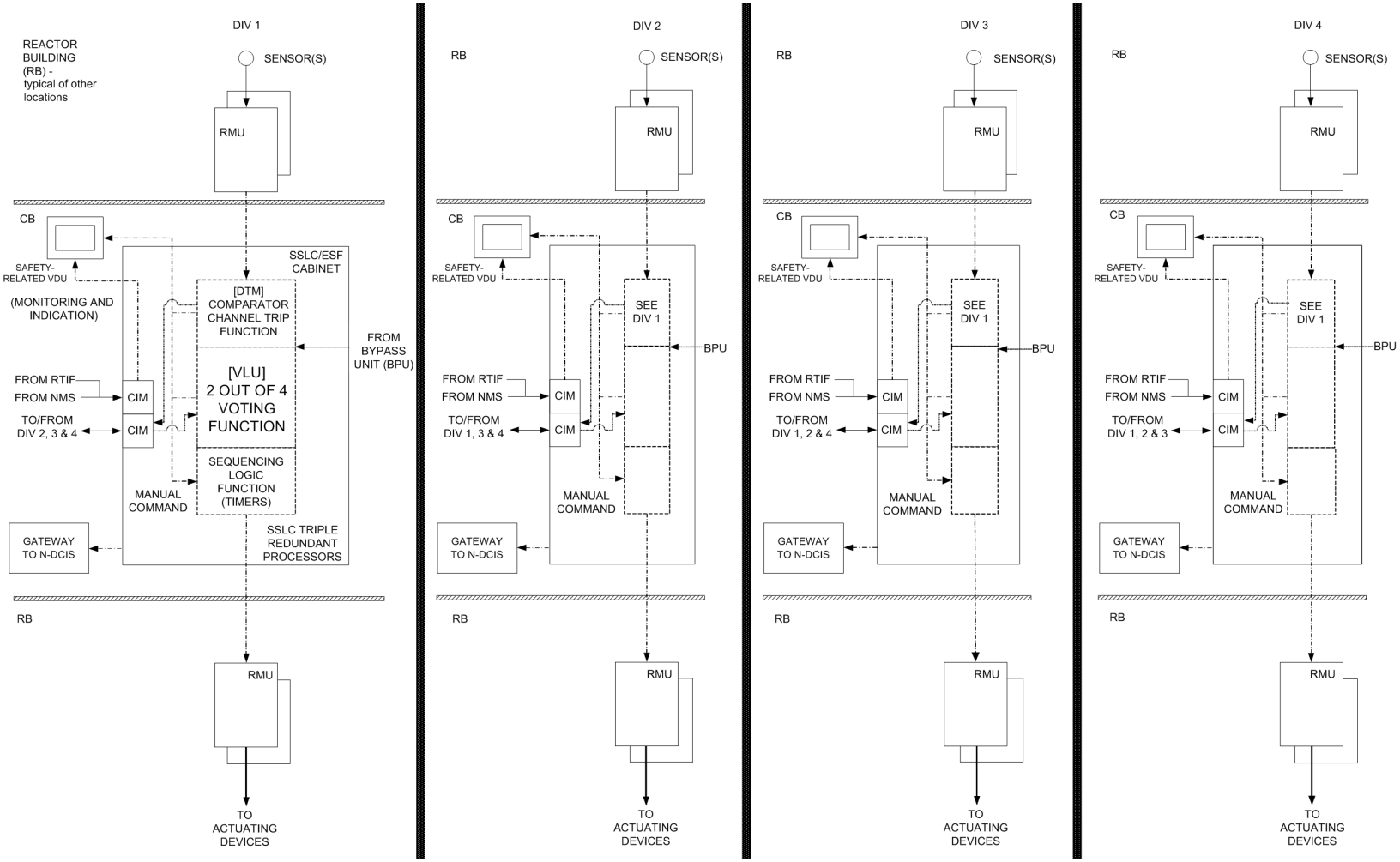

NOTES:
Redundant DIV 1 and 2 VDUs are located at the Remote Shutdown Panels
CIM=COMMUNICATION INTERFACE MODULE-ISOLATOR

(Note: the VLU contains dual redundant 2/4 logics with two independent trip outputs.)

Figure 7.3-5 SSLC/ESF System Interface Diagram

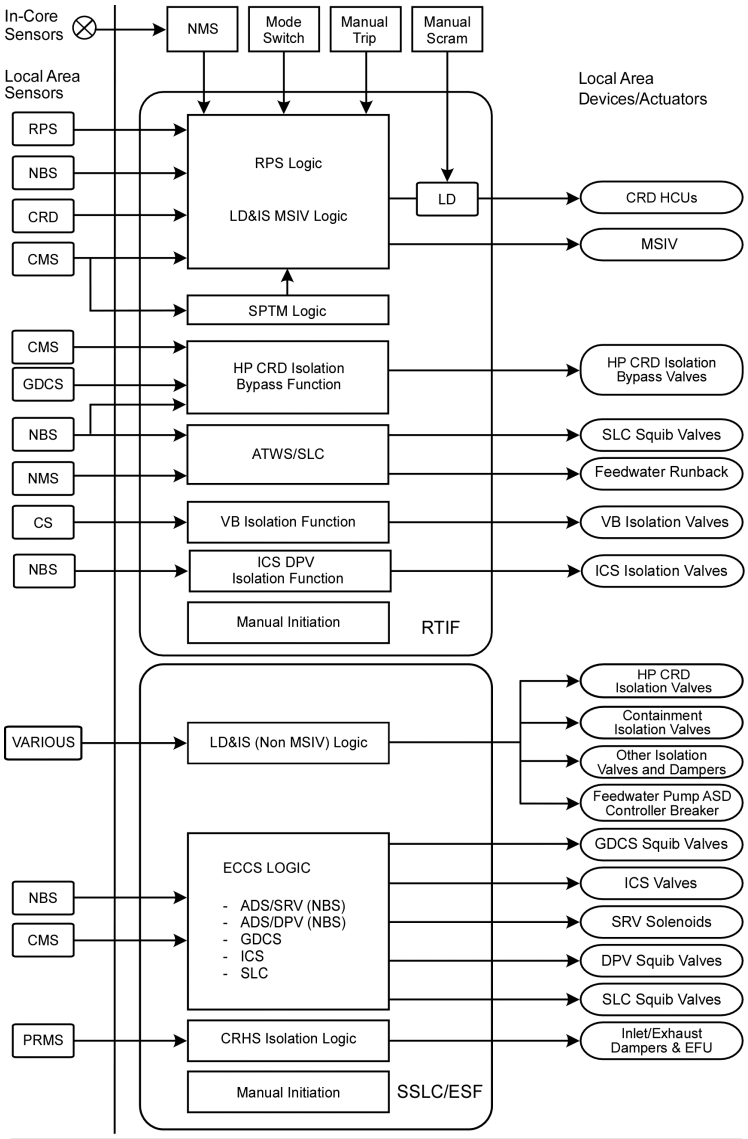

Notes: 1) Local area sensors include:

RPS:	Turbine stop valve position, turbine CV oil pressure, turbine bypass valve position, main condenser pressure and loss of power generation bus
PRMS:	Process radiation - control room inlet ventilation
NBS:	MSIV position (for RTIF only), RPV pressure, water level
CRD:	Scram accumulator charging water header pressure
CMS:	Drywell pressure, drywell level, suppression pool temperature
HP CRD	High Pressure Control Rod Drive System
CS:	(Containment System) wetwell and drywell temperature, Vacuum Breaker (VB) and VB isolation valve position

2) Manual scram interrupts power to the LD circuit
3) LD&IS MSIV isolation logic shares RTIF sensors. LD&IS non-MSIV isolation logic shares SSLC/ESF sensors.
4) The various LD&IS sensors and functions are depicted on Figure 7.3-3
5) Space consideration may dictate locating the ICP hardware in separate cabinets.

Figure 7.3-6 SSLC/ESF Division 1 Layout

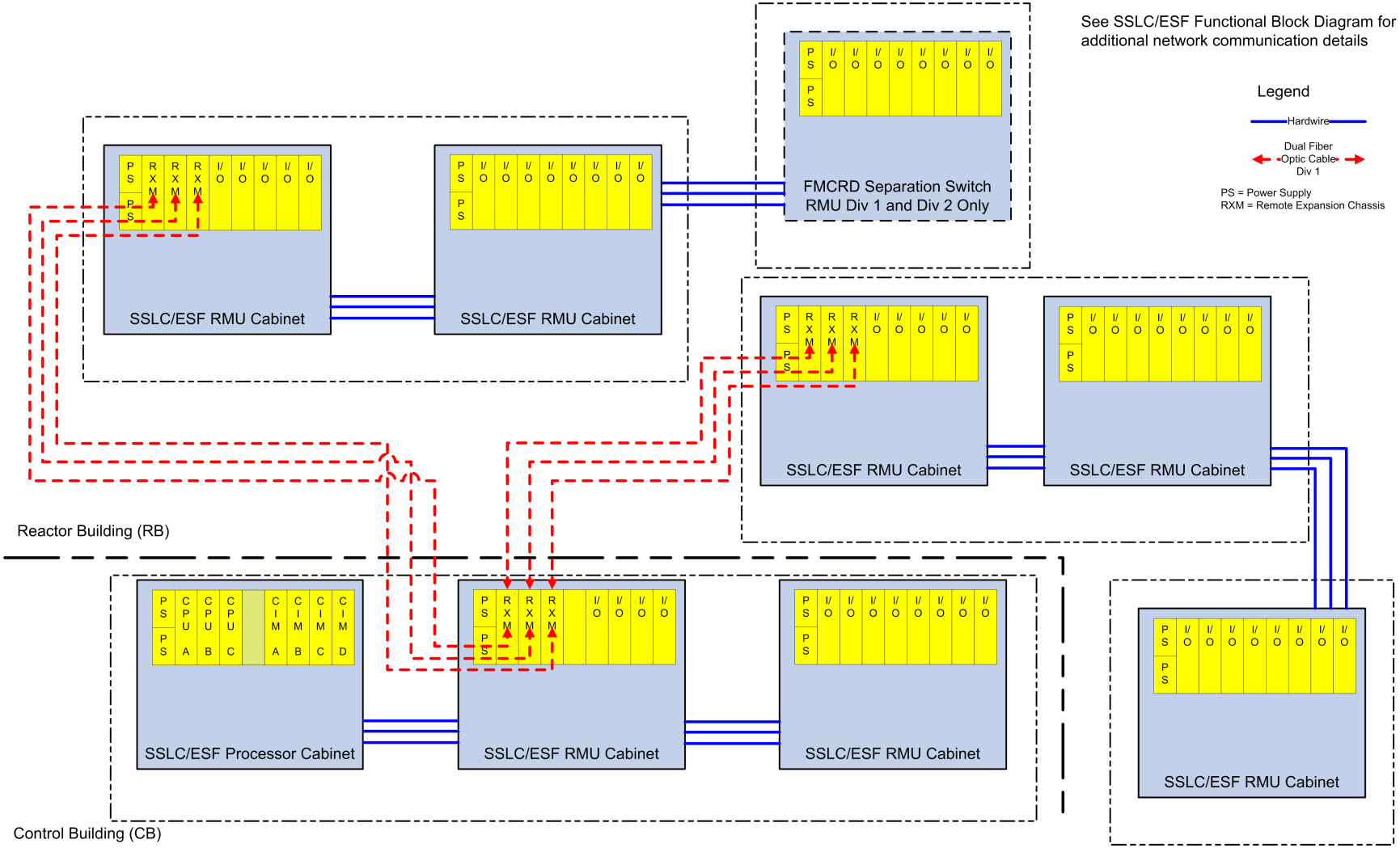

Figure 7.3-7 SSLC/ESF Simplified Functional Block Diagram

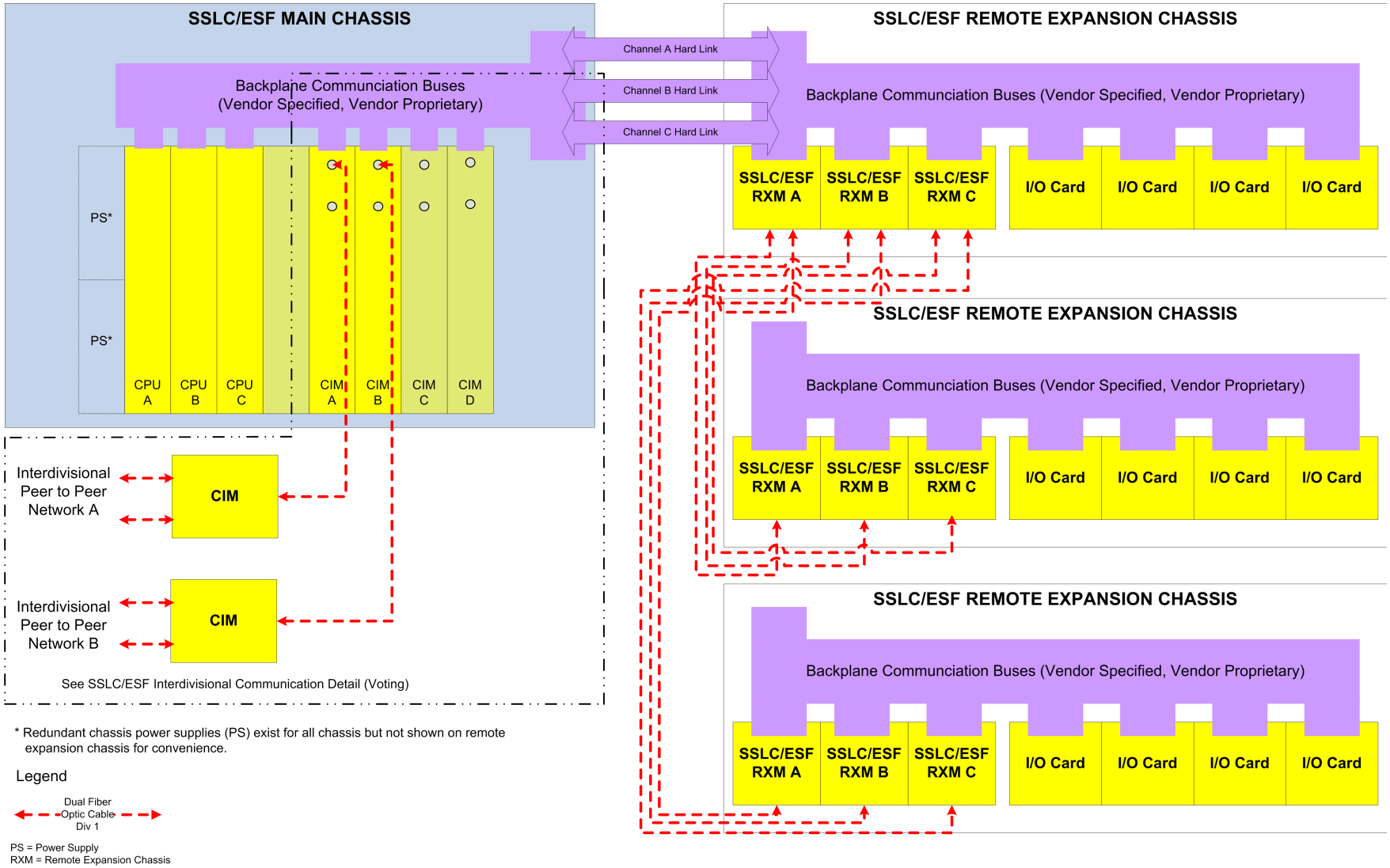

Figure 7.3-8 SSLC/ESF Inter-divisional Communication Detail

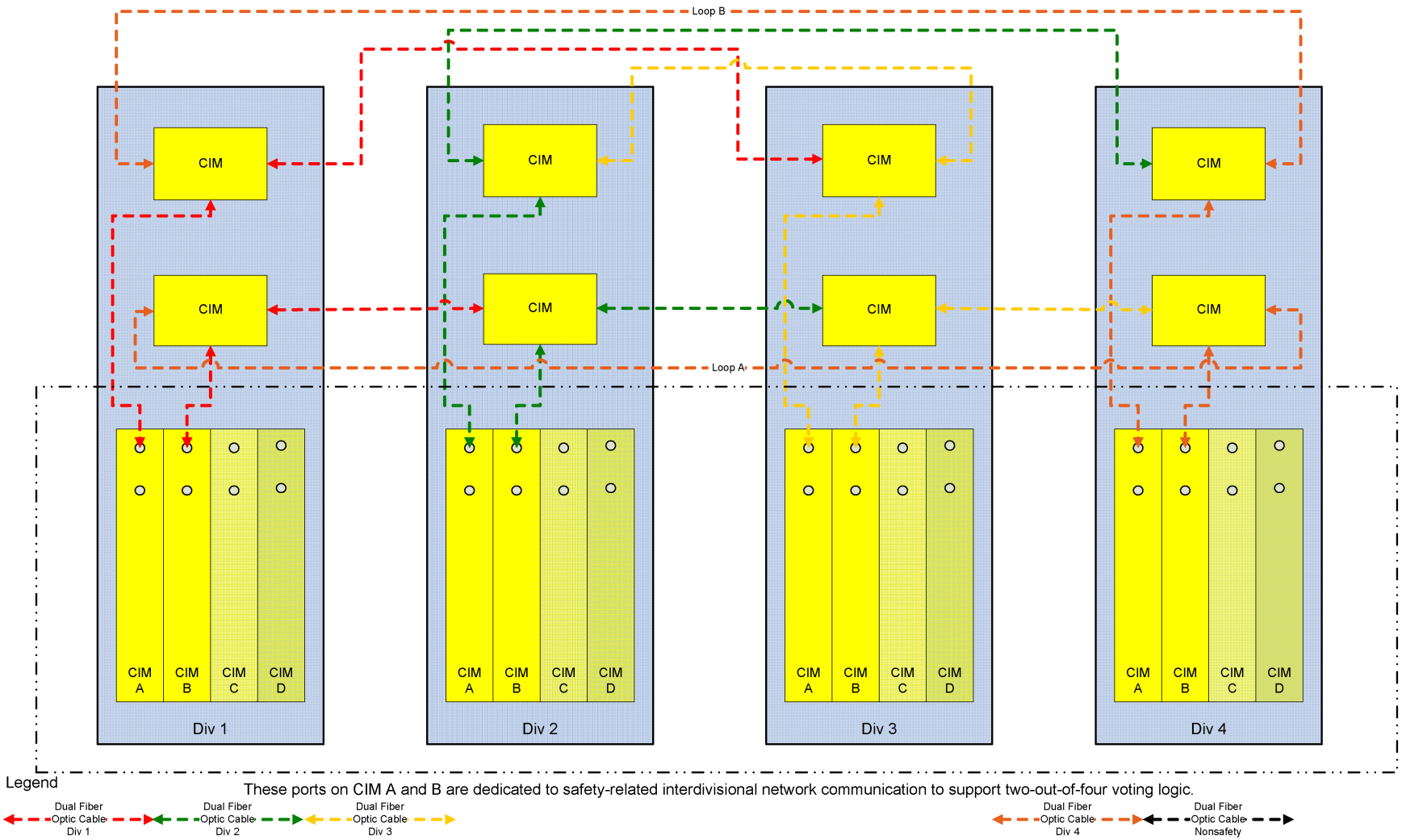

Figure 7.3-9 SSLC/ESF Safety-Related VDU Communication Detail

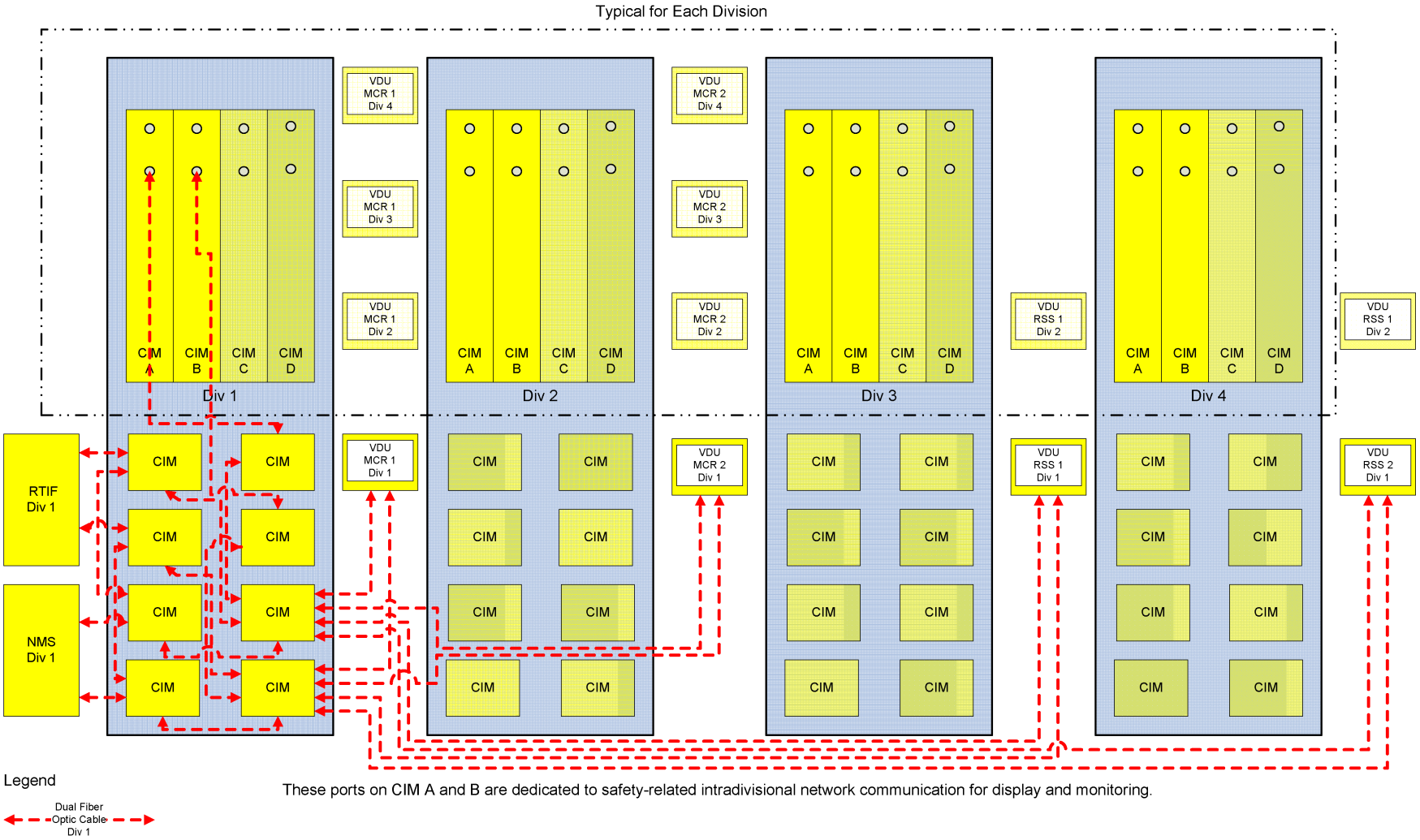

Figure 7.3-10 SSLC/ESF Nonsafety-Related Communication Detail

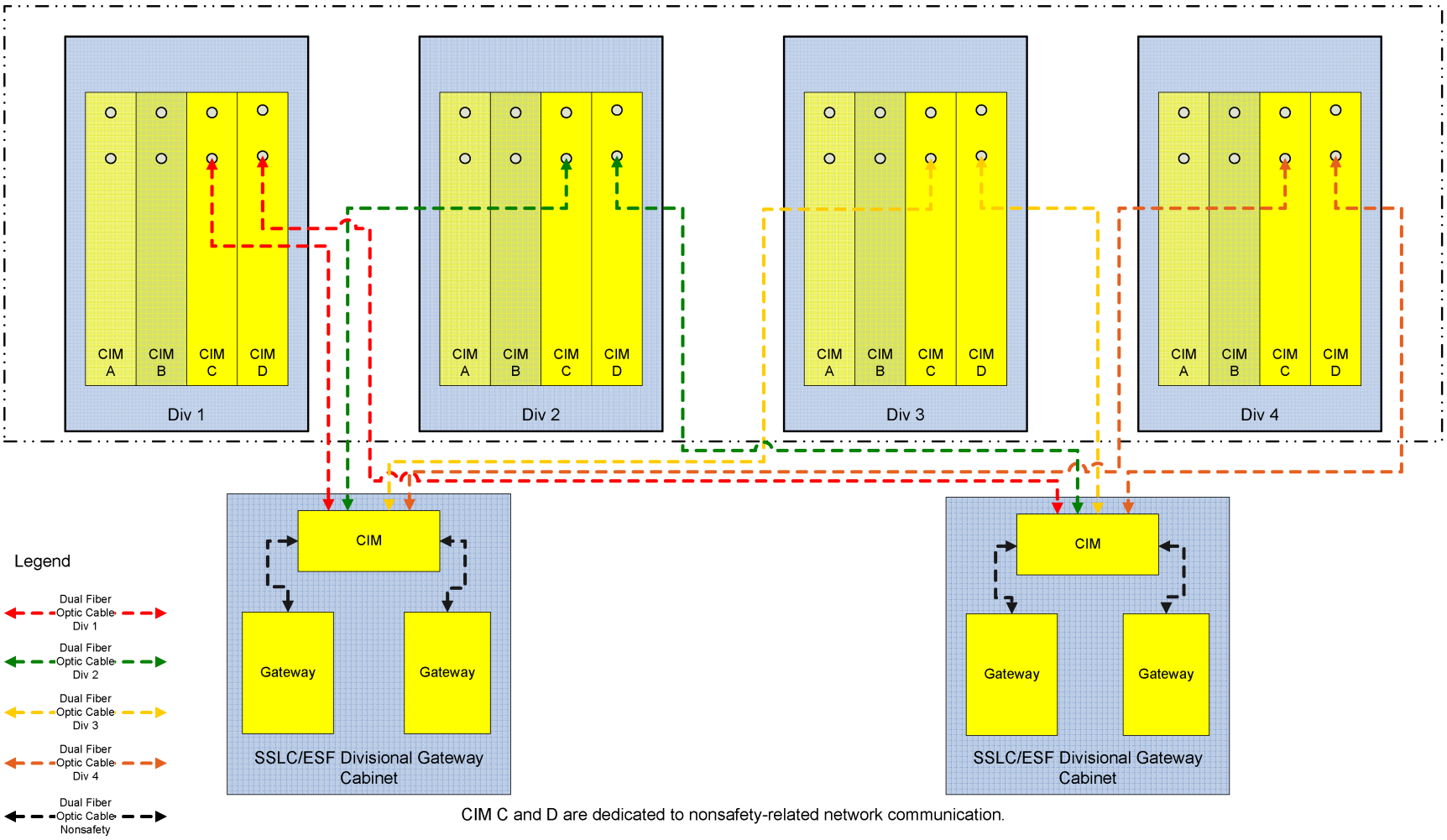

CIM C and D are dedicated to nonsafety-related network communication.

7.4 Safety-Related Safe Shutdown and Nonsafety-Related Cold Shutdown Systems

In accordance with the Standard Review Plan, this section describes "...those instrumentation and control (I&C) systems used to achieve and maintain a safe shutdown condition of the plant." Some I&C systems perform cold shutdown functions and are not safety-related. This is justified by the existence of safety-related systems (Isolation Condenser System [ICS], Gravity-Driven Cooling System [GDCS], Standby Liquid Control [SLC] system, and Passive Containment Cooling System [PCCS]) that use natural circulation in the performance of their shutdown functions. Additionally, some safety-related criteria, such as provision of redundant trains and protection against single failures, are implemented in the design of the nonsafety-related systems. Consequently, safety-related and nonsafety-related systems performing safe shutdown or cold shutdown functions, respectively, are addressed in this section.

7.4.1 Standby Liquid Control System

7.4.1.1 System Design Bases

The SLC system design bases are presented within Subsection 9.3.5.

The I&C for the SLC support the passive system capability requirements to perform the following.

- Provide a diverse, backup means to shut down the reactor from full power to a subcritical condition, using soluble boron injection, and maintain the reactor subcritical while it is brought to a cold shutdown condition. SLC system logic provides manual initiation capability in the Main Control Room (MCR), to satisfy the diverse shutdown requirements, and is independent of normal reactivity control provisions.
- Provide system actuation upon receipt of manual and automatic initiation signals in response to either Anticipated Transients Without Scram (ATWS) events, or design basis events (DBE) requiring Emergency Core Cooling System (ECCS) operation.

Four divisions of safety-related sense and command logic implemented in the four Safety System Logic and Control/Engineered Safety Features (SSLC/ESF) divisions (refer to Subsection 7.3.5) are used to support the ECCS function. The safety-related ATWS mitigation (ATWS/SLC) logic is utilized to perform the diverse emergency shutdown function and for automatic SLC initiation and for automatic SLC accumulator isolation. Redundant SLC accumulator level and pressure instrumentation is provided to monitor system performance and to ensure reliable logic processing. Valve position indication and continuity monitoring of the SLC squib injection valves are provided to ensure availability.

Safety-related SLC system components are designed for the environmental conditions applicable to their location. Safety-related SLC system components are also designed to preclude adverse interaction from nonsafety-related portions of the system.

The SLC design bases are discussed further within Subsection 9.3.5, and Figure 9.3-1 shows the basic configuration. Table 15.1-5, NSOA System Event Matrix, shows the events crediting the SLC system for mitigation.

The SLC system initiation functions are part of a group of systems collectively called the Safety-Related Distributed Control and Information System (Q-DCIS). A simplified network functional diagram of the DCIS is included as Figure 7.1-1. This diagram indicates the relationships of the SSLC/ESF and ATWS/SLC system with its safety-related peers, and with nonsafety-related plant data systems collectively called the Nonsafety-Related Distributed Control and Information System (N-DCIS). Subsections 7.1.1 and 7.1.2 contain a description of these relationships.

7.4.1.2 System Description

A detailed system description is given in Subsection 9.3.5.2. The I&C of the SLC system are described below. The safety-related SLC system provides diverse backup capability for reactor shutdown, which is independent of the Reactor Protection System (RPS). For the reactor shutdown function, the SLC system is manually initiated from the MCR by using any two of four switches that will require at least two manual operator actions. Parameters such as neutron flux, reactor vessel pressure and level, and control rod position are available to the operator in the MCR to assess the need for manual SLC initiation. Additionally, accumulator pressure and solution level, as well as squib injection valve and shut-off valve status indication, are provided in the MCR to monitor the operating and performance status of the SLC system.

The SLC system is initiated automatically as part of the ECCS, to mitigate Loss-of-Coolant-Accident (LOCA) events. The SLC system receives an actuation command 50 seconds after a sustained RPV Level 1 signal for 10 seconds, as described in the Automatic Depressurization System (ADS) logic discussion in Subsection 7.3.1. The SLC system also receives a diverse ECCS initiation signal from the Diverse Protection System (DPS).

The SLC system also starts automatically on an ATWS mitigation signal persisting for 180 seconds. The ATWS mitigation (ATWS/SLC) logic performs the diverse emergency shutdown function (in compliance with the requirements of 10 CFR 50.62). ATWS/SLC logic is described in Section 7.8.1, Diverse I&C Systems, and is depicted on Figure 7.8-3, ATWS Mitigation Logic (SLC System Initiation, Feedwater Runback).

The ATWS/SLC logic uses hardware, and software platforms diverse from the Safety System Logic and Control/Engineered Safety Features (SSLC/ESF), RPS, and DPS hardware/software platforms. ATWS/SLC sensors are not shared with the SSLC/ESF hardware/software platform and are diverse from the DPS hardware/software platform sensors.

To avoid reducing boron concentration during SLC operation, the SLC system logic transmits an isolation signal to the Reactor Water Clean-Up/Shutdown Cooling System (RWCU/SDC) via the Leak Detection and Isolation System (LD&IS).

To avoid the injection of nitrogen into the Reactor Pressure Vessel (RPV) System, four divisional, safety-related level sensors per SLC accumulator are used to provide automatic isolation of series injection shut-off valves on (a voted two-out-of-four) low accumulator level. The ICP ATWS/SLC function performs the shut-off valve isolation logic.

Accumulator temperature, solution level, and accumulator pressure are indicated locally inside the accumulator room.

Boron injection and shut-off valve position status are provided in the MCR.

7.4.1.2.1 Power Sources

Power for the safety functions of the SLC system is derived from safety-related 120 VAC Uninterruptible Power Supplies (UPS) (see Subsection 8.3.1.1.3). Divisional assignments are made to ensure the availability of each SLC system loop, assuming one safety-related division of power is not in service in addition to a single active failure. Additionally, a squib initiator in each loop is activated by the DPS as part of the diversity and defense-in-depth strategy (described in Subsection 7.8.1.2). To avoid adverse interaction, electrical isolation is maintained between the safety-related divisions and the DPS.

7.4.1.2.2 Control Functions

There are four control functions for the SLC system.

- The firing signals to the squib initiators originate from SSLC/ESF for the ECCS injection function, from ATWS/SLC for the ATWS mitigation function, and from DPS. The system can also be initiated by manual control switches in the MCR. Successful firing of either or both squib valves in each SLC system loop assures completion of the SLC system operation.
- An open signal is provided to the normally open injection shut-off valves to support the injection function. Control logic also is provided for automatic closure of the shut-off valves. Shut-off valve isolation occurs automatically on a two-out-of-four low-level logic, using the safety-related accumulator level instrumentation. Closure signals to the redundant, fail-as-is shut-off valves ensure that at least one valve closes, to prevent nitrogen entry into the RPV. To prevent interference with the safety-related SLC injection function, neither DPS nor SSLC/ESF can operate the injection shut-off valves, only ATWS/SLC controllers can terminate injection after its two-out-of-four low accumulator level signal is received.
- Control logic also is provided for manual venting of the accumulators. This function is not safety-related. Serial solenoid valves in each vent line may be actuated by respective manual switches in the MCR.
- Automatic nitrogen makeup to the accumulators is provided to accommodate slow long-term leakage from the system. This makeup function is required only to maintain accumulator pressure. It is not required to assure full solution injection and therefore, is not safety-related.

7.4.1.3 Safety Evaluation

The safety evaluation for the mechanical aspects of the SLC system is presented in Subsection 9.3.5.3. The SLC I&C are capable of performing their intended safety-related functions based on the following design features. The safety-related SLC I&C are designed to operate under the environmental conditions anticipated at their equipment locations. Inter-division communication (and communication with nonsafety-related interfaces) occurs through qualified isolation devices. Isolated ECCS initiation signals, as well as isolated ATWS mitigation signals from the DPS, are transmitted to the SLC squib injection valves to provide defense against a common mode software failure of the SSLC/ESF logic platform (discussed in Section 7.8).

Only the automatic actuation logic originating from within the SLC system transmits the low accumulator-level isolation signals for the injection shut-off valves. The SLC systems send the RWCU/SDC isolation command via the LD&IS on SLC system injection. The SLC system logic is implemented on separate components of the diverse ATWS/SLC ICP.

Redundant divisions of voting logic enable the SLC system to perform its safety-related function with one division removed from service coincident with a single failure. Division of sensors bypass capability allows a safety-related SLC sensor to be removed from service, while maintaining a high level of reliability. Indication of the bypass condition provides off-normal condition status monitoring. With an SLC accumulator-level sensor removed from service, the shut-off valve voting logic changes from two-out-of-four to two-out-of-three. Triplicate SSLC/ESF and ATWS/SLC signals are used to confirm the demand for squib injection valve operation. Three load drivers in series are provided to avoid spurious operation of the squib valves. Disable/test switches are provided to allow removal of a squib valve initiator and associated control circuit from service, and to protect against spurious operation while performing maintenance. Continuity monitoring of the squib injection valve circuitry is provided to confirm availability automatically. Position indication for the SLC system valves also is provided to determine system configuration.

Manual SLC system initiation requires operation of two of four control switches, with each switch requiring two distinct operator actions.

In addition to squib injection valve continuity monitoring; status indication of squib injection and injection shut-off valves; accumulator level and pressure indication; and alarms are provided to allow monitoring of SLC accumulator standby status.

The SLC system also conforms to the applicable general requirements for safety-related systems presented in Chapter 3.

Table 7.1-1 identifies the SLC system and associated codes and standards applied, in accordance with the SRP. This subsection addresses I&C systems conformance to regulatory requirements, guidelines, and industry standards.

7.4.1.3.1 Code of Federal Regulations

10 CFR 50.34(f)(2)(iii)[I.D.1], Human factors engineering principles applied to control room design:

- Conformance: The SLC design conforms to these requirements.

10 CFR 50.34(f)(2)(v)[I.D.3], Bypass and operable automatic status indication of safety systems:

- Conformance: The SLC system design conforms to this requirement.

10 CFR 50.43(e), Innovative means of accomplishing safety functions:

- Conformance: When innovative means are used in the I&C design it complies with 10 CFR 50.43(e).

10 CFR 50.49, Environmental qualification of electric equipment important to safety for nuclear power plants:

- Conformance: The SLC conforms to these requirements. See Table 3.11-1 (Electrical and Mechanical Equipment for Environmental Qualification).

10 CFR 50.55a(a)(1), Quality standards for systems important to safety:

- Conformance: The SLC system design conforms to these standards.

10 CFR 50.55a(h), Protection and safety systems compliance with IEEE Std. 603:

- Conformance: The SLC system design conforms to IEEE Std. 603. Conformance information is found in Subsections 7.1.6.6.1.1 through 7.1.6.6.1.27. Additional information concerning how the SLC system design conforms to IEEE Std. 603 is discussed below.
    - IEEE Std. 603, Section 4.2 (Safety-related Functions): See Subsections 7.4.1.1 and 9.3.5.1.
    - IEEE Std. 603, Section 4.3 (Permissive Conditions for Operating Bypasses): Permissive conditions for operating bypasses are discussed in Subsections 9.3.5.2 and 9.3.5.3.
    - IEEE Std. 603, Section 4.6 (Spatially Dependent Variables): Spatial dependency of monitored variables is not applicable to SLC system design.
    - IEEE Std. 603, Section 5.2 (Completion of Protective Actions): Completion of Protective Actions is not applicable beyond that discussed in Subsection 7.1.6.6.1.3.
    - IEEE Std. 603, Section 5.7 (Capability for Test and Calibration): Test and Calibrate features are discussed in Subsections 7.4.1.4 and 9.3.5.4.
    - IEEE Std. 603, Sections 6.2 and 7.2 (Manual Control): See Subsections 7.4.1.2.2, 7.4.1.3, 9.3.5.2 and 9.3.5.5.
    - IEEE Std. 603, Section 6.4 (Derivation of System Inputs): The SLC system derives its sense and command features from direct measurements as described in Subsections 7.4.1.2, 7.4.1.5 and 9.3.5.5.

- Section 6.5 (Capability of Test and Calibration): Capability for test, calibrate, and sampling inspection features are discussed in Subsections 7.4.1.4 and 9.3.5.4.
- Sections 6.6 and 7.4 (Operating Bypasses): Operating bypasses for the SLC system design beyond that discussed in Subsection 7.1.6.6.1.22 are not applicable.
- Sections 6.7 and 7.5 (Maintenance Bypasses): Maintenance bypasses for the SLC system design beyond that discussed in Subsection 7.1.6.6.1.23 are not applicable.
- Section 8.2 (Non-Electrical Power Sources): Non-Electrical power sources for the SLC system design are discussed in Subsections 7.1.6.6.1.26 and 9.3.5.2.
- Section 8.3 (Maintenance Bypasses): Maintenance bypasses for the SLC system design are discussed in Subsection 7.4.1.3.

10 CFR 52.47, Contents of applications; technical information, level of design information:

- Conformance: The level of detail provided for the SLC system within the DCD conforms to this requirement.

10 CFR 52.47(a)(21), Resolution of unresolved and generic (medium- and high-priority) safety issues identified in NUREG-0933:

- Conformance: Resolution of unresolved and generic safety issues is discussed in Section 1.11.

10 CFR 52.47(a)(25), Interface requirements for portions of the plant not within scope of certified design application:

- Conformance: There are no interface requirements for the SLC system.

10 CFR 52.47(b)(1), ITAAC in design certification application:

- Conformance: ITAAC are provided for I&C systems and equipment in Tier 1.

10 CFR 52.47(c)(2), Innovative means to accomplish safety function design completeness requirements per 10 CFR 50.43(e):

- Conformance: The I&C design may use innovative means for accomplishing safety functions.

7.4.1.3.2 **General Design Criteria.**

In accordance with Table 7.1-1, the following General Design Criteria (GDC) are addressed for the SLC system:

GDC 1, 2, 4, 13, 19, 20, 21, 22, 23, 24, 29, 35, and 37:

- Conformance: The SLC system design conforms to these GDC.

7.4.1.3.3 Staff Requirements Memoranda

SRM on Item II.Q of SECY 93-087:

- Conformance: The SLC system design conforms to these criteria by providing diverse I&C as described in Section 7.8.

7.4.1.3.4 Regulatory Guides

RG 1.22, Periodic Testing of Protection System Actuation Functions:

- Conformance: The SLC system design conforms to RG 1.22.

RG 1.47, Bypassed and Inoperable Status Indication for Nuclear Power Plant Safety Systems:

- Conformance: The SLC system design conforms to RG 1.47.

RG 1.53, Application of the Single Failure Criterion to Safety Systems:

- Conformance: The SLC is organized into four physically and electrically-isolated divisions that use the principles of independence and redundancy to conform to the single failure criterion as defined by IEEE Std. 379, Section 4, and IEEE Std. 603, Section 5.1; additionally, the design meets N-2 conditions. Analyses complying with IEEE Std. 379 will be used to confirm the safety-related system designs' conformance to the single failure criterion.

  The SLC system design is a redundant backup to the reactor control and scram systems, and performs an ECCS function. The SLC system design has two redundant and parallel squib-type valves in each loop. Only one valve in each loop is required for the safety-related function of the SLC system. The SLC system instrumentation assuring operability of the system also is redundant.

RG 1.75, Criteria for Independence of Electrical Safety Systems:

- Conformance: The SLC system design conforms to RG 1.75 as described in Subsections 8.3.1.3 and 8.3.1.4.

RG 1.89, Environmental Qualification of Certain Electric Equipment Important to Safety for Nuclear Power Plants:

- Conformance: The SLC system design conforms to RG 1.89. See Table 3.11-1 (Electrical and Mechanical Equipment for Environmental Qualification).

RG 1.97, Criteria for Accident Monitoring Instrumentation for Nuclear Power Plants:

- Conformance: The ESBWR I&C conforms to RG 1.97. Specific instruments credited for RG 1.97 compliance are determined as part of the HFE development process as discussed in Subsection 7.5.1.3.4.

RG 1.100, Seismic Qualification of Electric and Mechanical Equipment for Nuclear Power Plants:

- Conformance: The SLC system design conforms to RG 1.100. See Sections 3.9 (Mechanical Systems and Components) and 3.10 (Seismic and Dynamic Qualification of Mechanical and Electrical Equipment).

RG 1.105, Setpoints for Safety-Related Instrumentation:

- Conformance: The SLC system design conforms to RG 1.105, as described in Reference 7.4-2.

RG 1.118, Periodic Testing of Electric Power and Protection Systems:

- Conformance: Periodic testing of the protection systems is performed in accordance with IEEE Std. 338, as modified by RG 1.118.

RG 1.151, Instrument Sensing Lines:

- Conformance: The SLC system design conforms to RG 1.151.

RG 1.152, Criteria for Use of Computers in Safety Systems of Nuclear Power Plants:

- Conformance: The SLC system design conforms to RG 1.152.

RG 1.153, Criteria for Safety Systems:

- Conformance: The SLC system is designed to satisfy the requirements of IEEE Std. 603, as endorsed by RG 1.153.

RG 1.168, Verification, Validation, Reviews, and Audits for Digital Computer Software Used in Safety Systems of Nuclear Power Plants:

- Conformance: The SLC system design conforms to RG 1.168 as implemented on the SSLC/ESF platform. The SLC system design conforms to RG 1.168 as implemented on the independent control platform.

RG 1.169, Configuration Management Plans for Digital Computer Software Used in Safety Systems of Nuclear Power Plants:

- Conformance: The SLC system design conforms to RG 1.169 as implemented on the SSLC/ESF platform. The SLC system design conforms to RG 1.169 as implemented on the independent control platform.

RG 1.170, Software Test Documentation for Digital Computer Software Used in Safety Systems of Nuclear Power Plants:

- Conformance: The SLC system design conforms to RG 1.170 as implemented on the SSLC/ESF platform. The SLC system design conforms to RG 1.170 as implemented on the independent control platform.

RG 1.171, Software Unit Testing for Digital Computer Software Used in Safety Systems of Nuclear Power Plants:

- Conformance: The SLC system design conforms to RG 1.171 as implemented on the SSLC/ESF platform. The SLC system design conforms to RG 1.171 as implemented on the independent control platform.

RG 1.172, Software Requirements Specifications for Digital Computer Software Used in Safety Systems of Nuclear Power Plants:

- Conformance: The SLC system design conforms to RG 1.172 as implemented on the SSLC/ESF platform. The SLC system design conforms to RG 1.172 as implemented on the independent control platform.

RG 1.173, Developing Software Life Cycle Processes for Digital Computer Software Used in Safety Systems of Nuclear Power Plants:

- Conformance: The SLC system design conforms to RG 1.173 as implemented on the SSLC/ESF platform. The SLC system design conforms to RG 1.173 as implemented on the independent control platform.

RG 1.180, Guidelines for Evaluating Electromagnetic and Radio-Frequency Interference in Safety-Related Instrumentation and Control Systems:

- Conformance: The SLC system design conforms to RG 1.180. See Table 3.11-1 (Electrical and Mechanical Equipment for Environmental Qualification).

RG 1.204, Guidelines for Lightning Protection of Nuclear Power Plants:

- Conformance: The SLC system design conforms to RG 1.204.

RG 1.209, Guidelines for Environmental Qualification of Safety-Related Computer-Based Instrumentation and Control Systems in Nuclear Power Plants:

- Conformance: The SLC system design conforms to RG 1.209. See Table 3.11-1 (Electrical and Mechanical Equipment for Environmental Qualification).

7.4.1.3.5 **Branch Technical Positions**

BTP HICB-8, Guidance for Application of Regulatory Guide 1.22:

- Conformance: The SLC system design conforms to BTP HICB-8.

BTP HICB-10, Guidance on Application of Regulatory Guide 1.97:

- Conformance: The ESBWR I&C conforms to RG 1.97. Specific instruments credited for RG 1.97 compliance are determined as part of the HFE development process as discussed in Section 7.5.

BTP HICB-11, Guidance on Application and Qualification of Isolation Devices:

- Conformance: The SLC system design conforms to BTP HICB-11. SSLC/ESF logic controllers for the SLC use safety-related fiber-optic CIMs and fiber-optic cables for interconnections between safety-related divisions for data exchange and for interconnections between safety-related and nonsafety-related devices.

BTP HICB-12, Guidance on Establishing and Maintaining Instrument Setpoints:

- Conformance: The SLC system design conforms to BTP HICB-12.

BTP HICB-14, Guidance on Software Reviews for Digital Computer-Based Instrumentation and Control Systems:

- Conformance: The SLC system design conforms to BTP HICB-14.

BTP HICB-16, Guidance on the Level of Detail Required for Design Certification Applications Under 10 CFR Part 52:

- Conformance: The level of detail provided for the SLC system conforms to BTP HICB-16.

BTP HICB-17, Guidance on Self-Test and Surveillance Test Provisions:

- Conformance: The SLC system design conforms to BTP HICB-17.

BTP HICB-19, Guidance for Evaluation of Defense-in-Depth and Diversity in Digital Computer-Based Instrumentation and Control Systems:

- Conformance: The SLC system design conforms to BTP HICB-19. The implementation of an additional diverse instrumentation and control system is described in Section 7.8.

BTP HICB-21, Guidance on Digital Computer Real-Time Performance:

- Conformance: The SLC system design conforms to BTP HICB-21.

7.4.1.4 Testing and Inspection Requirements

Testing and inspection requirements are described further in Subsection 9.3.5.4. An initial SLC system performance verification test is conducted as part of the startup test program. This test is intended to demonstrate that the SLC system performance is in accordance with design requirements.

A full test of this system is not possible during plant operation. Other than the two squib valves in each loop, there are no active components in this system that are required to actuate for injection to occur. Only one squib valve actuation in each loop is required for injection to occur. If one of the valves in each loop actuates with the system in its normal operating configuration, and critical system parameters (accumulator level and pressure) are within their normal ranges, then injection would occur. Testing of the squib injection and injection shut-off valve logic is performed periodically to verify operability.

Routine testing, monitoring of critical system parameters, and surveillances ensure operability with low probability of demand failure.

7.4.1.5 Instrumentation and Control Requirements

Status indications of full-open or full-closed valve positions are provided for the key valves in the SLC system, such as the squib injection valves and the injection shut-off valves. An open indication for these valves is required to confirm SLC system operation.

Pressure-level and solution-level alarms and indications for each accumulator are provided in the MCR to:

- Ensure operability of the system
- Warn the operator of an out-of-tolerance level or pressure condition
- Provide verification of proper system operation after initiation

The measurements are redundant to minimize vulnerability to instrument or indicator failure. The level instrumentation for each accumulator is quadruple-redundant to support the two-out-of-four initiation logic for closure of the shut-off valve. The pressure indications and alarms are dual redundant and the signals from both channels are needed before adding nitrogen to an accumulator. These instruments also provide local level and pressure indication.

Local indication and MCR alarms are provided for the nitrogen gas and neutron poison solution makeup. The low-level alarms are set to provide adequate time for recharging the manually operated nitrogen and sodium pentaborate solution supply systems.

7.4.2 Remote Shutdown System

7.4.2.1 System Design Bases

The safety-related Remote Shutdown System (RSS) is used to provide operators with the means to safely shut down the reactor from a place outside the MCR. The RSS provides remote control of the systems needed to bring and maintain the reactor to a hot shutdown after a scram. The RSS also provides the subsequent capability to achieve and maintain stable shutdown conditions as well as cold shutdown conditions.

7.4.2.2 System Description

7.4.2.2.1 General

The RSS consists of two redundant and independent panels located in the Division 1 and Division 2 quadrants of the Reactor Building. Division 1 and Division 2 and nonsafety-related parameters displayed and controlled on the MCR VDUs can also be displayed and controlled from either of the two RSS panels. Each panel contains:

- Division 1 Manual Scram Switch
- Division 2 Manual Scram Switch
- Division 1 Manual Main Steam Isolation Valve (MSIV) Isolation Switch
- Division 2 Manual MSIV Isolation Switch
- Division 1 Safety-related Video Display Unit (VDU)
- Division 2 Safety-related VDU
- PIP A Nonsafety-related VDU
- PIP B Nonsafety-related VDU
- Nonsafety-related Communications Equipment

Data from the Q-DCIS and N-DCIS networks are available for display on the RSS panels. Because the VDUs on the RSS panels are connected to Q-DCIS or N-DCIS through the same networks serving corresponding VDUs at the MCR, Division 1 and 2 safety-related and nonsafety-related display/control functions at the Q-DCIS and N-DCIS MCR VDUs also are available at the RSS panels. A simplified RSS panel schematic is provided in Figure 7.4-1. A simplified network functional diagram of the Q-DCIS and N-DCIS is included as Figure 7.1-1. This diagram indicates the relationships of safety-related and nonsafety-related systems with their peers, and with plant data acquisition systems. Section 7.1 contains a description of these relationships. The software for the RSS safety-related VDUs is developed as part of the SSLC/ESF platform hardware/software development process. The software for the RSS nonsafety-related VDUs is developed as part of the nonsafety-related network segment hardware/software development processes.

The two RSS panels are located in different rooms inside the Reactor Building (RB). Each RSS Panel room has a sliding fire door with a minimum fire rating of three hours. The RSS panel room environment is similar to the MCR environment. Access to and use of the RSS panels is administratively controlled. This satisfies the control access requirement of IEEE Std. 603, Section 5.9.

The RSS provides sufficient redundancy in its control and monitoring capability, to accommodate a single failure in the interfacing systems, a single failure in the RSS controls and the event that caused the MCR evacuation. The RSS is designed such that any failure within it does not degrade the capability of interfacing safety-related systems. The RSS satisfies the single failure criterion and independence requirements of IEEE Std. 603, Sections 5.1, 5.6, and 6.3.

7.4.2.2.2 **Operating Conditions**

The following conditions are assumed coincident with the event necessitating evacuation of the MCR and transfer of operation to the RSS panel.

- The plant is operating under normal conditions and at less than or equal to rated power. No Anticipated Operational Occurrence (AOO), seismic event, or other abnormal plant condition except for loss of off-site power is assumed.
- The RSS panel is powered from buses supplied by uninterruptible safety-related and nonsafety-related 120 VAC systems.
- The reactor operator can either manually scram the reactor before leaving the MCR, or use the manual scram switches on the RSS panel.
- Plant personnel have evacuated the MCR.
- The reactor operator can isolate the main steam lines by closing the manual Main Steam Isolation Valve (MSIV) isolation switches from the RSS.
- The reactor feedwater system, which is normally available, is conservatively assumed to be inoperable.
- The initiating event is assumed not to cause failure of the Alternating Current (AC) control power supplies to the RSS panel, or failure of the power feeds to equipment functionally controlled from the RSS panel. This assumption is justified because the power feeds to the RSS do not pass through the MCR.

7.4.2.2.3 System Operation

When evacuation of the MCR is necessary, the reactor is manually scrammed. If there has been no loss of off-site power, the turbine bypass valves automatically control reactor pressure, and the reactor feedwater system automatically maintains RPV water level. These functions will remain operable because the safety-related and nonsafety-related controllers are not located in the same fire area as the MCR nor are they affected by adverse impacts on the MCR VDUs and switches after an MCR evacuation; as a result, reactor cooldown is achieved through the normal heat sinks. This cooldown process can be supplemented from the RSS panel using the RWCU/SDC system. The RWCU/SDC system provides the capability to bring the reactor from a high-pressure condition to cold shutdown. Control of both RWCU/SDC trains is provided on either RSS panel. The Reactor Component Cooling Water System (RCCWS) is aligned to provide cooling water to the RWCU/SDC non-regenerative heat exchangers, and the Plant Service Water System (PSWS) is aligned to cool the RCCW heat exchangers. Control of two RCCW trains and two PSWS trains is provided on either RSS panel.

However, if the reactor feedwater system is not available due to loss of off-site power, as postulated in the first bullet of Subsection 7.4.2.2.2 Operating Conditions, control of the Control Rod Drive (CRD) system from the RSS may be utilized. Control of the high-pressure makeup injection capability of the CRD system ensures that the RPV water level remains above the ADS trip setpoint and above the elevation of the RWCU/SDC mid-vessel suction line nozzle. If main steam line isolation automatically occurs, or is manually initiated from the RSS, the ICS automatically controls

reactor pressure. Because the logic processing equipment for the ICS (or any other safety or nonsafety-related system) is outside the MCR, ICS operation is not affected by an event necessitating MCR evacuation, and continued operation of the isolation condensers is assured. If the event necessitating MCR evacuation results in a loss of the reactor pressure regulator, but does not cause main steam line isolation, the ICS initiates on high pressure. With the ICS in operation, the isolation condensers provide initial decay heat removal, and further reactor cooldown is achieved from the RSS panels using the RWCU/SDC.

7.4.2.3 Safety Evaluation

The RSS is classified as a safety-related system that can control safety-related systems or equipment.

The RSS provides instrumentation and controls (I&C) outside the MCR to allow prompt hot shutdown of the reactor after a scram and to maintain safe conditions during hot shutdown. It also provides capability for achieving stable shutdown conditions as well as subsequently achieving cold shutdown of the reactor through the use of suitable operating procedures.

Table 7.1-1 identifies the RSS and the associated codes and standards applied, in accordance with the SRP. This subsection addresses I&C systems conformance to regulatory requirements, guidelines, and industry standards.

7.4.2.3.1 Code of Federal Regulations

10 CFR 50.34(f)(2)(iii)[I.D.1], Human factors engineering principles applied to control room design:

- Conformance: The RSS design conforms to these requirements.

10 CFR 50.34(f)(2)(v)[I.D.3], Bypass and operable automatic status indication of safety systems:

- Conformance: The RSS design conforms to these requirements.

10 CFR 50.43(e), Innovative means of accomplishing safety functions:

- Conformance: When innovative means are used in the I&C design it complies with 10 CFR 50.43(e).

10 CFR 50.49, Environmental qualification of electric equipment important to safety for nuclear power plants:

- Conformance: The RSS conforms to these requirements. See Table 3.11-1 (Electrical and Mechanical Equipment for Environmental Qualification).

10 CFR 50.55a(a)(1), Quality standards for systems important to safety:

- Conformance: The RSS design conforms to these requirements.

10 CFR 50.55a(h), Protection and safety systems compliance with IEEE Std. 603:

- Conformance: The RSS design conforms to IEEE Std. 603. Conformance information is found in Subsections 7.1.6.6.1.1 through 7.1.6.6.1.27. Additional information concerning how the RSS design conforms to IEEE Std. 603 is discussed below.
  - IEEE Std. 603, Section 4.2 (Safety-Related Function): See Subsections 7.4.2.1 and 7.4.2.2.2.
  - IEEE Std. 603, Section 4.3 (Permissive Conditions for Operating Bypasses): Permissive conditions for operating bypasses are not applicable for the RSS design.
  - IEEE Std. 603, Section 4.6 (Spatially Dependent Variables): Spatial dependency of monitored variables is not applicable to RSS design.
  - IEEE Std. 603, Section 5.1 (Single Failure Criterion): See Subsection 7.4.2.2.1.
  - IEEE Std. 603, Section 5.2 (Completion of Protective Actions): Completion of Protective Actions is not applicable beyond that discussed in Subsection 7.1.6.6.1.3.
  - IEEE Std. 603, Section 5.6 (Independence): See Subsection 7.4.2.2.1.
  - IEEE Std. 603, Section 5.7 (Capability for Test and Calibration): See Subsection 7.4.2.4. Calibration is not applicable to RSS.
  - IEEE Std. 603, Section 5.9 (Control of Access): See Subsection 7.4.2.2.1.
  - IEEE Std. 603, Sections 6.2 and 7.2 (Manual Control): See Subsections 7.2.1.5.5 and 7.4.2.2.3.
  - IEEE Std. 603, Section 6.3 (Interaction Between the Sense and Command Features and Other Systems): See Subsection 7.4.2.2.1.
  - IEEE Std. 603, Section 6.4 (Derivation of System Inputs): Derivation of System Inputs is not applicable for the RSS.
  - IEEE Std. 603, Section 6.5 (Capability of Test and Calibration): Testing sense, command sensors, and calibration are not applicable to RSS.
  - IEEE Std. 603, Sections 6.6 and 7.4 (Operating Bypasses): Operating bypasses for the RSS are not applicable beyond that discussed in Subsection 7.1.6.6.1.22.
  - IEEE Std. 603, Sections 6.7 and 7.5 (Maintenance Bypasses): Maintenance bypasses for the RSS are not applicable beyond that discussed in Subsection 7.1.6.6.1.23.
  - IEEE Std. 603, Section 8.2 (Non-Electrical Power Sources): Non-Electrical power sources for the RSS are not applicable beyond that discussed in Subsection 7.1.6.6.1.26.
  - IEEE Std. 603, Section 8.3 (Maintenance Bypasses): Maintenance bypasses for the RSS are not applicable beyond that discussed in Subsection 7.1.6.6.1.27.

10 CFR 52.47, Contents of applications; technical information, level of design information:

- Conformance: The level of detail provided for the RSS within the DCD conforms to this requirement.

10 CFR 52.47(a)(21), Resolution of unresolved and generic (medium- and high-priority) safety issues identified in NUREG-0933:

- Conformance: Resolution of unresolved and generic safety issues is discussed in Section 1.11.

10 CFR 52.47(a)(25), Interface requirements for portions of the plant not within scope of certified design application:

- Conformance: There are no interface requirements for RSS.

10 CFR 52.47(b)(1), ITAAC in design certification application:

- Conformance: ITAAC are provided for I&C systems and equipment in Tier 1.

10 CFR 52.47(c)(2), Innovative means to accomplish safety function design completeness requirements per 10 CFR 50.43(e):

- Conformance: The I&C design may use innovative means for accomplishing safety functions.

7.4.2.3.2 General Design Criteria

GDC 1, 2, 4, 13, 19, 20, 21, 22, 23, 24, and 29:

- Conformance: The RSS design conforms to these GDC. Per Note (3) in Table 7.1-1, RSS is included as a subsystem of SSLC/ESF platform. However, the GDCs applicable to RSS are a subset of those applicable to SSLC/ESF overall.

7.4.2.3.3 Staff Requirements Memoranda

SRM on Item II.T of SECY 93-087:

- Conformance: The AMS conforms to these criteria for redundancy, independence, and separation in that the alarm system is considered redundant as follows:
    - Alarm points are sent via dual networks to redundant data communication processors using dual power supplies. These processors are dedicated to alarm processing.
    - The alarms are displayed on multiple independent Video Display Units (VDUs) (dual power supplies on each).
    - The alarms are driven by redundant datalinks to the AMS (dual power). There are redundant alarm processors.
    - There is at least one horn and at least one voice speaker. Test buttons are available to test the horn and all the lights.
    - There are no alarms requiring manually controlled actions for safety systems to accomplish their safety-related functions.

7.4.2.3.4 Regulatory Guides

RG 1.22, Periodic Testing of Protection System Actuation Functions:

- Conformance: The RSS design conforms to RG 1.22.

RG 1.47, Bypassed and Inoperable Status Indication for Nuclear Power Plant Safety Systems:

- Conformance: The RSS system design conforms to RG 1.47.

RG 1.53, Application of the Single Failure Criterion to Safety Systems:

- Conformance: The RSS is organized into four physically and electrically-isolated divisions that use the principles of independence and redundancy to conform to the single failure criterion as defined by IEEE Std. 379, Section 4, and IEEE Std. 603, Section 5.1; additionally, the design meets N-2 conditions. Analyses complying with IEEE Std. 379 will be used to confirm the safety-related system designs' conformance to the single failure criterion.

In addition, separation and isolation is preserved both mechanically and electrically in accordance with IEEE 603, Sections 5.6 and 6.3, and RG 1.75.

RG 1.75, Criteria for Independence of Electrical Safety Systems:

- Conformance: The RSS design conforms to RG 1.75 as described in Subsections 8.3.1.3 and 8.3.1.4.

RG 1.89, Environmental Qualification of Certain Electric Equipment Important to Safety for Nuclear Power Plants:

- Conformance: The RSS design conforms to RG 1.89. See Table 3.11-1 (Electrical and Mechanical Equipment for Environmental Qualification).

RG 1.97, Criteria for Accident Monitoring Instrumentation for Nuclear Power Plants:

- Conformance: The ESBWR I&C conforms to RG 1.97. Specific instruments credited for RG 1.97 compliance are determined as part of the HFE development process as discussed in Subsection 7.5.1.3.4.

RG 1.100, Seismic Qualification of Electric and Mechanical Equipment for Nuclear Power Plants:

- Conformance: The RSS design conforms to RG 1.100. See Sections 3.9 (Mechanical Systems and Components) and 3.10 (Seismic and Dynamic Qualification of Mechanical and Electrical Equipment).

RG 1.118, Periodic Testing of Electric Power and Protection Systems:

- Conformance: Periodic testing of the protection systems is performed in accordance with IEEE Std. 338, as modified by RG 1.118.

RG 1.153, Criteria for Safety Systems:

- Conformance: The RSS is designed to satisfy the requirements of IEEE Std. 603, as endorsed by RG 1.153.

RG 1.180, Guidelines for Evaluating Electromagnetic and Radio-Frequency Interference in Safety-Related Instrumentation and Control Systems:

- Conformance: The RSS design conforms to RG 1.180. See Table 3.11-1 (Electrical and Mechanical Equipment for Environmental Qualification).

RG 1.204, Guidelines for Lightning Protection of Nuclear Power Plants:

- Conformance: The RSS design conforms to RG 1.204.

RG 1.209, Guidelines For Environmental Qualification of Safety-Related Computer-Based Instrumentation and Control Systems in Nuclear Power Plants:

- Conformance: The RSS Safety-Related system design conforms to RG 1.209. See Table 3.11-1 (Electrical and Mechanical Equipment for Environmental Qualification).

7.4.2.3.5 **Branch Technical Positions**

BTP HICB-8, Guidance for Application of Regulatory Guide 1.22:

- Conformance: The RSS design complies with BTP HICB-8.

BTP HICB-10, Guidance on Application of Regulatory Guide 1.97:

- Conformance: The ESBWR I&C conforms to RG 1.97. Specific instruments credited for RG 1.97 compliance are determined as part of the HFE development process as discussed in Section 7.5.

BTP HICB-11, Guidance on Application and Qualification of Isolation Devices:

- Conformance: The RSS design conforms to BTP HICB-11. Logic controllers for the RSS use safety-related fiber-optic CIMs and fiber-optic cables for interconnections between safety-related divisions for data exchange and for interconnections between safety-related and nonsafety-related devices.

BTP HICB-12, Guidance on Establishing and Maintaining Instrument Setpoints:

- Conformance: The RSS design conforms to BTP HICB-12.

BTP HICB-14, Guidance on Software Reviews for Digital Computer-Based Instrumentation and Control Systems:

- Conformance: The RSS design conforms to BTP HICB-14.

BTP HICB-16, Guidance on the Level of Detail Required for Design Certification Applications Under 10 CFR Part 52:

- Conformance: The level of detail provided for RSS conforms to BTP HICB-16.

BTP HICB-17, Guidance on Self-Test and Surveillance Test Provisions:

- Conformance: The RSS design conforms to BTP HICB-17.

BTP HICB-21, Guidance on Digital Computer Real-Time Performance:

- Conformance: The RSS design conforms to BTP HICB-21.

7.4.2.3.6 Three Mile Island Action Plan Requirements

In accordance with the SRP for 7.4 and with Table 7.1-1, there are no Three Mile Island (TMI) action plan requirements applicable for the RSS. TMI action plan requirements are generically addressed in Table 1A-1 of Appendix 1A.

From the foregoing analyses, it is concluded that the RSS meets its design bases.

7.4.2.4 Testing and Inspection Requirements

The capability to safely shut down the reactor from outside the MCR is confirmed during the Initial Plant Test Program (Refer to Section 14.2). Testing to confirm the functionality of each RSS control circuit is performed during each refueling outage.

Minimum Requirements to Place and Maintain Plant in MODE 3 from Location Outside MCR

On the basis of Sections 15.5.6.2 and 15.5.6.3 which provide the assumptions and results of safe shutdown fire analysis, only a manual scram of the plant from the MCR is required to reach and maintain mode 3 (hot shutdown). If the operator is not able to initiate manual scram from the MCR due to spread of the fire, manual scram can be initiated from either of the RSS panels. Therefore, the operability of Division 1& 2 Manual Scram Switches at either of the two RSS panels is the minimum requirement to achieve and maintain mode 3 from a location outside MCR.

7.4.2.5 Instrumentation and Control Requirements

The Division 1 and Division 2 parameters and nonsafety-related parameters displayed and controlled on the MCR VDUs can also be displayed and controlled from either of the RSS panels.

7.4.3 Reactor Water Cleanup/Shutdown Cooling System

7.4.3.1 System Design Bases

The RWCU/SDC system design bases are described further in Subsections 5.4.8.1 and 5.4.8.2. Figure 5.1-4 shows the basic configuration of the RWCU/SDC system.

The RWCU/SDC system is one of the dual redundant Plant Investment Protection (PIP) systems whose instrumentation belongs to the N-DCIS. The RWCU/SDC system functions are not safety-related. Accordingly, the RWCU/SDC system has no safety-related design bases beyond a containment isolation function and providing instrumentation for detection of system breaks outside the containment. The containment is isolated by signals from the LD&IS (as described in Subsection 7.3.3).

7.4.3.1.1 **(Deleted)**

7.4.3.1.2 **(Deleted)**

7.4.3.1.3 **(Deleted)**

7.4.3.2 System Description

7.4.3.2.1 Summary Description

The overall functional description of the RWCU/SDC system is provided in Subsection 5.4.8.

The I&C maintains the RWCU/SDC system process conditions within the limits necessary to control the system and satisfy its design bases. Protective features include isolating the RWCU/SDC system from the RPV in response to an LD&IS signal. The above isolation features protect the reactor core by minimizing the potential loss of RPV coolant inventory and avoid removal of boron from the reactor coolant if the SLC system is actuated.

7.4.3.2.2 Detailed System Description

The RWCU/SDC system measurements of flow, pressure, temperature, and conductivity are recorded, indicated, and indicated in the MCR. Valves behind shielding are furnished with on-off air operators that are individually controlled from local panels or from extension stems penetrating the shielding.

Indicating and control instruments and components are mounted on panels or local racks and are visible and accessible for repair, calibration, and testing.

The main process pumps are started automatically or from the MCR by VDU control with status indication. The pumps are driven by solid-state adjustable speed drives. Temperature elements located in the Nuclear Boiler System (NBS) and a reactor cooldown controller with temperature feedback control each pump to limit the rate of reactor water cooldown. A low pump suction flow interlock either prevents the pumps from starting or runs back or stops the pumps automatically. A reactor low water level (Level 3) pump speed runback interlock is provided to protect the pumps from cavitation during shutdown.

The pumps are supplied from separate and preferred power sources. The power supplies are automatically switched to dual on-site standby diesel-generators following the loss of preferred power (LOPP).

Motor-operated valves are operable automatically or manually by a VDU switch from the MCR. Each valve motor is stopped by limit switches or torque switches. The positions of air/nitrogen-operated containment isolation valves are indicated in the MCR to permit the plant operators to assess their status. An automatic signal overrides a manual signal to these valves. Containment isolation valve closing speeds are selected to protect the reactor core and limit radioactivity release in case of a RWCU/SDC system pipe break outside the containment.

The signals that either prevent containment isolation valves from opening (if closed) or close the valves (if open) are:

- SLC system actuation is sent to the RWCU/SDC system via the LD&IS
- LD&IS actuation occurs

The isolation signal from the LD&IS to the reactor bottom suction sampling line containment isolation valves can be overridden by a manual opening signal when a reactor bottom fluid sample is required for post-accident sampling purposes.

The plant LD&IS, including the portion related to the RWCU/SDC system, is further described in Subsection 7.3.3.

A flow control valve from the upper RPV nozzle controlling flow from the upper RPV region is located on the RWCU/SDC system suction line. The flow is set manually using a flow controller located in the MCR. Using thermocouples on the RPV bottom head drain line and the system suction line, the control valve from the RPV upper region can be throttled during reactor startup and shutdown modes to maintain the required temperature difference across the vessel. The valve actuator is air-operated.

The RWCU/SDC system also has a dump, or "overboarding," control valve to maintain RPV water level during reactor startup. This excess water is overboarded to the main condenser (Subsection 5.4.8). The valve is operated using instrument air and controlled both manually and automatically from the MCR using a controller and flow indicator. Pressure switches or sensors located downstream of the overboarding control valve protect low pressure components by alarming in the MCR on high pressure and by closing the control valve with a high-high pressure signal. When the overboarding valve is used during reactor high pressure conditions, a downstream orifice is used to assist in reducing system pressure; otherwise the orifice is bypassed using a motor-operated valve. The overboarding control valve fails closed upon loss of power or air pressure.

The demineralizer bypass piping has an air-operated modulating flow control valve that bypasses the excess flow above the demineralizer capacity. The demineralizer is protected from over-temperature by automatic controls that first open the demineralizer bypass valve and then close the demineralizer inlet valve.

Flow orifices are used for flow monitoring of demineralizer inlet flow and to open the demineralizer bypass control valve if the flow exceeds the demineralizer capacity.

Conductivity cells are located in the influent and effluent process sample streams of the demineralizers. These detectors are located in sample systems, which cool the sample stream to a constant temperature, eliminating the need for temperature compensation. Influent and effluent conductivity are continuously measured and transmitted to MCR recorders. Measured values in excess of water quality requirements are indicated in the MCR.

The reactor coolant is sampled manually during cooldown, flood-up, or early periods of fuel off-loading when spiking of soluble and insoluble radioisotopic concentrations of corrosion products may occur.

Temperature elements are provided in the RPV bottom drain, the regenerative heat exchanger supply inlet and outlet, the non-regenerative heat exchanger outlet, the demineralizer influent (located at the pump suction), and the inlet and outlet of the regenerative heat exchanger return.

Temperature elements located in the NBS and a reactor cooldown controller with temperature feedback are used to provide the necessary signals to control pump speed during cooldown to maintain the required cooldown rate.

Density compensated system mass flow is measured in the process lines (by mid-vessel nozzles with venturi-type flow elements in each line) from the reactor bottom, located inside the containment. Flow elements also are provided in the Seismic Category I RWCU/SDC return lines to the feedwater lines and in the overboarding lines. The flow sensors for flow elements are arranged in a two-out-of-four logic configuration used to detect high RWCU/SDC differential mass flow due to a break outside the containment and to close the inboard and outboard containment isolation valves of the affected RWCU/SDC equipment train. The containment isolation function on detection of RWCU/SDC high differential mass flow (due to a break outside the containment) is part of the LD&IS described in Subsection 7.3.3. See Figures 7.4-2a through 7.4-2e for the logic for detection of a RWCU/SDC pipe break outside containment.

7.4.3.3 Safety Evaluation

The RWCU/SDC system functions are nonsafety-related, with the exception of containment isolation functions and providing instruments to detect high differential mass flow following a RWCU/SDC break outside the containment. Refer to Subsection 6.2.4 for the containment isolation functions, and Subsection 7.3.3 for the containment isolation and leak detection functions performed by the LD&IS.

Table 7.1-1 identifies the RWCU/SDC system and the associated codes and standards applied, in accordance with the SRP. This subsection addresses I&C systems conformance to regulatory requirements, guidelines, and industry standards.

7.4.3.3.1 Code of Federal Regulations

10 CFR 50.34(f)(2)(iii)[I.D.1], Human factors engineering principles applied to control room design:

- Conformance: The RWCU/SDC design conforms to these requirements.

10 CFR 50.43(e), Innovative means of accomplishing safety functions:

- Conformance: When innovative means are used in the I&C design it complies with 10 CFR 50.43(e).

10 CFR 50.49, Environmental qualification of electric equipment important to safety for nuclear power plants:

- Conformance: The RWCU/SDC conforms to these requirements. See Table 3.11-1 (Electrical and Mechanical Equipment for Environmental Qualification).

10 CFR 50.55a(a)(1), Quality standards for systems important to safety:

- Conformance: The RWCU/SDC system design conforms to these requirements.

10 CFR 50.55a(h), Protection and safety systems compliance with IEEE Std. 603:

- Conformance: The safety-related requirements are addressed in Subsection 7.3.3, LD&IS.

10 CFR 50.62, Requirements for reduction of risk from ATWS events for light-water-cooled nuclear power plants:

- Conformance: The RWCU/SDC conforms to these requirements.

10 CFR 52.47, Contents of applications; technical information, level of design information:

- Conformance: The level of detail provided for the RWCU/SDC within the DCD conforms to this requirement.

10 CFR 52.47(a)(21), Resolution of unresolved and generic (medium- and high-priority) safety issues identified in NUREG-0933:

- Conformance: Resolution of unresolved and generic safety issues for I&C is discussed in Section 1.11.

10 CFR 52.47(a)(25), Interface requirements for portions of the plant not within scope of certified design application:

- Conformance: There are no interface requirements for the RWCU/SDC system.

10 CFR 52.47(b)(1), ITAAC in design certification application:

- Conformance: ITAAC are provided for the I&C systems and equipment in Tier 1.

10 CFR 52.47(c)(2), Innovative means to accomplish safety function design completeness requirements per 10 CFR 50.43(e):

- Conformance: The RWCU/SDC design may use innovative means for accomplishing safety functions.

7.4.3.3.2 General Design Criteria

GDC 1, 2, 4, 13, 19, 24, 33, and 38:

- Conformance: The RWCU/SDC system is nonsafety-related, but is designed to conform to these GDC.

7.4.3.3.3 Regulatory Guides

RG 1.89, Environmental Qualification of Certain Electric Equipment Important to Safety for Nuclear Power Plants:

- Conformance: See Table 3.11-1 (Electrical and Mechanical Equipment for Environmental Qualification).

RG 1.97, Criteria for Accident Monitoring Instrumentation for Nuclear Power Plants:

- Conformance: The RWCU/SDC design conforms to RG 1.97, which endorses IEEE 497.

RG 1.100, Seismic Qualification of Electric and Mechanical Equipment for Nuclear Power Plants:

- Conformance: See Sections 3.9 (Mechanical Systems and Components) and 3.10 (Seismic and Dynamic Qualification of Mechanical and Electrical Equipment).

RG 1.151, Instrument Sensing Lines:

- Conformance: RG 1.151 is applicable to safety-related sensing lines. However, sections of endorsed standard ISA-S67.02.01 on design practices for tubing, vents, and drains also apply to nonsafety-related instrumentation.

RG 1.152, Criteria for Use of Computers in Safety Systems of Nuclear Power Plants:

- Conformance: The RWCU/SDC system design conforms to RG 1.152.

RG 1.153, Criteria for Safety Systems:

- Conformance: The safety-related requirements are addressed in Subsection 7.3.3, LD&IS.

RG 1.168, Verification, Validation, Reviews, and Audits for Digital Computer Software Used in Safety Systems of Nuclear Power Plants:

- Conformance: The RWCU/SDC design conforms to RG 1.168.

RG 1.169, Configuration Management Plans for Digital Computer Software Used in Safety Systems of Nuclear Power Plants:

- Conformance: The RWCU/SDC design conforms to RG 1.169.

RG 1.170, Software Test Documentation for Digital Computer Software Used in Safety Systems of Nuclear Power Plants:

- Conformance: The RWCU/SDC design conforms to RG 1.170.

RG 1.171, Software Unit Testing for Digital Computer Software Used in Safety Systems of Nuclear Power Plants:

- Conformance: The RWCU/SDC design conforms to RG 1.171.

RG 1.172, Software Requirements Specifications for Digital Computer Software Used in Safety Systems of Nuclear Power Plants:

- Conformance: The RWCU/SDC design conforms to RG 1.172.

RG 1.173, Developing Software Life Cycle Processes for Digital Computer Software Used in Safety Systems of Nuclear Power Plants:

- Conformance: The RWCU/SDC design conforms to RG 1.173.

RG 1.180, Guidelines for Evaluating Electromagnetic and Radio-Frequency Interference in Safety-Related Instrumentation and Control Systems:

- Conformance: The RWCU/SDC system design conforms to RG 1.180. See Table 3.11-1 (Electrical and Mechanical Equipment for Environmental Qualification).

RG 1.209, Guidelines for Environmental Qualification of Safety-Related Computer-Based Instrumentation and Control Systems in Nuclear Power Plants:

- Conformance: The RWCU/SDC system design conforms to RG 1.209. See Table 3.11-1 (Electrical and Mechanical Equipment for Environmental Qualification).

7.4.3.3.4 Branch Technical Positions

BTP HICB-1, Guidance on Isolation of Low-Pressure Systems from the High-Pressure Reactor Coolant System:

- Conformance: The RWCU/SDC design conforms to BTP HICB-1.

BTP HICB-10, Guidance on Application of Regulatory Guide 1.97:

- Conformance: The ESBWR I&C conforms to RG 1.97. Specific instruments credited for RG 1.97 compliance are determined as part of the HFE development process as discussed in Section 7.5.

BTP HICB-16, Guidance on the Level of Detail Required for Design Certification Applications Under 10 CFR Part 52:

- Conformance: The level of detail provided for the RWCU/SDC system design conforms to BTP HICB-16.

7.4.3.4 Testing and Inspection Requirements

The RWCU/SDC system instruments are calibrated and tested during the preoperational testing program to confirm the instrumentation is correctly installed and functions as designed. In addition, calibration and surveillance testing of the containment isolation devices is performed at regular intervals. To the maximum extent possible, instrumentation requiring regular calibration, testing, and maintenance is mounted on accessible panels or racks located outside high radiation areas.

7.4.3.5 Instrumentation and Control Requirements

Operation of the RWCU/SDC system is from the MCR. The main I&C available to the MCR operator includes:

- Manual and automatic flow controllers for system, demineralizer, and overboarding flow.
- Flow indications for system, demineralizer, and overboarding flow.
- Position indications for containment isolation valves, flow control valves, and motor-operated valves.
- Temperature indication for demineralizer influent water.
- Conductivity recorders for demineralizer influent and effluent.
- Temperature of the system supply water (from the RPV bottom head).
- Temperature of the system return water (to feedwater line).
- Temperatures of the non-regenerative and regenerative heat exchanger water (coolant side).
- Process alarms (for example, high water temperatures, high overboarding line pressure, low system flow, high system flow, high conductivity).
- Pressure indication for the overboarding line.

7.4.4 Isolation Condenser System

7.4.4.1 System Design Bases

Refer to Subsection 5.4.6.1 for the design bases of the ICS. Figure 5.1-3 shows the basic configuration of the ICS.

The ICS is one of the ESF systems whose I&C is implemented in SSLC/ESF and whose isolation functions are implemented in both SSLC/ESF and ICP, belong to a group of systems collectively called the Q-DCIS. A simplified network functional diagram of the DCIS is included as Figure 7.1-1. This diagram indicates the relationships of the SSLC/ESF with its safety-related peers, and with nonsafety-related plant data systems collectively called the N-DCIS. Section 7.1 contains a description of these relationships.

The ICS containment isolation functions are implemented by the SSLC/ESF. Additionally, the ICP provides a redundant isolation signal on DPV opening, and this signal is provided to one containment isolation valve on each ICS steam or condensate line.

7.4.4.2 System Description

Refer to Subsection 5.4.6.2 for the ICS system description.

7.4.4.3 Safety Evaluation

Conformance of ICS equipment to the requirements of IEEE Std. 603 (other than I&C) is addressed in Subsections 5.4.6.2 and 5.4.6.3. The paragraph on "Isolation Condenser Operation" in Subsection 5.4.6.2 addresses the requirements of IEEE Std. 603, Section 4.10. Subsection 5.4.6.3 addresses the requirements of IEEE Std. 603, Section 4.8. Conformance of ICS I&C equipment to the requirements of IEEE Std. 603, Sections 5.1 and 8.1, is addressed in this subsection. The ICS is designed to operate from safety-related power sources. The system instrumentation is powered by four divisionally separated sources of safety-related power. The ICS uses two-out-of-four logic from SSLC/ESF (refer to Subsection 7.3.5) for automatic operation and two-out-of-four logic in SSLC/ESF and ICP or isolation of each of the four separate isolation condenser trains as shown in Figure 7.4-3. The actuating logic and actuator power for the inner isolation valves for the four ICS trains are on two safety-related 120 VAC divisional UPS (Refer to Subsection 8.3.1.1.3) different from the two divisional power sources for the outer isolation valves.

ICs are initiated by two-out-of-four logic in the four divisions of SSLC/ESF inter-divisional signals are isolated at the source and transmitted using optical fiber. Each of the four IC equipment trains can be initiated by either DPS or any one of three SSLC/ESF divisions and their associated safety-related power source. Consequently, the loss of two of the four safety-related power supplies does not result in the loss of any one ICS equipment train. However, second and third sources of safety-related power are provided to operate the ICS automatic venting system during long-term ICS operation; otherwise the manually controlled backup venting system, which uses one of the divisional power sources starting the ICS, can be used for long-term operation.

If the three safety-related power supplies used to start an individual ICS equipment train fail, then the ICS would automatically start, because of the "fail open" actuation of the condensate return bypass valves and vent valves upon loss of electrical power to the solenoids controlling its nitrogen-actuated valves.

The ICS is initiated automatically as part of the ECCS to provide additional liquid inventory to mitigate LOCA events. The signals that initiate ICS operation are:

- High reactor pressure.
- Low reactor water level (Level 2) with time delay.
- Low reactor water level (Level 1).

- Loss of power generation buses (loss of feedwater flow) in reactor run mode.
- MSIV position indication (indicating closure) whenever the Reactor Mode Switch is in the Run position.
- Operator manual initiation.

The ICS is automatically isolated to mitigate buildup of noncondensable gases during LOCA events. The signal that isolates ICS is a confirmed opening of any two DPV's.

The operator is able to stop any individual ICS equipment train whenever the RPV pressure is below a reset value overriding the ICS automatic actuation signal following MSIV closure.

The IC/PCCS pool has four safety-related level sensors in each IC/PCCS inner expansion pool. These level sensors are part of the Fuel and Auxiliary Pool Cooling System (FAPCS). Each IC/PCCS inner expansion pool is connected to the equipment storage pool by two cross-connect valves in parallel where one valve is a pneumatic operated valve with an accumulator and two load drivers per initiator (actuation similar to Figure 7.4-3) and the other is a squib valve with three load drivers per initiator (actuation similar to Figure 7.3-2). Each valve has four initiators (three divisional initiators and one DPS initiator [see Section 7.8]). These valves open when a low water level condition is detected in the IC/PCCS inner expansion pool to which they are connected to provide makeup water for the first 72 hours of design basis events. The residual heat removal function of the safety-related ICS is further backed up by the safety-related ESF combination of ADS, PCCS, and GDCS; by the nonsafety-related RWCU/SDC loops; or by the makeup function of the CRD system operating in conjunction with safety relief valves and the suppression pool cooling systems.

The DPS discussed in Section 7.8 provides diverse nonsafety-related signals for ICS initiation and opening of pool cross-connect valves between the equipment storage pool and the IC/PCCS expansion pools.

Table 7.1-1 identifies the ICS and the associated codes and standards applied, in accordance with the SRP. This subsection addresses I&C systems conformance to regulatory requirements, guidelines, and industry standards.

7.4.4.3.1 Code of Federal Regulations

10 CFR 50.34(f)(1)(v)[II.K.3.13], HPCI and RCIC initiation levels:

- Conformance: The ICS design conforms to these requirements.

10 CFR 50.34(f)(2)(iii)[I.D.1], Human factors engineering principles applied to control room design:

- Conformance: The ICS design conforms to these requirements.

10 CFR 50.34(f)(2)(v)[I.D.3], Bypass and operable automatic status indication of safety systems:

- Conformance: The ICS design conforms to this requirement.

10 CFR 50.34(f)(2)(xxi)[II.K.1.22], Auxiliary heat removal systems functional requirements under conditions when main feedwater system is not operable:

- Conformance: The ICS conforms to these requirements.

10 CFR 50.34(f)(2)(xxiii)[II.K.2.10], Anticipatory reactor protection system trip requirements under conditions of loss of main feedwater and on turbine trip:

- Conformance: The ICS design conforms to these requirements. The ICS will initiate in response to a Loss of All Feedwater Flow Event. This is an anticipatory trip actuated on a power generation buss loss event.

10 CFR 50.43(e), Innovative means of accomplishing safety functions:

- Conformance: When innovative means are used in the I&C design it complies with 10 CFR 50.43(e).

10 CFR 50.49, Environmental qualification of electric equipment important to safety for nuclear power plants:

- Conformance: The ICS conforms to these requirements. See Table 3.11-1 (Electrical and Mechanical Equipment for Environmental Qualification).

10 CFR 50.55a(h), Protection and safety systems compliance with IEEE Std. 603:

- Conformance: The ICS design conforms to IEEE Std. 603. Conformance information is found in Subsections 7.1.6.6.1 through 7.1.6.6.1.27. Additional information concerning how the ICS conforms to IEEE Std. 603 is discussed below.
    - IEEE Std. 603, Section 4.2 (Safety-related Functions): See Subsection 5.4.6.1.
    - IEEE Std. 603, Section 4.3 (Permissive Conditions for Operating Bypasses): Permissive conditions for operating bypasses are discussed in Subsections 5.4.6.2.3 and 7.4.4.3.
    - IEEE Std. 603, Section 4.6 (Spatially Dependent Variables): Spatial dependency of monitored variables is not applicable to ICS.
    - IEEE Std. 603, Section 5.2 (Completion of Protective Actions): Completion of Protective Actions are not applicable beyond that discussed in Subsection 7.1.6.6.1.3.
    - IEEE Std. 603, Section 5.7 (Capability for Test and Calibration): Test and Calibrate features are discussed in Subsection 5.4.6.4.
    - IEEE Std. 603, Sections 6.2 and 7.2 (Manual Control): See Subsections 5.4.6.2.2 and 5.4.6.2.3.
    - IEEE Std. 603, Section 6.4 (Derivation of System Inputs): The ICS derives its sense and command features from direct measurements as described in Subsections 5.4.6.5, 7.4.4.3 and 7.8.

- IEEE Std. 603, Section 6.5 (Capability of Test and Calibration): Capability for Test and Calibrate features beyond that discussed in are discussed in Subsection 5.4.6.4.
- IEEE Std. 603, Sections 6.6 and 7.4 (Operating Bypasses): Operating bypasses for the ICS beyond that discussed in Subsection 7.1.6.6.1.22 are not applicable.
- IEEE Std. 603, Sections 6.7 and 7.5 (Maintenance Bypasses): Maintenance bypasses for the ICS beyond that discussed in Subsection 7.1.6.6.1.23 are not applicable.
- IEEE Std. 603, Section 8.2 (Non-Electrical Power Sources): Non-Electrical power sources for the ICS beyond that discussed in Subsection 7.1.6.6.1.26 are not applicable.
- IEEE Std. 603, Section 8.3 (Maintenance Bypasses): Maintenance bypasses for the ICS beyond that discussed in Subsection 7.1.6.6.1.27 are not applicable.

10 CFR 50.63, Loss of all alternating current power:

- Conformance: The ICS conforms to these requirements.

10 CFR 52.47, Contents of applications; technical information, level of design information:

- Conformance: The level of detail provided for the ICS within the DCD conforms to this requirement.

10 CFR 52.47(a)(21), Resolution of unresolved and generic (medium- and high-priority) safety issues identified in NUREG-0933:

- Conformance: Resolution of unresolved and generic safety issues is discussed in Section 1.11.

10 CFR 52.47(a)(25), Interface requirements for portions of the plant not within scope of certified design application:

- Conformance: There are no interface requirements for ICS.

10 CFR 52.47(b)(1), ITAAC in design certification application:

- Conformance: ITAAC are provided for the I&C systems and equipment in Tier 1.

10 CFR 52.47(c)(2), Innovative means to accomplish safety function design completeness requirements per 10 CFR 50.43(e):

- Conformance: The I&C design may use innovative means for accomplishing safety functions.

7.4.4.3.2 General Design Criteria

In accordance with the SRP for Section 7.4 and Table 7.1-1, the following GDC are addressed for the ICS:

GDC 1, 2, 4, 13, 19, 20, 21, 22, 23, 24, 29, 33, 34, 35, 37, and 44:

- Conformance: The ICS design conforms to these GDC.

7.4.4.3.3 Staff Requirements Memoranda

SRM on Item II.Q of SECY 93-087:

- Conformance: The ICS design conforms to these criteria by providing diverse I&C as described in Section 7.8.

7.4.4.3.4 Regulatory Guides

RG 1.22, Periodic Testing of Protection System Actuation Functions:

- Conformance: The ICS system design conforms to RG 1.22.

RG 1.47, Bypassed and Inoperable Status Indication for Nuclear Power Plant Safety Systems:

- Conformance: The ICS design conforms to RG 1.47.

RG 1.53, Application of the Single Failure Criterion to Safety Systems:

- Conformance: The ICS is organized into four physically and electrically-isolated divisions that use the principles of independence and redundancy to conform to the single failure criterion as defined by IEEE Std. 379, Section 4, and IEEE Std. 603, Section 5.1; additionally, the design meets N-2 conditions. Analyses complying with IEEE Std. 379 will be used to confirm the safety-related system designs' conformance to the single failure criterion.

RG 1.62, Manual Initiation of Protective Actions:

- Conformance: The ICS design conforms to RG 1.62.

RG 1.75, Criteria for Independence of Electrical Safety Systems:

- Conformance: The ICS design conforms to RG 1.75 as described in Subsections 8.3.1.3 and 8.3.1.4.

RG 1.89, Environmental Qualification of Certain Electric Equipment Important to Safety for Nuclear Power Plants:

- Conformance: The ICS design conforms to RG 1.89. See Table 3.11-1 (Electrical and Mechanical Equipment for Environmental Qualification).

RG 1.97, Criteria for Accident Monitoring Instrumentation for Nuclear Power Plants:

- Conformance: The ESBWR I&C conforms to RG 1.97. Specific instruments credited for RG 1.97 compliance are determined as part of the HFE development process as discussed in Section 7.5.

RG 1.100, Seismic Qualification of Electric and Mechanical Equipment for Nuclear Power Plants:

- Conformance: The ICS design conforms to RG 1.100. See Sections 3.9 (Mechanical Systems and Components) and 3.10 (Seismic and Dynamic Qualification of Mechanical and Electrical Equipment).

RG 1.105, Setpoints for Safety-Related Instrumentation:

- Conformance: The setpoints used to initiate ICS automatic operation or isolation are established consistent with this guide. Reference 7.4-2 provides a detailed description of the GEH methodology.

RG 1.118, Periodic Testing of Electric Power and Protection Systems:

- Conformance: Periodic testing of the protection systems is performed in accordance with IEEE Std. 338, as modified by RG 1.118.

RG 1.151, Instrument Sensing Lines:

- Conformance: The ICS design conforms with RG 1.151.

RG 1.152, Criteria for Use of Computers in Safety Systems of Nuclear Power Plants:

- Conformance: The ICS design conforms to RG 1.152 as implemented on the SSLC/ESF platform.

RG 1.153, Criteria for Safety Systems:

- Conformance: The ICS is designed to satisfy the requirements of IEEE Std. 603, as endorsed by RG 1.153.

RG 1.168, Verification, Validation, Reviews, and Audits for Digital Computer Software Used in Safety Systems of Nuclear Power Plants:

- Conformance: The ICS design conforms to RG 1.168 as implemented on the SSLC/ESF platform.

RG 1.169, Configuration Management Plans for Digital Computer Software Used in Safety Systems of Nuclear Power Plants:

- Conformance: The ICS design conforms to RG 1.169 as implemented on the SSLC/ESF platform.

RG 1.170, Software Test Documentation for Digital Computer Software Used in Safety Systems of Nuclear Power Plants:

- Conformance: The ICS design conforms to RG 1.170 as implemented on the SSLC/ESF platform.

RG 1.171, Software Unit Testing for Digital Computer Software Used in Safety Systems of Nuclear Power Plants:

- Conformance: The ICS design conforms to RG 1.171 as implemented on the SSLC/ESF platform.

RG 1.172, Software Requirements Specifications for Digital Computer Software Used in Safety Systems of Nuclear Power Plants:

- Conformance: The ICS design conforms to RG 1.172 as implemented on the SSLC/ESF platform.

RG 1.173, Developing Software Life Cycle Processes for Digital Computer Software Used in Safety Systems of Nuclear Power Plants:

- Conformance: The ICS design conforms to RG 1.173 as implemented on the SSLC/ESF platform.

RG 1.180, Guidelines for Evaluating Electromagnetic and Radio-Frequency Interference in Safety-Related Instrumentation and Control Systems:

- Conformance: The ICS design conforms to RG 1.180. See Table 3.11-1 (Electrical and Mechanical Equipment for Environmental Qualification).

RG 1.204, Guidelines for Lightning Protection of Nuclear Power Plants:

- Conformance: The ICS design conforms to RG 1.204.

RG 1.209, Guidelines for Environmental Qualification of Safety-Related Computer-Based Instrumentation and Control Systems in Nuclear Power Plants:

- Conformance: The ICS design conforms to RG 1.209. See Table 3.11-1 (Electrical and Mechanical Equipment for Environmental Qualification).

7.4.4.3.5 **Branch Technical Positions**

BTP HICB-8, Guidance on Application of Regulatory Guide 1.22:

- Conformance: The ICS design conforms to BTP HICB-8.

BTP HICB-10, Guidance on Application of Regulatory Guide 1.97:

- Conformance: The ESBWR I&C conforms to RG 1.97. Specific instruments credited for RG 1.97 compliance are determined as part of the HFE development process as discussed in Section 7.5.

BTP HICB-11, Guidance on Application and Qualification of Isolation Devices:

- Conformance: The ICS design conforms to BTP HICB-11. SSLC/ESF logic controllers for ICS use safety-related fiber-optic communication interface modules and fiber-optic cables for interconnections between safety-related divisions for data exchange and for interconnections between safety-related and nonsafety-related devices.

BTP HICB-12, Guidance on Establishing and Maintaining Instrument Setpoints:

- Conformance: The ICS logic resides within the SSLC/ESF so that the design conforms to BTP HICB-12.

BTP HICB-14, Guidance on Software Reviews for Digital Computer-Based Instrumentation and Control Systems:

- Conformance: The ICS design conforms to BTP HICB-14 as implemented on the SSLC/ESF platform.

BTP HICB-16, Guidance on the Level of Detail Required for Design Certification Applications Under 10 CFR Part 52:

- Conformance: The level of detail provided in the ICS description conforms to BTP HICB-16.

BTP HICB-17, Guidance on Self-Test and Surveillance Test Provisions:

- Conformance: The ICS design conforms to BTP HICB-17.

BTP HICB-19, Guidance for Evaluation of Defense-in-Depth and Diversity in Digital Computer-Based Instrumentation and Control Systems:

- Conformance: The ICS design conforms to BTP HICB-19. The implementation of an additional diverse instrumentation and control system is described in Section 7.8.

BTP HICB-21, Guidance on Digital Computer Real-Time Performance:

- Conformance: The ICS design conforms to BTP HICB-21.

7.4.4.4 Testing and Inspection Requirements

Refer to Subsection 5.4.6.4.

7.4.4.5 Instrumentation and Control Requirements

Refer to Subsection 5.4.6.5.

The ICS indications reported in the MCR are:

- Radiation level in each isolation condenser (IC) pool compartment airspace
- Mass flow rate in condensate return line
- Mass flow rate in steam supply line
- Temperatures of steam and condensate return lines
- Temperatures of IC top and bottom vent lines
- Valve positions

The following manual controls are provided by the ICS to:

- Open/close condensate return valves
- Close condensate return isolation valves
- Close steam supply isolation valves
- Open/close all bottom vent valves

- Open/close all top vent valves
- Open/close purge line valve

7.4.5 High Pressure Control Rod Drive (HP CRD) Isolation Bypass Function

The Control Rod Drive Hydraulic Subsystem supplies high pressure makeup water to the reactor vessel in response to a low RPV water level (Level 2) condition, or in the event GDCS fails to inject following a LOCA. The CRD system is discussed in Subsection 4.6.1. The Control Rod Drive Hydraulic Subsystem is discussed in Subsection 4.6.1.2.4 and depicted on Figure 4.6-8. This subsection discusses the HP CRD isolation bypass function that mitigates the beyond design basis failure of the GDCS to inject following a LOCA. The Control Rod Drive Hydraulic Subsystem is normally isolated following a LOCA. LD&IS logic for the HP CRD isolation under LOCA conditions is discussed in Subsection 7.3.3.

Upon detection of a LOCA and detection of a subsequent failure of the GDCS to inject, the HP CRD isolation bypass logic opens redundant motor-operated isolation bypass valves installed in parallel with the air operated HP CRD isolation valves to provide additional coolant inventory. Safety-related logic for the HP CRD Isolation Bypass Function is implemented in the Independent Control Platform (ICP). Manual initiation capability of the HP CRD Isolation Bypass valves is provided in case of loss of instrument air events.

7.4.5.1 System Design Bases

HP CRD Isolation Bypass Function has the following requirements and 10 CFR 50.2 Design Bases.

- Using safety-related logic inputs, the normally closed HP CRD isolation bypass valves are opened automatically on failure of GDCS to successfully inject water into the reactor.
- Nonsafety-related manual control of the HP CRD isolation bypass valve is provided and isolation bypass valve positions are displayed in the MCR.
- Divisional instrumentation performing the HP CRD isolation bypass function logic are powered by the associated safety-related divisional power supplies.
- Bypass of a division of sensors is annunciated in the MCR.
- The HP CRD isolation bypass function logic executed in the ICP and is diverse from SSLC/ESF.

7.4.5.2 System Description

The HP CRD isolation bypass function automatically bypasses the HP CRD injection isolation valve to compensate for a failure of the GDCS to inject. Unless there are space constraints, the RTIF cabinets house the ICP logic controllers that perform the HP CRD isolation bypass function. The ICP is diverse from the RTIF-NMS platform and SSLC/ESF platforms. The RPV level, drywell pressure and GDCS pool level sensors are used to determine the failure of the GDCS to inject.

- Automatic Operation
  - Normally closed HP CRD isolation bypass valves are open automatically when failure of GDCS system is detected following a LOCA.
- Manual Operation
  - Manual initiation capability is provided for the HP CRD isolation bypass logic.
  - Manual controls for the operation of each HP CRD isolation bypass valve are available in the MCR.
- Actuation Logic
  - ICP logic controls the actuation of the HP CRD isolation bypass valves ICP.
  - Opening of the two HP CRD isolation bypass valves is performed automatically when failure of the GDCS system is detected following a LOCA. Failure of the GDCS is based on pool level in two-out-of-three GDCS pools remaining above setpoint for 11 minutes following a LOCA signal. Level in each of the three GDCS pools are monitored by four redundant ICP sensors.

The following signals are replicated as part of the HP CRD isolation bypass logic:

- Two-out-of-four sensors detect a sustained low RPV water level condition (Level 1) for 10 seconds.
- Two-out-of-four sensors detect a sustained high drywell pressure condition for 60 minutes.

7.4.5.3 **Safety Evaluation**

Although the normally closed HP CRD motor-operated isolation bypass valves are nonsafety-related, the automatic HP CRD isolation bypass logic, which mitigates the beyond design basis failure of multiple GDCS pools to provide coolant makeup, is implemented as a safety-related function. For defense-in-depth, the logic is implemented on the ICP, a safety-related, energized-to actuate, fail-as-is, platform which is diverse from the SSLC/ESF platform and RTIF-NMS platform that contains the HP CRD isolation ESF logic. To provide electrical independence, the safety-related HP CRD isolation bypass logic actuation signal is sent to the Control Rod Drive Hydraulic Subsystem via qualified electrical isolators. The safety-related HP CRD isolation bypass logic provides redundant output contacts for each HP CRD isolation bypass valve motor. Since the nonsafety-related HP CRD isolation bypass valves require power to operate, these redundant safety-related contacts prevent an inadvertent opening of the HP CRD isolation valve flow path in the event of a single failure. Opening of the HP CRD isolation bypass valve can occur only with the HP CRD isolation bypass logic activated either automatically or manually.

The HP CRD isolation bypass function instrumentation located in the drywell is designed to operate in the harsh drywell environment that results from a LOCA. Instrumentation, located outside the drywell, is qualified for the environment in which they must perform their function.

Table 7.1-1 identifies the HP CRD isolation bypass function and the associated codes and standards applied, in accordance with the SRP. This subsection addresses the I&C systems conformance to regulatory requirements, guidelines and industry standards.

7.4.5.3.1 **Code of Federal Regulations**

10 CFR 50.34(f)(2)(iii)[I.D.1], Human factors engineering principles applied to control room design:

- Conformance: The HP CRD isolation bypass function design conforms to these requirements.

10 CFR 50.34(f)(2)(v)[I.D.3], Bypass and operable automatic status indication of safety systems:

- Conformance: The HP CRD isolation bypass function conforms to these requirements.

10 CFR 50.43(e), Innovative means of accomplishing safety functions:

- Conformance: When innovative means are used in the I&C design it complies with 10 CFR 50.43(e).

10 CFR 50.49, Environmental qualification of electric equipment important to safety for nuclear power plants:

- Conformance: The HP CRD isolation bypass function conforms to these requirements. See Table 3.11-1 (Electrical and Mechanical Equipment for Environmental Qualification).

10 CFR 50.55a(a)(1), Quality standards for systems important to safety:

- Conformance: The HP CRD isolation bypass function conforms to this requirement for the use of the applicable standards.

10 CFR 50.55a(h), Protection and safety systems compliance with IEEE Std. 603:

- Conformance: The HP CRD isolation function conforms to IEEE Std. 603. Conformance information is found in Subsections 7.1.6.6.1.1 through 7.1.6.6.1.27. Additional information concerning how the HP CRD isolation function conforms to IEEE Std. 603 is discussed below.
    - IEEE Std. 603, Section 4.2 (Safety-Related Function): See Subsection 7.4.5.1.
    - IEEE Std. 603, Section 4.3 (Permissive Conditions for Operating Bypasses): Permissive conditions for operating bypasses are not applicable for the HP CRD isolation function.
    - IEEE Std. 603, Section 4.6 (Spatially Dependent Variables): See the Actuation Logic section of Subsection 7.4.5.2.
    - IEEE Std. 603, Section 5.2 (Completion of Protective Actions): Completion of protective actions is discussed in Subsection 7.1.6.6.1.3.
    - IEEE Std. 603, Section 5.7 (Capability for Test and Calibration): See Subsection 7.4.5.4.
    - IEEE Std. 603, Sections 6.2 and 7.2 (Manual Control): See Subsections 7.4.5.1 and 7.4.5.2.

- IEEE Std. 603, Section 6.4 (Derivation of System Inputs): Derivation of system inputs for the HP CRD isolation functions are not applicable beyond that discussed in Subsection 7.1.6.6.1.20.
- IEEE Std. 603, Section 6.5 (Capability of Test and Calibration): See Subsection 7.4.5.4.
- IEEE Std. 603, Sections 6.6 and 7.4 (Operating Bypasses): Operating bypasses for the HP CRD isolation function are not applicable beyond that discussed in Subsection 7.1.6.6.1.22.
- IEEE Std. 603, Sections 6.7 and 7.5 (Maintenance Bypasses): Maintenance Bypasses for the HP CRD isolation function are not applicable beyond that discussed in Subsection 7.1.6.6.1.23.
- IEEE Std. 603, Section 8.2 (Non-Electrical Power Sources): Non-Electrical power sources for the HP CRD isolation function are not applicable beyond that discussed in Subsection 7.1.6.6.1.26.
- IEEE Std. 603, Section 8.3 (Maintenance Bypasses): Maintenance bypasses for the HP CRD isolation function are not applicable beyond that discussed in Subsection 7.1.6.6.1.27.

10 CFR 52.47, Contents of applications; technical information, level of design information:

- Conformance: The level of detail provided for the design of the HP CRD isolation bypass function within the DCD conforms to this requirement.

10 CFR 52.47(a)(21), Resolution of unresolved and generic (medium- and high-priority) safety issues identified in NUREG-0933:

- Conformance: Resolution of unresolved and generic safety issues is discussed in Section 1.11.

10 CFR 52.47(a)(25), Interface requirements for portions of the plant not within scope of certified design application:

- Conformance: There are no interface requirements for this section.

10 CFR 52.47(b)(1), ITAAC in design certification application:

- Conformance: ITAAC are provided for the I&C systems and equipment in Tier 1.

10 CFR 52.47(c)(2), Innovative means to accomplish safety function design completeness requirements per 10 CFR 50.43(e):

- Conformance: The I&C design may use innovative means for accomplishing safety-related functions.

7.4.5.3.2 General Design Criteria

GDC 1, 2, 4, 13, 19, 20, 21, 22, 23, 24 and 29:

- Conformance: The HP CRD isolation bypass function design complies with these GDC.

7.4.5.3.3 Staff Requirements Memoranda

SRM on Item II.Q of SECY 93-087:

- Conformance: The HP CRD isolation bypass function design conforms to these criteria. The HP CRD isolation bypass function mitigates a beyond design basis failure of multiple GDCS pools to inject. Although not credited for mitigating the effects of an SSLC/ESF common cause software failure, the logic is implemented on the ICP.

7.4.5.3.4 Regulatory Guides

RG 1.22, Periodic Testing of Protection System Actuation Functions:

- Conformance: The HP CRD isolation bypass function design conforms to RG 1.22. System logic and components are tested periodically during refueling outages.

RG 1.47, Bypassed and Inoperable Status Indication for Nuclear Power Plant Safety Systems:

- Conformance: The HP CRD isolation bypass function design conforms to RG 1.47. Automatic indication is provided in the MCR to inform the operator that the system is inoperable or a division is bypassed.

RG 1.53, Application of the Single Failure Criterion to Safety Systems:

- Conformance: The HP CRD isolation bypass function is organized into four physically and electrically-isolated divisions that use the principles of independence and redundancy to conform to the single failure criterion as defined by IEEE Std. 379, Section 4, and IEEE Std. 603, Section 5.1; additionally, the design meets N-2 conditions. Analyses complying with IEEE Std. 379 will be used to confirm the safety-related system designs' conformance to the single failure criterion.

RG 1.62, Manual Initiation of Protective Actions:

- Conformance: The HP CRD isolation bypass function design complies with RG 1.62. Each division has a manual actuation switch in the MCR. Initiation of the system requires actuation of two switches to ensure that manual initiation is a premeditated act.

RG 1.75, Criteria for Independence of Electrical Safety Systems:

- Conformance: The HP CRD isolation bypass function design conforms to RG 1.75 as described in Subsections 8.3.1.3 and 8.3.1.4.

RG 1.89, Environmental Qualification of Certain Electric Equipment Important to Safety for Nuclear Power Plants:

- Conformance: The HP CRD isolation bypass function design conforms to RG 1.89. See Table 3.11-1 (Electrical and Mechanical Equipment for Environmental Qualification).

RG 1.97, Criteria for Accident Monitoring Instrumentation for Nuclear Power Plants:

- Conformance: The ESBWR I&C conforms to RG 1.97. Specific instruments credited for RG 1.97 compliance are determined as part of the HFE development process as discussed in Section 7.5.

RG 1.100, Seismic Qualification of Electric and Mechanical Equipment for Nuclear Power Plants:

- Conformance: The HP CRD isolation bypass function design conforms to RG 1.100. See Sections 3.9 (Mechanical Systems and Components) and 3.10 (Seismic and Dynamic Qualification of Mechanical and Electrical Equipment).

RG 1.105, Setpoints for Safety-Related Instrumentation:

- Conformance: The setpoints established to control the HP CRD isolation bypass function conform to RG 1.105. Reference 7.4-2 provides a detailed description of the GEH methodology.

RG 1.118, Periodic Testing of Electric Power and Protection Systems:

- Conformance: Periodic testing of the protection systems is performed in accordance with IEEE Std. 338, as modified by RG 1.118.

RG 1.151, Instrument Sensing Lines:

- Conformance: The HP CRD isolation bypass function conforms to RG 1.151. Flow restrictors are provided inside containment on instrument lines connected to the RCPB. Manual isolation valves and self-actuating excess flow check valves are provided outside the drywell. The mechanical design guidelines as defined by ISA-67.02.01 and RG 1.151 are met as applicable for each installation.

RG 1.152, Criteria for Use of Computers in Safety Systems of Nuclear Power Plants:

- Conformance: The HP CRD isolation bypass function design conforms to RG 1.152 as implemented on the independent control platform.

RG 1.153, Criteria for Safety Systems:

- Conformance: The HP CRD isolation bypass function is designed to satisfy the requirements of IEEE Std. 603, as endorsed by RG 1.153.

RG 1.168, Verification, Validation, Reviews, and Audits for Digital Computer Software Used in Safety Systems of Nuclear Power Plants:

- Conformance: The HP CRD isolation bypass function design conforms to RG 1.168 as implemented on the independent control platform.

RG 1.169, Configuration Management Plans for Digital Computer Software Used in Safety Systems of Nuclear Power Plants:

- Conformance: The HP CRD isolation bypass function design conforms to RG 1.169 as implemented on the independent control platform.

RG 1.170, Software Test Documentation for Digital Computer Software Used in Safety Systems of Nuclear Power Plants:

- Conformance: The HP CRD isolation bypass function design conforms to RG 1.170 as implemented on the independent control platform.

RG 1.171, Software Unit Testing for Digital Computer Software Used in Safety Systems of Nuclear Power Plants:

- Conformance: The HP CRD isolation bypass function design conforms to RG 1.171 as implemented on the independent control platform.

RG 1.172, Software Requirements Specifications for Digital Computer Software Used in Safety Systems of Nuclear Power Plants:

- Conformance: The HP CRD isolation bypass function design conforms to RG 1.172 as implemented on the independent control platform.

RG 1.173, Developing Software Life Cycle Processes for Digital Computer Software Used in Safety Systems of Nuclear Power Plants:

- Conformance: The HP CRD isolation bypass function design conforms to RG 1.173 as implemented on the independent control platform.

RG 1.180, Guidelines for Evaluating Electromagnetic and Radio-Frequency Interference in Safety-Related Instrumentation and Control Systems:

- Conformance: The HP CRD isolation bypass function design conforms to RG 1.180. See Table 3.11-1 (Electrical and Mechanical Equipment for Environmental Qualification).

RG 1.204, Guidelines for Lightning Protection of Nuclear Power Plants:

- Conformance: The HP CRD isolation bypass function design conforms to RG 1.204.

RG 1.209, Guidelines for Environmental Qualification of Safety-Related Computer-Based Instrumentation and Control Systems in Nuclear Power Plants:

- Conformance: The HP CRD isolation bypass function design conforms to RG 1.209. See Table 3.11-1 (Electrical and Mechanical Equipment for Environmental Qualification).

7.4.5.3.5 **Branch Technical Positions**

In accordance with the SRP for Section 7.3 and Table 7.1-1, the following BTPs are addressed for the HP CRD isolation bypass function:

BTP HICB-8, Guidance for Application of Regulatory Guide 1.22:

- Conformance: The HP CRD isolation bypass function design conforms to BTP HICB-8.

BTP HICB-10, Guidance on Application of Regulatory Guide 1.97:

- Conformance: The ESBWR I&C conform to RG 1.97. Specific instruments credited for RG 1.97 compliance are determined as part of the HFE development process as discussed in Section 7.5.

BTP HICB-11, Guidance on Application and Qualification of Isolation Devices:

- Conformance: Logic controllers for the HP CRD isolation bypass function use safety-related fiber-optic CIMs and fiber-optic cables for interconnections between safety-related divisions for data exchange and for interconnections between safety-related and nonsafety-related devices.

BTP HICB-12, Guidance on Establishing and Maintaining Instrument Setpoints:

- Conformance: The setpoints established to control the HP CRD isolation bypass function conform to this guide. Reference 7.3-2 provides a detailed description of the GEH methodology.

BTP HICB-14, Guidance on Software Reviews for Digital Computer-Based Instrumentation and Control Systems:

- Conformance: The HP CRD isolation bypass function design conforms to BTP HICB-14 as implemented on the independent control platform.

BTP HICB-16, Guidance on the Level of Detail Required for Design Certification Applications Under 10 CFR Part 52:

- Conformance: The level of detail in the HP CRD isolation bypass function description conforms to BTP HICB-16

BTP HICB-17, Guidance on Self-Test and Surveillance Test Provisions:

- Conformance: The HP CRD isolation bypass function design conforms to BTP HICB-17.

BTP HICB-18, Guidance on the Use of Programmable Logic Controllers in Digital Computer-Based Instrumentation and Control Systems:

- Conformance: Q-DCIS hardware, embedded and operating system software, and peripheral components conform to the guidance of Branch Technical Position HICB-18. Q-DCIS is built and qualified specifically for ESBWR applications as safety-related and not as commercial grade PLCs. The embedded and operating system software meet the acceptance criteria contained in BTP HICB-14, for safety-related applications.

BTP HICB-19, Guidance for Evaluation of Defense-in-Depth and Diversity in Digital Computer-Based Instrumentation and Control Systems:

- Conformance: The HP CRD isolation bypass function design conforms to BTP HICB-19. The discrete logic and solid-state controls used in this design are not subject to the vulnerabilities described by BTP HICB-19.

BTP HICB-21, Guidance on Digital Computer Real-Time Performance:

- Conformance: The HP CRD isolation bypass function design conforms to BTP HICB-21.

7.4.5.3.6 Three Mile Island Action Plan Requirements

In accordance with the SRP for Section 7.3 and with Table 7.1-1, 10 CFR 50.34(f)(2)(v)[I.D.3] and 10 CFR 50.34(f)(2)(xiv)[II.E.4.2] apply to the HP CRD isolation bypass function. The HP CRD isolation bypass function complies with the requirements as indicated above. TMI action plan requirements are addressed in Appendix 1A.

7.4.5.4 Testing and Inspection Requirements

The HP CRD isolation bypass function ICPs are self-tested continually at preset intervals and can be tested during plant operation. The HP CRD isolation bypass valves are tested as part of the High Pressure Makeup Line test. Refer to Subsection 4.6.1.2.4 for more information on system arrangement.

7.4.5.5 Instrumentation and Control Requirements

The performance and effectiveness of the HP CRD isolation bypass valve function in a postulated accident is verified by observing the following MCR indications:

- Status indication of HP CRD isolation bypass valve position
- GDCS pool level indication
- RPV water level indication
- Drywell and RPV pressure indication

The HP CRD isolation bypass function instrumentation located in the drywell is designed to operate in the harsh drywell environment that results from a LOCA. Instrumentation, located outside the drywell, is qualified for the environment in which they must perform their function.

7.4.6 COL Information

None.

7.4.7 References

7.4-1 (Deleted)

7.4-2 GE Hitachi Nuclear Energy, "GEH ESBWR Setpoint Methodology," NEDE-33304P, Class III (Proprietary), Revision 4, May 2010, and NEDO-33304, Class II (Non-proprietary), Revision 4, May 2010.

Figure 7.4-1 Remote Shutdown System Panel Schematic

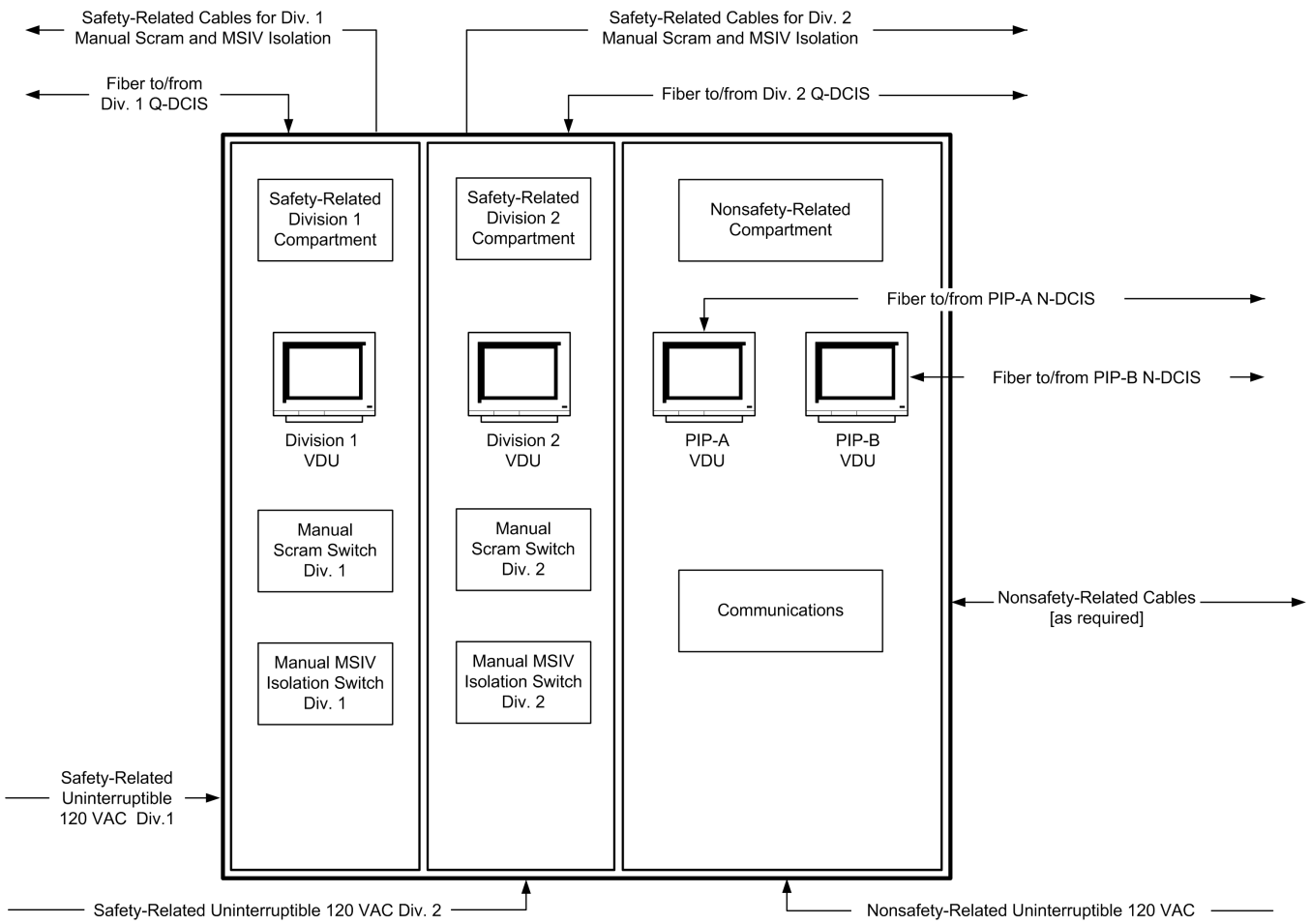

Figure 7.4-2a RWCU/SDC System Train A Differential Mass Flow Logic - Division 1 (Typical For Train B)

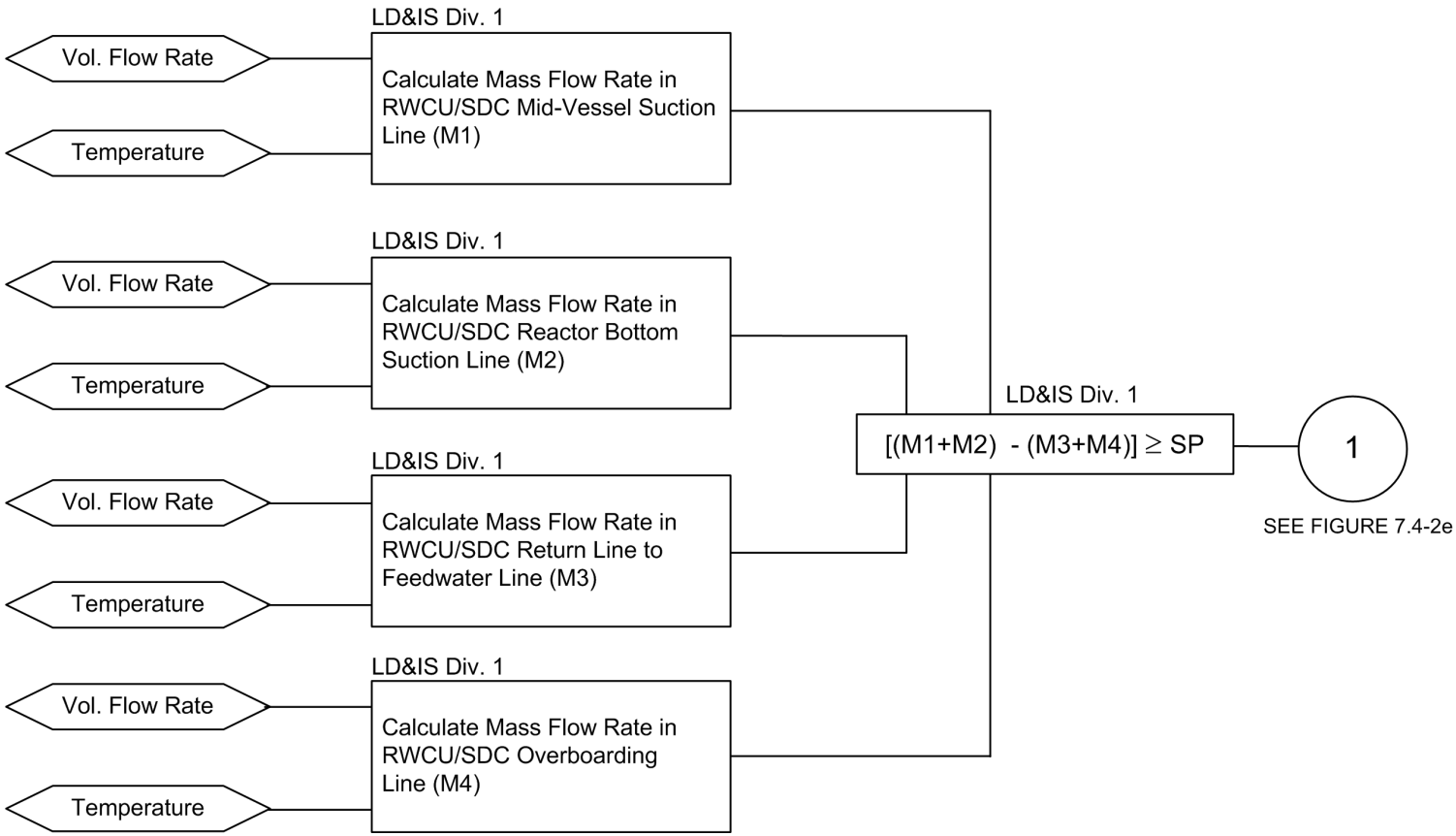

Figure 7.4-2b RWCU/SDC System Train A Differential Mass Flow Logic - Division 2 (Typical For Train B)

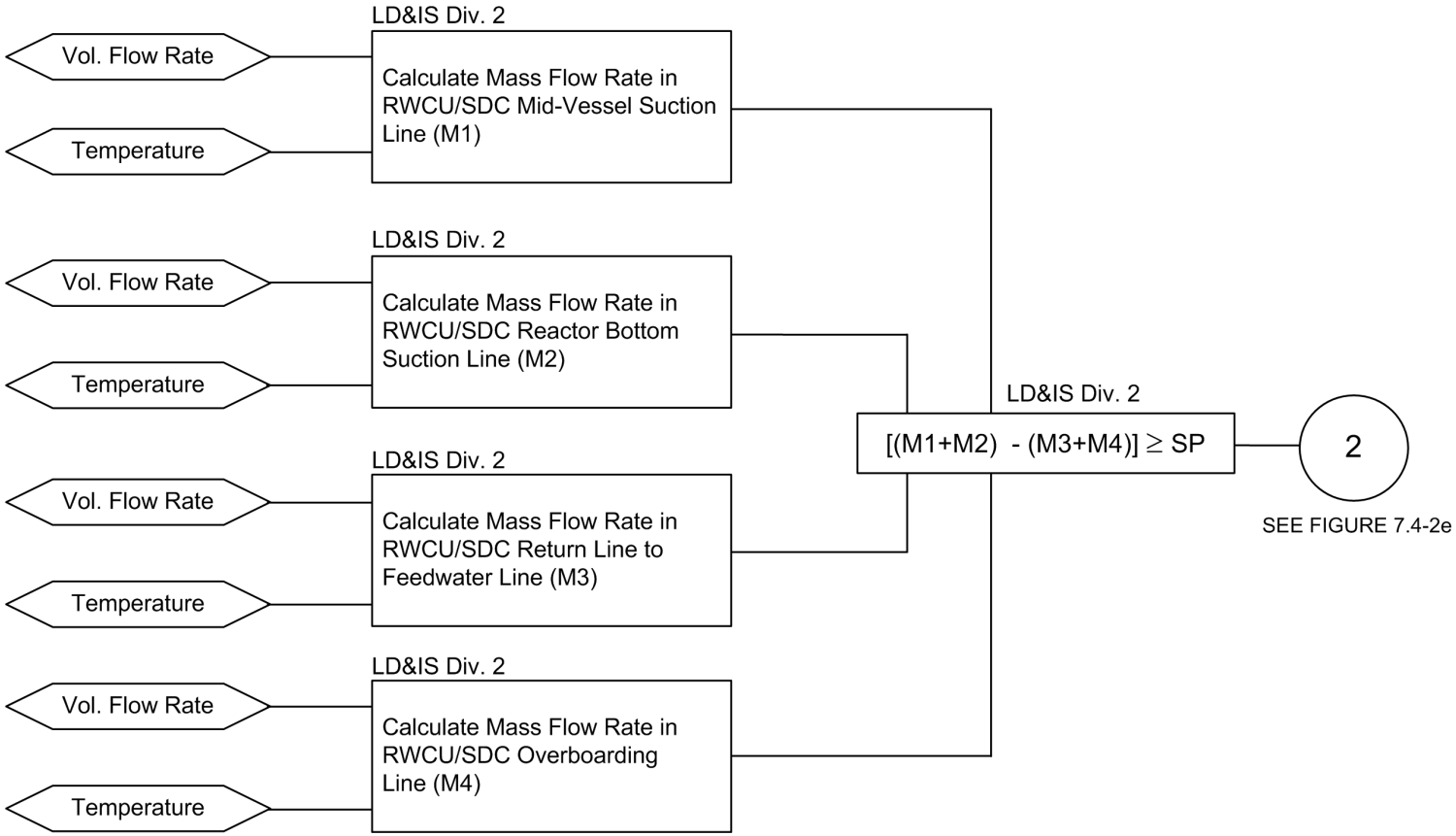

Figure 7.4-2c RWCU/SDC System Train A Differential Mass Flow Logic - Division 3 (Typical For Train B)

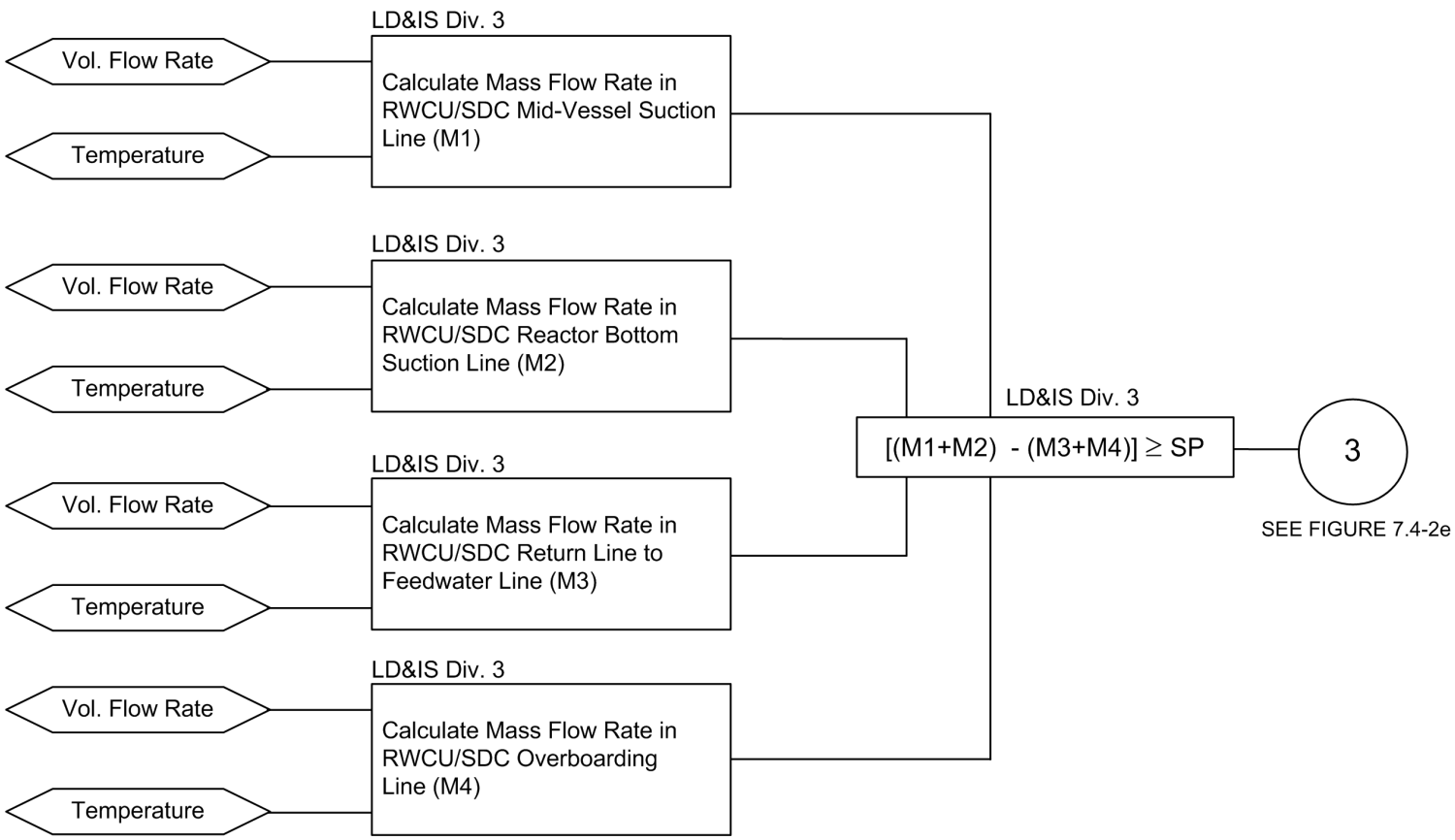

Figure 7.4-2d RWCU/SDC System Train A Differential Mass Flow Logic - Division 4 (Typical For Train B)

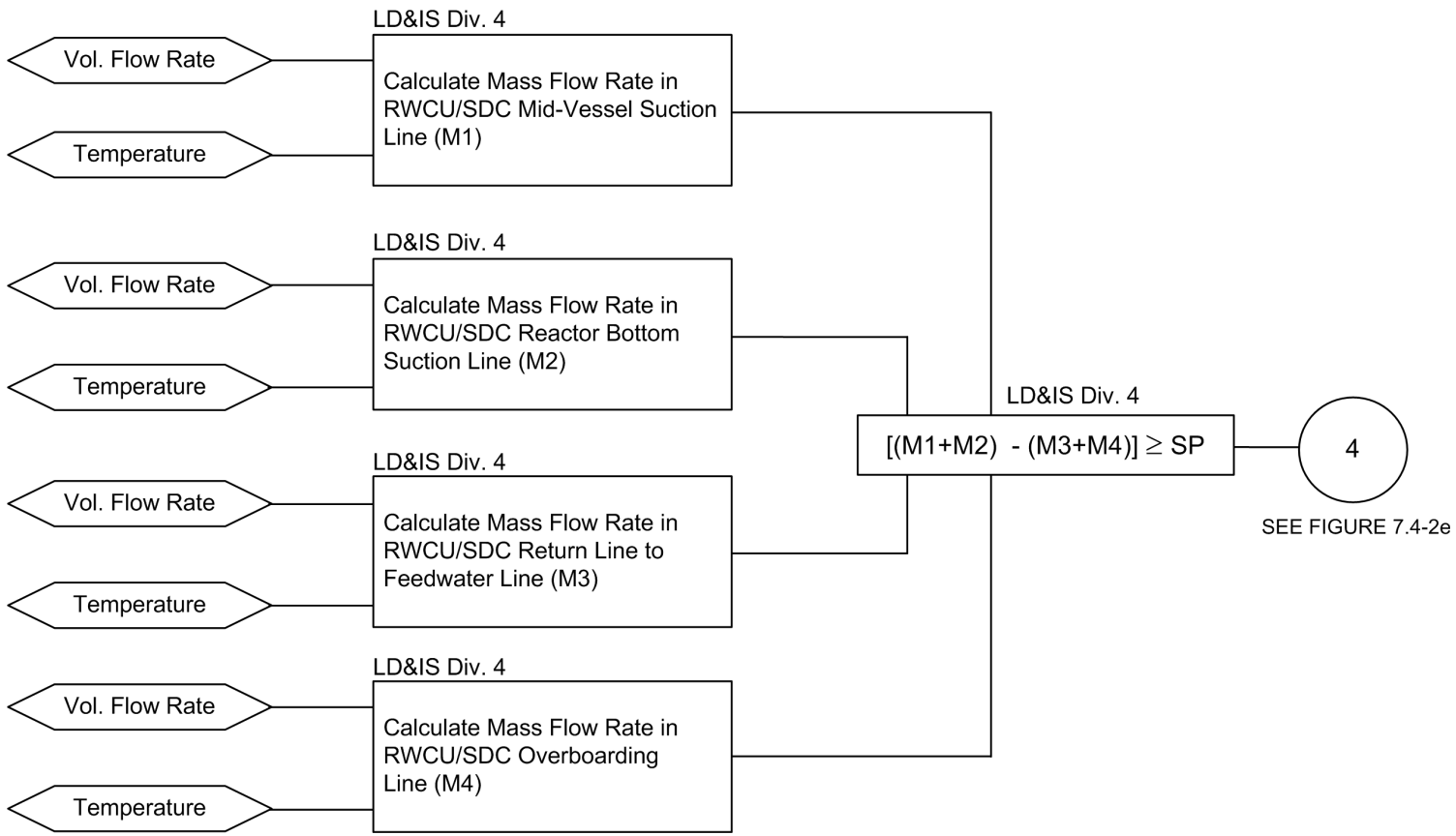

Figure 7.4-2e RWCU/SDC Line Break Outside Containment Train A Isolation Logic (Typical For Train B)

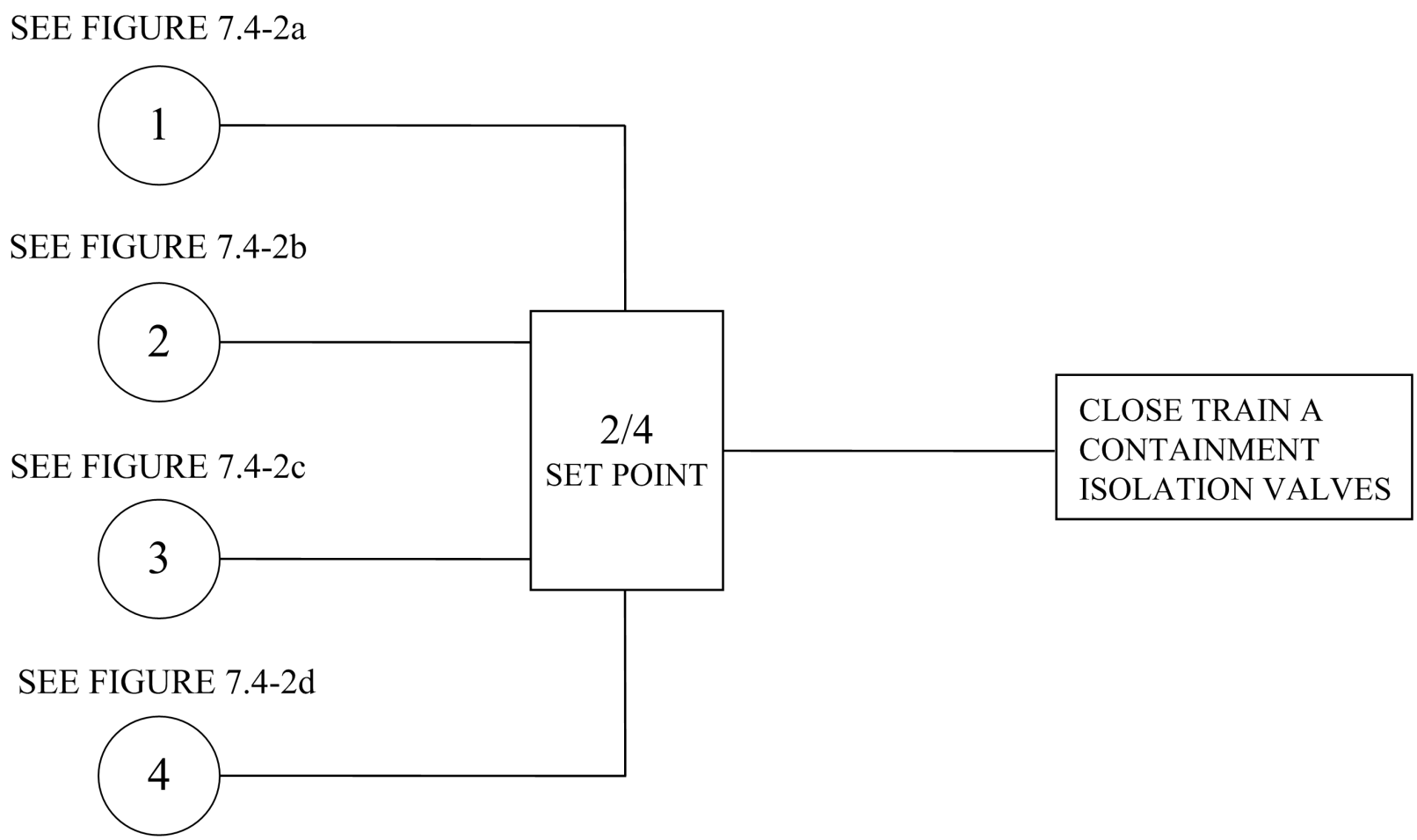

Figure 7.4-3 Isolation Condenser System Initiation and Actuation

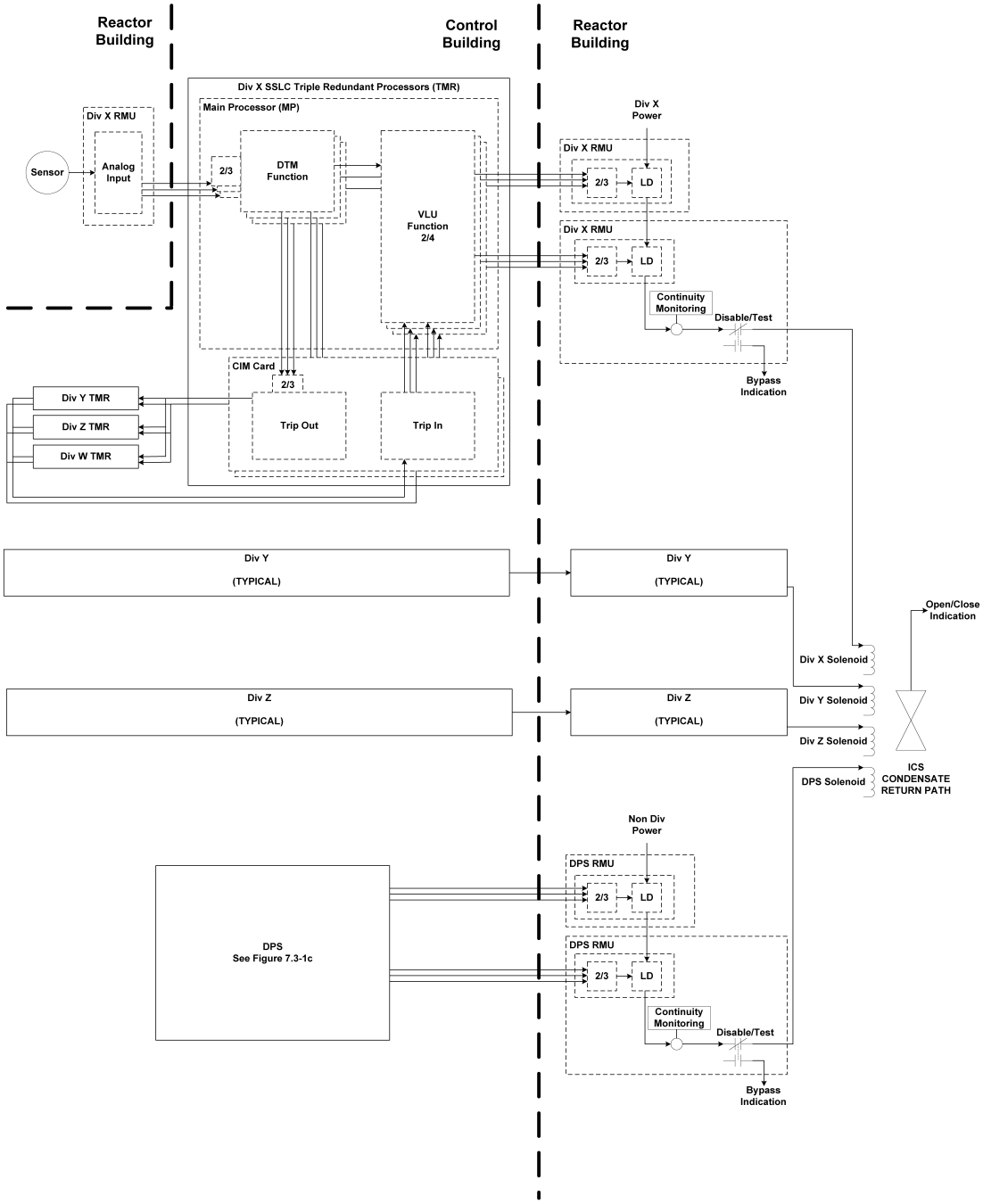

LEGEND: LD = Load Driver

7.5 Safety-Related and Nonsafety-Related Information Systems

This section discusses instrumentation associated with:

- Post-Accident Monitoring (PAM)
- Containment Monitoring System (CMS)
- Process Radiation Monitoring System (PRMS)
- Area Radiation Monitoring System (ARMS)
- Pool Monitoring Instrumentation

The safety-related portions of the PAM Instrumentation, CMS, PRMS, and Pool Monitoring Instrumentation are part of a group of instruments/equipment collectively called the Safety-Related Distributed Control and Information System (Q-DCIS). A simplified network functional diagram of the DCIS is included as Figure 7.1-1 (not all systems are shown on this figure).

This diagram depicts the relationships between safety-related system and its safety-related peers and nonsafety-related plant data systems called the Nonsafety-Related Distributed Control and Information System (N-DCIS). Section 7.1 contains a description of these relationships.

The nonsafety-related portions of the PAM instrumentation, CMS, PRMS, and the ARMS are part of the N-DCIS.

7.5.1 Post-Accident Monitoring Instrumentation

7.5.1.1 System Design Bases

The PAM instrumentation safety-related design bases are to:

- Provide instrumentation to monitor variables and systems over their anticipated ranges for accident conditions as appropriate to ensure adequate safety.
- Provide the appropriate Main Control Room (MCR) instrumentation and displays to provide the information from which actions can be taken to maintain a safe plant condition under accident conditions, including Loss-of-Coolant Accidents (LOCAs).
- Provide equipment (including the necessary instrumentation) at appropriate locations outside the MCR with the capability for prompt hot shutdown of the reactor.
- Provide the means for monitoring the reactor containment atmosphere spaces containing components that recirculate LOCA fluids, effluent discharge paths, and the plant environs for radioactivity that may be released as a result of accidents.

7.5.1.2 System Descriptions

The safety-related portions of the PAM systems are those systems that provide information for the safe operation of the plant during normal operation, Anticipated Operational Occurrences (AOOs)

and accidents, to help ensure performance of manual safety-related functions. The safety-related information systems:

- Include those systems that provide information for manual initiation and control of safety-related systems.
- Indicate that safety-related plant functions are being accomplished.
- Provide information, from which appropriate actions can be taken to mitigate the consequences of accidents.

The nonsafety-related portions of the PAM systems include the Safety Parameter Display System (SPDS), information systems associated with the emergency response facilities and the Emergency Response Data System (ERDS), none of which perform safety-related functions.

7.5.1.3 Safety Evaluation

PAM instrumentation conforms to regulatory requirements, guidelines, and industry standards.

7.5.1.3.1 Code of Federal Regulations

10 CFR 50.34(f)(2)(iii)[I.D.1], Human factors engineering principles applied to control room design:

- Conformance: The PAM design conforms to these requirements.

10 CFR 50.34(f)(2)(v)[I.D.3], Bypass and operable automatic status indication of safety systems:

- Conformance: The PAM instrumentation design conforms to these requirements. General conformance is discussed in Subsection 7.1.6.1, and specific conformance is identified in Table 7.1-1.

10 CFR 50.34(f)(2)(xvii)[II.F.1], Accident monitoring instrumentation and control room display requirements:

- Conformance: The PAM instrumentation design conforms to this requirement.

10 CFR 50.34(f)(2)(xviii)[II.F.2], Inadequate core cooling instrumentation and control room indication requirements:

- Conformance: The PAM instrumentation design conforms to this requirement. The direct water-level instrument system provides for the detection of conditions indicative of inadequate core cooling (Refer to Table 1A-1 of Appendix 1A, Three Mile Island [TMI] Action Plan Items).

10 CFR 50.34(f)(2)(xix)[II.F.3], Post-core damage accident plant condition monitoring requirements:

- Conformance: The PAM instrumentation design conforms to this requirement.

10 CFR 50.34(f)(2)(xxiv) [II.K.3.23], Reactor vessel water level measurement requirement under normal post-accident conditions:

- Conformance: The PAM instrumentation design conforms to this requirement. (Refer to Table 1A-1 of Appendix 1A TMI Action Plan Items).

10 CFR 50.34(f)(2)(xxvii)[III.D.3.3], Monitoring of inplant radiation and airborne radioactivity requirements under a broad range of routine and accident conditions:

- Conformance: The PAM design conforms to this requirement.

10 CFR 50.43(e), Innovative means of accomplishing safety functions:

- Conformance: When innovative means are used in the I&C design it complies with 10 CFR 50.43(e).

10 CFR 50.55a(a)(1), Quality standards for systems important to safety:

- Conformance: The PAM instrumentation design conforms to this requirement for the use of the applicable standards.

10 CFR 50.55a(h), Protection and safety systems compliance with IEEE Std. 603:

- Conformance: inter-divisional The PAM instrumentation design conforms to IEEE Std. 603. Conformance information is found in Subsections 7.1.6.6.1.1 through 7.1.6.6.1.27. Additional information concerning how the PAM conforms to IEEE Std. 603 is discussed below.
    - IEEE Std. 603, Section 4.2 (Safety-related Functions): See Subsection 7.5.1.1.
    - IEEE Std. 603, Section 4.3 (Permissive Conditions for Operating Bypasses): Permissive conditions for operating bypasses are not applicable for the PAM instrumentation design.
    - IEEE Std. 603, Section 4.6 (Spatially Dependent Variables): Spatial dependency of monitored variables is not applicable to PAM instrumentation design.
    - IEEE Std. 603, Section 5.2 (Completion of Protective Actions): The Post-Accident Monitoring system does not provide any trip or isolation functions.
    - IEEE Std. 603, Section 5.7 (Capability for Testing and Calibration): Testing and Calibration requirements are not applicable beyond that discussed in Subsection 7.1.6.6.1.8.
    - IEEE Std. 603, Sections 6.2 and 7.2 (Manual Control): Manual Control is not applicable beyond that discussed in Subsection 7.1.6.6.1.18.
    - IEEE Std. 603, Section 6.4 (Derivation of System Inputs): Derivation of System Inputs for PAM instrumentation is not applicable beyond that discussed in Subsection 7.1.6.6.1.20.
    - IEEE Std. 603, Section 6.5 (Capability of Testing and Calibration): Testing and Calibration requirements for PAM instrumentation design is not applicable beyond that discussed in Subsection 7.1.6.6.1.21.

- IEEE Std. 603, Sections 6.6 and 7.4 (Operating Bypasses): Operating bypasses for the PAM instrumentation design are not applicable beyond that discussed in Subsection 7.1.6.6.1.22.
- IEEE Std. 603, Sections 6.7 and 7.5 (Maintenance Bypass): Maintenance bypass for PAM instrumentation design are not applicable beyond that discussed in Subsection 7.1.6.6.1.23.
- IEEE Std. 603, Section 8.2 (Non-Electrical Power Sources): Non-Electrical power sources for PAM instrumentation design are not applicable beyond that discussed in Subsection 7.1.6.6.1.26.
- IEEE Std. 603, Section 8.3 (Maintenance Bypass): Maintenance bypass for PAM instrumentation design are not applicable beyond that discussed in Subsection 7.1.6.6.1.27.

10 CFR 52.47, Contents of applications; technical information, level of design information:

- Conformance: The level of detail provided for the PAM instrumentation within the DCD conforms to this requirement.

10 CFR 52.47(a)(21), Resolution of unresolved and generic (medium- and high-priority) safety issues identified in NUREG-0933:

- Conformance: Resolution of unresolved and generic safety issues is discussed in Section 1.11.

10 CFR 52.47(a)(25), Interface requirements for portions of the plant not within scope of certified design application:

- Conformance: There are no interface requirements for this section.

10 CFR 52.47(b)(1), ITAAC in design certification application:

- Conformance: ITAAC are provided for the Instrumentation and Control (I&C) systems and equipment in Tier 1.

10 CFR 52.47(c)(2), Innovative means to accomplish safety function design completeness requirements per 10 CFR 50.43(e):

- Conformance: The I&C design may use innovative means for accomplishing safety functions.

7.5.1.3.2 **General Design Criteria**

GDC 1, 2, 4, 13, 19, 24, 63, and 64:

- Conformance: The PAM instrumentation design conforms to these GDC.

7.5.1.3.3 Staff Requirements Memoranda

SRM on Item II.T of SECY 93-087:

- Conformance: The PAM instrumentation design conforms to these criteria. The systems to which this requirement applies are defined in Table 7.1-1. General conformance is discussed in Subsection 7.1.6.3, and specific conformance is identified in Table 7.1-1.

7.5.1.3.4 Regulatory Guides

RG 1.89, Environmental Qualification of Certain Electric Equipment Important to Safety for Nuclear Power Plants:

- Conformance: See Table 3.11-1 (Electrical and Mechanical Equipment for Environmental Qualification).

RG 1.97, Criteria for Accident Monitoring Instrumentation for Nuclear Power Plants:

- Conformance: The PAM instrumentation design conforms to RG 1.97, which endorses (with certain exceptions specified in Section C of the RG) IEEE Std. 497 that establishes flexible, performance-based criteria for the selection, performance, design, qualification, display, and quality assurance of accident monitoring variables. IEEE Std. 497 identifies five types of variables for accident monitoring and the criteria for the selection of each type of variable.

RG 1.100, Seismic Qualification of Electric and Mechanical Equipment for Nuclear Power Plants:

- Conformance: The PAM design conforms to RG 1.100. See Sections 3.9 (Mechanical Systems and Components) and 3.10 (Seismic and Dynamic Qualification of Mechanical and Electrical Equipment).

RG 1.152, Criteria for Use of Computers in Safety Systems of Nuclear Power Plants:

- Conformance: The PAM design conforms to RG 1.152.

RG 1.153, Criteria for Safety Systems:

- Conformance: The PAM instrumentation is designed to satisfy the requirements of IEEE Std. 603, as endorsed by RG 1.153.

RG 1.168, Verification, Validation, Reviews, and Audits for Digital Computer Software Used in Safety Systems of Nuclear Power Plants:

- Conformance: The PAM design conforms to RG 1.168.

RG 1.169, Configuration Management Plans for Digital Computer Software Used in Safety Systems of Nuclear Power Plants:

- Conformance: The PAM design conforms to RG 1.169.

RG 1.170, Software Test Documentation for Digital Computer Software Used in Safety Systems of Nuclear Power Plants:

- Conformance: The PAM design conforms to RG 1.170.

RG 1.171, Software Unit Testing for Digital Computer Software Used in Safety Systems of Nuclear Power Plants:

- Conformance: The PAM design conforms to RG 1.171.

RG 1.172, Software Requirements Specifications for Digital Computer Software Used in Safety Systems of Nuclear Power Plants:

- Conformance: The PAM design conforms to RG 1.172.

RG 1.173, Developing Software Life Cycle Processes for Digital Computer Software Used in Safety Systems of Nuclear Power Plants:

- Conformance: The PAM design conforms to RG 1.173.

RG 1.180, Guidelines for Evaluating Electromagnetic and Radio-Frequency Interference in Safety-Related Instrumentation and Control Systems:

- Conformance: The PAM instrumentation design conforms to RG 1.180. See Table 3.11-1 (Electrical and Mechanical Equipment for Environmental Qualification).

RG 1.209, Guidelines for Environmental Qualification of Safety-Related Computer-Based Instrumentation and Control Systems in Nuclear Power Plants:

- Conformance: See Table 3.11-1 (Electrical and Mechanical Equipment for Environmental Qualification).

Variable Types and Selection Criteria

The five variable types (A, B, C, D, E) and their selection criteria are defined in Section 4 and Table 1 of IEEE Std. 497. Table 1 summarizes the selection criteria for each variable type and the source documents such as plant accident analysis licensing basis, Emergency Procedure Guidelines (EPGs) or plant-specific Emergency Operating Procedures (EOPs) and Abnormal Operating Procedures (AOPs) related to the variable type.

The Functional Requirements Analysis (FRA) and Allocation of Functions (AOF) (Section 18.4) and Task Analysis (TA) (Section 18.5) address Critical Safety Functions, and provide an independent list of the required RG 1.97 parameters via their respective Results Summary Reports (RSRs). The FRA, AOF and TA are iteratively integrated into the design process to provide a final design that effectively balances human factors and system design.

The list of parameters, generated by the Human Factors Engineering (HFE) process, is compared with the information generated from the design process and the differences are entered into the Human Factors Engineering Issue Tracking System (HFEITS) for resolution. During the detailed (second iteration) TA, the RG 1.97 parameters are categorized into the five variable types.

When the EPG/ Severe Accident Guidelines (SAGs)/AOP guidelines are released, they are compared with the list of RG 1.97 parameters and the differences are entered into the HFEITS for resolution.

Performance Criteria

Performance criteria defined in IEEE Std. 497, Section 5 include:

- Range
- Accuracy
- Response time
- Required instrumentation duration
- Reliability
- Performance assessment documentation

RG 1.97 endorses IEEE Std. 497 Section 5, "Performance Criteria" with modification (the RG provides guidance on the application of these requirements).

Performance criteria (identified in IEEE Std. 497, Section 5) are developed during the design process using inputs from the HFE process together with other design and accident analysis inputs. The performance criteria (range, accuracy, response time, required instrument duration, and reliability) for each required variable are documented in the PAM Variable List.

Performance is verified to meet the as-designed performance criteria of Section 18.11, Human Factors Verification and Validation (HF V&V). Performance deviations are entered into the HFEITS for resolution. The results of this assessment are documented in the HF V&V RSR.

Design Criteria

The design criteria defined in IEEE Std. 497, Section 6, include:

- Single failure
- Common cause failure
- Independence and separation
- Isolation
- Information ambiguity
- Power supply
- Calibration
- Testability
- Direct measurement
- Control of access

- Maintenance and repair
- Minimizing measurements
- Auxiliary supporting features
- Portable instruments
- Documentation of design criteria

RG 1.97 endorses IEEE Std. 497 Section 6, "Design Criteria" with modification.

The design conforms to the specific criteria identified in IEEE Std. 497, Section 6. Each specific criterion is addressed and documented during the detailed design process using appropriate inputs from the licensing basis, the design process and the HFE process, as identified in Chapter 18.

Qualification Criteria

The design conforms to the requirements to qualify the instrumentation associated with the identified variables within each type (A, B, C, D, E) in accordance with the qualification criteria of IEEE Std. 497 Criteria, Section 7, "Qualification Criteria." Specific qualification requirements are developed during the design process for:

- Type A variables
- Type B variables
- Type C variables
- Type D variables
- Type E variables
- Portable instruments
- Post-event operating time
- Documentation

Display Criteria

The display criteria defined in IEEE Std. 497 Section 8 include:

- Information characteristics
- Human factors
- Anomalous indications
- Continuous vs. on-demand display
- Trend or rate information
- Display identification
- Type of monitoring channel display
- Display location

- Information ambiguity
- Recording
- Digital display signal validation
- Display criteria documentation

The design conforms to the specific display criteria identified in IEEE Std. 497, Section 8. Each specific criterion is addressed and documented during the detailed design process using appropriate inputs from the licensing basis, the design process and the HFE process, as identified in Chapter 18.

Display characteristics consistent with inputs from design, safety analysis, and HFE include:

- Range
- Accuracy
- Precision
- Display format
- Units
- Response time

The Distributed Control and Information System (DCIS) provides the required signal paths to process the information. The DCIS is subdivided into the Q-DCIS and the N-DCIS. These DCIS systems are described in Section 7.1.

For PAM instrumentation associated with Critical Safety Functions and powered from the safety-related sources, the Q-DCIS provides the required signal path to process data. This information then is shown on Q-DCIS divisional safety-related displays.

The safety-related information is also available to the N-DCIS, through the qualified safety-related isolation devices, for input to nonsafety-related displays, Plant Computer Functions (PCF) and the AMS. Type A, Type B, and Type C variables are powered from safety-related sources. For Type D and Type E variables that are powered from nonsafety-related sources the N-DCIS provides the required signal paths to process information.

The Q-DCIS has four separate divisions, each powered by a different safety-related AC uninterruptible power supply (UPS). The safety-related power is discussed in Subsection 8.3.1.1.3. The design complies with required instrument duration requirements of IEEE Std. 497, Section 5.4, as modified by RG 1.97.

The nonsafety-related AMS, SPDS, and BISI are discussed in Subsections 7.1.4 and 7.1.5. Subsection 7.1.5.3.3 discusses additional acceptance criteria applicable to annunciator systems (Item II.T of SECY-93-087). The PCF provides nonsafety-related navigational or top-level displays for safety parameter displays, alarms and annunciators, and bypass and inoperable status indicator

(BISI). The N-DCIS also provides data support functions (for example, Technical Support Center [TSC] and Emergency Operations Facility [EOF], and Emergency Response Data Systems [ERDS]).

Quality Assurance

All equipment is provided in accordance with the GEH 10 CFR 50 Appendix B Quality Assurance Program (Reference 7.5-1). The NRC accepted GEH Quality Assurance Program, along with its implementing procedures, constitute the Quality Assurance system that is applied to the safety-related I&C system design. It satisfies the requirements of:

- 10 CFR 50 Appendix B.
- American National Standards Institute (ANSI) / American Society of Mechanical Engineers (ASME) NQA-1.
- ISO 9001.

Post-Accident Monitoring Variable List Documentation

The PAM variable list is prepared as a separate document, using inputs from the design process, licensing design basis, and HFE process, including the development of the EPGs, EOPs and AOPs.

The PAM variable list document provides summary information for each PAM variable as applicable. Typical information provided includes:

- PAM variable name
- Type
- Range
- Extended range (Type C)
- Instrument channel accuracy
- Required instrument duration
- Power source
- Required number of channels
- Qualification criteria
- Type of monitoring channel display

7.5.1.3.5 Branch Technical Positions

BTP HICB-10, Guidance on Application of Regulatory Guide 1.97:

- Conformance: The PAM instrumentation design conforms to RG 1.97 Revision 4, IEEE Standard 497-2002 (with clarifications and exceptions stated in RG 1.97 Revision 4), and RG 1.100.

BTP HICB-16, Guidance on the Level of Detail Required for Design Certification Applications Under 10 CFR Part 52:

- Conformance: The level of detail provided for the PAM instrumentation design conforms to BTP HICB-16.

7.5.1.4 Testing and Inspection Requirements

Testing and inspection requirements for RG 1.97 instrumentation are defined in IEEE Std. 497, Criterion 6.8, "Testability" and Criterion 6.11, "Maintenance and Repair." Compliance with these requirements is addressed during the detailed design phase.

7.5.1.5 Instrumentation and Controls Requirements

Instrumentation requirements for RG 1.97 instrumentation are defined in IEEE Std. 497. Identification of specific instrument requirements and conformance to these requirements is addressed during the detailed design phase.

7.5.2 Containment Monitoring System

The CMS provides the instrumentation to monitor the:

- Atmosphere in the containment for high gross gamma radiation levels
- Pressure of the drywell and wetwell
- Drywell/wetwell differential pressure
- Lower and upper drywell water level (post-LOCA)
- Temperature of the suppression pool water
- Suppression pool water level
- Drywell/wetwell hydrogen/oxygen concentration levels
- Containment area radiation

These parameters are monitored during both normal reactor operations and post-accident conditions to evaluate the integrity and safe conditions of the containment. Abnormal measurements and indications initiate alarms in the MCR.

7.5.2.1 System Design Bases

The CMS design conforms to the following system design criteria.

- The CMS is classified as safety-related and Seismic Category 1 except as noted, and conforms to the relevant codes and standards specified in Table 7.1-1 for this system. IEEE Std. 603, Sections 4.5 and 5.8, apply to the safety-related portions of the CMS.
- The safety-related Hydrogen/Oxygen (H2/O2) analyzers are active during normal operation. Additional sampling capacity is automatically initiated by a LOCA signal for post-accident monitoring of oxygen and hydrogen content in the containment.
- Each CMS gas sampling subsystem monitors the atmospheric oxygen and hydrogen contents in the drywell and the wetwell, and provides measurements in the MCR in percent by volume for each of the sampled gases. Table 7.5-5 provides the instrument ranges for these parameters. Sampling of the drywell or the wetwell is initiated either manually (remotely or locally) or automatically.
- Dual redundant divisions of gas sampling and radiation monitoring are provided.
- Nonsafety-related radiation monitoring consists of two channels per division. Each radiation monitoring channel portion consists of a gamma sensitive Radiation Detection Assembly and a digital Signal Conditioning Unit. The Radiation Detection Assemblies are installed at widely separated locations to provide comprehensive coverage of the containment volume. The channels measure gross gamma radiation in the drywell and wetwell. The gross gamma radiation signals are provided to the MCR where they are continuously displayed. The channels are equipped with upscale alarms to indicate high radiation and an alarm to indicate channel malfunction.
- MCR alarms are provided for indications of high radiation dose rates, inoperative radiation monitors, high oxygen concentration levels, high hydrogen concentration levels, and abnormal samples for each subsystem.
- Each gas sampling rack is provided with its own gas calibration sources of known concentration levels to calibrate periodically the oxygen and hydrogen analyzers and the sensors.
- The lower drywell water level is monitored to indicate any increases in water level that may occur in the lower drywell following a LOCA condition.
- The upper drywell water level is also monitored and compared with the RPV nozzle elevations.
- The drywell and wetwell pressure instrumentation taps are located throughout the containment and the sensors located outside containment provide safety-related and nonsafety-related functions for both normal and post-accident monitoring, including drywell pressure inputs for reactor scram protection monitoring. In addition, pressure signals are provided to the Diverse Protection System (DPS) for diverse scram protection monitoring.

MCR alarms and indication are provided for suppression pool temperature monitoring as discussed in Subsection 7.2.3.

7.5.2.2 System Description

The CMS is a divisionalized and segregated (safety/nonsafety-related) monitoring system, and is configured as shown in Figure 7.5-1. The specific system features are as follows:

- Radiation monitoring and gas H_2/O_2 sampling are provided for the drywell and for the airspace above the suppression pool.
- Each radiation monitoring channel uses one gamma-sensitive ion chamber and one digital log radiation monitor. Four channels are provided, two for the drywell and two for the suppression pool (wetwell) airspace.
- During normal plant operation, both the radiation monitoring and gas sampling subsystems are operating. For post-accident monitoring, the gas sampling subsystem is automatically activated by the LOCA signal to alternate its sampling between the drywell and the wetwell. The area of sampling can be selected manually or sequentially controlled.
- Heat tracing is provided on the gas sampling lines for control of moisture and condensation.
- Two isolation valves are provided on each sample and return line that penetrates the containment. Each line has one valve inside containment and one valve outside containment.
- Each gas sampling analyzer has dual redundant pumps. One is used during normal operation; the other is used for added capacity or backup.
- Separate oxygen and hydrogen gas sources are provided in each CMS sampling rack with known compositions for monitor calibration.
- CMS piping connections are provided. Piping connections are required in order to connect the sampling instrumentation.
- The drywell pressure instrumentation taps are located throughout the containment and the sensors are located outside the containment.
- Four drywell pressure sensors are provided for safety-related signals for use by the Reactor Protection System (RPS) for reactor scram. Four additional safety-related drywell pressure signals are made available to the Leak Detection and Isolation System (LD&IS), where they are used to initiate isolation of containment valves, transfer pump suction, and initiate suppression pool cooling. The containment isolation function is discussed in Subsection 6.2.4.
- Four drywell water level sensors are provided as safety-related signals for use by the LD&IS for feedwater line isolation and FW ASD controller breaker trip.
- Two wide-range safety-related pressure sensors are used for providing safety-related drywell pressure information meeting the requirements of post-accident monitoring.

- Four nonsafety-related drywell pressure sensors are used by the DPS for diverse scram protection monitoring and by the Containment Inerting System (CIS) for controlling the position of the nitrogen makeup pressure control valve.
- The suppression pool water level is monitored during all plant operating conditions and post-accident conditions. Suppression pool water level monitoring consists of ten channels of water level detection sensors distributed into four safety-related narrow-range and four nonsafety-related wide-range instruments. The narrow-range suppression pool water level signals are used to detect the uncovering of the first set of suppression pool temperature sensors below the pool surface. When the suppression pool water level drops below the elevation of a particular set of temperature sensors, those sensor signals are not used in computing the average pool temperature.
- The wide range water level signals are available for displaying suppression pool water level on the Remote Shutdown System (RSS) Panels.
- Suppression pool temperatures are monitored (see Subsection 7.2.3).

7.5.2.3 Safety Evaluation

The CMS, including the sensors and the instrumentation channels, is designed into both safety-related and nonsafety-related subsystems. Safety-related systems are environmentally and seismically qualified for continuous monitoring during normal reactor operation, as well as during and after DBEs. The system design conforms to the System Design Bases.

Table 7.1-1 identifies the CMS and the associated regulatory requirements, guidelines, and codes and standards applied, in accordance with NUREG-0800. This subsection addresses I&C systems conformance to regulatory requirements, guidelines, and industry standards.

7.5.2.3.1 Code of Federal Regulations

10 CFR 50.34(f)(2)(iii)[I.D.1], Human factors engineering principles applied to control room design:

- Conformance: The CMS design conforms to these requirements.

10 CFR 50.34(f)(2)(v)[I.D.3], Bypass and operable automatic status indication of safety systems:

- Conformance: The CMS design conforms to these requirements.

10 CFR 50.34(f)(2)(viii)[II.B.3], Capability to obtain and analyze samples from the reactor coolant system and containment:

- Conformance: The CMS design complies with this requirement.

10 CFR 50.34(f)(2)(xvii)[II.F.1], Accident monitoring instrumentation and control room display requirements:

- Conformance: The CMS design conforms to this requirement.

10 CFR 50.34(f)(2)(xix)[II.F.3], Post-core damage accident plant condition monitoring requirements:

- Conformance: The CMS design complies with these requirements.

10 CFR 50.34(f)(2)(xxvii)[III.D.3.3], Monitoring of inplant radiation and airborne radioactivity requirements under a broad range of routine and accident conditions:

- Conformance: The CMS design conforms to this requirement.

10 CFR 50.43(e), Innovative means of accomplishing safety functions:

- Conformance: When innovative means are used in the I&C design it complies with 10 CFR 50.43(e).

10 CFR 50.44(c)(4), Monitoring requirements for oxygen in containments that use an inerted atmosphere for combustible gas control:

- Conformance: The CMS design conforms to this requirement.

10 CFR 50.49, Environmental qualification of electric equipment important to safety for nuclear power plants:

- Conformance: The CMS conforms to these requirements. See Table 3.11-1 (Electrical and Mechanical Equipment for Environmental Qualification).

10 CFR 50.55a(a)(1), Quality standards for systems important to safety:

- Conformance: The CMS design conforms to this requirement for the use of the applicable standards.

10 CFR 50.55a(h), Protection and safety systems compliance with IEEE Std. 603:

- Conformance: The CMS design conforms to IEEE Std. 603. Conformance information is found in Subsections 7.1.6.6.1 through 7.1.6.6.1.27. Additional information concerning how the CMS design conforms to IEEE Std. 603 is discussed below.
    - IEEE Std. 603, Section 4.2 (Safety-related Functions): See Subsection 7.5.2.1.
    - IEEE Std. 603, Section 4.3 (Permissive Conditions for Operating Bypasses): Permissive conditions for operating bypasses are not applicable for the CMS system.
    - IEEE Std. 603, Section 4.6 (Spatially Dependent Variables): See Subsection 7.5.2.2.
    - IEEE Std. 603, Section 5.2 (Completion of Protective Actions): Completion of Protective Actions is not applicable beyond that discussed in Subsection 7.1.6.6.1.3.
    - IEEE Std. 603, Section 5.7 (Capability for Testing and Calibration): See Subsection 7.5.2.1.
    - IEEE Std. 603, Sections 6.2 and 7.2 (Manual Control): See Subsections 7.5.2.1 and 7.5.2.2.

- IEEE Std. 603, Section 6.4 (Derivation of System Inputs): The CMS derives its sense and command features from direct measurements, see Subsection 7.5.2.2.
- IEEE Std. 603, Section 6.5 (Capability for Testing and Calibration): See Subsection 7.5.2.4.
- IEEE Std. 603, Sections 6.6 and 7.4 (Operating Bypasses): Operating bypasses for the CMS are not applicable.
- IEEE Std. 603, Sections 6.7 and 7.5 (Maintenance Bypasses): Maintenance bypasses for the CMS are not applicable.
- IEEE Std. 603, Section 8.2 (Non-Electrical Power Sources): Non-Electrical power sources for the CMS are not applicable beyond that discussed in Subsection 7.1.6.6.1.26.
- IEEE Std. 603, Section 8.3 (Maintenance Bypasses): Maintenance bypasses for the CMS are not applicable beyond that discussed in Subsection 7.1.6.6.1.27.

10 CFR 52.47, Contents of applications; technical information, level of design information:

- Conformance: The level of detail provided for the CMS within the DCD conforms to this requirement.

10 CFR 52.47(a)(21), Resolution of unresolved and generic (medium- and high-priority) safety issues identified in NUREG-0933:

- Conformance: Resolution of unresolved and generic safety issues is discussed in Section 1.11.

10 CFR 52.47(a)(25), Interface requirements for portions of the plant not within scope of certified design application:

- Conformance: There are no interface requirements for this section.

10 CFR 52.47(b)(1), ITAAC in design certification application:

- Conformance: ITAAC are provided for the I&C systems and equipment in Tier 1.

10 CFR 52.47(c)(2), Innovative means to accomplish safety function design completeness requirements per 10 CFR 50.43(e):

- Conformance: The I&C design may use innovative means for accomplishing safety functions.

7.5.2.3.2 General Design Criteria

GDC 1, 2, 4, 13, 19, 20, 21, 22, 23, 24, 29, 41, 43, and 64:

- Conformance: The CMS design complies with these GDC.

7.5.2.3.3 Staff Requirements Memoranda

SRM on Item II.Q of SECY 93-087:

- Conformance: The CMS design conforms to these criteria by implementation of diverse I&C as described in Section 7.8.

7.5.2.3.4 Regulatory Guides

RG 1.22, Periodic Testing of Protection System Actuation Functions:

- Conformance: The CMS design conforms to RG 1.22.

RG 1.45, Reactor Coolant Pressure Boundary Leakage Detection Systems:

- The CMS design conforms to RG 1.45.

RG 1.47, Bypassed and Inoperable Status Indication for Nuclear Power Plant Safety Systems:

- Conformance: The CMS design conforms to RG 1.47.

RG 1.53, Application of the Single Failure Criterion to Safety Systems:

- Conformance: The CMS is organized into four physically and electrically-isolated divisions that use the principle of independence and redundancy to conform to the single failure criterion as defined by IEEE Std. 379, Section 4, and IEEE Std. 603, Section 5.1; additionally, the design meets N-2 conditions. Analyses complying with IEEE Std. 379 will be used to confirm the safety-related system designs' conformance to the single failure criterion.

RG 1.75, Criteria for Independence of Electrical Safety Systems:

- Conformance: The CMS design conforms to RG 1.75 as described in Subsections 8.3.1.3 and 8.3.1.4.

RG 1.89, Environmental Qualification of Certain Electric Equipment Important to Safety for Nuclear Power Plants:

- Conformance: The CMS design conforms to RG 1.89. See Table 3.11-1 (Electrical and Mechanical Equipment for Environmental Qualification).

RG 1.97, Criteria for Accident Monitoring Instrumentation for Nuclear Power Plants:

- Conformance: The ESBWR I&C conforms to RG 1.97. Specific instruments credited for RG 1.97 compliance are determined as part of the HFE development process as discussed in Section 7.5.

RG 1.100, Seismic Qualification of Electric and Mechanical Equipment for Nuclear Power Plants:

- Conformance: The CMS design conforms to RG 1.100. See Sections 3.9 (Mechanical Systems and Components) and 3.10 (Seismic and Dynamic Qualification of Mechanical and Electrical Equipment).

RG 1.105, Setpoints for Safety-Related Instrumentation:

- Conformance: The safety-related portions of the CMS design conform to RG 1.105. Reference 7.5-2 provides a detailed description of the GEH setpoint methodology.

RG 1.118, Periodic Testing of Electric Power and Protection Systems:

- Conformance: Periodic testing of the protection systems is performed in accordance with IEEE Std. 338, as modified by RG 1.118.

RG 1.151, Instrument Sensing Lines:

- Conformance: The CMS design conforms to RG 1.151.

RG 1.152, Criteria for Use of Computers in Safety Systems of Nuclear Power Plants:

- Conformance: The CMS design conforms to RG 1.152.

RG 1.153, Criteria for Safety Systems:

- Conformance: The CMS is designed to satisfy the requirements of IEEE Std. 603, as endorsed by RG 1.153.

RG 1.168, Verification, Validation, Reviews, and Audits For Digital Computer Software Used In Safety Systems of Nuclear Power Plants:

- Conformance: The CMS design conforms to RG 1.168 as implemented on the SSLC/ESF platform.

RG 1.169, Configuration Management Plans For Digital Computer Software Used In Safety Systems of Nuclear Power Plants:

- Conformance: The CMS design conforms to RG 1.169 as implemented on the SSLC/ESF platform.

RG 1.170, Software Test Documentation For Digital Computer Software Used In Safety Systems of Nuclear Power Plants:

- Conformance: The CMS design conforms to RG 1.170 as implemented on the SSLC/ESF platform.

RG 1.171, Software Unit Testing For Digital Computer Software Used In Safety Systems:

- Conformance: The CMS design conforms to RG 1.171 as implemented on the SSLC/ESF platform.

RG 1.172, Software Requirements Specifications For Digital Computer Software Used In Safety Systems of Nuclear Power Plants:

- Conformance: The CMS design conforms to RG 1.172 as implemented on the SSLC/ESF platform.

RG 1.173, Developing Software Life Cycle Processes for Digital Computer Software Used in Safety Systems of Nuclear Power Plants:

- Conformance: The CMS design conforms to RG 1.173 as implemented on the SSLC/ESF platform.

RG 1.180, Guidelines for Evaluating Electromagnetic and Radio-Frequency Interference in Safety-Related Instrumentation and Control Systems:

- Conformance: The CMS design conforms to RG 1.180. See Table 3.11-1 (Electrical and Mechanical Equipment for Environmental Qualification).

RG 1.204, Guidelines for Lightning Protection of Nuclear Power Plants:

- Conformance: The CMS design conforms to RG 1.204.

RG 1.209, Guidelines for Environmental Qualification of Safety-Related Computer-Based Instrumentation and Control System in Nuclear Power Plants.

- Conformance: The CMS design conforms to RG 1.209. See Table 3.11-1 (Electrical and Mechanical Equipment for Environmental Qualification).

7.5.2.3.5 **Branch Technical Positions**

BTP HICB-8, Guidance for Application of Regulatory Guide 1.22:

- Conformance: The CMS design conforms to BTP HICB-8.

BTP HICB-10, Guidance on Application of Regulatory Guide 1.97:

- Conformance: The ESBWR I&C conforms to RG 1.97. Specific instruments credited for RG 1.97 compliance are determined as part of the HFE development process as discussed in Section 7.5.

BTP HICB-11, Guidance on Application and Qualification of Isolation Devices:

- Conformance: The CMS design conforms to BTP HICB-11. SSLC/ESF logic controllers for the CMS use safety-related fiber-optic CIMs and fiber-optic cables for interconnections between safety-related divisions for data exchange and for interconnections between safety-related and nonsafety-related devices.

BTP HICB-12, Guidance on Establishing and Maintaining Instrument Setpoints:

- Conformance: The CMS design conforms to BTP HICB-12.

BTP HICB-14, Guidance on Software Reviews for Digital Computer-Based Instrumentation and Control Systems:

- Conformance: The CMS design conforms to BTP HICB-14.

BTP HICB-16, Guidance on the Level of Detail Required for Design Certification Applications Under 10 CFR Part 52:

- Conformance: The level of detail provided for the CMS design conforms to BTP HICB-16.

BTP HICB-17, Guidance on Self-Test and Surveillance Test Provisions:

- Conformance: The CMS design conforms to BTP HICB-17.

BTP HICB-19, Guidance for Evaluation of Defense-in-Depth and Diversity in Digital Computer-Based Instrumentation and Control Systems:

- Conformance: The CMS design conforms to BTP HICB-19. The implementation of an additional diverse instrumentation and control system is described in Section 7.8.

BTP HICB-21, Guidance on Digital Computer Real-Time Performance:

- Conformance: The CMS design conforms to BTP HICB-21.

Subsection 7.3.5.3.5 provides a discussion of BTP HICB-14, BTP HICB-17, and BTP HICB-21 in conjunction with the SSLC/ESF system.

7.5.2.3.6 Three Mile Island Action Plan Requirements

In accordance with SRP 7.5, and with Table 7.1-1, 10 CFR 50.34(f)(2)(v) [I.D.3], 10 CFR 50.34(f)(2)(xvii) [II.F.1],10 CFR 50.34(f)(2)(viii) [II.B.3], and 10 CFR 50.34(f)(2)(xix) [II.F.3] apply to the CMS. In addition, 10 CFR 50.34(f)(2)(xxvii) [III.D.3.3], also applies. The CMS complies with these requirements, as indicated above. TMI action plan requirements are addressed generically in Appendix 1A.

7.5.2.4 Testing and Inspection Requirements

In-service and Surveillance Testing: In-service testing is performed periodically on each CMS subsystem to verify operability and to ensure its readiness status for post-accident monitoring. Surveillance testing includes instrument channel checks of the radiation and gas monitors, functional tests to verify equipment operability, sensor calibration and response tests, and leakage tests of the gas sampling lines.

Validation Test of the Calibrated Gas Sources: Tests are conducted on the gas calibration sources to verify equipment operability and to certify that the required gas concentration levels are within acceptable limits.

Specific Channel Calibration Checks: Each radiation monitoring channel is checked and calibrated using a known gamma radiation source. Channel response is checked for proper measurement and display and for alarm initiation.

Each oxygen and hydrogen gas-sampling channel is checked for proper calibration and response using at least two input gas levels (Refer to Table 7.5-4).

Sample Gas Leakage Tests: The design leakage from the sampling lines and associated gas analyzer panel is specified in Table 7.5-4.

7.5.2.5 Instrumentation and Control Requirements

Radiation Level Monitoring: Each compartment in containment is monitored by two-divisional channels for gross gamma radiation levels. Each channel consists of an ion chamber detector and a digital log radiation monitor, with trip circuits set for high radiation and low/inoperable indications.

Oxygen/Hydrogen Concentration Monitoring: Two divisional racks for analysis and measurement sample the oxygen/hydrogen concentration levels in each compartment of the containment. The range of measurement of hydrogen and oxygen contents is displayed in percent (by volume) for the inerted containment. Separate gas indicators for measurement of oxygen and hydrogen content are provided in the MCR for each CMS subsystem. Trip circuits for alarm initiation are set for high oxygen and hydrogen concentration levels and for abnormal sampling flow indication.

7.5.3 Process Radiation Monitoring System

The PRMS provides the instrumentation for radiological monitoring, sampling and analysis of the:

- Turbine Building
- TSC
- Radwaste Building
- Control Building
- Reactor Building
- Fuel Building
- Reactor Building/Fuel Building Stack
- Turbine Building Stack
- Radwaste Building Stack

The PRMS alerts operators when radiation levels exceed preset limits and initiates automatically the required protective action to isolate, contain or redirect radioactivity releases from the environs. See Subsection 11.5.1.1.2 for process and effluent paths or areas with the potential for excessive radiation levels.

The system is configured as shown in Figure 11.5-1 and Table 11.5-3.

7.5.3.1 Design Bases

The design bases are provided in Section 11.5.

7.5.3.2 System Description

The system description is provided in Section 11.5.

7.5.3.3 Safety Evaluation

The safety-related PRMS, including the sensors and the instrumentation channels, is environmentally and seismically qualified for continuous monitoring during reactor operation as well as abnormal and accident plant conditions.

Table 7.1-1 identifies the PRMS and the associated regulatory requirements, guidelines and codes and standards applied, in accordance with NUREG-0800. This subsection addresses I&C systems conformance to regulatory requirements, guidelines, and industry standards.

7.5.3.3.1 Code of Federal Regulations

10 CFR 50.34(f)(2)(iii)[I.D.1], Human factors engineering principles applied to control room design:

- Conformance: The PRMS design conforms to these requirements.

10 CFR 50.34(f)(2)(v)[I.D.3], Bypass and operable automatic status indication of safety systems:

- Conformance: The PRMS design conforms to these requirements.

10 CFR 50.34(f)(2)(xvii)[II.F.1], Accident monitoring instrumentation and control room display requirements:

- Conformance: The PRMS design conforms to this requirement.

10 CFR 50.34(f)(2)(xix)[II.F.3], Post-core damage accident plant condition monitoring requirements:

- Conformance: The PRMS design conforms to these requirements.

10 CFR 50.34(f)(2)(xxvii)[III.D.3.3], Monitoring of inplant radiation and airborne radioactivity requirements under a broad range of routine and accident conditions:

- Conformance: The PRMS design conforms to this requirement.

10 CFR 50.34(f)(2)(xxviii)[III.D.3.4], Control room habitability design requirements due to pathways for radiation and radioactivity under accident conditions:

- Conformance: The PRMS design conforms to these requirements.

10 CFR 50.43(e), Innovative means of accomplishing safety functions:

- Conformance: When innovative means are used in the I&C design it complies with 10 CFR 50.43(e).

10 CFR 50.49, Environmental qualification of electric equipment important to safety for nuclear power plants:

- Conformance: The PRMS conforms to these requirements. See Table 3.11-1 (Electrical and Mechanical Equipment for Environmental Qualification).

10 CFR 50.55a(a)(1), Quality standards for systems important to safety:

- Conformance: The PRMS design conforms to this requirement for the use of the applicable standards.

10 CFR 50.55a(h), Protection and safety systems compliance with IEEE Std. 603:

- Conformance: The PRMS design conforms to IEEE Std. 603. Conformance information is found in Subsections 7.1.6.6.1 through 7.1.6.6.1.27. Additional information concerning how the SLC conforms to IEEE Std. 603 is discussed below.
    - IEEE Std. 603, Section 4.2 (Safety-related Functions): See Subsection 11.5.1.1.1.
    - IEEE Std. 603, Section 4.3 (Permissive Conditions for Operating Bypasses): Permissive conditions for operating bypasses are not applicable for the PRMS system.
    - IEEE Std. 603, Section 4.6 (Spatially Dependent Variables): Spatial dependency of monitored variables is not applicable to PRMS.
    - IEEE Std. 603, Section 5.2 (Completion of Protective Actions): Completion of Protective Actions are not applicable beyond that discussed in Subsection 7.1.6.6.1.3.
    - IEEE Std. 603, Section 5.7 (Capability for Test and Calibration): See Subsections 11.5.6.1, 11.5.6.2, and 11.5.6.3.
    - IEEE Std. 603, Section 6.2 and 7.2 (Manual Control): See Subsection 7.5.3.3.3.
    - IEEE Std. 603, Section 6.4 (Derivation of System Inputs): The PRMS derives its sense and command features from direct measurements.
    - IEEE Std. 603, Section 6.5 (Capability of Test and Calibration): See Subsections 11.5.6.1, 11.5.6.2, and 11.5.6.3.
    - IEEE Std. 603, Sections 6.6 and 7.4 (Operating Bypasses): Operating bypasses for the PRMS are not applicable beyond that discussed in Subsection 7.1.6.6.1.22.
    - IEEE Std. 603, Sections 6.7 and 7.5 (Maintenance Bypasses): Maintenance bypasses for the PRMS are not applicable beyond that discussed in Subsection 7.1.6.6.1.23.
    - IEEE Std. 603, Section 8.2 (Non-Electrical Power Sources): Non-Electrical power sources for the PRMS are not applicable beyond that discussed in Subsection 7.1.6.6.1.26.
    - IEEE Std. 603, Section 8.3 (Maintenance Bypasses): Maintenance bypasses for the PRMS are not applicable beyond that discussed in Subsection 7.1.6.6.1.27.

10 CFR 52.47, Contents of applications; technical information, level of design information:

- Conformance: The level of detail provided for the PRMS within the DCD conforms to this requirement.

10 CFR 52.47(a)(21), Resolution of unresolved and generic (medium- and high-priority) safety issues identified in NUREG-0933:

- Conformance: Resolution of unresolved and generic safety issues is discussed in Section 1.11.

10 CFR 52.47(a)(25), Interface requirements for portions of the plant not within scope of certified design application:

- Conformance: There are no interface requirements for this section.

10 CFR 52.47(b)(1), ITAAC in design certification application:

- Conformance: ITAAC are provided for the I&C systems and equipment in Tier 1.

10 CFR 52.47(c)(2), Innovative means to accomplish safety function design completeness requirements per 10 CFR 50.43(e):

- Conformance: The I&C design may use innovative means for accomplishing safety functions.

7.5.3.3.2 General Design Criteria

GDC 1, 2, 4, 13, 19, 20, 21, 22, 23, 24, 29, and 64:

- Conformance: The PRMS design complies with these GDC.

7.5.3.3.3 Staff Requirements Memoranda

SRM on Item II.Q of SECY 93-087:

- Conformance: The PRMS design conforms to these criteria.

7.5.3.3.4 Regulatory Guides

RG 1.22, Periodic Testing of Protection System Actuation Functions:

- Conformance: The PRMS design conforms to RG 1.22.

RG 1.45, Reactor Coolant Pressure Boundary Leakage Detection Systems:

- Conformance: The PRMS design conforms to RG 1.45.

RG 1.47, Bypassed and Inoperable Status Indication for Nuclear Power Plant Safety Systems:

- Conformance: The PRMS design conforms to RG 1.47.

RG 1.53, Application of the Single Failure Criterion to Safety Systems:

- Conformance: The PRMS is organized into four physically and electrically-isolated divisions that use the principle of independence and redundancy to conform to the single failure criterion as defined by IEEE Std. 379, Section 4, and IEEE Std. 603, Section 5.1; additionally, the design meets N-2 conditions. Analyses complying with IEEE Std. 379 will be used to confirm the safety-related system designs' conformance to the single failure criterion.

RG 1.75, Criteria for Independence of Electrical Safety Systems:

- Conformance: The PRMS design conforms to RG 1.75 as described in Subsections 8.3.1.3 and 8.3.1.4.

RG 1.89, Environmental Qualification of Certain Electric Equipment Important to Safety for Nuclear Power Plants:

- Conformance: The PRMS design conforms to RG 1.89. See Table 3.11-1 (Electrical and Mechanical Equipment for Environmental Qualification).

RG 1.97, Criteria for Accident Monitoring Instrumentation for Nuclear Power Plants:

- Conformance: The ESBWR I&C conforms to RG 1.97. Specific instruments credited for RG 1.97 compliance are determined as part of the HFE development process as discussed in Section 7.5.

RG 1.100, Seismic Qualification of Electric and Mechanical Equipment for Nuclear Power Plants:

- Conformance: The PRMS design conforms to RG 1.100. See Sections 3.9 (Mechanical Systems and Components) and 3.10 (Seismic and Dynamic Qualification of Mechanical and Electrical Equipment).

RG 1.105, Setpoints for Safety-Related Instrumentation:

- Conformance: The safety-related portions of the PRMS design conform to RG 1.105. Reference 7.5-2 provides a detailed description of the GEH setpoint methodology.

RG 1.118, Periodic Testing of Electric Power and Protection Systems:

- Conformance: Periodic testing of the protection systems is performed in accordance with IEEE Std. 338, as modified by RG 1.118.

RG 1.152, Criteria for Use of Computers in Safety Systems of Nuclear Power Plants:

- Conformance: The PRMS design conforms to RG 1.152.

RG 1.153, Criteria for Safety Systems:

- Conformance: The PRMS is designed to satisfy the requirements of IEEE Std. 603, as endorsed by RG 1.153.

RG 1.168, Verification, Validation, Reviews, and Audits For Digital Computer Software Used In Safety Systems of Nuclear Power Plants:

- Conformance: The PRMS design conforms to RG 1.168 as implemented on the SSLC/ESF platform.

RG 1.169, Configuration Management Plans For Digital Computer Software Used In Safety Systems of Nuclear Power Plants:

- Conformance: The PRMS design conforms to RG 1.169 as implemented on the SSLC/ESF platform.

RG 1.170, Software Test Documentation For Digital Computer Software Used In Safety Systems of Nuclear Power Plants:

- Conformance: The PRMS design conforms to RG 1.170 as implemented on the SSLC/ESF platform.

RG 1.171, Software Unit Testing For Digital Computer Software Used In Safety Systems:

- Conformance: The PRMS design conforms to RG 1.171 as implemented on the SSLC/ESF platform.

RG 1.172, Software Requirements Specifications For Digital Computer Software Used In Safety Systems of Nuclear Power Plants:

- Conformance: The PRMS design conforms to RG 1.172 as implemented on the SSLC/ESF platform.

RG 1.173, Developing Software Life Cycle Processes for Digital Computer Software Used in Safety Systems of Nuclear Power Plants:

- Conformance: The PRMS design conforms to RG 1.173 as implemented on the SSLC/ESF platform.

RG 1.180, Guidelines for Evaluating Electromagnetic and Radio-Frequency Interference in Safety-Related Instrumentation and Control Systems:

- Conformance: The PRMS design conforms to RG 1.180. See Table 3.11-1 (Electrical and Mechanical Equipment for Environmental Qualification).

RG 1.204, Guidelines for Lightning Protection of Nuclear Power Plants:

- Conformance: The PRMS design conforms to RG 1.204.

RG 1.209, Guidelines for Environmental Qualification of Safety-Related Computer-Based Instrumentation and Control Systems in Nuclear Power Plants:

- Conformance: The PRMS design conforms to RG 1.209. See Table 3.11-1 (Electrical and Mechanical Equipment for Environmental Qualification).

7.5.3.3.5 **Branch Technical Positions**

BTP HICB-8, Guidance for Application of Regulatory Guide 1.22:

- Conformance: The PRMS design conforms to BTP HICB-8.

BTP HICB-10, Guidance on Application of Regulatory Guide 1.97:

- Conformance: The ESBWR I&C conforms to RG 1.97. Specific instruments credited for RG 1.97 compliance are determined as part of the HFE development process as discussed in Section 7.5.

BTP HICB-11, Guidance on Application and Qualification of Isolation Devices:

- Conformance: The PRMS design conforms to BTP HICB-11. SSLC/ESF logic controllers for the PRMS use safety-related fiber-optic CIMs and fiber-optic cables for interconnections between safety-related divisions for data exchange and for interconnections between safety-related and nonsafety-related devices.

BTP HICB-12, Guidance on Establishing and Maintaining Instrument Setpoints:

- Conformance: The PRMS design conforms to BTP HICB-12.

BTP HICB-14, Guidance on Software Reviews for Digital Computer-Based Instrumentation and Control Systems:

- Conformance: The PRMS design conforms to BTP HICB-14.

BTP HICB-16, Guidance on the Level of Detail Required for Design Certification Applications Under 10 CFR Part 52:

- Conformance: The level of detail provided for the PRMS design conforms to BTP HICB-16.

BTP HICB-17, Guidance on Self-Test and Surveillance Test Provisions:

- Conformance: The PRMS design conforms to BTP HICB-17.

BTP HICB-19, Guidance for Evaluation of Defense-in-Depth and Diversity in Digital Computer-Based Instrumentation and Control Systems:

- Conformance: The PRMS design complies with BTP HICB-19.

BTP HICB-21, Guidance on Digital Computer Real-Time Performance:

- Conformance: The PRMS design conforms to BTP HICB-21.

BTP HICB-14, BTP HICB-17, BTP HICB-18, and BTP HICB-21 are addressed in conjunction with the SSLC/ESF in Subsection 7.3.5.3.5.

7.5.3.3.6 Three Mile Island Action Plan Requirements

In accordance with SRP 7.5 and with Table 7.1-1, 10 CFR 50.34(f)(2)(v)[I.D.3], 10 CFR 50.34(f)(2)(xvii)[II.F.1], 10 CFR 50.34(f)(2)(xxvii)[III.D.3.3], and 10 CFR 50.34(f)(2)(xix)[II.F.3] apply to the PRMS. The PRMS conforms to these requirements, as indicated above. TMI action plan requirements are generically addressed in Appendix 1A.

7.5.3.4 Testing and Inspection Requirements

The capability for testing and calibration is discussed in Subsections 11.5.6.1, 11.5.6.2, and 11.5.6.3 and conforms to the requirements of IEEE Std. 603, Sections 5.7 and 6.5.

7.5.3.5 Instrumentation and Control Requirements

I&C requirements are provided in Subsections 11.5.2.1, 11.5.2.2, 11.5.3.1 and 11.5.3.2.

7.5.4 Area Radiation Monitoring System

The primary function of the nonsafety-related ARMS is to continuously monitor the gamma radiation levels throughout the plant and to provide an early warning that predetermined radiation levels are exceeded. The ARMS consists of area radiation detectors located at accessible areas of the plant and utilizes local and MCR alarms for immediate warning. The gross gamma radiation levels are monitored on a continuous basis, because changes are caused by operational transients or maintenance activities. Any high and very high radiation levels are indicated by audible area alarms and MCR alarms.

A functional block diagram of the ARMS is shown in Figure 7.5-3.

7.5.4.1 Design Bases

The ARMS continuously measures, indicates, and records area radiation levels.

7.5.4.2 System Description

A design description of this system, together with detector locations, channel ranges, and alarm requirements, is covered in Subsection 12.3.4.

7.5.4.3 Safety Evaluation

The ARMS design, including the sensors and the instrumentation channels, is a nonsafety-related system designed for continuous monitoring during normal operation, as well as AOOs and plant accidents. The system design conforms to the System Design Bases.

Table 7.1-1 identifies the ARMS and the associated regulatory requirements, guidelines and codes and standards applied, in accordance with NUREG-0800. This subsection addresses I&C systems conformance to regulatory requirements, guidelines, and industry standards.

7.5.4.3.1 Code of Federal Regulations

10 CFR 50.34(f)(2)(iii) [I.D.1], Human factors engineering principles applied to control room design:

- Conformance: The ARMS design conforms to these requirements.

10 CFR 50.34(f)(2)(xvii)[II.F.1], Accident monitoring instrumentation and control room display requirements:

- Conformance: The ARMS design conforms to this requirement.

10 CFR 50.34(f)(2)(xviii)[II.F.2], Inadequate core cooling instrumentation and control room indication requirements:

- Conformance: ARMS design conforms to these requirements.

10 CFR 50.34(f)(2)(xxvii)[III.D.3.3], Monitoring of inplant radiation and airborne radioactivity requirements under a broad range of routine and accident conditions:

- Conformance: The ARMS design conforms to this requirement.

10 CFR 50.34(f)(2)(xix)[II.F.3], Post-core damage accident plant condition monitoring requirements:

- Conformance: The ARMS design conforms to this requirement.

10 CFR 50.34(f)(2)(xxiv)[II.K.3.23], Reactor vessel water level measurement requirement under normal post-accident conditions:

- Conformance: The ARMS design conforms to these requirements.

10 CFR 50.43(e), Innovative means of accomplishing safety functions:

- Conformance: When innovative means are used in the I&C design it complies with 10 CFR 50.43(e).

10 CFR 50.55a(a)(1), Quality standards for systems important to safety:

- Conformance: The ARMS design conforms to these standards.

10 CFR 52.47, Contents of applications; technical information, level of design information:

- Conformance: The level of detail provided for the ARMS within the DCD conforms to this requirement.

10 CFR 52.47(a)(21), Resolution of unresolved and generic (medium- and high-priority) safety issues identified in NUREG-0933:

- Conformance: Resolution of unresolved and generic safety issues is discussed in Section 1.11.

10 CFR 52.47(a)(25), Interface requirements for portions of the plant not within scope of certified design application:

- Conformance: There are no interface requirements for this section.

10 CFR 52.47(b)(1), ITAAC in design certification application:

- Conformance: ITAAC are provided for the I&C systems and equipment in Tier 1.

10 CFR 52.47(c)(2), Innovative means to accomplish safety function design completeness requirements per 10 CFR 50.43(e):

- Conformance: The ARMS design may use innovative means for accomplishing safety functions.

7.5.4.3.2 General Design Criteria

GDC 1, 2, 4, 13, 19, 24, 63, and 64:

- Conformance: The ARMS design conforms to these GDC.

7.5.4.3.3 Regulatory Guides

RG 1.89, Environmental Qualification of Certain Electric Equipment Important to Safety for Nuclear Power Plants:

- Conformance: See Table 3.11-1 (Electrical and Mechanical Equipment for Environmental Qualification).

RG 1.97, Criteria for Accident Monitoring Instrumentation for Nuclear Power Plants:

- Conformance: The ESBWR I&C conforms to RG 1.97. Specific instruments credited for RG 1.97 compliance are determined as part of the HFE development process as discussed in Section 7.5.

RG 1.100, Seismic Qualification of Electric and Mechanical Equipment for Nuclear Power Plants:

- Conformance: See Sections 3.9 (Mechanical Systems and Components) and 3.10 (Seismic and Dynamic Qualification of Mechanical and Electrical Equipment).

RG 1.152, Criteria for Use of Computers in Safety Systems of Nuclear Power Plants:

- Conformance: The ARMS design conforms to RG 1.152.

RG 1.168, Verification, Validation, Reviews, and Audits for Digital Computer Software Used in Safety Systems of Nuclear Power Plants:

- Conformance: The ARMS design conforms to RG 1.168.

RG 1.169, Configuration Management Plans for Digital Computer Software Used in Safety Systems of Nuclear Power Plants:

- Conformance: The ARMS design conforms to RG 1.169.

RG 1.170, Software Test Documentation for Digital Computer Software Used in Safety Systems of Nuclear Power Plants:

- Conformance: The ARMS design conforms to RG 1.170.

RG 1.171, Software Unit Testing for Digital Computer Software Used in Safety Systems of Nuclear Power Plants:

- Conformance: The ARMS design conforms to RG 1.171.

RG 1.172, Software Requirements Specifications for Digital Computer Software Used in Safety Systems of Nuclear Power Plants:

- Conformance: The ARMS design conforms to RG 1.172.

RG 1.173, Developing Software Life Cycle Processes for Digital Computer Software Used in Safety Systems of Nuclear Power Plants:

- Conformance: The ARMS design conforms to RG 1.173.

RG 1.180, Guidelines for Evaluating Electromagnetic and Radio-Frequency Interference in Safety-Related Instrumentation and Control Systems:

- Conformance: The ARMS design conforms to RG 1.180. See Table 3.11-1 (Electrical and Mechanical Equipment for Environmental Qualification).

RG 1.209, Guidelines for Environmental Qualification of Safety-Related Computer-Based Instrumentation and Control Systems in Nuclear Power Plants:

- Conformance: See Table 3.11-1 (Electrical and Mechanical Equipment for Environmental Qualification).

7.5.4.3.4 Branch Technical Positions

BTP HICB-10, Guidance on Application of Regulatory Guide 1.97:

- Conformance: The ESBWR I&C conforms to RG 1.97. Specific instruments credited for RG 1.97 compliance are determined as part of the HFE development process as discussed in Section 7.5.

BTP HICB-16, Guidance on the Level of Detail Required for Design Certification Applications Under 10 CFR Part 52:

- Conformance: The level of detail provided for the ARMS conforms to BTP HICB-16.

7.5.4.3.5 Three Mile Island Action Plan Requirements

In accordance with SRP 7.5 and with Table 7.1-1, 10 CFR 50.34(f)(2)(xvii)[II.F.1], 10 CFR 50.34(f)(2)(xix)[II.F.3], and 10 CFR 50.34(f)(2)(xxvii)[III.D.3.3] apply to the ARMS. The ARMS design conforms to these requirements, as indicated above. TMI action plan requirements are addressed generically in Appendix 1A.

7.5.4.4 Testing and Inspection Requirements

ARMS channels are tested and calibrated using the plant operating and maintenance procedures. Each Signal Conditioning Unit (SCU) is equipped with an internal self-diagnostic feature to detect and locate instrument failures. The SCU is also equipped with internal software to facilitate electronic calibration. Each SCU is provided with a means for adjustment of electronic calibration and trip setting. These adjustments do not require equipment removal from its associated panel. The SCU is also provided with a means for generating internal signals that can be used both to check the calibration of the electronic circuits that process the Radiation Detector Assembly's signal and to verify trip setpoints.

The SCU is provided with a means for administrative control of all adjustments and setpoints.

7.5.4.5 Instrumentation and Control Requirements

Every ARM channel consists of a gamma sensitive detector and a digital area radiation processor. All channels are provided with local visual and audible alarms and local readouts. Where appropriate, additional readouts and alarms are provided by local auxiliary units.

7.5.5 Pool Monitoring Instrumentation

General Functional Requirements Conformance

Suppression Pool

The safety-related requirement of the Suppression Pool Temperature Monitoring (SPTM) function is to protect the suppression pool temperature from exceeding established limits. The SPTM, which is a Containment Monitoring (CMS) function, continuously monitors pool temperatures and provides visual indications and alarms to the MCR panels for automatic suppression pool cooling during reactor operation and accident conditions as discussed and evaluated in Subsection 7.2.3.

The CMS provides temperature and level instruments for monitoring suppression pool water temperature and water level, respectively. The CMS instruments provide functions necessary to maintain suppression water temperature and level required for safety-related Emergency Core Cooling System (ECCS) functions described in Subsection 7.3.1.2. For this reason, they are classified as safety-related. The CMS also includes nonsafety-related temperature sensors for the DPS diverse scram function described in Subsection 7.8.1.2.1.

The suppression pool-cooling mode of the Fuel and Auxiliary Pools Cooling System (FAPCS) is automatically initiated by a high pool-temperature signal provided that either FAPCS PIP Train A or Train B is in standby mode. The water level instrument generates a low water level signal when the suppression pool level decreases to a low level setpoint. This signal trips the FAPCS pump when it operates with suction from the suppression pool.

Gravity-Driven Cooling System Pools

The Gravity-Driven Cooling System (GDCS) provides the GDCS pools with safety-related instruments that monitor water level. Each instrument generates high or low water level signals when the water level reading increases above or decreases below its setpoint. Each high and low-level signal initiates an alarm in the MCR. Additionally, a low-level trips the FAPCS system pump operating in the GDCS pool-cooling mode. The high-level setpoint is established to avoid overflow of GDCS pool water. The low water level setpoint is established to prevent inadvertent draining of the pool water below the minimum safe level.

The instruments provide necessary information to the operator for maintaining GDCS water level required for the safety-related ECCS function as discussed and evaluated in Subsection 7.3.1.2. The GDCS also provides nonsafety-related instrumentation for the DPS diverse emergency core cooling function described in Subsection 7.8.1.2.2.

An additional set of GDCS level instrumentation is provided to the ICP for the HP CRD that is discussed in Subsection 7.4.5.

IC/PCCS Expansion Pools

The FAPCS provides the Isolation Condenser / Passive Containment Cooling System (IC/PCCS) expansion pools with safety-related instruments that monitor water level. Each instrument generates high or low water-level signals when the water level reading increases above or

decreases below its setpoint. Each high or low level signal initiates an alarm in the MCR. Additionally, a low level signal trips the IC/PCCS pool cooling and cleanup system. The high water-level setpoint is established to avoid overflow of IC/PCCS expansion pool water. The low water-level setpoint is established to prevent inadvertent draining of the IC/PCCS expansion pool water below the minimum safe level.

The instruments provide necessary information to the operator for refilling the IC/PCCS pools following an accident. Safety-related water level sensors are included to allow ICS to automatically open the pool cross-connect valves between the equipment storage pool and the IC/PCCS expansion pools when a low water level is detected in the IC/PCCS inner expansion pool to which the valves are connected to provide makeup water to support design basis events, as discussed and evaluated in Subsection 7.4.4. The FAPCS also includes nonsafety-related IC/PCCS expansion pool level sensors for use by DPS as described in Subsection 7.8.1.2.5.

Spent Fuel Pool

The FAPCS provides the Spent Fuel pool with safety-related instruments that monitor water level. Each instrument generates a high and low water level signal when the water level reading increases above or decreases below its setpoint. Anti-siphoning holes are provided in all submerged portions of FAPCS discharge lines at the elevation of normal water level to prevent significant draining of the pool in the event of a pipe break. These level instruments are safety-related to ensure proper level is maintained.

The skimmer surge tanks are used for receiving overflow water from the spent fuel pool, and as a pump suction source during the spent fuel pool-cooling mode of operation. These tanks are provided with instruments that monitor their water level. The instruments generate high-high, high, low, or low-low water level signals when the water level reading increases above or decreases below its setpoint. The high and low level signals are used for the opening and closing of the Condensate Storage and Transfer System valve for makeup water to skimmer surge tanks. The high-high and low-low signals initiate high and low water level alarms in the MCR. Additionally, the low level signal is used for tripping the FAPCS pump operating in the spent fuel pool-cooling mode. The high level setpoint is established to avoid overflow of skimmer surge tank water. The low water level setpoint is established to prevent inadvertent draining of the tank water below the minimum safe level.

The level instruments for the spent fuel pool are classified as safety-related components because they provide necessary information to the operator for performing the safety-related function of refilling the spent fuel pool following an accident.

Buffer Pool

The FAPCS provides the buffer pool with safety-related instruments that monitor water level. Each instrument generates low water level signals when the water level reading decreases below its setpoint. Each low-level signal initiates an alarm in the MCR.

The level instruments for the buffer pool are classified as safety-related components because they provide necessary information to the operator for refilling the buffer pool following an accident.

7.5.5.1 System Design Bases

See Subsection 9.1.3.1.

7.5.5.2 System Description

See Subsection 9.1.3.2.

7.5.5.3 Safety Evaluation

This subsection addresses Pool Monitoring Instrumentation conformance to regulatory requirements, guidelines, and industry standards.

7.5.5.3.1 Code of Federal Regulations

10 CFR 50.34(f)(2)(iii)[I.D.1], Human factors engineering principles applied to control room design:

- Conformance: The Pool Monitoring instrumentation design conforms to these requirements.

10 CFR 50.34(f)(2)(xvii)[II.F.1], Accident monitoring instrumentation and control room display requirements:

- Conformance: The Pool Monitoring instrumentation design conforms to these requirements.

10 CFR 50.34(f)(2)(xviii)[II.F.2], Inadequate core cooling instrumentation and control room indication requirements:

- Conformance: The Pool Monitoring instrumentation design conforms to this requirement. The direct water-level instrument system provides for the detection of conditions indicative of inadequate core cooling (Refer to Table 1A-1 of Appendix 1A, Three Mile Island [TMI] Action Plan Items).

10 CFR 50.34(f)(2)(xix)[II.F.3], Post-core damage accident plant condition monitoring requirements:

- Conformance: The Pool Monitoring instrumentation design conforms to this requirement.

10 CFR 50.34(f)(2)(xxiv)[II.K.3.23], Reactor vessel water level measurement requirement under normal post-accident conditions:

- Conformance: The Pool Monitoring instrumentation design conforms to this requirement. (Refer to Table 1A-1 of Appendix 1A TMI Action Plan Items).

10 CFR 50.43(e), Innovative means of accomplishing safety functions:

- Conformance: When innovative means are used in the I&C design it complies with 10 CFR 50.43(e).

10 CFR 50.55a(a)(1), Quality standards for systems important to safety:

- Conformance: The safety-related Pool Monitoring instrumentation design conforms to these standards.

10 CFR 50.55a(h), Protection and safety systems compliance with IEEE Std. 603:

- Conformance: The safety-related Pool Monitoring instrumentation design conforms to IEEE Std. 603. Conformance information is found in Subsections 7.1.6.6.1.1 through 7.1.6.6.1.27. Additional information concerning how the Pool Monitoring conforms to IEEE Std. 603 is discussed below.
    - IEEE Std. 603, Section 4.2 (Safety-related Functions): Safety-related functions of the Pool Monitoring instrumentation are described in Subsection 7.5.5. The design bases for the instrumentation is included with the system that uses the signal from the sensor as shown below.
        - GDCS pools (Subsection 7.3.1.2.1)
        - IC/PCCS Expansion Pools (Subsection 5.4.6.1)
        - Spent Fuel Pool (Subsection 7.5.5.1)
        - Buffer Pool (Subsection 7.5.5.1)
    - IEEE Std. 603, Section 4.3 (Permissive Conditions for Operating Bypasses): Permissive conditions for operating bypasses are not applicable for the Pool Monitoring instrumentation design.
    - IEEE Std. 603, Section 4.6 (Spatially Dependent Variables): Spatial dependency of monitored variables is not applicable to Pool Monitoring instrumentation design.
    - IEEE Std. 603, Section 5.2 (Completion of Protective Actions): The Pool Monitoring instrumentation does not provide any trip or isolation functions.
    - IEEE Std. 603, Section 5.7 (Capability for Test and Calibration): See Subsection 9.1.3.4.
    - IEEE Std. 603, Sections 6.2 and 7.2 (Manual Control): Manual Control is not applicable beyond that discussed in Subsection 7.1.6.6.1.18.
    - IEEE Std. 603, Section 6.4 (Derivation of System Inputs): Derivation of System Inputs for Pool Monitoring instrumentation is not applicable beyond that discussed in Subsection 7.1.6.6.1.20.
    - IEEE Std. 603, Sections 6.5 (Capability of Test and Calibration): See Subsection 9.1.3.4.

- IEEE Std. 603, Sections 6.6 and 7.4 (Operating Bypasses): Operating bypasses for the Pool Monitoring instrumentation design are not applicable beyond that discussed in Subsection 7.1.6.6.1.22.
- IEEE Std. 603, Sections 6.7 and 7.5 (Maintenance Bypasses): Maintenance bypasses for Pool IEEE Std. 603, Monitoring instrumentation design are not applicable beyond that discussed in Subsection 7.1.6.6.1.23.
- IEEE Std. 603, Section 8.2 (Non-Electrical Power Sources): Non-Electrical power sources for Pool Monitoring instrumentation design are not applicable beyond that discussed in Subsection 7.1.6.6.1.26.
- IEEE Std. 603, Section 8.3 (Maintenance Bypasses): Maintenance bypasses for Pool Monitoring instrumentation design are not applicable beyond that discussed in Subsection 7.1.6.6.1.27.

10 CFR 52.47, Contents of applications; technical information, level of design information:

- Conformance: The level of detail provided for the Pool Monitoring instrumentation within the DCD conforms to this requirement.

10 CFR 52.47(a)(21), Resolution of unresolved and generic (medium- and high-priority) safety issues identified in NUREG-0933:

- Conformance: Resolution of unresolved and generic safety issues is discussed in Section 1.11.

10 CFR 52.47(a)(25), Interface requirements for portions of the plant not within scope of certified design application:

- Conformance: There are no interface requirements for this section.

10 CFR 52.47(b)(1), ITAAC in design certification application:

- Conformance: ITAAC are provided for the Instrumentation and Control (I&C) systems and equipment in Tier 1.

10 CFR 52.47(c)(2), Innovative means to accomplish safety function design completeness requirements per 10 CFR 50.43(e):

- Conformance: The I&C design may use innovative means for accomplishing safety functions.

7.5.5.3.2 General Design Criteria

GDC 1, 2, 4, 13, 19, 24, 34, 35, 38, and 63:

- Conformance: The Pool Monitoring instrumentation design conforms to these GDC.

7.5.5.3.3 Regulatory Guides

RG 1.89, Environmental Qualification of Certain Electric Equipment Important to Safety for Nuclear Power Plants:

- Conformance: See Table 3.11-1 (Electrical and Mechanical Equipment for Environmental Qualification).

RG 1.97, Criteria for Accident Monitoring Instrumentation for Nuclear Power Plants:

- Conformance: The Pool Monitoring instrumentation design conforms to RG 1.97, which endorses (with certain exceptions specified in Section C of the RG) IEEE Std. 497 that establishes flexible, performance-based criteria for the selection, performance, design, qualification, display, and quality assurance of accident monitoring variables. IEEE Std. 497 identifies five types of variables for accident monitoring and the criteria for the selection of each type of variable.

RG 1.100, Seismic Qualification of Electric and Mechanical Equipment for Nuclear Power Plants:

- Conformance: The Pool Monitoring instrumentation design conforms to RG 1.100. See Sections 3.9 (Mechanical Systems and Components) and 3.10 (Seismic and Dynamic Qualification of Mechanical and Electrical Equipment).

RG 1.153, Criteria for Safety Systems:

- Conformance: The Pool Monitoring instrumentation is designed to satisfy the requirements of IEEE Std. 603, as endorsed by RG 1.153.

RG 1.180, Guidelines for Evaluating Electromagnetic and Radio-Frequency Interference in Safety-Related Instrumentation and Control Systems:

- Conformance: The Pool Monitoring instrumentation design conforms to RG 1.180. See Table 3.11-1 (Electrical and Mechanical Equipment for Environmental Qualification).

RG 1.209, Guidelines for Environmental Qualification of Safety-Related Computer-Based Instrumentation and Control Systems in Nuclear Power Plants:

- Conformance: See Table 3.11-1 (Electrical and Mechanical Equipment for Environmental Qualification).

7.5.5.3.4 **Branch Technical Positions**

BTP HICB-10, Guidance on Application of Regulatory Guide 1.97:

- Conformance: The Pool Monitoring instrumentation design conforms to RG 1.97 Revision 4, IEEE Standard 497-2002 (with clarifications and exceptions stated in RG 1.97 Revision 4), and RG 1.100.

BTP HICB-16, Guidance on the Level of Detail Required for Design Certification Applications Under 10 CFR Part 52:

- Conformance: The level of detail provided for the Pool Monitoring instrumentation design conforms to BTP HICB-16.

7.5.5.4 Testing and Inspection Requirements

See Subsection 9.1.3.4.

7.5.5.5 Instrumentation and Control Requirements

See Subsection 9.1.3.5.

7.5.6 (Deleted)

7.5.7 COL Information

None.

7.5.8 References

7.5-1 GE Nuclear Energy, "GE Nuclear Energy Quality Assurance Program Description," NEDO 11209-04A, Class I (Non-proprietary), Revision 8, March 1989.

7.5-2 GE Hitachi Nuclear Energy, "GEH ESBWR Setpoint Methodology," NEDE-33304P, Class III (Proprietary), Revision 4, May 2010, and NEDO-33304, Class II (Non-proprietary), Revision 4, May 2010.

Table 7.5-1 (Deleted)

Table 7.5-2 (Deleted)

Table 7.5-3 (Deleted)

Table 7.5-4 CMS Testing and Inspection Requirements

Specified Channel Calibration - Each oxygen and hydrogen gas sampling channel	0% gas concentration and nominal level from 0% to approximately 5%
Sample Gas Leakage Test - Sample lines and associated gas analyzer panel	Design leakage is less than 0.01cc/sec at peak sample pressure

Table 7.5-5 Instrument Ranges for Hydrogen/Oxygen Analyzers

Variable	Range
Drywell/Wetwell Hydrogen Concentration	0 to 30 Vol%
Drywell/Wetwell Oxygen Concentration	0 to 10 Vol%

Figure 7.5-1 Containment Monitoring System Design

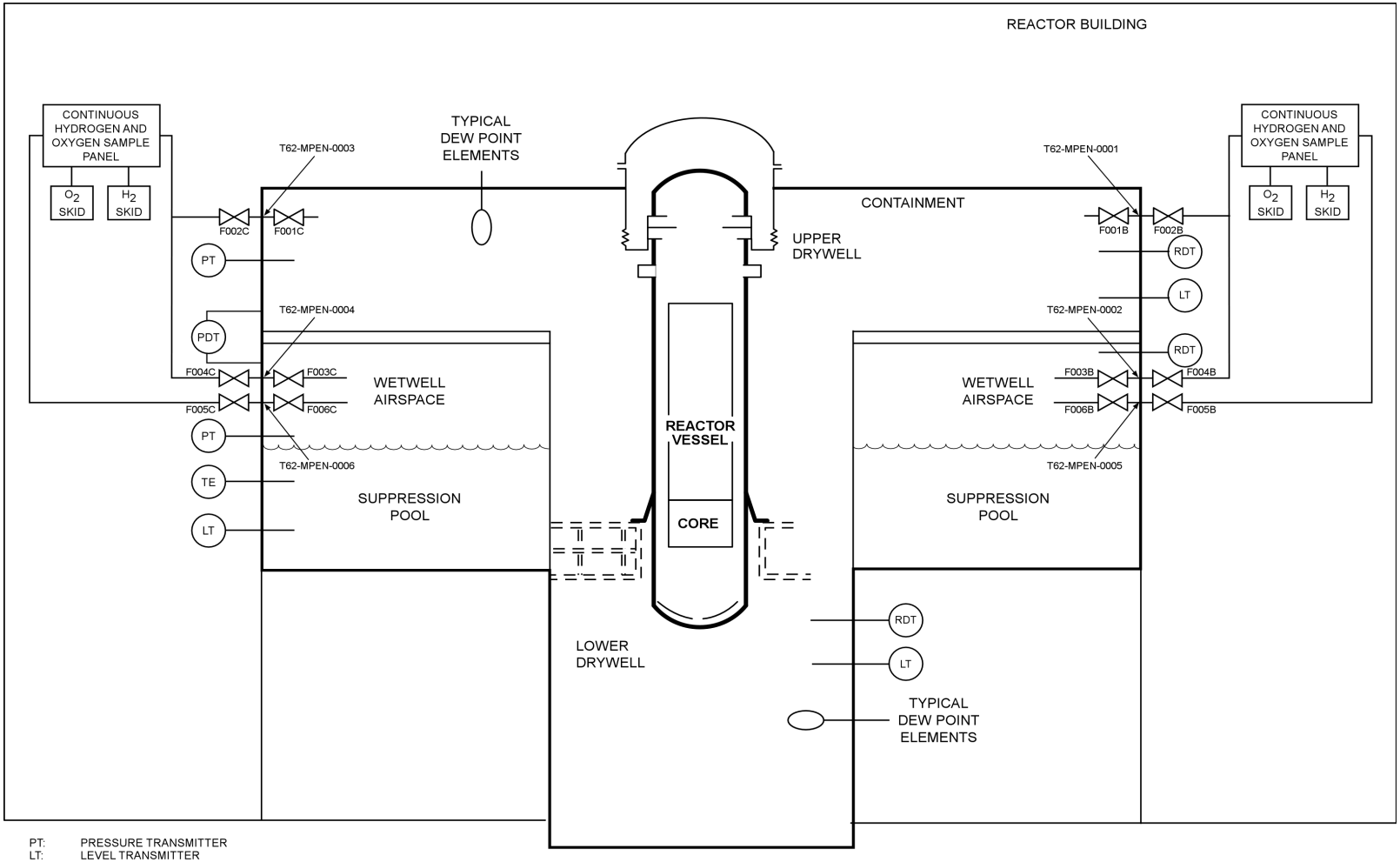

PT: PRESSURE TRANSMITTER
LT: LEVEL TRANSMITTER
PDT: PRESSURE DIFFERENTIAL TRANSMITTER
RDT: RADIATION DETECTION TRANSMITTER
TE: TEMPERATURE ELEMENT

NOTE:
ONLY ONE APPLICABLE SENSOR IS SHOWN
IN THIS SKETCH TO SHOW THEIR TYPICAL LOCATION.

Figure 7.5-2 (Deleted)

Figure 7.5-3 Area Radiation Monitoring System Simplified Functional Block Diagram

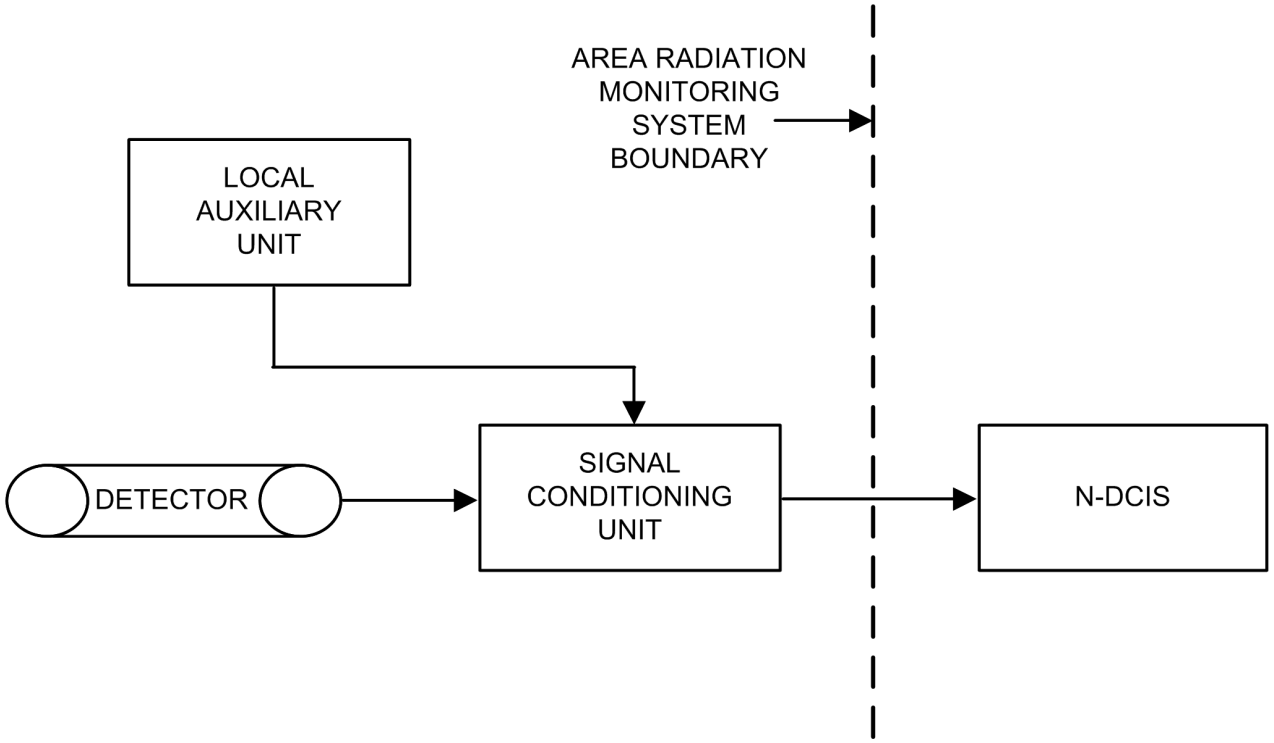

7.6 Interlock Logic

In accordance with the Standard Review Plan (NUREG-0800), the High Pressure/Low Pressure interlock logic addressed in this section are "those interlock logics important to safety which operate to reduce the probability of occurrence of specific events or to maintain safety systems in a state to assure their availability in an accident" and are not addressed in other sections. While there are no ESBWR systems that meet this scope, this section includes discussion of the Low Pressure Coolant Injection (LPCI) High Pressure/Low Pressure (HP/LP) interlock logic that prevents over-pressurization of this low-pressure system which is connected to high pressure systems.

7.6.1 High Pressure/Low Pressure Interlock Logic

7.6.1.1 System Design Bases

The Fuel and Auxiliary Pools Cooling System HP/LP interlock logic prevents the operation of the LPCI mode of the FAPCS whenever there is a high pressure signal from the RPV pressure sensors of the NBS by preventing the isolation valves from opening or closing them if opened. The high pressure signal also prevents testing of the air-operated testable check valves and closes them if they are open for testing. During reactor power operation, the high pressure in the RWCU/SDC system piping exceeds the design pressure of the low pressure FAPCS piping. The following subsections describe the nonsafety-related interlock logic provided to prevent over-pressurization of the FAPCS piping. The FAPCS design is discussed in Subsection 9.1.3. The reactor pressure instruments of the Nuclear Boiler System (NBS) are discussed in Subsection 7.7.1.

The FAPCS is a low pressure piping system. It has the following interfaces with the high pressure Reactor Water Cleanup/Shutdown Cooling (RWCU/SDC) system.

- Its Low Pressure Coolant Injection (LPCI) line is connected to the RWCU/SDC system Loop B discharge line, which is connected to the Reactor Pressure Vessel (RPV) via the Feedwater Loop A discharge line.
- Crosstie connections are provided from the FAPCS suppression pool suction to the RPV RWCU line to the regenerative heat exchanger (RHX) (RWCU suction) and from the RWCU return line (discharge line to RPV) to the FAPCS discharge line to the suppression pool, Gravity-Driven Cooling System (GDCS) pools and containment spray line.

The only other HP/LP interface exists in the GDCS. Because the GDCS piping downstream of squib valves connected to the RPV has a design pressure equivalent to the reactor operating pressure, and the low pressure GDCS piping upstream of squib valves is open to the GDCS pools, there is no need for overpressure protection of the low pressure portion. A high pressure interlock logic is provided to prevent inadvertent manual initiation of the GDCS. The GDCS design basis is discussed in Subsection 7.3.1.2.

7.6.1.2 System Description

7.6.1.2.1 Function Identification

The LPCI line isolation valves consist of parallel pairs of air-operated, testable safety-related check valves and nonsafety-related motor-operated valves to protect the FAPCS low pressure piping from over-pressurization during reactor power operation. These valves are normally closed. Parallel valves are provided for redundancy and fire zone separation. Both sets of parallel valves have identical interlock logic for operation except that the power supplies for operation of these valves are provided from different sources, the Plant Investment Protection (PIP) systems PIP A and PIP B buses, for redundancy and fire zone separation. The logic for operation of the valves is implemented in the PIP A Nonsafety-related Distributed Control and Information System (N-DCIS) and PIP B N-DCIS. The FAPCS modes are described in Subsection 9.1.3.2. A safety relief valve is provided upstream of the LPCI line check valves to protect against over-pressurization of the pipe by leakage through the check valves. The relief valve discharge line is monitored to detect any leakage through the check valves.

The crosstie from the FAPCS to the RWCU/SDC system is used only following a Loss-of-Coolant-Accident (LOCA) with fuel failure. No interlock logic exists between the low pressure FAPCS crosstie and the high pressure RWCU/SDC system. Refer to Subsection 5.4.8 for additional information.

7.6.1.2.2 Power Sources

The power supplies for nonsafety-related pressure instruments, logic, and solenoids (for operation of testable check valves) are provided by the PIP A N-DCIS and PIP B N-DCIS. The power supplies for operation of the LPCI line nonsafety-related motor-operated parallel valves are provided from different sources, the PIP A and PIP B buses, for redundancy and fire zone separation. These nonsafety-related power supplies are backed up by nonsafety-related batteries and diesel generators. Refer to Subsection 8.3.2 for a description of the DC power supplies and Subsection 8.3.1 for a description of the AC power supplies.

7.6.1.2.3 (Deleted)

7.6.1.2.4 Logic Description

The high reactor pressure signals from the NBS processed in the N-DCIS are used to determine whether a high pressure condition exists in the RWCU/SDC discharge line to the RPV feedwater inlet line. If a high pressure condition exists the interlock system logic sends a signal to close the motor-operated valves. This signal also prevents testing of the check valves and prevents the LPCI mode of operation of the FAPCS. The N-DCIS is described in Subsection 7.1.5.

7.6.1.2.5 **(Deleted)**

7.6.1.2.6 **Bypasses and Interlocks**

The HP/LP interlock logic design has no bypass.

7.6.1.2.7 **Redundancy and Diversity**

The LPCI line uses pairs of redundant isolation valves (a parallel pair of motor-operated valves, a parallel pair of testable check valves). Each set of valves is installed in series and provides over-pressure protection. Parallel valves provide redundancy and fire zone separation. Diversity is provided by a testable check valve, equipped with a pneumatic-assist actuator having a fail-closed feature and a motor-operated fail as-is, normally closed block valve.

7.6.1.2.8 **Actuated Devices**

The LPCI line motor-operated, parallel isolation valves and air-operated, parallel, testable check valves are the actuation devices affected by the HP/LP interlock logic. Separate solenoids are used for controlling air to each of the testable check valve actuators. The solenoids for the parallel testable check valves are powered by the PIP A N-DCIS for the solenoid for one valve and the PIP B N-DCIS for the solenoid for the other parallel valve. The PIP A bus powers one of the parallel motor-operated valves and the PIP B bus powers the other motor-operated valve. The motor-operated valves are fail as-is.

7.6.1.2.9 **Separation**

Electrical separation is provided by different power sources (PIP A and PIP B buses) with the logic separation provided by having implementation of valve operation in the PIP A N-DCIS and PIP B N-DCIS.

7.6.1.2.10 **Testability**

Testing of the reactor pressure instruments is discussed in Subsection 7.7.1.4.

Due to the high pressure interlock, the LPCI line isolation valves and check valves are stroke-tested only during low reactor pressure conditions. These valves are not subjected to the 10 CFR 50 Appendix J leak rate test, because they are neither containment isolation valves nor part of the Reactor Coolant Pressure Boundary (RCPB). However, they are leak rate tested per American Society of Mechanical Engineers (ASME) B&PV Code Section XI.

7.6.1.2.11 **Environmental Considerations**

The instrumentation and controls (I&C) for the HP/LP interlock logic are classified as nonsafety-related equipment and qualified to the environmental conditions existing at the locations of the devices.

7.6.1.2.12 **Operational Consideration**

The HP/LP interlock logic prevents manual initiation of the LPCI mode of FAPCS until the RPV has been depressurized below the reactor pressure instrument setpoint for the HP/LP interlock logic.

7.6.1.2.13 **Reactor Operator Information**

The status of each valve providing the HP/LP boundary is indicated on the video display units (VDUs) in the Main Control Room (MCR) and on the Remote Shutdown System (RSS) panels. The status of the pressure instruments also is indicated in the VDUs in the MCR and the RSS panels.

7.6.1.2.14 **Setpoints**

The HP/LP interlock logic setpoint is based on the design pressure of the low pressure FAPCS piping.

7.6.1.3 **Safety Evaluation**

There is no HP/LP interface involving safety-related systems. There is a nonsafety-related HP/LP interface involving the low pressure FAPCS LPCI line, which interfaces with a high pressure condition in the RWCU/SDC system piping. The RWCU/SDC system piping interfaces with the feedwater line, which maintains the RCPB.

The parallel testable safety-related check valves provide protection to the low pressure FAPCS from the high pressure RWCU system. The motor-operated, normally closed, fail-as-is gate valves provide defense-in-depth protection against any leakage passing through the check valves. A safety relief valve is provided upstream of the testable check valves to protect against over-pressurization of the pipe by leakage through the check valves. The relief valve discharge line is monitored to detect any leakage through the check valves.

The interlock logic prohibits the LPCI line isolation valves from being opened whenever the reactor pressure is greater than the reactor pressure permissive setpoint for the interlock logic, thereby precluding over-pressurization of the low pressure FAPCS piping during reactor power operation. The interlock logic permits LPCI mode initiation when the reactor pressure is below its reactor pressure permissive setpoint allowing the operator to manually open either isolation valve. The interlock logic operates automatically, and its status is provided to the reactor operator on the VDUs in the MCR and the RSS panels.

This subsection addresses conformance of the nonsafety-related HP/LP interlock logic to regulatory requirements, guidelines, and industry standards.

7.6.1.3.1 **Code of Federal Regulations**

10 CFR 50.34(f)(2)(v)[I.D.3], Bypass and operable automatic status indication of safety systems:

- Conformance: The HP/LP interlock logic does not have a bypass feature.

10 CFR 50.43(e), Innovative means of accomplishing safety functions:

- Conformance: When innovative means are used in the I&C design it complies with 10 CFR 50.43(e).

10 CFR 50.55a(a)(1), Quality standards for systems important to safety:

- Conformance: The HP/LP interlock logic is nonsafety-related.

10 CFR 50.55a(h), Protection and safety systems compliance with IEEE Std. 603

- Conformance: The HP/LP interlock logic is nonsafety-related. 10 CFR 50.55a(h) and IEEE Std. 603 are not applicable.

10 CFR 52.47, Contents of applications; technical information, level of design information:

- Conformance: The level of detail provided for the interlock logic within the DCD conforms to this requirement.

10 CFR 52.47(a)(21), Resolution of unresolved and generic (medium- and high-priority) safety issues identified in NUREG-0933:

- Conformance: Resolution of unresolved and generic safety issues is discussed in Section 1.11.

10 CFR 52.47(a)(25), Interface requirements for portions of the plant not within scope of certified design application:

- Conformance: There are no interface requirements for this section.

10 CFR 52.47(b)(1), ITAAC in design certification application:

- Conformance: ITAAC are provided for the I&C systems and equipment in Tier 1.

10 CFR 52.47(c)(2), Innovative means to accomplish safety function design completeness requirements per 10 CFR 50.43(e):

- Conformance: The I&C design may use innovative means for accomplishing safety functions.

7.6.1.3.2 General Design Criteria

GDC 1, 2, 4, 13, 19, 24 and 25:

- Conformance: Because the HP/LP interlock logic does not involve reactivity control, GDC 25 is not applicable. The interlock logic design complies with the remaining GDC listed above.

7.6.1.3.3 Regulatory Guides

RG 1.47, Bypassed and Inoperable Status Indication for Nuclear Power Plant Safety Systems:

- Conformance: The HP/LP interlock logic does not have a bypass feature.

RG 1.53, Application of the Single-Failure Criterion to Safety Systems:

- Conformance: The HP/LP interlock logic is nonsafety-related. RG 1.53 is not applicable.

RG 1.75, Criteria for Independence of Electrical Safety Systems:

- Conformance: The HP/LP interlock logic is nonsafety-related. The physical and electrical separations maintained between safety-related and nonsafety-related systems conform to RG 1.75 as described in Subsections 8.3.1.3 and 8.3.1.4.

RG 1.105, Setpoints for Safety-Related Instrumentation:

- Conformance: The HP/LP interlock logic is nonsafety-related. RG 1.105 does not apply to the HP/LP interlock logic.

RG 1.118, Periodic Testing of Electric Power and Protection Systems:

- Conformance: The parallel safety-related testable check valves and parallel nonsafety-related motor-operated gate valves are stroke-tested only during low reactor pressure conditions due to the interlock logic.

RG 1.151, Instrument Sensing Lines:

- Conformance: The HP/LP interlock logic is nonsafety-related. RG 1.151 is not applicable.

RG 1.152, Criteria for Use of Computers in Safety Systems of Nuclear Power Plants:

- Conformance: The HP/LP interlock logic is nonsafety-related. RG 1.152 is not applicable.

RG 1.153, Criteria for Safety Systems:

- Conformance: The HP/LP interlock logic is nonsafety-related. RG 1.153 is not applicable.

RG 1.168, Verification, Validation, Reviews, and Audits for Digital Computer Software Used in Safety Systems of Nuclear Power Plants:

- Conformance: The HP/LP interlock logic is nonsafety-related. RG 1.168 is not applicable.

RG 1.169, Configuration Management Plans for Digital Computer Software Used in Safety Systems of Nuclear Power Plants:

- Conformance: The HP/LP interlock logic is nonsafety-related. RG 1.169 is not applicable.

RG 1.170, Software Test Documentation for Digital Computer Software Used in Safety Systems of Nuclear Power Plants:

- Conformance: The HP/LP interlock logic is nonsafety-related. RG 1.170 is not applicable.

RG 1.171, Software Test Documentation for Digital Computer Software Used in Safety Systems of Nuclear Power Plants:

- Conformance: The HP/LP interlock logic is nonsafety-related. RG 1.171 is not applicable.

RG 1.172, Software Requirements Specifications for Digital Computer Software Used in Safety Systems of Nuclear Power Plants:

- Conformance: The HP/LP interlock logic is nonsafety-related. RG 1.172 is not applicable.

RG 1.173, Developing Software Life Cycle Processes for Digital Computer Software Used in Safety Systems of Nuclear Power Plants:

- Conformance: The HP/LP interlock logic is nonsafety-related. RG 1.173 is not applicable.

RG 1.180, Guidelines for Evaluating Electromagnetic and Radio-Frequency Interference in Safety-Related Instrumentation and Control Systems:

- Conformance: The HP/LP interlock logic is nonsafety-related. RG 1.180 is not applicable.

RG 1.204, Guidelines for Lightning Protection of Nuclear Power Plants:

- Conformance: The HP/LP interlock logic is not a separate system RG 1.204 is not applicable.

7.6.1.3.4 **Branch Technical Positions**

BTP HICB-1, Guidance on Isolation of Low-Pressure Systems from the High-Pressure Reactor Coolant System:

- Conformance: Because the motor-operated valves are normally closed and are interlocked as described above, and the check valves are tested only when the reactor pressure is below the permissive setpoint for the interlock, the nonsafety-related HP/LP interlock logic design conforms to BTP HICB-1.

BTP HICB-11, Guidance on Application and Qualification of Isolation Devices:

- Conformance: The HP/LP interlock logic is not an isolation device. BTP HICB-11 is not applicable.

BTP HICB-12, Guidance on Establishing and Maintaining Instrument Setpoints:

- Conformance: The HP/LP interlock logic is nonsafety-related. BTP HICB-12 does not apply to the HP/LP interlock logic.

BTP HICB-14, Guidance on Software Reviews for Digital Computer-Based Instrumentation and Control Systems:

- Conformance: The HP/LP interlock logic is nonsafety-related so BTP HICB-14 does not apply.

BTP HICB-16, Guidance on the Level of Detail Required for Design Certification Applications Under 10 CFR Part 52:

- Conformance: The level of detail provided for the HP/LP interlock logic conforms to BTP HICB-16.

BTP HICB-17, Guidance on Self-Test and Surveillance Test Provisions:

- Conformance: The HP/LP interlock logic is nonsafety-related. The motor-operated valves and testable check valves are stroke-tested only during low reactor pressure because of the interlock. No surveillance tests are conducted.

BTP HICB-18, Guidance on the Use of Programmable Logic Controllers in Digital Computer-Based Instrumentation and Control Systems.

- Conformance: The HP/LP interlock logic is nonsafety-related. BTP HICB-18 is not applicable.

BTP HICB-21, Guidance on Digital Computer Real-Time Performance:

- Conformance: The HP/LP interlock logic is nonsafety-related. BTP HICB-21 does not apply to the HP/LP interlock logic.

7.6.1.3.5 Three Mile Island Action Plan Requirements

In accordance with NUREG-0800 Section 7.6 and Table 7.1-1, 10 CFR 50.34(f)(2)(v)[I.D.3] applies to the HP/LP interlock system and is addressed above. Three Mile Island (TMI) action plan requirements are generically addressed in Appendix 1A.

7.6.1.4 Testing and Inspection Requirements

HP/LP interlock logic functions are calibrated and tested during the preoperational testing program to confirm that the HP/LP interlock logic functions as designed.

Testing and inspection of the NBS system pressure instruments are described in Subsection 7.7.1.4.

The parallel safety-related testable check valves and parallel nonsafety-related motor-operated gate valves are stroke-tested only during low reactor pressure conditions due to the interlock logic.

7.6.1.5 Instrumentation and Control Requirements

The following information is available to the reactor operator for the instrumentation and interlock logic described in this subsection.

- The reactor pressure is indicated in the MCR and at four local racks in the Reactor Building outside the containment.
- HP/LP interlock logic status is indicated in the MCR and indicates when any LPCI valve is open and the interlock logic is active.
- The open and closed positions of the isolation valves and check valves are indicated in the MCR.

7.6.2 (Deleted)

7.6.2.1 (Deleted)

7.6.3 COL Information

None.

7.6.4 References

None.

7.7 Control Systems

This section describes the Instrumentation and Control (I&C) systems for normal plant operation that do not perform safety-related functions. However, these systems do control processes that have a significant effect on plant safety. These systems can affect the performance of safety-related functions either through normal operation or through inadvertent operation. The systems described in this section include:

- The Nuclear Boiler System (NBS) - nonsafety-related subsystems
- Rod Control and Information System (RC&IS)
- Feedwater Control System (FWCS)
- Plant Automation System (PAS)
- Steam Bypass and Pressure Control (SB&PC) System
- Neutron Monitoring System (NMS) - nonsafety-related subsystems
- Containment Inerting System (CIS)

The nonsafety-related monitoring and control for the RC&IS, FWCS, PAS, SB&PC System, NMS and NBS are part of a group of systems that is collectively referred to as the Nonsafety-Related Distributed Control and Information System (N-DCIS). A simplified network functional diagram of the DCIS is included as Figure 7.1-1. This diagram indicates the relationships of RC&IS, FWCS, PAS, SB&PC System, NMS and NBS with their nonsafety-related peers and with safety-related plant data systems that are collectively referred to as the Q-DCIS. Section 7.1 contains a description of these relationships.

7.7.1 Nuclear Boiler System

The NBS instrumentation provides monitoring and control input for operational variables during normal plant operating modes and during the plant response to accidents. The NBS sensors used for safety-related system actuation and control functions are addressed in other subsections within this chapter. This subsection describes only those NBS instruments used for actuation and control of nonsafety-related systems.

7.7.1.1 System Design Bases

7.7.1.1.1 Safety Design Bases

Section 7.7 addresses only the nonsafety-related portion of the NBS instruments.

7.7.1.1.2 Power Generation (Non-safety) Design Bases

The nonsafety-related portions of the NBS instrumentation meet power generation requirements by providing indication of parameters in support of normal plant operations. These parameters are:

- Reactor coolant and RPV temperatures
- RPV water level:
  - Shutdown range
  - Narrow range
  - Wide range
  - Fuel zone range
- RPV pressure
- Safety relief valve discharge line temperature
- Main steam flow rate

The NBS design provides for periodic calibration and testing of its instrumentation during plant operation.

7.7.1.2 System Description

7.7.1.2.1 Summary Description

The NBS instruments are used to provide the operator with information during normal, transient, accident, and post-accident conditions. The NBS instruments measure the reactor coolant temperature, RPV temperature, RPV water level, RPV pressure, main steam flow rate, and detect SRV leakage.

Nonsafety-related instruments are powered from the nonsafety-related instrument power supply buses.

For instruments that are located below the process tap, including the RPV water level measurements, the sensing line slopes downward from the process tap to the instrument to preclude air traps. Where it is impractical to locate the instruments below the process connection, the sensing lines descend below the process connection before sloping upward to a high point vent located at an accessible location with a fill connection. This permits filling and venting of noncondensible gases from the sensing line during calibration procedures.

Level and pressure sensing lines, up to the outboard excess flow check valve, are connected to the Reactor Coolant Pressure Boundary (RCPB) and are classified as Quality Group A, ASME B&PV Code Section III, safety-related, and Seismic Category 1. The typical arrangement for these sensing lines is a restricting orifice located inside the containment and a manual isolation valve located outside the containment, which is followed by an excess flow check valve.

7.7.1.2.2 Detailed System Description

Reactor Coolant and Reactor Pressure Vessel Temperature Monitoring System

The reactor coolant temperature is measured at the mid-vessel inlet to the Reactor Water Cleanup and Shutdown Cooling (RWCU/SDC) system and at the bottom head drain. Coolant temperature can also be determined in the steam-filled parts of the RPV and steam-water mixture by measuring the reactor pressure. In the saturated system, reactor pressure connotes saturation temperature. Coolant temperatures (core inlet temperature) can normally be measured by the redundant core inlet temperature sensors located in each Local Power Range Monitor (LPRM) assembly below the core plate elevation.

The RPV outside surface temperature is measured at the head flange and at the bottom head locations. Temperatures needed for operation and for compliance with the Technical Specification operating limits are obtained from these measurements.

Reactor Pressure Vessel Water Level

Figure 7.7-1 shows the water level range and the vessel penetrations for each water level range. The instruments are differential pressure devices calibrated for the specific vessel pressure and liquid temperature conditions. The reactor water level measurement is temperature compensated through the thermocouples installed on the sensing line. As described in Subsection 4.6.1.2.4, the Control Rod Drive Hydraulic Subsystem provides a purge flow that keeps the RPV water level reference leg instrument lines full. These lines are filled to address the effects of noncondensible gases in the instrument lines and to prevent erroneous reference information after a rapid RPV depressurization event. The reactor water level instrumentation is referenced to level zero, which is at the Top of Active Fuel (TAF).

Reactor water level instrumentation that initiates safety-related system functions and engineered safety features (ESF) system functions is discussed in Subsections 7.2.1 and 7.3.1. Reactor water level instrumentation that is used as part of the FWCS is discussed in Subsection 7.7.3. Reactor water level instrumentation used for Diverse Protection System (DPS) functions is discussed in Subsection 7.8.1.

The Shutdown Range Water Level is used to monitor the RPV water level during shutdown conditions when the RPV head is removed, including when the reactor system is flooded for refueling or maintenance. The water level measurement design method is the condensing chamber reference leg type and uses differential pressure devices as its primary elements. The vessel temperature and pressure conditions that are used for the calibration are given in Section 5.1. The two vessel instrument nozzles used for this water level measurement are located at the top of the RPV head and just below the bottom of the dryer skirt.

The Narrow Range Water Level uses the RPV taps near the top of the steam outlet nozzle and the taps near the bottom of the dryer skirt. The instruments are calibrated to be accurate during normal

reactor operating conditions. The method of water level measurement is the condensing chamber reference leg type and uses differential pressure devices as its primary elements. The FWCS uses this range for its water level control and indication inputs. Refer to Subsection 7.7.3 for more information on the FWCS.

The Wide Range Water Level uses the RPV taps below the bottom of the active fuel. The upper taps are also used for the Narrow Range Water Level. The instruments are calibrated to be accurate at normal power operating conditions. The water level measurement method is the condensing chamber reference leg type and uses differential pressure devices as its primary elements. Information from the RPV Wide Range Water Level instrumentation used for safety-related and nonsafety-related applications is provided for the range of normal, transient, and accident conditions. Separate sensors and indicators are provided for Wide Range Water Level indication.

The Fuel Zone Range Water Level uses the RPV taps near the top of the steam outlet nozzle and the taps below the bottom of the active fuel. The instruments are calibrated to be accurate at zero Pa gauge (0 psig) and saturated conditions. The water level measurement method is the condensing chamber reference type and uses differential pressure devices as its primary elements. The RPV Fuel Zone Water Level instrumentation is provided for post-accident monitoring situations in which the water level is substantially below the normal range. Separate sensors and indicators are provided for Fuel Zone Range Water Level indication.

Reactor Pressure Vessel Pressure

Pressure sensors detect RPV pressure from the instrument lines used for measuring RPV water level and provide indications in the Main Control Room (MCR).

Safety Relief Valve Leak Detection

Thermocouples are located in the discharge pipes of ten Safety Relief Valves (SRVs) (Reference Subsection 5.2.5). The temperature signals are recorded, and temperatures indicative of a leaking SRV are indicated in the MCR.

Main Steam Flow Rate

Differential pressure sensors are used to infer main steam flow rate. Pressure taps from the throat of the RPV steam outlet nozzles, in conjunction with the RPV dome pressure taps, measure differential pressure. The square root of differential pressure is proportional to the main steam flow rate. Outputs from nonsafety-related pressure sensors are used for feedwater (FW) control.

7.7.1.3 Safety Evaluation

Section 7.7 addresses only the nonsafety-related portion of the NBS instruments.

The nonsafety-related instruments discussed in this subsection are designed to operate under normal and peak operating conditions of system pressure and at ambient pressures and temperatures. Any mechanical interface between nonsafety-related instruments and safety-related instrument piping or the RCPB is classified as safety-related to avoid compromise of the safety-related sensing capability or the RCPB. If a line break occurs in a nonsafety-related portion of a sensing line, the excess flow check valve closes to stop the flow of reactor coolant. If there is a single failure of the excess flow check valve, a restriction orifice limits the flow of coolant to within acceptable bounds.

7.7.1.3.1 Code of Federal Regulations

10 CFR 50.34(f)(2)(iii)[I.D.1], Human factors engineering principles applied to control room design:

- Conformance: The NBS design conforms to these requirements.

10 CFR 50.34(f)(2)(xviii)[II.F.2], Inadequate core cooling instrumentation and control room indication requirements:

- Conformance: The NBS design conforms to these requirements. Reactor water level instrumentation errors due to non-condensible gases in instrument reference legs are addressed in Subsection 7.7.1.2.2.

10 CFR 50.43(e), Innovative means of accomplishing safety functions:

- Conformance: When innovative means are used in the I&C design it complies with 10 CFR 50.43(e).

10 CFR 50.49, Environmental qualification of electric equipment important to safety for nuclear power plants:

- Conformance: See Table 3.11-1 (Electrical and Mechanical Equipment for Environmental Qualification).

10 CFR 50.55a(a)(1), Quality standards for systems important to safety:

- Conformance: The NBS conforms to this requirement for the use of the applicable standards.

10 CFR 52.47, Contents of applications; technical information, level of design information:

- Conformance: The level of detail provided for the NBS within the DCD conforms to this requirement.

10 CFR 52.47(a)(21), Resolution of unresolved and generic (medium- and high-priority) safety issues identified in NUREG-0933:

- Conformance: Resolution of unresolved and generic safety issues is discussed in Section 1.11.

10 CFR 52.47(a)(25), Interface requirements for portions of the plant not within scope of certified design application:

- Conformance: There are no interface requirements for this section.

10 CFR 52.47(b)(1), ITAAC in design certification application:

- Conformance: ITAAC are provided for the I&C systems and equipment in Tier 1.

10 CFR 52.47(c)(2), Innovative means to accomplish safety function design completeness requirements per 10 CFR 50.43(e):

- Conformance: The I&C design may use innovative means for accomplishing safety functions.

7.7.1.3.2 General Design Criteria

GDC 1, 2, 4, 13, 19, 20, 21, 22, 23, and 24:

- Conformance: The NBS design complies with these GDC.

7.7.1.3.3 Regulatory Guides

RG 1.89, Environmental Qualification of Certain Electric Equipment Important to Safety for Nuclear Power Plants:

- Conformance: See Table 3.11-1 (Electrical and Mechanical Equipment for Environmental Qualification).

RG 1.97, Criteria for Accident Monitoring Instrumentation for Nuclear Power Plants:

- Conformance: The ESBWR I&C conforms to RG 1.97. Specific instruments credited for RG 1.97 compliance are determined as part of the HFE development process as discussed in Section 7.5.

RG 1.100, Seismic Qualification of Electric and Mechanical Equipment for Nuclear Power Plants:

- Conformance: See Sections 3.9 (Mechanical Systems and Components) and 3.10 (Seismic and Dynamic Qualification of Mechanical and Electrical Equipment).

RGs 1.151, Instrument Sensing Lines:

- Conformance: The instrument sensing lines for the NBS instrumentation conform to the guidelines of RG 1.151 and ISA-67.02.01. Flow restrictors are provided inside containment on instrument lines connected to the RCPB. Manual isolation valves and self-actuating excess flow check valves are provided outside the drywell. The mechanical design guidelines as defined by ISA-67.02.01 and RG 1.151 are met as applicable for each installation.

RG 1.180, Guidelines for Evaluating Electromagnetic and Radio-Frequency Interference in Safety-Related Instrumentation and Control Systems.

- Conformance: The NBS design conforms to RG 1.180. See Table 3.11-1 (Electrical and Mechanical Equipment for Environmental Qualification).

RG 1.204, Guidelines for Lightning Protection of Nuclear Power Plants:

- Conformance: The NBS design conforms to RG 1.204.

RG 1.209, Guidelines for Environmental Qualification of Safety-Related Computer-Based Instrumentation and Control Systems in Nuclear Power Plants:

- Conformance: See Table 3.11-1 (Electrical and Mechanical Equipment for Environmental Qualification).

7.7.1.3.4 Branch Technical Positions

BTP HICB-16, Guidance on the Level of Detail Required for Design Certification Applications Under 10 CFR Part 52:

- Conformance: The level of detail provided for this system complies with BTP HICB-16.

BTP HICB-14, 17, 18, 19, and 21 are discussed in association with the Safety System Logic and Control/Engineered Safety Features (SSLC/ESF) in Subsection 7.3.5.3.

7.7.1.4 Testing and Inspection Requirements

Calibration and testing of the various instruments are performed during preoperational testing to confirm that the instrumentation is installed correctly and performs as intended.

Pressure, differential pressure, water level, and flow instruments are located outside the drywell so that calibration and test signals can be applied during reactor operation. Temperature elements located inside the drywell can be tested and calibrated from junction boxes located outside the drywell.

7.7.1.5 Instrumentation and Control Requirements

The information available to the reactor operator from the NBS instrumentation is discussed in Section 7.1.

7.7.2 Rod Control and Information System

The main objective of the RC&IS is to control the Fine Motion Control Rod Drive (FMCRD) motors of the Control Rod Drive (CRD) (explained in Subsections 4.6.1 and 4.6.2) to permit changes in core reactivity so that reactor power level and power distribution can be controlled. The RC&IS acquires status and control rod position information from the CRD FMCRD instrumentation. The RC&IS sends purge water valve control signals to and acquires status signals from the Hydraulic Control Units (HCUs) of the CRD. The RC&IS also sends and receives status and control signals to and from other plant systems and RC&IS modules.

7.7.2.1 System Design Bases

7.7.2.1.1 Safety Design Bases

The RC&IS has no functional safety-related design basis and is designed so that it does not adversely affect functional capabilities of safety-related systems.

7.7.2.1.2 Power Generation (Non-safety) Design Bases

The RC&IS performs the following functions.

- Controls changes to core reactivity, and thereby reactor power, by moving neutron absorbing control rods within the reactor core as initiated by the following:
  - The plant operator, when the RC&IS is in a manual or semiautomatic mode of operation.
  - The automatic rod movement mode of the PAS, when the RC&IS is in an automatic mode of operation.
- Displays summary information to the plant operator about positions of the control rods in the core and the status of the FMCRDs and RC&IS. This summary information is provided by a RC&IS dedicated operator interface in the MCR. There are dual redundant measurements of the absolute rod position during normal FMCRD conditions. If one position detector fails for an individual FMCRD, the failed position detector can be bypassed, and the reactor can continue to operate without power restrictions.
- Provides RC&IS and FMCRD status data and control rod position data to other plant systems that require this data, such as the N-DCIS.
- Provides automatic, electric motor Run-in of all operable control rods, following detection of activation of the hydraulic insertion of the control rods, by a reactor scram. This is called the scram-follow function.
- Automatically enforces rod movement blocks to prevent potentially undesirable rod movements. These blocks do not affect a hydraulic scram insertion function, the scram-follow function, the ARI function, or the Selected Control Rod Run-in (SCRRI) function.
- Manually and automatically inserts all control rods by an alternate and diverse method called the FMCRD motor Run-in function. The associated ARI activation signals, which are activated if the automatic or manual ARI function is activated by the N-DCIS logic, are provided to the RC&IS from the N-DCIS. The RC&IS logic is designed so that a single failure in the single-channel FMCRD control logic and equipment associated with one FMCRD, cannot result in insertion failure of that rod when the ARI function is activated.
- Inserts selected control rods upon Select Control Rod Run-in (SCRRI) / Select Rod Insert (SRI) command signals from the DPS. Manual initiation capability is also provided in the MCR. The RC&IS also sends a confirmatory SCRRI signal to the DPS to initiate an SRI.
- Ensures that the pattern of control rods in the reactor is consistent with specific control rod pattern restrictions. This function is performed by the Rod Worth Minimizer (RWM) subsystem of the RC&IS and is only effective when reactor power is below the Low Power Setpoint (LPSP).
- Enforces fuel operating thermal limits Minimum Critical Power Ratio (MCPR) and Maximum Linear Heat Generation Rate (MLHGR) when reactor power is above the ATLM enable setpoint.

This function is performed by the Automated Thermal Limit Monitor (ATLM) subsystem of the RC&IS.

- Provides for FMCRD-related surveillance tests, including periodic individual HCU scram performance testing.
- Enforces adherence to a predetermined rod pull/insert sequence, the Reference Rod Pull Sequence (RRPS), during automatic and semi-automatic rod movements, through the capabilities of the gang rod selection and verification logic of the Rod Action and Position Information (RAPI) subsystem.

7.7.2.2 System Description

A simplified, typical RC&IS block diagram is shown in Figure 7.7-2 that depicts the major components of the RC&IS and their interconnections and interfaces with other plant systems.

7.7.2.2.1 System Configuration

The RC&IS uses a dual redundant architecture of two independent channels for normal monitoring of control rod positions and executing normal control rod movement commands. Under normal conditions, each channel receives separate input signals, and both channels perform the same functions. The outputs of the two channels are continuously compared. For normal functions of enforcing and monitoring control rod positions and emergency rod insertion, the outputs of the two channels must agree. Any sustained disagreement between the two channels results in a rod block. However, when the conditions for generating a rod block signal in a single channel are satisfied, that channel alone (independent of the other channel) issues a rod block signal.

For the FMCRD emergency insertion functions, three-out-of-three logic is used in the induction motor controller logic. To assure high reliability for the emergency insertion function, a single RC&IS bypass is automatically enabled with the ARI signal.

Failure or malfunction of the RC&IS has no effect on the hydraulic scram function of the CRD. The circuitry for normal insertion and withdrawal of control rods in the RC&IS is completely independent of the Reactor Protection System (RPS) circuitry controlling the scram valves. This separation of the RPS scram and the RC&IS normal rod control functions prevents any failure in the RC&IS circuitry from affecting the scram circuitry.

The RC&IS consists of multiple types of cabinets, or panels, that contain special electronic/electrical equipment modules for performing the RC&IS logic in the RB and Control Building (CB). It also includes a dedicated operator interface on the main control panel in the MCR. The RC&IS dedicated operator interface provides summary information to the plant operator with respect to control rod positions, FMCRD, RC&IS status, and HCU status. The RC&IS also provides controls for performing normal rod movement functions, bypassing major RC&IS subsystems, performing CRD surveillance tests (except the FMCRD holding brake testing performed during a refueling outage), and resetting RC&IS trips. RCIS provides most abnormal status conditions, but a

few abnormal status conditions require reset actions at local control panel equipment. There are nine types of electronic/electrical cabinets/panels that perform the logic functions of the RC&IS:

Rod Action Control Subsystem Cabinets

There are two types of cabinets in the back-panel area referred to as the Rod Action Control Subsystem (RACS). The RACS consists of RAPI panels and an ATLM/RWM panel, which provides for a dual redundant architecture. The RAPI panels are RAPI-A and -B. The channel A logic is in the RAPI-A panel, and the channel B logic is in the RAPI-B panel. In addition, the RAPI-A panel includes the RAPI dedicated operator interface that displays the same information that is available on the RC&IS dedicated operator interface in the MCR. The RAPI dedicated operator interface also serves as a backup for the RC&IS dedicated operator interface control capabilities, should the RC&IS dedicated operator interface become unavailable. A hardwired switch located in the RAPI-A panel changes the selection of dedicated operator interface control operation capability between the RC&IS dedicated operator interface and the RAPI dedicated operator interface. In other words, only one of these dedicated operator interfaces can be selected for control capability at any given time. Normally, the RC&IS dedicated operator interface rather than the RAPI dedicated operator interface is selected for control functions.

The two ATLM/RWM panels each contain channel logic for the ATLM, the RWM and the RAPI Signal Interface Unit (SIU).

Remote Communication Cabinets

The remote communication cabinets are located in sets with each set containing a dual channel File Control Module (FCM). The FCMs interface with the Rod Server Modules (RSMs) that are contained in the same set of cabinets, and interface with the RAPI subsystems in the MCR, through the RC&IS multiplexing network. Each RSM comprises logic for two Rod Server Processing Channels (RSPCs A and B) so that there is a dual redundant logic design for each RSM. There are also associated Resolver-to-Digital Converters (RDCs) A and B that convert the Resolver A and Resolver B analog signals of the CRD system into two independent digital representations of the absolute position of the corresponding FMCRD.

Both RSPCs receive the digital representations from both RDCs for use in the RSPC control and monitoring logic. The logic for each channel of the RSPC can either be located in the associated FCM channel equipment or located in a separate, replaceable RSPC module located in the remote communication cabinet. Figure 7.7-2 shows a typical representation with the logic of each RSPC channel implemented in a separate RSPC module. However, regardless of the final detailed remote communication cabinet hardware configuration for RSPC logic implementation, channel A RSPC logic is implemented in equipment separate from the equipment in which the channel B RSPC logic is implemented, to maintain tolerance for single channel failures.

Induction Motor Controller Cabinets

The Induction Motor Controller Cabinets (IMCCs) consist of motor control equipment required for turning on and off the Alternating Current (AC) power required to energize the FMCRD 3-Phase motor and its directly associated Motor Built-in Brake (MBB) to perform FMCRD movements. The control capability includes AC phase swapping, of the 3-phase AC power supplied to each motor, so that both insertion and withdrawal movements of each FMCRD can be accomplished. The MBB accurately positions each FMCRD. The de-energization of this brake, promptly after AC power is turned off by the motor control, prevents excessive movement after the desired stopping position has been reached. Each motor controller includes logic to process rod movement commands received from the logic of the associated RSPCs in a remote communication cabinet. Each motor control also provides status signals to the associated RSPCs. All motor controls also receive a separate discrete input signal from an Emergency Rod Insertion Control Panel (ERICP) used in the logic for providing the emergency rod insertion movement functions (that is scram-follow, ARI, or SCRRI).

Rod Brake Controller Cabinets

The Rod Brake Controller Cabinets (RBCCs) contain electrical or electronic logic and other associated electrical equipment for the proper operation of the FMCRD holding brakes. The Rod Brake Controllers (RBCs) receive signals for brake disengagement or engagement from the logic of the associated RSPCs. RBC logic provides two separate brake status signals (channel A and channel B) to the logic of the associated RSPCs.

Emergency Rod Insertion Control Panel

The ERICP is located in the back-panel area of the MCR. It serves as an additional logic panel that contains relay (or solid-state equivalent) hardware needed to transmit discrete output signals to the Emergency Rod Insertion Panel (ERIP) in the RB. The discrete output signals are activated by input signals received from the RPS (that indicate a scram-follow function is active) or based upon input signals received from the N-DCIS (that indicate a ARI function or automatic SCRRI function is active) or by input signals from the two manual SCRRI pushbuttons on the Main Control Room Panel (MCRP).

Emergency Rod Insertion Panels

The ERIPs are located in the RB and provide discrete output signals to the induction motor controllers in the IMCCs. The discrete output signals are activated by input signals received from the ERICP that indicate the scram-follow function, the ARI function or the SCRRI function is active.

Scram Time Recording Panels

The Scram Time Recording Panels , located in the RB, monitor the FMCRD position reed switch status using Reed Switch Sensor Modules (RSSMs). They communicate this information to the

RAPI through the RC&IS multiplexing network. Also, the Scram Time Recording Panels automatically record and time tag FMCRD scram timing position reed switch status changes. This is done either after initiation of an individual HCU scram test at the RPS Scram Time Test Panel or after a full-core reactor scram has been initiated. The recorded scram timing data can be transmitted to the Scram Time Recording and Analysis Panel (STRAP) in the MCR back-panel area.

Scram Time Recording and Analysis Panel

The STRAP receives scram timing position information from the Scram Time Recording Panels and performs scram timing performance analysis. The recorded performance information can also be transmitted to the N-DCIS equipment for further data analysis and archiving.

RAPI Auxiliary Panels

RAPI Auxiliary Panels, located in the RB, provide output signals to open a purge water valve whenever either FMCRD associated with the corresponding HCU receives an insertion command from the RAPI subsystem. These panels also monitor scram valve position status as well as whether the scram accumulator water pressure and level status are normal or abnormal. Communication of this information to and from the RAPI subsystem is achieved through the N-DCIS equipment. Two or more of the nonsafety-related remote multiplexing unit (RMU) cabinets of the N-DCIS equipment are used as the RAPI auxiliary panels that are physically not part of the RC&IS equipment, even though they provide the RC&IS related functions described above.

7.7.2.2.2 Multiplexing Network

The RC&IS multiplexing network consists of two separate channels that use fiber-optic communication links. The first channel handles communication between the RACS and the RSPCs in the remote communication cabinets (through the FCMs), and communication between the Scram Time Recording Panels and the RACS. The second channel handles communication between the Scram Time Recording Panels and the STRAP. Communication between the RAPI auxiliary panels and the RAPI channels for HCU purge water valve control and HCU status monitoring is achieved by the N-DCIS equipment, not the RC&IS multiplexing network.

The plant Q-DCIS communication equipment interfaces with FMCRD dual redundant separation switches (A and B). It provides the appropriate status signals to the RACS cabinets used in the RC&IS logic for initiating rod block signals of the appropriate FMCRD if a separation occurs. The Q-DCIS communication equipment provides these signals to the RAPI SIUs of the RC&IS via communication with the N-DCIS through proper isolation. (Refer to Subsection 7.1.3.3 for additional information about the communication between Q-DCIS and N-DCIS.) The Q-DCIS and N-DCIS communication equipment is not part of the RC&IS equipment. Each RAPI SIU transmits status signals to the associated RAPI channel for use in the RAPI rod block logic.

7.7.2.2.3 Classification

The RC&IS is not classified as a safety-related system because it has a control design basis only and is not required for the safe and orderly shutdown of the plant. A failure of the RC&IS cannot result in gross fuel damage. The rod block function of the RC&IS, however, is important in limiting the potential consequences of a rod withdrawal error during normal plant operation, because it prevents an abnormal operating transient that might result in local fuel damage.

7.7.2.2.4 Power Sources

The Low Voltage Distribution System normally provides the required incoming 3-phase AC power for the induction motor controller equipment. This 3-phase AC power source is required by the IMCCs to energize the associated FMCRD induction motors and MBBs. The Low Voltage Distribution System also provides the required AC power for the RBC power supplies in the RBCCs, the ERIPs and the associated ERICP. The Medium Voltage Distribution System power bus and equipment design assures that the associated Low Voltage Distribution System equipment that provides required AC power to the IMCCs, RBCCs, and ERIPs is automatically powered from the standby AC diesel generators if the normal power source is lost. Excitation power required for logic in the ERICP is provided directly from the ERIPs.

The power distribution design provides four distinct electrical groups of power. The distribution of these four groups of electrical power to FMCRDs is such that approximately one fourth of the FMCRDs belong to each group. The FMCRDs in each electrical group are distributed throughout the reactor core so complete insertion of the FMCRDs (in any three of the four electrical groups to the full-in position) assures that the reactor reaches shutdown conditions. This approach provides increased reliability for the capability of the FMCRD motor Run-in function, if activated, to ensure that the reactor achieves shutdown conditions.

The power for all RC&IS equipment, except as noted above, is derived from two separate, non-divisional AC power sources (See Chapter 8) with at least one of the redundant AC power sources being a UPS. Redundant power supplies are also provided for this equipment so that failure of a single power source or of a single power supply does not result in the complete loss of capability of the RC&IS to perform rod movements. For certain types of power sources or supply failures, the operator has to perform appropriate bypass of the affected RC&IS equipment in order to restore rod movement capability.

On the loss of the normal power source, the nonsafety-related standby diesel generators provide an alternate power source for the IMCCs, RBCCs, and ERIPs.

7.7.2.2.5 **Scope**

The equipment in the RC&IS scope includes:

- The electrical/electronic equipment contained in the RACS cabinet, the remote communication cabinets, the IMCCs, the RBCCs, the Scram Time Recording Panels, the STRAP, the ERIPs, and the ERICP. (Note: RAPI auxiliary panels are designated as part of the N-DCIS).
- The RC&IS multiplexing network equipment.
- The cross-channel communication links between equipment located in the RACS cabinets.
- The dedicated RC&IS dedicated operator interface and the communication links from the RACS cabinets to this interface.

7.7.2.2.6 **Cabinet Subsystems**

The RACS cabinets each have four identical dual-channel subsystems: the RAPI, the RWM, the ATLM, and the RAPI SIU. This subsection describes the key functions performed by the RAPI and RWM subsystems.

The RAPI is the primary RC&IS equipment that performs the following functions.

- Accepts and responds appropriately to manual, semi-automatic, and automatic rod movement commands.
- Enforces rod blocks based upon signals, internal and external, to RC&IS. Internal RC&IS signals include those initiated from either of the two channels of rod blocks initiated by signals from the ATLM, RWM, RAPI SIU equipment, and those caused by any RAPI two-channel disagreement. External input signals to each RAPI channel that are used for the rod block logic originate from:
    - The four safety-related divisions of the RPS (required isolation provided by RPS related equipment).
    - The safety-related four-divisional Startup Range Neutron Monitor (SRNM) and Average Power Range Monitor (APRM) subsystems of the NMS (required isolation provided by the NMS).
    - The safety-related FMCRD dual redundant separation switches (A & B) of each control rod through Divisions 1 and 2 of the Q-DCIS communication (required isolation is provided by fiber-optic cable and one way communication links to the N-DCIS equipment).
    - The nonsafety-related dual-channel Multi-Channel Rod Block Monitor (MRBM) of the NMS.
    - Refueling equipment.
- Enforces adherence to a predetermined rod pull sequence that is stored in RRPS memory. The RRPS memory defines the order in which gangs of control rods are selected and moved when

either semi-automatic or automatic rod movements are performed (that is the equivalent to the pull sheet used by plant operators when performing manual rod movements for conventional Boiling Water Reactor [BWR] plants). Violation of the RRPS causes RAPI logic to issue:

- A switch to manual mode when the RC&IS is in the automatic rod movement mode or the semi-automatic rod movement mode.
- An alarm signal when the RC&IS is in the manual rod movement mode. (Gangs of rods can still be moved while in manual mode, but are limited to the RRPS gangs and only one gang at a time can be moved.)

- Provides control rod position and FMCRD status information to the N-DCIS, the NMS, the RWM, and the ATLM. The RAPI transmits signals required by the NMS, ATLM, and RWM to its associated RAPI SIU. The RAPI SIU then transmits required status signals to both channels of the ATLM, RWM, and the MRBM channels of the NMS.
- Provides the scram-follow function that automatically activates motor run-in of the ball nuts of all operable FMCRDs to the normal full-in position after a reactor scram has occurred. If the rapid hydraulic insertion function for any FMCRD does not work properly, this function provides an electric motor driven backup means to achieve full insertion of all operable FMCRDs.
- Provides the SCRRI function that results in automatic insertion of pre-defined control rods to specified target insertion positions so that required reactor power reduction is achieved when this function is activated. The RC&IS also sends a SCRRI signal to the DPS to initiate the SRI function.
- Provides for FMRCD motor Run-in of all control rods based on the receipt of the ARI initiation signals from the N-DCIS.
- Sends/receives rod movement commands, rod position, FMCRD status information and RC&IS related status information from the logic of all of the RSPC (A & B) of each RSM in the remote communication cabinets, by means of FCMs and the RC&IS multiplexing network. The RAPI also receives FMCRD position reed switch status information from the Scram Time Recording Panels by means of the RC&IS multiplexing network.
- Sends and receives information and control signals to and from the other RAPI channel.
- Sends HCU purge water valve control signals to, and receives HCU status signals from, the N-DCIS equipment.
- Provides for different CRD surveillance tests, including:
    - Scram Time Test
    - Coupling Check Test
    - Double-Notch Test

- Enforces the applicable RWM rod block by sending appropriate rod block signals to the logic of the RSPCs in the remote communication cabinets. Either channel of RWM can cause a rod block independently.

The RWM issues a rod withdrawal block signal and a rod insertion block signal that are used in the RAPI rod block logic. This rod block signal ensures the following.

- Absolute rod pattern restrictions, called the Ganged Withdrawal Sequence Restrictions (GWSRs) when reactor power is below the LPSP, are not violated. This is only applicable when the RPS Reactor Mode Switch is in either the Startup or Run position. The GWSR assure that control rod worths are maintained to within reasonable values by only allowing rod patterns that result in relatively low rod worths when control rods are withdrawn.
- Only the two control rods associated with the same HCU can be withdrawn for the 2-CRD scram time test when the RPS Reactor Mode Switch is in the Refuel position and the scram test mode has been activated. This function provides for performing individual HCU scram testing during planned refueling outages.

The RWM also includes logic for performing shutdown margin testing when the RPS Reactor Mode Switch is in the Startup position. This mode allows only a limited set of pre-specified control rods to be withdrawn to perform this special testing.

The ATLM issues internal rod withdrawal block signals within RC&IS. These signals, when the RC&IS is in the Automatic rod movement mode, cause the RC&IS to transfer to the manual rod movement mode. The ATLM-based rod block prevents violation of normal operating limit restrictions on fuel thermal limit values (MCPR and MLHGR operating limits), if operations stay in the automatic mode. The ATLM algorithm is based upon input signals from the LPRMs and APRMs of the NMS and control rod positions, status data, and other plant data from the RAPI signals transmitted from RAPI channels via the RAPI SIUs. The ATLM operating limit setpoints can be updated based upon calculated inputs from the core monitoring function of the N-DCIS. Updates of the ATLM setpoints can occur automatically or they can occur manually when the operator uses the N-DCIS VDU capabilities to request a manual ATLM update. Either channel of the ATLM can independently cause transfer to the Manual mode from the Automatic mode and rod withdrawal block initiation.

7.7.2.2.7 Operation Description

7.7.2.2.7.1 Single Rod Movements

Though this mode of rod movement is not normally used, the capability exists for the plant operator to perform manual movements of individual control rods. To perform this type of rod movement, the operator must select the manual, single rod movement mode by controls provided at the RC&IS dedicated operator interface, and designate the individual rod to be moved. After confirming that the

correct rod has been designated, the operator then selects the desired rod movement mode, either step movement, notch movement, or continuous mode.

Step movement means movements of 36.5 mm (1.44") nominal distance for each step movement activated except for the last withdrawal and first step movement from normal full-out position, which have a nominal step distance of 37.5 mm (1.48"). Notch movement means movement to the next rod position that is an integer multiple of 2 steps movement. In the continuous mode, rod movement continues as long as the operator activates a movement command, and after the operator deactivates the movement command, the rod settles to the effective target position.

To accomplish the desired movement in the selected movement mode, the operator activates the "insert" or "withdraw" movement command. This is done by activating associated hard pushbutton switches located adjacent to the RC&IS dedicated operator interface on the main control panel in the MCR. The desired rod movement occurs if no abnormal conditions, such as a rod block, are activated. If any of the higher priority automatic rod movement actions are activated (for example SCRRI, scram-follow, or ARI), these movements override the operator desired normal movement and are completed as required. This is true no matter what mode of normal rod movement is activated.

The RAPI of the RC&IS enforces rod blocks based upon signals internal or external to the system. These rod blocks can prevent desired rod movements or stop rod movements, if activated while normal rod movements are underway. This applies to both single rod movement and ganged rod movement modes.

The internal signals include those signals from ATLM and RWM. If there is any disagreement between the two-channel logic of the subsystems of the RC&IS, rod block signals are transmitted to the RSM unless one of the channels of logic has been manually bypassed.

Examples of external input signals which could cause rod withdrawal blocks include those from the SRNM and APRM subsystems, the MRBM subsystems of the NMS, and FMCRD separation status signals received from the Q-DCIS through data transmission to the RC&IS. A rod withdrawal block condition is activated from the corresponding FMCRD if the status of either separation switch A or B indicates that FMCRD separation has occurred, if the RPS Reactor Mode Switch is in the Startup or Run position, or a rod is currently selected for normal movement. A more complete list of rod block conditions is provided in Subsection 7.7.2.2.7.4.

When normal rod movements are performed (no abnormal conditions exist), the RAPI of the RC&IS transmits the appropriate rod movement command signals to a dual channel FCM located in a remote communication cabinet. These rod movement command signals are received at the dual channel FCM and routed to logic for the associated rod server processing channel RSPC A and RSPC B of the RSMs of the selected rod. They are then transmitted as channel A and channel B inputs for the corresponding induction motor controllers. Channel A and channel B brake energization signals are transmitted to the associated RBC. The induction motor controllers perform

two-out-of-two voting on the command signals received from the logic of both RSPCs. It then activates the proper power control signals to accomplish the FMCRD motor movement that provides the required 3-phase AC power output to the FMCRD motor and power to the associated MBB to perform the desired movement.

The RBC similarly performs two-out-of-two voting and energizes (mechanically releases) the FMCRD holding brake just prior to the start of FMCRD motor movement. It then de-energizes (mechanically engages) the FMCRD holding brake just after the desired normal rod movement is completed.

The RDCs of the RSM interface with instrumentation of the FMCRD, a subsystem of the CRD. They collect absolute rod position for the corresponding FMCRD by converting the resolver A and resolver B analog signals into digital data representing the FMCRD rod position. The data are used in the associated RSPCs' logic and transmission (via the RC&IS multiplexing system) to the RAPI logic and for the RAPI to transmit rod position data to other systems and subsystems and to the RC&IS dedicated operator interface.

7.7.2.2.7.2 Ganged Rod Movements

There are three means of controlling ganged rod motion. The RC&IS provides for automatic mode, semi-automatic mode, and manual mode. When in the automatic mode of operation, commands for insertion or withdrawal are received from the PAS.

The RC&IS dedicated operator interface provides controls for activating the automatic, semi-automatic, or manual rod movement mode of operation. When the system is in the semi-automatic mode, all rod movements are controlled by the operator. However, the RC&IS, by using a database called the RRPS and keeping track of the current control rods' positions, provides for automatic selection of the next gang, as required, to perform the sequence of rod movements in accordance with the RRPS definition. With this approach, the operator only needs to decide when to insert or withdraw control rods and does not have to decide which gang of control rods to select. This ensures that the RRPS sequence is followed.

When the RC&IS is in manual mode, the ganged rod movement mode has been chosen, and the operator selects a specific rod in a gang, the logic automatically selects all associated rods in that gang. The operator does not have to follow the RRPS sequence when performing manual rod movements; however, in order to re-establish either semi-automatic or automatic rod movement modes, the operator has to establish an initial rod pattern that is consistent with the RRPS allowed rod patterns.

When the automatic mode is active, the RC&IS responds to signals for a rod movement request from the PAS. In this mode, the PAS requests desired control rod insertion or withdrawal movements. The RC&IS responds to this request by using the RRPS and the current rods' positions and automatically selects the appropriate gang and executes the next-in-sequence withdrawal/insert commands as required.

In order for the automatic rod movement feature of the RC&IS to be active, the soft switch on the RC&IS-dedicated operator interface for automatic rod movement mode must be activated with none of the abnormal conditions that could prevent the RC&IS automatic operation mode from being active. The operator has the option of discontinuing the automatic operation by changing the RC&IS mode switches to the manual or the semi-automatic position.

7.7.2.2.7.3 Establishment of RRPS

The RRPS is normally established before plant startup and stored in the memory of the N-DCIS equipment and the RC&IS. The N-DCIS and RC&IS allow modifications to be made to the RRPS through operator actions. The N-DCIS provides compliance verification of the proposed changes to the RRPS with the ganged withdrawal sequence requirements.

The RC&IS provides the capability for an operator to request a download of the RRPS from the N-DCIS. The new RRPS data are loaded into the RAPI. Download of the new RRPS data can only be completed when the RC&IS is in manual rod movement mode and when a permissive switch located at the RAPI-A panel is activated. The RC&IS provides feedback signals to the N-DCIS to confirm a successful download of the RRPS data.

Rod withdrawal block signals are generated whenever selected single or ganged rod movements differ from those allowed by the RRPS. In the automatic or semi-automatic rod movement mode, the RC&IS provides for activation of an alarm at the operator's panel for an RRPS violation.

7.7.2.2.7.4 Rod Block Function

The rod block logic of the RC&IS, upon receipt of input signals from other systems and internal RC&IS subsystems, inhibits movement of control rods. In most cases, only a rod withdrawal block is activated. However, the RWM can also activate a rod insertion block for enforcement of the GWSR.

Rod block signals to the RC&IS from safety-related systems are appropriately isolated. This provides required isolation between safety-related and nonsafety-related systems while preventing electrical failures from propagating into the safety-related systems.

The presence of any rod block signal, in either channel or both channels of the RC&IS logic, causes automatic changeover from automatic mode to manual mode. The automatic rod movement mode can be restored by taking the appropriate action to clear the rod block and by using the RC&IS mode switch to restore the automatic rod movement mode.

If either channel or both channels of the RC&IS logic receives a signal from any of the following type of conditions, a rod block is initiated. These conditions are:

- Rod separation detection (rod withdrawal block only for those selected rod(s) for which the separation condition is detected and for which the rods are not in the Inoperable Bypass condition, applicable when the RPS Reactor Mode Switch is in the Startup or Run position).

- Reactor Mode Switch in Shutdown position (rod withdrawal block for all control rods, applicable when the RPS Reactor Mode Switch is in the Shutdown position).
- SRNM withdrawal block (rod withdrawal block for all control rods, not applicable when the RPS Reactor Mode Switch is in the Run position).
- APRM withdrawal block (rod withdrawal block for all control rods).
- Scram accumulator charging water header pressure - low (rod withdrawal block for all control rods).
- Scram accumulator charging water header pressure - low-low trip bypass (rod withdrawal block for all control rods).
- RWM withdrawal block (rod withdrawal block for all control rods, applicable below the Low Power Setpoint).
- RWM insert block (rod insertion block for all control rods, applicable below the low power setpoint).
- ATLM withdrawal block (rod withdrawal block for all control rods, not applicable below the ATLM enable setpoint).
- MRBM withdrawal block (rod withdrawal block for all control rods, not applicable below the ATLM enable setpoint).
- Ganged rods deviation (large misalignment between rods moving in gang) withdrawal block (rod withdrawal block for all operable control rods of the selected gang, applicable when RC&IS Gang mode selection is active).
- Refuel mode withdrawal block (rod withdrawal block for all control rods, applicable when the RPS Reactor Mode Switch is in the Refuel position and a fuel bundle is being handled by the refueling platform, and it is positioned over the RPV).
- Startup mode withdrawal block (rod withdrawal block for all control rods, applicable when the RPS Reactor Mode Switch is in the Startup position if the refueling platform is positioned over the reactor pressure vessel).
- RAPI trouble (rod withdrawal block and rod insertion block for all control rods).
- RAPI SIU trouble (rod withdrawal block for all control rods).
- Electrical group power abnormal (rod withdrawal block and rod insertion block for all control rods).

The RC&IS enforces all rod blocks until the rod block condition is cleared. The bypass capabilities of the RC&IS permit clearing certain rod block conditions that are caused by failures or problems that exist in only one channel of the logic.

7.7.2.2.7.5 RC&IS Reliability

The RC&IS has a high reliability and availability due to its dual channel configuration design. The design allows its continued operation, when practicable, in the presence of component hardware failures. This is achieved because the operator is able to reconfigure the operation of the RC&IS through bypass capabilities while the failures are being repaired.

The expected reliability is based upon the expected frequency of an inadvertent movement of more than one control rod, due to failure. The expected frequency is less than or equal to one inadvertent movement in 100 reactor operating years.

The RC&IS design ensures that no credible single failure or single operator error can cause or require a scram or require a plant shutdown. The RC&IS design preferentially fails in a manner that results in no further normal rod movement.

7.7.2.2.7.6 RC&IS Bypass Capabilities

The RC&IS provides the capability to bypass resolver A, or resolver B if either fails, and select resolver B, or resolver A, to provide rod position data to both channels of the RC&IS. The RC&IS logic prevents the simultaneous bypassing of both resolver signals for an individual FMCRD.

The RC&IS allows the operator to completely bypass up to eight control rods by declaring them "inoperable" and placing them in this bypass condition. More control rods can be bypassed when the RPS Reactor Mode Switch is in the Refuel position, as described below. Through operator action, an update to the status of the control rods placed into the "inoperable" bypass condition can be performed at the RC&IS dedicated operator interface.

Activating a new RC&IS "inoperable bypass status" to the RAPI is only allowed when the RC&IS is in a manual rod movement mode and when a bypass permissive switch located near the RC&IS dedicated operator interface on the main control panel in the MCR is activated.

The operator can substitute a position for the rod that has been placed in this bypass state in both channels of the RC&IS, if the substitute position feature is used. The substituted rod position value entered by the operator is used as the effective measured rod position that is stored in both RAPI channels and sent to other subsystems of the RC&IS and to other plant systems (such as the N-DCIS). The position substitution status of each FMCRD can also be displayed at the RC&IS dedicated operator interface and the RAPI dedicated operator interface.

To conduct periodic inspections on FMCRD components, the RC&IS allows up to 54 control rods to be placed in an "inoperable" bypass condition, when the RPS Reactor Mode Switch is in the Refuel position.

The RC&IS enforces effective rod movement blocks when the control rod has been placed in an inoperative bypass status. When the "inoperable" bypass status is active, the RC&IS logic does not send any rod movement or brake energization power to the associated FMCRD.

In response to activation of either normal rod movement or special insertion functions, such as ARI, control rods in this bypass condition do not respond to movement commands.

The RC&IS Single/Dual Rod Sequence Restriction Override (S/DRSRO) bypass feature allows the operator to perform special dual or single rod scram time surveillance testing at any power level of the reactor. In order to perform this test, it is often necessary to perform single or HCU pair rod movements that are not allowed normally by the sequence restrictions of the RC&IS. When a control rod or pair of control rods associated with an individual HCU is placed in a S/DRSRO bypass condition, the control rod(s) are no longer used to determine compliance with the RC&IS sequence restrictions (for example, the ganged withdrawal sequence and RRPS).

The operator can only perform manual rod movements of control rods in the S/DRSRO bypass condition. The logic of the RC&IS allows this manual single/dual rod withdrawal for special scram time surveillance testing. The operator can place up to two control rods associated with the same HCU in the S/DRSRO bypass condition. The dedicated RC&IS operator interface display contains status indication of control rods in the S/DRSRO bypass condition.

The RC&IS ensures that S/DRSRO bypass logic conditions have no effect on special insertion functions for ARI, SCRRI, or scram conditions. There is also no effect on other rod block functions, such as MRBM, APRM, or SRNM rod blocks.

The drive insertion following a single/dual rod scram test occurs automatically. The operator makes the necessary adjustment of control rods in the system prior to the start of the test for insertions, and restores the control rods to the desired positions after test completion.

In addition to the RC&IS bypass functions that affect both channels (the bypass capabilities are described above), there are additional RC&IS bypass functions that affect only one channel of the RC&IS. The interlock logic prevents the operator from placing both channels in bypass for these types of bypass conditions. Logic enforces bypass conditions to ensure that the capability to perform any special function (such as an ARI, scram following, and SCRRI) is not prevented by the bypass conditions.

The RC&IS logic provides for more restrictive rod motion when one channel is bypassed. The status and extent of the bypass functions can be determined at the RC&IS dedicated operator interface.

Normal rod movement capability is allowed by bypassing failed equipment in one RC&IS channel. After repair or replacement of the failed equipment is completed, the operator can restore the system or subsystem to a full two-channel operability. The operator has the capability to establish single-channel bypass conditions within the following systems / subsystems:

- RSPC channel A or B
- FCM channel A or B
- ATLM channel A or B

- RWM channel A or B
- RAPI channel A or B

7.7.2.2.7.7 Automated Thermal Limit Monitor Algorithm Description

The ATLM is a micro-processor based subsystem of the RC&IS that executes two different algorithms for enforcing fuel operating thermal limits when reactor power is above the ATLM enable setpoint. One algorithm enforces Operating Limit Minimum Critical Power Ratio (OLMCPR), and the other enforces the Operating Limit Maximum Linear Heat Generation Rate (OLMLHGR). For the OLMCPR algorithm, the core is divided into multiple regions, each consisting of 16 fuel bundles. For the OLMLHGR algorithm, each region is further vertically divided into four segments. During a calculation cycle, ATLM Rod Block Setpoints (RBS) are calculated for OLMCPR monitoring and for OLMLHGR monitoring. The calculated setpoints are compared with the real-time averaged LPRM readings for each region/segment. The ATLM issues a trip signal if any regionally averaged LPRM reading exceeds the calculated RBS. This trip signal causes a rod block within the RC&IS. The ATLM provides a FW temperature control valve one-way block and a rod withdrawal block if the reactor thermal power versus FW temperature combination is outside of the area allowed by the reactor power versus FW temperature map, or if a FW temperature decrease causes an approach to thermal limits. The ATLM calculates a reference FW temperature for the purpose of detecting a loss of feedwater heating event. During each pass through the algorithm, the reference temperature is set to the maximum of: the current FW temperature, the existing reference temperature, or the minimum allowed FW temperature for the current reactor power. The reference temperature is only allowed to decrease at a rate based on reactor power at or below 100% and MCPR limits. The ATLM provides a FW temperature control valve one-way block, rod withdrawal block, and SCRRI/SRI initiation, if the FW temperature decreases by more than 16.7°C (30°F) from the reference FW temperature.

The ATLM algorithm is also based upon control rod positions and status data and other plant data from the RAPI. The ATLM operating limit setpoints can be updated based upon calculated inputs from the core monitoring function of the N-DCIS. Updates of the ATLM setpoints can occur either automatically or by operator request.

7.7.2.2.7.8 Operational Considerations

The operator can perform manual or semi-automatic control rod movements, activate and deactivate the RC&IS automatic rod movement mode, and activate and deactivate RC&IS bypass conditions using the RC&IS dedicated operator interface in the MCR, along with associated control switches. In addition, the operator can determine the details of the RC&IS status and related FMCRD status information at this interface. Dedicated control switches are also provided on the MCR panel for manual initiation of an ARI function and for manual initiation of an SCRRI/SRI function. The DPS sends associated FMCRD motor Run-in and SCRRI initiation signals to the

RC&IS. The DPS directly activates the ARI valves of the CRD system for accomplishing the hydraulic ARI function.

7.7.2.2.7.9 Reactor Operator Information

The RC&IS dedicated operator interface provides the primary interface for the operator to access detailed RC&IS information, including details of the RC&IS status and related FMCRD status. RC&IS detection of abnormal conditions activates alarms so that the operator is notified of the change in RC&IS or FMCRD status. In addition, the RC&IS provides FMCRD position information and summary RC&IS and FMCRD status information to the N-DCIS equipment that provides for additional operator information to be displayed on other nonsafety-related VDUs in the MCR.

7.7.2.2.7.10 Setpoints

The RC&IS has no safety setpoints. The ATLM RBSs are continuously calculated when the reactor power is above the ATLM enable setpoint. These setpoints also depend upon the last operating thermal limit information received from the N-DCIS during an ATLM thermal limit update process. All other setpoints are established prior to plant startup operations and only adjusted, if needed, as a result of plant startup testing results. It is anticipated that none or very few of the RC&IS setpoints (besides the continual ATLM rod block setpoint updates) require adjustment as a result of startup testing results.

7.7.2.2.7.11 Environmental Considerations

The RC&IS is not required for safety-related purposes, nor is it required to operate after a design basis accident. This system is required to operate in the normal plant environmental conditions at the locations of the RC&IS equipment, in the back-panel area of the MCR and in applicable areas of the RB.

7.7.2.3 Safety Evaluation

The circuitry described for the RC&IS is completely independent of the circuitry controlling the scram valves. This separation of the scram and normal rod control functions prevents failures in the RC&IS circuitry from affecting the scram circuitry. The scram circuitry is discussed in Subsection 7.2.1. Because the RC&IS directly controls movement of each control rod as an individual unit, a failure that results in inadvertent movement of a control rod affects only one control rod. The malfunctioning of any single control rod does not impair the effectiveness of a reactor scram. Therefore, no single failure in the RC&IS prevents a reactor scram. Repair, adjustment, or maintenance of the RC&IS components does not affect the scram circuitry.

Chapter 15 examines the various failure mode considerations for this system. The expected DBEs analyzed in Subsections 15.2.3.1, 15.2.3.2, 15.3.1, 15.3.7, 15.3.8, and 15.3.9 envelope the failure modes associated with RC&IS digital controls.

Table 7.1-1 identifies the RC&IS and the associated codes and standards applied, in accordance with the SRP. This subsection addresses I&C systems conformance to regulatory requirements, guidelines, and industry standards.

7.7.2.3.1 **Code of Federal Regulations**

10 CFR 50.34(f)(2)(iii)[I.D.1], Human factors engineering principles applied to control room design:

- Conformance: The RC&IS design conforms to these requirements.

10 CFR 50.43(e), Innovative means of accomplishing safety functions:

- Conformance: When innovative means are used in the I&C design it complies with 10 CFR 50.43(e).

10 CFR 50.49, Environmental qualification of electric equipment important to safety for nuclear power plants:

- Conformance: The RC&IS conforms to these requirements. See Table 3.11-1 (Electrical and Mechanical Equipment for Environmental Qualification).

10 CFR 50.55a(a)(1), Quality standards for systems important to safety:

- Conformance: The RC&IS design conforms to this requirement for the use of the applicable standards.

10 CFR 50.62, Requirements for reduction of risk from ATWS events for light-water-cooled nuclear power plants:

- Conformance: The ATWS mitigation functions conform to these requirements.

10 CFR 52.47, Contents of applications; technical information, level of design information:

- Conformance: The level of detail provided for the RC&IS within the DCD conforms to this requirement.

10 CFR 52.47(a)(21), Resolution of unresolved and generic (medium- and high-priority) safety issues identified in NUREG-0933:

- Conformance: Resolution of unresolved and generic safety issues for I&C is discussed in Section 1.11.

10 CFR 52.47(a)(25), Interface requirements for portions of the plant not within scope of certified design application:

- Conformance: There are no interface requirements for this section.

10 CFR 52.47(b)(1), ITAAC in design certification application:

- Conformance: ITAAC are provided for the I&C systems and equipment in Tier 1.

10 CFR 52.47(c)(2), Innovative means to accomplish safety function design completeness requirements per 10 CFR 50.43(e):

- Conformance: The RC&IS design may use innovative means for accomplishing safety functions.

7.7.2.3.2 General Design Criteria

GDC 1, 2, 4, 12, 13, 19, 24, 25, 26, 27, 28 and 29:

- Conformance: The RC&IS complies with these GDC.

7.7.2.3.3 Staff Requirements Memoranda

SRM on Item II.Q of SECY 93-087:

- Conformance: The portions of RC&IS that provide interface support for DPS conform to these criteria.

7.7.2.3.4 Regulatory Guides

RG 1.89, Environmental Qualification of Certain Electric Equipment Important to Safety for Nuclear Power Plants:

- Conformance: See Table 3.11-1 (Electrical and Mechanical Equipment for Environmental Qualification).

RG 1.97, Criteria for Accident Monitoring Instrumentation for Nuclear Power Plants:

- Conformance: The ESBWR I&C conforms to RG 1.97. Specific instruments credited for RG 1.97 compliance are determined as part of the HFE development process as discussed in Section 7.5.

RG 1.100, Seismic Qualification of Electric and Mechanical Equipment for Nuclear Power Plants:

- Conformance: See Sections 3.9 (Mechanical Systems and Components) and 3.10 (Seismic and Dynamic Qualification of Mechanical and Electrical Equipment).

RG 1.152, Criteria for Use of Computers in Safety Systems of Nuclear Power Plants:

- Conformance: The RC&IS design conforms to RG 1.152.

RG 1.168, Verification, Validation, Reviews, and Audits for Digital Computer Software Used in Safety Systems of Nuclear Power Plants:

- Conformance: The RC&IS design conforms to RG 1.168.

RG 1.169, Configuration Management Plans for Digital Computer Software Used in Safety Systems of Nuclear Power Plants:

- Conformance: The RC&IS design conforms to RG 1.169.

RG 1.170, Software Test Documentation for Digital Computer Software Used in Safety Systems of Nuclear Power Plants:

- Conformance: The RC&IS design conforms to RG 1.170.

RG 1.171, Software Unit Testing for Digital Computer Software Used in Safety Systems of Nuclear Power Plants:

- Conformance: The RC&IS design conforms to RG 1.171.

RG 1.172, Software Requirements Specifications for Digital Computer Software Used in Safety Systems of Nuclear Power Plants:

- Conformance: The RC&IS design conforms to RG 1.172.

RG 1.173, Developing Software Life Cycle Processes for Digital Computer Software Used in Safety Systems of Nuclear Power Plants:

- Conformance: The RC&IS design conforms to RG 1.173.

RG 1.180, Guidelines for Evaluating Electromagnetic and Radio-Frequency Interference in safety-related Instrumentation and Control Systems:

- Conformance: The RC&IS design conforms to RG 1.180. See Table 3.11-1 (Electrical and Mechanical Equipment for Environmental Qualification).

RG 1.209, Guidelines for Environmental Qualification of Safety-Related Computer-Based Instrumentation and Control Systems in Nuclear Power Plants:

- Conformance: See Table 3.11-1 (Electrical and Mechanical Equipment for Environmental Qualification).

7.7.2.3.5 **Branch Technical Positions**

BTP HICB-10, Guidance on Application of Regulatory Guide 1.97:

- Conformance: The ESBWR I&C conforms to RG 1.97. Specific instruments credited for RG 1.97 compliance are determined as part of the HFE development process as discussed in Section 7.5.

BTP HICB-16, Guidance on the Level of Detail Required for Design Certification Applications Under 10 CFR Part 52:

- Conformance: The level of detail provided for the RC&IS design conforms to BTP HICB-16.

BTP HICB-19, Guidance for Evaluation of Defense-in-Depth and Diversity in Digital Computer-Based Instrumentation and Control Systems:

- Conformance: The portions of RC&IS that provide interface support for DPS conform to BTP HICB-19.

7.7.2.4 Testing and Inspection Requirements

The RC&IS equipment is designed with consideration for on-line testing capabilities. The system can be maintained on line while repairs or replacement of hardware take place without causing any abnormal upset condition. The single-channel bypass capabilities support having continued RC&IS operation while repair or maintenance work is being performed on the dual-channel portion of the RC&IS equipment.

7.7.2.5 Instrumentation and Control Requirements

The CRD system is the RC&IS main direct interface to gather control rod position information and FMCRD status information and execute control rod movement commands. The FMCRD-related instrumentation that provides direct input to the RC&IS is addressed as part of the CRD system in Subsection 4.6.1. The primary output of the RC&IS to accomplish the RC&IS related rod movement functions is the 3-phase AC power to the FMCRD motors, associated AC power to the MBBs, and the holding brakes of the CRD system.

The RC&IS modules that interface with FMCRD instrumentation include the appropriate signal conditioning and conversion components (for example, RDC, discrete contact closure or reed switch input circuitry, and excitation power sources/supplies) for acquisition of the following signals:

- Resolver A and B position feedback (continuous signals).
- Coupling check (overtravel-out) position reed switch (discrete signal).
- Full-in and full-in latched position reed switches (discrete signal; these two reed switches are wired in parallel).
- Buffer contact reed switch (discrete signal).
- Scram timing position reed switches (discrete signals) at the following positions:
    - 0% insertion
    - 10% insertion
    - 40% insertion
    - 60% insertion
    - 100% insertion

The induction motor controllers provide the proper 3-phase power to the FMCRD motor, the directly associated MBB, and the holding brakes of the CRD system to accomplish the RC&IS rod movement functions.

The RC&IS does not directly interface with any other basic plant instrumentation. The other inputs to the RC&IS are by hardwired signal interfaces, data communication links with other systems, or from the RC&IS dedicated operator interface.

7.7.3 Feedwater Control System

The FWCS accomplishes both RPV water level control and FW temperature control. RPV water level control is accomplished by manipulating the speed of the FW pumps. FW temperature control is accomplished by manipulating the heating steam flow to the seventh stage FW heaters or directing a portion of the FW flow around the high-pressure FW heaters. The two functions are performed by two sets of triple redundant fault-tolerant digital controllers (FTDCs) located in separate cabinets. Each set of FTDCs is dedicated to perform one function. The ESBWR HP FW Heater Temperature Control Diagram is provided in Figure 7.7-7.

7.7.3.1 System Design Bases

7.7.3.1.1 Safety-Related Design Bases

The FWCS is not a safety-related system and is not required for safe shutdown of the plant. Therefore, the FWCS has no safety-related design basis. In the power operation mode, only one of the triple-redundant controllers can be removed from service. Refer to Subsection 7.3.3 (the LD&IS) for FW line isolation protections.

7.7.3.1.2 Power Generation (Nonsafety) Design Bases

The FWCS is designed so that the functional capabilities of safety-related systems are not inhibited. The FWCS regulates the flow of FW into the RPV to maintain predetermined water level limits during transients and normal plant operating modes; additionally, the FWCS controls FW temperature to allow reactor power control without moving control rods. The desired range of water level during normal power operation is based on steam separator performance. The requirements include limiting carryover, which can affect turbine performance, and limiting carryunder, which can affect overall plant efficiency. FW temperature control allows independent control of temperature above or below the temperature normally provided by the FW heaters with turbine extraction steam. An increase in FW temperature decreases reactor power and a decrease in FW temperature increases reactor power. FW temperature is normally set manually by the operator. The setpoint can also be adjusted by the Plant Automation System (PAS). There is a maximum allowable FW temperature setpoint change that cannot be exceeded. FW temperature cannot be decreased when the reactor thermal power exceeds 100%. The system does not accept a temperature setpoint outside of the area allowed by the reactor power versus FW temperature map which is described in Subsection 4.4.4.3.

If the RPV water rises to Level 8, equipment protective action trips the main turbine and reduces FW demand to zero. The DPS trips the FW pumps if the water continues to rise to Level 9. If the water falls to Level 3, the RPS, an independent safety-related system (Subsection 7.2.1), shuts down the reactor. If the water level continues to drop and reaches Level 2, the high-pressure makeup function of the CRD system is initiated (Reference Figure 7.7-1, Water Level Range Definition). The CRD system is independent of other plant delivery or injection systems. If the

reactor thermal power versus FW temperature combination is outside of the area allowed by the reactor power versus FW temperature map, the RC&IS ATLM initiates a control rod withdrawal block and a FW temperature control valve one-way block. If the reactor thermal power versus FW temperature combination further departs from the area allowed by the reactor thermal power versus FW temperature map (high reactor thermal power, high feedwater temperature or low feedwater temperature), the RPS initiates a reactor shutdown.

7.7.3.2 System Description

7.7.3.2.1 General Description

The FWCS is a power generation (control) system that maintains proper RPV water level in the high (Level 8) to low (Level 3) operating range. During normal operation, FW flow is delivered to the RPV through three Reactor Feed Pumps (RFPs), which operate in parallel. Each RFP is driven by an adjustable-speed induction motor that is controlled by an adjustable speed drive (ASD). In normal operation, the fourth RFP is in standby mode and starts automatically if any operating FW pump trips while at power. In abnormal operation, the fourth RFP can be set in manual mode or can be removed from service for maintenance. The reactor FW pumps receive suction from the FW booster pump discharge header. The FW booster pumps draw suction from the fourth open FW heater tank and increase FW pressure to the required suction pressure of the reactor FW pumps. There are four FW booster pumps with three in service during normal operation and the fourth in standby. In normal operation, FW temperature is controlled by FW heaters one through six using turbine extraction steam. If increased FW temperature is demanded, modulating valves admit steam from the main steam header to the seventh FW heater. If decreased FW temperature is demanded, modulating valves direct a part of the FW flow around the fifth, sixth, and seventh FW heaters.

Each function of the FWCS is implemented on its own dedicated set of triple redundant FTDCs, including power supplies and input/output signals. The controller is designed for a Mean Time to Failure (MTTF) of no less than 1000 years. Each set of FTDCs consists of three parallel processing controllers, each containing the hardware and software for execution of the control algorithms. Each FTDC executes the control software for the control modes. At the operator's discretion, the system operation mode can be selected from the main control console. The FWCS functional diagram is provided in Figure 7.7-3.

During normal operation the FWCS sends three speed-demand signals, each of which reflects a voted FWCS output, to each feed pump ASD. The ASD performs a mid-value vote and uses it to control the speed/frequency of the feed pump motor. The mid-value vote is also returned to the FWCS as an analog input and compared with the speed demands sent by the FWCS. If an FTDC detects a discrepancy between the field voter output and the FTDC output, a "lock-up" signal is sent to a "lock-up" voter which causes the feed pump ASD to maintain the current pump speed and activates an alarm in the MCR.

During FW temperature control, the FWCS sends a voted (median selected) position demand to either the modulating valves admitting steam to the seventh FW heater or the modulating valves directing a part of the FW flow around the fifth, sixth, and seventh FW heaters. This position demand and the actual valve position are returned to the FWCS as analog inputs and compared with the position demands sent by the FWCS. If an FTDC channel detects a discrepancy between the field voter output and the FTDC channel output, a lock-up signal is sent to a lock-up voter that maintains the valve position and activates an alarm in the MCR. For drawings of the FW system, FW heater, pump and valve configuration, see Section 10.4.

7.7.3.2.2 **Operation Modes (Level Control)**

The following modes of RPV water level control are provided.

- **Single Element Control** - At less than 25% of rated reactor power the FWCS uses single-element control based on RPV water level. In this mode the conditioned level error from the master level (proportional + integral, or PI) controller is used to determine the demand to either the Low Flow Control Valve (LFCV) or to an individual feed pump ASD. The ASDs control feed pump motor speed and thus FW flow rate. In addition, the FWCS can regulate the RWCU/SDC system Overboard Control Valve (OBCV) demand to counter the effects of density changes and purge flows into the reactor during heatup when the steam flow rate is low.
- **Three-Element Control** - During normal power range operation, the three-element control mode uses water level, total FW flow rate, total steam flow rate, and individual feed pump suction flow rate along with pressure signals to determine the feed pump speed demand. The total FW flow rate is subtracted from the total steam flow rate signal to yield the RPV flow rate mismatch. The flow rate mismatch signal is summed with the conditioned level error signal from the master level controller to provide the input signal for the master flow controller. The master flow controller provides the demand signal to the individual RFP loop trim controllers that use the suction flow rate signals to balance RFP flow rate demand. The master flow controller output plus trim controller output are used to generate the speed demand signal to the ASDs that control feed pump motor speed and thus FW flow rate.
- **Manual Feed Pump Control** - Each RFP can be controlled manually from the main control console through the FTDC by selecting the manual mode for that pump. In manual mode, the RFP speed demand signal that is sent directly to the ASD of the selected feed pump has the capability of being increased or decreased. Each feed pump is controlled manually at the manual/automatic transfer station.

The FWCS also provides interlocks and control functions to other systems. If the reactor water level reaches Level 8, the FWCS simultaneously activates a MCR alarm, sends a zero-speed demand signal to the feed pump ASDs, and trips the turbine. On identification of an ATWS condition, the FWCS sends a zero-flow demand signal to the feedpump ASDs. In addition, the FWCS initiates the

signal to open the steam line condensate drain valves when steam flow rate falls below 40% of nominal.

The worst case of a FW Pump ASD controller failure in the FW system would cause a run-out of one FW pump to its maximum flow rate. In the event of a one pump run-out (detected by FW flow high), the FWCS would respond by reducing the demand to the other pumps, automatically compensating for the excessive flow rate from the failed pump.

7.7.3.2.3 **Operation Modes (Temperature Control)**

The modes of FW temperature control are as follows:

- Manual — the FW temperature setpoint is controlled by the operator.
- Automatic — the FW temperature setpoint is controlled by the PAS.

Both modes of FW temperature control use eight FW temperature measurements, four per FW line. These redundantly measured temperatures are compared with the temperature setpoint and the error signal is used by a Proportional, Integral, Derivative controller. The Proportional, Integral, Derivative controller output range is between -100% to +100% depending on whether heating or cooling of the FW is required. The output signals are used to generate the position demands for both the FW heater bypass valves and the seventh FW heater steam heating valves.

Both the manual and automatic modes of FW temperature control include the following features.

- Neither the operator nor the automation system can input a setpoint outside the area allowed by the reactor power versus FW temperature operating map (Power-FW temperature Map). The FW temperature operating map is adjustable per fuel cycle and described in Subsection 4.4.4.3.
- Neither the operator nor the automation system can change the setpoint faster than an allowable rate (nominally 55.6°C (100°F) per hour).
- No FW temperature control mode can be entered unless the controller has passed all its self-diagnostic tests and unless the operator has actively selected the control mode.
- The FW temperature controller is unable to decrease FW temperature if the reactor thermal power is greater than 100%. The validated reactor thermal power signal is provided by the NMS.
- Individual temperature control valves are "locked up" if they are not at their demanded position within a prespecified time or one-way "locked up" if there is an ATLM one-way block. To prevent FW temperature from additional decrease (increase), the steam heating valves and the bypass valves are blocked from further opening (closing).
- The heating valves to the seventh FW heater and the high-pressure FW heater bypass valves are not opened simultaneously.

7.7.3.3 Safety Evaluation

The FWCS is a power generation system that maintains proper RPV water level and FW temperature. Its level control range is from high water level (Level 8) to low water level (Level 3) and its nominal FW temperature control range at 100% rated power is from 188°C (370°F) to 215.6°C (420°F). FW temperature can be increased up to 252.2°C (486°F) which reduces the rated reactor power by approximately 15%. The RPV water level rising to Level 8 or falling to Level 3 results in the shutdown of the reactor by the RPS. If the RPV water level rises too high (Level 8), the main turbine trips, the ASD feed pump flow demand is reduced to zero, and the safety-related FW isolation valves are closed by LD&IS. Continued rising water level to Level 9 results in a trip of all ASD feed pumps by the DPS and the ASD controller power supply being interrupted by LD&IS . If the reactor thermal power versus FW temperature combination is outside of the area allowed by the reactor power versus FW temperature map, the RC&IS initiates a control rod withdrawal block and FW temperature control valve one-way block. If the reactor thermal power versus FW temperature combination further departs from the area allowed by the reactor power versus FW temperature map (high reactor thermal power, high feedwater temperature or low feedwater temperature), the RPS initiates reactor shutdown. The RPS uses eight safety-related measurements of FW temperature (two per division) and implements a reactor scram using two-out-of-four logic based on a validated reactor thermal power. Refer to Subsection 7.2.1 for the RPS description.

The FWCS initiates a runback of FW pump FW demand to zero and closes the LFCV and RWCU/SDC OBCV when it receives an ATWS trip signal from the ATWS/SLC Logic. Refer to Subsection 7.8.1.1.

A combined FW temperature change and FW flow/reactor water level change caused by controller failure is precluded by implementing the two control schemes in physically different cabinets and controller application processors.

A loss of FW heating that results in a significant decrease in FW temperature is independently detected by the ATLMs and by the DPS, either of which will mitigate the event by initiating SCRRI and SRI functions. These interlocks mitigate the effects of a reactor power increase due to reduced FW temperature. Although no credit is taken for the function in a safety analysis, the FW temperature control system also mitigates inadvertent FW temperature changes in either direction by manipulating its control valves to maintain the setpoint temperature. The temperature difference between FW lines A and B is monitored and indicated if it exceeds the allowable value.

A total failure of the triple redundant FW temperature control system such that the outputs all fail downscale (or upscale), and the heating steam valves close (or open), or the bypass valves close (or open) is highly unlikely. No single failure or operator error of the FW temperature control system results in more than a 55.6°C (100°F) decrease in the final FW temperature. The design meets the requirements for the condensate and FW system specification in Subsection 10.4.7.1.

Chapter 15 examines the various failure mode considerations for this system. The expected DBEs are analyzed in Subsections 15.2.4.2, 15.3.1, and 15.3.2 envelope the failure modes associated with the FWCS digital controls.

Table 7.1-1 identifies the FWCS and the associated codes and standards applied, in accordance with the SRP. This subsection addresses I&C systems conformance to regulatory requirements, guidelines, and industry standards.

7.7.3.3.1 **Code of Federal Regulations**

10 CFR 50.34(f)(2)(iii)[I.D.1], Human factors engineering principles applied to control room design:

- Conformance: The FWCS design conforms to these requirements.

10 CFR 50.43(e), Innovative means of accomplishing safety functions:

- Conformance: When innovative means are used in the I&C design it complies with 10 CFR 50.43(e).

10 CFR 50.49, Environmental qualification of electric equipment important to safety for nuclear power plants:

- Conformance: The FWCS conforms to these requirements. See Table 3.11-1 (Electrical and Mechanical Equipment for Environmental Qualification).

10 CFR 50.55a(a)(1), Quality standards for systems important to safety:

- Conformance: The FWCS design conforms to this requirement for the use of the applicable standards.

10 CFR 50.62, Requirements for reduction of risk from ATWS events for light-water-cooled nuclear power plants:

- Conformance: The ATWS mitigation functions are designed in accordance with the requirements of 10 CFR 50.62.

10 CFR 52.47, Contents of applications; technical information, level of design information:

- Conformance: The level of detail provided for the FWCS within the DCD conforms to this requirement.

10 CFR 52.47(a)(21), Resolution of unresolved and generic (medium- and high-priority) safety issues identified in NUREG-0933:

- Conformance: Resolution of unresolved and generic safety issues is discussed in Section 1.11.

10 CFR 52.47(a)(25), Interface requirements for portions of the plant not within scope of certified design application:

- Conformance: There are no interface requirements for this section.

10 CFR 52.47(b)(1), ITAAC in design certification application:

- Conformance: ITAAC are provided for the I&C systems and equipment in Tier 1.

10 CFR 52.47(c)(2), Innovative means to accomplish safety function design completeness requirements per 10 CFR 50.43(e):

- Conformance: The FWCS design may use innovative means for accomplishing safety functions.

7.7.3.3.2 General Design Criteria

GDC 1, 2, 4, 13, 19, and 24:

- Conformance: The FWCS design complies with these GDC.

7.7.3.3.3 Staff Requirements Memoranda

SRM on Item II.Q of SECY 93-087:

- Conformance: The portions of FWCS that provide interface support for DPS conform to these criteria.

7.7.3.3.4 Regulatory Guides

RG 1.89, Environmental Qualification of Certain Electric Equipment Important to Safety for Nuclear Power Plants:

- Conformance: See Table 3.11-1 (Electrical and Mechanical Equipment for Environmental Qualification).

RG 1.97, Criteria for Accident Monitoring Instrumentation for Nuclear Power Plants:

- Conformance: The ESBWR I&C conforms to RG 1.97. Specific instruments credited for RG 1.97 compliance are determined as part of the HFE development process as discussed in Section 7.5.

RG 1.100, Seismic Qualification of Electric and Mechanical Equipment for Nuclear Power Plants:

- Conformance: See Sections 3.9 (Mechanical Systems and Components) and 3.10 (Seismic and Dynamic Qualification of Mechanical and Electrical Equipment).

RG 1.151, Instrument Sensing Lines:

- Conformance: The FWCS receives signals from sensors on vessel instrument lines in the NBS. Refer to Subsection 7.7.1.3 for a discussion of the guidance of RG 1.151 in relation to the NBS.

RG 1.152, Criteria for Use of Computers in Safety Systems of Nuclear Power Plants:

- Conformance: The FWCS design conforms to RG 1.152.

RG 1.168, Verification, Validation, Reviews, and Audits for Digital Computer Software Used in Safety Systems of Nuclear Power Plants:

- Conformance: The FWCS design conforms to RG 1.168.

RG 1.169, Configuration Management Plans for Digital Computer Software Used in Safety Systems of Nuclear Power Plants:

- Conformance: The FWCS design conforms to RG 1.169.

RG 1.170, Software Test Documentation for Digital Computer Software Used in Safety Systems of Nuclear Power Plants:

- Conformance: The FWCS design conforms to RG 1.170.

RG 1.171, Software Unit Testing for Digital Computer Software Used in Safety Systems of Nuclear Power Plants:

- Conformance: The FWCS design conforms to RG 1.171.

RG 1.172, Software Requirements Specifications for Digital Computer Software Used in Safety Systems of Nuclear Power Plants:

- Conformance: The FWCS design conforms to RG 1.172.

RG 1.173, Developing Software Life Cycle Processes for Digital Computer Software Used in Safety Systems of Nuclear Power Plants:

- Conformance: The FWCS design conforms to RG 1.173.

RG 1.180, Guidelines for Evaluating Electromagnetic and Radio-Frequency Interference in Safety-Related Instrumentation and Control Systems:

- Conformance: The FWCS design conforms to RG 1.180. See Table 3.11-1 (Electrical and Mechanical Equipment for Environmental Qualification).

RG 1.209, Guidelines for Environmental Qualification of Safety-Related Computer-Based Instrumentation and Control Systems in Nuclear Power Plants:

- Conformance: See Table 3.11-1 (Electrical and Mechanical Equipment for Environmental Qualification).

7.7.3.3.5 **Branch Technical Positions**

BTP HICB-16, Guidance on the Level of Detail Required for Design Certification Applications Under 10 CFR Part 52:

- Conformance: The level of detail in this subsection conforms to BTP HICB-16.

BTP HICB-19, Guidance for Evaluation of Defense-in-Depth and Diversity in Digital Computer-Based Instrumentation and Control Systems:

- Conformance: The portions of FWCS that provide interface support for DPS conform to BTP HICB-19.

7.7.3.4 Testing and Inspection Requirements

The FTDC self-test and on-line diagnostic test features are capable of identifying and isolating failures of process sensors, Input/Output (I/O) cards, power buses, power supplies, controller application processors and data communication links. These features identify the presence of a fault and determine the location of the failure down to the module level.

The FWCS components and critical components of interfacing systems are tested to ensure that specified performance requirements are satisfied. Preoperational testing of the FWCS is performed before fuel loading and startup testing to ensure that the system functions as designed and that stated system performance is within specified criteria.

7.7.3.5 Instrumentation and Control Requirements

7.7.3.5.1 Power Sources

Redundant UPSs power the FWCS digital controllers and process measurement equipment. No single power source or single power supply failure results in the loss of FWCS functions.

7.7.3.5.2 Equipment

The FWCS consists of:

- The FTDC that contains the software and controller application processors for execution of the control algorithms.
- FW flow rate signals that provide the measurement of the total flow rate of FW into the RPV.
- Steam flow rate signals that provide the measurement of the total flow rate of steam leaving the RPV.
- Feed water pump discharge flow rate signals that provide the measurement of the discharge flow rate of each feed pump.
- The LFCV differential pressure sensors that provide the measurement of the pressure drop across the LFCV, for LFCV gain control.
- The LFCV flow sensors that provide the measurement of the flow rate through the LFCV, for both LFCV control and low thermal power calculations.
- FW temperature signals that provide the measurement of the FW temperature at the point prior to the FW penetration to the Reactor Building.

7.7.3.5.3 Reactor Vessel Water Level Measurement

Reactor vessel narrow-range water level is measured by at least three identical, independent sensing systems. For each level measurement channel, a differential pressure sensor detects the difference between the pressure caused by a constant reference column of water and the pressure caused by the variable height of water in the RPV. The differential pressure sensors are part of the NBS. (Refer to Subsection 7.7.1.2 for a description of the RPV instrumentation). The FWCS FTDC determines one validated narrow-range level signal using the multiple level measurements as inputs to a signal validation algorithm. The validated narrow-range water level is indicated on the main control console in the MCR.

7.7.3.5.4 Steam Flow Rate Measurement

The steam flow rate in each of four main steam lines is sensed at each RPV nozzle venturi, the sensors are part of NBS. Refer to Subsection 7.7.1.2 for a description of the NBS instrumentation. Two flow sensors per steam line, which are part of the FWCS, detect the venturi differential pressure and send these signals to the FTDC through the multiplexing function of the N-DCIS. The FWCS multiplexing function signal-conditioning algorithms take the square root of the venturi differential pressures and provide eight steam flow rate signals, two for each steam line, to the FTDC for validation. Validated steam line flow rate measurements are summed in the FTDC to give the total steam flow rate out of the RPV. The total steam flow rate is indicated on the main control console in the MCR.

7.7.3.5.5 Feedwater Flow Rate Measurement

FW flow rate is sensed at a single flow element in each of the two FW lines, which are part of the Condensate and Feedwater System (C&FS). Three sensors per FW line, which are part of the FWCS, detect the differential pressure and send these signals to the FTDC through the N-DCIS multiplexing function. The FWCS multiplexing function signal conditioning algorithms take the square root of the differential pressure and provide six FW flow rate signals, three for each FW line, to the FTDC for validation. These validated FW line flow rate measurements are summed in the FTDC to give the total FW flow rate into the RPV. The total FW flow rate is indicated on the main control console in the MCR.

Feed pump flow rate is sensed at a single flow element, which is part of the C&FS, upstream of each feed pump. The suction line flow element differential pressure is detected by three sensors, which are part of the FWCS, and sent to the FTDC through the N-DCIS multiplexing function. The FWCS multiplexing function signal conditioning algorithms take the square root of the differential pressure and provide the suction flow rate measurements to the FTDC. The feed pump suction flow rate is compared with the demand flow rate for that pump and the resulting difference is used to adjust the speed demand to the ASD to reduce that difference and balance RFP flow rate between operating pumps.

7.7.4 Plant Automation System

7.7.4.1 System Design Bases

7.7.4.1.1 Safety Design Bases

The PAS has no safety-related design basis, but is designed so that the functional capabilities of safety-related systems are not hindered. Abnormal events requiring control rod scrams are sensed and controlled by the safety-related RPS, which is independent of the PAS. Discussions of the RPS are provided in Subsection 7.2.1.

The PAS provides the capability for supervisory control of the entire plant. It does this by supplying setpoint commands to independent nonsafety-related automatic control systems as changing load demands and plant conditions dictate.

7.7.4.1.2 Power Generation (Non-Safety) Design Bases

The power generation basis of this system is to provide supervisory control that regulates reactivity during criticality control, provides heatup and pressurization control, regulates reactor power, controls turbine/generator output, controls secondary nonsafety-related systems, and provides reactor startup / shutdown controls.

7.7.4.2 System Description

The primary purposes of the PAS are reactivity control, heatup and pressurization control, reactor power control, generator power control (MWe control), and plant shutdown control. The PAS consists of triple redundant process controllers. The functions of the PAS are accomplished by suitable algorithms for different modes of reactor operation which include approach to criticality, heatup, reactor power increase, automatic load following, reactor power decrease, and shutdown. The N-DCIS accepts one-way communication from the Q-DCIS so that the safety-related information can be monitored, archived, and indicated seamlessly with the N-DCIS data.

Through the N-DCIS, the PAS receives input from the following major safety-related systems: NMS (Subsection 7.2.2) and the RPS (Subsection 7.2.1). Through the N-DCIS, the PAS receives input from the following major nonsafety-related systems: the RC&IS (Subsection 7.7.2), SB&PC System (Subsection 7.7.5), FWCS (Subsection 7.7.3), RWCU/SDC (Subsection 7.4.3), and the Turbine Generator Control System (TGCS) (Subsection 10.2.2). The output demand request signals from the PAS are sent to the RC&IS to position the control rods, to the SB&CS for pressure setpoints, and to the TGCS for load following operation. A simplified functional block diagram of the PAS is provided in Figure 7.7-4.

The PAS interfaces with the MCR main control console to perform its designed functions. From the MCR main control console for automatic plant startup, power operation, and shutdown functions, the operator uses the PAS to issue supervisory control commands to nonsafety-related systems. The operator also uses the PAS to adjust setpoints of lower level controllers to support automation

of the normal plant startup, shutdown, and power range modes. In plant automation, the PAS also issues command signals to the turbine master controller, which contains appropriate algorithms for automated sequences of turbine and related auxiliary systems. The PAS presents the operator with a series of break point controls on the main control console nonsafety-related VDUs for a prescribed plant operation sequence.

When all the prerequisites are satisfied for a prescribed breakpoint in a control sequence, a permissive is requested and upon operator acceptance, the prescribed control sequence is initiated or continued. The PAS then initiates demand signals to various system controllers to carry out the pre-defined control functions. For non-automated operations that are required during normal startup or shutdown (such as a change of Reactor Mode Switch status), automatic prompts are provided. Automated operations continue after the prompted actions are completed manually. The functions associated with reactor power control are performed by the PAS.

For reactor power control, the PAS contains algorithms that can change reactor power by control rod motions. A prescribed control rod sequence is followed when manipulating control rods for reactor criticality, heatup, power changes, and automatic load following. For reactor power control by FW temperature change, the PAS can provide the FW temperature control setpoint to allow reactor power maneuvering without moving control rods. Each of these functions has its own algorithm to achieve its design objective. In combination, the two reactor power control methods are utilized to form a sequential step-by-step power maneuvering strategy for the control rod pattern/movement and FW temperature change. During automatic load following operation, the PAS interfaces with the TGCS to coordinate main turbine and reactor power changes for stable operation and performance.

The normal mode of operation of the PAS is automatic. If any system or component conditions are abnormal during execution of the prescribed sequences, the PAS automatically switches into the manual mode. With the PAS in the manual mode, any in-progress operation stops and alarms are activated in the MCR. Also with the PAS in manual mode, the operator can manipulate control rods through the normal controls. A failure of the PAS does not prevent manual control of reactor power, and does not prevent safe shutdown of the reactor.

The triple redundant FTDC and redundant system controllers perform the PAS control functional logic.

7.7.4.3 Safety Evaluation

The PAS does not perform or ensure any safety-related function. This system is designed so that functionalities of safety-related systems in the plant are not affected by it.

Chapter 15 examines the various failure mode considerations for this system. The expected DBEs analyzed in Subsections 15.2.3.1, 15.2.3.2, 15.3.8, and 15.3.9 envelope the failure modes associated with the PAS digital controls and the RC&IS digital controls. The expected DBEs analyzed in Subsections 15.2.5.1, 15.3.3, 15.3.4, 15.3.5 and 15.3.6 envelope the failure modes

associated with the PAS digital controls and the SB&PC digital controls. The expected DBEs analyzed in Subsections 15.2.4.2, 15.3.1, and 15.3.2 envelope the failure modes associated with the PAS digital controls and the FWCS digital controls.

Table 7.1-1 identifies the PAS and the associated codes and standards applied, in accordance with the SRP. This subsection addresses I&C systems conformance to regulatory requirements, guidelines, and industry standards.

7.7.4.3.1 Code of Federal Regulations

10 CFR 50.34(f)(2)(iii)[I.D.1], Human factors engineering principles applied to control room design:

- Conformance: The PAS design conforms to these requirements.

10 CFR 50.43(e), Innovative means of accomplishing safety functions:

- Conformance: When innovative means are used in the I&C design it complies with 10 CFR 50.43(e).

10 CFR 50.49, Environmental qualification of electric equipment important to safety for nuclear power plants:

- Conformance: The PAS conforms to these requirements. See Table 3.11-1 (Electrical and Mechanical Equipment for Environmental Qualification).

10 CFR 50.55a(a)(1), Quality standards for systems important to safety:

- Conformance: The PAS design conforms to this requirement for the use of the applicable standards.

10 CFR 52.47, Contents of applications; technical information, level of design information:

- Conformance: The level of detail provided for the PAS within the DCD conforms to this requirement.

10 CFR 52.47(a)(21), Resolution of unresolved and generic (medium- and high-priority) safety issues identified in NUREG-0933:

- Conformance: Resolution of unresolved and generic safety issues for I&C is discussed in Section 1.11.

10 CFR 52.47(a)(25), Interface requirements for portions of the plant not within scope of certified design application:

- Conformance: This 10 CFR is not applicable to PAS.

10 CFR 52.47(b)(1), ITAAC in design certification application:

- Conformance: This 10 CFR is not applicable to PAS.

10 CFR 52.47(c)(2), Innovative means to accomplish safety function design completeness requirements per 10 CFR 50.43(e):

- Conformance: The PAS design may use innovative means for accomplishing safety functions.

7.7.4.3.2 General Design Criteria

GDC 1, 2, 4,13, 19, and 24:

- Conformance: The PAS design complies with these GDC.

7.7.4.3.3 Regulatory Guides

RG 1.89, Environmental Qualification of Certain Electric Equipment Important to Safety for Nuclear Power Plants:

- Conformance: See Table 3.11-1 (Electrical and Mechanical Equipment for Environmental Qualification).

RG 1.97, Criteria for Accident Monitoring Instrumentation for Nuclear Power Plants:

- Conformance: The ESBWR I&C conforms to RG 1.97. Specific instruments credited for RG 1.97 compliance are determined as part of the HFE development process as discussed in Section 7.5.

RG 1.100, Seismic Qualification of Electric and Mechanical Equipment for Nuclear Power Plants:

- Conformance: See Sections 3.9 (Mechanical Systems and Components) and 3.10 (Seismic and Dynamic Qualification of Mechanical and Electrical Equipment).

RG 1.152, Criteria for Use of Computers in Safety Systems of Nuclear Power Plants:

- Conformance: The PAS design conforms to RG 1.152.

RG 1.168, Verification, Validation, Reviews, and Audits for Digital Computer Software Used in Safety Systems of Nuclear Power Plants:

- Conformance: The PAS design conforms to RG 1.168.

RG 1.169, Configuration Management Plans for Digital Computer Software Used in Safety Systems of Nuclear Power Plants:

- Conformance: The PAS design conforms to RG 1.169.

RG 1.170, Software Test Documentation for Digital Computer Software Used in Safety Systems of Nuclear Power Plants:

- Conformance: The PAS design conforms to RG 1.170.

RG 1.171, Software Unit Testing for Digital Computer Software Used in Safety Systems of Nuclear Power Plants:

- Conformance: The PAS design conforms to RG 1.171.

RG 1.172, Software Requirements Specifications for Digital Computer Software Used in Safety Systems of Nuclear Power Plants:

- Conformance: The PAS design conforms to RG 1.172.

RG 1.173, Developing Software Life Cycle Processes for Digital Computer Software Used in Safety Systems of Nuclear Power Plants:

- Conformance: The PAS design conforms to RG 1.173.

RG 1.180, Guidelines for Evaluating Electromagnetic and Radio-Frequency Interference in Safety-Related Instrumentation and Control Systems:

- Conformance: The PAS design conforms to RG 1.180. See Table 3.11-1 (Electrical and Mechanical Equipment for Environmental Qualification).

RG 1.209, Guidelines for Environmental Qualification of Safety-Related Computer-Based Instrumentation and Control Systems in Nuclear Power Plants:

- Conformance: See Table 3.11-1 (Electrical and Mechanical Equipment for Environmental Qualification).

7.7.4.3.4 Branch Technical Positions

BTP HICB-10, Guidance on Application of Regulatory Guide 1.97:

- Conformance: The ESBWR I&C conforms to RG 1.97. Specific instruments credited for RG 1.97 compliance are determined as part of the HFE development process as discussed in Section 7.5.

BTP HICB-16, Guidance on the Level of Detail Required for Design Certification Applications Under 10 CFR Part 52:

- Conformance: The level of detail provided for the PAS conforms to BTP HICB-16.

7.7.4.4 Testing and Inspection Requirements

The FTDC input and output communication interfaces function continuously during normal power operation. Abnormal functioning of these components can be detected during operation. In addition, the FTDC is equipped with self-test and on-line diagnostic capabilities for identifying and isolating failures of input/output signals, buses, power supplies, processors, and inter-processor data communications. These on-line tests and diagnostics can be performed without interrupting the normal control operation of the PAS.

7.7.4.5 Instrumentation and Control Requirements

The instrumentation required for the system can be categorized as (1) MCR instrumentation, needed for the man-machine interface, (2) hardware and software instrumentation for input/output interfaces and controller functions, and (3) direct non multiplexed sensor inputs needed by the system. The PAS hardware comprises triple redundant master controllers and duplicate system controllers. PAS software is required for controller functions and input/output interfaces.

7.7.5 Steam Bypass and Pressure Control System

7.7.5.1 System Design Bases

7.7.5.1.1 Safety Design Bases

The SB&PC System does not perform or ensure any safety-related function, is classified as a nonsafety-related system, and has no safety-related design basis. In the Power Operation Mode, only one of the three triple redundant FTDCs can be removed from service.

7.7.5.1.2 Power Generation (Non-safety) Design Bases

The SB&PC System is designed so that the functional capabilities of safety-related systems are not inhibited. The SB&PC System is required for the power generation cycle because it controls reactor pressure during plant startup, power generation, and shutdown modes of operation.

The design objective is to enable a fast and stable response to system pressure disturbances, and to pressure setpoint changes over the operating range. This is done using Turbine Control Valves (TCVs) through the TGCS and Turbine Bypass Valves (TBVs) for controlling reactor pressure. In addition, the design objective of the SB&PC System is to discharge reactor steam directly to the main condenser in order to regulate reactor pressure whenever the turbine cannot use all of the steam generated by the reactor.

7.7.5.2 System Description

7.7.5.2.1 General Description

The purpose of the SB&PC System is to control reactor pressure during plant startup, power generation, and shutdown modes of operation. The SB&PC System is implemented on triple redundant FTDCs. Power supplies and input/output signals are redundant. The controller is designed for a MTTF of no less than 1000 years. Control of reactor pressure is accomplished through control of the TCVs through the TGCS and TBVs, so that susceptibility to reactor trip, turbine-generator trip, main steam isolation, and safety relief valve opening is minimized. Triple redundant FTDCs using feedback signals from RPV dome pressure sensors generate command signals for the TBVs and pressure regulation demand signals used by the TGCS to generate demand signals for the TCVs. For normal operation, the TCVs regulate reactor pressure. However, whenever the total steam flow demand from the SB&PC System exceeds the effective TCV steam flow demand, the SB&PC System sends the excess steam flow directly to the main condenser through the TBVs.

The ability of the plant to load follow the grid system demands is accomplished by the aid of control rod actions. In response to the resulting steam production demand changes, the SB&PC System adjusts the demand signals sent to the TGCS so that the TGCS adjusts the TCVs to accept the control steam output change, thereby controlling pressure.

Controls and valves are designed so that steam flow is shut off when control system electrical power or hydraulic system pressure is lost.

Refer to Figure 7.7-5, SB&PC System Simplified Functional Block Diagram, and Figure 7.7-6, SB&PC System FTDC Block Diagram for an overview of SB&PC System functions and interfaces. Additional information is provided in Table 7.7-1, "Major Plant Automation System Interfaces."

7.7.5.2.2 Normal Plant Operation

At steady-state plant operation, the SB&PC System maintains RPV pressure at a set value, to ensure optimum plant performance. During normal operational plant maneuvers (e.g., pressure setpoint changes, level setpoint changes), the SB&PC System provides responsive, stable performance to minimize RPV water level and neutron flux transients. During plant startup and heatup, the SB&PC System provides for automatic control of the reactor pressure. Independent control of reactor pressure and power is permitted during RPV heatup by varying the turbine bypass flow as the main turbine is brought up to speed and synchronized. The SB&PC System also controls RPV pressure during normal (MSIVs open) reactor shutdown to control the reactor cooling rate.

7.7.5.2.3 Abnormal Plant Operation

Events that lead to reactor trip present significant transients while the SB&PC System maintains reactor pressure. These transients are characterized by large variations in steam flow and core thermal power output that affect RPV water level. The SB&PC System stabilizes system pressure and thus aids the FWCS in maintaining RPV water level.

The SB&PC System is also designed to operate with other reactor control systems to avoid reactor trip after significant plant disturbances. Examples of such disturbances are loss of one FW pump, inadvertent opening of safety relief valves (SRVs)or TBVs, main turbine stop/control valve surveillance testing, and MSIV testing. To protect the condenser the SB&PC System inhibits opening of the TBVs when it detects high condenser pressure.

7.7.5.2.4 Operational Considerations

Manual operations permit opening of the main steam lines (up to the turbine bypass valves [TBVs] and turbine stop valves [TSVs]) before normal condenser vacuum is obtained and permit cold shutdown testing of the isolation valves. The SB&PC System allows remote manual bypass operation in the normal opening sequence during plant start up and shut down. This facilitates purge of the RPV and main steam lines of accumulated noncondensible gases early on in the start-up process, and controls the rate of cooling during reactor shutdown to atmospheric pressures. When pressure transients increase during such manual operation, the controls provide automatic override of the manual demand signal by the normal bypass demand. The system automatically returns to the manual demand signal when the pressure transient causing the increased bypass demand is relieved.

Triple redundant FTDCs perform the SB&PC System functional logic and process control functions. Because of the triple redundancy, it is possible to lose one complete processing channel without affecting the system function. This also facilitates taking one channel out of service for maintenance, repair, or module replacement while the system is on-line.

During operation of the SB&PC System, the operator may observe the performance of the plant through nonsafety-related VDUs on the main control console or on the wide display panel (WDP) in the MCR. As described in Subsection 7.7.5.4 below, the on-line diagnostic provision assures that all detections of transducer/controller failures are indicated to the operator and maintenance personnel. The triple redundant logic facilitates on line repair of the controller circuit boards. During abnormal conditions that result in high condenser pressure, the steam bypass valves and MSIVs close to prevent positive pressure conditions that would open the main condenser rupture disks. Manually operated provisions permit opening of the MSIVs (that is, inhibit the closure function) during startup operation. This vacuum protection function bypass permits heatup of the main steam lines, up to the steam bypass valves and TSVs, before normal main condenser vacuum is obtained. The bypass also permits cold shutdown testing of the isolation valves. Any plant or component condition that inhibits bypass valve opening is indicated in the MCR and must be resolved before the TBV inhibit memory can be manually reset by the operator.

The SB&PC System has no safety setpoints because it is not a safety-related system. Actual operational setpoints are determined during startup testing.

The SB&PC System and bypass valves are powered by redundant uninterruptible nonsafety-related power supplies and sources. No single power failure results in the loss of any SB&PC System function. Upon detection of a failure of two or more channels in the controller, a turbine trip is initiated.

The pressure control function forces the TCVs to remain under pressure control supervision to provide automatic load following. This enables fast bypass opening for transient events that require fast reduction in turbine steam flow.

The steam bypass function controls reactor pressure by responding to the bypass flow demand signal. It modulates the bypass valves, which are automatically operated. This control mode is assumed under the following conditions:

- During RPV heatup to rated pressure,
- While the turbine is brought up to speed and synchronized,
- During power operation when the reactor steam generation rate exceeds the turbine steam flow rate requirements,
- During plant load rejection and turbine/generator trips, and
- During cooldown of the nuclear reactor.

7.7.5.3 Safety Evaluation

The SB&PC System is classified as a primary power generation system. It is not safety-related, and is not required to operate during or after any DBAs. The system is required to operate in the normal plant environment and is required for the power production cycle. The SB&PC System equipment is located in both the MCR area of the CB and the Turbine Building (TB); and each SB&PC System component is subject to the environment of the applicable area. The SB&PC System FTDC panel and its components are designed to retain structural integrity during and after DBEs so that safety-related equipment in its area are able to perform their safety functions.

Chapter 15 examines the various failure mode considerations for this system. The expected DBEs analyzed in Subsections 15.2.5.1, 15.3.3, and 15.3.4, 15.3.5, and 15.3.6 envelope the failure modes associated with the SB&PC digital controls.

Table 7.1-1 identifies the nonsafety-related SB&PC System and the associated codes and standards applied, in accordance with the SRP. This subsection addresses I&C systems conformance to regulatory requirements, guidelines, and industry standards.

7.7.5.3.1 Code of Federal Regulations

10 CFR 50.34(f)(2)(iii)[I.D.1], Human factors engineering principles applied to control room design:

- Conformance: The SB&PC design conforms to these requirements.

10 CFR 50.43(e), Innovative means of accomplishing safety functions:

- Conformance: When innovative means are used in the I&C design it complies with 10 CFR 50.43(e).

10 CFR 50.49, Environmental qualification of electric equipment important to safety for nuclear power plants:

- Conformance: See Table 3.11-1 (Electrical and Mechanical Equipment for Environmental Qualification).

10 CFR 50.55a(a)(1), Quality standards for systems important to safety:

- Conformance: The SB&PC design conforms to this requirement for the use of the applicable standards.

10 CFR 52.47, Contents of applications; technical information, level of design information:

- Conformance: The level of detail provided for the SB&PC within the DCD conforms to this requirement.

10 CFR 52.47(a)(21), Resolution of unresolved and generic (medium- and high-priority) safety issues identified in NUREG-0933:

- Conformance: There are no unresolved issues for the SB&PC System. Resolution of unresolved and generic safety issues is discussed in Section 1.11.

10 CFR 52.47(a)(25), Interface requirements for portions of the plant not within scope of certified design application:

- Conformance: There are no interface requirements for this section.

10 CFR 52.47(b)(1), ITAAC in design certification application:

- Conformance: Inspection, test, analyses, and acceptance criteria of the SB&PC System FTDC are identified in Tier 1.

10 CFR 52.47(c)(2), Innovative means to accomplish safety function design completeness requirements per 10 CFR 50.43(e):

- Conformance: The SB&PC design may use innovative means for accomplishing safety functions.

7.7.5.3.2 General Design Criteria

GDC 1, 2, 4, 13, 19, and 24:

- Conformance: The SB&PC System design conforms to these GDC.

7.7.5.3.3 Regulatory Guides

RG 1.89, Environmental Qualification of Certain Electric Equipment Important to Safety for Nuclear Power Plants:

- Conformance: See Table 3.11-1 (Electrical and Mechanical Equipment for Environmental Qualification).

RG 1.97, Criteria for Accident Monitoring Instrumentation for Nuclear Power Plants:

- Conformance: The ESBWR I&C conforms to RG 1.97. Specific instruments credited for RG 1.97 compliance are determined as part of the HFE development process as discussed in Section 7.5.

RG 1.100, Seismic Qualification of Electric and Mechanical Equipment for Nuclear Power Plants:

- Conformance: See Sections 3.9 (Mechanical Systems and Components) and 3.10 (Seismic and Dynamic Qualification of Mechanical and Electrical Equipment).

RG 1.151, Instrument Sensing Lines:

- Conformance: RG 1.151 is not applicable to the SB&PC System. The SB&PC System receives RPV dome pressure signals from sensors in the NBS (refer to Subsection 7.7.1.3). The SB&PC System also receives condenser absolute pressure signals from sensors in the Main Condenser and Auxiliaries System.

RG 1.152, Criteria for Use of Computers in Safety Systems of Nuclear Power Plants:

- Conformance: The SB&PC design conforms to RG 1.152.

RG 1.168, Verification, Validation, Reviews, and Audits for Digital Computer Software Used in Safety Systems of Nuclear Power Plants:

- Conformance: The SB&PC design conforms to RG 1.168.

RG 1.169, Configuration Management Plans for Digital Computer Software Used in Safety Systems of Nuclear Power Plants:

- Conformance: The SB&PC design conforms to RG 1.169.

RG 1.170, Software Test Documentation for Digital Computer Software Used in Safety Systems of Nuclear Power Plants:

- Conformance: The SB&PC design conforms to RG 1.170.

RG 1.171, Software Unit Testing for Digital Computer Software Used in Safety Systems of Nuclear Power Plants:

- Conformance: The SB&PC design conforms to RG 1.171.

RG 1.172, Software Requirements Specifications for Digital Computer Software Used in Safety Systems of Nuclear Power Plants:

- Conformance: The SB&PC design conforms to RG 1.172.

RG 1.173, Developing Software Life Cycle Processes for Digital Computer Software Used in Safety Systems of Nuclear Power Plants:

- Conformance: The SB&PC design conforms to RG 1.173.

RG 1.180, Guidelines for Evaluating Electromagnetic and Radio-Frequency Interface in Safety-Related Instrumentation and Control Systems:

- Conformance: See Table 3.11-1 (Electrical and Mechanical Equipment for Environmental Qualification).

RG 1.209, Guidelines for Environmental Qualification of Safety-Related Computer-Based Instrumentation and Control Systems in Nuclear Power Plants:

- Conformance: See Table 3.11-1 (Electrical and Mechanical Equipment for Environmental Qualification).

7.7.5.3.4 **Branch Technical Positions**

BTP HICB-10, Guidance on Application of Regulatory Guide 1.97:

- Conformance: The ESBWR I&C conforms to RG 1.97. Specific instruments credited for RG 1.97 compliance are determined as part of the HFE development process as discussed in Section 7.5.

BTP HICB-16, Guidance on the Level of Detail Required for Design Certification Applications Under 10 CFR Part 52:

- Conformance: The level of detail provided in this subsection conforms to BTP HICB-16.

7.7.5.4 Testing and Inspection Requirements

The FTDC input and output communication interfaces function continuously during normal power operation. Abnormal operation of these components is detected during operation. The FTDC is equipped with on-line diagnostic capabilities to identify and isolate failure of I/O signals, buses, power supplies, processors, and inter-processor data communications. On-line diagnostics are performed without interrupting the normal control operation of the SB&PC System.

The SB&PC System components and critical components of interfacing systems are tested to ensure the specified performance requirements are satisfied. Preoperational testing of the SB&PC System is performed before fuel loading and startup testing to ensure the system functions as designed and stated system performance is within specified criteria.

7.7.5.5 Instrumentation and Control Requirements

7.7.5.5.1 Power Sources

7.7.5.5.1.1 Uninterruptible Nonsafety-Related AC Power Supply

The nonsafety-related inverters of the UPS are powered by rectifiers that are supplied with AC power. However, if the AC power fails, the inverters receive power from a Direct Current (DC) source (batteries). The SB&PC System has three redundant nonsafety-related AC UPS of 120±10% VAC, 60 Hz. The SB&PC System panel is designed so that loss of one UPS or incoming power source does not affect SB&PC System functional operation and thus plant operation.

7.7.5.6 Major Instrument Interfaces with SB&PC System

7.7.5.6.1 Nuclear Boiler System

The NBS provides narrow range dome pressure, wide range dome pressure, inboard MSIV position, and outboard MSIV position signals to the SB&PC System.

7.7.5.6.2 Plant Automation System - Automatic Power Regulator

The SB&PC System supplies signals to the PAS-Automatic Power Regulator (APR). These signals are:

- SB&PC System Auto/OK status
- Operating pressure setpoint
- Total (average) TBV position
- Pressure regulator output

- Limited speed regulator output
- Load reference
- First TBV position

The PAS-APR transmits signals to the SB&PC System. These signals are:

- Automatic frequency control (AFC) status
- Raise pressure setpoint
- Lower pressure setpoint
- PAS-APR fatal fault
- Reactor thermal power

7.7.5.6.3 N-DCIS - Plant Computer Functions

The performance monitoring and control (PMC) function of the Plant Computer Functions (PCF) within the N-DCIS receives signals from the SB&PC System for performance monitoring.

7.7.5.6.4 Nonsafety-Related Distributed Control and Information System - Multiplexing

The multiplexing function of the N-DCIS provides the distributed control and instrumentation data communications network that supports the monitoring and control of interfacing plant systems. RMUs that support the SB&PC System and its interfaces with other systems are located throughout the plant.

7.7.5.6.5 Main Control Room Panels

The MCRP operator interface within the N-DCIS contains controls needed for SB&PC operation and displays variables and alarms from the SB&PC System.

7.7.5.6.6 Main Control Room Back Panels

The SB&PC System's triple redundant FTDC panel is mounted in a MCR Back Panel (MCRBP).

7.7.5.6.7 Turbine Bypass System

The Turbine Bypass System (TBS) provides temperature signals to the SB&PC System from thermocouples installed in each TBV discharge pipe, located between the TBV and condenser, for bypass steam leakage detection.

7.7.5.6.8 Turbine Generator Control System

The TGCS is a redundant process control system. Only the operator can switch the turbine generator controller to Automatic (remote), but either the operator or the APR can switch the turbine generator controller to Manual (local). The TGCS controls the turbine speed, load, and steam flow for startup and normal operations. The TGCS operates the TSVs, TCVs, and the intermediate stop and intercept valves. The TGCS also provides automation functions such as sequencing the

appropriate turbine support systems and controlling turbine roll, synchronization of the main generator, and initial loading. The SB&PC System sends a steam flow demand to the Turbine Generator (TG) controller.

The SB&PC System sends signals to the TGCS. These signals are:

- Pressure regulation demand
- Turbine trip

The TGCS provides signals to the SB&PC System. These signals are:

- Turbine speed regulator output
- Load reference
- Turbine steam flow demand
- Turbine first stage pressure
- Power-Load Unbalance (PLU) event
- TGCS Central Processing Unit (CPU) failure
- Turbine trip

7.7.5.6.9 **Main Condenser and Auxiliaries**

The main condenser receives steam from the TBVs and provides condenser narrow and wide range pressure signals, from all shells of the condenser, to the SB&PC System.

7.7.5.6.10 **Auxiliary Boiler**

The SB&PC System has the capability to start the auxiliary boiler and to command the auxiliary boiler to adjust steam production rate upon a MSIV closure condition as required.

7.7.6 **Neutron Monitoring System - Nonsafety-Related Subsystems**

7.7.6.1 **System Design Bases**

7.7.6.1.1 **Safety-Related Design Bases**

The NMS has two nonsafety-related subsystems, the Automatic Fixed In Core Probe (AFIP) subsystem and the MRBM subsystem. Neither the AFIP subsystem nor the MRBM subsystem performs or ensures any safety-related function; therefore the AFIP and MBRM subsystems have no safety-related design basis.

7.7.6.1.2 **Power Generation (Non-Safety) Design Bases**

The AFIP power generation design bases are:

- To provide a signal proportional to the axial neutron flux distribution at the radial core locations of the LPRM detectors. This signal allows calibration of the LPRM.

- To provide sufficient axial neutron flux monitoring with corresponding axial position and indication to allow point-wise measurement of the axial neutron flux distribution to support the determination of three-dimension core power distribution.
- To receive LPRM information by direct interface with the N-DCIS PCF.

The MRBM power generation design bases are:

- To provide a signal to the RC&IS to block rod movement and prevent fuel damage if the MRBM signal exceeds a preset RBS to prevent fuel damage.
- To provide MRBM values to the N-DCIS.
- To provide bypass capability of one-out-of-two MRBM channels.
- To provide bypass of individual LPRM channels in its calculations.
- To provide on-line test and diagnostic capability to validate proper operation of its micro-processor based system.
- To provide rod block status to the MCR alarm system.

7.7.6.2 System Description

7.7.6.2.1 Automated Fixed In-Core Probe

7.7.6.2.1.1 General Description

The AFIP subsystem comprises AFIP sensors and their associated cables, as well as the signal processing electronic unit. The AFIP sensors are installed permanently within the LPRM assemblies. In each LPRM assembly in the core, there are seven AFIP sensors evenly distributed axially along the LPRM assembly. Consequently, there are AFIP sensors at and between all LPRM locations. The AFIP sensor cables are routed within the LPRM assembly and then out of the RPV through the LPRM assembly penetration of the vessel. The AFIP subsystem generates signals proportional to the axial power distribution at the radial core locations of the LPRM detector assemblies. The AFIP signal range is sufficiently wide to accommodate the corresponding local power range of approximately 5% to 125% of reactor rated power.

During core power and LPRM calibration, the AFIP signals are automatically collected and sent to the AFIP data processing and control unit. The data are properly amplified and compensated by applying correct sensor calibration adjustment factors. The data are sent to the PCF of the N-DCIS for core local power and thermal limits calculations. The calculated local power data are then used for LPRM calibration. The AFIP data collection and processing sequences are automated, with manual control available.

The AFIP sensor has near constant, very stable detector sensitivity due to its operating principle. Its sensitivity does not depend upon fissile material depletion or radiation exposure. The AFIP sensor, however, can be calibrated manually or automatically by using a built-in calibration device inside the

LPRM assembly. The calibrated new sensitivity data of the AFIP sensors are stored in the AFIP control unit and are applied to the newly collected AFIP data to provide accurate local power information.

The AFIP sensors in an LPRM assembly are replaced together with the LPRM detectors when the whole LPRM assembly is replaced. The AFIP detectors within the LPRM assembly are installed so that physical separation is maintained between the LPRM detectors and the AFIP detectors. The AFIP cables are also routed within the LPRM assembly separately from the LPRM detector cables, with separate external connectors.

7.7.6.2.1.2 Classification

The AFIP subsystem is nonsafety-related. It is an operational subsystem with no safety-related function.

7.7.6.2.1.3 Power Supply

The power for the AFIP is supplied from the nonsafety-related instrument 120VAC Instrumentation and Control Power Supply power source. The power for the AFIP logic is supplied from redundant nonsafety-related instrument 120VAC UPS.

7.7.6.2.1.4 Environmental Considerations

The AFIP sensor meets ESBWR environmental requirements. The connectors and cabling located in the drywell are designed for continuous duty (see Table 3.11-1). The AFIP instruments are designed to operate as intended under the expected environmental conditions at their locations.

7.7.6.2.1.5 Operational Considerations

The AFIP is operated to provide local power information for three-dimensional power calculations and for calibration of the LPRM channels. The AFIP operation is automated including AFIP data collection, AFIP sensor calibration, AFIP data amplification, and data transfer to the PCF. Manual operation capability is available.

7.7.6.2.2 Multi-Channel Rod Block Monitor

7.7.6.2.2.1 General Description

The MRBM subsystem logic issues a rod block signal used in the RC&IS logic to enforce rod blocks. Because it monitors more than one region, it is called the multi-channel rod block monitor. The rod blocks prevent fuel damage by ensuring that the MCPR does not violate fuel thermal limits or exceed MLHGR limitations. Once a rod block is initiated, manual action is required by the operator to reset the system.

The MRBM microcomputer-based logic receives input signals from the LPRMs and the APRMs of the NMS. It also receives control rod status data from the RAPI subsystem of the RC&IS to determine when rod withdrawal blocks are required. The MRBM uses the LPRM signals to detect

local power change during the rod withdrawal. If the MRBM signal, which is based on averaged LPRM signal, exceeds a preset RBS, a control rod block demand is issued. The MRBM monitors the core in four-by-four fuel bundle regions where control rods are being withdrawn. The MRBM algorithm covers the monitoring of multiple regions simultaneously depending upon the size of the gang of rods being withdrawn. The MRBM is a dual channel system, but it is not a safety-related system.

7.7.6.2.2.2 Classification

The MRBM is nonsafety-related. Its activating interface is through the RC&IS, which is also a nonsafety-related system.

7.7.6.2.2.3 Power Supply

The power supply for the MRBM is from the non-divisional, nonsafety-related 120 VAC UPS buses in two different load groups.

7.7.6.2.2.4 Environmental Considerations

The MRBM is located in the MCR. It is physically and electrically isolated from the safety-related NMS subsystems. All interfaces with the safety-related NMS subsystems are through fiber-optic isolators.

7.7.6.3 Safety Evaluation

Table 7.1-1 identifies the nonsafety-related control systems and the associated codes and standards applied, in accordance with the SRP. This subsection addresses I&C systems conformance to regulatory requirements, guidelines, and industry standards.

7.7.6.3.1 Code of Federal Regulations

10 CFR 50.34(f)(2)(iii)[I.D.1], Human factors engineering principles applied to control room design:

- Conformance: The AFIP and MRBM designs conforms to these requirements.

10 CFR 50.43(e), Innovative means of accomplishing safety functions:

- Conformance: When innovative means are used in the I&C design it complies with 10 CFR 50.43(e).

10 CFR 50.49, Environmental qualification of electric equipment important to safety for nuclear power plants:

- Conformance: See Table 3.11-1 (Electrical and Mechanical Equipment for Environmental Qualification).

10 CFR 50.55a(a)(1), Quality standards for systems important to safety:

- Conformance: The AFIP and MRBM subsystem designs conform to this requirement for the use of the applicable standards.

10 CFR 52.47, Contents of applications; technical information, level of design information:

- Conformance: The level of detail provided for the AFIP and MRBM within the DCD conforms to this requirement.

10 CFR 52.47(a)(21), Resolution of unresolved and generic (medium- and high-priority) safety issues identified in NUREG-0933:

- Conformance: Resolution of unresolved and generic safety issues is discussed in Section 1.11.

10 CFR 52.47(a)(25), Interface requirements for portions of the plant not within scope of certified design application:

- Conformance: There are no interface requirements for this section.

10 CFR 52.47(b)(1), ITAAC in design certification application:

- Conformance: ITAAC are provided for the I&C systems and equipment in Tier 1.

10 CFR 52.47(c)(2), Innovative means to accomplish safety function design completeness requirements per 10 CFR 50.43(e):

- Conformance: The AFIP and MRBM designs may use innovative means for accomplishing safety functions.

7.7.6.3.2 General Design Criteria

GDC 1, 2, 4, 12, 13, 19, 24, 25, 26, 27, 28 and 29:

- Conformance: The AFIP and MRBM subsystem designs comply with these GDC.

7.7.6.3.3 Regulatory Guides

RG 1.89, Environmental Qualification of Certain Electric Equipment Important to Safety for Nuclear Power Plants:

- Conformance: See Table 3.11-1 (Electrical and Mechanical Equipment for Environmental Qualification).

RG 1.97, Criteria for Accident Monitoring Instrumentation for Nuclear Power Plants:

- Conformance: The ESBWR I&C conforms to RG 1.97. Specific instruments credited for RG 1.97 compliance are determined as part of the HFE development process as discussed in Section 7.5.

RG 1.100, Seismic Qualification of Electric and Mechanical Equipment for Nuclear Power Plants:

- Conformance: See Sections 3.9 (Mechanical Systems and Components) and 3.10 (Seismic and Dynamic Qualification of Mechanical and Electrical Equipment).

RG 1.152, Criteria for Use of Computers in Safety Systems of Nuclear Power Plants:

- Conformance: The AFIP and MRBM subsystem designs conform to RG 1.152.

RG 1.168, Verification, Validation, Reviews, and Audits for Digital Computer Software Used in Safety Systems of Nuclear Power Plants:

- Conformance: The AFIP and MRBM designs conform to RG 1.168.

RG 1.169, Configuration Management Plans for Digital Computer Software Used in Safety Systems of Nuclear Power Plants:

- Conformance: The AFIP and MRBM designs conform to RG 1.169.

RG 1.170, Software Test Documentation for Digital Computer Software Used in Safety Systems of Nuclear Power Plants:

- Conformance: The AFIP and MRBM designs conform to RG 1.170.

RG 1.171, Software Unit Testing for Digital Computer Software Used in Safety Systems of Nuclear Power Plants:

- Conformance: The AFIP and MRBM designs conform to RG 1.171.

RG 1.172, Software Requirements Specifications for Digital Computer Software Used in Safety Systems of Nuclear Power Plants:

- Conformance: The AFIP and MRBM designs conform to RG 1.172.

RG 1.173, Developing Software Life Cycle Processes for Digital Computer Software Used in Safety Systems of Nuclear Power Plants:

- Conformance: The AFIP and MRBM designs conform to RG 1.173.

RG 1.180, Guidelines for Evaluating Electromagnetic and Radio-Frequency Interference in Safety-Related Instrumentation and Control Systems:

- Conformance: The AFIP and MRBM subsystem designs conform to RG 1.180. See Table 3.11-1 (Electrical and Mechanical Equipment for Environmental Qualification).

RG 1.209, Guidelines for Environmental Qualification of Safety-Related Computer-Based Instrumentation and Control Systems in Nuclear Power Plants:

- Conformance: See Table 3.11-1 (Electrical and Mechanical Equipment for Environmental Qualification).

7.7.6.3.4 Branch Technical Positions

BTP HICB-10, Guidance on Application of Regulatory Guide 1.97:

- Conformance: The ESBWR I&C conforms to RG 1.97. Specific instruments credited for RG 1.97 compliance are determined as part of the HFE development process as discussed in Section 7.5.

BTP HICB-16, Guidance on the Level of Detail Required for Design Certification Applications Under 10 CFR Part 52:

- Conformance: The level of detail provided in this subsection conforms to BTP HICB-16.

7.7.6.4 Testing and Inspection Requirements

7.7.6.4.1 Automated Fixed In-Core Probe

The AFIP instruments (not including sensors) are designed such that they can be tested, inspected, and calibrated as required during plant operation without causing plant shutdown or scram, and with access for the service personnel.

The AFIP sensor is testable and can be calibrated for its sensitivity. The AFIP instrument unit includes an algorithm that automatically detects and rejects failed AFIP sensor signals. It also includes logic that verifies proper communication with the N-DCIS PCF.

The duration for AFIP testing and calibration is based on the applicable NMS AFIP design document. Additional information is provided in, "Gamma Thermometer System for LPRM Calibration and Power Shape Monitoring," NEDE-33197P (Reference 7.7-1).

7.7.6.4.2 Multi-Channel Rod Block Monitor

The MRBM subsystem is designed so that it can be tested, inspected, and calibrated as required during plant operation without causing plant shutdown or reactor scram. It provides access for the service personnel. The MRBM subsystem includes logic that verifies proper communication with the N-DCIS. The duration for MRBM testing and calibration is based on the applicable NMS MRBM design document and the instruction manual for the MRBM subsystem.

7.7.6.5 Instrumentation and Control Requirements

7.7.6.5.1 Automated Fixed In-Core Probe

The AFIP instrument is based on digital measurement and control design practices that include micro-processor based programmable memory units. It follows a modular design concept so that each unit or its subunit is replaceable during repair service. The instrument has a flexible interface design that accommodates either metal wire or fiber-optic communication links. The AFIP instrument is provided with necessary operator interface functions meeting NMS man-machine interface requirements.

The AFIP includes basic logic such as periodic demand for sensor calibration and data collection, as well as logic that is part of the communication protocol with the PCF. The AFIP instrument cabinets are located in areas of the CB having acceptable environmental conditions and physical and electrical separation from the safety-related NMS instruments.

7.7.6.5.2 Multi-Channel Rod Block Monitor

The MRBM subsystem is based on digital measurement and control design practices that include micro-processor based programmable and memory units. The MRBM follows a modular design concept so that each unit or its subunit is replaceable during repair service. The MRBM has a flexible interface design to accommodate either metal wire or fiber-optic communication links. The MRBM instrument is provided with necessary operator interface functions meeting NMS man-machine interface requirements.

The MRBM includes basic logic such as continuous LPRM data collection, MRBM rod block algorithm calculation, MRBM setpoint comparison, and communication protocol with the N-DCIS. The MRBM subsystem is located within the nonsafety-related equipment rooms of the CB having acceptable environmental conditions and physical and electrical separation from the safety-related NMS instruments.

7.7.7 Containment Inerting System

7.7.7.1 System Design Bases

The CIS design bases are discussed in Subsection 6.2.5.2.1.

7.7.7.2 System Description

The CIS system description is discussed in Subsection 6.2.5.2.2.

7.7.7.3 Safety Evaluation

The CIS safety evaluation is discussed in Subsection 6.2.5.2.3.

Table 7.1-1 identifies the CIS and the associated codes and standards applied, in accordance with the SRP. This subsection addresses I&C systems conformance to regulatory requirements, guidelines, and industry standards.

7.7.7.3.1 Code of Federal Regulations

10 CFR 50.34(f)(2)(iii)[I.D.1], Human factors engineering principles applied to control room design:

- Conformance: The CIS design conforms to these requirements.

10 CFR 50.34(f)(2)(xv)[II.E.4.4], Containment purge/venting system response time and isolation requirements under accident conditions:

- Conformance: The CIS conforms to these requirements.

10 CFR 50.43(e), Innovative means of accomplishing safety functions:

- Conformance: When innovative means are used in the I&C design it complies with 10 CFR 50.43(e).

10 CFR 50.49, Environmental qualification of electric equipment important to safety for nuclear power plants:

- Conformance: The CIS conforms to these standards. See Table 3.11-1 (Electrical and Mechanical Equipment for Environmental Qualification).

10 CFR 50.55a(a)(1), Quality standards for ystems important to safety:

- Conformance: The CIS design conforms to this requirement for the use of the applicable standards.

10 CFR 52.47, Contents of applications; technical information, level of design information:

- Conformance: The level of detail provided for the CIS within the DCD conforms to this requirement.

10 CFR 52.47(a)(21), Resolution of unresolved and generic (medium- and high-priority) safety issues identified in NUREG-0933:

- Conformance: Resolution of unresolved and generic safety issues is discussed in Section 1.11.

10 CFR 52.47(a)(25), Interface requirements for portions of the plant not within scope of certified design application:

- Conformance: There are no interface requirements for this section.

10 CFR 52.47(b)(1), ITAAC in design certification application:

- Conformance: ITAAC are provided for I&C systems and equipment in Tier 1.

10 CFR 52.47(c)(2), Innovative means to accomplish safety function design completeness requirements per 10 CFR 50.43(e):

- Conformance: The CIS design may use innovative means for accomplishing safety functions.

7.7.7.3.2 General Design Criteria

GDC 1, 2, 4, 13, 19, 24, 41, 42, and 43:

- Conformance: The CIS design conforms to these GDC. I&C are provided to operate the system and monitor process variables during startup, normal, and abnormal reactor operation. The CIS is operable from the MCR.

7.7.7.3.3 Regulatory Guides

RG 1.89, Environmental Qualification of Certain Electric Equipment Important to Safety for Nuclear Power Plants:

- Conformance: See Table 3.11-1 (Electrical and Mechanical Equipment for Environmental Qualification).

RG 1.97, Criteria for Accident Monitoring Instrumentation for Nuclear Power Plants:

- Conformance: The ESBWR I&C conforms to RG 1.97. Specific instruments credited for RG 1.97 compliance are determined as part of the HFE development process as discussed in Section 7.5.

RG 1.100, Seismic Qualification of Electric and Mechanical Equipment for Nuclear Power Plants:

- Conformance: See Sections 3.9 (Mechanical Systems and Components) and 3.10 (Seismic and Dynamic Qualification of Mechanical and Electrical Equipment).

RG 1.151, Instrument Sensing Lines:

- Conformance: The CIS instrument lines penetrating containment comply with the guidance of RG 1.151. Sensing lines are Seismic Category I Quality Group B and are provided with redundant isolation valves that can be isolated locally or remote manually from the MCR.

RG 1.152, Criteria for Use of Computers in Safety Systems of Nuclear Power Plants:

- Conformance: The CIS design conforms to RG 1.152.

RG 1.168, Verification, Validation, Reviews, and Audits for Digital Computer Software Used in Safety Systems of Nuclear Power Plants:

- Conformance: The CIS design conforms to RG 1.168.

RG 1.169, Configuration Management Plans for Digital Computer Software Used in Safety Systems of Nuclear Power Plants:

- Conformance: The CIS design conforms to RG 1.169.

RG 1.170, Software Test Documentation for Digital Computer Software Used in Safety Systems of Nuclear Power Plants:

- Conformance: The CIS design conforms to RG 1.170.

RG 1.171, Software Unit Testing for Digital Computer Software Used in Safety Systems of Nuclear Power Plants:

- Conformance: The CIS design conforms to RG 1.171.

RG 1.172, Software Requirements Specifications for Digital Computer Software Used in Safety Systems of Nuclear Power Plants:

- Conformance: The CIS design conforms to RG 1.172.

RG 1.173, Developing Software Life Cycle Processes for Digital Computer Software Used in Safety Systems of Nuclear Power Plants:

- Conformance: The CIS design conforms to RG 1.173.

RG 1.180, Guidelines for Evaluating Electromagnetic and Radio-Frequency Interference in Safety-Related Instrumentation and Control Systems:

- Conformance: The CIS system design conforms to RG 1.180. See Table 3.11-1 (Electrical and Mechanical Equipment for Environmental Qualification).

RG 1.209, Guidelines for Environmental Qualification of Safety-Related Computer-Based Instrumentation and Control Systems in Nuclear Power Plants:

- Conformance: See Table 3.11-1 (Electrical and Mechanical Equipment for Environmental Qualification).

7.7.7.3.4 Branch Technical Positions

BTP HICB-10, Guidance on Application of Regulatory Guide 1.97:

- Conformance: The ESBWR I&C conforms to RG 1.97. Specific instruments credited for RG 1.97 compliance are determined as part of the HFE development process as discussed in Chapter 18.

BTP HICB-16, Guidance on the Level of Detail Required for Design Certification Applications Under 10 CFR Part 52, is applicable to the nonsafety-related CIS. The level of detail provided in this subsection conforms to BTP HICB-16.

7.7.7.4 Testing and Inspection Requirements

The CIS testing and inspection requirements are discussed in Subsection 6.2.5.2.

7.7.7.5 Instrumentation and Control Requirements

7.7.7.5.1 Logic and Interlocks

The CIS operation is manually or automatically activated from the MCR by aligning corresponding valves through remote manual control switches. During the inerting mode, a temperature controller accomplishes automatic control of the steam supply once the steam-heated nitrogen vaporizer has been activated. A temperature sensor at the outlet of the steam-heated vaporizer provides input to the temperature controller that regulates the amount of steam. Low nitrogen temperature in the steam vaporizer outlet causes an alarm and a low-low temperature condition shuts off the main inerting line. The auxiliary steam supply is manually terminated. When the required inert containment pressure is reached, the CIS drywell pressure switch provides a signal to isolate the nitrogen supply shutoff valve.

Upon completion of the initial inerting, the CIS is manually or automatically aligned to its makeup mode. Makeup nitrogen is obtained by the automatic modulation of a pressure control valve on the nitrogen supply. The opening and closing of the pressure control valve is driven by the pressure controller in response to change of containment pressure. Makeup nitrogen supply is vaporized and heated up to an appropriate temperature by an electric heater that is manually loaded to its power

source. Once activated, it continues to operate in automatic on-off mode until manually disconnected. Temperature sensors provide switching signals to start or stop the heater. When the required temperature is reached, the heater automatically cuts off electrical power to the heater elements.

The de-inerting process is manually or automatically activated, by aligning the CIS with the RBVS to replace gases in the containment with breathable air.

During containment isolation events, the CIS containment isolation valves automatically close upon receipt of the isolation signal from LD&IS. Details of the isolation logic are discussed in Subsection 7.3.3.

The CIS can provide continued nitrogen makeup during isolation events. This is accomplished by overriding, with controlled bypass switches, the isolation signal to the makeup isolation valves.

A simplified system diagram is shown in Figure 6.2-29.

7.7.7.5.2 Instrumentation and Control

Drywell pressure sensors, part of the Containment Monitoring System (CMS), monitor containment pressure. These instruments provide input to the pressure controller that controls nitrogen makeup flow and provides alarm signals on a high drywell pressure condition.

Permanently installed temperature and humidity sensors are provided in several locations and elevations inside the containment. Outputs from these sensors are transmitted to the PCF for averaging and continuous monitoring of the containment. Drywell temperatures are provided directly to the LD&IS.

Oxygen analyzers monitor oxygen levels in the containment during startup, normal, and abnormal plant operating conditions. Two sample points (one in a high and one in a low location) are provided on opposite sides of each compartment (that is, the upper drywell area, lower drywell area, and wetwell air space). Each air lock is sampled. Oxygen levels in the CIS exhaust line are monitored. A high oxygen level indication is indicated in the MCR.

A flow-metering device is installed in the makeup line to monitor the amount of nitrogen makeup injected into the containment. Total nitrogen makeup flow (makeup flow to containment and makeup flow to the High Pressure Nitrogen Supply System (HPNSS) is also monitored. Total nitrogen flow indicates total containment atmosphere leakage during normal plant operation. An indication of excessive leakage is indicated in the MCR.

Separate flow metering devices are also provided to both drywell and wetwell inerting and de-inerting flows.

The CIS is described in detail in Subsection 6.2.5.2.

7.7.7.5.3 Alarms and Indications

The alarms and indications provided in the MCR are:

- High drywell pressure
- High nitrogen makeup flow
- Excessive or gross containment leakage
- High and low makeup flow temperature
- High and low electric heater temperature
- Low main vaporizer outlet temperature
- Low nitrogen storage tank level
- Disable switch in override position
- High oxygen level
- Wetwell pressure indication
- Valve position switch status indication
- Pilot solenoid status indication
- Drywell temperature
- Wetwell temperature

7.7.8 COL Information

None.

7.7.9 References

7.7-1 GE Hitachi Nuclear Energy, "Gamma Thermometer System for LPRM Calibration and Power Shape Monitoring," NEDE-33197P-A, Class III (Proprietary), Revision 3, October 2010, and NEDO-33197-A, Class I (Non-proprietary), Revision 3, October 2010.

7.7-2 (Deleted)

7.7-3 (Deleted)

Table 7.7-1 Major Plant Automation System Interfaces

APR Functions	Input Signals	Output Signals
Criticality Control	1. SRNM output (NMS) 2. Reactor mode (PGCS)	1. CR control demand (RC&IS) 2. Criticality / subcriticality validation check (PCF)
Heatup & Pressurization	1. SRNM output (NMS) 2. Reactor water temperature (PGCS) 3. Reactor heatup schedule (PCF) 4. Reactor mode (PGCS) 5. Dome Pressure (SB&PC System)	1. CR control demand (RC&IS) 2. SB&PC System pressure setpoint
Reactor Power Control	1. Target generator power (PGCS) 2. Pressure controller output (equivalent load) (SB&PC System) 3. Load demand change (SB&PC System) 4. Reactor mode (PGCS)	1. CR control demand (RC&IS) 2. Load demand (TGCS)
Generator Power Control	1. Generator power feedback signal (PGCS) 2. Reactor mode (PGCS)	1. CR control demand (RC&IS) 2. Load demand (TGCS)
Reactor Shutdown Control	1. CR full insert signal (RC&IS) 2. Reactor mode (PGCS)	1. CR control demand (RC&IS) 2. SB&PC System pressure setpoint

Notes: Various status signal interfaces are not shown in this table for brevity.
CR – Control Rod

Figure 7.7-1 Water Level Range Definition

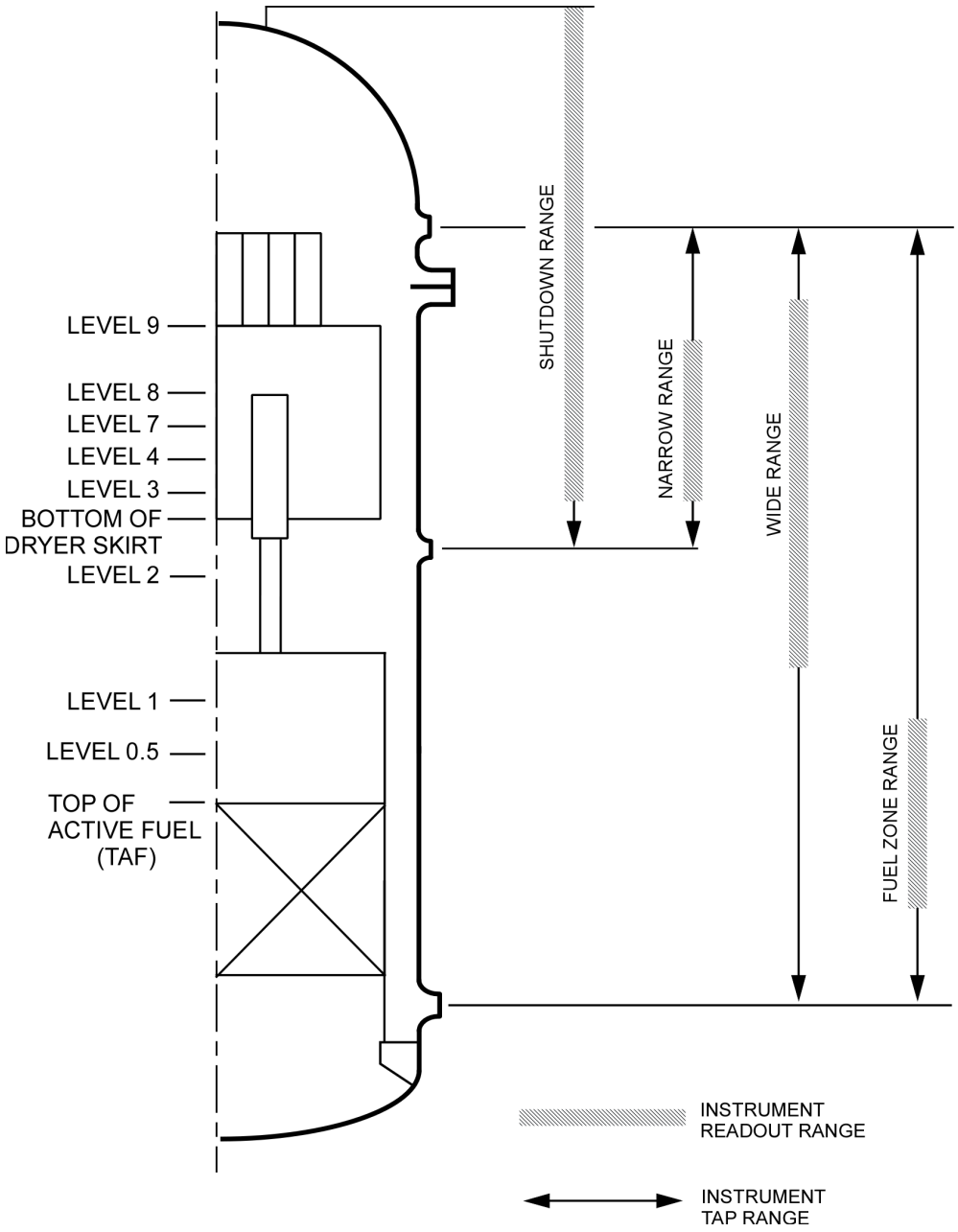

Figure 7.7-2 RC&IS Simplified Functional Block Diagram

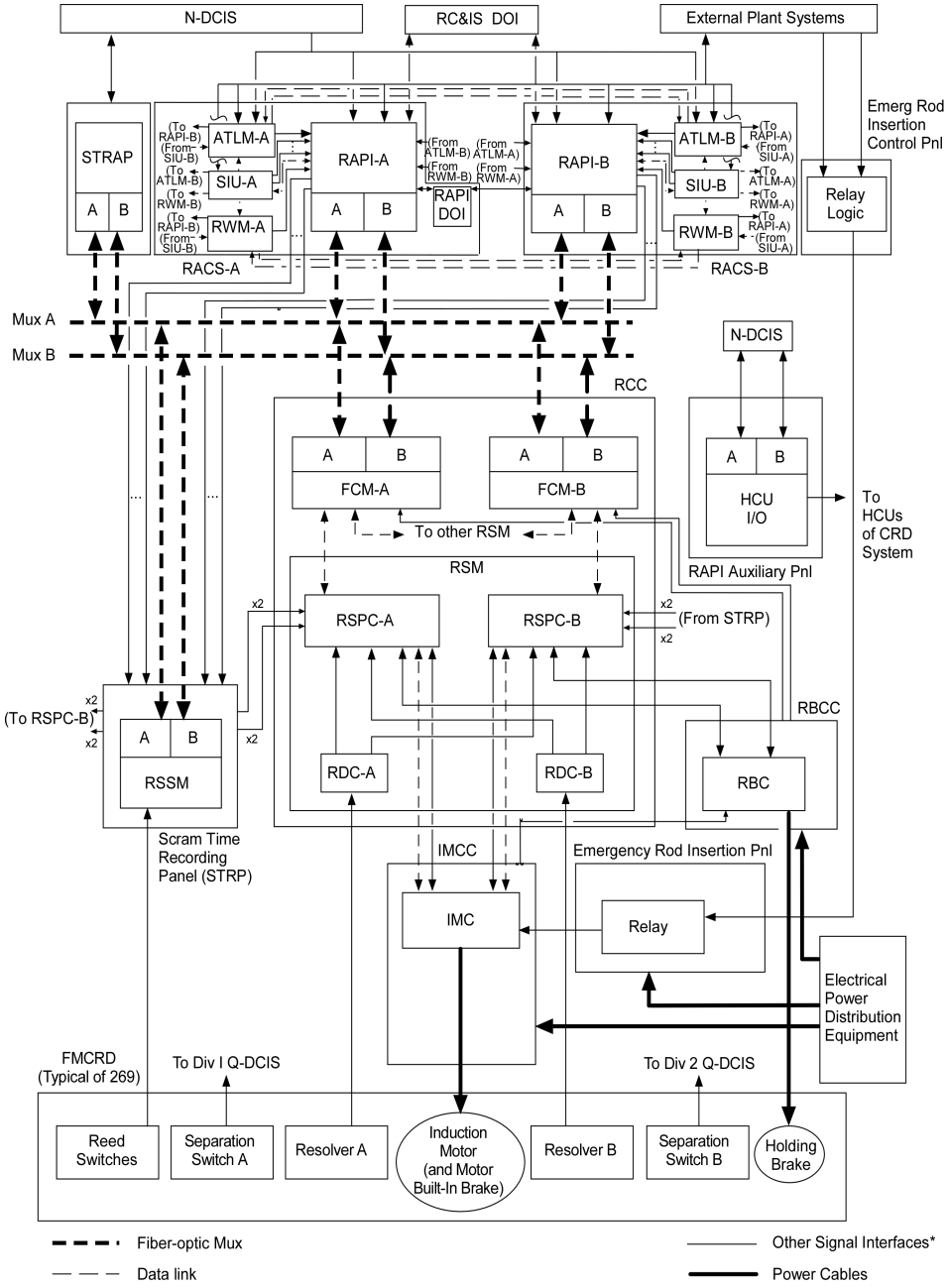

Figure 7.7-3 Feedwater Control System Simplified Functional Block Diagram

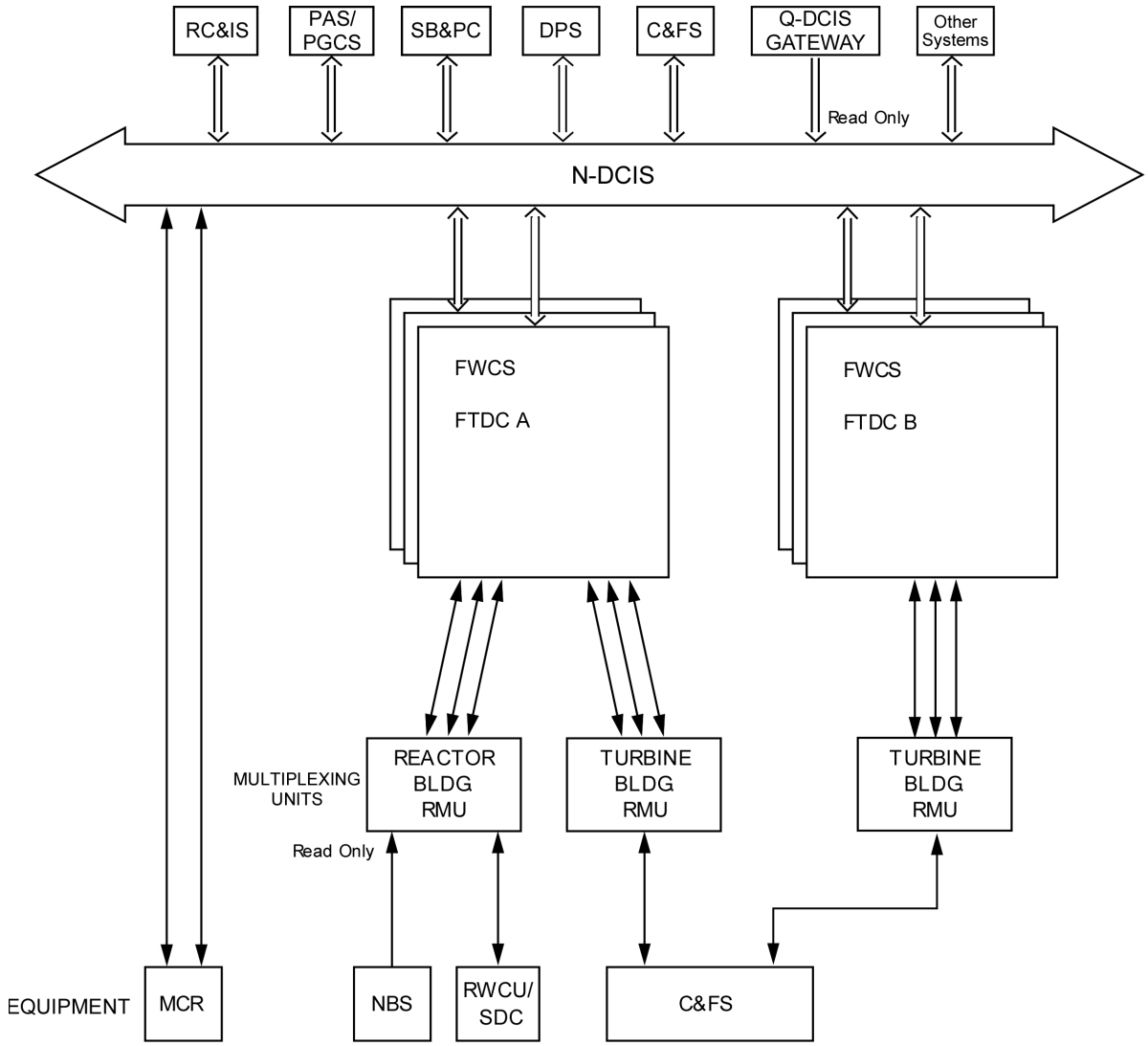

Figure 7.7-4 Plant Automation System Simplified Functional Diagram (Only major systems are shown)

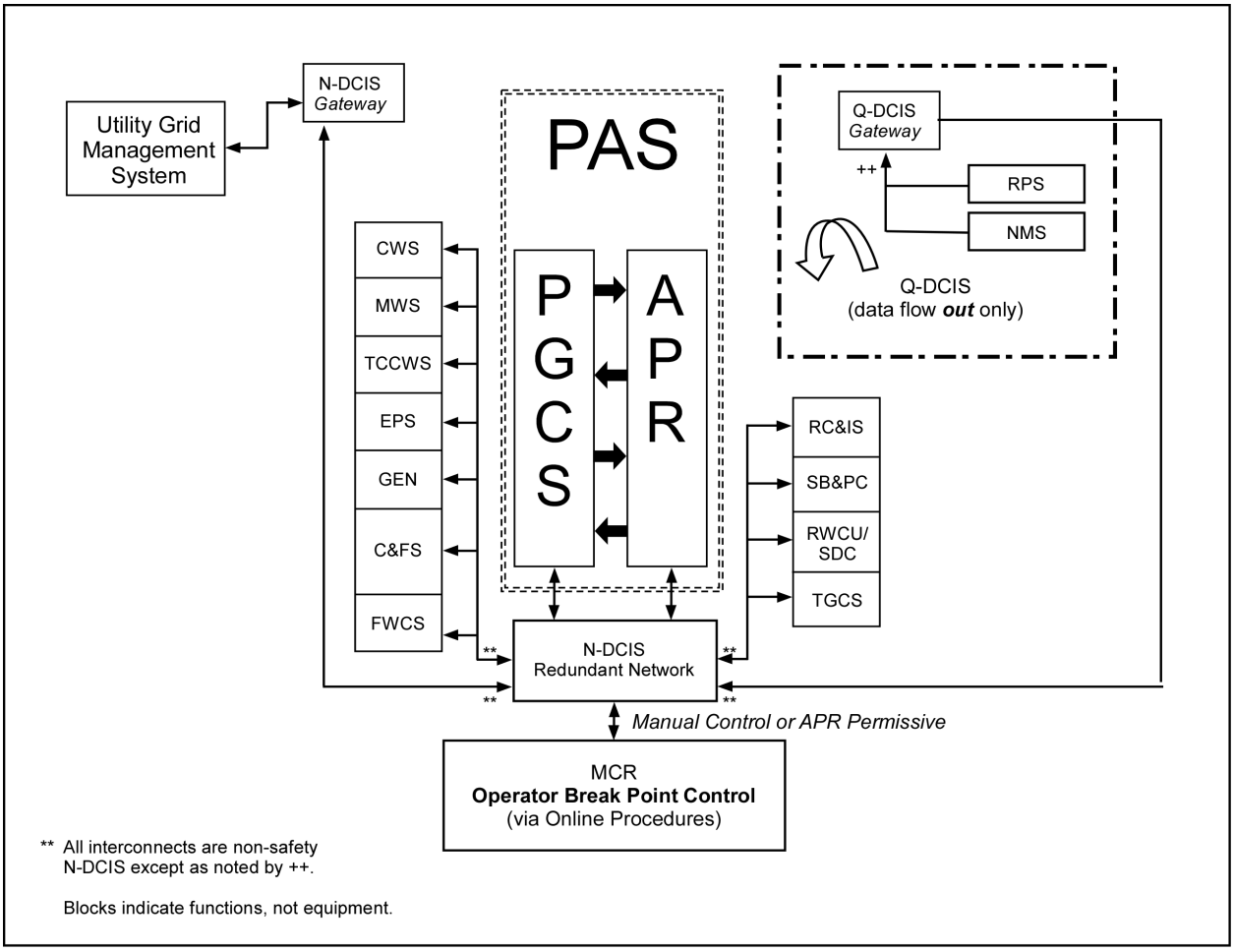

Figure 7.7-5 SB&PC System Simplified Functional Block Diagram

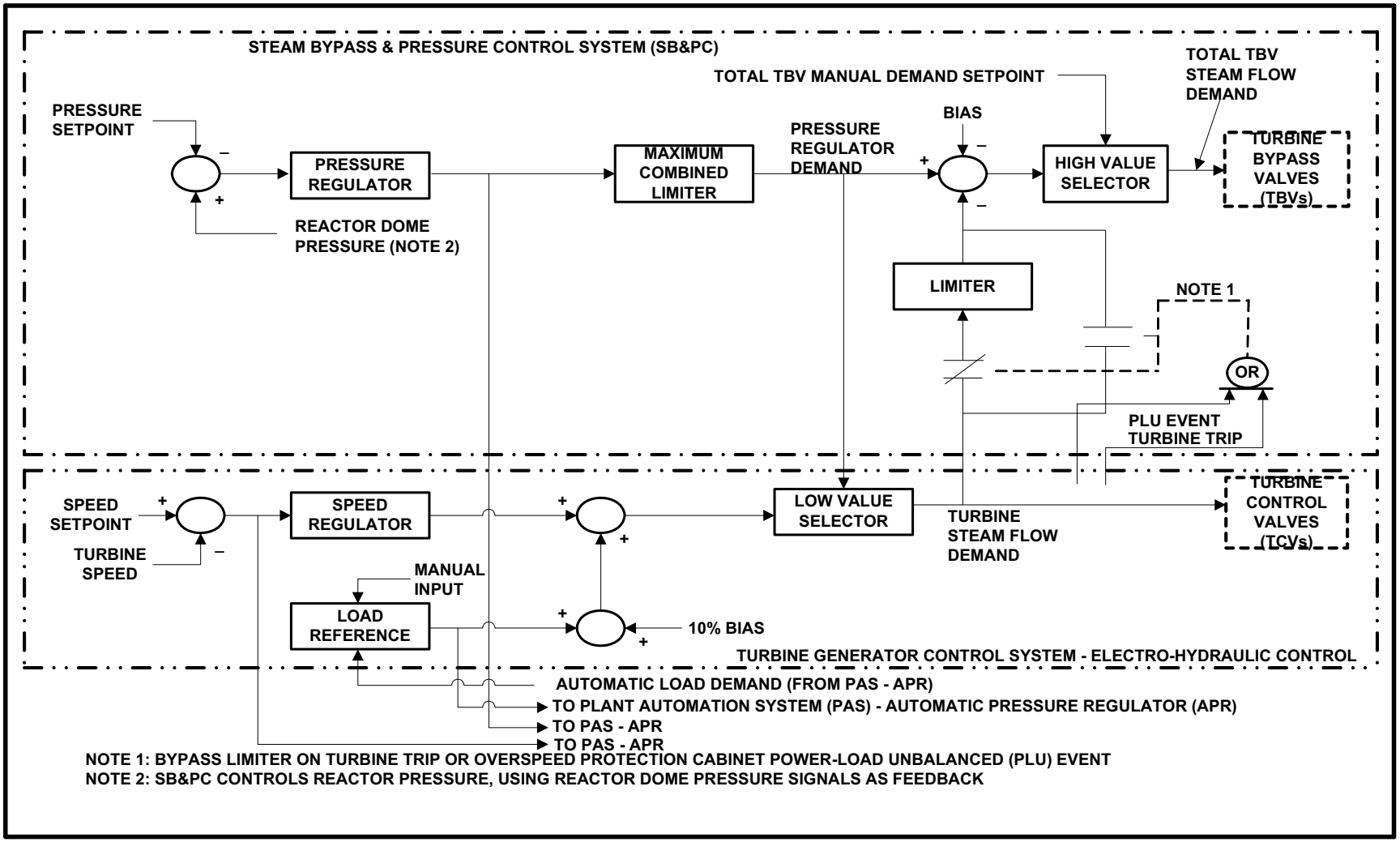

Figure 7.7-6 SB&PC System FTDC Simplified Functional Block Diagram

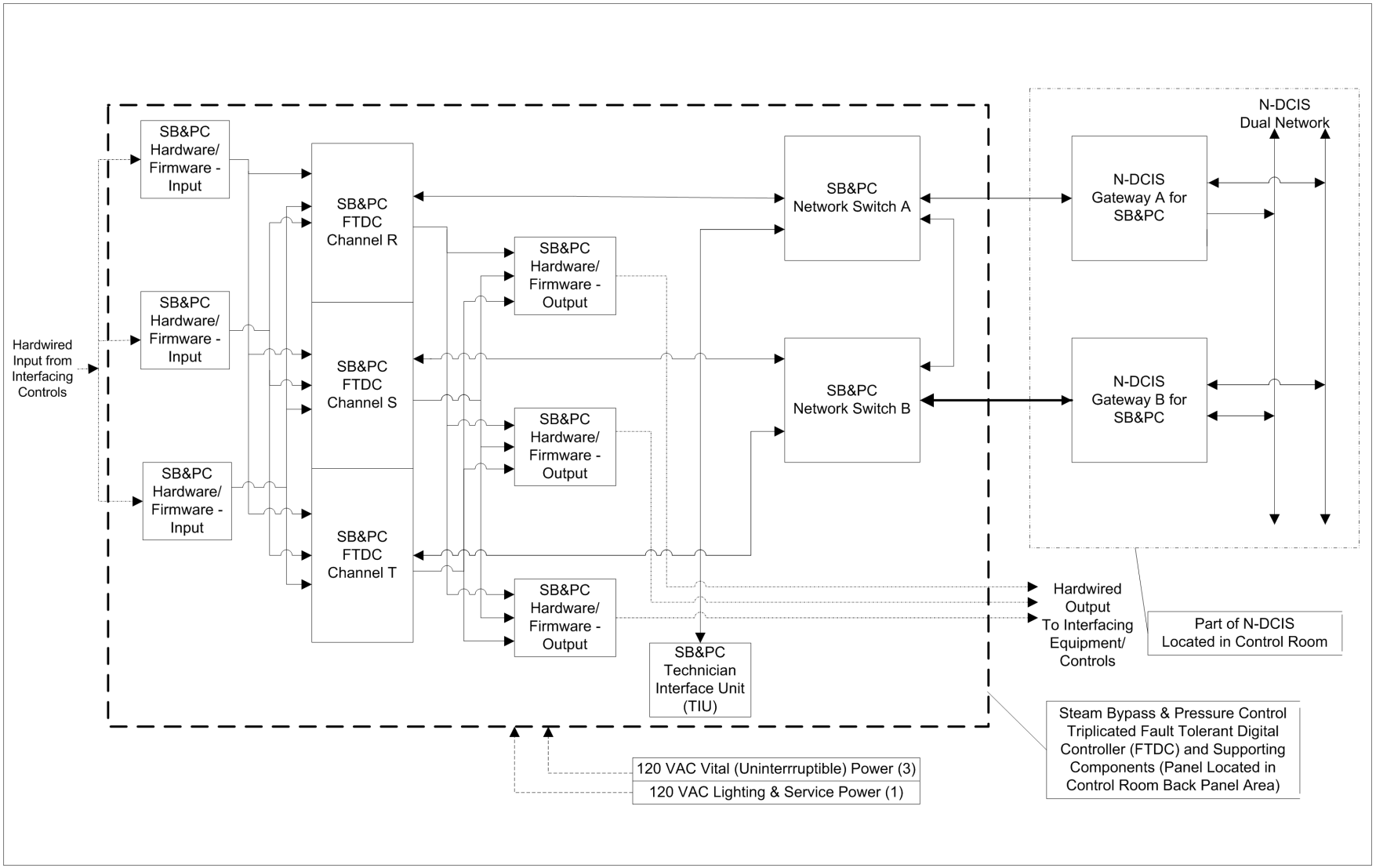

Figure 7.7-7 HP Feedwater Heater Temperature Simplified Control Block Diagram

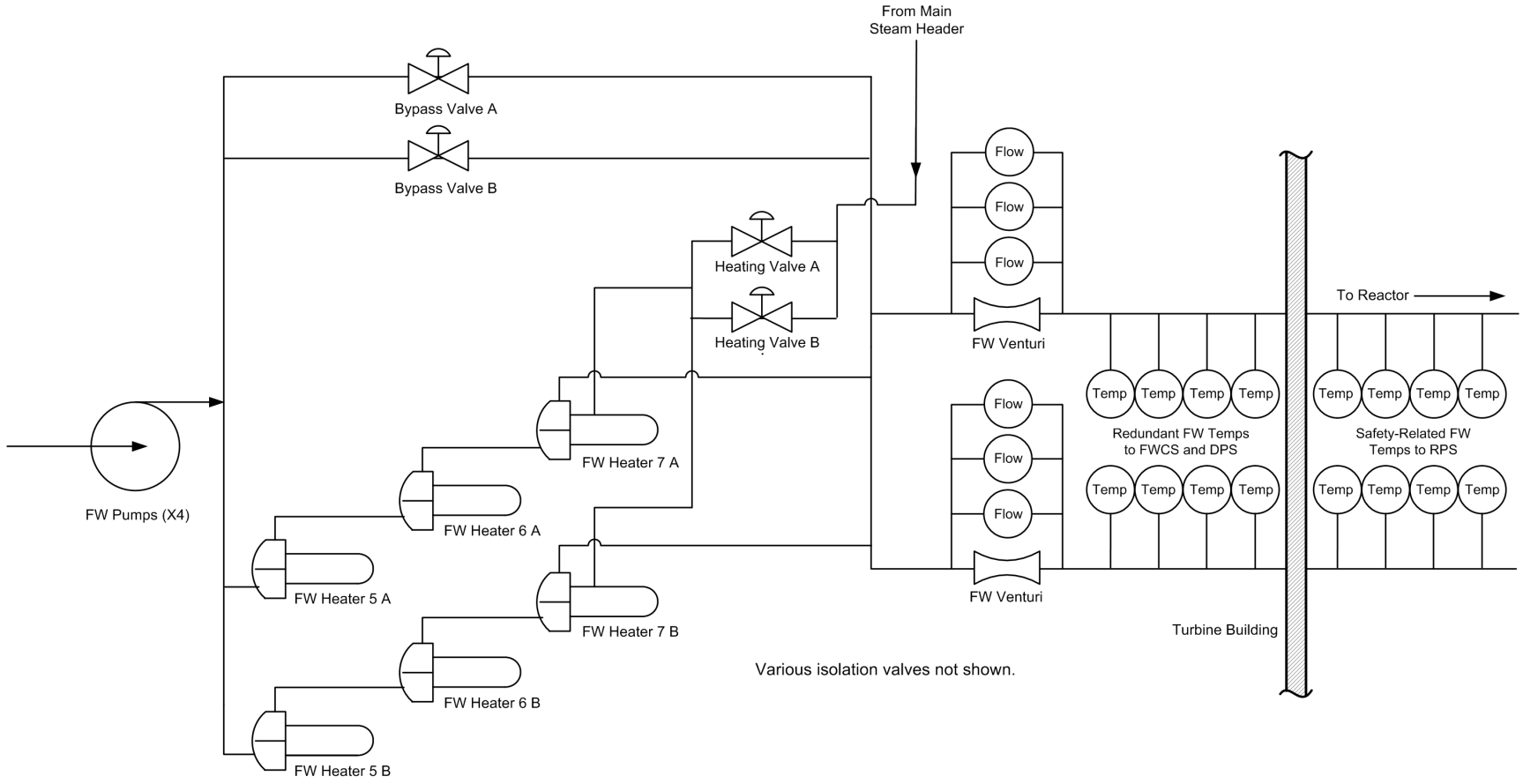

7.8 Diverse Instrumentation and Control Systems

7.8.1 System Description

The Anticipated Transient Without Scram and Standby Liquid Control (ATWS/SLC) system and the Diverse Protection System (DPS) comprise the diverse I&C systems that are part of the diversity and defense-in-depth strategy. They provide diverse backup to the Reactor Protection System (RPS) and the Safety System Logic and Control/Engineered Safety Features (SSLC/ESF). The ATWS mitigating logic is designed to meet the diverse shutdown requirements of 10 CFR 50.62, "Requirements For Reduction of Risk from Anticipated Transients Without Scram (ATWS) Events for Light-Water-Cooled Nuclear Power Plants." The ATWS mitigating logic system is implemented with the Safety-Related Distributed Control and Information System (Q-DCIS) and the Nonsafety-Related Distributed Control and Information System (N-DCIS).

The nonsafety-related DPS (which is part of the N-DCIS) processes the nonsafety-related portions of the ATWS mitigation logic. It is designed to mitigate the possibility of digital protection system common mode failures discussed in Item II.Q of SECY 93-087 and SRM on Item II.Q of SECY 93-087. Figure 7.8-1 provides a simplified block diagram of the DPS.

The relationships between the ATWS mitigation logic, the DPS, the Q-DCIS and the N-DCIS are discussed in Section 7.1. Figure 7.1-1 provides a simplified network functional diagram of the relationship between the ATWS/SLC System and the Q-DCIS, the DPS, and the N-DCIS.

The ATWS/SLC logic provides a diverse means of emergency shutdown using the SLC System for soluble boron injection. Alternate rod insertion, which hydraulically scrams the plant using the three sets of ARI valves of the Control Rod Drive (CRD) System, is also used for ATWS mitigation. This logic is implemented in the DPS. Detailed ATWS mitigation features are described later in this subsection.

The DPS is a nonsafety-related system and therefore part of N-DCIS. DPS is a regulatory treatment of non- safety systems (RTNSS) system. DPS is a triply redundant system powered by triply redundant nonsafety-related load group electrical power sources. The highly reliable, isolated, independent, and separate DPS provides diverse reactor scram using a subset of the RPS scram signals. The DPS provides diverse emergency core cooling by independently actuating the Emergency Core Cooling System (ECCS). The DPS performs selected containment isolation functions as part of the diverse ESF function. Any DPS manual initiation requires operation of two switches, with each switch requiring two distinct operator actions. Additional DPS features are described in Subsection 7.8.1.2.

The design scope of the DPS functions is based on the diversity and defense-in-depth strategy developed via analyses that show the design meets criteria of BTP HICB-19, as outlined in Licensing Topical Report (LTR) NEDO-33251, "ESBWR I&C Diversity and Defense-In-Depth Report." (Reference 7.8-1). A confirmatory analysis supports and validates the DPS design scope

requirements of BTP HICB-19. Conformance to BTP HICB-19 is described further in Subsection 7.8.3.5.

DPS Implementation

Although not itself a safety-related system, many of the DPS functions are classified as RTNSS functions and the backup functions that DPS provides are independently important even without the premise of a common cause failure in Q-DCIS. Like the overall Q-DCIS solution, the DPS is designed following the IEEE Std. 603 based design principles of:

- Independence
- Determinism (Determinant Data Processing and Communication)
- Redundancy
- Diversity

DPS is itself a high level ESBWR DCIS architectural design approach to addressing the design principle of diversity.

Independence Design Principle

The DPS performs its backup and common cause failure mitigation functions independently of Q-DCIS. DPS is on the N-DCIS GENE network segment which is independent of the other four N-DCIS network segments (i.e. BOP, PIP A, PIP B, PCF). All postulated Q-DCIS common cause failures that are mitigated by DPS use dedicated sensors (instrument) and initiator or actuators without input from other systems. Manual operation of DPS depends only on the nonsafety-related VDUs on the N-DCIS GENE network segment. DPS is powered independently by three uninterruptible power supplies and can operate successfully on only one. These power supplies have nothing in common with the safety-related power supplies. DPS can additionally operate from either the ancillary or standby diesel.

As with all DCIS controller cabinets, those for DPS reside in a normally unmanned room requiring badge access to the room and associated administrative controls. DPS cabinet doors are normally locked and are alarmed in the MCR. The DPS rooms are not in the same fire area as either the Q-DCIS or N-DCIS cabinets. All data communication to and from the DPS I/O modules is via triply redundant data communications implemented using optical fiber. The DPS RMUs are located in different fire areas of the reactor building. DPS data communication not used for common cause failure mitigation functions that originates from Q-DCIS to N-DCIS DPS is one way, isolated at its source, and implemented using optical fiber. All data communications are monitored and alarmed if communications are lost.

Where DPS must digitally inter- operate with other controllers, then it uses dedicated point-to-point data communications links using either hard copper wiring or optical fibers. The DPS data communications connection to the nonsafety-related N-DCIS GENE network segment is

implemented using optical fiber. No closed loop control or related data proccessing is done over these network links. The DPS data communication protocol is "Ethernet Global Data" (EGD) instead of TCP/IP. The EGD protocol does not require any message acknowledgement or "handshake". The DPS controller application processors cannot be interrupted by their supporting data communications. The DPS controller application program must be specifically set up to identify what "input" message or data communication is received or allowed and what "output" message is transmitted or broadcast. This restrictive data communications approach ensures adequate data independence from Q-DCIS and N-DCIS.

Determinism Design Principle

All nonsafety-related control in ESBWR is designed with the goal of and is expected to be deterministic. DPS offers a diverse nonsafety-related "backup" to reactor trip and ECCS control function initiation. DPS is one of the most critical RTNSS associated nonsafety-related functions. As with all ESBWR controllers, DPS does not use any of the five N-DCIS shared GENE network segments for closed loop control. All sensor input/output (I/O) and associated analog-to-digital (A/D) signal processing and related data acquisition are directly controlled by the DPS controller application processors. Like the SSLC/ESF Q-DCIS hardware/software platforms, the DPS controllers "poll" their data acquisition and therefore deliver determinism at the DPS "polling" rate. The I/O modules do not "interrupt" the main controller application processors. The DPS uses triply modular redundant (TMR) controller application processors that complete their cyclic real-time executive program loop or operate at the expected 10's of millisecond cycle time needed to support the reactor scram and ECCS control functions and have a similar time budget. The DPS application control processors are synchronized with each other but not with absolute time. Although absolute time is available to DPS for data time stamping, it is not required or used for any DPS plant process control function and those functions do not depend on the correctness or existence of the absolute time signals.

All of the DPS controller application processors run or use a cyclic real-time executive or operating system programs that include both the control function application as well as related support monitoring and diagnostics. These programs do not incorporate "interrupts". The cyclic real-time executive or operating system and related application programs are internal clock driven and do not use absolute time from an external source. These programs are not event driven and are monitored by both watchdog timers and the external Technical Specification Monitor (TSM) to diagnose any program loop execution failures to complete or "stalls". The TSM can also independently monitor other DPS functions. The DPS controller application program is changeable but only with security appropriate to a critical digital asset and after the alarmed cabinet doors are unlocked and other applicable administrative controls have been implemented. The DPS external communication links cannot be used to program the DPS controller application processors, such programming can only be done locally after the cabinet doors are unlocked and the DPS made out of service and alarmed. After the tested application program is downloaded, it will be monitored for change by the

self-diagnostics. Additionally, the self-diagnostics monitor the DPS clock, memory, I/O modules, and data communication paths. Although the DPS uses two-out-of-four trip voting logic for scram and ECCS control function initiations, it is not architected based on four divisions or "divisionalized". Each of the four plant process parameters or input measurements are sent to each of the triply modular redundant (TMR) controller application processors. Each controller application processor internally runs its own two-out-of-four trip voting logic. There is no external data communication necessary.

Redundancy Design Principle

The DPS is not configured in multiple different hardware/software instances. Instead, DPS is internally redundant. For all backup scram, isolation and ECCS functions, there are four sensor (instrument) signals per parameter. These sensors are diverse from those of Q-DCIS. The DPS sensor signals are acquired and processed by DPS specific RMUs in various reactor building fire areas. The DPS sensor "groups" are not "divisionalized" (not in four different "divisions"). The DPS sensors can be bypassed (i.e. not contribute to the two-out-of-four voting logic decision). Only one DPS sensor group can be bypassed at a time which is enforced by a "joystick" type switch and logic. All DPS sensors are independently measured by triply redundant I/O modules and sent via triply redundant data communication links implemented using optical fiber to each of the triply redundant controller application processors. Each DPS controller application processor performs its own two-out-of-four voting logic decision and sends the resulting trip or initiation decisions via triply redundant data communication implemented using optical fibers to the output load drivers. The DPS I/O processors individually perform their own two-out-of-three voting logic decision to operate the actuators. There are enough actuators to provide for system initiation or isolation requirements. The DPS logic is fail "as-is" (i.e. it energizes to actuate). The DPS contains enough monitoring and self-diagnostics and internal redundancy (via TMR architecture) to indicate when its required control function is challenged. The DPS will remain functional with any single failure and will alarm when it is no longer available to perform its control functions.

Defense in Depth and Diversity (D3) Design Principle

The DPS provides much of the diversity to counter common cause failures of the Q-DCIS and some N-DCIS failures. The primary contribution of DPS to the design principle of diversity is that it operates on a different hardware/software technology platform than any of the Q-DCIS hardware/software platforms. Therefore, it is not credible to assume that DPS would suffer a common cause failure or simultaneous failure with that associated with the Q-DCIS platforms. The DPS design approach assures that assuming the highly improbable complete failure of Q-DCIS, the DPS will still maintain the required radiation release limits on the site boundary.

The DPS provides both a hydraulic scram by interrupting the current to the HCU scram solenoids and a nonsafety-related backup scram by bleeding down the HCU air headers with its own solenoid valves. The DPS additionally performs a backup reactor shutdown by independently initiating SLC if

the hydraulic scram has failed. The DPS provides initiate or actuate signals to the nonsafety-related FMCRD motor driven scram by instructing the FMCRDs to ignore the RC&IS commands and insert all control rods. The DPS provides a backup MSIV and non- MSIV isolation function for the steam system's largest flow paths. The non- MSIV isolation function is performed in association with the RWCU/SDC system.

The DPS is a nonsafety-related, triple redundant system powered by redundant nonsafety-related load group power sources. The highly reliable, isolated, and independent DPS provides diverse reactor scram using a subset of the RPS scram signals. The DPS provides diverse emergency core cooling by independently actuating the Emergency Core Cooling System (ECCS). The DPS performs selected containment isolation functions as part of the diverse ESF function. Any DPS manual initiation requires operation of two switches, with each switch requiring two distinct operator actions. Additional DPS features are described in Subsection 7.8.1.2. The design scope of the DPS functions is based on the diversity and defense-in-depth strategy developed via analyses that show the design meets criteria of BTP HICB-19, as outlined in Licensing Topical Report (LTR) NEDO-33251, "ESBWR I&C Diversity and Defense-In-Depth Report." (Reference 7.8-1). A confirmatory analysis supports and validates the DPS design scope requirements of BTP HICB-19. Conformance to BTP HICB-19 is described further in Subsection 7.8.3.5.

Table 7.8-1 provides a summary of the functions, initiators, and interfacing systems used by the diverse I&C systems for ATWS mitigation or for mitigation of design basis events described in Chapter 15. Table 7.8-2 provides a list of the controls, interlocks, and bypasses used by the diverse I&C systems for ATWS mitigation or for mitigation of design basis events described in Chapter 15. Tables 7.8-3 and 7.8-4, both which address BTP HICB-19, describe additional diverse instrumentation and control features used to ensure that releases during a common mode protection system failure coincident with the design basis events discussed in the Safety Analysis of Chapter 15 do not exceed the radiation guidelines from 10 CFR 52.47(a)(2)(iv).

Mitigation of common mode failures is provided by:

- Manual scram and Main Steam Isolation Valve (MSIV) isolation by the operator in the Main Control Room (MCR) in response to diverse parameter indications.
- Availability of diverse manual initiation of the passive ECCS functions including Gravity-Driven Cooling System (GDCS) squib valve initiation, Safety Relief Valve (SRV) initiation, Depressurization Valve (DPV) initiation, Isolation Condenser System (ICS) initiation, ICS vent function, and SLC System squib valve initiation. Manual initiation functions are available in the safety-related systems and in the DPS.
- Core makeup water capability from the Condensate and Feedwater System (C&FS), CRD System, and Fuel and Auxiliary Pools Cooling System (FAPCS) in the Low Pressure Coolant Injection (LPCI) mode.

- Long-term shutdown capability in the two redundant Remote Shutdown System (RSS) panels which are equipped with Division 1 and 2 controls for manual scram and MSIV closure, Division 1 and 2 safety-related Video Display Units (VDUs), and nonsafety-related displays and controls to allow monitoring and control of all plant systems. Local displays of process variables in the RSS system are continuously powered and are available for monitoring at any time.
- Diverse scram, which is different from the safety-related RPS, using diverse hardware and software.
- Diverse ESF initiation logic, which is different from the SSLC/ESF, using diverse hardware and software.
- ATWS mitigation using liquid boron injection for emergency plant shutdown through the SLC system.
- ATWS mitigation using ARI to hydraulically scram the plant using the three sets of ARI valves of the CRD system.
- Selected Control Rod Run-in (SCRRI) command to the Rod Control and Information System (RC&IS).
- Select Rod Insert (SRI) to hydraulically insert selected control rods with every SCRRI action.
- Manual initiation capability of the ATWS mitigation functions (ARI/SLC/Feedwater Runback).

7.8.1.1 Anticipated Transients Without Scram Mitigation Functions

The ATWS mitigation control functions are:

- Automatic SLC System initiation, as shown in Figure 7.8-3. The SLC System is described in Subsection 7.4.1.
- Alternate rod insertion, as shown in Figure 7.8-2 and described in Subsections 7.7.2 and 7.8.1.1.2.
- Fine Motion Control Rod Drive (FMCRD) Run-in (or FMCRD Emergency Insertion) associated with the RC&IS, as shown in Figure 7.8-2 and described in Subsections 7.7.2 and 7.8.1.1.2.
- Feedwater runback, as shown in Figure 7.8-3 and described in Subsections 7.7.3, 7.8.1.1.1.1, 7.8.1.1.2, and 7.8.1.2.
- ARI and diverse scram plus delayed Feedwater runback for events where the RPS scram command has been unsuccessful in shutting down the reactor or when the SCRRI/SRI has been unsuccessful in reducing reactor power to an acceptable level, as described in Subsection 7.8.1.1.4.
- Automatic Depressurization System (ADS) Inhibit logic, which interfaces with select Engineered Safety Features to avoid escalation of an ATWS event to more serious events, is described in Subsections 7.8.1.1.1.2 and 7.8.1.2.3.

7.8.1.1.1 ATWS Mitigation Logic Implemented as Safety-Related Logic

The portion of the ATWS mitigation system implemented as safety-related logic is contained within the four divisions of the Reactor Trip and Isolation Function (RTIF) cabinets. The ATWS/SLC logic processing components are separate and diverse from the software-based RPS logicUnless there are space constraints, the RTIF cabinets house the ICP logic controllers that perform the ATWS/SLC function. The RPS is described in Subsection 7.2.1.

ATWS/SLC Analog Trip Modules (ATM), instead of Digital Trip Modules (DTM), perform setpoint comparisons for the automatic trip parameters in each division. Hardware-based discrete digital logic substitutes for software-based trip logic to perform two-out-of-four voting. Therefore, the hardware and software-based logic of this alternate emergency shutdown function is diverse from the hardware and software logic of the RPS function.

7.8.1.1.1.1 Anticipated Transients Without Scram System

There is an ATWS ICP in each of the four divisional RTIF cabinets (Refer to Figure 7.8-3). The ATWS ICP are separate and diverse from RPS circuitry. The ATWS ICP provides voting logic, control logic, and time delays for evaluating the plant conditions for automatic initiation of SLC boron injection and feedwater runback.

ATWS mitigation functions initiated by the ATWS/SLC ICP platform are described as follows.

- Automatic initiation of SLC boron injection:
  - High Reactor Pressure Vessel (RPV) dome pressure and a Startup Range Neutron Monitor (SRNM) ATWS permissive (an SRNM signal that is above a specified setpoint) for three minutes or greater; or
  - Low RPV water level (Level 2) and an SRNM ATWS permissive for three minutes or greater.
- Automatic initiation of feedwater runback:
  - High RPV dome pressure and SRNM ATWS permissive. A reset is permitted only when both signals drop below their setpoints. This signal is sent to the DPS for transmission to the FWCS.
- Automatic ADS Inhibit logic as described in Subsection 7.8.1.1.1.2.

ATWS mitigation logic processing features are described as follows.

- ATWS Mitigation Functions:
  - Performs the two-out-of-four voting function and additional interlock logic using data from ATMs and the Neutron Monitoring System (NMS).
  - Provides isolated hardwired contact outputs to the SLC System, the SSLC/ESF platform, and FWCS through the DPS.

- ATWS Mitigation Data Handling:
  - Discrete gate logic and hardware timers implement the ATWS mitigation logic. The input signals are hardwired, not multiplexed.
- ATWS Mitigation Status Monitoring and Communication:
  - Each ATWS mitigation ICP division processes the self-test logic. The self-test function is operator initiated and can only be performed with the associated ATWS mitigation ICP division bypassed.
  - Fiber-optic cables transmit ATWS mitigation logic and status to external interfaces.
- ATWS Mitigation Alarms:
  - Instrument Inoperative to N-DCIS (operating voltage degraded).
  - Division 1, 2, 3, and 4 ATWS SLC System injection logic tripped.
  - Division 1, 2, 3, and 4 ATWS FWCS runback logic tripped.

Manual initiation capability of the ATWS/SLC liquid boron injection is provided in the MCR, with SLC, ARI, and feedwater runback initiation occurring from the same manual controls. The ARI and feedwater runback features are described in further detail in Subsection 7.8.1.1.2.

The actuating signals for the SLC System and FWCS are hardwired, rather than multiplexed, to their respective system controllers. If one of the four ATWS mitigation IC is inoperable, signals are initiated to bypass the input signals from the out-of-service ICP so that the input voting logic changes from two-out-four to two-out-of-three. A manual bypass switch for this function is provided in the MCR.

The ATWS/SLC logic mitigates random failures with the divisional sensor channel or output trip channel bypass capability. A bypass places the remaining divisions in a two-out-of-three coincident logic condition so that another failure in a remaining division will not disable system operation.

7.8.1.1.1.2 **ADS Inhibit ATWS Mitigation Logic**

To prevent ATWS events from escalating to more serious events that approach the ADS initiation setpoint, automatic actuations occurring on sustained RPV Level 1 initiation and sustained drywell pressure high initiation by SSLC/ESF platform logic (which is described in Subsections 7.3.1.1.2 and 7.3.1.2.2) is inhibited by the ATWS/SLC logic. This function called the ADS Inhibit uses the following ATWS signals.

- Coincident low RPV water level (Level 2) and Average Power Range Monitor (APRM) ATWS permissive signals (i.e., an APRM signal that is above a specified setpoint from the NMS).
- Coincident high RPV pressure and APRM ATWS permissive signals that persists for 60 seconds.

Since drywell pressure increases that could approach the feedwater isolation setpoint may also occur during ATWS events the ADS Inhibit logic is also used to inhibit the feedwater isolation on high-high drywell pressure logic in the SSLC/ESF platform. The feedwater isolation logic is described in Subsection 7.3.3.3.

MCR controls are provided to manually inhibit the sustained RPV Level 1 initiation signal and sustained drywell pressure high initiation start signal by SSLC/ESF platform logic under ATWS conditions.

7.8.1.1.2 DPS Alternate Rod Insertion ATWS Mitigation Logic

The ARI function of the ATWS mitigation logic is implemented by nonsafety-related logic that is processed by the DPS. The DPS generates the signal to open the ARI valves in the CRD system based on any of the following command signals:

- High RPV dome pressure signal
- Low RPV water level signal (Level 2)
- Any diverse scram command identified in Subsections 7.8.1.1.4 or 7.8.1.2.1

Additionally, a safety-related manual ATWS mitigation signal identified in Subsection 7.8.1.1.1.1 initiates the SLC System, ARI and FWCS runback of feedwater flow. It is sent to the nonsafety-related portions of the ATWS mitigation logic through qualified isolation devices.

On receipt of signals initiating ARI, described above, the DPS generates an additional signal to the RC&IS to initiate electrical insertion (i.e., FMCRD Run-in) of all operable control rods.

The ARI and FMCRD Run-in logic resides in the DPS, which is separate and independent from the Q-DCIS with diverse hardware and software. The RPV pressure and level input sensors for the ARI logic are diverse from the sensors used in the Q-DCIS.

7.8.1.1.3 DPS SCRRI/SRI Logic

The DPS processes a SCRRI/SRI signal to hydraulically scram selected control rods and to command the RC&IS to perform the SCRRI function based on any of the following initiators:

- Generator load rejection signal from the Turbine Generator Control System (TGCS) (two-out-of-three logic).
- Turbine trip signal from the TGCS (two-out-of-three logic).
- Loss of feedwater heating based on C&FS and NMS signals (two-out-of-four logic).
- SCRRI/SRI signal from the ATLM (two-out-of-three logic).
- SCRRI signal from the RC&IS (two-out-of-three logic).
- Oscillation Power Range Monitor (OPRM) thermal neutron flux oscillation signal from the NMS (two-out-of-four logic).

It is also possible to initiate SCRRI and SRI manually from the MCR.

7.8.1.1.4 DPS Diverse Scram ATWS Mitigation Logic

On either a SCRRI/SRI command with power remaining elevated (two-out-of-three logic) or an RPS scram command (two-out-of-four logic) the DPS:

- Initiates a diverse scram (and ARI as indicated previously)
- Initiates a delayed feedwater runback if elevated power levels persist

7.8.1.2 DPS Diverse Instrumentation and Control

Diverse I&C functions other than the ATWS mitigation functions described previously are included in the DPS. These functions are outlined in Tables 7.8-3 and 7.8-4.

The DPS has a set of diverse reactor scram and diverse ESF logics that are implemented using diverse hardware and software from that of the RPS and SSLC/ESF.

The DPS transmits the feedwater runback signal from the ATWS mitigation logic to the FWCS. The DPS trips the feedwater pumps on high RPV water level (Level 9) after they have been run back to zero flow on high RPV water level (Level 8) by the Feedwater Control System as described by Subsection 7.7.3.

Additionally, the DPS provides diverse monitoring and indication of critical safety functions and process parameters required to support manual operations and assessment of plant status.

7.8.1.2.1 Diverse Scram Functions

The DPS diverse scram functions provide a diverse means of reactor shutdown and serve as backups to the RPS. A subset of the RPS scram signals is selected for inclusion in the DPS scope, which provides acceptable diverse protection results. This set of diverse protection logics for reactor scram, combined with the ATWS mitigation features, other diverse backup scram protection, and diverse ESF functions provides the necessary diverse protection to meet the required design position. The design position is specified in the SRM on SECY 93-087 and BTP HICB-19 (Referenced in NUREG-0800 Section 7). The scram signals selected for inclusion in the DPS are:

- High RPV pressure
- High RPV water level (Level 8)
- Low RPV water level (Level 3)
- High drywell pressure
- High suppression pool temperature
- Closure of the MSIVs

This diverse set of scram logics resides in diverse hardware and software equipment from the RPS. The sensors that provide input are diverse from those used for the RPS. The diverse logic equipment is nonsafety-related with triple redundant controller application processors executing coincident logic from four sensor channels. The DPS includes a sensor channel bypass capability. If a sensor is bad or bypassed, each of the three controller application processors will revert to two-out-of-three voting logic and if a processor fails, the output switches will revert to two-out-of-two logic.

The power sources for this diverse equipment are from the nonsafety-related load groups. The diverse scram logic is "energize-to-actuate" with the trip signal applied at the return side of the 120 VAC circuit for the CRD hydraulic control unit (HCU) scram pilot valve solenoids. The RPS scram initiation signal is applied at the supply side of the 120 VAC circuit.

The diverse scram logic is based on two-out-of-four coincident logic processed by two-out-of-three triple redundant controller application processors sent through three isolated fiber-optic cables to the scram timing panel. A two-out-of-three vote is performed at the scram timing panel to open the solenoid return power switches.

The DPS also provides the ability to initiate a manual scram from either hardwired switches or DPS displays.

7.8.1.2.2 Diverse Engineered Safety Features Functions

The ESF functions include core cooling provided by the GDCS and the SLC System and the ADS function using SRVs and DPVs. The pressure relief and core cooling function is also provided by the ICS. The ESF functions of the GDCS squib valves, SLC System squib valves, ICS, and ADS (SRVs and DPVs) are included in the DPS to provide diverse initiation of emergency core cooling. The initiating logic is based on low RPV water level (Level 1).

The DPS does not provide automatic initiation of the suppression pool equalizing function of the GDCS because it is not required for approximately 30 minutes. Therefore, manual suppression pool equalization capability is provided.

Manual capability is provided in the DPS logic circuitry to initiate the diverse ECCS functions of the GDCS, SLC System, ICS, and ADS (SRVs and DPVs). The DPS also provides the ability to generate diverse manual ECCS actuation from the DPS displays.

Additionally manual controls are provided for ADS and GDCS injection sequenced initiation. This control feature is provided to mitigate small and medium break LOCA scenarios that do not result in ECCS initiation from low RPV water level. DPS does not provide automatic ADS and GDCS injection start on sustained high drywell pressure since this function is not required for 60 minutes. Therefore, manual ADS and GDCS injection sequenced initiation capability is provided.

This set of nonsafety-related diverse ESF logics resides in diverse hardware and software equipment from the SSLC/ESF system. The process sensors that provide inputs to this diverse set

of logics are diverse from the sensors used in the SSLC/ESF systems. The diverse logic equipment is nonsafety-related with triple redundant controller application processors. The diverse equipment power source is nonsafety-related.

The initiation logic is "energize to actuate" similar to that for the SSLC/ESF. The diverse ECCS automatic initiation signal is based on two-out-of-four coincident logic processed by triple redundant controller application processors. If RPV Level 1 is sustained for ten seconds, the logic seals in and a DPS ECCS start signal is issued. The manual initiation signal is based on two-out-of-two coincident logic processed by triple redundant controller application processors. A coincident logic trip decision is required from two-out-of-three controller application processors to generate the start signal. Series discrete output switches independently process the two-out-of-three voted start signal. A valid initiation signal from all series output switches is required to generate diverse ECCS actuation. Figure 7.8-4 shows the DPS TMR logic processing.

For the SRV opening function, three of the four solenoids on each SRV are powered by three of the four divisional safety-related power sources in the ESF ADS. A fourth solenoid on each SRV is powered by the nonsafety-related load group, with the trip logic controlled by the DPS. All ten SRVs in the ADS are controlled by the DPS through the fourth solenoid on each valve.

For the DPV opening function, one of the four squib initiators on each DPV is controlled by and connected to the nonsafety-related DPS logic. However, the three other squib initiators on all of the DPVs are controlled simultaneously by the SSLC/ESF ADS logic. The reliability and availability of DPV initiation by the SSLC/ESF ADS function is not affected by the DPS logic. The typical ADS initiation logic arrangements applied in both the SSLC/ESF and DPS functions are illustrated in Figure 7.3-1a and Figure 7.3-1b. As shown in Figure 7.3-1a and Figure 7.3-1b, the logic contact circuit from the DPS is arranged in parallel with the SSLC/ESF circuit.

As described in Subsection 7.3.5, it takes three simultaneous triply redundant SSLC/ESF trip signals to initiate the DPV squib valve opening per division. It takes three simultaneous triply redundant DPS trip signals to initiate the DPV squib valve opening. This satisfies the single failure criterion for inadvertent squib valve initiation. With this arrangement, the initiation of the DPVs by DPS logic does not affect the reliability and availability of the DPV initiation function controlled by the SSLC/ESF logic.

The logic application to the GDCS squib valves from the SSLC/ESF and from the DPS is similar to that of the DPV logic application described above. Short term injection via the GDCS squib valves can be initiated both by the SSLC/ESF logic and by the DPS logic. For the GDCS squib valve-opening function, one of the four squib initiators on each GDCS valve is controlled by and connected to the nonsafety-related DPS logic. The DPS logic requires three simultaneous GDCS trip initiation signals to initiate a GDCS squib valve opening.

The logic application to the SLC System squib valves from the SSLC/ESF and from the DPS is similar to that of the DPV logic application described above, except that there is a dual instead of a

triple logic path. However, the SLC System squib valves are actuated by two independent safety-related divisions with one valve per loop that is also actuated by the DPS. This configuration allows the flow path of both SLC System loops to be available through activation from the DPS and from any safety-related division (Refer to Subsection 7.4.1 for a description of the SLC System).

The ICS logic is configured to allow the availability of each ICS loop flow path from the four safety-related divisions and the DPS.

7.8.1.2.3 ATWS Mitigation Logic to Inhibit ADS Initiation by DPS

To prevent ATWS events from escalating to more serious events (as described in Subsection 7.8.1.1.1.2), the DPS sustained RPV Level 1 logic is inhibited by the following signals:

- Coincident low RPV water level (Level 2) and SRNM ATWS permissive signals (i.e., an SRNM signal from the NMS that is above a specified setpoint).
- Coincident high RPV pressure and SRNM ATWS permissive signals that persist for 60 seconds.

The ADS inhibit logic also inhibits the ADS and GDCS Injection sequenced initiation from occurring via DPS logic.

The DPS — ADS Inhibit logic is also used to inhibit the DPS feedwater isolation on high-high drywell pressure (described in Subsection 7.8.1.2.4).

MCR controls are provided to inhibit the sustained RPV Level 1 logic, ADS and GDCS Injection sequenced initiation, and feedwater isolation on high-high drywell pressure logic within DPS under ATWS conditions.

7.8.1.2.4 Diverse Isolation Logic by DPS

The DPS also provides the following major isolations using two-out-of-four sensor logic and two-out-of-three processing logic. The isolation functions performed as part of the diverse ESF are "energize to actuate."

- Closure of the MSIVs on detection of high steam flow rate, low RPV pressure, or low RPV water level (Level 2). The isolation function is performed by contacts in the 120 VAC MSIV solenoid return circuit. The logic is enabled when the Reactor Mode Switch is in the Run position.
- Closure of the Reactor Water Cleanup and Shutdown Cooling (RWCU/SDC) isolation valves on high differential flow rate.
- Isolation of the feedwater lines on a feedwater line break inside containment or LOCA conditions that pose a challenge to containment design pressure. The line break is sensed by differential pressure between feedwater lines coincident with high drywell pressure. A feedwater isolation also occurs on high-high drywell pressure or high drywell pressure coincident with high drywell water level. The DPS trips the main feedwater pump adjustable speed drive (ASD) motor circuit breakers and closes the feedwater containment isolation valves.

- Isolation of CRD high pressure makeup water injection (HP CRD) on high drywell pressure coincident with high drywell level, or low level in two out of three GDCS pools.

7.8.1.2.5 Additional Functions of DPS

The following additional functions are performed by the DPS.

- With logic similar to the SSLC/ESF, the DPS initiates the ICS on high RPV dome pressure, low RPV water level (Level 2), or MSIV closure to provide core cooling.
- With logic similar to the SSLC/ESF, the DPS opens the ICS lower header vent valves after six hours of ICS initiation.
- The DPS trips the feedwater pumps on high RPV water level (Level 9).
- The DPS opens pool cross-connect valves between the equipment storage pool and the IC/PCCS expansion pools when a low level condition is detected in the IC/PCCS inner expansion pool to which the valves are connected. DPS uses the four nonsafety-related level sensors in each IC/PCCS inner expansion pool which are part of FAPCS (Subsection 9.1.3.5).

The diverse protection logics for ESF function initiation, in combination with the ATWS mitigation feature, other diverse backup scram protection, and selected diverse RPS logics provide the diverse protection necessary to satisfy the design position specified in BTP HICB-19.

7.8.1.3 Diverse Manual Controls and Displays

All safety-related systems have displays and controls located in the MCR that provide manual system-level actuation of their safety-related functions and monitoring of parameters that support those safety-related functions.

In addition to the manual controls and displays for the safety-related reactor protection and SSLC/ESF functions, the DPS also has displays and manual control functions that are independent and diverse from those of the safety-related protection and SSLC/ESF functions. They are not subject to the same common mode failure as the safety-related protection system components. The manual controls permit manual initiation of the SRV, DPV, GDCS, and SLC System valves, and the ICS.

The operator is provided with a set of diverse displays separate from those supplied through the safety-related software platform. The displays that provide independent confirmation of the status of major process parameters include:

- Reactor pressure
- Reactor pressure high alarm
- RPV water level
- RPV water level high alarm
- RPV water level low alarm

- Drywell pressure
- Drywell pressure high alarm
- Drywell water level
- Drywell water level high alarm
- Suppression pool temperature
- Suppression pool temperature high alarm
- SRV solenoid-controlled valves opening
- DPV squib-initiation valves opening
- GDCS squib-initiation valves opening
- GDCS pool level
- GDCS pool level low alarm
- SLC System squib injection valves opening
- ICS operation

In addition to the controls provided by the primary safety-related systems, the RSS provides manual control of shutdown cooling functions and continuous local display of monitored process parameters.

7.8.2 Common Mode Failure Defenses Within Safety-Related System Design

7.8.2.1 Design Techniques for Optimizing Safety-Related Hardware and Software

In addition to the DPS, other techniques ensure safety-related system reliability by minimizing both random and common mode failure probabilities. They are:

- The total amount of hardware is minimized.
- Micro-processors with a simple operating system are used.
- High quality components are used.
- Self-diagnostics are implemented.
- The man-machine interface (MMI) is implemented so that the equipment is structured into small units with sufficient diagnostics that a user can repair equipment by replacing modules and can operate the equipment by following straightforward instructions.
- The software design process specifies modular code.
- Software modules have one entry and one exit point and are written using a limited number of program constructs.
- Code is segmented by system and function:

- Program code for each safety-related system resides in independent modules that perform setpoint comparison, voting, and interlock logic.
- Code for calibration, signal input/output, on-line diagnostics, and graphical displays are common to all systems.
- Fixed message formats are used for plant sensor data, equipment activation data, and diagnostic data. Thus, corrupted messages are detected by error-detecting software in each digital instrument.

- Software design uses recognized defensive programming techniques, backed up by self-diagnostic software and hardware watchdog timers.
- Software for control programs is permanently embedded as firmware in controller Read-Only Memory (ROM).
- Commercial development tools and languages with a known history of successful applications in similar designs are used for software development.
- Automated software tools aid in verification and validation (V&V).
- *Reliable software is implemented by ensuring that the quality of the design and requirements specification is controlled under the formal V&V program which is discussed in the LTR "ESBWR - Software Quality Assurance Program Manual" (Reference 7.8-3.)*

7.8.2.2 Defense Against Common Mode Failure

In addition to the DPS and the ATWS mitigation features, safety-related logic processing systems used in the RPS and SSLC/ESF perform the following simple and repetitive tasks. These tasks are performed continuously and simultaneously in four independent and redundant divisions of logic. They are:

- Setpoint comparison
- Two-out-of-four voting logic processing
- Control and interlock logic processing
- Input/output signal processing
- Self-testing

The development of common software modules for many of these functions offers advantages that:

- Produce reliable programs
- Promote standardization and code reusability
- Minimize program design errors
- Minimize timing differences among channels

The V&V program reduces the probability of common mode failure to a very low level. The simple modules used in each division can be thoroughly tested during the validation process. In addition to software V&V, the RPS and SSLC/ESF contain system level and functional level defenses against common mode failure, including defenses within the software itself.

7.8.2.2.1 System Level Defenses

Operational defenses include:

- Asynchronous operation of multiple protection divisions. Timing signals are not exchanged among divisions.
- Automatic error checking on all multiplexed transmission paths. Only the last valid data is used for logic processing. If a permanent fault is detected, the channel alarms and a trip is initiated for the RPS and MSIV isolation functions.
- Continuous cross-checking of redundant sensor inputs.
- Continuous on-line surveillance of trip functions with divisional bypass capability for the RPS and MSIV isolation functions.
- Continuous self-test with alarm outputs in all system devices.

Functional defenses include:

- Automatic error detection. This permits early safe shutdown or bypass before common mode effects occur. Instantaneous, simultaneous, and undetected failure on a common mode error is unlikely.
- Separation and independence requirements that protect against global effects resulting from such factors as Electromagnetic Interference (EMI) and thermal conditions.

Software defenses:

The functional program logic in the RPS and SSLC/ESF controllers provides protection against common mode failures using:

- Redundant sensors. Data messages from the sensors have unique identifications in each division.
- Identical modules that provide simple verifiable functions such as setpoint comparison and two-out-of-four logic.
- Standard protocols for multiplexing and other data transmission functions that are verified to industry standards and are qualified to safety-related standards.

7.8.3 Safety Evaluation

The DPS is designed as a highly reliable nonsafety-related system that meets the probabilistic risk assessment (PRA) requirements to minimize failures on demand and to minimize inadvertent operation. The DPS components are designed to ensure that reliability goals and system design

requirements are met. The sensors and actuation devices that interface directly with safety-related structures, systems, or components (SSCs) are qualified to meet the Seismic Category I classification.

Consistent with the guidance in IEEE Std. 603, Section 5.6 and IEEE Std. 384, the nonsafety-related DPS is designed to avoid adverse interaction with the protection systems with which it interfaces. Because the DPS logic does not communicate with the RPS logic, credible DPS failure modes do not prevent the RPS from performing a reactor scram. The DPS cannot cause the RPS to initiate a reactor scram prematurely. Credible DPS failure modes cannot prevent the SSLC/ESF actuation system from initiating ECCS functions or performing fission product barrier isolation functions. Additionally, credible DPS failure modes cannot result in premature operation of these protection systems.

The ATWS/SLC logic is designed to mitigate a failure of the normal reactor trip system to function and is diverse from and independent of the RPS. The ATWS/SLC logic platform is designed as a safety-related system with four independent divisions powered from divisionally separated safety-related power sources. Each redundant division of ATWS/SLC logic, which uses two-out-of-four voting logic, is capable of performing ATWS mitigation during reactor operation.

A quality assurance program that meets or exceeds the guidance contained in NRC Generic Letter 85-06, "Quality Assurance Guidance for ATWS Equipment That Is Not Safety-Related," is applied to all diverse I&C systems and components described in this section. Software used in diverse instrumentation and control systems is designed and developed in accordance with the requirements of Reference 7.8-3.

The guidance contained in the SRM on Item II.Q of SECY 93-087, SRP BTP HICB-19, and Generic Letter 85-06 is applicable to the DPS and to all portions of the systems shown in Figure 7.8-1 and identified in Table 3.2-1 that are required to perform sense and actuate functions in support of the diverse instrumentation and control functions described in this Section.

Table 7.1-1 identifies the diverse I&C and the associated codes and standards applied, in accordance with the SRP. This subsection addresses I&C systems conformance to regulatory requirements, guidelines, and industry standards.

7.8.3.1 Code of Federal Regulations

10 CFR 50.34(f)(2)(iii)[I.D.1], Human factors engineering principles applied to control room design:

- Conformance: The diverse I&C systems design conforms to these requirements.

10 CFR 50.34(f)(2)(iv)[I.D.2], Plant safety parameter display requirements:

- Conformance: The diverse I&C systems design conforms to these requirements.

10 CFR 50.34(f)(2)(v)[I.D.3], Bypass and operable automatic status indication of safety systems:

- Conformance: The safety-related ATWS mitigation logic conforms to these requirements.

10 CFR 50.43(e), Innovative means of accomplishing safety functions:

- Conformance: When innovative means are used in the I&C design it complies with 10 CFR 50.43(e).

10 CFR 50.49, Environmental qualification of electric equipment important to safety for nuclear power plants:

- Conformance: See Table 3.11-1 (Electrical and Mechanical Equipment for Environmental Qualification).

10 CFR 50.55a(a)(1), Quality standards for systems important to safety:

- Conformance: The diverse I&C systems design conforms to these standards.

10 CFR 50.55a(h), Protection and safety systems compliance with IEEE Std. 603:

- Conformance: The safety-related portions of the diverse I&C conform to IEEE Std. 603. Conformance information is found in Subsections 7.1.6.6.1 through 7.1.6.6.1.27. Additional information concerning how the diverse I&C conforms to IEEE Std. 603 is discussed below.
    - IEEE Std. 603, Section 4.2 (Safety-related Functions): See Subsection 7.8.1.
    - IEEE Std. 603, Section 4.3 (Permissive Conditions for Operating Bypasses): Permissive conditions for operating bypasses are for the Diverse I&C system are described in Tables 7.8-1 and 7.8-2.
    - IEEE Std. 603, Section 4.6 (Spatially Dependent Variables): Spatial dependency of monitored variables is not applicable to the Diverse I&C system beyond that discussed in Subsection 7.1.6.6.1.1.
    - IEEE Std. 603, Section 5.2 (Completion of Protective Actions): Completion of Protective Actions is not applicable to the Diverse I&C system beyond that discussed in Subsection 7.1.6.6.1.3.
    - IEEE Std. 603, Section 5.6: See Subsection 7.8.3.
    - IEEE Std. 603, Section 5.7 (Capability for Test and Calibration): Capability for Test and Calibration is not applicable to the Diverse I&C system beyond that discussed in Subsection 7.1.6.6.1.8.
    - IEEE Std. 603, Sections 6.2 and 7.2 (Manual Control): Manual Control is not applicable to the Diverse I&C system beyond that discussed in Subsection 7.1.6.6.1.18.
    - IEEE Std. 603, Section 6.4 (Derivation of System Inputs): Derivation of System Inputs is not applicable to the Diverse I&C system beyond that discussed in Subsection 7.1.6.6.1.20.

- IEEE Std. 603, Section 6.5 (Capability of Test and Calibration): Capability for Test and Calibration is not applicable to the Diverse I&C system beyond that discussed in Subsection 7.1.6.6.1.8.
- IEEE Std. 603, Sections 6.6 and 7.4 (Operating Bypasses): Operating Bypasses for the Diverse I&C system are described in Table 7.8-2.
- IEEE Std. 603, Sections 6.7 and 7.5 (Maintenance Bypasses): Maintenance bypasses for the Diverse I&C system are not applicable beyond that discussed in Subsection 7.1.6.6.1.23.
- IEEE Std. 603, Section 8.2 (Non-Electrical Power Sources): Non-Electrical power sources for the Diverse I&C system are not applicable beyond that discussed in Subsection 7.1.6.6.1.26.
- IEEE Std. 603, Section 8.3 (Maintenance Bypasses): Maintenance bypasses for the Diverse I&C system power sources are not applicable beyond that discussed in Subsection 7.1.6.6.1.27.

10 CFR 50.62, Requirements for reduction of risk from ATWS events for light-water-cooled nuclear power plants:

- Conformance: The ATWS mitigation functions described in Subsection 7.8.1.1 are designed in accordance with the requirements of 10 CFR 50.62.

10 CFR 52.47, Contents of applications; technical information, level of design information:

- Conformance: The level of detail provided for the diverse I&C functions within the DCD conforms to this requirement.

10 CFR 52.47(a)(21), Resolution of unresolved and generic (medium- and high-priority) safety issues identified in NUREG-0933:

- Conformance: Resolution of unresolved and generic safety issues is discussed in Section 1.11.

10 CFR 52.47(a)(25), Interface requirements for portions of the plant not within scope of certified design application:

- Conformance: There are no interface requirements for this section.

10 CFR 52.47(b)(1), ITAAC in design certification application:

- Conformance: ITAACs are provided for the diverse I&C systems and equipment in Tier 1.

10 CFR 52.47(c)(2), Innovative means to accomplish safety function design completeness requirements per 10 CFR 50.43(e):

- Conformance: The diverse I&C systems design may use innovative means for accomplishing safety functions.

7.8.3.2 General Design Criteria

General Design Criteria (GDC) 1, 2, 4, 13, 19, and 24:

- Conformance: The DPS design conforms to these GDC.

General Design Criteria (GDC) 1, 2, 4, 13, 19, 20, 21, 22, 23, 24, and 29:

- Conformance: The safety-related ATWS mitigation logic design conforms to these GDC.

The design of the diverse I&C systems does not compromise the ability of the RPS and SSLC/ESF actuation system to meet the requirements of 10 CFR 50 Appendix A, "General Design Criteria for Nuclear Power Plants," Section III, "Protection and Reactivity Control Systems."

7.8.3.3 Staff Requirements Memoranda

SRM on Item II.Q of SECY 93-087:

- Conformance: The SRM requirements applicable to the diverse I&C functions state that, "If a postulated common-mode failure could disable a safety function, then a diverse means, with a documented basis that the diverse means is unlikely to be subject to the same common-mode failure as the safety system shall be required to perform either the same function as the safety system function that is vulnerable to common mode failure or a different function." It also states, "The diverse or different function may be performed by a non-safety system if the system is of sufficient quality to perform the necessary functions under the associated event conditions." With respect to manual control and display functions, it states, "A set of displays and controls located in the main control room shall be provided for manual system-level actuation of critical safety functions and monitoring of parameters that support the safety functions. The displays and controls shall be independent and diverse from the safety computer systems."

The implementation of the DPS and the ATWS mitigation features as described in Subsection 7.8.1, in conjunction with the RPS and ESF designs, conforms to the above SRM requirements.

7.8.3.4 Regulatory Guides

RG 1.22, Periodic Testing of Protection System Actuation Functions:

- Conformance: The safety-related ATWS mitigation logic conforms to the guidance in RG 1.22. This RG is not applicable to the nonsafety-related DPS.

RG 1.47, Bypassed and Inoperable Status Indication for Nuclear Power Plant Safety Systems:

- Conformance: The safety-related ATWS mitigation logic conforms to the guidance in RG 1.47. Automatic indication is provided in the MCR to inform the operator that the system is inoperable or a division is bypassed. This RG is not applicable to the nonsafety-related DPS.

RG 1.53, Application of the Single Failure Criterion to Safety Systems:

- Conformance: The safety-related ATWS mitigation logic is organized into four physically and electrically isolated divisions that use the principles of independence and redundancy to

conform to the single failure criterion as defined by IEEE Std. 379, Section 4, and IEEE Std. 603, Section 5.1; additionally the design meets N-2 conditions. Analyses complying with IEEE Std. 379 will be used to confirm the safety-related system designs' conformance to the single failure criterion. This RG is not applicable to the nonsafety-related DPS.

RG 1.62, Manual Initiation of Protection Actions:

- Conformance: The safety-related ATWS mitigation logic conforms to the guidance in RG 1.62. This RG is not applicable to the nonsafety-related DPS.

RG 1.75, Criteria for Independence of Electrical Safety Systems:

- Conformance: The safety-related ATWS mitigation logic conforms to the guidance in RG 1.75. This RG is not applicable to the nonsafety-related DPS.

RG 1.89, Environmental Qualification of Certain Electric Equipment Important to Safety for Nuclear Power Plants:

- Conformance: See Table 3.11-1 (Electrical and Mechanical Equipment for Environmental Qualification).

RG 1.97, Criteria for Accident Monitoring Instrumentation for Nuclear Power Plants:

- Conformance: The ESBWR I&C conforms to RG 1.97. Specific instruments credited for RG 1.97 compliance are determined as part of the HFE development process as discussed in Subsection 7.5.1.3.4.

RG 1.100, Seismic Qualification of Electric and Mechanical Equipment for Nuclear Power Plants:

- Conformance: See Sections 3.9 (Mechanical Systems and Components) and 3.10 (Seismic and Dynamic Qualification of Mechanical and Electrical Equipment).

RG 1.105, Setpoints for Safety-Related Instrumentation:

- Conformance: The safety-related ATWS mitigation logic setpoints are consistent with this guide. The guidance in RG 1.105 is also applied to any portions of the nonsafety-related DPS used for maintaining automatic initiation function required by the Technical Specifications. Reference 7.8-4 provides a detailed description of the GEH setpoint methodology.

RG 1.118, Periodic Testing of Electric Power and Protection Systems:

- Conformance: The safety-related ATWS mitigation logic conforms to the guidance in RG 1.118. This RG is not applicable to the nonsafety-related DPS.

RG 1.151, Instrument Sensing Lines:

- Conformance: The safety-related ATWS mitigation logic conforms to the guidance in RG 1.151. Sections of endorsed standard ISA-67.02.01 on design practices for tubing, vents, and drains also apply to sensing lines that support DPS.

RG 1.152, Criteria for Use of Computers in Safety Systems of Nuclear Power Plants:

- Conformance: The diverse I&C conforms to the guidance in RG 1.152.

RG 1.153, Criteria for Safety Systems:

- Conformance: The safety-related ATWS mitigation logic is designed to satisfy the requirements of IEEE Std. 603, as endorsed by RG 1.153. This RG is not applicable to the nonsafety-related DPS.

RG 1.168, Verification, Validation, Reviews, and Audits for Digital Computer Software Used in Safety Systems of Nuclear Power Plants:

- Conformance: The diverse I&C conforms to the guidance in RG 1.168.

RG 1.169, Configuration Management Plans for Digital Computer Software Used in Safety Systems of Nuclear Power Plants:

- Conformance: The diverse I&C conforms to the guidance in RG 1.169.

RG 1.170, Software Test Documentation for Digital Computer Software used in Safety Systems of Nuclear Power Plants:

- Conformance: The diverse I&C conforms to the guidance in RG 1.170.

RG 1.171, Software Unit Testing for Digital Computer Software used in Safety Systems of Nuclear Power Plants:

- Conformance: The diverse I&C conforms to the guidance in RG 1.171.

RG 1.172, Software Requirements Specifications for Digital Computer Software Used in Safety Systems of Nuclear Power Plants:

- Conformance: The diverse I&C conforms to the guidance in RG 1.172.

RG 1.173, Developing Software Life Cycle Processes for Digital Computer Software Used in Safety Systems of Nuclear Power Plants:

- Conformance: The diverse I&C conforms to the guidance in RG 1.173.

RG 1.180, Guidelines for Evaluating Electromagnetic and Radio-Frequency Interference in Safety-Related Instrumentation and Control Systems:

- Conformance: See Table 3.11-1 (Electrical and Mechanical Equipment for Environmental Qualification).

RG 1.204, Guidelines for Lightning Protection of Nuclear Power Plants:

- Conformance: The safety-related ATWS mitigation logic conforms to the guidance provided in RG 1.204.

RG 1.209, Guidelines for Environmental Qualification of Safety-Related Computer-Based Instrumentation and Control Systems in Nuclear Power Plants:

- Conformance: See Table 3.11-1 (Electrical and Mechanical Equipment for Environmental Qualification).

7.8.3.5 Branch Technical Position

BTP HICB-8, Guidance for Application of Regulatory Guide 1.22:

- Conformance: The safety-related ATWS mitigation logic conforms to the guidance in HICB-8. This BTP is not applicable to the nonsafety-related DPS.

BTP HICB-10, Guidance on Application of Regulatory Guide 1.97:

- Conformance: The ESBWR I&C conforms to RG 1.97. Specific instruments credited for RG 1.97 compliance are determined as part of the HFE development process as discussed in Section 7.5.

BTP HICB-11, Guidance on Application and Qualification of Isolation Devices:

- Conformance: The safety-related ATWS mitigation logic conforms to BTP HICB-11. BTP HICB-11 is not applicable to the nonsafety-related DPS because all interfacing isolation devices are part of the safety-related systems.

BTP HICB-12, Guidance on Establishing and Maintaining Instrument Setpoints:

- Conformance: The safety-related ATWS mitigation logic conforms to the guidance in HICB-12. This BTP is not applicable to the nonsafety-related DPS.

BTP HICB-14, Guidance on Software Reviews for Digital Computer-Based Instrumentation and Control Systems:

- Conformance: The safety-related ATWS mitigation logic conforms to the guidance in HICB-14. This BTP is not applicable to the nonsafety-related DPS.

BTP HICB-16, Guidance on the Level of Detail Required for Design Certification Applications Under 10 CFR Part 52:

- Conformance: The level of detail for the diverse I&C systems conform to BTP HICB-16.

BTP HICB-17, Guidance on Self-Test and Surveillance Test Provisions:

- Conformance: The safety-related ATWS mitigation logic conforms to the guidance in HICB-17. This BTP is not applicable to the nonsafety-related DPS.

BTP HICB-18, Guidance on the Use of Programmable Logic Controllers in Digital Computer-Based Instrumentation and Control Systems:

- Conformance: The safety-related ATWS mitigation logic conforms to the guidance in HICB-18. This BTP is not applicable to the nonsafety-related DPS.

BTP HICB-19, Guidance on Evaluation of Defense-in-Depth and Diversity in Digital Computer-Based Instrumentation and Control Systems:

- Conformance: Reference 7.8-1 details the echelons of defense used in the design that conforms to BTP HICB-19. This document also discusses the basis for selection of the DPS functions used as backups for the RPS and SSLC/ESF. A FMEA based on the Guidance in NUREG/CR-6303 (Reference 7.8-2) is performed to ensure the radiation guidelines from 10 CFR 52.47(a)(2)(iv) are not exceeded in the event of a common mode failure of the RPS or SSLC/ESF software platform during the design basis events discussed in the Safety Analyses, i.e., Chapter 15.

BTP HICB-21, Guidance on Digital Computer Real-Time Performance:

- Conformance: The safety-related ATWS mitigation logic conforms to the guidance in HICB-21. This BTP is not applicable to the nonsafety-related DPS.

7.8.4 Testing and Inspection Requirements

Periodic testing to verify proper operation of the ATWS/SLC logic is performed. Periodic testing to verify proper operation of the DPS logic is also performed.

7.8.5 Instrumentation and Control Requirements

The ATWS/SLC uses logic that is diverse from the RPS. Logic and controls for ATWS/SLC are located in divisional RTIF cabinets. Operating status is available to the operator in the MCR. Division of sensors bypass capability is provided for the ATWS/SLC logic. Communication with external interfaces is through isolation devices. Provisions are made to allow testing of the ATWS/SLC logic and maintenance of the ATWS/SLC equipment.

The DPS uses triple redundant micro-processor based automatic actuation logic that is diverse from the RPS and SSLC/ESF automatic actuation logic.

The information available to the operator from the diverse I&C systems is described in Subsection 7.8.1.3.

7.8.6 COL Information

None.

7.8.7 References

7.8-1 GE Hitachi Nuclear Energy, “ESBWR I&C Diversity and Defense-In-Depth Report,” NEDO-33251, Class I (Non-proprietary), Revision 3, September 2010.

7.8-2 NUREG/CR-6303, “Method for Performing Diversity and Defense-in-Depth Analyses of Reactor Protection Systems, December 1994.

7.8-3 *GE Hitachi Nuclear Energy, "ESBWR - Software Quality Assurance Program Manual," NEDE-33245P, Class III (Proprietary), Revision 5, February 2010, and NEDO-33245, Class I (Non-proprietary), Revision 5, February 2010.*

7.8-4 *GE Hitachi Nuclear Energy, "GEH ESBWR Setpoint Methodology," NEDE-33304P, Class III (Proprietary), Revision 4, May 2010, and NEDO-33304, Class II (Non-proprietary), Revision 4, May 2010.*

Table 7.8-1 Diverse Instrumentation and Control Systems Functions, Initiators, and Interfacing Systems for ATWS Mitigation or Chapter 15 Design Basis Events[1]

Function	Initiator	Interfacing Systems
SLC system initiation (ATWS/SLC)	RPV dome pressure high and Startup Range Neutron Monitor (SRNM) signal greater than ATWS setpoint (SRNM ATWS permissive) with time delay	NBS, NMS, SLC
	RPV water level low (Level 2) and SRNM ATWS permissive with time delay	NBS, NMS, SLC
Feedwater Runback (ATWS/SLC)	RPV dome pressure high and SRNM ATWS permissive	NBS, NMS, FWCS
ADS inhibit (ATWS/SLC)	RPV water level low (Level 2) and APRM ATWS permissive	NBS, NMS, SSLC/ESF, LD&IS
	RPV dome pressure high and APRM ATWS permissive with time delay	NBS, NMS, SSLC/ESF, LD&IS
SCRRI/SRI (DPS)	Generator load rejection signal	TGCS, RPS, RC&IS
	Turbine trip signal	TGCS, RPS, RC&IS
	Loss of Feedwater heating	C&FS, NMS, RPS, RC&IS
	ATLM SCRRI/SRI signal	RPS, RC&IS
	RC&IS SCRRI signal	RC&IS, RPS
	OPRM thermal neutron flux oscillation	NMS, RPS, RC&IS
Delayed Feedwater Runback (DPS)	SCRRI/SRI signal and power levels remain elevated	NMS, RC&IS, FWCS
	RPS scram command and power levels remain elevated	RPS, NMS, FWCS
ATWS ARI and FMCRD motor run-in (DPS)	RPV dome pressure high	NBS, CRD, RC&IS
	RPV water level low (Level 2)	NBS, CRD, RC&IS
	Diverse scram command	CRD, RC&IS

Note:

1. Implementing system is shown in parentheses

Table 7.8-2 Diverse Instrumentation and Control Systems Controls, Interlocks and Bypasses for ATWS Mitigation or Chapter 15 Design Basis Events[1]

Control	Manual initiation of ATWS SLC (ATWS/SLC)
	Manual initiation of ATWS ARI (ATWS/SLC)
	Manual initiation of ATWS Feedwater Runback (ATWS/SLC)
	Manual initiation of FMCRD Run-in (DPS)
	Manual inhibit of sustained RPV Level 1 initiation logic and sustained drywell pressure high initiation logic under ATWS conditions[2] (ATWS/SLC)
	Manual inhibit of feedwater isolation under ATWS conditions[2] (ATWS/SLC)
Interlock	SRNM ATWS Permissive (ATWS/SLC)
	APRM ATWS Permissive (ATWS/SLC)
	Time Delays
Bypass	Division of sensor bypass (ATWS/SLC)
	Sensor channel bypass (DPS)

Notes:

1. Implementing system is shown in parentheses.
2. For applicable ATWS conditions, refer to Initiator column, Table 7.8-1, for the Function “ADS inhibit (ATWS/SLC).”

Table 7.8-3 Diverse Instrumentation and Control Systems Functions, Initiators, and Interfacing Systems to Address BTP HICB-19[1] (Sheet 1 of 2)

Function	Initiator	Interfacing Systems
Diverse Scram (DPS)	RPV dome pressure high	NBS, RPS
	RPV water level high (Level 8)	NBS, RPS
	RPV water level low (Level 3)	NBS, RPS
	Drywell pressure high	CMS, RPS
	Suppression pool temperature high	CMS, RPS
	MSIV closure	NBS, RPS
	RPS Scram	RPS
	SCRRI/SRI command with power levels remaining elevated	NMS, RC&IS, RPS
ADS initiation (DPS)	RPV water level low (Level 1)	NBS
GDCS initiation (DPS)	RPV water level low (Level 1)	NBS, GDCS
ICS initiation (DPS)	RPV water level low (Level 1)	NBS, ICS
	RPV water level low (Level 2)	NBS, ICS
	MSIV closure	NBS, ICS
	RPV dome pressure high	NBS, ICS
ICS vent function (DPS)	Six hours after ICS initiation	ICS
SLC system initiation (DPS)	RPV water level low (Level 1)	NBS, SLC
MSIV closure (DPS)	Steam flow high	NBS
	RPV pressure low	NBS
	RPV water level low (Level 2)	NBS
RWCU/SDC isolation valve closure (DPS)	Differential flow rate high	RWCU/SDC
Feedwater Isolation (DPS)	Line differential pressure high coincident with drywell pressure high	C&FS, CMS
	Drywell pressure high coincident with drywell water level high	CMS
	Drywell pressure high-high	CMS

Table 7.8-3 Diverse Instrumentation and Control Systems Functions, Initiators, and Interfacing Systems to Address BTP HICB-19[1] (Sheet 2 of 2)

Function	Initiator	Interfacing Systems
Feedwater Pump Trip (DPS)	RPV water level high (Level 9)	NBS, FWCS
IC/PCCS expansion pool to equipment storage pool cross-connect valve opening (DPS)	Low IC/PCCS expansion pool water level	FAPCS, ICS
ADS inhibit[2] (DPS)	RPV water level low (Level 2) and SRNM ATWS permissive	NBS, NMS
	RPV dome pressure high and SRNM ATWS permissive with time delay	NBS, NMS

Notes:

1. Implementing system is shown in parentheses
2. Inhibits logic within DPS only

Table 7.8-4 Diverse Instrumentation and Control Systems Controls, Interlocks and Bypasses to Address BTP HICB-19[1]

Control	Manual initiation of ADS (DPS)
	Manual initiation of ICS (DPS)
	Manual initiation of GDCS squib-initiated injection valves (DPS)
	Manual initiation of GDCS squib-initiated equalization valves (DPS)
	Manual scram (DPS)
	Manual MSIV isolation (DPS)
	Manual inhibit of the sustained RPV Level 1 logic and ADS and GDCS injection sequenced initiation controls under ATWS conditions[2] (DPS)
	Manual inhibit of feedwater isolation on drywell pressure high-high under ATWS conditions[2] (DPS)
	Manual SCRRI/SRI (DPS)
Interlock	SRNM ATWS Permissive (DPS)
	Reactor Mode (RPS, DPS)
	Time Delays
Bypass	Sensor channel bypass (DPS)

Notes:

1. Implementing system is shown in parentheses.
2. For applicable ATWS conditions, refer to Initiator column, Table 7.8-3, for the Function “ADS inhibit (DPS).”

Figure 7.8-1 DPS Simplified Functional Block Diagram

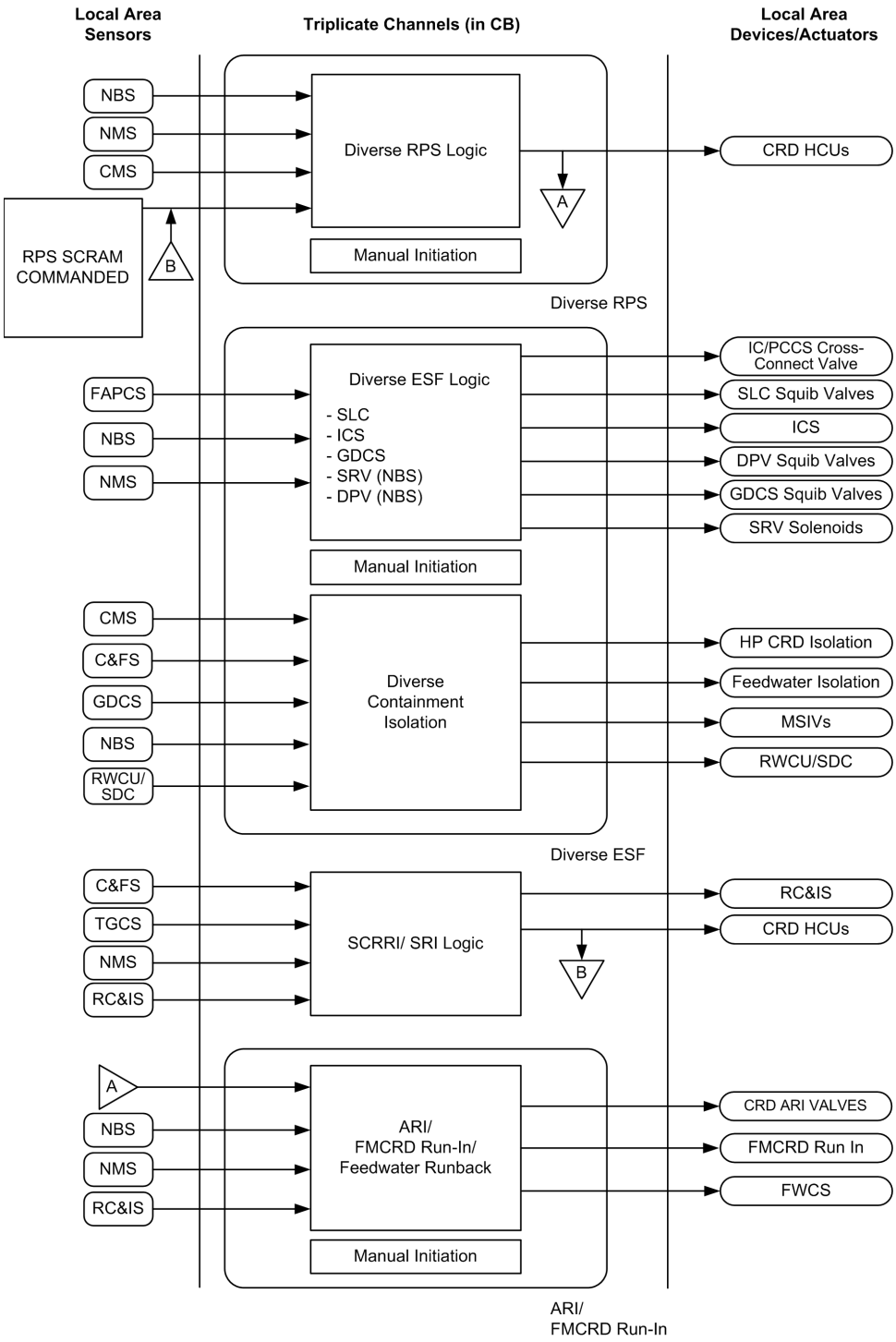

Figure 7.8-2 Alternate Rod Insertion & FMCRD Run-in Logic

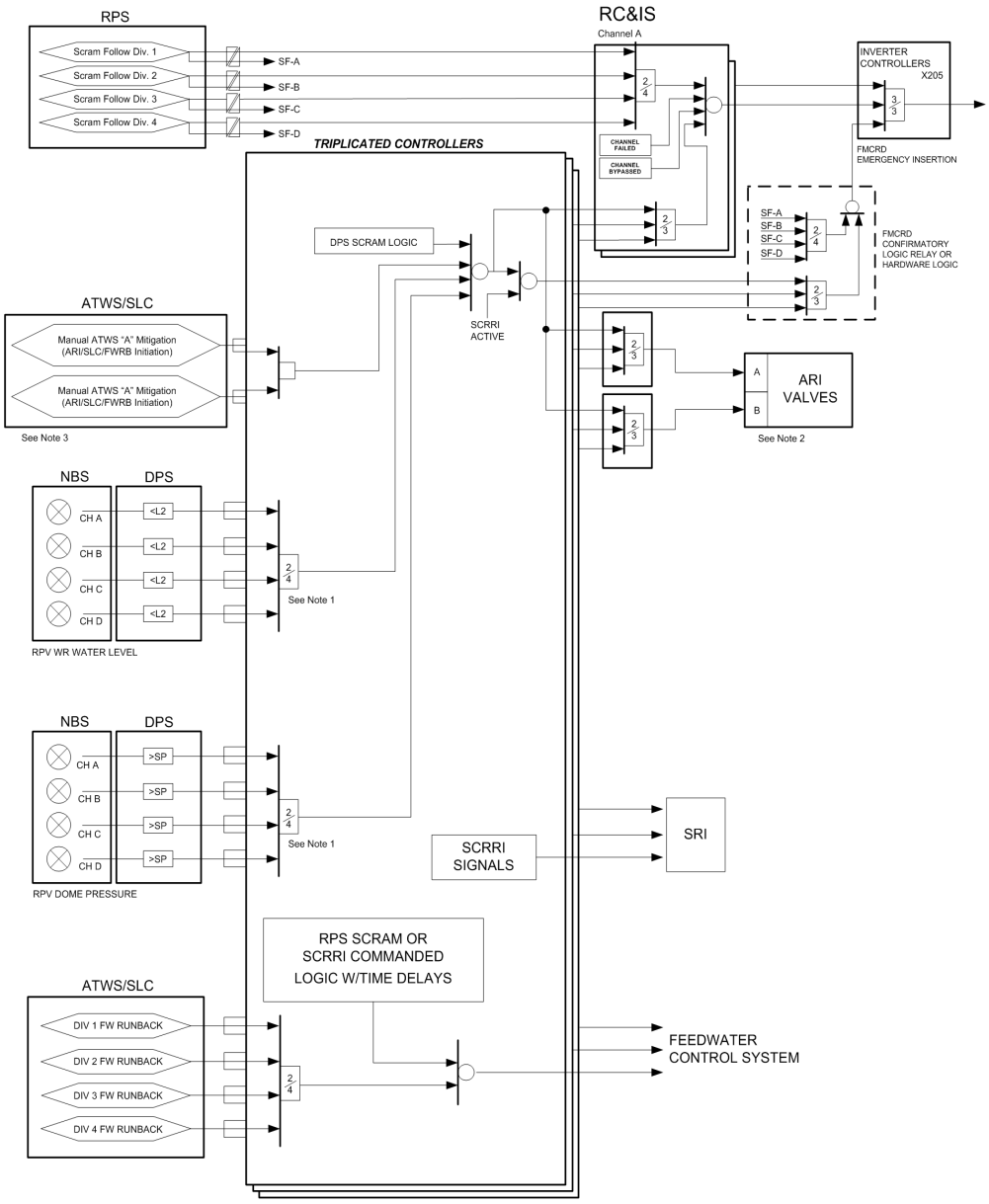

Note:
1. Comparison is part of ARI logic.
2. The ARI valves are part of CRD System.
3. Both manual pushbutton switches armed to initiate

Figure 7.8-3 ATWS Mitigation Logic (SLC System Initiation, Feedwater Runback)

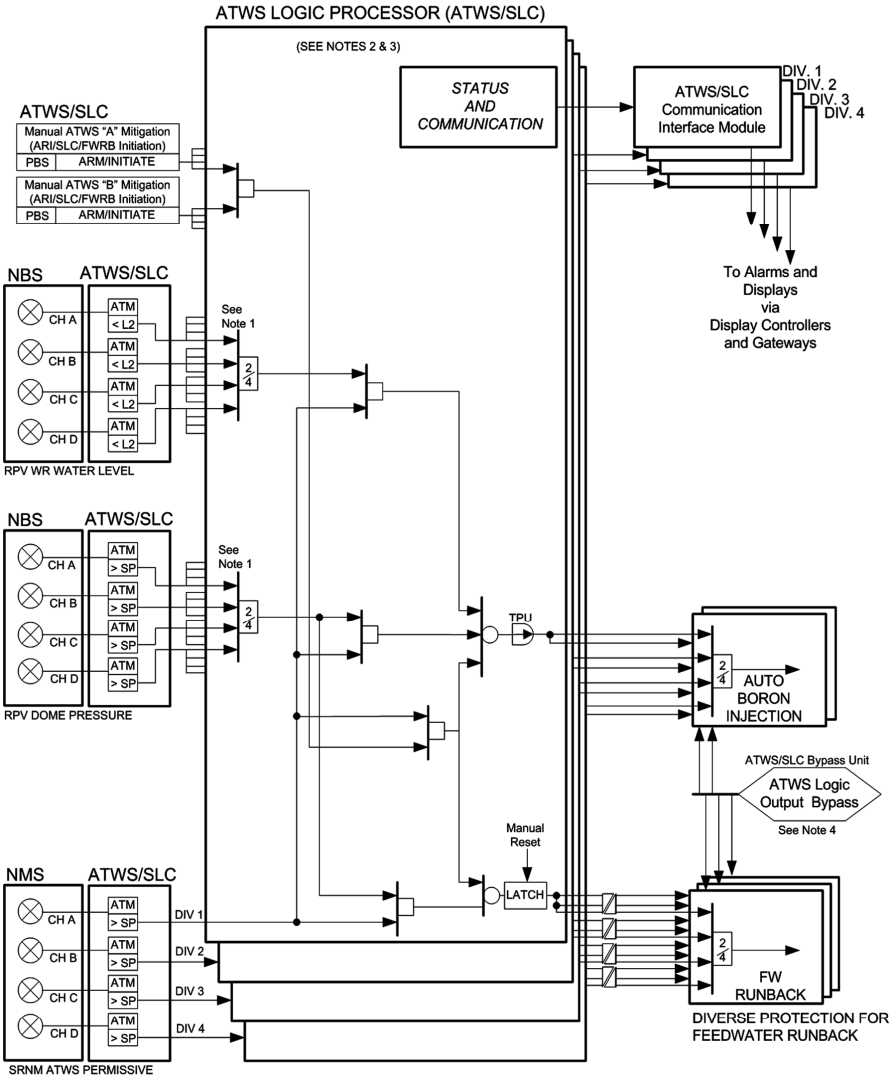

NOTES:
1. DIVISION-OF-SENSORS BYPASS INPUTS AND LOGIC NOT SHOWN.

2. THE ATWS LOGIC PROCESSOR SHALL INCLUDE DIVISION-OF-SENSORS BYPASS EXCLUSIONARY LOGIC THAT RESULTS IN A "NO BYPASS" CONDITION FOR ALL DIVISIONS IF TWO OR MORE BYPASS INPUTS ARE RECEIVED.

3. THE ATWS LOGIC PROCESSOR SHALL INCLUDE DIVISION-OF-SENSORS BYPASS LOGIC THAT BYPASSES TRIP INPUTS FROM ALL SENSORS IN ONE DIVISION WHEN DIVISION-OF-SENSORS FOR THAT DIVISION IS PRESENT.

4. ATWS OUTPUT BYPASS LOGIC NOT SHOWN

Figure 7.8-4 Diverse ESF Triple Redundant Logic

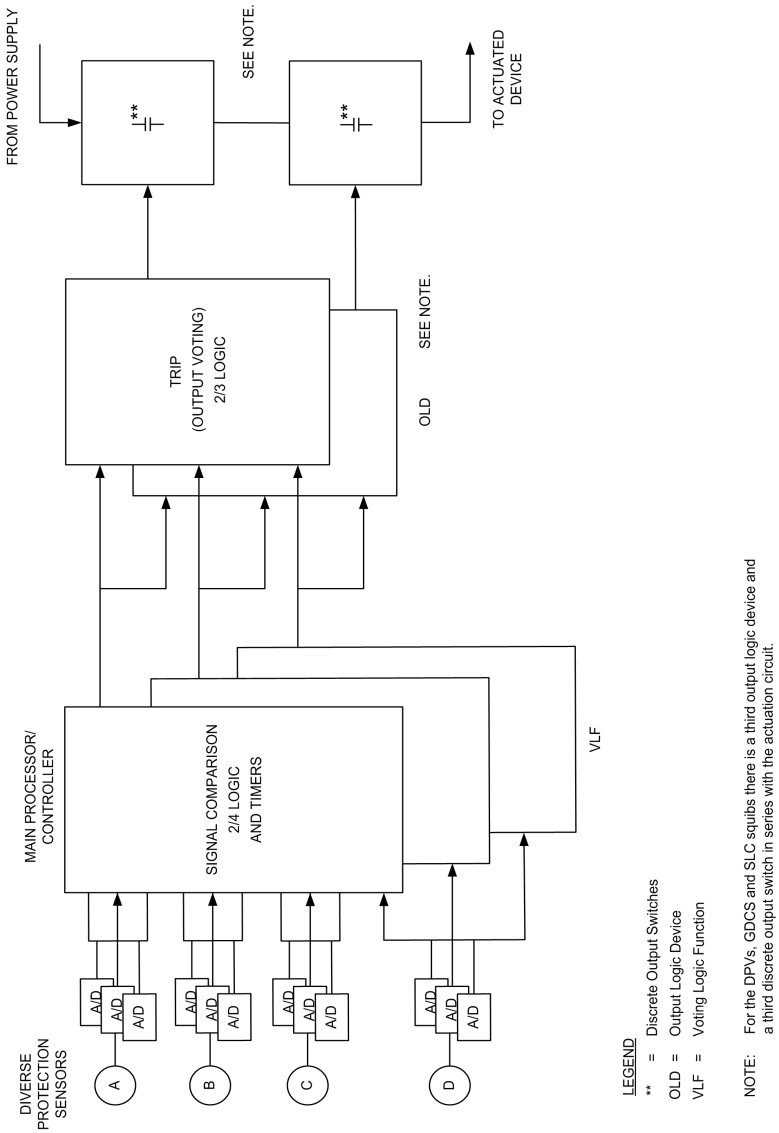

7.9 (Deleted)

Appendix 7A (Deleted)

Appendix 7B Software Development

7B.1 Software Development

The safety-related Distributed Control and Information Systems (Q-DCIS) comprise the platforms that are defined in Table 7B-1. The nonsafety-related Distributed Control and Information Systems (N-DCIS) comprise the network segments that are defined in Table 7B-2. These platforms and network segments comprise systems of integrated software and hardware elements. Software projects are developed for the various platforms and network segments.

A Software Project is defined as a programmatically and technically coherent scope for a collection, grouping or packaging of requirements that follow a structured development lifecycle to produce the desired deliverables. This structured software engineering process includes an overlapping phased execution approach. Each phase of the software development lifecycle is exited by means of a formal review activity to ensure adherence to the project requirements. The scope of a software project is also referred to as a software package. A software package is a collection of components, modules, sub-programs and data objects as well as applicable hardware and supporting documentation that are brought together to form a single application or solution for an instrument or collection of functions within a broader system. The objective is to ensure that the software package represents a completed, integrated set of deliverables that meet the system software requirements and the associated project requirements (e.g.; process compliance, configuration management, documentation, industry standards, regulatory).

Project software plans control the development of each platform and network segment using a software life cycle process. The ESBWR Software Management Program Manual (Reference 7B.3-1) and ESBWR Software Quality Assurance Program Manual (Reference 7B.3-2) provide the bases for developing project software plans and the software life cycle model that will control the software development process. The ESBWR Cyber Security Program Plan (reference 7B.3-3) provides the bases for the project Cyber Security Programs. These software plans and programs comprise the data that define the platform and network segment design processes.

A software life cycle phase baseline review process regulates the passage of the platform and network segment design from one software life cycle phase to the next. A software life cycle phase baseline review record comprises a software life cycle phase requirements traceability analysis report, a software life cycle phase software safety analysis report, a software life cycle phase verification and validation report, a software life cycle phase cyber security assessment report, a software life cycle configuration management assessment, and a software life cycle phase baseline review team report. Baseline review records exist at the end of each software life cycle phase and conclude that the design process has been followed and that the design elements are adequate to pass through to the next software life cycle phase. The summary baseline review record provides assurance that the project software plans are implemented and producing adequate results at the

end of each software life cycle phase. The platform and network segment baseline review record documentation will support closure of ITAAC including Design Acceptance Criteria ITAAC.

A multiple-phase test process, using a series of overlapping tests, confirms that the as-built platform and network segment perform as designed. The Factory Acceptance Test confirms that each part of a platform and network segment performs as designed. The Site Acceptance Test confirms that the platforms and network segments are capable of operating as shown in the Factory Acceptance Test and operate as designed as an integrated ESBWR instrumentation and control system.

In support of the above described software development process, the following software design commitments are made:

1. The platform software plans, network segment software plans, and cyber security programs for each platform software project and network segment software project are developed in accordance with the following design acceptance criteria shown for each software development software life cycle phase plan and cyber security program:
   a. Software Management Plan (SMP):
      - *Establish project management activities, which include but are not limited to the following activities:*
        - *Project planning and scheduling*
        - *Project monitoring and control*
        - *Project execution*
        - *Post delivery and closeout*
      - *Define the organization and responsibilities of individuals or groups involved in the various design and V&V activities*
      - *Define risk management process*
      - *Establish the methods and tools for project management*
      - *Define financial (budget) responsibilities and controls*
      - *Define security (including cyber security) requirements*
      - *Define training requirements and qualification of project personnel*
   b. Software Development Plan (SDP)
      - *Describes the plan for technical project development of the I&C software which performs the monitoring, control, and protection functions for all modes of plant operation*

- *Describes the software development process for each phase of the software product's software life cycle process, i.e., Planning, Requirements, Design, Implementation, Test, Installation, Operations & Maintenance, and Retirement*
- *Establishes the standards, methods, tools, and procedures for the software design and development process*
- *Defines the activities performed for each phase of the software development*
- *Defines how requirements are traced to lower levels of the software life cycle phases from planning phase to test phase*
- *Specifies how the safety-related requirements are documented, evaluated, reviewed, verified, and tested during the design process to minimize unknown, unreliable, and abnormal conditions*
- *Describes the organization and responsibilities of individuals or groups involved in the various V&V and review activities*
- *Addresses metrics that include error tracking, cyber security tracking, and resolution*

c. Software Integration Plan

- *Describes the process for integrating the various software modules together to form single programs*
- *Describes the process for integrating the software module integration result with the hardware and instrumentation*
- *Describes the process for validating the resulting integrated product*
- *Describes the organization and responsibilities of individuals or groups involved in the test activities*
- *Describes software test management (e.g., scheduling, resource planning, security, risks and contingency planning, anomaly, problem reporting, and training needs)*
- *Describes the methods for software testing*
- *Provides the requirements and guidelines necessary to prepare, execute, and document software tests*
- *Defines required software test documentation*
- *Defines measurements and metrics for error tracking and resolution, and assesses the success or failure of the software integration and software test effort*

d. Software Installation Plan (SIP)

- *Describes the software installation process and activities performed during the installation phase*
- *Defines the installation phase activities*

- *Describes the installation procedures*
- *Describes the software installation management. This includes, but is not limited to, scheduling, resource planning, security, risks and contingency planning, anomaly and problem reporting, and training needs*
- *Provides the requirements and guidelines necessary to prepare, execute, and document software installation*

e. Software Operation and Maintenance Plan

- *Defines requirements, methods, and considerations for problem reporting, disposition of change request, backup media maintenance and disaster recovery operations during the Operation and Maintenance Phase*
- *Addresses the activities required to support the licensee during the Operation and Maintenance phase*

f. Software Training Plan

- *Describes the software training activities to be carried out before and during the operation of software products for the plant*
- *Addresses management, implementation and resource characteristics*
- *Defines the requirements and methods used to develop the training program and manual*
- *Defines the training needs of appropriate plant staff, including operators, I&C engineers, and technicians*
- *Defines a general description of the training facilities*
- *Defines the organization supporting the training effort including interfaces and responsibilities*

g. Software Quality Assurance Plan (SQAP)

- *Defines the management organization, techniques, procedures, and methodologies used to assure the delivery of software meets specified requirements*
- *Assures that software development, evaluation, and acceptance standards are implemented, documented, and followed*
- *Assures that the results of software quality reviews and audits will be given to appropriate management within the scope of the SQAPM*
- *Assures that test results adhere to acceptance standards*

h. Software Safety Plan (SSP)

- *Establishes the processes and activities to ensure that the safety concerns of the software products are properly considered during the software development*

- *Describes the roles and responsibilities of the Software Safety Team*
- *Describes the Software Safety Analysis process*
- *Ensures that all system safety-critical requirements have been satisfied by the software life cycle phases*
- *Ensures that additional hazards have not been introduced by the work done during the software life cycle activity*

i. Software Verification & Validation Plan (SVVP)

- *Establishes the V&V tasks for the software designed and developed for software products*
- *Ensures that the developed software meets its specified requirements, performs its intended functions correctly, and does not perform any unintended function*
- *Ensures that the final software product meets the contract requirements, required industry and regulatory standards, and licensing commitments*
- *Ensures that the final software product is correct, complete, accurate, and traceable to requirements specified in the design documents and outputs*

j. Software Configuration Management Plan (SCMP)

- *Establishes the Software Configuration Management activities during the design and development of the software products*
- *Describes the individual with the overall responsibility and authority for the software configuration management and organizations responsible for supporting the software configuration management activities*
- *Defines the software configuration management tasks, including methods, timing, and responsibility for the implementation of design control and design change control*
- *Identifies the tools, procedures, and individuals needed to execute or support each software configuration management task*
- *Identifies the software configuration management required schedule and coordination with the design activities and the Quality tasks described in the SQAPM*

k. Software Test Plan (STP)

- *Prescribes the scope, approach, resources, and schedule of the testing activities associated with the software development process*
- *Identifies the items being tested, the features to be tested, the testing tasks to be performed, the personnel responsible for each task, and the risks associated with this plan*
- *Defines the purpose, format and content for each test document*

l. Cyber Security Program

- *Provides guidance for developing the ESBWR Cyber Security Program Plan for critical digital assets*
- *Provides a framework for managing a cyber security program that includes description of roles and responsibilities, development of policies and procedures, development of cyber security defensive model, evaluation of third party networks, development of a training and awareness program, development of contingency and disaster recovery plans, performance of periodic threat and vulnerability reviews, and preparation of the cyber security assessment report*
- *Provides specific guidance for the implementation of cyber security requirements throughout the life cycle phases of software development*
- *Addresses cyber security quality assurance requirements*
- *Provides requirements for an incident response and recovery plan*

2. Implementation of the software projects for each platform and network segment in accordance with the approved software plans ensures that adequate software products are produced at the conclusion of each software life cycle phase baseline as documented by the following software life cycle phase Summary Baseline Review Records.

   a. *Planning Phase Summary baseline review records are produced for each hardware and software platform or network segment in accordance with the criteria described in the SMPM, Section 5.6.5 (Reference 7B.3-1)*

   b. *Requirements Phase Summary baseline review records are produced for each hardware and software platform or network segment in accordance with the criteria described in the SMPM, Section 5.7.12 (Reference 7B.3-1)*

   c. *Design Phase Summary baseline review records are produced for each hardware and software platform or network segment in accordance with the criteria described in the SMPM, Section 5.8.3.13 (Reference 7B.3-1)*

   d. *Implementation Phase Summary baseline review records are produced for each hardware and software platform or network segment in accordance with the criteria described in the SMPM, Section 5.9.3.10 (Reference 7B.3-1)*

   e. *Test Phase Summary baseline review records are produced for each hardware and software platform or network segment in accordance with the criteria described in the SMPM, Section 5.10.9 (Reference 7B.3-1)*

3. A multiple-phase test process performed as part of the installation phase will be used to confirm that each as-built platform or network segment performs in accordance with its defined criteria.

Installation Phase Summary baseline review records are produced for each software project in accordance with the criteria described in the SMPM, Subsection 5.11.10 (Reference 7B.3-1). The Installation Phase baseline review will assess:

- *The results summary report for the Factory Acceptance Test to ensure the Factory Acceptance Test was performed in accordance with the criteria described in the SQAPM, Sections 7.4 and 7.5 (Reference 7B.3-2), and confirms that each part of the as-built software project performs as designed. The Factory Acceptance Test is documented in two parts in accordance with the SQAPM, Section 7.7 (Reference 7B.3-2), such that, a Factory Acceptance Test and a cyber security Factory Acceptance Test will be performed on each platform or network segment.*
- *The Site Acceptance Test and will confirm, using overlapping tests during Site Acceptance Test, that the as-built platforms or network segments, when integrated, are capable of operating as designed as a complete ESBWR instrumentation and control system with sensors and actuators.*

Digital computer-based plant process control and monitoring systems, components, devices, and equipment are those which contain software (including firmware). Plant process control and monitoring software is defined as:

- Software (including firmware) that controls, monitors, interfaces, or communicates with real time operating digital computer-based plant process control and monitoring devices, equipment and systems located within a nuclear power plant. This also includes the software within any other digital equipment of a nuclear power plant, the changes to which after release would constitute a design change.

Other digital computer-based systems that are not plant process control and monitoring systems, components, devices and equipment may contain software (including firmware) but are not within the scope of the software plans. These are:

- Software (including firmware) within plant security equipment (e.g., perimeter intrusion detection processors, CCTV processors, security access computer and intelligent multiplexers, hand geometry and card reader processors, infra-red detection processors, etc.) subject to the requirements of 10 CFR 73.55.
- Communications software (including firmware) such as telephone private and branch exchange switches as well as micro-processor based public address software.
- Software (including firmware) that is not within the scope of the certified design includes but is not limited to; Health Physics radiological monitoring and access control software, Chemistry laboratory equipment and radiological effluents tracking software, Emergency Planning software for dose assessment or other accident response functions, etc.

The scope of the project software plans listed in Section 7B.3 References includes plant process control and monitoring software that is within the scope of the certified design. In particular, the scope of the project software plans includes all plant process control and monitoring software that is safety related or that is designated as RTNSS.

7B.2 Treatment of Systems Designated as RTNSS

Table 19A-2 defines the structures, systems, and components (SSC) that perform significant safety, special event, or post-accident recovery functions that will be subject to additional regulatory oversight under the RTNSS program. The N-DCIS network segment SSC that perform these RTNSS functions are identified Table 7B-2. RTNSS SSC are subject to Maintenance Rule (10 CFR 50.65), the Availability Control Manual (ACM; Chapter 19, Appendix ACM), and verification by the inspections, tests, analyses, and acceptance criteria (ITAAC) in Tier 1. RTNSS SSC follow existing design processes. Thus, the software development process does not distinguish between RTNSS and non-RTNSS SSC. RTNSS SSC are developed using the software classification assigned to the network segment. The SQAPM (Reference 7B.3-2) describes software classification.

7B.3 References

7B.3-1 GE Hitachi Nuclear Energy, "ESBWR - Software Management Program Manual," NEDE-33226P, Class III (Proprietary), Revision 5, February 2010, and NEDO-33226, Class I (Non-proprietary), Revision 5, February 2010.

7B.3-2 GE Hitachi Nuclear Energy, "ESBWR - Software Quality Assurance Program Manual," NEDE-33245P, Class III (Proprietary), Revision 5, February 2010, and NEDO-33245, Class I (Non-proprietary), Revision 5, February 2010.

7B.3-3 GE Hitachi Nuclear Energy, "ESBWR Cyber Security Program Plan," NEDE-33295P, Class III (Proprietary), Revision 2, September 2010, and NEDO-33295, Class I (Non-proprietary), Revision 2, September 2010.

7B.3-4 GE Hitachi Nuclear Energy, "ESBWR Man-Machine Interface System And Human Factors Engineering Implementation Plan," NEDE-33217P, Class III (Proprietary), Revision 6, February 2010, and NEDO-33217, Class I (Non-Proprietary), Revision 6, February 2010.

Table 7B-1 Q-DCIS Platforms

Platform	Software Project
Reactor Trip & Isolation System Function Neutron Monitoring System (RTIF-NMS)	RTIF
	NMS
Safety System Logic & Control / Engineered Safety Features (SSLC/ESF) Platform	SSLC/ESF
Independent Control Platform (ICP)	VBIF
	ATWS/SLC
	HP CRD Isolation Bypass Function
	ICS DPV Isolation Function

Table 7B-2 N-DCIS Network Segments (1)

GENE (DPS)
PIP A and PIP B
BOP
PCF

Note:

1. Network segments are described in Subsection 7.1.4.8. RTNSS components of the network segments are identified in parentheses.

Table 7B-3

(Deleted)

Table 7B-4

(Deleted)

Table 7B-5

(Deleted)

Table 7B-6

(Deleted)

Table 7B-7

(Deleted)

Table 7B-8

(Deleted)