# Appendix 3G DESIGN DETAILS AND EVALUATION RESULTS OF SEISMIC CATEGORY I STRUCTURES

*This appendix presents the structural design and analysis for the Reactor Building (RB), Control Building (CB), Fuel Building (FB) and Firewater Service Complex (FWSC) of the ESBWR Standard Plant. It addresses all applicable items included in Appendix C to United States Nuclear Regulatory Commission (NRC) Standard Review Plan, NUREG-0800, Subsection 3.8.4. Drawings depicted in the Design Control Document (DCD) are not used for construction. Construction drawings meet the technical licensing commitments made in the DCD but are issued under different contractual/industrial rules than the DCD drawings and reflect detailed design configuration. The final design details will meet the structural acceptance criteria presented in Section 3.8 and in Tier 1 ITAACs in Tables 2.16.5-2, 2.16.6-2, and 2.16.7-2. The critical dimensions and acceptable tolerances are presented in Section 3G.6.*

## 3G.1 REACTOR BUILDING

*The RB encloses the concrete containment and its internal systems, structures, and components. Located above the concrete containment in the RB are the Isolation Condenser/Passive Containment Cooling System (IC/PCCS) pools (including expansion pools), the buffer pool, which is also used to store the dryer, and the equipment storage pool, which is also used to store the chimney partitions and the separator.*

### 3G.1.1 Objective and Scope

*The objective of this subsection is to document the structural design details, inputs and analytical results from the analysis of the ESBWR main building structures encased in the RB. The scope includes the design and analysis of the structure for normal, severe environmental, extreme environmental, and abnormal loads.*

### 3G.1.2 Conclusions

*The following are the major summary conclusions on the design and analysis of the RB, the concrete containment and the containment internal structures.*

- *Based on the results of finite element analyses performed in accordance with the design conditions identified in Subsections 3G.1.3 and 3G.1.5, stresses and/or strains in concrete, reinforcement, liner and containment internal structures are less than the allowable stresses and/or strains per the applicable regulations, codes or standards listed in Section 3.8.*
- *The factors of safety against floatation, sliding, and overturning of the structure under various loading combinations are higher than the required minimum.*
- *The thickness of the roof slabs and exterior walls are more than the minimum required to preclude penetration, perforation or spalling resulting from impact of design basis tornado missiles.*

### 3G.1.3 Structural Description

#### 3G.1.3.1 Description of the Reactor Building

##### 3G.1.3.1.1 Reactor Building Structure

The RB structure and the containment structure share the same wall structure which encloses the Gravity-Driven Cooling System (GDCS) pools and the Suppression pool. The RB structure consists of the following areas that are not part of the containment structure.

- RB super structure at and above the refueling floor, up to the support for the bridge crane, including the roof, is made of reinforced concrete floors and walls. Roof trusses and their supporting columns are made of structural steel.
- IC/PCCS pools (including expansion pools), the equipment storage pool, the reactor well and the buffer pool.
- Rooms at several elevation levels outside the containment but attaching to the containment structure.
- The main steam tunnel that consists of reinforced concrete walls and floor.

The key dimensions of the RB are summarized in Table 3.8-8. Figures 3G.1-1 through 3G.1-7 show the configurations of the RB.

The FB is integrated with the RB in the ESBWR standard plant. The RB and FB share a common wall between them and a large common basemat. The summary of the FB design is described in Section 3G.3.

##### 3G.1.3.1.2 Containment and Containment Structure

The containment is a reinforced concrete containment vessel (RCCV), which encloses the reactor pressure vessel (RPV) and its related systems and components. The containment is divided into a drywell region and a wetwell region with an interconnecting vent system.

The key dimensions of the RCCV are summarized in Table 3.8-1. Figure 3.8-1. shows the configuration of the RCCV.

The containment structure boundary consists of the containment top slab with removable drywell head, the containment cylindrical wall that is also the outer wall of the suppression pool, the suppression pool floor slab, the RPV pedestal that encloses the volume under the RPV, and the basemat. The concrete containment is lined with a steel liner for leak-tightness. The containment cylindrical outer wall extends below the suppression pool floor slab to the basemat. This extension is not part of the containment pressure boundary, however, it supports the upper containment cylinder. The reinforced concrete basemat foundation supports the entire containment system, which includes the RPV pedestal, and extends to support the RB surrounding the containment. The outline drawings are shown in Figures 3G.1-1 through 3G.1-7.

*3G.1.3.1.3 Reactor Building Structure/Containment Structure Connections*

*The RCCV and the RB structure are integrated by the IC/PCCS pool girders at the top of the containment and by floor slabs at elevations that are defined as part of the RB structure and the basemat. The IC/PCCS pool girders are deep reinforced concrete girders, and they are integrated with the containment top slab and with RB walls.*

*3G.1.3.1.4 Containment Internal Structures*

*The containment internal structures consist of the diaphragm floor slab, vent wall, GDCS pool walls, reactor shield wall (RSW), and the RPV support bracket. These structures are shown in the general arrangement drawings in this appendix.*

*The diaphragm floor slab acts as a barrier between the drywell and the wetwell. The diaphragm floor slab is supported on the reinforced concrete containment wall at its outer periphery and on the vent wall at its inner periphery. The diaphragm floor slab is a concrete-filled steel structure. The space between the floor slab top and bottom plates is filled with concrete. The slab is supported by a system of radial beams spaced evenly all around and spanning between the vent wall structure and the reinforced concrete containment wall.*

*The vent wall structure is also a concrete–filled steel design consisting of two concentric carbon steel cylinders connected together by vertical web plates evenly spaced all around. The vent wall structure is anchored at the bottom into the RPV pedestal and is restrained at the top by the diaphragm floor slab. The cylindrical annulus carries 12 vent pipes and 12 safety relief valve (SRV) downcomer pipes with sleeves, from the drywell into the suppression pool. The space in the cylindrical annulus is filled with concrete.*

*There are three GDCS pools supported on top of the diaphragm floor slab. The pools on one side are contained by the reinforced concrete containment wall and on the other side by structural steel walls.*

*The RSW is a thick steel cylindrical structure that surrounds the RPV. It is supported by the RPV support brackets and the reactor pedestal. The function of the RSW is to attenuate radiation emanating from the RPV. In addition, the RSW provides structural support for the RPV stabilizer, the RPV insulation and miscellaneous equipment, piping and commodities. Openings are provided in the RSW to permit the routing of necessary piping to the RPV and to permit in-service inspection of the RPV and piping.*

*3G.1.4 Analytical Models*

*3G.1.4.1 Structural Models*

*The RB and the RCCV including its internal structures are analyzed as one integrated structure utilizing the finite element computer program NASTRAN. The finite element model consists of quadrilateral, triangular, and beam elements. The quadrilateral and triangular elements are used to*

*represent the slabs and walls. Beam elements are used to represent columns and beams. The model is shown in Figures 3G.1-8 to 3G.1-18. The buffer pool gate wall modeled in Figure 3G.1-8 is wider than the current configuration. It is updated in a separate analysis for the most critical loadings of accident pressure and accident temperature. The resulting stresses are taken into account in the design of the RCCV top slab and the pool gate walls.*

*As shown in Figure 3G.1-8, the FB is also included in the model, because the FB is integrated with the RB. The model includes the whole (360°) portion of the RB including the RCCV and FB taking the application of nonaxisymmetrical loads and the asymmetric layout of the FB structure into consideration.*

*Liner plates of various thicknesses as shown in Figure 3G.1-48 are included in the model at locations of the pressure boundary of the containment. The liner plate nodal points are connected to the containment nodal points by rigid beams. The liner plate elements are shown in Figure 3G.1-18. Pressure loads in the containment are applied on the liner plate.*

*The vent wall and the diaphragm floor are concrete-filled structures consisting of steel plates and concrete. The infill concrete is neglected in analysis model conservatively. Steel plates including connecting rib plates and girders are modeled by shell elements. The GDCS pool, the RSW and the RPV support brackets are also included in the analysis model. These structures are modeled by shell elements, except the GDCS pool beams which are modeled by beam elements. The analysis model of these structures is shown in Figure 3G.1-17.. For the GDCS pool, the detail stress evaluation is performed using a local model.*

*The following major penetrations in the concrete containment are included in the model in order to take local reduction of the wall stiffness into consideration. The penetrations in the model are shown in Figures 3G.1-10 and 3G.1-11.*

- *upper drywell equipment and personnel hatches*
- *lower drywell equipment and personnel hatches*
- *wetwell access hatch*
- *main steam and feedwater pipe penetrations*

*Small penetrations in the containment are not modeled because their effects on the wall stiffness are negligible.*

*The containment around an opening is analyzed utilizing a local finite element model. Figure 3G.1-66. shows the detail of the local finite element model of the RCCV wall around the upper drywell personnel airlock opening. The model is composed of the concrete wall, the steel liner plate and the steel opening sleeve. The concrete wall and steel liner plate are modeled by shell elements, and the opening sleeve is modeled by rod elements. Because the analysis model is a local finite element model of the RCCV, the enforced displacements calculated from the RB/FB*

*global finite element model analysis results are applied at the periphery of the model and at the connections with the surrounding slab and wall.*

*The nodal points are defined by a right hand Cartesian coordinate system X, Y, Z. This system, called the global coordinate system, has its origin located at the center of the containment at the bottom of the RPV, i.e., EL 0. The positive X axis is parallel with the IC/PCCS pool girder in the 180° direction of the containment; the Y axis is perpendicular to the IC/PCCS pool girder in the 90° direction of the containment; the Z axis is vertical upward. This coordinate system is shown in Figure 3G.1-8.*

#### *3G.1.4.2 Foundation Models*

*The foundation soil is represented by soil springs. The spring constants for rocking and translations are determined based on the following soil parameters which correspond to the Soft Site conditions described in Appendix 3A.*

- *Shear wave velocity: 300 m/s (1000 ft/s)*
- *Unit weight: 0.0196 MN/m$^3$ (125 lbf/ft$^3$)*
- *Shear modulus: 180 MN/m$^2$ (26110 psi)*
- *Poisson's Ratio: 0.478*

*Soil springs are attached to the bottom of the foundation mat, and the constraints by side soil are not included in the model. The values of the soil springs used in the analysis are shown in Table 3G.1-1. The springs have perfectly elastic stiffness.*

*These spring values are multiplied by the foundation mat nodal point tributary areas to compute the spring constants assigned to the base slab nodal points.*

### *3G.1.5 Structural Analysis and Design*

#### *3G.1.5.1 Site Design Parameters*

*The key site design parameters are located in Table 3G.1-2.*

#### *3G.1.5.2 Design Loads, Load Combinations, and Material Properties*

##### *3G.1.5.2.1 Design Loads*

###### 3G.1.5.2.1.1 *Dead Load (D) and Live Load (L and $L_O$)*

*The weights of structures are evaluated using the following unit weights.*

- *reinforced concrete: 23.5 kN/m$^3$ (150 lbf/ft$^3$)*
- *plain concrete: 22.5 kN/m$^3$ (143 lbf/ft$^3$)*
- *steel: 77.0 kN/m$^3$ (490 lbf/ft$^3$)*

*Weights of major equipment, miscellaneous structures, piping, and commodities are summarized in Tables 3G.1-3 through 3G.1-5.*

*Live loads on the RB floor and roof slabs are described in Subsection 3.8.4.3.1.1.*

*For the computation of global seismic loads, the value of floor live load is limited to the expected live load, $L_o$, during normal plant operation. The values of $L_o$ are 25% of the above full floor live loads, L, when used in combination with seismic and dead loads as described in Subsection 3.8.4.3.1.1.*

*3G.1.5.2.1.2 Snow and Rain Load*

*The snow load and rain load applied to the roof slabs is taken from Table 3G.1-2.*

*3G.1.5.2.1.3 Lateral Soil Pressure at Rest*

*The lateral soil pressure at rest is applied to external walls below grade and is based on soil properties given in Table 3G.1-2. Pressures to be applied to the walls are provided in Figure 3G.1-19.*

*3G.1.5.2.1.4 Wind Load (W)*

*The wind load is applied to the roof slabs and external walls above grade and is based on basic wind speed given in Table 3G.1-2.*

*3G.1.5.2.1.5 Tornado Load (Wt)*

*The tornado load is applied to the roof slabs and external walls above grade and its characteristics are given in Table 3G.1-2. The tornado load, Wt, is further defined by the following combinations:*

$W_t = W_w$

$W_t = W_p$

$W_t = W_m$

$W_t = W_w + 0.5W_p$

$W_t = W_w + W_m$

$W_t = W_w + 0.5W_p + W_m$

*where,*

$W_t$ = *Total Tornado Load*

$W_w$ = *Tornado Wind Load*

$W_p$ = *Tornado Differential Pressure Load*

$W_m$ = *Tornado Missile Load*

*3G.1.5.2.1.6 Thermal Loads*

*Thermal loads are evaluated for the normal operating conditions and abnormal (Loss-of-Coolant-Accident [LOCA]) conditions. Figure 3G.1-20. shows the section location for temperature distributions for various structural elements, and Table 3G.1-6 shows the magnitude of equivalent linear temperature distribution.*

*The evaluation method of temperature effect on the concrete design is based on ACI 349-01 Commentary Figure RA.1.*

*Two cases, winter and summer, are considered in the analysis.*

*Stress-free temperature is 15.5°C (60°F).*

*The structural evaluation for TRACG calculated LOCA temperatures is described in Section 3G.5.*

*3G.1.5.2.1.7 Pressure Loads*

*Table 3G.1-7 shows the pressure loads applied to the RCCV during normal operation, structural integrity test, and the LOCA. Pressure loads in the IC/PCCS pools are provided in Table 3G.1-8.*

*3G.1.5.2.1.8 Condensation Oscillation and Chugging Loads*

*The condensation oscillation (CO) and chugging pressure loads along with Dynamic Load Factors (DLF) are provided in Figures 3G.1-21 and 3G.1-22. The adequacy of DLF equal to 2.0 is confirmed by dynamic response analysis.*

*3G.1.5.2.1.9 Safety Relief Valve Loads*

*The SRV loads along with DLF are provided in Figure 3G.1-23.. The adequacy of DLF equal to 2.0 is confirmed by dynamic response analysis.*

*3G.1.5.2.1.10 Steam Tunnel Subcompartment Pressure*

*The design pressure in the RB main steam tunnel to account for a main steamline break is 76.0 kPaG (11.0 psig). A conservative pressurization analysis shows that the peak pressure is approximately one-third of this design pressure. Thermal loads need not be included due to short duration of the tunnel pressurization.*

*3G.1.5.2.1.11 Subcompartment Pressure in Other Compartments*

*For ESBWR, the Reactor Water Cleanup/Shutdown Cooling (RWCU/SDC) system is considered high energy during normal operation. The maximum design pressure inside the affected subcompartments from the high energy line break of the system is 36 kPaG (5.22 psig). Thermal loads need not be included due to short duration of subcompartment pressurization.*

*3G.1.5.2.1.12 Annulus Pressurization Loads*

*The annulus pressurization loads due to feedwater and reactor water cleanup breaks are considered. Annulus pressurization loads contain pressure load and associated jet forces and pipe whip restraint loads.*

*3G.1.5.2.1.13 Design Seismic Loads*

*The design seismic loads are obtained by soil–structure interaction analyses, which are described in Appendix 3A. The seismic loads used for design are as follows:*

- *Figure 3G.1-24.: design seismic shears and moments for RB and FB walls*
- *Figure 3G.1-25.: design seismic shears and moments for RCCV*
- *Figure 3G.1-26.: design seismic shears and moments for RPV Pedestal and Vent Wall*
- *Table 3G.1-9: maximum vertical acceleration*

*These seismic loads are the same or very close to the Appendix 3A loads except for the vent wall and the RPV pedestal. The seismic loads for the vent wall in Table 3A.9-1c are higher than those in Figure 3G.1-26. considered in the stress analysis. Table 3A.9-1c seismic loads at the vent wall base are about 38%, 30%, and 71% higher for the shear, moment and torsion, respectively. The largest incremental shear, moment and torsion forces over the design forces are 11 MN, 118 MN-m and 42 MN-m, respectively. The resulting incremental stresses computed as a beam section are 12 MPa bending and 12 MPa shear. They are about 4% and 7% of the highest calculated design bending and shear stresses, respectively, for the governing abnormal/extreme load combination summarized in Table 3G.1-39. The ratio of the total stress (design plus incremental) to the code allowable is 0.7 for bending and 0.76 for shear. Therefore, the higher seismic loads have no impact on the vent wall design. With regard to the RPV pedestal, the seismic bending moments in Table 3A.9-1c are 12.5% higher at most along the height than those in Figure 3G.1-26. considered in the stress analysis. The RPV pedestal stresses summarized in Tables 3G.1-31 and 3G.1-32 for the governing load combinations have design margins more than 15%. Consequently, even if the combined stresses are conservatively increased by 12.5%, the same amount as the seismic load increase, the resulting stresses do not exceed the allowable stress. Therefore, the higher seismic loads have no impact on the RPV pedestal design.*

*The seismic loads are composed of one vertical and two perpendicular horizontal components. The effects of the three components are combined based on the square root of the sum of the squares (SRSS) method as described in Subsection 3.8.1.3.6.*

*Seismic lateral soil pressure for wall design is provided in Figure 3G.1-27. using the envelope pressure of the elastic procedure described in ASCE 4-98 Subsection 3.5.3.2 and SASSI results as described in Subsection 3A.8.8.*

*Seismic member forces for each section are obtained directly from the NASTRAN analysis using these seismic input loads.*

#### 3G.1.5.2.2 Load Combinations and Acceptance Criteria

Load combinations and acceptance criteria for the various elements of the RB complex are discussed on the following subsections.

##### 3G.1.5.2.2.1 Reinforced Concrete Containment Vessel

Table 3.8-2 gives a detailed list of various service and factored load combinations with acceptance criteria per ASME B&PV Code, Section III Division 2. Based on previous experience, critical load combinations are selected for the RCCV design. They are mainly combinations including LOCA loads and seismic loads as shown in Table 3G.1-10. The acceptance criteria for the selected combinations are also included in Table 3G.1-10.

##### 3G.1.5.2.2.2 Steel Containment Components

Table 3.8-4 gives a detailed list of various load combinations with acceptance criteria per ASME Section III Division 1, Subsection NE. For the drywell head, the loads of W, W', $R_o$, $R_a$ and Y are not direct loads and their indirect effects through the supporting RCCV top slab are negligible.

##### 3G.1.5.2.2.3 Containment Internal Structures

Table 3.8-7 gives a detailed list of various load combinations with acceptance criteria per AISC N690-94.

##### 3G.1.5.2.2.4 Reactor Building Concrete Structures Including Pool Girders

Load combinations and acceptance criteria for the RB concrete structures are described in Subsections 3.8.4.3.1.2 and 3.8.4.5.1, respectively. Based on previous experience, critical load combinations are selected for the RB design. They are mainly combinations including LOCA loads and seismic loads as shown in Table 3G.1-11. The acceptance criteria for the selected combinations are also included in Table 3G.1-11.

#### 3G.1.5.2.3 Material Properties

##### 3G.1.5.2.3.1 Concrete

Properties of concrete used for the design analyses are shown in Table 3G.1-12.

Concrete has a tendency to change properties when subjected to elevated temperatures. For the ESBWR design, reduction of concrete strength due to high temperature is determined based upon the average value of the following upper bound and lower bound equations excerpted from Reference 3G.1-1.

- Lower bound reduction factor
  - $\phi = 1.0 - 0.0030\ (T-21.1)$ $\quad 21.1°C\ (70°F) \leq T \leq 121.1°C\ (250°F)$
  - $\phi = 0.70 - 0.00083\ (T-121.1)$ $\quad 121.1°C\ (250°F) \leq T$
- Upper bound reduction factor

- $\phi = 1.0$ $T \leq 260.0°C$ (500°F)
- $\phi = 1.0 - 0.00081\ (T-260.0)$ $260.0°C$ (500°F) $\leq T$

*Young's modulus for concrete is also determined based upon the average value of the following upper bound and lower bound equations excerpted from Reference 3G.1-1.*

- *Lower bound reduction factor*
  - $\phi = 1.0 - 0.0069\ (T-21.1)$ $21.1°C$ (70°F) $\leq T \leq 93.3°C$ (200°F)
  - $\phi = 0.50 - 0.0009\ (T-93.3)$ $93.3°C$ (200°F) $\leq T$
- *Upper bound reduction factor*
  - $\phi = 1.0 - 0.00056\ (T-21.1)$ $21.1°C$ (70°F) $\leq T \leq 204.4°C$ (400°F)
  - $\phi = 0.90 - 0.0015\ (T-204.4)$ $204.4°C$ (400°F) $\leq T$

*The design temperature of the drywell is 171°C (340°F) as shown in Table 1.3-3, and it satisfies the concrete temperature limit, 177°C (350°F), for accident or short term period specified in ASME Section III, Subsection CC-3440.*

#### 3G.1.5.2.3.2 Reinforcing Steel

*Reinforcing steel is deformed billet steel conforming to ASTM A-615 grade 60. Minimum yield strength, $F_y$, is 413.6 MPa (60 ksi).*

*Reinforcing steel also has tendency to decrease in strength at elevated temperatures. The reduction of reinforcing steel strength is based upon the following equation excerpted from Reference 3G.1-1.*

- *Reduction Factor*
  - $\phi = 1.0 - 0.000873\ (T-21.1)$ $21.1°C$ (70°F) $\leq T \leq 204.4°C$ (400°F)

#### 3G.1.5.2.3.3 Structural Steel

*Properties of structural steel used for the design analyses are included in Table 3G.1-12.*

### 3G.1.5.3 Stability Requirements

*The RB foundation has the following safety factors against overturning and sliding. Because the impact on the stability by seismic load is larger than wind and tornado, the load combinations for W and $W_t$, which are shown in Table 3.8-14, are excluded.*

| Load Combination | Overturning | Sliding | Floatation |
|---|---|---|---|
| D + H + E' | 1.1 | 1.1 | |
| D + F' | | | 1.1 |

Where
D = Dead Load, F' = Buoyant forces of design basis flood
H = Lateral soil pressure, E' = Safe Shutdown Earthquake

### 3G.1.5.4 Structural Design Evaluation

The evaluation of the containment structure, the containment internal structures, and the RB structures is based on the results from the load combinations indicated in Subsection 3G.1.5.2.2.

Figure 3G.1-28. shows the location of the sections that are selected for evaluation of reinforced concrete structures. They are selected, in principle, from the center and both ends of walls and slabs, where it is reasonably expected that the critical stresses appear based on engineering experience and judgment. The computer program SSDP-2D is used for the evaluation of stresses in rebar and concrete. The input to SSDP-2D consists of rebar ratios, material properties, and element geometry at the section under consideration together with the forces and moments from the NASTRAN analysis, which are shown in Tables 3G.1-13 through 3G.1-21. Element forces and moments listed in the tables are defined with relation to the element coordinate system shown in Figure 3G.1-29.. Figures 3G.1-30 through 3G.1-38 indicate deformations of structures obtained by NASTRAN analyses for the loads corresponding to Tables 3G.1-13 through 3G.1-21.

Figure 3G.1-39. shows a flow chart for the structural analysis and design. Figures 3G.1-40 through 3G.1-47 and Figures 3G.1-67 through 3G.1-70 present the design drawings used for the evaluation of the containment and the RB structural design. Figures 3G.1-48 through 3G.1-50 show the design details of containment liner plate. Figures 3G.1-51 through 3G.1-54 show the design details of containment major penetrations. Figures 3G.1-55 through 3G.1-59 show the details of containment internal structures.

#### 3G.1.5.4.1 Containment Structure

Tables 3G.1-22 through 3G.1-26 show the resultant combined forces and moments in accordance with the selected load combinations listed in Table 3G.1-10. Table 3G.1-27 lists the sectional thicknesses and rebar ratios used in the evaluation. At each section, in general, three elements are analyzed at azimuth 0°, 90° and 135°.

Tables 3G.1-28 through 3G.1-32 show the rebar and concrete stresses at these sections for the representative elements. Tables 3G.1-33 and 3G.1-34 summarize evaluation results for transverse shear and tangential shear in accordance with ASME B&PV Code Section III, Division 2, Article CC-3520.

Table 3G.1-35 shows the maximum strains of containment liner plate. Table 3G.1-36 shows the stress summary of the drywell head.

Reference 3G.1-3 shows the stress summary of PCCS condenser and support.

##### 3G.1.5.4.1.1 Containment Wall Including RPV Pedestal

Sections 1 through 9 shown in Figure 3G.1-28. are considered critical sections for the containment wall including the RPV pedestal. Maximum stress in the meridional rebar is found to be 320.0 MPa (46.41 ksi) at Section 1 near the bottom of the RPV Pedestal due to load combination CV-11a, as shown in Table 3G.1-31. The maximum stress in the circumferential rebar is found to be 326.0 MPa

*(47.28 ksi), which occurs at Section 6, the top of the RCCV Wetwell due to load combination CV-11a, as shown in Table 3G.1-31. The maximum concrete stress is found to be 21.7 MPa (3.15 ksi), which occurs at Section 3 due to load combination CV-11b.*

*The maximum transverse shear stress is found to be 4.44 MPa (0.64 ksi) at Section 1 for the load combination CV-11b. The amounts of shear ties provided satisfy the required values at all sections, as indicated in Table 3G.1-33.*

*As for tangential shear, the maximum stress of 3.58 MPa (0.52 ksi) is found at Section 4, the bottom of the wetwell, due to the combination CV-11a. The value is less than the allowable tangential shear stress provided by orthogonal reinforcement, which is described in Table 3.8-3. The amounts of reinforcement provided satisfy the required values at all sections, as indicated in Table 3G.1-34.*

*Table 3G.1-35 shows liner plate strains. The liner maximum strain is found to be 0.0041 at Section 6, which is within allowable limits given in Table CC-3720-1, ASME B&PV Code, Section III, Division 2. The liner stresses during construction are kept within the allowable values found in Table CC-3720-1 of ASME B&PV Code, Section III, Division 2 by limiting concrete placement pressure to a maximum of 167 kPa (24.22 psi) for the top slab, 48 kPa (6.96 psi) for the upper drywell/lower drywell wall and 32 kPa (4.64 psi) for the wetwell wall.*

#### *3G.1.5.4.1.2 Containment Top Slab and Suppression Pool Slab*

*Sections 12 through 17 are examined for the Containment Top Slab and Suppression Pool Slab. The locations of these sections are shown in Figure 3G.1-28.. The maximum rebar stresses are found to be 339.3 MPa (49.21 ksi) at Section 15 due to the load combination CV-7b in the Top Slab, and 349.4 MPa (50.68 ksi) at Section 12 due to the combination CV-11a in the Suppression Pool Slab. The maximum concrete stresses are 30.7 MPa (4.45 ksi) and 25.6 MPa (3.71 ksi) in the Top Slab and the Suppression Pool Slab, respectively.*

*The maximum transverse shear stresses are found to be 1.96 MPa (0.28 ksi) at Section 15 for the load combination CV-7b in the Top Slab, and 4.33 MPa (0.63 ksi) at Section 14 for the combination CV-7a in the Suppression Pool Slab. The amounts of shear ties provided satisfy the required values at all sections, as indicated in Table 3G.1-33.*

*Maximum liner strain is found to be 0.0026 at Section 12 as shown in Table 3G.1-35 and is within ASME Code allowable.*

#### *3G.1.5.4.1.3 Containment Foundation Mat*

*Sections 10 and 11 are evaluated for the part of the concrete containment in the foundation mat. The sections are shown in Figure 3G.1-28.. The maximum rebar stress is calculated as 172.5 MPa (25.02 ksi) at Section 11 just inside the RPV Pedestal and is shown in Table 3G.1-32. The maximum transverse shear stress of 1.21 MPa (0.18 ksi) is found also at the Section 11 for the load combination CV-11b.*

*The liner plate maximum strain is found to be 0.0004 at Section 11 as shown in Table 3G.1-35.*

*3G.1.5.4.1.4 Drywell Head*

*Figure 3G.1-51 shows the design details. The highest stresses are summarized in Table 3G.1-36. The stresses except $P_L+P_b+Q$ at service Level A and B are well within the allowable stress limits. $P_L+P_b+Q$ at service Level A and B exceeds allowable; however, it meets all requirements for simplified elastic-plastic analysis stipulated in NE-3228.3 of ASME Boiler and Pressure Vessel (B&PV) Code, Sec. III.*

***Simplified Elastic-Plastic Analysis***

*The range of primary plus secondary stress intensity $S_n$ is 797 MPa (116 ksi) and the allowable of $3S_{m1}$ is 456 MPa (66.1 ksi) from Table 3G.1-36. $S_n$ exceeds $3S_{m1}$, so simplified elastic-plastic analysis is required. The results of comparison against each requirement of NE-3228.3 are as follows.*

*(1) NE-3228.3 (a)*

*The range of primary plus secondary membrane plus bending stress intensity, excluding thermal bending stress is 392 MPa (56.9 ksi) from the result of finite element analysis (FEA).*

*(2) NE-3228.3 (b)*

*The values of $S_a$ used for entering the design fatigue curve are multiplied by the factor $K_e$. The values of m and n are decided as 3 and 0.2 respectively from Table NE-3228.3(b) -1 of ASME B&PV Code, Sec. III. Because $S_{m1}$ is 152 MPa (22.0 ksi) from Table 2A of ASME B&PV Code, Sec. II, Part D, $3 \cdot m \cdot S_{m1}$ is calculated as 1368 MPa (198 ksi). $S_n$ = 797 MPa (116 ksi) is between $3 \cdot S_{m1}$ = 456 MPa (66.1 ksi) and $3 \cdot m \cdot S_{m1}$ = 1368 MPa (198 ksi), so $K_e$ is calculated by the following Formula:*

$$K_e = 1.0+[(1-n)/n \bullet (m-1)] \bullet [(S_n/3 \bullet S_{m1})-1] = 2.5$$

*(3) NE-3228.3 (c)*

*Fatigue evaluation is conducted as follows:*

$S_a = K_e \cdot S_n$ = 1993 MPa (289 ksi)

$E_1$ = 207 GPa (30000 ksi)

$E_2$ = 194 GPa (28100 ksi)

*Where*

$E_1$: *Modulus of elasticity given on the design fatigue curve from Figure I-9.1 of Appendix I of Sec. III.*

$E_2$: *Modulus of elasticity at 171°C (340°F)+ from Table TM-1 of Sec. II, Part D*

$S_a' = S_a \cdot (E_1/E_2)$ = 2131 MPa (309 ksi)

*$S_a$ for 10 cycles is 3999 MPa (580 ksi) from Table I-9.1 (UTS ≤ 80 ksi) and N for*

*$S_a'$ = 2131 MPa (309 ksi) is obtained as 38 from Table I-9.1, General Note (b). So the requirement of NE-3228.3 (c) is satisfied.*

*(4) NE-3228.3 (d)*

*Because an accident temperature $T_a$ is not a cyclic load, the thermal ratcheting can be neglected.*

*(5) NE-3228.3 (e)*

*From Table NE-3228.3(b)-1, the maximum temperature $T_{max}$ is 370°C (700°F) for carbon steel. $T_a$ is 171°C (340°F), so it satisfies this requirement.*

*(6) NE-3228.3 (f)*

*Specified minimum yield strength $S_y$ and specified minimum tensile strength $S_u$ of SA-516 Gr. 70 are 262 MPa (38 ksi) and 483 MPa (70 ksi) respectively. The ratio of $S_y$ to $S_u$ is calculated as 0.543. This value is below 0.80. So it satisfies this requirement.*

***Fatigue Evaluation***

*Fatigue evaluation is performed in accordance with ASME B&PV Code Section III, Subsection NE-3221.5(d) in which the limits on peak stress intensities as governed by fatigue are considered and satisfied when the Service Loadings meet the stipulated condition.*

*3G.1.5.4.1.5 PCCS Condenser*

*A finite-element analysis model supplemented with hand calculation is used to determine the stresses in the different components of the PCCS condenser and supports. The finite-element analysis is performed using the ANSYS computer code. The 3D finite-element model presented in Reference 3G.1-3 is used. The 3D steel frame structure is modeled by beam-type elements. The rest of PCCS condenser components are modeled by shell-type elements. Static and dynamic analyses are performed to evaluate the different loads including detonation. The seismic contribution to the dynamic load cases is analyzed by the response spectrum method. The stress evaluation is performed for loads and load combinations in accordance with Table 3.8-4 and associated acceptance criteria for pressure retaining components of the condenser. The condenser supports are designed to the same loads and load combinations in accordance with the acceptance criteria of ASME B&PV Code, Section III, Subsection NF.*

*The calculated stresses in various elements of the PCCS condenser and supports are shown in Reference 3G.1-3.*

*3G.1.5.4.2 Containment Internal Structures*

*Tables 3G.1-37 through 3G.1-44 show the summary of stress analysis results for containment internal structures.*

*The types of analysis for various loads considered for the containment internal structures, such as diaphragm floor, vent wall, RPV support bracket, RSW and GDCS pool are:*

*(1) Dead load*

*Static analysis is performed for the dead load to all containment internal structures. Hydrostatic loads of pool water are also applied statically to vent wall and GDCS pool.*

*(2) Pressure load*

*Static analysis is performed for the pressure load ($P_o$ and $P_a$) applied to diaphragm floor and vent wall.*

*(3) Thermal load*

*Static analysis is performed for the thermal load ($T_o$ and $T_a$) to all internal structures. All steel temperatures are the same as atmospheric temperature. The temperature of the intermediate node of vent wall rib plate is the average value of outer and inner plate nodes.*

*(4) Seismic load*

*Static analyses are performed for the seismic load on the diaphragm floor, vent wall, RPV support bracket and RSW in the integral NASTRAN model, and on the GDCS pool in the GDCS pool local model.*

*In this response spectra analysis, it is assumed that all pool water mass is distributed uniformly on the GDCS pool wall and RCCV wall. This is considered as a conservative assumption, therefore sloshing is not considered in the GDCS pool local model. For the integral NASTRAN model, however, sloshing load is considered as the static pressure load on D/F upper surface and static reaction load from the GDCS pool wall. Results from the integral NASTRAN model due to these loads are used for the structural integrity evaluation of the structures other than GDCS pool, while results from the GDCS pool local model are used for evaluation of the GDCS pool itself.*

*(5) Hydrodynamic load*

*Static analysis is performed for the hydrodynamic load (CO, CH and SRV) on the vent wall taking DLF = 2 into account.*

*(6) Pipe Break loads consist of annulus pressurization load, jet impingement and pipe-whip restraint loads*

*These loads acting on the RSW are first analyzed for dynamic response using the NASTRAN beam model. The resulting maximum values of bending moment and shear force are then applied to the integral NASTRAN static analysis model.*

*The square root of the sum of the squares (SRSS) method is used to combine the stresses due to dynamic loads, such as seismic, hydrodynamic and annulus pressurization loads, for all steel structures.*

#### 3G.1.5.4.2.1 Diaphragm Floor

**Design of Structural Components**

The design of the diaphragm floor is based on the elastic analysis results obtained from the model described in Subsection 3G.1.4. Figure 3G.1-55 shows design details. Table 3G.1-37 summarizes the highest stresses in various structural elements of the diaphragm floor slab. All stresses are within allowable stress limits.

**Design of Anchorage**

Figure 3G.1-56. shows diaphragm floor anchorage into the RCCV wall. Rebars are used for anchoring the steel plates. Threaded couplers are used so that the anchor bars can be connected after installation of the reinforcing steel of the RCCV wall. The anchorage is designed so as to avoid interference with the RCCV reinforcing steel. Anchorage requirements for various loading combinations and the capacity of anchorage provided are shown in Table 3G.1-38.

#### 3G.1.5.4.2.2 Vent Wall Structure

**Design of Structural Components**

Figure 3G.1-57. shows the design details. Highest stresses in inner cylinder, outer cylinder and the web plates are summarized in Table 3G.1-39. The stresses are shown to be within allowable stress limits.

**Design of Anchorage**

Figure 3G.1-57. shows vent wall anchorage into the RCCV wall. Rebars are used for anchoring the steel plates. Threaded couplers are used so that the anchor bars can be connected after installation of the reinforcing steel of the RCCV wall. The anchorage is designed so as to avoid interference with the RCCV reinforcing steel. Anchorage requirements for various loading combinations and the capacity of anchorage provided is shown in Table 3G.1-42.

#### 3G.1.5.4.2.3 Reactor Shield Wall

The RSW is designed to resist the loads and loading combinations discussed in Subsection 3G.1.5.2. Annulus pressurization loads are also considered.

Figure 3G.1-58. shows the design details. The highest stresses are summarized in Table 3G.1-40. The stresses are well within the allowable stress limits.

#### 3G.1.5.4.2.4 RPV Support Bracket

**Design of Structural Components**

Figure 3G.1-57. shows the design details. The calculated stresses in various elements of the support bracket are shown in Table 3G.1-41 and are within allowable stress limits.

***Design of Anchorage***

*Figure 3G.1-57. shows RPV support bracket anchorage into the RCCV wall. Rebars are used for anchoring the steel plates. Threaded couplers are used so that the anchor bars can be connected after installation of the reinforcing steel of the RCCV wall. The anchorage is designed so as to avoid interference with the RCCV reinforcing steel. Anchorage requirements for various loading combinations and the capacity of anchorage provided are shown in Table 3G.1-42.*

*3G.1.5.4.2.5 Gravity-Driven Cooling System Pool*

***Design of Structural Components***

*Figure 3G.1-59 shows the design details. Highest stresses are summarized in Table 3G.1-43. The stresses are within allowable stress limits.*

***Design of Anchorage***

*Threaded mechanical couplers with anchor bars are used as shown in Figure 3G.1-59. Table 3G.1-44 shows the anchorage requirements and capacity of anchorage provided.*

*3G.1.5.4.3 Reactor Building*

*Tables 3G.1-45 through 3G.1-49 show the resultant combined forces and moments in accordance with the selected load combinations listed in Table 3G.1-11. Table 3G.1-50 lists the sectional thicknesses and rebar ratios used in the evaluation. At each section, in general, three elements are analyzed at azimuth 0°, 90° and 135° (or 45°).*

*Tables 3G.1-51 through 3G.1-55 show the rebar and concrete stresses at these sections for the representative elements. Table 3G.1-56 summarizes evaluation results for transverse shear in accordance with ACI 349-01, Chapter 11.*

*Sections 18 through 31 shown in Figure 3G.1-28. are analyzed for the RB outside the containment. Sections 18 to 23 are selected for the RB shear walls, Section 24 for the basemat outside the containment, Sections 25 to 27 for the RB slabs, Sections 28 to 30 for the IC/PCCS pool girders and Section 31 for the Main Steam tunnel wall and slab.*

*3G.1.5.4.3.1 RB Shear Walls*

*The maximum rebar stress of 356.7 MPa (51.74 ksi) is found in the vertical rebar at Section 22 due to the load combination RB-9b as shown in Table 3G.1-55. The maximum horizontal rebar stress is found to be 352.0 MPa (51.05 ksi) at Section 22 due to the load combination RB-9b as shown in Table 3G.1-55. The maximum transverse shear force is found to be 4.69 MN/m (26.80 kips/in) against the shear strength of 6.59 MN/m (37.60 kips/in) at Section 20, the top of the cylindrical wall below the RCCV wall.*

#### 3G.1.5.4.3.2 RB Foundation Mat Outside Containment

*Section 24 is selected for the foundation mat outside the containment at the junction with the cylindrical wall below the RCCV wall. The maximum rebar stress of 327.4 MPa (47.49 ksi) is found in the top rebar as shown in Table 3G.1-54. The maximum bottom rebar stress is found to be 133.6 MPa (19.38 ksi) also as shown in Table 3G.1-54. The maximum transverse shear force is found to be 10.74 MN/m (61.30 kips/in) against the shear strength of 16.03 MN/m (91.50 kips/in).*

#### 3G.1.5.4.3.3 RB Floor Slabs

*Sections 25 to 27 are selected for the floor slabs at elevations EL 4650, EL 17500 and EL 27000 (see Figure 3G.1-28.) at their junction with the RCCV.*

*The maximum rebar stress of 344.0 MPa (49.89 ksi) is found at Section 27 as shown in Table 3G.1-55. The maximum transverse shear force is found to be 10.27 MN/m (58.59 kips/in) against the shear strength of 13.01 MN/m (74.22 kips/in).*

#### 3G.1.5.4.3.4 Pool Girders

*The maximum rebar stress of 231.7 MPa (33.60 ksi) is found in the horizontal rebar at Section 30 as shown in Table 3G.1-55, whereas the maximum vertical rebar stress is found to be 249.1 MPa (36.13 ksi) at Section 28 as shown in Table 3G.1-55. The maximum transverse shear force is found to be 1.20 MN/m (6.85 kips/in) against the shear strength of 3.32 MN/m (18.94 kips/in).*

#### 3G.1.5.4.3.5 Main Steam Tunnel Floors and Walls

*Section 31 is selected for the MS tunnel wall and slabs. The MS tunnel is composed of the reinforced concrete structures as described in Subsection 3G.1.5.4.3.3.*

*The maximum rebar stress is found to be 220.5 MPa (31.98 ksi) in Table 3G.1-51, and the maximum transverse shear force is found to be 0.47 MN/m (2.68 kips/in) against the shear strength of 3.70 MN/m (21.1 kips/in).*

### 3G.1.5.5 Foundation Stability

*The RB, the concrete containment and the FB share a common foundation. The stabilities of the foundation against overturning, sliding and floatation are evaluated. The energy approach is used in calculating the factor of safety against overturning.*

*The factors of safety against overturning, sliding and floatation are given in Table 3G.1-57. All of these meet the acceptance criteria given in Table 3.8-14. The factor of safety against sliding is obtained according to the procedure shown in Subsection 3.8.5.5. The stress check is performed for the exterior walls against the wall capacity passive pressure. The results are shown in Tables 3G.1-57a through 3G.1-57e. Shear keys under the basemat shown in Figures 3G.1-1, 3G.1-6 and 3G.1-7 are used to resist sliding.*

*Maximum soil bearing stress is found to be 699 kPa (14600 psf) due to dead plus live loads.*

*The maximum bearing stresses shown in Table 3G.1-58 are evaluated using the Energy Balance Method (Reference 3G.1-2). In order to verify the results, toe pressures obtained by the finite element analyses using the RB/FB global model are compared with the values in Table 3G.1-58. As a result, the bearing pressures calculated by the Energy Balance Method envelop the pressures of finite element analyses.*

*A series of parametric analyses are performed to verify the assumptions and results of the global finite element analysis is used as the baseline for the basemat design.*

- *Lateral variations of soil stiffness are evaluated using the global finite element model. Analyses are performed assuming "Hard spot" and "Soft spot" under the RPV Pedestal area.*
- *Construction loads are evaluated in the design of the basemat. The analyses focus on the response of the basemat during the early stage of construction when it could be susceptible to differential loading and deformations.*
- *The analyses are performed to confirm acceptability of allowable total and differential settlement that are specified over the length of the foundation.*

*Details are provided in Subsections 3G.1.5.5.2 through 3G.1.5.5.4.*

#### *3G.1.5.5.1 Effect of Basemat Uplift*

*As described in Appendix 3G.1.4.2, the foundation soil is represented by elastic soil springs which resist both compression and tension. However, actual foundation soil cannot bear tensile force. This difference has an influence on the stresses in the basemat, if the basemat is uplifted due to design loads. Therefore, analyses to evaluate the effect of potential uplift of the basemat are performed using the RB/FB global finite element model shown in Figure 3G.1-8.*

*An iterative approach is used. Based on the result from the initial analysis, the tension capability is removed in the next iteration for those springs that are in tension. This iterative process is continued until there are no more springs in tension.*

*Analyses are performed for the horizontal Safe Shutdown Earthquake (SSE) loads. Figures 3G.1-60 through 3G.1-64 show the comparison of the sectional deformations of the basemat and the bending moments generated in the basemat respectively at the final step of iteration. In the area close to the RCCV wall, bending moments are higher than that of the linear analysis results; however the resulting stresses in the concrete and reinforcement for the design "SSE + LOCA" load combination are still below the code allowables with large margins as shown in Table 3G.1-59. Therefore, it can be concluded that the effect of uplift is negligible to the linear analysis using the global finite element model.*

#### *3G.1.5.5.2 Effect of Horizontal Variation of Soil Spring*

*To account for potential horizontal variation of foundation soil stiffness over the basemat width, stiff soil springs are considered under the RPV Pedestal area assuming linear variation to the edge of*

*the mat. The RPV Pedestal is selected because it produces the largest clear span for the mat and is likely to be the first structure constructed on the mat. This is used as the "Hard Spot". In addition, the inverted variation, i.e. softer soil springs assumed under the RPV Pedestal area, is also considered and called the "Soft Spot". Based on the analysis results for these soil conditions, some of the "Soft Spot" case results predict larger mat bending moments than the uniform soil condition. However, the DCD design envelopes the results of horizontal variation of soil spring as long as the ratio of spring stiffness at the basemat center to that at the basemat edge does not exceed three. This spring stiffness ratio converts to $\sqrt{3}$ (1.7) for the corresponding shear wave velocity ratio.*

#### *3G.1.5.5.3 Effect of Construction Sequence*

*The basemat design is checked against the loads expected during construction of the basemat. The RB/FB basemat is divided into seven zones for concrete pour and these zones are investigated for three possible construction sequences. The moment differences between sequences considered are negligibly small in comparison with the moments used in the basemat design. In addition to basemat construction sequence, the impact of the building structures construction sequence, i.e., RPV Pedestal, RCCV and walls, on the basemat design is also investigated. The evaluation results confirm that the building structures construction sequence has negligible effect on the basemat design. These studies include horizontal soil spring variations, "Hard Spot" and "Soft Spot" as described in Subsection 3G.1.5.5.2.*

*The actual construction sequence will be consistent with the sequences evaluated above and will be reflected in the construction specification.*

#### *3G.1.5.5.4 Foundation Settlement*

*The basemat design is checked against the normal and differential settlement of the RB/FB. It is found that the basemat can resist the maximum mat foundation corner settlement of 103 mm (4.0 in) and the settlement averaged at four corners of 65 mm (2.6 in). The relative displacement between two corners along the longest dimension of the building basemat calculated under linearly varying soil stiffness is 77 mm (3.0 in). The estimated differential settlement between buildings (RB/FB and CB) is 85 mm (3.3 in). These values are specified as maximum settlements in Table 2.0-1.*

### *3G.1.5.6 Tornado Missile Evaluation*

*The minimum thickness required to prevent penetration, concrete spalling and scabbing is evaluated. The methods and procedures are shown in Subsection 3.5.3.1.1. The minimum thickness required is less than the minimum 1000 mm (39.4 in) and 700 mm (27.6 in) thickness provided for the RB external walls and roof, respectively.*

### *3G.1.6 References*

*3G.1-1 Burns & Roe, "State-of-the-Art Report on High Temperature Concrete Design," prepared for US. Department of Energy, Document No. DOE/CH/94000-1, November 1985.*

*3G.1-2 Tseng, W.S. and Liou, D.D., "Simplified Methods for Predicting Seismic Basemat Uplift of Nuclear Power Plant Structures, Transactions of the 6th International Conference on SmiRT", Paris, France, August 1981.*

*3G.1-3 GE Hitachi Nuclear Energy, "ESBWR ICS and PCCS Condenser Combustible Gas Mitigation Structural Evaluation," NEDE-33572P, Class II (Proprietary), Revision 3, September 2010; NEDO-33572, Revision 3, Class I (Non-proprietary), September 2010.*

## *Table 3G.1-1 Soil Spring Constants for the RB Analysis Model*

| Direction of Spring | | Loads | Stiffness ($MN/m/m^2$) |
|---|---|---|---|
| Horizontal | X-direction | All | 9.107 |
| | Y-direction | All | 9.654 |
| Vertical | | Horizontal Seismic Loads | 38.35 |
| | | Other Loads | 13.66 |

*SI to U.S. Customary units conversion (SI units are the controlling units and U.S. Customary units are for reference only): 1 $MN/m/m^2$= $6.366x10^3$ $lbf/ft/ft^2$*

## Table 3G.1-2 Site Design Parameters

| Parameter | | Value(s) |
|---|---|---|
| Soil | | |
| | Minimum Shear Wave Velocity, m/s (ft/s) | 300 (1000) |
| Maximum Ground Water Level, m (ft) | | 0.61 (2.0) below plant grade |
| Maximum Flood (or Tsunami) Level, m (ft) | | 0.30 (1.0) below plant grade |
| Maximum Roof Snow Load, Pa (lbf/ft$^2$)** | | |
| Normal Winter Precipitation Event | | 1843 (38.5) |
| Extreme Winter Precipitation Event | | 5985 (125) |
| Design Exterior Temperatures | | |
| | Summer, °C (°F)*** | 46.1 (115) |
| | Winter, °C (°F) | -40.0 (-40) |
| Seismology: For seismic design parameters, refer to Subsection 3.7.1. | | |
| Extreme Wind | | |
| | Basic Wind Speed (100-year recurrence interval (3-sec gust)), m/s (mph)* | 67.1 (150) |
| | Exposure Category | Exposure D |
| Tornado | | |
| | Maximum Tornado Wind Speed, m/s (mph) | 147.5 (330) |
| | Maximum Rotational Speed, m/s (mph) | 116.2 (260) |
| | Translational Speed, m/s (mph) | 31.3 (70) |
| | Radius, m (ft) | 45.7 (150) |
| | Pressure Drop, kPa (psi) | 16.6 (2.4) |
| | Rate of Pressure Drop, kPa/s (psi/s) | 11.7 (1.7) |
| | Missile Spectrum | Spectrum I of SRP 3.5.1.4, Rev. 2 applied to full building height. |

## Table 3G.1-2 Site Design Parameters

| Parameter | | Value(s) |
|---|---|---|
| Maximum Rainfall** | | |
| | Design Rainfall, cm/hr (in/hr) | 49.3 (19.4) |
| | (Deleted) | |

Notes

* *Equivalent to 62.6 m/s (140 mi/hr) 50-year recurrence interval wind speed (3-sec gust) with importance factor of 1.15 per ASCE 7-02.*

** Based on probable maximum precipitation (PMP) for one hour over 2.6 $km^2$ (one square mile) with a ratio of 5 minutes to one hour PMP of 0.32 as found in National Weather Service Publication Hydrometeorology Report No. 52 (HMR-52). 49.3 cm/hr (19.4 in/hr) for maximum rainfall rate is selected for design. The maximum short term rate selected is 15.7 cm (6.2 in) in 5 minutes. The roof scuppers and drains are designed independently to handle the PMP. The roof snow load for the normal winter precipitation event is less than the design live load of 2873 Pa (60 $lbf/ft^2$) for all load combinations. The roof snow load of 5985 kPa (125 $lbf/ft^2$) for the extreme winter precipitation event is based on the 0.61 m (2.0 ft) height of the parapet and the specific weight of water. Water will not accumulate above the height of the parapet during the extreme winter precipitation event when the roof scuppers and drains are assumed to be clogged. The roof is also capable of withstanding extreme live load for the extreme winter precipitation event because it is less than the SSE vertical load considered in the roof design. ASCE 7-02 requirements for snow are used to analyze the various roof geometries and heights. The conversion between the ground snow load and roof snow load is based on ASCE 7-02 Equation 7-1 using 1.1 exposure factor for sheltered roof in Terrain Category C, 1.0 thermal factor and 1.0 importance factor.

*** Steady state; 47.2°C (117°F) allowed for short term.

## Table 3G.1-3 Equipment and Hydrostatic Loads inside RCCV

| Description | Weight |
|---|---|
| Reactor Pressure Vessel (normal operating condition) | 21600 kN |
| Drywell Top Head (including refueling facilities bulkhead plate) | 1100 kN |
| Top Slab | |
| a. Liner below slab | 2.5 kN/m$^2$ |
| b. Miscellaneous attachments below slab | 2.4 kN/m$^2$ |
| Upper Drywell | |
| a. Wall Liner | 2.7 kN/m$^2$ |
| b. Personnel Airlock (EL17500) | 200 kN |
| c. Equipment Hatch (EL17500) | 110 kN |
| d. Miscellaneous attachments to wall | 2.4 kN/m$^2$ |
| GDCS Pool | |
| a. Water (H=6.8 m) | 67 kN/m$^2$ |
| Wetwell | |
| a. Water (H=5.5 m) HWL | 54 kN/m$^2$ |
| b. Wall Liner | 1.6 kN/m$^2$ |
| c. Floor Liner | 2.4 kN/m$^2$ |
| d. Access Hatch (EL13570) | 90 kN |
| e. Quenchers (10 units) | 510 kN |
| f. Miscellaneous attachments to wall | 2.4 kN/m$^2$ |
| Lower Drywell | |
| a. Wall Liner | 3.1 kN/m$^2$ |
| b. Floor Liner | 0.6 kN/m$^2$ |
| c. Sacrificial (BiMAC) concrete (H=1.6 m) | 36 kN/m$^2$ |
| d. Personnel Airlock (EL-6400) | 200 kN |
| e. Equipment Hatch (EL-6400) | 110 kN |
| f. Miscellaneous attachments to wall | 2.4 kN/m$^2$ |
| RCCV Internal Structures except Diaphragm Floor | |
| a. Equipment and piping on the slab | 2.4 kN/m$^2$ |
| Diaphragm Floor (excluding GDCS pool areas) | |
| a. Equipment and piping on the slab | 9.8 kN/m$^2$ |

*SI to U.S. Customary units conversion (SI units are the controlling units and U.S. Customary units are for reference only):*
*1 kN = 224.809 lbf*
*1 kN/m$^2$ = 20.885 psf*
*1 m = 3.28 ft*

## Table 3G.1-4 Equipment and Hydrostatic Loads in RB Pools

| Description | Weight | Remarks |
|---|---|---|
| Reactor Well | | |
| a. Water (H=6.85m) | 66 kN/m$^2$ | |
| b. Wall Liner | 1.0 kN/m$^2$ | |
| c. Floor Liner | 1.6 kN/m$^2$ | |
| Equipment Storage Pool | | |
| a. Water (H=6.85m) | 66 kN/m$^2$ | |
| b. Wall Liner | 1.0 kN/m$^2$ | |
| c. Floor Liner | 1.6 kN/m$^2$ | |
| d. Steam Dryer, Steam Separator | 66 kN/m$^2$ | During refueling |
| Fuel Buffer Pool | | |
| a. Water (H=6.85m) | 66 kN/m$^2$ | |
| b. Wall Liner | 1.0 kN/m$^2$ | |
| c. Floor Liner | 1.6 kN/m$^2$ | |
| d. Fuel Storage Racks | 153 kN/m$^2$ | During refueling |
| IC/PCCS Pools | | |
| a. Water (H=4.8m) | 47 kN/m$^2$ | |
| b. Wall Liner | 1.0 kN/m$^2$ | |
| c. Floor Liner | 1.6 kN/m$^2$ | |
| d. IC heat exchanger | 333 kN/unit | |
| e. PCCS heat exchanger | 233 kN/unit | |
| Inclined Fuel Transfer Tube Pool | | |
| a. Water (H=11.64m) | 114 kN/m$^2$ | |
| b. Wall Liner | 1.0 kN/m$^2$ | |
| c. Floor Liner | 1.6 kN/m$^2$ | |
| IC/PCCS Expansion Pools | | |
| a. Water (H=4.8m) | 47 kN/m$^2$ | |
| b. Wall Liner | 1.0 kN/m$^2$ | |
| c. Floor Liner | 1.6 kN/m$^2$ | |
| Equipment Storage Pool Gate | 300 kN | |

## Table 3G.1-4 Equipment and Hydrostatic Loads in RB Pools

| Description | Weight | Remarks |
|---|---|---|
| Buffer Pool Gate | 300 kN | The actual value considered in the building stress analysis is 50 kN. The increased pool gate weight is negligibly small as compared to the weight of the RCCV top slab which supports the pool gates.(1) |
| Inclined Fuel Transfer Tube Pool Gate | 50 kN | |

*(1) RCCV top slab weight (w) = $\pi[(R_o)^2-(R_i)^2](t)(\rho)$; where $R_o$=18 m, $R_i$=5.25 m, t=2.4 m, $\rho$=0.0235 MN/m$^2$. Then, w=52500 kN or 175 times the 300 kN pool gate weight.*

*SI to U.S. Customary units conversion (SI units are the controlling units and U.S. Customary units are for reference only):*

*1 kN = 224.809 lbf*

*1 kN/m$^2$ = 20.885 psf*

*1 m = 3.28 ft*

## Table 3G.1-5 Miscellaneous Structures, Piping, and Commodity Loads on RB Floor

| Elevation (mm) | Weights | Remarks |
|---|---|---|
| 52,400 | 2.4 kN/m$^2$ (50psf) | |
| 34,000 | 2.4 kN/m$^2$ (50psf) | |
| 27,000 | 2.4 kN/m$^2$ (50psf) | |
| 17,500 | 2.4 kN/m$^2$ (50psf)<br>20.0 kN/m$^2$ (415psf) | Main Steam Tunnel |
| 13,570 | 2.4 kN/m$^2$ (50psf) | |
| 9,060 | 2.4 kN/m$^2$ (50psf) | |
| 4,650 | 2.4 kN/m$^2$ (50psf) | |
| -1,000 | 2.4 kN/m$^2$ (50psf) | |
| -6,400 | 2.4 kN/m$^2$ (50psf) | |
| -11,500 | 2.4 kN/m$^2$ (50psf) | |

*SI to U.S. Customary units conversion (SI units are the controlling units and U.S. Customary units are for reference only): 1 mm = 0.00328 ft*

## Table 3G.1-6 Equivalent Linear Temperature Distributions at Various Sections

| Section(1) | Side(2) | | Equivalent Linear Temperature(3) (°C) | | | | | |
|---|---|---|---|---|---|---|---|---|
| | | | Normal Operation Winter | | DBA (6 min) Winter | | DBA (72 hr) Winter | |
| | 1 | 2 | Td | Tg | Td | Tg | Td | Tg |
| C1 | DW | RM | 33.5 | 38.1 | 34.7 | 45.2 | 58.2 | 127.3 |
| C2 | WW | RM | 26.5 | 26.7 | 27.4 | 32.0 | 47.0 | 101.0 |
| C3 | SP | RM | 28.2 | 29.5 | 28.8 | 32.7 | 45.2 | 90.8 |
| C4 | SP | RM | 28.2 | 29.5 | 28.7 | 32.4 | 45.2 | 90.8 |
| C5 | DW | IP | 49.4 | 12.8 | 50.6 | 17.6 | Note (4) | Note (4) |
| C6 | DW | XP | 49.4 | 12.8 | 50.6 | 17.7 | Note (4) | Note (4) |
| C7 | DW | RM | 33.5 | 39.3 | 34.5 | 45.5 | 53.9 | 121.2 |
| M1 | DW | GR | 27.5 | 23.9 | 27.5 | 23.9 | 27.5 | 23.9 |
| M2 | RM | GR | 12.9 | -5.2 | 12.9 | -5.2 | 12.9 | -5.2 |
| P1 | IP | DP | 43.0 | 0.0 | 43.3 | 1.5 | Note (4) | Note (4) |
| P2 | IP | XP | 43.0 | 0.0 | 44.2 | 0.3 | Note (4) | Note (4) |
| W1 | RM | RM | 10.0 | 0.0 | 10.0 | 0.0 | 10.0 | 0.0 |
| W2 | RM | GR | 13.0 | -4.9 | 13.0 | -4.9 | 13.0 | -4.9 |
| W3 | RM | AT | -17.7 | 42.3 | -17.7 | 42.3 | -17.7 | 42.3 |
| S1 | RM | RM | 10.0 | 0.0 | 10.0 | 0.0 | 10.0 | 0.0 |
| S2 | RM | AT | -20.0 | 36.0 | -20.0 | 36.0 | -20.0 | 36.0 |

*(1) See Figure 3G.1-20. for the location of sections.*

*(2) AT: Air*

*DBA: Design Basis Accident*

*DP: Equipment Storage Pool, Reactor Well, and Buffer Pool*

*DW: Drywell*

*GR: Ground*

*IP:I C/PCCS Pool*

*RM: RB Room outside Containment*

*SP: Suppression Pool*

*WW: Wetwell Air Space*

*XP: Expansion Pool*

*(3) Td: Average Temperature*

*Tg: Surface Temperature Difference (positive when temperature at Side 1 is higher)*

*(4) See Table 3G.5-1*

*SI to U.S. Customary units conversion (SI units are the controlling units and U.S. Customary units are for reference only):*

*1°C = (°F - 32)/1.8*

## Table 3G.1-7 Pressure Loads Inside RCCV

| Event | Drywell pressure in kPaG (psig) | Wetwell pressure in kPaG (psig) | Note |
|---|---|---|---|
| Normal operation | 9.0 (1.3) | 9.0 (1.3) | |
| SIT*1 | 356.8 (51.8) | 356.8 (51.8) | Maximum pressure |
| SIT*2 | 310 (45) | 32.5 (4.75) | Maximum differential pressure |
| LOCA (6 minutes) | 257 (37.3) | 241 (35.0) | |
| LOCA (72 hours) | 310 (45) | 310 (45) | |

* SIT: Structural Integrity Test

## Table 3G.1-8 Pressure Loads Inside IC/PCCS Pools

| Event | IC/PCCS pool pressure in kPaG (psig) |
|---|---|
| Normal operation | 34.5 (5) |
| LOCA | 48.3 (7) |

## Table 3G.1-9 Maximum Vertical Acceleration

| RB/FB Walls | | |
|---|---|---|
| Elev. (m) | Node No. | Max. Vertical Acceleration (g) |
| 52.40* | 110 | 1.25 |
| 34.00 | 109 | 0.83 |
| 27.00 | 108 | 0.73 |
| 22.50 | 107 | 0.73 |
| 17.50 | 106 | 0.73 |
| 13.57 | 105 | 0.74 |
| 9.06 | 104 | 0.73 |
| 4.65 | 103 | 0.78 |
| -1.00 | 102 | 0.76 |
| -6.40 | 101 | 0.68 |
| -11.50 | 2 | 0.63 |
| -15.50 | 1 | 0.51 |
| RCCV Wall | | |
| 34.00 | 209 | 0.90 |
| 27.00 | 208 | 0.88 |
| 17.50 | 206 | 0.73 |
| 13.57 | 205 | 0.78 |
| 9.06 | 204 | 0.65 |
| 4.65 | 203 | 0.69 |
| -1.00 | 202 | 0.59 |
| -6.40 | 201 | 0.59 |
| RPV Pedestal/Vent Wall | | |
| 17.50 | 701 | 1.10 |
| 14.50 | 702 | 1.04 |
| 11.50 | 703 | 0.92 |
| 8.50 | 704 | 0.77 |
| 7.4625 | 705 | 0.70 |
| 4.65 | 706, 303 | 0.67 |
| 2.4165 | 377 | 0.64 |
| -1.00 | 302 | 0.59 |
| -2.753 | 376 | 0.51 |
| -6.40 | 301 | 0.50 |

| RB/FB Slabs | | |
|---|---|---|
| Elev. (m) | Node No. | Max. Vertical Acceleration (g) |
| 52.40* | 9101 | 1.20 |
| | 9102 | 1.82 |
| | 9103 | 3.14 |
| | 9104 | 2.26 |
| | 9105 | 2.32 |
| | 9106 | 2.99 |
| | 9107 | 2.80 |
| | 9108 | 2.61 |
| 34.00 | 9091 | 1.29 |
| | 9092 | 1.06 |
| 27.00 | 9081 | 1.16 |
| | 9082 | 0.99 |
| | 9083 | 1.09 |
| | 9084 | 1.31 |
| | 9085 | 0.97 |
| 22.50 | 9071 | 1.60 |
| | 9072 | 1.31 |
| | 9073 | 2.03 |
| | 9074 | 1.31 |
| | 9075 | 1.16 |
| 17.50 | 9061 | 1.79 |
| | 9062 | 1.49 |
| | 9063 | 0.82 |
| | 9064 | 1.84 |
| | 9065 | 1.42 |
| | 99064 | 1.07 |
| 13.57 | 9051 | 0.81 |
| | 9052 | 1.46 |
| 9.06 | 9041 | 0.88 |
| | 9042 | 1.42 |
| 4.65 | 9031 | 1.17 |
| | 9032 | 0.97 |
| | 9033 | 1.02 |
| | 9034 | 1.51 |
| | 9035 | 1.38 |
| -1.00 | 9021 | 1.12 |
| | 9022 | 1.45 |
| | 9023 | 1.01 |
| | 9024 | 0.89 |
| | 9025 | 1.34 |
| | 9026 | 1.57 |
| | 9027 | 0.88 |
| -6.40 | 9011 | 0.92 |
| | 9012 | 0.92 |
| | 9013 | 1.35 |

*Note: See Figure 3A.7-4 for the node numbers.*
**: The difference between the modeled elevation 52.4 m and the actual elevation 52.7 m at the RB roof is negligibly small.*
*SI to U.S. Customary units conversion (SI units are the controlling units and U.S. Customary units are for reference only): 1 m=3.28 ft*

## Table 3G.1-10 Selected Load Combinations for the RCCV

| Category | Load Combination | | | | | | | | | | | Acceptance Criteria(1) |
|---|---|---|---|---|---|---|---|---|---|---|---|---|
| | No.(2) | D | L | $P_t$ | $P_a$ | $T_a$ | $E'$(3) | $R_a$(3) | SRV(3) | CO(3) | Chugging(3) | |
| SIT (maximum pressure) | CV-1 | 1.0 | 1.0 | 1.0 | | | | | | | | S |
| LOCA (1.5Pa) 6 minutes | CV-7a | 1.0 | 1.0 | | 1.5 | 1.0 | | 1.0 | 1.25 | 1.5 | | U |
| LOCA (1.5Pa) 72 hours | CV-7b | 1.0 | 1.0 | | 1.5 | 1.0 | | 1.0 | 1.25 | | 1.5 | U |
| LOCA + SSE 6 minutes | CV-11 a | 1.0 | 1.0 | | 1.0 | 1.0 | 1.0 | 1.0 | 1.0 | 1.0 | | U |
| LOCA + SSE 72 hours | CV-11 b | 1.0 | 1.0 | | 1.0 | 1.0 | 1.0 | 1.0 | 1.0 | | 1.0 | U |

(1) S =Allowable Stress as in ASME B&PV Code Section III, Div. 2, Subsection CC-3430 for Service Load Combination.

U =Allowable Stress as in ASME B&PV Code Section III, Div. 2, Subsection CC-3420 for Factored Load Combination.

(2) Based on Table 3.8-2

(3) In load combinations that combine SSE with SRV, Chugging and CO, the loads are combined by SRSS.

## Table 3G.1-11 Selected Load Combinations for the RB

| Category | Load Combination | | | | | | | | | | | | Acceptance Criteria(1) |
|---|---|---|---|---|---|---|---|---|---|---|---|---|---|
| | No. (2) | D | L | $P_a$(3) | $T_o$ | $T_a$(3) | $E'$(4) | W | $R_a$(4) | SRV(4) | CO(4) | Chugging(4) | |
| Severe Environmental | RB-4 | 1.05 | 1.3 | | 1.3 | | | 1.3 | | | | | U |
| LOCA (1.5$P_a$) 6 minutes | RB-8a | 1.0 | 1.0 | 1.5 | | 1.0 | | | 1.0 | 1.25 | 1.5 | | U |
| LOCA (1.5$P_a$) 72 hours | RB-8b | 1.0 | 1.0 | 1.5 | | 1.0 | | | 1.0 | 1.25 | | 1.5 | U |
| LOCA + SSE 6 minutes | RB-9a | 1.0 | 1.0 | 1.0 | | 1.0 | 1.0 | | 1.0 | 1.0 | 1.0 | | U |
| LOCA + SSE 72 hours | RB-9b | 1.0 | 1.0 | 1.0 | | 1.0 | 1.0 | | 1.0 | 1.0 | | 1.0 | U |

(1) U =Envelope of "Allowable Stress as in ASME Section III, Div. 2, Subsection CC-3420 for Factored Load Combination" and "Required section strength based on the strength design method per ACI 349-01."

(2) Based on Table 3.8-15

(3) $P_a$ and $T_a$ are accident pressure load within the containment and thermal load generated by LOCA, respectively. $P_a$ and $T_a$ are indirect loads, but their effects are considered in the RB design.

(4) In load combinations that combine SSE with SRV, Chugging and CO, the loads are combined by SRSS.

## Table 3G.1-12 Material Constants for Design Calculations

| | | | Reinforced Concrete | | | Steel | | |
|---|---|---|---|---|---|---|---|---|
| | | **Temperature** (°C) | Basemat f'c=4000psi 27.6MPa | Others f'c=5000psi 34.5MPa | Top Slab f'c=6000psi 41.4MPa | Carbon Steel Liner | Stainless Steel Liner | Structural Steel |
| **Young's Modulus** (MPa) | **Temperature Loads** | <21 | $2.49\times10^4$ | $2.78\times10^4$ | $3.04\times10^4$ | $2.00\times10^5$ | | |
| | | 93 | $1.81\times10^4$ | $2.03\times10^4$ | $2.22\times10^4$ | | | |
| | | 204 | $1.62\times10^4$ | $1.81\times10^4$ | $1.98\times10^4$ | | | |
| | Other Loads | | $2.49\times10^4$ | $2.78\times10^4$ | $3.04\times10^4$ | $2.00\times10^{1*}$ | | $2.00\times10^5$ |
| Poisson's Ratio | | | 0.17 | | | 0.3 | | |
| Thermal Expansion (m/m°C) | | | $9.90\times10^{-6}$ | | | $1.17\times10^{-5}$ | $1.52\times10^{-5}$ | $1.17\times10^{-5}$ |
| Weight Density (MN/m$^3$) | | | 0.0235 | | | 0.0770 | | |

* *Except for the local thickened portions of the liner where the diaphragm floor, vent wall and RPV support brackets are attached. The full value of theYoung's modulus is considered for these thickened liners.*

*SI to U.S. Customary units conversion (SI units are the controlling units and U.S. Customary units are for reference only):*

*1°C = (°F - 32)/1.8*

*1 MPa = 145.038 psi*

*1 m/m°C = 0.556 ft/ft°F*

*1 MN/m$^3$ = 6.366x10$^3$ lbf/ft$^3$*

## Table 3G.1-13 *Results of NASTRAN Analysis, Dead Load*

| Location | Element ID | Nx (MN/m) | Ny (MN/m) | Nxy (MN/m) | Mx (MNm/m) | My (MNm/m) | Mxy (MNm/m) | Qx (MN/m) | Qy (MN/m) |
|---|---|---|---|---|---|---|---|---|---|
| 1 RPV | 5006 | 0.065 | -5.384 | 0.162 | -0.160 | -0.912 | 0.016 | -0.024 | -0.281 |
| Pedestal | 5013 | -0.339 | -6.071 | 0.256 | -0.102 | -0.561 | -0.001 | -0.013 | -0.078 |
| Bottom | 5024 | -0.695 | -6.038 | 0.010 | -0.060 | -0.421 | 0.002 | 0.010 | -0.021 |
| 2 RPV | 6006 | 0.034 | -5.281 | 0.276 | 0.009 | 0.015 | 0.030 | 0.038 | -0.039 |
| Pedestal | 6013 | -0.027 | -5.366 | 0.399 | -0.054 | -0.059 | 0.008 | -0.014 | 0.014 |
| Mid-Height | 6024 | 0.068 | -4.009 | -0.431 | 0.014 | -0.110 | 0.012 | 0.024 | 0.075 |
| 3 RPV | 6606 | 0.045 | -3.875 | 0.723 | 0.237 | 1.692 | 0.149 | 0.009 | -0.762 |
| Pedestal | 6613 | 0.020 | -3.931 | -0.043 | 0.173 | 1.595 | -0.179 | 0.021 | -0.733 |
| Top | 6624 | 0.111 | -3.789 | 0.254 | 0.201 | 1.578 | 0.183 | -0.028 | -0.710 |
| 4 RCCV | 1806 | -0.457 | -4.795 | 0.150 | -0.006 | -0.136 | 0.007 | 0.000 | 0.017 |
| Wetwell | 1813 | -0.553 | -4.710 | 0.173 | -0.017 | -0.060 | 0.002 | 0.001 | 0.058 |
| Bottom | 1824 | -0.441 | -5.244 | -0.087 | -0.017 | -0.102 | 0.003 | -0.004 | 0.037 |
| 5 RCCV | 2606 | -0.141 | -4.293 | 0.199 | 0.003 | -0.028 | 0.001 | 0.002 | -0.074 |
| Wetwell | 2613 | -0.196 | -4.314 | 0.171 | -0.026 | -0.065 | 0.002 | -0.003 | -0.039 |
| Mid-Height | 2624 | -0.225 | -4.723 | -0.043 | -0.005 | -0.023 | 0.001 | 0.000 | -0.069 |
| 6 RCCV | 3406 | -0.106 | -3.634 | 0.341 | 0.031 | 0.244 | 0.013 | 0.013 | -0.103 |
| Wetwell | 3413 | -0.014 | -4.044 | 0.130 | -0.016 | -0.082 | -0.071 | 0.023 | 0.004 |
| Top | 3424 | -0.071 | -4.073 | -0.010 | 0.005 | 0.023 | -0.008 | 0.028 | 0.003 |
| 7 RCCV | 3606 | 0.026 | -3.246 | 0.280 | -0.010 | 0.121 | 0.006 | 0.020 | 0.137 |
| Drywell | 3613 | 0.127 | -3.629 | 0.157 | 0.059 | 0.325 | -0.067 | -0.016 | 0.244 |
| Bottom | 3624 | -0.040 | -4.074 | 0.043 | 0.056 | 0.306 | -0.005 | 0.024 | 0.136 |
| 8 RCCV | 4006 | 0.492 | -2.715 | 0.192 | -0.188 | -0.472 | -0.030 | 0.015 | 0.241 |
| Drywell | 4013 | 0.508 | -3.707 | 0.278 | -0.040 | -0.379 | 0.008 | -0.009 | 0.151 |
| Mid-Height | 4976 | 0.027 | -3.328 | 0.148 | -0.001 | -0.179 | -0.004 | -0.008 | 0.103 |
| 9 RCCV | 4406 | 0.425 | -2.172 | -0.113 | -0.356 | -1.783 | -0.034 | -0.009 | 0.448 |
| Drywell | 4413 | -0.354 | -3.765 | 0.154 | -0.196 | -1.039 | 0.009 | -0.007 | 0.230 |
| Top | 4424 | 0.057 | -2.613 | 0.113 | -0.046 | -0.468 | 0.006 | 0.002 | 0.095 |
| 10 Basemat | 80003 | -0.599 | -0.812 | 0.121 | 4.906 | 5.322 | -0.041 | 0.282 | -0.229 |
| @ Center | 80007 | -0.624 | -0.836 | 0.111 | 4.925 | 5.322 | -0.039 | -0.040 | -0.366 |
| | 80012 | -0.617 | -0.881 | 0.111 | 4.917 | 5.316 | -0.037 | -0.349 | -0.054 |
| 11 Basemat | 80206 | -0.520 | -0.688 | 0.188 | 1.278 | 1.871 | 1.202 | 1.395 | -1.309 |
| Inside | 80213 | -0.621 | -0.864 | 0.198 | 2.488 | 0.272 | -0.150 | -0.073 | -1.961 |
| RPV Pedestal | 80224 | -0.696 | -1.185 | 0.106 | 0.346 | 2.665 | -0.226 | -1.804 | -0.165 |
| 12 S/P Slab | 83306 | 0.143 | 0.603 | -0.221 | 1.344 | 0.959 | -0.041 | 0.934 | -0.028 |
| @ RPV | 83313 | 0.358 | 0.483 | -0.106 | 1.366 | 0.963 | 0.038 | 0.943 | 0.030 |
| | 83324 | 0.302 | 0.633 | 0.039 | 1.339 | 0.942 | -0.043 | 0.932 | -0.030 |
| 13 S/P Slab | 83406 | 0.169 | 0.502 | -0.205 | -0.866 | 0.328 | -0.008 | 0.324 | 0.000 |
| @ Center | 83413 | 0.434 | 0.342 | -0.001 | -0.856 | 0.314 | 0.000 | 0.329 | 0.001 |
| | 83424 | 0.352 | 0.526 | -0.003 | -0.864 | 0.306 | -0.002 | 0.325 | -0.001 |
| 14 S/P Slab | 83506 | 0.190 | 0.401 | -0.199 | -0.874 | -0.026 | -0.011 | -0.139 | 0.003 |
| @ RCCV | 83513 | 0.475 | 0.294 | 0.040 | -0.893 | -0.042 | -0.002 | -0.130 | 0.003 |
| | 83524 | 0.384 | 0.489 | -0.004 | -0.891 | -0.040 | -0.002 | -0.134 | -0.001 |
| 15 Topslab | 98120 | See Table 3G.5-3 | | | | | | | |
| @ Drywell Head | 98135 | | | | | | | | |
| Opening | 98104 | | | | | | | | |
| 16 Topslab | 98149 | | | | | | | | |
| @ Center | 98170 | | | | | | | | |
| | 98109 | | | | | | | | |
| 17 Topslab | 98174 | | | | | | | | |
| @ RCCV | 98197 | | | | | | | | |
| | 98103 | | | | | | | | |

## Table 3G.1-13 Results of NASTRAN Analysis, Dead Load (Continued)

| Location | Element ID | Nx (MN/m) | Ny (MN/m) | Nxy (MN/m) | Mx (MNm/m) | My (MNm/m) | Mxy (MNm/m) | Qx (MN/m) | Qy (MN/m) |
|---|---|---|---|---|---|---|---|---|---|
| 18 Wall | 6 | 0.098 | -7.190 | 0.535 | -0.213 | -1.578 | 0.012 | -0.040 | -0.489 |
| Below RCCV | 13 | 0.236 | -5.600 | 0.423 | -0.508 | -2.681 | 0.003 | -0.006 | -0.803 |
| Bottom | 24 | 0.192 | -6.143 | -0.210 | -0.541 | -2.864 | 0.005 | 0.000 | -0.842 |
| 19 Wall | 806 | -0.043 | -6.071 | 0.154 | 0.023 | -0.035 | -0.020 | 0.010 | -0.114 |
| Below RCCV | 813 | -0.215 | -5.479 | 0.358 | -0.027 | -0.048 | -0.010 | -0.013 | -0.188 |
| Mid-Height | 824 | -0.156 | -6.049 | -0.196 | -0.031 | -0.007 | -0.006 | 0.001 | -0.205 |
| 20 Wall | 1606 | -0.601 | -5.326 | 0.084 | 0.105 | 0.505 | 0.004 | -0.004 | -0.212 |
| Below RCCV | 1613 | -0.707 | -5.191 | 0.243 | 0.097 | 0.600 | 0.003 | 0.000 | -0.254 |
| Top | 1624 | -0.592 | -5.731 | -0.141 | 0.095 | 0.563 | 0.001 | -0.006 | -0.230 |
| 21 Exterior Wall | 20011 | -0.674 | -3.865 | -0.514 | 0.058 | 0.416 | 0.012 | 0.055 | 0.178 |
| @ EL-11.50 | 20023 | -0.005 | -1.414 | -0.529 | 0.072 | -0.327 | -0.004 | -0.138 | -0.188 |
| to -10.50m | 30010 | -0.161 | -2.230 | 0.064 | -0.332 | -1.808 | 0.013 | 0.001 | 0.430 |
| | 30020 | -0.043 | -1.267 | -0.257 | 0.183 | -0.649 | -0.058 | 0.155 | 0.221 |
| | 40001 | -0.040 | -1.298 | 0.230 | 0.184 | -0.648 | 0.060 | -0.152 | 0.211 |
| | 40011 | -0.324 | -2.652 | -0.012 | -0.376 | -2.024 | -0.009 | -0.001 | 0.488 |
| 22 Exterior Wall | 22011 | 0.218 | -3.114 | 0.655 | -0.012 | 0.059 | 0.009 | -0.017 | 0.055 |
| @ EL4.65 | 22023 | 0.019 | -1.546 | -0.468 | -0.160 | -0.010 | -0.019 | 0.101 | 0.012 |
| to 6.60m | 32010 | -0.004 | -1.822 | 0.063 | 0.001 | 0.039 | 0.001 | 0.000 | -0.019 |
| | 32020 | -0.046 | -2.037 | -0.066 | -0.059 | -0.002 | -0.005 | -0.054 | -0.008 |
| | 42001 | -0.058 | -2.113 | -0.061 | -0.076 | -0.004 | 0.002 | 0.039 | -0.002 |
| | 42011 | -0.312 | -2.274 | -0.113 | -0.002 | 0.031 | -0.003 | 0.002 | -0.012 |
| 23 Exterior Wall | 24211 | -0.196 | -1.751 | 0.072 | -0.066 | -0.439 | 0.004 | -0.005 | -0.026 |
| @ EL22.50 | 24224 | -0.034 | -1.039 | 0.295 | 0.030 | -0.043 | -0.043 | -0.064 | -0.035 |
| to 24.60m | 34210 | -0.004 | -0.761 | 0.089 | 0.001 | -0.033 | 0.002 | 0.003 | 0.001 |
| | 34220 | 0.048 | -0.921 | -0.154 | 0.052 | -0.026 | -0.009 | 0.041 | 0.002 |
| | 44201 | 0.025 | -1.084 | -0.328 | 0.043 | -0.013 | 0.015 | -0.047 | -0.002 |
| 24 Basemat | 90140 | 0.240 | -0.800 | -0.158 | -1.389 | -1.121 | 2.521 | -1.759 | 2.017 |
| @ Wall | 90182 | -0.258 | -0.327 | -0.067 | 0.663 | -1.041 | -0.319 | 0.232 | 0.644 |
| Below RCCV | 90111 | -0.386 | -0.561 | 0.033 | -0.920 | 0.832 | -0.397 | 0.691 | 0.138 |
| 25 Slab | 93140 | -0.159 | 0.140 | 0.087 | 0.077 | 0.097 | -0.067 | 0.120 | -0.097 |
| EL4.65m | 93182 | 0.144 | 0.091 | 0.000 | 0.028 | 0.112 | 0.008 | -0.008 | -0.149 |
| @ RCCV | 93111 | 0.054 | 0.172 | -0.030 | 0.131 | 0.028 | 0.005 | -0.140 | -0.004 |
| 26 Slab | 96144 | -0.093 | 0.147 | 0.184 | 0.047 | 0.063 | -0.045 | 0.104 | -0.081 |
| EL17.5m | 96186 | 0.284 | -0.071 | -0.021 | -0.002 | -0.003 | -0.002 | -0.003 | -0.036 |
| @ RCCV | 96113 | -0.065 | 0.538 | -0.051 | -0.175 | 0.016 | 0.000 | 0.197 | 0.027 |
| 27 Slab | 98472 | See Table 3G.5-3 | | | | | | | |
| EL27.0m | 98514 | | | | | | | | |
| @ RCCV | 98424 | | | | | | | | |
| 28 Pool Girder | 123054 | | | | | | | | |
| @ Storage Pool | 123154 | | | | | | | | |
| 29 Pool Girder | 123062 | | | | | | | | |
| @ Well | 123162 | | | | | | | | |
| 30 Pool Girder | 123067 | | | | | | | | |
| @ Buffer Pool | 123167 | | | | | | | | |
| 31 MS Tunnel | 150122 | -0.026 | 0.046 | 0.280 | 0.022 | 0.045 | 0.016 | -0.010 | -0.043 |
| Wall and Slab | 96611 | -0.011 | 0.297 | -0.014 | 0.062 | -0.080 | -0.052 | -0.073 | 0.017 |
| | 98614 | -0.022 | -0.175 | -0.020 | 0.009 | -0.515 | -0.062 | -0.050 | 0.030 |

*S/P Slab: Suppression Pool Slab*
*SI to U.S. Customary units conversion (SI units are the controlling units and U.S. Customary units are for reference only):*
*1 MN/m = $6.852 \times 10^4$ lbf/ft*
*1 MNm/m = $2.248 \times 10^5$ lbf-ft/ft*

## Table 3G.1-14 Results of NASTRAN Analysis, Drywell Unit Pressure (1 MPa)

| Location | Element ID | Nx (MN/m) | Ny (MN/m) | Nxy (MN/m) | Mx (MNm/m) | My (MNm/m) | Mxy (MNm/m) | Qx (MN/m) | Qy (MN/m) |
|---|---|---|---|---|---|---|---|---|---|
| 1 RPV | 5006 | -3.691 | -4.672 | -0.082 | 1.293 | 7.769 | 0.037 | -0.011 | 3.421 |
| Pedestal | 5013 | -3.770 | -4.277 | -0.247 | 1.264 | 7.674 | -0.004 | -0.002 | 3.458 |
| Bottom | 5024 | -3.625 | -3.457 | 0.045 | 1.335 | 7.194 | -0.035 | 0.029 | 3.109 |
| 2 RPV | 6006 | 4.551 | -4.404 | -0.467 | -0.166 | -0.605 | -0.012 | 0.044 | -0.493 |
| Pedestal | 6013 | 4.467 | -4.273 | -0.254 | -0.166 | -0.652 | -0.012 | 0.020 | -0.489 |
| Mid-Height | 6024 | 5.180 | -2.748 | -0.354 | 0.183 | -0.345 | -0.003 | -0.054 | -0.211 |
| 3 RPV | 6606 | 2.350 | -4.275 | 0.036 | -0.252 | -1.748 | -0.293 | 0.218 | 1.030 |
| Pedestal | 6613 | 1.826 | -4.806 | -0.358 | -0.255 | -1.238 | 0.271 | -0.171 | 0.803 |
| Top | 6624 | 2.250 | -4.596 | 0.028 | -0.261 | -1.874 | -0.239 | 0.162 | 1.078 |
| 4 RCCV | 1806 | 0.548 | 3.676 | -0.563 | 0.281 | 1.664 | 0.002 | -0.001 | 0.216 |
| Wetwell | 1813 | 0.515 | 2.795 | -0.039 | 0.275 | 1.709 | -0.001 | -0.002 | 0.288 |
| Bottom | 1824 | 0.628 | 4.316 | 0.023 | 0.279 | 1.488 | -0.007 | 0.003 | 0.213 |
| 5 RCCV | 2606 | 1.528 | 3.661 | -0.616 | 0.015 | 0.513 | 0.036 | -0.001 | 0.191 |
| Wetwell | 2613 | 1.262 | 2.467 | -0.012 | 0.038 | 0.404 | -0.005 | -0.001 | 0.201 |
| Mid-Height | 2624 | 1.510 | 4.226 | -0.032 | 0.144 | 0.326 | -0.005 | 0.003 | 0.115 |
| 6 RCCV | 3406 | 4.379 | 3.739 | -0.076 | -1.035 | -5.767 | 1.331 | -1.003 | 1.977 |
| Wetwell | 3413 | 3.268 | 2.059 | -0.415 | -0.713 | -4.144 | -1.211 | 0.767 | 1.514 |
| Top | 3424 | 2.984 | 4.114 | 0.796 | -0.666 | -4.226 | 1.473 | -0.897 | 1.497 |
| 7 RCCV | 3606 | 4.452 | 7.434 | -0.030 | 0.159 | 1.050 | 1.441 | -0.405 | 1.617 |
| Drywell | 3613 | 3.451 | 5.759 | -0.371 | 0.362 | 2.279 | -1.270 | 0.152 | 2.109 |
| Bottom | 3624 | 3.474 | 9.462 | 0.715 | 0.559 | 2.851 | 1.534 | -0.152 | 1.903 |
| 8 RCCV | 4006 | 1.106 | 7.714 | 0.011 | 0.168 | 1.110 | 0.190 | 0.265 | -1.516 |
| Drywell | 4013 | 1.576 | 5.589 | 0.372 | -0.188 | 0.078 | 0.072 | -0.031 | -0.846 |
| Mid-Height | 4976 | 2.955 | 8.502 | -0.503 | 0.112 | 0.458 | 0.002 | -0.004 | -1.048 |
| 9 RCCV | 4406 | -0.543 | 7.824 | 0.931 | 1.550 | 10.450 | -0.001 | 0.047 | -2.610 |
| Drywell | 4413 | 0.388 | 5.173 | 0.469 | 1.175 | 8.382 | 0.132 | 0.071 | -2.781 |
| Top | 4424 | 2.734 | 7.187 | -0.454 | 1.209 | 7.164 | 0.053 | 0.007 | -2.128 |
| 10 Basemat | 80003 | 2.658 | 2.969 | -0.031 | -17.349 | -16.643 | 0.022 | -0.451 | 0.335 |
| @ Center | 80007 | 2.689 | 2.987 | -0.021 | -17.339 | -16.635 | 0.026 | 0.064 | 0.548 |
| | 80012 | 2.676 | 3.011 | -0.016 | -17.355 | -16.629 | 0.025 | 0.541 | 0.074 |
| 11 Basemat | 80206 | 2.759 | 2.810 | 0.000 | -12.124 | -12.134 | -1.543 | -1.227 | 0.879 |
| Inside | 80213 | 2.813 | 3.035 | -0.113 | -13.891 | -10.392 | 0.075 | -0.011 | 1.558 |
| RPV Pedestal | 80224 | 2.812 | 2.786 | -0.038 | -10.823 | -13.368 | 0.135 | 1.711 | 0.047 |
| 12 S/P Slab | 83306 | -1.210 | 0.977 | -0.125 | -3.755 | -2.157 | -0.051 | -1.320 | 0.019 |
| @ RPV | 83313 | -1.410 | 0.822 | -0.015 | -3.752 | -2.180 | 0.027 | -1.331 | -0.001 |
| | 83324 | -1.148 | 0.999 | -0.001 | -3.808 | -2.215 | 0.002 | -1.357 | -0.004 |
| 13 S/P Slab | 83406 | -0.659 | 0.353 | -0.049 | 0.528 | -1.319 | -0.039 | -0.919 | -0.001 |
| @ Center | 83413 | -0.707 | 0.337 | -0.049 | 0.526 | -1.337 | 0.011 | -0.914 | -0.002 |
| | 83424 | -0.653 | 0.347 | 0.034 | 0.514 | -1.313 | 0.006 | -0.933 | 0.000 |
| 14 S/P Slab | 83506 | -0.458 | 0.124 | -0.004 | 3.051 | -0.101 | -0.011 | -0.699 | -0.013 |
| @ RCCV | 83513 | -0.452 | 0.198 | -0.053 | 3.034 | -0.117 | 0.004 | -0.699 | 0.000 |
| | 83524 | -0.522 | 0.088 | 0.034 | 3.076 | -0.066 | 0.003 | -0.714 | 0.000 |
| 15 Topslab | 98120 | See Table 3G.5-4 | | | | | | | |
| @ Drywell Head | 98135 | | | | | | | | |
| Opening | 98104 | | | | | | | | |
| 16 Topslab | 98149 | | | | | | | | |
| @ Center | 98170 | | | | | | | | |
| | 98109 | | | | | | | | |
| 17 Topslab | 98174 | | | | | | | | |
| @ RCCV | 98197 | | | | | | | | |
| | 98103 | | | | | | | | |

## Table 3G.1-14 Results of NASTRAN Analysis, Drywell Unit Pressure (1 MPa) (Continued)

| Location | Element ID | Nx (MN/m) | Ny (MN/m) | Nxy (MN/m) | Mx (MNm/m) | My (MNm/m) | Mxy (MNm/m) | Qx (MN/m) | Qy (MN/m) |
|---|---|---|---|---|---|---|---|---|---|
| 18 Wall | 6 | -0.810 | 3.022 | -0.522 | 0.541 | 3.152 | -0.010 | 0.024 | 1.051 |
| Below RCCV | 13 | -0.629 | 2.747 | -0.123 | 0.574 | 3.274 | -0.001 | -0.001 | 1.019 |
| Bottom | 24 | -0.982 | 3.181 | 0.076 | 0.606 | 3.445 | -0.005 | 0.004 | 1.075 |
| 19 Wall | 806 | 0.124 | 3.121 | -0.449 | -0.007 | 0.032 | 0.012 | -0.010 | 0.100 |
| Below RCCV | 813 | 0.192 | 2.523 | -0.104 | -0.004 | 0.033 | 0.006 | 0.024 | 0.196 |
| Mid-Height | 824 | 0.054 | 3.361 | 0.101 | 0.024 | -0.025 | 0.004 | -0.001 | 0.181 |
| 20 Wall | 1606 | 0.822 | 3.044 | -0.486 | -0.313 | -1.810 | 0.001 | 0.000 | 0.509 |
| Below RCCV | 1613 | 0.798 | 2.208 | -0.073 | -0.319 | -1.796 | -0.004 | -0.001 | 0.541 |
| Top | 1624 | 0.875 | 3.604 | 0.068 | -0.317 | -1.988 | -0.003 | 0.003 | 0.589 |
| 21 Exterior Wall | 20011 | 0.080 | 0.612 | 0.041 | 0.209 | 0.755 | 0.015 | -0.015 | 0.226 |
| @ EL-11.50 | 20023 | 0.012 | -0.081 | -0.105 | -0.056 | 0.036 | -0.002 | 0.001 | 0.020 |
| to -10.50m | 30010 | 0.294 | -0.111 | -0.038 | 0.287 | 1.392 | -0.013 | -0.002 | -0.295 |
| | 30020 | 0.099 | -0.301 | -0.045 | -0.096 | 0.024 | 0.029 | 0.034 | 0.001 |
| | 40001 | 0.051 | -0.249 | 0.183 | -0.088 | 0.099 | -0.016 | -0.008 | -0.016 |
| | 40011 | -0.156 | 0.064 | -0.027 | 0.317 | 1.533 | 0.012 | 0.000 | -0.331 |
| 22 Exterior Wall | 22011 | 0.056 | 0.679 | -0.102 | 0.009 | 0.005 | 0.005 | 0.004 | -0.136 |
| @ EL4.65 | 22023 | -0.005 | -0.244 | -0.102 | -0.001 | 0.025 | -0.005 | 0.015 | -0.006 |
| to 6.60m | 32010 | 0.212 | 0.106 | 0.004 | 0.011 | 0.091 | 0.002 | 0.000 | 0.044 |
| | 32020 | 0.015 | -0.458 | 0.370 | 0.016 | 0.035 | -0.007 | -0.003 | 0.025 |
| | 42001 | -0.013 | -0.383 | 0.407 | 0.016 | 0.029 | -0.009 | -0.001 | 0.000 |
| | 42011 | 0.032 | 0.867 | -0.057 | 0.019 | 0.011 | 0.008 | -0.004 | 0.081 |
| 23 Exterior Wall | 24211 | 1.007 | 0.488 | -0.092 | 0.171 | 0.963 | 0.030 | 0.029 | -0.602 |
| @ EL22.50 | 24224 | 0.033 | -1.268 | -0.343 | 0.005 | 0.168 | 0.061 | 0.106 | 0.114 |
| to 24.60m | 34210 | 1.013 | 0.105 | 0.023 | -0.041 | 0.132 | 0.017 | -0.008 | 0.073 |
| | 34220 | 0.092 | -1.195 | 0.477 | 0.033 | 0.112 | 0.006 | 0.031 | -0.003 |
| | 44201 | 0.032 | -0.901 | 0.667 | 0.068 | 0.082 | -0.024 | -0.016 | -0.013 |
| 24 Basemat | 90140 | -0.181 | 0.400 | 0.822 | 2.960 | 2.403 | -3.390 | 0.332 | -0.650 |
| @ Wall | 90182 | 1.649 | 0.073 | -0.087 | -0.866 | 4.383 | 0.450 | -0.077 | -0.584 |
| Below RCCV | 90111 | 0.119 | 0.767 | -0.104 | 4.456 | -0.712 | 0.507 | -0.645 | -0.067 |
| 25 Slab | 93140 | -0.061 | 0.042 | 0.046 | 0.082 | 0.056 | -0.060 | 0.013 | -0.016 |
| EL4.65m | 93182 | 0.103 | -0.078 | 0.016 | -0.007 | 0.075 | 0.005 | 0.000 | 0.015 |
| @ RCCV | 93111 | -0.079 | 0.009 | 0.010 | 0.131 | 0.006 | 0.003 | -0.034 | -0.002 |
| 26 Slab | 96144 | 0.383 | 0.384 | 1.127 | 0.207 | 0.284 | -0.200 | 0.044 | -0.091 |
| EL17.5m | 96186 | 1.099 | -0.517 | 0.124 | 0.029 | 0.359 | -0.058 | 0.015 | -0.145 |
| @ RCCV | 96113 | -0.716 | 1.172 | 0.322 | 2.194 | 0.203 | -0.348 | -0.906 | -0.093 |
| 27 Slab | 98472 | See Table 3G.5-4 | | | | | | | |
| EL27.0m | 98514 | | | | | | | | |
| @ RCCV | 98424 | | | | | | | | |
| 28 Pool Girder | 123054 | | | | | | | | |
| @ Storage Pool | 123154 | | | | | | | | |
| 29 Pool Girder | 123062 | | | | | | | | |
| @ Well | 123162 | | | | | | | | |
| 30 Pool Girder | 123067 | | | | | | | | |
| @ Buffer Pool | 123167 | | | | | | | | |
| 31 MS Tunnel | 150122 | 0.130 | -0.696 | 0.208 | -0.004 | 0.081 | -0.012 | 0.009 | -0.069 |
| Wall and Slab | 96611 | -0.036 | 0.673 | -0.029 | -0.062 | -0.110 | -0.020 | 0.021 | 0.008 |
| | 98614 | 0.010 | -0.274 | 0.006 | -0.483 | -1.082 | -0.164 | 0.146 | 0.052 |

*S/P Slab: Suppression Pool Slab*
*SI to U.S. Customary units conversion (SI units are the controlling units and U.S. Customary units are for reference only):*
*1 MN/m = 6.852x10$^4$ lbf/ft*
*1 MNm/m = 2.248x10$^5$ lbf-ft/ft*

## Table 3G.1-15 Results of NASTRAN Analysis, Wetwell Unit Pressure (1 MPa)

| Location | Element ID | Nx (MN/m) | Ny (MN/m) | Nxy (MN/m) | Mx (MNm/m) | My (MNm/m) | Mxy (MNm/m) | Qx (MN/m) | Qy (MN/m) |
|---|---|---|---|---|---|---|---|---|---|
| 1 RPV | 5006 | -0.608 | -1.082 | 0.028 | 0.141 | 0.842 | 0.002 | 0.002 | 0.391 |
| Pedestal | 5013 | -0.617 | -0.943 | 0.105 | 0.139 | 0.834 | 0.000 | -0.001 | 0.398 |
| Bottom | 5024 | -0.646 | -0.792 | 0.023 | 0.150 | 0.865 | -0.006 | 0.003 | 0.413 |
| 2 RPV | 6006 | -0.383 | -1.217 | 0.050 | -0.018 | -0.160 | 0.005 | 0.005 | -0.061 |
| Pedestal | 6013 | -0.438 | -0.971 | 0.107 | -0.024 | -0.151 | 0.003 | -0.013 | -0.068 |
| Mid-Height | 6024 | -0.505 | -0.482 | -0.010 | -0.063 | -0.149 | -0.004 | 0.006 | -0.038 |
| 3 RPV | 6606 | 0.238 | -1.879 | 0.127 | 0.728 | 4.751 | 0.094 | 0.206 | -1.285 |
| Pedestal | 6613 | 0.381 | -1.609 | 0.122 | 0.681 | 4.526 | -0.104 | -0.184 | -1.198 |
| Top | 6624 | 0.312 | -1.185 | -0.018 | 0.734 | 4.721 | 0.086 | 0.176 | -1.277 |
| 4 RCCV | 1806 | 2.194 | 4.384 | 0.004 | 0.857 | 5.150 | 0.000 | 0.002 | 1.949 |
| Wetwell | 1813 | 2.120 | 4.040 | -0.025 | 0.850 | 5.150 | -0.006 | -0.003 | 1.978 |
| Bottom | 1824 | 2.362 | 3.999 | 0.029 | 0.824 | 5.092 | 0.013 | 0.000 | 1.973 |
| 5 RCCV | 2606 | 6.309 | 4.449 | -0.072 | -0.457 | -2.275 | -0.020 | 0.012 | -0.091 |
| Wetwell | 2613 | 5.859 | 3.894 | -0.017 | -0.474 | -2.067 | -0.002 | -0.011 | -0.061 |
| Mid-Height | 2624 | 6.107 | 3.815 | -0.012 | -0.445 | -2.084 | -0.006 | 0.005 | -0.186 |
| 6 RCCV | 3406 | 2.774 | 4.473 | -0.470 | 0.796 | 4.661 | -1.229 | 0.929 | -1.771 |
| Wetwell | 3413 | 2.772 | 3.974 | 0.483 | 0.473 | 3.728 | 1.171 | -0.714 | -1.508 |
| Top | 3424 | 2.834 | 4.000 | -0.754 | 0.795 | 4.958 | -1.376 | 0.827 | -1.853 |
| 7 RCCV | 3606 | 2.182 | 0.922 | -0.605 | -0.216 | -1.304 | -1.244 | 0.372 | -0.657 |
| Drywell | 3613 | 2.237 | 0.430 | 0.665 | -0.555 | -2.305 | 1.256 | -0.117 | -0.877 |
| Bottom | 3624 | 2.320 | -0.311 | -0.867 | -0.496 | -2.553 | -1.437 | 0.134 | -0.801 |
| 8 RCCV | 4006 | 2.016 | 0.427 | -0.178 | 0.115 | -0.582 | -0.035 | -0.224 | 0.019 |
| Drywell | 4013 | 1.579 | 0.025 | -0.032 | -0.070 | -0.172 | -0.062 | 0.029 | -0.367 |
| Mid-Height | 4976 | 1.561 | -0.253 | 0.000 | -0.037 | -0.041 | 0.006 | -0.008 | -0.368 |
| 9 RCCV | 4406 | 0.928 | -0.133 | -0.105 | 0.412 | 0.242 | 0.108 | 0.004 | -0.508 |
| Drywell | 4413 | 0.229 | -0.215 | -0.110 | 0.147 | 0.684 | -0.026 | -0.035 | -0.137 |
| Top | 4424 | 0.485 | -0.194 | 0.017 | 0.136 | 0.794 | -0.005 | -0.011 | -0.210 |
| 10 Basemat | 80003 | 0.408 | 0.436 | -0.001 | -2.029 | -1.955 | 0.012 | 0.032 | -0.004 |
| @ Center | 80007 | 0.411 | 0.432 | -0.003 | -2.005 | -1.950 | 0.016 | 0.025 | -0.008 |
| | 80012 | 0.409 | 0.426 | -0.002 | -1.993 | -1.949 | 0.013 | 0.015 | 0.000 |
| 11 Basemat | 80206 | 0.435 | 0.436 | 0.020 | -2.210 | -2.062 | 0.075 | 0.082 | -0.041 |
| Inside | 80213 | 0.431 | 0.443 | -0.001 | -2.025 | -2.105 | 0.102 | 0.079 | -0.056 |
| RPV Pedestal | 80224 | 0.429 | 0.367 | -0.011 | -1.958 | -2.001 | 0.003 | 0.007 | -0.012 |
| 12 S/P Slab | 83306 | 1.804 | 1.743 | -0.093 | -0.725 | 1.218 | -0.004 | 4.169 | -0.060 |
| @ RPV | 83313 | 1.989 | 1.716 | 0.091 | -0.648 | 1.243 | -0.017 | 4.194 | 0.064 |
| | 83324 | 1.727 | 1.771 | -0.024 | -0.666 | 1.259 | -0.001 | 4.192 | -0.057 |
| 13 S/P Slab | 83406 | 1.883 | 1.764 | -0.040 | -6.216 | -1.484 | -0.011 | -0.326 | 0.000 |
| @ Center | 83413 | 2.058 | 1.708 | 0.041 | -6.190 | -1.474 | -0.013 | -0.318 | 0.001 |
| | 83424 | 1.865 | 1.847 | -0.004 | -6.201 | -1.466 | 0.002 | -0.316 | 0.001 |
| 14 S/P Slab | 83506 | 1.884 | 1.742 | -0.017 | 2.774 | -0.378 | -0.008 | -3.774 | -0.003 |
| @ RCCV | 83513 | 2.059 | 1.735 | 0.037 | 2.786 | -0.377 | -0.002 | -3.771 | -0.002 |
| | 83524 | 1.940 | 1.900 | -0.020 | 2.768 | -0.371 | -0.001 | -3.769 | 0.003 |
| 15 Topslab | 98120 | See Table 3G.5-5 | | | | | | | |
| @ Drywell Head | 98135 | | | | | | | | |
| Opening | 98104 | | | | | | | | |
| 16 Topslab | 98149 | | | | | | | | |
| @ Center | 98170 | | | | | | | | |
| | 98109 | | | | | | | | |
| 17 Topslab | 98174 | | | | | | | | |
| @ RCCV | 98197 | | | | | | | | |
| | 98103 | | | | | | | | |

## Table 3G.1-15 Results of NASTRAN Analysis, Wetwell Unit Pressure (1 MPa) (Continued)

| Location | Element ID | Nx (MN/m) | Ny (MN/m) | Nxy (MN/m) | Mx (MNm/m) | My (MNm/m) | Mxy (MNm/m) | Qx (MN/m) | Qy (MN/m) |
|---|---|---|---|---|---|---|---|---|---|
| 18 Wall | 6 | -0.242 | 0.189 | -0.086 | 0.105 | 0.634 | -0.004 | 0.007 | 0.193 |
| Below RCCV | 13 | -0.221 | -0.024 | -0.050 | 0.131 | 0.728 | 0.000 | 0.000 | 0.218 |
| Bottom | 24 | -0.279 | -0.069 | 0.036 | 0.135 | 0.761 | -0.001 | 0.001 | 0.230 |
| 19 Wall | 806 | 0.151 | 0.148 | 0.020 | 0.041 | 0.234 | 0.012 | 0.001 | -0.019 |
| Below RCCV | 813 | 0.194 | -0.064 | -0.019 | 0.066 | 0.253 | 0.004 | 0.004 | 0.015 |
| Mid-Height | 824 | 0.168 | -0.093 | 0.037 | 0.047 | 0.251 | 0.000 | -0.001 | 0.024 |
| 20 Wall | 1606 | 1.582 | 0.093 | 0.009 | -0.454 | -2.619 | 0.000 | 0.002 | 0.845 |
| Below RCCV | 1613 | 1.552 | -0.184 | -0.020 | -0.468 | -2.683 | -0.005 | -0.002 | 0.910 |
| Top | 1624 | 1.745 | -0.225 | 0.024 | -0.492 | -2.729 | 0.008 | -0.001 | 0.940 |
| 21 Exterior Wall | 20011 | 0.133 | 0.521 | 0.020 | 0.083 | 0.315 | 0.007 | -0.020 | 0.103 |
| @ EL-11.50 | 20023 | 0.002 | -0.002 | -0.017 | -0.025 | 0.039 | 0.000 | 0.014 | 0.019 |
| to -10.50m | 30010 | 0.183 | 0.305 | 0.001 | 0.100 | 0.533 | -0.003 | -0.002 | -0.112 |
| | 30020 | 0.026 | -0.145 | -0.023 | -0.045 | 0.042 | 0.013 | 0.003 | -0.008 |
| | 40001 | 0.016 | -0.132 | 0.058 | -0.045 | 0.059 | -0.009 | 0.002 | -0.013 |
| | 40011 | 0.124 | 0.354 | 0.022 | 0.108 | 0.582 | 0.003 | 0.002 | -0.125 |
| 22 Exterior Wall | 22011 | 0.988 | 0.289 | -0.103 | -0.002 | 0.134 | 0.004 | -0.015 | 0.308 |
| @ EL4.65 | 22023 | 0.115 | 0.345 | 0.199 | 0.296 | 0.060 | -0.058 | -0.101 | -0.013 |
| to 6.60m | 32010 | 1.121 | 0.165 | -0.061 | -0.014 | 0.105 | 0.016 | -0.001 | -0.304 |
| | 32020 | 0.106 | 0.608 | 0.254 | 0.219 | 0.042 | -0.106 | 0.154 | 0.013 |
| | 42001 | 0.146 | 0.653 | -0.054 | 0.288 | 0.041 | 0.041 | -0.106 | 0.021 |
| | 42011 | 1.033 | 0.244 | 0.147 | -0.054 | 0.070 | -0.025 | 0.003 | -0.295 |
| 23 Exterior Wall | 24211 | 0.420 | 0.462 | 0.004 | 0.033 | 0.220 | -0.002 | -0.005 | -0.016 |
| @ EL22.50 | 24224 | 0.020 | 0.304 | -0.156 | -0.040 | -0.051 | 0.014 | 0.000 | -0.065 |
| to 24.60m | 34210 | 0.476 | 0.175 | 0.002 | 0.014 | 0.165 | -0.019 | 0.002 | 0.032 |
| | 34220 | -0.020 | 0.130 | 0.004 | -0.014 | 0.029 | 0.017 | -0.029 | -0.015 |
| | 44201 | -0.014 | 0.151 | 0.117 | -0.008 | 0.021 | -0.012 | 0.030 | -0.009 |
| 24 Basemat | 90140 | 0.066 | 0.126 | 0.143 | 0.061 | 0.036 | -0.432 | -0.083 | 0.008 |
| @ Wall | 90182 | 0.335 | 0.102 | 0.010 | -0.304 | 0.000 | 0.061 | -0.005 | 0.272 |
| Below RCCV | 90111 | 0.101 | 0.245 | -0.016 | -0.086 | -0.321 | 0.074 | 0.319 | 0.006 |
| 25 Slab | 93140 | 0.301 | 0.395 | 0.345 | 0.058 | 0.044 | -0.052 | 0.002 | -0.003 |
| EL4.65m | 93182 | 0.688 | 0.229 | -0.053 | -0.007 | 0.087 | 0.005 | 0.002 | 0.067 |
| @ RCCV | 93111 | 0.237 | 0.673 | -0.131 | 0.061 | -0.014 | -0.001 | 0.060 | -0.001 |
| 26 Slab | 96144 | -0.062 | 0.902 | 0.406 | 0.038 | -0.087 | 0.044 | 0.008 | 0.024 |
| EL17.5m | 96186 | 0.854 | -0.302 | -0.427 | 0.019 | -0.019 | 0.075 | -0.023 | -0.107 |
| @ RCCV | 96113 | -0.512 | 1.384 | -0.705 | -0.863 | -0.011 | 0.377 | 0.042 | 0.027 |
| 27 Slab | 98472 | See Table 3G.5-5 | | | | | | | |
| EL27.0m | 98514 | | | | | | | | |
| @ RCCV | 98424 | | | | | | | | |
| 28 Pool Girder | 123054 | | | | | | | | |
| @ Storage Pool | 123154 | | | | | | | | |
| 29 Pool Girder | 123062 | | | | | | | | |
| @ Well | 123162 | | | | | | | | |
| 30 Pool Girder | 123067 | | | | | | | | |
| @ Buffer Pool | 123167 | | | | | | | | |
| 31 MS Tunnel | 150122 | 0.012 | -0.082 | -0.008 | -0.007 | 0.018 | 0.006 | 0.001 | -0.004 |
| Wall and Slab | 96611 | -0.069 | 0.450 | -0.054 | 0.004 | -0.027 | 0.005 | 0.001 | 0.000 |
| | 98614 | 0.009 | -0.135 | 0.006 | -0.049 | -0.086 | -0.019 | 0.013 | 0.005 |

*S/P Slab: Suppression Pool Slab*
*SI to U.S. Customary units conversion (SI units are the controlling units and U.S. Customary units are for reference only):*
*1 MN/m = $6.852 \times 10^4$ lbf/ft*
*1 MNm/m = $2.248 \times 10^5$ lbf-ft/ft*

## Table 3G.1-16 Results of NASTRAN Analysis, Thermal Load (Normal Operation: Winter)

| Location | Element ID | Nx (MN/m) | Ny (MN/m) | Nxy (MN/m) | Mx (MNm/m) | My (MNm/m) | Mxy (MNm/m) | Qx (MN/m) | Qy (MN/m) |
|---|---|---|---|---|---|---|---|---|---|
| 1 RPV | 5006 | -3.414 | -0.437 | -0.228 | -5.952 | -6.232 | -0.029 | 0.060 | 0.693 |
| Pedestal | 5013 | -3.146 | -0.241 | -0.176 | -6.047 | -6.552 | -0.004 | 0.031 | 0.609 |
| Bottom | 5024 | -3.281 | -0.093 | -0.019 | -6.099 | -6.210 | -0.018 | -0.023 | 0.615 |
| 2 RPV | 6006 | -1.875 | -0.191 | 0.024 | -5.727 | -5.302 | 0.158 | 0.038 | -0.715 |
| Pedestal | 6013 | -1.957 | -0.333 | -0.227 | -5.832 | -5.203 | -0.029 | -0.014 | -0.829 |
| Mid-Height | 6024 | -2.018 | -0.147 | -0.008 | -6.491 | -3.983 | -0.231 | 0.008 | -0.730 |
| 3 RPV | 6606 | -0.858 | -0.117 | 0.191 | -5.574 | -3.404 | 0.002 | -0.384 | -1.766 |
| Pedestal | 6613 | -0.634 | -0.136 | -0.213 | -5.548 | -3.423 | 0.039 | 0.446 | -1.793 |
| Top | 6624 | -0.505 | -0.240 | 0.051 | -5.515 | -3.228 | 0.021 | -0.592 | -1.763 |
| 4 RCCV | 1806 | -2.364 | -1.092 | -0.393 | -3.686 | -5.547 | 0.063 | 0.068 | -0.442 |
| Wetwell | 1813 | -2.821 | -3.328 | -0.369 | -3.574 | -5.568 | -0.014 | -0.006 | -0.440 |
| Bottom | 1824 | -2.275 | -3.899 | -0.016 | -3.677 | -5.571 | 0.012 | -0.055 | -0.438 |
| 5 RCCV | 2606 | -2.866 | -1.303 | -0.392 | -3.019 | -2.343 | -0.006 | 0.052 | -0.092 |
| Wetwell | 2613 | -4.048 | -4.123 | -0.086 | -2.641 | -1.955 | 0.004 | -0.051 | 0.067 |
| Mid-Height | 2624 | -3.423 | -4.642 | -0.097 | -2.943 | -2.007 | -0.020 | 0.049 | 0.035 |
| 6 RCCV | 3406 | 0.492 | -1.701 | 0.000 | -3.082 | -3.562 | -0.094 | 0.191 | 0.555 |
| Wetwell | 3413 | -1.540 | -5.098 | 0.249 | -2.834 | -3.203 | 0.001 | 0.007 | 0.537 |
| Top | 3424 | 0.135 | -5.952 | 0.243 | -2.665 | -1.585 | -0.007 | 0.000 | 0.021 |
| 7 RCCV | 3606 | -2.410 | -1.874 | -0.297 | -4.072 | -4.078 | 0.067 | 0.185 | 0.021 |
| Drywell | 3613 | -1.820 | -5.897 | 0.873 | -2.990 | -2.673 | -0.069 | -0.021 | 0.188 |
| Bottom | 3624 | -13.505 | -7.187 | 0.027 | 0.195 | 1.095 | 0.041 | 0.025 | 1.816 |
| 8 RCCV | 4006 | 0.447 | -1.590 | 0.301 | -4.004 | -3.956 | 0.072 | 0.027 | -0.043 |
| Drywell | 4013 | 0.903 | -6.938 | 0.768 | -3.142 | -2.965 | 0.023 | -0.090 | 0.112 |
| Mid-Height | 4976 | -8.133 | -6.545 | 0.419 | -0.449 | -1.750 | 0.005 | 0.009 | -0.181 |
| 9 RCCV | 4406 | 4.600 | -0.749 | 0.402 | -4.043 | -4.593 | 0.240 | 0.298 | 0.471 |
| Drywell | 4413 | 0.766 | -7.522 | -0.121 | -3.419 | -4.182 | 0.246 | -0.067 | 0.633 |
| Top | 4424 | -8.592 | -5.731 | 0.628 | 0.047 | 0.691 | -0.018 | -0.019 | -1.557 |
| 10 Basemat | 80003 | -4.765 | -5.524 | 0.028 | -7.912 | -7.859 | -0.046 | 0.022 | -0.007 |
| @ Center | 80007 | -4.791 | -5.484 | 0.065 | -7.884 | -7.854 | -0.043 | 0.019 | -0.008 |
| | 80012 | -4.795 | -5.414 | 0.049 | -7.873 | -7.859 | -0.039 | 0.014 | 0.000 |
| 11 Basemat | 80206 | -4.774 | -5.871 | 0.133 | -8.328 | -8.170 | -0.037 | 0.012 | -0.033 |
| Inside | 80213 | -4.985 | -5.528 | 0.163 | -8.093 | -8.299 | -0.201 | -0.065 | -0.074 |
| RPV Pedestal | 80224 | -4.885 | -5.287 | 0.089 | -8.086 | -7.944 | -0.042 | -0.046 | 0.008 |
| 12 S/P Slab | 83306 | -5.525 | -1.106 | -0.056 | -2.905 | -2.636 | 0.001 | 0.174 | -0.008 |
| @ RPV | 83313 | -5.868 | -0.744 | 0.011 | -2.878 | -2.650 | -0.020 | 0.210 | 0.008 |
| | 83324 | -5.754 | -0.559 | 0.371 | -2.799 | -2.576 | -0.007 | 0.259 | 0.008 |
| 13 S/P Slab | 83406 | -4.135 | -2.452 | -0.298 | -3.149 | -2.794 | -0.008 | 0.095 | 0.006 |
| @ Center | 83413 | -4.776 | -1.972 | 0.275 | -3.253 | -2.844 | -0.009 | 0.146 | -0.001 |
| | 83424 | -4.435 | -1.799 | 0.040 | -3.257 | -2.800 | -0.001 | 0.166 | -0.001 |
| 14 S/P Slab | 83506 | -3.428 | -2.905 | -0.271 | -3.337 | -2.977 | -0.028 | 0.042 | 0.008 |
| @ RCCV | 83513 | -4.174 | -2.746 | 0.323 | -3.676 | -3.030 | -0.006 | 0.144 | 0.002 |
| | 83524 | -3.662 | -2.334 | -0.010 | -3.675 | -3.022 | 0.013 | 0.132 | -0.005 |
| 15 Topslab | 98120 | -8.250 | -6.148 | -4.390 | 1.179 | 1.118 | 1.034 | 0.015 | 0.125 |
| @ Drywell Head | 98135 | -12.847 | -3.720 | 2.344 | 2.076 | 0.076 | -0.350 | 0.159 | -0.065 |
| Opening | 98104 | -3.426 | -7.468 | 2.585 | 0.228 | 2.116 | -0.471 | 0.061 | -0.121 |
| 16 Topslab | 98149 | -8.128 | -5.389 | -1.915 | 1.754 | 1.864 | 0.380 | 0.073 | 0.276 |
| @ Center | 98170 | -8.549 | -5.044 | -0.673 | 1.759 | 2.872 | -0.007 | 0.032 | 0.317 |
| | 98109 | -7.315 | -4.905 | 1.127 | 1.235 | 1.959 | 0.002 | 0.227 | -0.049 |
| 17 Topslab | 98174 | -6.914 | -5.095 | -0.760 | 2.420 | 3.569 | 0.007 | -0.253 | 0.688 |
| @ RCCV | 98197 | -10.272 | -4.984 | -0.945 | 1.536 | 2.498 | 0.194 | 0.164 | -0.574 |
| | 98103 | -8.143 | -5.630 | -0.071 | 3.116 | 2.695 | 0.101 | 0.446 | 0.082 |

## Table 3G.1-16 Results of NASTRAN Analysis, Thermal Load (Normal Operation: Winter) (Continued)

| Location | Element ID | Nx (MN/m) | Ny (MN/m) | Nxy (MN/m) | Mx (MNm/m) | My (MNm/m) | Mxy (MNm/m) | Qx (MN/m) | Qy (MN/m) |
|---|---|---|---|---|---|---|---|---|---|
| 18 Wall | 6 | 1.253 | -0.205 | -0.568 | 0.076 | 0.906 | -0.033 | 0.012 | 0.034 |
| Below RCCV | 13 | 0.384 | -2.513 | -0.655 | 0.359 | 2.031 | -0.003 | 0.018 | 0.443 |
| Bottom | 24 | 0.608 | -2.607 | 0.109 | 0.369 | 2.061 | -0.004 | -0.001 | 0.459 |
| 19 Wall | 806 | 1.106 | -0.949 | 0.087 | 0.125 | 0.770 | 0.068 | -0.045 | 0.040 |
| Below RCCV | 813 | 0.616 | -2.464 | -0.504 | 0.086 | 0.776 | -0.022 | 0.007 | 0.463 |
| Mid-Height | 824 | 0.476 | -2.699 | 0.077 | 0.100 | 0.784 | 0.014 | 0.008 | 0.416 |
| 20 Wall | 1606 | 6.930 | -1.551 | 0.139 | -0.385 | -1.749 | 0.078 | 0.068 | 1.318 |
| Below RCCV | 1613 | 6.711 | -2.791 | -0.408 | -0.489 | -2.841 | -0.003 | -0.010 | 1.707 |
| Top | 1624 | 7.196 | -3.509 | -0.106 | -0.548 | -2.794 | -0.004 | -0.051 | 1.745 |
| 21 Exterior Wall | 20011 | 2.857 | 2.770 | 0.707 | 0.218 | 0.937 | 0.029 | -0.143 | 0.275 |
| @ EL-11.50 | 20023 | -1.456 | -1.248 | 1.649 | 1.953 | 3.881 | 0.188 | 0.289 | 0.632 |
| to -10.50m | 30010 | 0.135 | 2.273 | -0.121 | 1.014 | 3.199 | -0.017 | -0.023 | -0.559 |
| | 30020 | -0.118 | -1.019 | -0.219 | 0.131 | 1.084 | 0.109 | -0.030 | -0.275 |
| | 40001 | -0.158 | -0.676 | -0.073 | 0.169 | 1.184 | -0.072 | 0.112 | -0.307 |
| | 40011 | 0.784 | 2.397 | 0.042 | 1.004 | 3.271 | 0.007 | 0.011 | -0.589 |
| 22 Exterior Wall | 22011 | 1.989 | 2.366 | -0.092 | -0.078 | -0.066 | 0.029 | 0.015 | 0.113 |
| @ EL4.65 | 22023 | 1.813 | -4.077 | -2.023 | -0.288 | 0.359 | -0.041 | 0.709 | 0.422 |
| to 6.60m | 32010 | 12.350 | 5.928 | 0.012 | -2.697 | -2.528 | -0.002 | -0.002 | -0.174 |
| | 32020 | 0.311 | 4.027 | 2.287 | -0.573 | -1.830 | -0.392 | 0.720 | 0.111 |
| | 42001 | 2.250 | 2.855 | 2.390 | -0.736 | -1.651 | -0.048 | -0.662 | -0.269 |
| | 42011 | 10.751 | 3.992 | 0.063 | -2.795 | -2.458 | 0.078 | 0.067 | -0.089 |
| 23 Exterior Wall | 24211 | 2.843 | 1.959 | -0.374 | -0.012 | 0.038 | 0.010 | -0.116 | 1.643 |
| @ EL22.50 | 24224 | 0.119 | 3.714 | -3.310 | 0.641 | -0.241 | -0.550 | -0.622 | -0.226 |
| to 24.60m | 34210 | 13.386 | 4.447 | -0.429 | -2.795 | -2.685 | 0.027 | -0.009 | -0.153 |
| | 34220 | 1.581 | 3.765 | 2.292 | 0.666 | -1.618 | -0.429 | 1.495 | 0.117 |
| | 44201 | 0.865 | 4.461 | -0.102 | 0.302 | -1.803 | 0.423 | -1.817 | 0.106 |
| 24 Basemat | 90140 | 1.036 | 1.410 | 1.316 | 1.084 | 0.020 | -1.021 | -0.512 | -0.135 |
| @ Wall | 90182 | 1.427 | 0.428 | 0.598 | -0.072 | -3.082 | 0.173 | -0.153 | 2.372 |
| Below RCCV | 90111 | 0.529 | 2.358 | -0.001 | -3.379 | -0.412 | 0.034 | 2.474 | 0.116 |
| 25 Slab | 93140 | -0.743 | 1.592 | 2.634 | -0.402 | -0.313 | 0.220 | -0.105 | 0.085 |
| EL4.65m | 93182 | 2.346 | -2.693 | -0.779 | -0.292 | -1.483 | -0.064 | 0.061 | 1.096 |
| @ RCCV | 93111 | -2.387 | 2.996 | -0.082 | -1.455 | -0.268 | -0.037 | 0.959 | 0.002 |
| 26 Slab | 96144 | 0.039 | 2.670 | 2.994 | -0.152 | -0.132 | 0.104 | -0.028 | 0.043 |
| EL17.5m | 96186 | 2.697 | -1.893 | -1.089 | -0.101 | -0.480 | -0.033 | 0.018 | 0.387 |
| @ RCCV | 96113 | -4.345 | -3.845 | -0.732 | -3.635 | -2.664 | -0.140 | 0.735 | -0.030 |
| 27 Slab | 98472 | -0.491 | -0.852 | 4.524 | -0.425 | -0.142 | -0.156 | 0.325 | -0.431 |
| EL27.0m | 98514 | -0.578 | -2.449 | -1.119 | -0.530 | -0.406 | -0.021 | 0.038 | -0.376 |
| @ RCCV | 98424 | -8.688 | -9.621 | -1.242 | 0.386 | -0.509 | 0.134 | -5.159 | -0.068 |
| 28 Pool Girder | 123054 | 0.578 | -3.049 | 1.386 | 2.219 | 2.152 | 0.031 | -0.307 | 0.546 |
| @ Storage Pool | 123154 | 0.882 | 0.664 | -0.264 | 1.850 | 1.112 | -0.331 | -0.107 | 0.233 |
| 29 Pool Girder | 123062 | -2.848 | -0.161 | -0.520 | 0.096 | 0.138 | 0.035 | -0.092 | 0.076 |
| @ Well | 123162 | -2.548 | -0.130 | -0.518 | 0.072 | -0.199 | 0.056 | -0.181 | 0.097 |
| 30 Pool Girder | 123067 | -3.044 | -4.728 | -1.664 | 0.540 | 0.402 | -0.076 | -0.115 | 0.516 |
| @ Buffer Pool | 123167 | -2.836 | -2.339 | -2.121 | 0.175 | -0.523 | -0.229 | 0.021 | 0.153 |
| 31 MS Tunnel | 150122 | 0.267 | -0.536 | 1.825 | 1.079 | 3.149 | -0.033 | -0.584 | 0.414 |
| Wall and Slab | 96611 | -0.243 | 2.761 | -0.171 | -1.125 | -6.749 | -0.368 | 0.367 | 0.185 |
| | 98614 | -0.176 | 2.269 | -0.136 | -0.720 | -10.191 | 0.037 | 0.428 | 0.285 |

*S/P Slab: Suppression Pool Slab*
*SI to U.S. Customary units conversion (SI units are the controlling units and U.S. Customary units are for reference only):*
*1 MN/m = $6.852 \times 10^4$ lbf/ft*
*1 MNm/m = $2.248 \times 10^5$ lbf-ft/ft*

## Table 3G.1-17 Results of NASTRAN Analysis, Thermal Load (LOCA After 6 minutes: Winter)

| Location | Element ID | Nx (MN/m) | Ny (MN/m) | Nxy (MN/m) | Mx (MNm/m) | My (MNm/m) | Mxy (MNm/m) | Qx (MN/m) | Qy (MN/m) |
|---|---|---|---|---|---|---|---|---|---|
| 1 RPV | 5006 | -3.476 | 1.649 | -0.329 | -6.696 | -6.462 | -0.046 | 0.105 | 1.012 |
| Pedestal | 5013 | -3.121 | 1.796 | -0.097 | -6.854 | -6.851 | -0.006 | 0.027 | 0.925 |
| Bottom | 5024 | -3.419 | 1.892 | -0.003 | -6.894 | -6.129 | -0.026 | -0.036 | 1.045 |
| 2 RPV | 6006 | 0.080 | 1.775 | 0.154 | -6.175 | -4.043 | 0.264 | 0.065 | -1.515 |
| Pedestal | 6013 | -0.061 | 1.444 | -0.177 | -6.419 | -3.904 | -0.057 | -0.026 | -1.669 |
| Mid-Height | 6024 | -0.245 | 2.050 | 0.059 | -7.408 | -2.297 | -0.304 | -0.003 | -1.547 |
| 3 RPV | 6606 | 20.997 | 2.192 | 0.564 | -6.643 | -5.510 | -0.035 | -1.941 | 0.870 |
| Pedestal | 6613 | 21.088 | 1.964 | -0.425 | -6.702 | -5.546 | 0.139 | 2.063 | 0.862 |
| Top | 6624 | 21.900 | 2.601 | 0.228 | -6.671 | -5.665 | 0.005 | -2.338 | 1.055 |
| 4 RCCV | 1806 | 2.533 | 0.468 | -0.194 | -4.438 | -8.138 | 0.077 | 0.083 | -1.750 |
| Wetwell | 1813 | 1.866 | -2.167 | -0.420 | -4.274 | -7.773 | -0.025 | -0.007 | -1.523 |
| Bottom | 1824 | 2.926 | -2.481 | 0.046 | -4.432 | -8.134 | 0.020 | -0.085 | -1.667 |
| 5 RCCV | 2606 | 1.379 | 0.586 | -0.171 | -3.308 | -1.033 | 0.018 | 0.039 | 0.074 |
| Wetwell | 2613 | 0.111 | -2.544 | -0.109 | -3.090 | -1.052 | 0.009 | -0.075 | 0.370 |
| Mid-Height | 2624 | 0.965 | -2.909 | -0.087 | -3.293 | -0.935 | -0.026 | 0.067 | 0.189 |
| 6 RCCV | 3406 | 11.723 | 1.461 | 0.327 | -4.151 | -8.468 | -0.227 | 0.461 | 3.349 |
| Wetwell | 3413 | 8.032 | -3.439 | 0.044 | -4.382 | -9.151 | -0.402 | 0.538 | 3.335 |
| Top | 3424 | 10.292 | -4.166 | 0.471 | -3.681 | -5.045 | -0.039 | -0.006 | 2.165 |
| 7 RCCV | 3606 | 8.504 | 1.377 | 0.674 | -5.342 | -9.036 | 0.607 | 0.534 | -1.980 |
| Drywell | 3613 | 4.607 | -4.161 | 1.005 | -4.955 | -6.227 | -0.363 | 0.317 | -0.820 |
| Bottom | 3624 | -4.291 | -6.043 | 0.252 | -0.934 | -2.498 | 0.068 | 0.000 | 0.351 |
| 8 RCCV | 4006 | 5.952 | 2.178 | 0.212 | -5.110 | -5.057 | 0.011 | -0.126 | -0.683 |
| Drywell | 4013 | 4.287 | -5.850 | 1.041 | -4.672 | -4.289 | 0.014 | -0.132 | -0.308 |
| Mid-Height | 4976 | -2.660 | -5.335 | 0.580 | -0.954 | -1.780 | 0.003 | 0.013 | -0.584 |
| 9 RCCV | 4406 | 6.433 | 1.711 | -0.232 | -4.475 | -3.816 | 0.299 | 0.087 | -0.150 |
| Drywell | 4413 | 0.711 | -6.632 | -0.292 | -4.753 | -4.467 | 0.253 | -0.243 | 0.643 |
| Top | 4424 | -5.846 | -4.171 | 0.767 | -0.363 | 1.129 | -0.024 | -0.022 | -1.462 |
| 10 Basemat | 80003 | -4.270 | -5.140 | 0.021 | -8.130 | -8.102 | -0.039 | 0.029 | -0.008 |
| @ Center | 80007 | -4.296 | -5.104 | 0.056 | -8.096 | -8.099 | -0.037 | 0.028 | -0.009 |
| | 80012 | -4.302 | -5.040 | 0.042 | -8.079 | -8.109 | -0.032 | 0.024 | -0.001 |
| 11 Basemat | 80206 | -4.260 | -5.523 | 0.137 | -8.575 | -8.460 | 0.003 | 0.005 | -0.035 |
| Inside | 80213 | -4.445 | -5.127 | 0.161 | -8.289 | -8.565 | -0.151 | -0.018 | -0.103 |
| RPV Pedestal | 80224 | -4.372 | -4.948 | 0.081 | -8.177 | -8.193 | -0.045 | -0.038 | 0.010 |
| 12 S/P Slab | 83306 | -10.607 | 10.981 | 0.454 | -4.700 | -2.770 | 0.032 | -0.288 | 0.000 |
| @ RPV | 83313 | -10.822 | 11.242 | -0.850 | -4.737 | -2.848 | -0.039 | -0.302 | -0.028 |
| | 83324 | -10.702 | 11.862 | 1.279 | -4.487 | -2.654 | 0.006 | -0.156 | 0.046 |
| 13 S/P Slab | 83406 | -6.490 | 4.881 | -0.530 | -3.815 | -3.181 | -0.001 | -0.306 | 0.016 |
| @ Center | 83413 | -6.986 | 5.307 | 0.315 | -3.900 | -3.257 | -0.015 | -0.278 | -0.011 |
| | 83424 | -6.630 | 5.823 | 0.078 | -3.895 | -3.148 | -0.003 | -0.210 | 0.009 |
| 14 S/P Slab | 83506 | -3.948 | 2.320 | -0.446 | -2.906 | -3.131 | -0.038 | -0.275 | 0.016 |
| @ RCCV | 83513 | -4.567 | 2.419 | 0.440 | -3.190 | -3.174 | -0.008 | -0.192 | -0.001 |
| | 83524 | -4.038 | 3.201 | -0.017 | -3.278 | -3.153 | 0.013 | -0.168 | -0.005 |
| 15 Topslab | 98120 | -7.068 | -4.258 | -0.770 | 0.956 | 0.732 | 2.765 | -0.161 | -0.002 |
| @ Drywell Head | 98135 | -8.729 | -5.283 | 0.235 | 3.147 | -2.057 | -1.132 | 0.380 | -0.267 |
| Opening | 98104 | -4.999 | -1.752 | 0.585 | -1.461 | 3.712 | -1.500 | 0.185 | -0.214 |
| 16 Topslab | 98149 | -6.075 | -2.540 | -1.137 | 2.229 | 2.310 | 0.496 | 0.037 | 0.048 |
| @ Center | 98170 | -5.510 | -3.566 | -1.042 | 2.141 | 2.864 | -0.042 | 0.030 | 0.389 |
| | 98109 | -6.256 | -0.887 | 0.773 | 1.219 | 2.564 | -0.119 | 0.329 | -0.005 |
| 17 Topslab | 98174 | -4.871 | -2.689 | -0.476 | 2.352 | 3.211 | 0.255 | -0.023 | 0.434 |
| @ RCCV | 98197 | -7.584 | -2.926 | -1.360 | 1.917 | 3.110 | 0.130 | 0.154 | -0.447 |
| | 98103 | -6.577 | -2.458 | -0.070 | 3.431 | 3.308 | 0.118 | 0.450 | 0.084 |

## Table 3G.1-17 Results of NASTRAN Analysis, Thermal Load (LOCA After 6 minutes: Winter) (Continued)

| Location | Element ID | Nx (MN/m) | Ny (MN/m) | Nxy (MN/m) | Mx (MNm/m) | My (MNm/m) | Mxy (MNm/m) | Qx (MN/m) | Qy (MN/m) |
|---|---|---|---|---|---|---|---|---|---|
| 18 Wall | 6 | 1.177 | -0.473 | -0.669 | 0.101 | 1.063 | -0.040 | 0.024 | 0.044 |
| Below RCCV | 13 | 0.307 | -3.027 | -0.689 | 0.408 | 2.284 | -0.002 | 0.019 | 0.475 |
| Bottom | 24 | 0.412 | -3.041 | 0.146 | 0.425 | 2.350 | -0.005 | -0.002 | 0.516 |
| 19 Wall | 806 | 1.601 | -1.332 | 0.182 | 0.235 | 1.292 | 0.083 | -0.053 | -0.063 |
| Below RCCV | 813 | 1.036 | -2.990 | -0.508 | 0.175 | 1.290 | -0.027 | 0.006 | 0.450 |
| Mid-Height | 824 | 0.890 | -3.046 | 0.126 | 0.176 | 1.306 | 0.019 | 0.010 | 0.396 |
| 20 Wall | 1606 | 11.606 | -2.042 | 0.301 | -0.668 | -3.250 | 0.099 | 0.085 | 2.306 |
| Below RCCV | 1613 | 11.229 | -3.474 | -0.425 | -0.785 | -4.386 | -0.008 | -0.014 | 2.714 |
| Top | 1624 | 12.187 | -3.970 | -0.124 | -0.867 | -4.480 | -0.001 | -0.082 | 2.817 |
| 21 Exterior Wall | 20011 | 3.023 | 3.384 | 0.790 | 0.274 | 1.136 | 0.041 | -0.173 | 0.330 |
| @ EL-11.50 | 20023 | -1.459 | -1.215 | 1.590 | 1.936 | 3.930 | 0.184 | 0.310 | 0.647 |
| to -10.50m | 30010 | 0.421 | 2.641 | -0.135 | 1.081 | 3.585 | -0.018 | -0.024 | -0.601 |
| | 30020 | -0.090 | -1.196 | -0.238 | 0.081 | 1.104 | 0.123 | -0.022 | -0.270 |
| | 40001 | -0.154 | -0.831 | 0.014 | 0.123 | 1.237 | -0.081 | 0.114 | -0.310 |
| | 40011 | 0.865 | 2.785 | 0.044 | 1.075 | 3.674 | 0.007 | 0.012 | -0.638 |
| 22 Exterior Wall | 22011 | 3.577 | 2.789 | -0.075 | -0.128 | -0.161 | 0.049 | 0.032 | -0.031 |
| @ EL4.65 | 22023 | 1.984 | -3.558 | -1.991 | 0.092 | 0.423 | -0.047 | 0.570 | 0.405 |
| to 6.60m | 32010 | 14.408 | 6.124 | 0.009 | -2.798 | -2.759 | 0.004 | -0.008 | 0.040 |
| | 32020 | 0.445 | 4.720 | 2.524 | -0.285 | -1.833 | -0.377 | 0.922 | 0.167 |
| | 42001 | 2.451 | 3.607 | 2.534 | -0.371 | -1.611 | -0.058 | -0.794 | -0.254 |
| | 42011 | 12.432 | 4.405 | 0.143 | -2.975 | -2.774 | 0.081 | 0.081 | 0.172 |
| 23 Exterior Wall | 24211 | 4.177 | 2.901 | -0.313 | 0.092 | 0.628 | 0.014 | -0.122 | 1.431 |
| @ EL22.50 | 24224 | 0.340 | 4.642 | -3.562 | 0.871 | -0.344 | -0.446 | -0.824 | -0.417 |
| to 24.60m | 34210 | 15.323 | 4.794 | -0.317 | -2.778 | -2.409 | 0.015 | -0.011 | 0.104 |
| | 34220 | 1.721 | 4.437 | 2.297 | 0.980 | -1.464 | -0.240 | 1.609 | 0.013 |
| | 44201 | 1.001 | 5.209 | 0.300 | 0.668 | -1.698 | 0.337 | -1.911 | 0.044 |
| 24 Basemat | 90140 | 1.052 | 1.448 | 1.374 | 0.756 | -0.217 | -0.971 | -0.682 | -0.069 |
| @ Wall | 90182 | 1.619 | 0.481 | 0.610 | -0.246 | -3.861 | 0.184 | -0.141 | 2.769 |
| Below RCCV | 90111 | 0.567 | 2.209 | -0.001 | -4.129 | -0.522 | 0.050 | 2.860 | 0.127 |
| 25 Slab | 93140 | -0.669 | 2.312 | 4.286 | -0.515 | -0.395 | 0.287 | -0.135 | 0.111 |
| EL4.65m | 93182 | 4.229 | -4.036 | -1.098 | -0.354 | -1.829 | -0.083 | 0.075 | 1.370 |
| @ RCCV | 93111 | -3.602 | 4.956 | -0.257 | -1.768 | -0.316 | -0.047 | 1.178 | 0.000 |
| 26 Slab | 96144 | -0.269 | 4.712 | 6.965 | -0.230 | -0.125 | 0.167 | -0.073 | 0.023 |
| EL17.5m | 96186 | 6.688 | -4.125 | -1.418 | -0.091 | -0.316 | -0.048 | 0.016 | 0.347 |
| @ RCCV | 96113 | -8.342 | 2.574 | -1.682 | -4.481 | -2.783 | -0.199 | 1.240 | -0.059 |
| 27 Slab | 98472 | -0.778 | -0.772 | 5.392 | -0.313 | 0.031 | -0.311 | 0.451 | -0.561 |
| EL27.0m | 98514 | 0.436 | -2.393 | -1.392 | -0.533 | -0.070 | -0.005 | 0.036 | -0.726 |
| @ RCCV | 98424 | -9.063 | -6.855 | -1.452 | 1.316 | -0.418 | 0.194 | -5.559 | -0.101 |
| 28 Pool Girder | 123054 | 1.314 | -2.832 | 1.430 | 2.281 | 2.120 | 0.027 | -0.232 | 0.482 |
| @ Storage Pool | 123154 | 1.031 | 0.747 | -0.407 | 1.925 | 1.145 | -0.338 | -0.086 | 0.247 |
| 29 Pool Girder | 123062 | -1.254 | -0.148 | -0.719 | 0.101 | 0.323 | 0.027 | 0.057 | 0.172 |
| @ Well | 123162 | -1.691 | -0.032 | -0.470 | 0.128 | -0.117 | -0.003 | -0.151 | 0.085 |
| 30 Pool Girder | 123067 | -2.405 | -6.001 | -1.842 | 0.639 | 0.439 | -0.117 | -0.150 | 0.470 |
| @ Buffer Pool | 123167 | -2.204 | -2.669 | -2.246 | 0.268 | -0.449 | -0.228 | -0.011 | 0.180 |
| 31 MS Tunnel | 150122 | 0.224 | -0.515 | 1.901 | 1.053 | 3.140 | -0.007 | -0.584 | 0.364 |
| Wall and Slab | 96611 | -0.447 | 4.103 | -0.332 | -1.287 | -7.109 | -0.423 | 0.426 | 0.209 |
| | 98614 | -0.187 | 1.989 | -0.145 | -0.861 | -10.477 | -0.011 | 0.470 | 0.303 |

*S/P Slab: Suppression Pool Slab*
*SI to U.S. Customary units conversion (SI units are the controlling units and U.S. Customary units are for reference only):*
*1 MN/m = $6.852 \times 10^4$ lbf/ft*
*1 MNm/m = $2.248 \times 10^5$ lbf-ft/ft*

## Table 3G.1-18 Results of NASTRAN Analysis, Thermal Load (LOCA After 72 hours: Winter)

| Location | Element ID | Nx (MN/m) | Ny (MN/m) | Nxy (MN/m) | Mx (MNm/m) | My (MNm/m) | Mxy (MNm/m) | Qx (MN/m) | Qy (MN/m) |
|---|---|---|---|---|---|---|---|---|---|
| 1 RPV | 5006 | -12.849 | 0.250 | -0.523 | -16.011 | -12.625 | -0.093 | 0.227 | 4.158 |
| Pedestal | 5013 | -12.356 | 0.343 | -0.104 | -16.288 | -13.239 | -0.007 | 0.021 | 4.062 |
| Bottom | 5024 | -12.862 | 0.231 | 0.003 | -16.285 | -11.829 | -0.073 | -0.054 | 4.265 |
| 2 RPV | 6006 | -2.408 | 0.615 | 0.443 | -16.093 | -14.923 | 0.436 | 0.146 | -1.774 |
| Pedestal | 6013 | -2.624 | 0.212 | -0.206 | -16.582 | -14.795 | -0.048 | -0.033 | -2.015 |
| Mid-Height | 6024 | -2.728 | 0.667 | 0.076 | -18.533 | -11.361 | -0.661 | 0.020 | -1.697 |
| 3 RPV | 6606 | 8.837 | 0.682 | 0.577 | -16.163 | -12.297 | 0.057 | -1.395 | -2.012 |
| Pedestal | 6613 | 9.213 | 0.732 | -0.359 | -16.199 | -12.536 | 0.030 | 1.518 | -1.952 |
| Top | 6624 | 9.545 | 0.848 | 0.253 | -16.174 | -12.377 | 0.066 | -1.768 | -1.800 |
| 4 RCCV | 1806 | -1.533 | -1.021 | -0.228 | -10.248 | -14.646 | 0.090 | 0.096 | -1.555 |
| Wetwell | 1813 | -2.037 | -4.249 | -0.394 | -10.039 | -14.121 | -0.043 | -0.006 | -1.254 |
| Bottom | 1824 | -1.011 | -4.103 | 0.136 | -10.224 | -14.384 | 0.028 | -0.105 | -1.321 |
| 5 RCCV | 2606 | -4.269 | -1.249 | -0.234 | -9.962 | -7.559 | 0.001 | 0.044 | 0.117 |
| Wetwell | 2613 | -5.197 | -5.323 | -0.038 | -9.725 | -7.432 | -0.015 | -0.093 | 0.418 |
| Mid-Height | 2624 | -4.923 | -4.754 | -0.111 | -10.020 | -7.637 | -0.043 | 0.078 | 0.194 |
| 6 RCCV | 3406 | 5.196 | -0.343 | 0.501 | -10.839 | -14.129 | 0.028 | 0.144 | 2.477 |
| Wetwell | 3413 | 3.430 | -7.154 | 0.362 | -10.781 | -14.124 | -0.109 | 0.133 | 2.640 |
| Top | 3424 | 2.843 | -6.398 | 0.484 | -9.990 | -9.736 | 0.045 | -0.108 | 0.896 |
| 7 RCCV | 3606 | 0.851 | -0.258 | 0.079 | -12.665 | -14.960 | 0.282 | 0.179 | -0.838 |
| Drywell | 3613 | -0.941 | -8.499 | 1.390 | -12.337 | -13.241 | -0.243 | 0.024 | -0.345 |
| Bottom | 3624 | -10.577 | -8.035 | 0.298 | -7.210 | -6.858 | 0.089 | -0.061 | 1.477 |
| 8 RCCV | 4006 | 1.893 | 0.841 | -0.323 | -12.242 | -12.219 | 0.193 | -0.154 | -0.810 |
| Drywell | 4013 | 1.197 | -10.529 | 1.292 | -12.197 | -11.585 | 0.046 | -0.165 | -0.457 |
| Mid-Height | 4976 | -7.092 | -6.953 | 0.638 | -7.681 | -8.655 | 0.012 | 0.039 | -0.305 |
| 9 RCCV | 4406 | 6.726 | 0.270 | -1.390 | -11.635 | -9.864 | 0.510 | 0.460 | -0.602 |
| Drywell | 4413 | -0.989 | -11.897 | -0.372 | -12.126 | -10.994 | 0.411 | -0.180 | 0.175 |
| Top | 4424 | -10.172 | -5.565 | 0.973 | -7.107 | -5.872 | -0.070 | -0.009 | -1.761 |
| 10 Basemat | 80003 | -1.587 | -2.420 | -0.001 | -8.464 | -8.777 | -0.040 | 0.022 | -0.010 |
| @ Center | 80007 | -1.600 | -2.375 | 0.039 | -8.444 | -8.779 | -0.040 | 0.014 | -0.014 |
| | 80012 | -1.607 | -2.298 | 0.028 | -8.433 | -8.799 | -0.031 | 0.005 | 0.001 |
| 11 Basemat | 80206 | -1.604 | -2.924 | 0.120 | -8.962 | -9.256 | 0.034 | -0.007 | -0.049 |
| Inside | 80213 | -1.721 | -2.346 | 0.088 | -8.685 | -9.343 | -0.166 | -0.026 | -0.164 |
| RPV Pedestal | 80224 | -1.574 | -2.175 | 0.061 | -8.644 | -8.932 | -0.052 | -0.105 | 0.019 |
| 12 S/P Slab | 83306 | -11.672 | 3.835 | 0.218 | -9.639 | -8.194 | 0.035 | -0.073 | -0.040 |
| @ RPV | 83313 | -11.910 | 4.316 | -0.426 | -9.668 | -8.271 | -0.025 | -0.075 | 0.011 |
| | 83324 | -11.696 | 4.693 | 0.966 | -9.530 | -8.130 | -0.002 | 0.004 | 0.007 |
| 13 S/P Slab | 83406 | -8.140 | -0.574 | -0.507 | -9.101 | -8.502 | 0.000 | -0.107 | 0.016 |
| @ Center | 83413 | -8.751 | 0.109 | 0.485 | -9.199 | -8.591 | -0.012 | -0.069 | -0.008 |
| | 83424 | -8.209 | 0.422 | 0.013 | -9.166 | -8.499 | 0.001 | -0.043 | 0.006 |
| 14 S/P Slab | 83506 | -6.270 | -2.431 | -0.382 | -8.852 | -8.637 | -0.050 | -0.135 | 0.021 |
| @ RCCV | 83513 | -7.033 | -2.078 | 0.612 | -9.208 | -8.687 | -0.011 | -0.022 | 0.001 |
| | 83524 | -6.237 | -1.445 | -0.080 | -9.171 | -8.643 | 0.017 | -0.039 | -0.005 |
| 15 Topslab | 98120 | See Tables 3G.5-6 to 3G.5-9 | | | | | | | |
| @ Drywell Head | 98135 | | | | | | | | |
| Opening | 98104 | | | | | | | | |
| 16 Topslab | 98149 | | | | | | | | |
| @ Center | 98170 | | | | | | | | |
| | 98109 | | | | | | | | |
| 17 Topslab | 98174 | | | | | | | | |
| @ RCCV | 98197 | | | | | | | | |
| | 98103 | | | | | | | | |

## Table 3G.1-18 Results of NASTRAN Analysis, Thermal Load (LOCA After 72 hours: Winter) (Continued)

| Location | Element ID | Nx (MN/m) | Ny (MN/m) | Nxy (MN/m) | Mx (MNm/m) | My (MNm/m) | Mxy (MNm/m) | Qx (MN/m) | Qy (MN/m) |
|---|---|---|---|---|---|---|---|---|---|
| 18 Wall | 6 | 0.745 | -0.977 | -0.895 | 0.238 | 1.920 | -0.053 | 0.044 | 0.293 |
| Below RCCV | 13 | -0.174 | -4.065 | -0.782 | 0.604 | 3.357 | -0.002 | 0.023 | 0.785 |
| Bottom | 24 | 0.101 | -3.765 | 0.212 | 0.594 | 3.314 | -0.007 | -0.003 | 0.779 |
| 19 Wall | 806 | 1.907 | -2.149 | 0.225 | 0.307 | 1.688 | 0.090 | -0.068 | -0.082 |
| Below RCCV | 813 | 1.360 | -3.986 | -0.566 | 0.221 | 1.702 | -0.034 | 0.006 | 0.602 |
| Mid-Height | 824 | 1.151 | -3.732 | 0.198 | 0.224 | 1.729 | 0.027 | 0.015 | 0.502 |
| 20 Wall | 1606 | 15.858 | -3.114 | 0.381 | -0.839 | -4.009 | 0.124 | 0.101 | 3.042 |
| Below RCCV | 1613 | 15.713 | -4.649 | -0.420 | -1.005 | -5.538 | -0.011 | -0.016 | 3.612 |
| Top | 1624 | 16.688 | -4.842 | -0.107 | -1.115 | -5.549 | 0.001 | -0.106 | 3.698 |
| 21 Exterior Wall | 20011 | 3.314 | 4.817 | 0.922 | 0.447 | 1.837 | 0.052 | -0.225 | 0.576 |
| @ EL-11.50 | 20023 | -1.453 | -1.169 | 1.549 | 1.890 | 4.020 | 0.180 | 0.322 | 0.683 |
| to -10.50m | 30010 | 0.688 | 3.733 | -0.258 | 1.289 | 4.763 | -0.022 | -0.031 | -0.865 |
| | 30020 | -0.058 | -1.477 | -0.392 | 0.021 | 1.209 | 0.144 | -0.026 | -0.282 |
| | 40001 | -0.090 | -1.141 | 0.056 | 0.039 | 1.330 | -0.097 | 0.105 | -0.322 |
| | 40011 | 1.295 | 3.630 | 0.051 | 1.243 | 4.654 | 0.011 | 0.015 | -0.844 |
| 22 Exterior Wall | 22011 | 5.080 | 4.474 | -0.209 | -0.175 | -0.228 | 0.067 | 0.045 | 0.074 |
| @ EL4.65 | 22023 | 2.211 | -3.114 | -2.141 | 0.528 | 0.492 | -0.052 | 0.386 | 0.393 |
| to 6.60m | 32010 | 16.739 | 7.724 | -0.075 | -2.893 | -3.003 | -0.001 | -0.014 | 0.022 |
| | 32020 | 0.653 | 4.869 | 2.518 | 0.104 | -1.860 | -0.395 | 1.226 | 0.199 |
| | 42001 | 2.720 | 3.801 | 2.644 | 0.130 | -1.563 | -0.051 | -0.998 | -0.239 |
| | 42011 | 14.110 | 5.515 | 0.234 | -3.164 | -3.046 | 0.073 | 0.090 | 0.169 |
| 23 Exterior Wall | 24211 | 6.073 | 5.669 | -0.239 | 0.176 | 0.982 | 0.008 | -0.147 | 1.336 |
| @ EL22.50 | 24224 | 1.011 | 5.349 | -3.664 | 1.966 | 0.071 | -0.637 | -1.563 | -0.323 |
| to 24.60m | 34210 | 21.813 | 5.545 | -0.581 | -2.903 | -2.819 | 0.035 | -0.002 | -0.128 |
| | 34220 | 2.794 | 5.432 | 4.414 | 2.629 | -1.178 | -0.711 | 2.571 | 0.094 |
| | 44201 | 1.793 | 6.586 | 0.562 | 2.230 | -1.491 | 0.539 | -2.967 | 0.044 |
| 24 Basemat | 90140 | 0.838 | 1.691 | 1.751 | -0.171 | -1.046 | -1.095 | -1.135 | 0.139 |
| @ Wall | 90182 | 1.908 | 0.687 | 0.488 | -0.873 | -5.527 | 0.260 | -0.110 | 3.825 |
| Below RCCV | 90111 | 0.733 | 2.908 | -0.011 | -5.322 | -1.147 | 0.107 | 3.687 | 0.151 |
| 25 Slab | 93140 | -0.383 | 3.018 | 5.804 | -0.739 | -0.564 | 0.413 | -0.192 | 0.163 |
| EL4.65m | 93182 | 6.161 | -5.154 | -1.518 | -0.481 | -2.508 | -0.114 | 0.105 | 1.903 |
| @ RCCV | 93111 | -4.494 | 6.820 | -0.448 | -2.369 | -0.414 | -0.066 | 1.594 | 0.001 |
| 26 Slab | 96144 | 0.733 | 5.839 | 8.138 | -0.232 | -0.178 | 0.174 | -0.043 | 0.066 |
| EL17.5m | 96186 | 9.999 | -4.559 | -2.165 | -0.150 | -0.675 | -0.057 | 0.023 | 0.638 |
| @ RCCV | 96113 | -9.165 | 5.149 | -1.811 | -4.378 | -2.755 | -0.237 | 1.010 | -0.100 |
| 27 Slab | 98472 | See Tables 3G.5-6 to 3G.5-9 | | | | | | | |
| EL27.0m | 98514 | | | | | | | | |
| @ RCCV | 98424 | | | | | | | | |
| 28 Pool Girder | 123054 | | | | | | | | |
| @ Storage Pool | 123154 | | | | | | | | |
| 29 Pool Girder | 123062 | | | | | | | | |
| @ Well | 123162 | | | | | | | | |
| 30 Pool Girder | 123067 | | | | | | | | |
| @ Buffer Pool | 123167 | | | | | | | | |
| 31 MS Tunnel | 150122 | 0.316 | -0.711 | 1.797 | 0.940 | 3.101 | 0.011 | -0.551 | 0.426 |
| Wall and Slab | 96611 | -0.557 | 4.662 | -0.414 | -1.254 | -7.116 | -0.406 | 0.420 | 0.206 |
| | 98614 | -0.043 | 0.725 | -0.043 | -0.850 | -9.922 | -0.018 | 0.459 | 0.307 |

*S/P Slab: Suppression Pool Slab*
*SI to U.S. Customary units conversion (SI units are the controlling units and U.S. Customary units are for reference only):*
*1 MN/m = 6.852x10$^4$ lbf/ft*
*1 MNm/m = 2.248x10$^5$ lbf-ft/ft*

## Table 3G.1-19 Results of NASTRAN Analysis, Seismic Load (Horizontal: North to South Direction)

| Location | Element ID | Nx (MN/m) | Ny (MN/m) | Nxy (MN/m) | Mx (MNm/m) | My (MNm/m) | Mxy (MNm/m) | Qx (MN/m) | Qy (MN/m) |
|---|---|---|---|---|---|---|---|---|---|
| 1 RPV | 5006 | -3.078 | -4.175 | -1.042 | 0.833 | 5.067 | 0.048 | 0.055 | 2.169 |
| Pedestal | 5013 | -0.390 | 1.511 | -1.461 | 0.297 | 1.837 | -0.045 | 0.184 | 0.680 |
| Bottom | 5024 | 2.338 | 7.409 | -0.116 | -0.517 | -1.859 | 0.009 | 0.013 | -1.003 |
| 2 RPV | 6006 | 0.367 | -2.350 | -0.847 | -0.143 | -0.031 | 0.008 | 0.133 | -0.017 |
| Pedestal | 6013 | -0.395 | 1.443 | -1.458 | -0.321 | -0.158 | -0.039 | -0.055 | 0.014 |
| Mid-Height | 6024 | -0.465 | 3.711 | 0.279 | 0.247 | 0.151 | -0.039 | -0.032 | -0.200 |
| 3 RPV | 6606 | 0.017 | -1.487 | -0.164 | -0.294 | -2.729 | -0.257 | 0.607 | 0.877 |
| Pedestal | 6613 | -1.086 | 1.320 | -1.172 | -0.447 | -1.613 | 0.333 | -0.203 | 0.294 |
| Top | 6624 | 0.385 | 3.868 | -0.083 | 0.212 | -0.055 | 0.042 | -0.140 | -0.074 |
| 4 RCCV | 1806 | -1.606 | -1.571 | -4.006 | 0.296 | 2.004 | -0.079 | 0.033 | 0.748 |
| Wetwell | 1813 | -0.404 | 2.958 | -4.588 | 0.114 | 0.845 | -0.040 | 0.019 | 0.342 |
| Bottom | 1824 | 0.823 | 6.222 | -0.283 | -0.034 | -0.317 | -0.008 | 0.002 | -0.226 |
| 5 RCCV | 2606 | -0.346 | -1.042 | -4.081 | -0.061 | -0.101 | -0.121 | -0.015 | 0.195 |
| Wetwell | 2613 | -0.770 | 2.654 | -4.543 | -0.046 | -0.085 | -0.043 | -0.029 | 0.156 |
| Mid-Height | 2624 | -0.026 | 4.626 | -0.272 | 0.075 | 0.159 | -0.002 | -0.003 | -0.036 |
| 6 RCCV | 3406 | 0.033 | -0.509 | -3.758 | -0.091 | -0.210 | -0.079 | 0.007 | 0.126 |
| Wetwell | 3413 | -0.613 | 2.314 | -4.337 | -0.025 | -0.166 | -0.107 | 0.116 | 0.070 |
| Top | 3424 | -0.571 | 3.362 | -0.182 | 0.063 | 0.331 | 0.035 | -0.019 | -0.131 |
| 7 RCCV | 3606 | 0.137 | -0.283 | -3.728 | 0.109 | 0.809 | -0.008 | 0.028 | 0.356 |
| Drywell | 3613 | -0.644 | 2.004 | -3.951 | 0.094 | 0.502 | -0.021 | 0.109 | 0.201 |
| Bottom | 3624 | -0.605 | 3.556 | -0.196 | -0.051 | -0.246 | 0.052 | 0.003 | 0.000 |
| 8 RCCV | 4006 | 1.227 | -0.182 | -3.299 | 0.010 | -0.327 | -0.061 | -0.071 | 0.238 |
| Drywell | 4013 | -0.209 | 2.269 | -3.819 | 0.015 | -0.082 | -0.084 | 0.017 | 0.120 |
| Mid-Height | 4976 | -0.521 | 2.679 | -0.246 | -0.082 | -0.178 | -0.016 | 0.012 | -0.033 |
| 9 RCCV | 4406 | 1.216 | -0.075 | -2.465 | -0.163 | -0.891 | 0.060 | 0.075 | 0.192 |
| Drywell | 4413 | 0.646 | 2.551 | -3.248 | -0.107 | -0.447 | -0.002 | 0.014 | 0.079 |
| Top | 4424 | -0.993 | 1.982 | -0.206 | -0.076 | -0.383 | -0.022 | -0.006 | 0.001 |
| 10 Basemat | 80003 | 3.080 | 2.306 | -0.508 | -7.882 | -6.855 | 0.153 | 0.538 | 0.093 |
| @ Center | 80007 | 3.116 | 2.498 | -0.430 | -7.171 | -6.634 | 0.306 | 0.665 | 0.119 |
| | 80012 | 2.788 | 2.823 | -0.252 | -6.620 | -6.333 | 0.091 | 0.746 | 0.004 |
| 11 Basemat | 80206 | 3.713 | 1.292 | -1.433 | -9.991 | -7.678 | 0.701 | 0.553 | 0.030 |
| Inside | 80213 | 3.153 | 2.526 | -2.026 | -6.080 | -4.595 | 1.368 | 0.864 | 0.774 |
| RPV Pedestal | 80224 | 2.472 | 4.250 | -0.216 | -0.051 | -2.844 | 0.232 | 1.887 | 0.110 |
| 12 S/P Slab | 83306 | -0.349 | -0.831 | -1.485 | -2.817 | -1.586 | -0.299 | -1.008 | 0.148 |
| @ RPV | 83313 | -0.394 | -1.430 | 0.743 | -1.611 | -1.010 | -0.429 | -0.553 | 0.176 |
| | 83324 | -0.614 | -0.161 | 0.190 | -0.241 | -0.271 | -0.029 | -0.035 | 0.018 |
| 13 S/P Slab | 83406 | -0.287 | -1.184 | -1.348 | 0.406 | -0.877 | -0.229 | -0.706 | -0.011 |
| @ Center | 83413 | -0.302 | -1.151 | 0.698 | 0.211 | -0.628 | -0.292 | -0.403 | 0.009 |
| | 83424 | -0.872 | -0.188 | 0.099 | 0.030 | -0.303 | -0.018 | -0.056 | 0.001 |
| 14 S/P Slab | 83506 | -0.132 | -1.321 | -1.107 | 2.379 | 0.033 | -0.030 | -0.544 | -0.050 |
| @ RCCV | 83513 | -0.266 | -0.932 | 0.680 | 1.308 | -0.079 | -0.045 | -0.310 | -0.055 |
| | 83524 | -0.909 | -0.287 | 0.053 | 0.150 | -0.214 | 0.000 | -0.034 | -0.004 |
| 15 Topslab | 98120 | See Table 3G.5-10 | | | | | | | |
| @ Drywell Head | 98135 | | | | | | | | |
| Opening | 98104 | | | | | | | | |
| 16 Topslab | 98149 | | | | | | | | |
| @ Center | 98170 | | | | | | | | |
| | 98109 | | | | | | | | |
| 17 Topslab | 98174 | | | | | | | | |
| @ RCCV | 98197 | | | | | | | | |
| | 98103 | | | | | | | | |

## Table 3G.1-19 Results of NASTRAN Analysis, Seismic Load (Horizontal: North to South Direction) (Continued)

| Location | Element ID | Nx (MN/m) | Ny (MN/m) | Nxy (MN/m) | Mx (MNm/m) | My (MNm/m) | Mxy (MNm/m) | Qx (MN/m) | Qy (MN/m) |
|---|---|---|---|---|---|---|---|---|---|
| 18 Wall | 6 | -4.089 | -2.984 | -3.223 | 0.942 | 5.592 | 0.027 | 0.004 | 2.077 |
| Below RCCV | 13 | 0.044 | 2.815 | -3.741 | 0.609 | 3.227 | -0.055 | 0.100 | 1.002 |
| Bottom | 24 | 2.858 | 8.167 | -0.026 | 0.203 | 1.094 | -0.007 | 0.001 | 0.035 |
| 19 Wall | 806 | -2.161 | -2.456 | -3.484 | -0.087 | -0.286 | -0.009 | 0.025 | 0.212 |
| Below RCCV | 813 | -0.327 | 3.127 | -4.708 | -0.001 | -0.043 | -0.034 | -0.003 | 0.282 |
| Mid-Height | 824 | 1.116 | 7.455 | -0.159 | 0.028 | 0.188 | -0.002 | 0.001 | 0.136 |
| 20 Wall | 1606 | -1.430 | -1.890 | -3.843 | -0.279 | -1.325 | -0.071 | 0.012 | 0.200 |
| Below RCCV | 1613 | -0.183 | 2.987 | -4.716 | -0.232 | -1.214 | -0.026 | 0.007 | 0.350 |
| Top | 1624 | 0.886 | 6.169 | -0.227 | -0.043 | -0.346 | -0.008 | 0.002 | 0.183 |
| 21 Exterior Wall | 20011 | -0.416 | -0.625 | 1.004 | 1.925 | 7.945 | 0.042 | -0.075 | 2.959 |
| @ EL-11.50 | 20023 | 0.143 | -0.894 | -1.064 | -0.798 | 1.248 | 0.158 | 1.179 | 0.823 |
| to -10.50m | 30010 | 1.290 | 2.212 | -3.435 | 0.480 | 2.603 | -0.041 | -0.077 | -0.721 |
| | 30020 | 0.106 | 2.160 | -0.480 | 0.058 | 1.101 | 0.015 | -0.290 | -0.250 |
| | 40001 | 0.368 | 1.938 | -0.760 | -0.169 | 0.566 | -0.075 | 0.004 | -0.162 |
| | 40011 | 3.319 | 3.604 | -0.077 | 0.119 | 1.035 | 0.010 | 0.003 | -0.190 |
| 22 Exterior Wall | 22011 | -0.375 | -6.589 | 2.336 | 0.104 | 0.902 | 0.146 | -0.030 | 0.823 |
| @ EL4.65 | 22023 | 0.009 | -4.334 | -1.290 | -0.268 | 0.148 | -0.135 | 0.328 | 0.115 |
| to 6.60m | 32010 | -0.869 | 1.249 | -4.104 | -0.010 | -0.012 | -0.003 | -0.001 | -0.103 |
| | 32020 | -0.044 | 3.032 | -1.635 | 0.150 | 0.029 | 0.006 | 0.127 | -0.005 |
| | 42001 | 0.119 | 3.220 | -1.633 | 0.200 | -0.014 | -0.015 | -0.075 | -0.006 |
| | 42011 | 0.726 | 3.097 | 0.252 | 0.005 | -0.067 | 0.008 | 0.000 | 0.083 |
| 23 Exterior Wall | 24211 | -1.009 | -4.826 | 0.238 | -0.200 | -0.787 | -0.045 | 0.004 | 0.877 |
| @ EL22.50 | 24224 | -0.225 | -6.903 | 0.344 | 0.657 | 0.947 | -0.281 | 0.147 | 1.024 |
| to 24.60m | 34210 | -1.170 | 0.230 | -3.576 | -0.029 | -0.185 | -0.009 | 0.011 | -0.087 |
| | 34220 | -0.065 | 1.547 | -1.281 | -0.006 | 0.005 | 0.002 | 0.001 | -0.008 |
| | 44201 | -0.117 | 1.850 | -1.080 | 0.020 | 0.037 | -0.012 | 0.027 | -0.016 |
| 24 Basemat | 90140 | 0.231 | 1.224 | -1.952 | -6.981 | -0.849 | -0.232 | -2.965 | 1.218 |
| @ Wall | 90182 | 3.251 | 0.676 | -1.468 | -1.580 | -0.623 | 1.398 | -1.586 | 0.697 |
| Below RCCV | 90111 | 1.121 | 5.952 | -0.261 | 0.290 | -1.145 | 0.351 | -1.961 | -0.121 |
| 25 Slab | 93140 | -2.212 | 0.335 | -0.130 | -0.397 | -0.242 | 0.172 | -0.091 | 0.121 |
| EL4.65m | 93182 | -0.561 | -0.141 | -0.474 | -0.087 | -0.334 | -0.010 | 0.019 | 0.308 |
| @ RCCV | 93111 | -0.076 | -0.100 | 0.019 | 0.081 | 0.000 | 0.008 | -0.055 | 0.002 |
| 26 Slab | 96144 | -0.481 | 0.159 | 0.141 | -0.314 | -0.250 | 0.168 | -0.065 | 0.077 |
| EL17.5m | 96186 | -0.589 | -0.129 | -0.051 | -0.074 | -0.338 | -0.010 | 0.025 | 0.270 |
| @ RCCV | 96113 | 0.212 | -1.012 | -0.014 | 0.453 | -0.039 | -0.008 | -0.423 | -0.063 |
| 27 Slab | 98472 | See Table 3G.5-10 | | | | | | | |
| EL27.0m | 98514 | | | | | | | | |
| @ RCCV | 98424 | | | | | | | | |
| 28 Pool Girder | 123054 | | | | | | | | |
| @ Storage Pool | 123154 | | | | | | | | |
| 29 Pool Girder | 123062 | | | | | | | | |
| @ Well | 123162 | | | | | | | | |
| 30 Pool Girder | 123067 | | | | | | | | |
| @ Buffer Pool | 123167 | | | | | | | | |
| 31 MS Tunnel | 150122 | -0.009 | 0.169 | -0.046 | -0.038 | -0.142 | -0.009 | 0.008 | -0.031 |
| Wall and Slab | 96611 | 0.034 | -0.285 | 0.031 | -0.097 | -0.387 | -0.021 | 0.042 | 0.016 |
| | 98614 | 0.040 | -0.197 | 0.031 | 0.121 | 0.435 | 0.049 | -0.038 | -0.018 |

*S/P Slab: Suppression Pool Slab*
*SI to U.S. Customary units conversion (SI units are the controlling units and U.S. Customary units are for reference only):*
*1 MN/m = $6.852 \times 10^4$ lbf/ft*
*1 MNm/m = $2.248 \times 10^5$ lbf-ft/ft*

## Table 3G.1-20 Results of NASTRAN Analysis, Seismic Load (Horizontal: East to West Direction)

| Location | Element ID | Nx (MN/m) | Ny (MN/m) | Nxy (MN/m) | Mx (MNm/m) | My (MNm/m) | Mxy (MNm/m) | Qx (MN/m) | Qy (MN/m) |
|---|---|---|---|---|---|---|---|---|---|
| 1 RPV | 5006 | 3.616 | 7.896 | -1.994 | -0.849 | -4.468 | -0.071 | 0.270 | -1.899 |
| Pedestal | 5013 | 5.107 | 12.264 | 0.228 | -1.289 | -6.829 | -0.010 | 0.019 | -3.064 |
| Bottom | 5024 | 0.410 | 0.731 | 3.301 | -0.102 | -0.450 | 0.017 | -0.296 | -0.196 |
| 2 RPV | 6006 | -0.514 | 4.033 | -2.796 | 0.013 | 0.146 | -0.182 | -0.004 | -0.068 |
| Pedestal | 6013 | -0.991 | 6.124 | 0.364 | 0.229 | 0.113 | -0.037 | 0.000 | -0.218 |
| Mid-Height | 6024 | -0.167 | 1.387 | 5.018 | 0.016 | 0.037 | 0.335 | 0.177 | 0.034 |
| 3 RPV | 6606 | -0.946 | 2.274 | -2.273 | 0.228 | 1.652 | 0.167 | -0.116 | -0.731 |
| Pedestal | 6613 | -0.779 | 3.354 | 0.061 | 0.555 | 2.493 | -0.059 | -0.146 | -1.077 |
| Top | 6624 | -0.105 | 0.242 | 3.331 | 0.039 | 0.167 | -0.210 | 0.273 | -0.086 |
| 4 RCCV | 1806 | 0.709 | 5.463 | -4.576 | -0.207 | -1.028 | -0.018 | 0.001 | -0.388 |
| Wetwell | 1813 | 1.098 | 7.033 | 0.944 | -0.271 | -1.619 | -0.015 | 0.005 | -0.661 |
| Bottom | 1824 | 0.050 | 0.539 | 7.272 | -0.030 | -0.115 | 0.089 | -0.055 | -0.058 |
| 5 RCCV | 2606 | 0.058 | 3.845 | -4.121 | 0.016 | 0.080 | -0.050 | -0.007 | -0.106 |
| Wetwell | 2613 | 0.049 | 5.254 | 0.953 | 0.048 | 0.137 | -0.018 | -0.009 | -0.248 |
| Mid-Height | 2624 | 0.047 | 0.284 | 6.677 | 0.011 | 0.038 | 0.110 | 0.036 | -0.014 |
| 6 RCCV | 3406 | -0.396 | 2.515 | -3.894 | 0.039 | 0.160 | -0.197 | 0.173 | -0.103 |
| Wetwell | 3413 | -0.303 | 3.931 | 0.992 | 0.062 | 0.353 | 0.040 | -0.074 | -0.248 |
| Top | 3424 | -0.180 | 0.191 | 5.780 | 0.028 | 0.036 | 0.019 | 0.009 | -0.005 |
| 7 RCCV | 3606 | -0.453 | 2.336 | -3.560 | -0.048 | -0.352 | -0.054 | 0.168 | -0.142 |
| Drywell | 3613 | -0.305 | 4.102 | 1.145 | -0.137 | -0.791 | -0.005 | -0.062 | -0.291 |
| Bottom | 3624 | -0.121 | 0.243 | 5.543 | -0.030 | -0.089 | 0.021 | 0.024 | -0.042 |
| 8 RCCV | 4006 | -0.971 | 1.370 | -3.264 | 0.012 | 0.139 | -0.095 | 0.037 | -0.115 |
| Drywell | 4013 | -1.098 | 3.192 | 0.982 | 0.062 | 0.312 | 0.006 | -0.048 | -0.322 |
| Mid-Height | 4976 | 0.129 | 0.105 | 5.749 | 0.045 | 0.036 | 0.022 | 0.038 | -0.014 |
| 9 RCCV | 4406 | -1.388 | 0.546 | -2.745 | 0.129 | 0.527 | -0.010 | 0.005 | -0.229 |
| Drywell | 4413 | -0.912 | 2.428 | 0.851 | 0.028 | 0.966 | 0.161 | 0.051 | -0.023 |
| Top | 4424 | 0.265 | 0.045 | 6.072 | 0.047 | -0.005 | -0.004 | 0.040 | 0.030 |
| 10 Basemat | 80003 | 0.038 | 0.221 | 1.344 | 0.306 | 0.541 | -0.515 | 0.018 | 0.897 |
| @ Center | 80007 | 0.573 | -0.212 | 0.794 | 0.710 | 0.790 | -0.263 | -0.006 | 0.861 |
| | 80012 | -0.120 | 0.174 | 0.664 | 0.117 | 0.115 | 0.121 | -0.008 | 0.899 |
| 11 Basemat | 80206 | 1.779 | -0.232 | 2.676 | 3.698 | 4.684 | -2.110 | -0.625 | 1.546 |
| Inside | 80213 | 2.986 | -0.463 | 0.725 | 4.767 | 7.918 | -0.214 | 0.021 | 2.208 |
| RPV Pedestal | 80224 | 0.147 | 0.113 | -1.881 | 0.485 | 0.394 | 1.018 | 0.080 | 0.433 |
| 12 S/P Slab | 83306 | -0.494 | -0.425 | 0.891 | 1.324 | 0.614 | -0.365 | 0.519 | 0.181 |
| @ RPV | 83313 | -0.970 | -0.307 | 0.268 | 1.939 | 0.952 | 0.057 | 0.747 | -0.005 |
| | 83324 | -0.058 | -0.047 | -1.477 | 0.134 | 0.059 | 0.519 | 0.051 | -0.251 |
| 13 S/P Slab | 83406 | -0.361 | -0.135 | 0.348 | -0.242 | 0.242 | -0.259 | 0.338 | 0.009 |
| @ Center | 83413 | -1.016 | -0.152 | 0.194 | -0.305 | 0.399 | 0.036 | 0.490 | 0.001 |
| | 83424 | -0.070 | -0.035 | -0.753 | -0.021 | 0.021 | 0.360 | 0.034 | 0.005 |
| 14 S/P Slab | 83506 | -0.145 | -0.185 | 0.080 | -1.214 | -0.198 | -0.033 | 0.273 | -0.057 |
| @ RCCV | 83513 | -0.916 | -0.244 | 0.146 | -1.684 | -0.241 | 0.013 | 0.384 | 0.005 |
| | 83524 | -0.040 | -0.061 | -0.423 | -0.124 | -0.023 | 0.009 | 0.029 | 0.092 |
| 15 Topslab | 98120 | See Table 3G.5-11 | | | | | | | |
| @ Drywell Head | 98135 | | | | | | | | |
| Opening | 98104 | | | | | | | | |
| 16 Topslab | 98149 | | | | | | | | |
| @ Center | 98170 | | | | | | | | |
| | 98109 | | | | | | | | |
| 17 Topslab | 98174 | | | | | | | | |
| @ RCCV | 98197 | | | | | | | | |
| | 98103 | | | | | | | | |

## Table 3G.1-20 Results of NASTRAN Analysis, Seismic Load (Horizontal: East to West Direction) (Continued)

| Location | Element ID | Nx (MN/m) | Ny (MN/m) | Nxy (MN/m) | Mx (MNm/m) | My (MNm/m) | Mxy (MNm/m) | Qx (MN/m) | Qy (MN/m) |
|---|---|---|---|---|---|---|---|---|---|
| 18 Wall | 6 | 4.230 | 10.950 | -4.293 | -0.720 | -3.480 | -0.050 | 0.151 | -1.462 |
| Below RCCV | 13 | 4.826 | 10.395 | 0.412 | -0.323 | -2.046 | -0.014 | 0.031 | -1.063 |
| Bottom | 24 | 0.620 | 0.743 | 6.328 | 0.012 | -0.156 | 0.097 | -0.142 | -0.100 |
| 19 Wall | 806 | 0.719 | 8.364 | -5.143 | -0.026 | 0.175 | -0.138 | -0.023 | 0.008 |
| Below RCCV | 813 | 2.014 | 9.089 | 0.737 | 0.003 | 0.271 | -0.015 | -0.012 | -0.119 |
| Mid-Height | 824 | 0.182 | 0.748 | 7.528 | 0.025 | 0.045 | 0.096 | 0.050 | 0.019 |
| 20 Wall | 1606 | 0.573 | 5.830 | -5.315 | 0.081 | 0.664 | -0.012 | -0.017 | -0.149 |
| Below RCCV | 1613 | 0.954 | 7.084 | 0.921 | 0.184 | 1.109 | -0.007 | 0.009 | -0.240 |
| Top | 1624 | 0.049 | 0.602 | 7.469 | -0.009 | 0.017 | 0.051 | -0.040 | 0.018 |
| 21 Exterior Wall | 20011 | -0.722 | -1.086 | -9.644 | -0.079 | 0.489 | 0.033 | 0.100 | 0.107 |
| @ EL-11.50 | 20023 | -0.002 | 5.309 | -0.104 | 0.229 | 0.275 | -0.072 | -0.017 | 0.074 |
| to -10.50m | 30010 | 3.516 | 4.149 | 1.063 | -0.266 | -0.885 | -0.030 | -0.023 | 0.295 |
| | 30020 | 0.484 | 3.244 | 1.306 | -0.086 | 0.522 | 0.039 | 0.023 | -0.160 |
| | 40001 | -0.009 | 3.550 | 0.797 | 0.338 | 1.287 | 0.004 | 0.411 | -0.235 |
| | 40011 | -0.266 | -0.415 | 4.312 | 0.014 | -0.081 | 0.083 | 0.119 | -0.014 |
| 22 Exterior Wall | 22011 | 0.537 | 3.343 | -6.626 | 0.042 | -0.013 | -0.019 | 0.032 | 0.006 |
| @ EL4.65 | 22023 | 0.038 | 5.577 | -3.182 | 0.117 | -0.083 | 0.087 | -0.179 | -0.082 |
| to 6.60m | 32010 | 0.671 | 4.350 | 1.026 | -0.012 | -0.086 | -0.013 | 0.000 | 0.204 |
| | 32020 | 0.056 | 3.978 | 2.778 | 0.123 | -0.061 | 0.010 | 0.091 | 0.017 |
| | 42001 | -0.010 | 3.735 | 2.914 | 0.166 | 0.067 | -0.012 | -0.064 | -0.031 |
| | 42011 | 0.192 | -0.627 | 5.811 | 0.041 | 0.003 | 0.018 | 0.036 | -0.014 |
| 23 Exterior Wall | 24211 | 0.039 | 0.214 | -5.700 | -0.006 | 0.033 | 0.013 | 0.004 | 0.032 |
| @ EL22.50 | 24224 | 0.317 | 5.460 | -4.157 | -0.291 | -0.134 | -0.012 | 0.286 | -0.057 |
| to 24.60m | 34210 | -0.150 | 1.711 | 0.809 | 0.066 | 0.373 | -0.007 | -0.004 | 0.142 |
| | 34220 | -0.136 | 1.750 | 2.505 | 0.147 | 0.144 | 0.006 | 0.041 | -0.017 |
| | 44201 | 0.126 | 1.798 | 3.007 | 0.097 | 0.014 | 0.058 | -0.092 | 0.023 |
| 24 Basemat | 90140 | 0.196 | 4.879 | 3.018 | 0.158 | 3.225 | -2.906 | 3.389 | -5.494 |
| @ Wall | 90182 | 5.519 | 0.684 | 0.433 | 0.172 | -0.757 | -0.215 | -0.078 | -3.639 |
| Below RCCV | 90111 | -0.237 | 0.778 | -0.622 | -0.498 | 0.380 | 1.211 | -0.064 | -2.795 |
| 25 Slab | 93140 | 0.729 | -0.254 | -0.202 | 0.172 | 0.132 | -0.098 | 0.049 | -0.041 |
| EL4.65m | 93182 | -0.084 | -0.021 | -0.149 | 0.083 | 0.457 | 0.014 | -0.022 | -0.412 |
| @ RCCV | 93111 | 0.142 | 0.032 | -0.216 | 0.000 | -0.009 | -0.025 | 0.011 | 0.004 |
| 26 Slab | 96144 | -0.147 | -0.247 | -0.205 | 0.151 | 0.125 | -0.097 | 0.048 | -0.018 |
| EL17.5m | 96186 | -0.432 | 0.199 | -0.264 | 0.112 | 0.623 | 0.022 | -0.033 | -0.497 |
| @ RCCV | 96113 | 0.085 | -0.188 | 0.580 | 0.079 | 0.029 | 0.003 | -0.024 | 0.039 |
| 27 Slab | 98472 | See Table 3G.5-11 | | | | | | | |
| EL27.0m | 98514 | | | | | | | | |
| @ RCCV | 98424 | | | | | | | | |
| 28 Pool Girder | 123054 | | | | | | | | |
| @ Storage Pool | 123154 | | | | | | | | |
| 29 Pool Girder | 123062 | | | | | | | | |
| @ Well | 123162 | | | | | | | | |
| 30 Pool Girder | 123067 | | | | | | | | |
| @ Buffer Pool | 123167 | | | | | | | | |
| 31 MS Tunnel | 150122 | -0.002 | 0.117 | -0.022 | -0.031 | -0.115 | -0.044 | 0.008 | 0.254 |
| Wall and Slab | 96611 | 0.034 | -0.078 | -0.059 | -0.013 | -0.065 | 0.102 | -0.004 | -0.075 |
| | 98614 | 0.016 | 0.006 | -0.009 | 0.034 | 0.113 | 0.347 | -0.032 | -0.021 |

*S/P Slab: Suppression Pool*
*SI to U.S. Customary units conversion (SI units are the controlling units and U.S. Customary units are for reference only):*
*1 MN/m = $6.852 \times 10^4$ lbf/ft*
*1 MNm/m = $2.248 \times 10^5$ lbf-ft/ft*

## Table 3G.1-21 Results of NASTRAN Analysis, Seismic Load (Vertical: Upward Direction)

| Location | Element ID | Nx (MN/m) | Ny (MN/m) | Nxy (MN/m) | Mx (MNm/m) | My (MNm/m) | Mxy (MNm/m) | Qx (MN/m) | Qy (MN/m) |
|---|---|---|---|---|---|---|---|---|---|
| 1 RPV | 5006 | -1.347 | 2.104 | -0.142 | 0.416 | 2.400 | -0.007 | 0.016 | 1.002 |
| Pedestal | 5013 | -1.094 | 2.642 | -0.206 | 0.362 | 2.151 | 0.000 | 0.011 | 0.872 |
| Bottom | 5024 | -0.811 | 2.855 | -0.014 | 0.334 | 1.969 | -0.008 | -0.003 | 0.793 |
| 2 RPV | 6006 | 0.148 | 2.129 | -0.204 | -0.016 | -0.066 | -0.022 | -0.020 | 0.015 |
| Pedestal | 6013 | 0.166 | 2.268 | -0.308 | 0.018 | -0.024 | -0.009 | 0.013 | -0.025 |
| Mid-Height | 6024 | 0.050 | 1.700 | 0.177 | -0.004 | 0.032 | -0.006 | -0.014 | -0.053 |
| 3 RPV | 6606 | 0.340 | 1.739 | -0.317 | -0.389 | -2.606 | -0.100 | -0.083 | 0.872 |
| Pedestal | 6613 | 0.364 | 1.782 | -0.164 | -0.345 | -2.532 | 0.118 | 0.054 | 0.845 |
| Top | 6624 | 0.262 | 1.715 | -0.051 | -0.365 | -2.534 | -0.122 | -0.050 | 0.832 |
| 4 RCCV | 1806 | 0.410 | 4.305 | -0.142 | 0.086 | 0.580 | -0.010 | 0.000 | 0.125 |
| Wetwell | 1813 | 0.526 | 4.234 | -0.133 | 0.092 | 0.506 | -0.004 | 0.000 | 0.094 |
| Bottom | 1824 | 0.435 | 4.688 | 0.050 | 0.092 | 0.549 | -0.002 | 0.003 | 0.112 |
| 5 RCCV | 2606 | 0.219 | 3.889 | -0.195 | -0.003 | 0.025 | -0.007 | 0.000 | 0.093 |
| Wetwell | 2613 | 0.258 | 3.953 | -0.136 | 0.023 | 0.051 | -0.002 | 0.001 | 0.069 |
| Mid-Height | 2624 | 0.284 | 4.307 | 0.009 | -0.001 | 0.004 | -0.002 | 0.001 | 0.101 |
| 6 RCCV | 3406 | 0.299 | 3.274 | -0.279 | -0.098 | -0.605 | 0.063 | -0.097 | 0.217 |
| Wetwell | 3413 | 0.083 | 3.770 | -0.143 | -0.036 | -0.291 | -0.033 | 0.040 | 0.113 |
| Top | 3424 | 0.164 | 3.715 | -0.005 | -0.045 | -0.311 | 0.068 | -0.075 | 0.088 |
| 7 RCCV | 3606 | 0.144 | 3.079 | -0.154 | 0.015 | -0.026 | 0.058 | -0.076 | -0.104 |
| Drywell | 3613 | -0.084 | 3.713 | -0.179 | 0.015 | 0.043 | -0.050 | 0.023 | -0.136 |
| Bottom | 3624 | 0.100 | 3.864 | -0.050 | 0.000 | -0.053 | 0.070 | -0.040 | -0.075 |
| 8 RCCV | 4006 | -0.474 | 2.622 | -0.080 | 0.172 | 0.557 | 0.047 | -0.008 | -0.246 |
| Drywell | 4013 | -0.519 | 3.950 | -0.244 | 0.053 | 0.441 | 0.001 | 0.007 | -0.087 |
| Mid-Height | 4976 | -0.012 | 3.210 | -0.184 | 0.018 | 0.199 | 0.005 | 0.007 | -0.053 |
| 9 RCCV | 4406 | -0.485 | 2.127 | 0.201 | 0.310 | 1.743 | 0.030 | 0.014 | -0.374 |
| Drywell | 4413 | 0.510 | 4.141 | -0.095 | 0.163 | 0.892 | -0.006 | 0.007 | -0.163 |
| Top | 4424 | 0.012 | 2.549 | -0.147 | 0.028 | 0.331 | -0.004 | -0.001 | -0.038 |
| 10 Basemat | 80003 | 1.114 | 1.334 | -0.056 | -7.809 | -8.015 | 0.028 | -0.247 | 0.194 |
| @ Center | 80007 | 1.136 | 1.354 | -0.047 | -7.820 | -8.014 | 0.028 | 0.036 | 0.314 |
| | 80012 | 1.133 | 1.390 | -0.047 | -7.817 | -8.010 | 0.026 | 0.304 | 0.044 |
| 11 Basemat | 80206 | 1.061 | 1.209 | -0.090 | -5.062 | -5.503 | -0.898 | -1.047 | 0.927 |
| Inside | 80213 | 1.138 | 1.395 | -0.134 | -5.976 | -4.336 | 0.101 | 0.047 | 1.429 |
| RPV Pedestal | 80224 | 1.234 | 1.559 | -0.051 | -4.341 | -6.050 | 0.156 | 1.376 | 0.112 |
| 12 S/P Slab | 83306 | -0.130 | -0.374 | 0.192 | -1.919 | -1.347 | 0.009 | -1.086 | 0.025 |
| @ RPV | 83313 | -0.284 | -0.266 | 0.051 | -1.931 | -1.343 | -0.009 | -1.091 | -0.024 |
| | 83324 | -0.256 | -0.392 | 0.019 | -1.928 | -1.342 | 0.015 | -1.090 | 0.023 |
| 13 S/P Slab | 83406 | -0.187 | -0.349 | 0.142 | 0.901 | -0.611 | 0.002 | -0.487 | 0.000 |
| @ Center | 83413 | -0.380 | -0.198 | 0.016 | 0.891 | -0.591 | 0.001 | -0.490 | -0.002 |
| | 83424 | -0.327 | -0.344 | 0.005 | 0.898 | -0.591 | 0.002 | -0.492 | 0.001 |
| 14 S/P Slab | 83506 | -0.183 | -0.304 | 0.139 | 1.510 | -0.006 | 0.009 | -0.062 | -0.004 |
| @ RCCV | 83513 | -0.396 | -0.180 | -0.010 | 1.527 | 0.016 | 0.003 | -0.071 | -0.003 |
| | 83524 | -0.326 | -0.340 | 0.001 | 1.539 | 0.015 | 0.001 | -0.071 | 0.001 |
| 15 Topslab | 98120 | See Table 3G.5-12 | | | | | | | |
| @ Drywell Head | 98135 | | | | | | | | |
| Opening | 98104 | | | | | | | | |
| 16 Topslab | 98149 | | | | | | | | |
| @ Center | 98170 | | | | | | | | |
| | 98109 | | | | | | | | |
| 17 Topslab | 98174 | | | | | | | | |
| @ RCCV | 98197 | | | | | | | | |
| | 98103 | | | | | | | | |

## Table 3G.1-21 Results of NASTRAN Analysis, Seismic Load (Vertical: Upward Direction) (Continued)

| Location | Element ID | Nx (MN/m) | Ny (MN/m) | Nxy (MN/m) | Mx (MNm/m) | My (MNm/m) | Mxy (MNm/m) | Qx (MN/m) | Qy (MN/m) |
|---|---|---|---|---|---|---|---|---|---|
| 18 Wall | 6 | -0.370 | 6.048 | -0.436 | 0.328 | 2.168 | -0.011 | 0.033 | 0.699 |
| Below RCCV | 13 | -0.499 | 4.721 | -0.323 | 0.570 | 3.092 | -0.003 | 0.004 | 0.953 |
| Bottom | 24 | -0.466 | 5.196 | 0.151 | 0.596 | 3.239 | -0.005 | 0.001 | 0.977 |
| 19 Wall | 806 | -0.054 | 5.223 | -0.088 | -0.016 | 0.030 | 0.023 | -0.007 | 0.122 |
| Below RCCV | 813 | 0.109 | 4.681 | -0.265 | 0.023 | 0.035 | 0.009 | 0.017 | 0.212 |
| Mid-Height | 824 | 0.060 | 5.158 | 0.138 | 0.028 | -0.004 | 0.006 | -0.001 | 0.221 |
| 20 Wall | 1606 | 0.591 | 4.611 | -0.064 | -0.168 | -0.903 | -0.008 | 0.004 | 0.312 |
| Below RCCV | 1613 | 0.718 | 4.491 | -0.181 | -0.164 | -0.992 | -0.005 | 0.000 | 0.358 |
| Top | 1624 | 0.624 | 4.938 | 0.094 | -0.163 | -0.965 | 0.000 | 0.005 | 0.342 |
| 21 Exterior Wall | 20011 | 0.614 | 3.372 | 0.346 | 0.042 | 0.022 | -0.005 | -0.052 | -0.022 |
| @ EL-11.50 | 20023 | 0.002 | 1.062 | 0.427 | -0.109 | 0.222 | 0.007 | 0.092 | 0.140 |
| to -10.50m | 30010 | 0.208 | 1.755 | -0.053 | 0.358 | 1.916 | -0.014 | -0.002 | -0.455 |
| | 30020 | 0.047 | 0.817 | 0.159 | -0.175 | 0.514 | 0.054 | -0.114 | -0.174 |
| | 40001 | 0.049 | 0.842 | -0.149 | -0.182 | 0.521 | -0.053 | 0.112 | -0.170 |
| | 40011 | 0.329 | 2.102 | 0.008 | 0.395 | 2.093 | 0.010 | 0.001 | -0.501 |
| 22 Exterior Wall | 22011 | -0.175 | 2.678 | -0.601 | 0.011 | -0.020 | 0.002 | 0.022 | -0.020 |
| @ EL4.65 | 22023 | -0.004 | 1.366 | 0.333 | 0.114 | 0.002 | 0.013 | -0.072 | -0.012 |
| to 6.60m | 32010 | 0.012 | 1.481 | -0.045 | -0.001 | -0.033 | -0.002 | 0.000 | 0.007 |
| | 32020 | 0.040 | 1.571 | 0.054 | 0.052 | 0.002 | 0.007 | 0.047 | 0.007 |
| | 42001 | 0.049 | 1.634 | 0.032 | 0.067 | 0.004 | -0.002 | -0.035 | 0.002 |
| | 42011 | 0.252 | 1.842 | 0.087 | 0.001 | -0.025 | 0.003 | -0.002 | 0.004 |
| 23 Exterior Wall | 24211 | 0.132 | 1.386 | -0.115 | 0.083 | 0.578 | -0.013 | 0.003 | 0.151 |
| @ EL22.50 | 24224 | 0.048 | 1.081 | -0.330 | -0.020 | 0.047 | 0.060 | 0.054 | 0.030 |
| to 24.60m | 34210 | 0.006 | 0.653 | -0.051 | -0.006 | 0.002 | -0.001 | -0.004 | -0.014 |
| | 34220 | -0.039 | 0.810 | 0.142 | -0.038 | 0.021 | 0.005 | -0.031 | 0.000 |
| | 44201 | -0.023 | 0.957 | 0.280 | -0.031 | 0.012 | -0.013 | 0.037 | 0.001 |
| 24 Basemat | 90140 | -0.089 | 0.746 | 0.430 | 1.667 | 1.224 | -2.812 | 1.354 | -1.582 |
| @ Wall | 90182 | 0.639 | 0.338 | 0.030 | -0.860 | 1.733 | 0.351 | -0.170 | -0.447 |
| Below RCCV | 90111 | 0.386 | 0.881 | -0.046 | 1.649 | -0.999 | 0.431 | -0.497 | -0.097 |
| 25 Slab | 93140 | 0.061 | -0.102 | -0.056 | -0.091 | -0.107 | 0.070 | -0.132 | 0.109 |
| EL4.65m | 93182 | -0.101 | -0.089 | -0.021 | -0.034 | -0.119 | -0.007 | 0.009 | 0.175 |
| @ RCCV | 93111 | -0.058 | -0.120 | 0.023 | -0.137 | -0.034 | -0.005 | 0.160 | 0.003 |
| 26 Slab | 96144 | 0.239 | -0.171 | -0.124 | -0.056 | -0.058 | 0.040 | -0.097 | 0.074 |
| EL17.5m | 96186 | -0.239 | 0.094 | 0.038 | -0.003 | -0.003 | -0.005 | 0.006 | 0.053 |
| @ RCCV | 96113 | 0.067 | -0.427 | 0.079 | 0.130 | -0.033 | -0.016 | -0.156 | -0.020 |
| 27 Slab | 98472 | See Table 3G.5-12 | | | | | | | |
| EL27.0m | 98514 | | | | | | | | |
| @ RCCV | 98424 | | | | | | | | |
| 28 Pool Girder | 123054 | | | | | | | | |
| @ Storage Pool | 123154 | | | | | | | | |
| 29 Pool Girder | 123062 | | | | | | | | |
| @ Well | 123162 | | | | | | | | |
| 30 Pool Girder | 123067 | | | | | | | | |
| @ Buffer Pool | 123167 | | | | | | | | |
| 31 MS Tunnel | 150122 | 0.026 | -0.081 | -0.251 | -0.017 | -0.021 | -0.016 | 0.010 | 0.049 |
| Wall and Slab | 96611 | 0.014 | -0.305 | 0.015 | -0.044 | 0.160 | 0.065 | 0.071 | -0.022 |
| | 98614 | 0.016 | 0.219 | 0.015 | 0.004 | 0.465 | 0.055 | 0.039 | -0.029 |

*S/P Slab: Suppression Pool Slab*
*SI to U.S. Customary units conversion (SI units are the controlling units and U.S. Customary units are for reference only):*
*1 MN/m = $6.852 \times 10^4$ lbf/ft*
*1 MNm/m = $2.248 \times 10^5$ lbf-ft/ft*

## Table 3G.1-22 Combined Forces and Moments: RCCV, Selected Load Combination CV-1

| Location | Element ID | | Nx (MN/m) | Ny (MN/m) | Nxy (MN/m) | Mx (MNm/m) | My (MNm/m) | Mxy (MNm/m) | Qx (MN/m) | Qy (MN/m) |
|---|---|---|---|---|---|---|---|---|---|---|
| 1 RPV | 5006 | OTHR | -2.178 | -7.665 | -0.044 | 0.372 | 2.178 | 0.033 | -0.011 | 1.259 |
| Pedestal | | TEMP | 0.000 | 0.000 | 0.000 | 0.000 | 0.000 | 0.000 | 0.000 | 0.000 |
| Bottom | 5013 | OTHR | -2.701 | -8.068 | 0.048 | 0.310 | 2.375 | -0.003 | -0.005 | 1.445 |
| | | TEMP | 0.000 | 0.000 | 0.000 | 0.000 | 0.000 | 0.000 | 0.000 | 0.000 |
| | 5024 | OTHR | -2.540 | -7.479 | 0.051 | 0.482 | 2.124 | -0.010 | 0.011 | 1.239 |
| | | TEMP | 0.000 | 0.000 | 0.000 | 0.000 | 0.000 | 0.000 | 0.000 | 0.000 |
| 2 RPV | 6006 | OTHR | 1.178 | -7.403 | 0.008 | -0.051 | -0.210 | 0.024 | 0.075 | -0.347 |
| Pedestal | | TEMP | 0.000 | 0.000 | 0.000 | 0.000 | 0.000 | 0.000 | 0.000 | 0.000 |
| Mid-Height | 6013 | OTHR | 0.889 | -7.370 | 0.187 | -0.205 | -0.269 | 0.004 | -0.002 | -0.329 |
| | | TEMP | 0.000 | 0.000 | 0.000 | 0.000 | 0.000 | 0.000 | 0.000 | 0.000 |
| | 6024 | OTHR | 1.233 | -5.429 | -0.514 | 0.296 | 0.070 | 0.015 | -0.008 | -0.265 |
| | | TEMP | 0.000 | 0.000 | 0.000 | 0.000 | 0.000 | 0.000 | 0.000 | 0.000 |
| 3 RPV | 6606 | OTHR | 0.579 | -6.185 | 0.792 | 0.431 | 2.799 | 0.035 | 0.233 | -0.992 |
| Pedestal | | TEMP | 0.000 | 0.000 | 0.000 | 0.000 | 0.000 | 0.000 | 0.000 | 0.000 |
| Top | 6613 | OTHR | 0.263 | -6.370 | -0.098 | 0.292 | 2.826 | -0.105 | -0.092 | -1.046 |
| | | TEMP | 0.000 | 0.000 | 0.000 | 0.000 | 0.000 | 0.000 | 0.000 | 0.000 |
| | 6624 | OTHR | 0.815 | -6.023 | 0.318 | 0.408 | 2.487 | 0.144 | 0.061 | -0.804 |
| | | TEMP | 0.000 | 0.000 | 0.000 | 0.000 | 0.000 | 0.000 | 0.000 | 0.000 |
| 4 RCCV | 1806 | OTHR | 0.296 | -1.968 | -0.046 | 0.371 | 2.208 | 0.018 | 0.010 | 0.784 |
| Wetwell | | TEMP | 0.000 | 0.000 | 0.000 | 0.000 | 0.000 | 0.000 | 0.000 | 0.000 |
| Bottom | 1813 | OTHR | 0.100 | -2.368 | 0.194 | 0.364 | 2.330 | -0.001 | -0.003 | 0.894 |
| | | TEMP | 0.000 | 0.000 | 0.000 | 0.000 | 0.000 | 0.000 | 0.000 | 0.000 |
| | 1824 | OTHR | 0.536 | -2.275 | 0.002 | 0.363 | 2.110 | 0.008 | -0.005 | 0.824 |
| | | TEMP | 0.000 | 0.000 | 0.000 | 0.000 | 0.000 | 0.000 | 0.000 | 0.000 |
| 5 RCCV | 2606 | OTHR | 2.621 | -1.496 | -0.094 | -0.167 | -0.662 | -0.001 | 0.008 | -0.046 |
| Wetwell | | TEMP | 0.000 | 0.000 | 0.000 | 0.000 | 0.000 | 0.000 | 0.000 | 0.000 |
| Mid-Height | 2613 | OTHR | 2.292 | -2.140 | 0.183 | -0.192 | -0.683 | 0.000 | -0.007 | 0.013 |
| | | TEMP | 0.000 | 0.000 | 0.000 | 0.000 | 0.000 | 0.000 | 0.000 | 0.000 |
| | 2624 | OTHR | 2.618 | -1.810 | -0.015 | -0.120 | -0.694 | -0.003 | 0.004 | -0.082 |
| | | TEMP | 0.000 | 0.000 | 0.000 | 0.000 | 0.000 | 0.000 | 0.000 | 0.000 |
| 6 RCCV | 3406 | OTHR | 2.445 | -0.817 | 0.115 | -0.070 | -0.222 | 0.069 | -0.031 | -0.014 |
| Wetwell | | TEMP | 0.000 | 0.000 | 0.000 | 0.000 | 0.000 | 0.000 | 0.000 | 0.000 |
| Top | 3413 | OTHR | 2.124 | -1.984 | 0.134 | -0.107 | -0.259 | -0.095 | 0.048 | 0.018 |
| | | TEMP | 0.000 | 0.000 | 0.000 | 0.000 | 0.000 | 0.000 | 0.000 | 0.000 |
| | 3424 | OTHR | 2.104 | -1.155 | 0.048 | 0.023 | 0.079 | 0.059 | -0.019 | -0.055 |
| | | TEMP | 0.000 | 0.000 | 0.000 | 0.000 | 0.000 | 0.000 | 0.000 | 0.000 |
| 7 RCCV | 3606 | OTHR | 2.398 | -0.271 | 0.025 | -0.020 | 0.093 | 0.100 | 0.003 | 0.496 |
| Drywell | | TEMP | 0.000 | 0.000 | 0.000 | 0.000 | 0.000 | 0.000 | 0.000 | 0.000 |
| Bottom | 3613 | OTHR | 2.137 | -1.514 | 0.222 | -0.001 | 0.364 | -0.080 | 0.001 | 0.698 |
| | | TEMP | 0.000 | 0.000 | 0.000 | 0.000 | 0.000 | 0.000 | 0.000 | 0.000 |
| | 3624 | OTHR | 2.088 | -0.764 | 0.040 | 0.112 | 0.557 | 0.059 | 0.011 | 0.562 |
| | | TEMP | 0.000 | 0.000 | 0.000 | 0.000 | 0.000 | 0.000 | 0.000 | 0.000 |
| 8 RCCV | 4006 | OTHR | 1.605 | 0.170 | 0.099 | -0.086 | -0.270 | 0.024 | 0.033 | -0.282 |
| Drywell | | TEMP | 0.000 | 0.000 | 0.000 | 0.000 | 0.000 | 0.000 | 0.000 | 0.000 |
| Mid-Height | 4013 | OTHR | 1.636 | -1.780 | 0.362 | -0.132 | -0.409 | 0.009 | -0.010 | -0.271 |
| | | TEMP | 0.000 | 0.000 | 0.000 | 0.000 | 0.000 | 0.000 | 0.000 | 0.000 |
| | 4976 | OTHR | 1.628 | -0.342 | -0.007 | 0.038 | -0.013 | 0.001 | -0.013 | -0.376 |
| | | TEMP | 0.000 | 0.000 | 0.000 | 0.000 | 0.000 | 0.000 | 0.000 | 0.000 |
| 9 RCCV | 4406 | OTHR | 0.581 | 0.551 | 0.150 | 0.331 | 1.985 | 0.002 | 0.009 | -0.641 |
| Drywell | | TEMP | 0.000 | 0.000 | 0.000 | 0.000 | 0.000 | 0.000 | 0.000 | 0.000 |
| Top | 4413 | OTHR | -0.114 | -2.059 | 0.252 | 0.270 | 2.156 | 0.046 | 0.005 | -0.797 |
| | | TEMP | 0.000 | 0.000 | 0.000 | 0.000 | 0.000 | 0.000 | 0.000 | 0.000 |
| | 4424 | OTHR | 1.200 | -0.082 | -0.023 | 0.428 | 2.315 | 0.024 | 0.003 | -0.715 |
| | | TEMP | 0.000 | 0.000 | 0.000 | 0.000 | 0.000 | 0.000 | 0.000 | 0.000 |

## Table 3G.1-22 Combined Forces and Moments: RCCV, Selected Load Combination CV-1 (Continued)

| Location | Element ID | | Nx (MN/m) | Ny (MN/m) | Nxy (MN/m) | Mx (MNm/m) | My (MNm/m) | Mxy (MNm/m) | Qx (MN/m) | Qy (MN/m) |
|---|---|---|---|---|---|---|---|---|---|---|
| 10 Basemat @ Center | 80003 | OTHR | -2.857 | -1.587 | 0.149 | -0.645 | -0.062 | -0.045 | 0.163 | -0.110 |
| | | TEMP | 0.000 | 0.000 | 0.000 | 0.000 | 0.000 | 0.000 | 0.000 | 0.000 |
| | 80007 | OTHR | -2.883 | -1.594 | 0.134 | -0.569 | -0.040 | -0.027 | 0.005 | -0.179 |
| | | TEMP | 0.000 | 0.000 | 0.000 | 0.000 | 0.000 | 0.000 | 0.000 | 0.000 |
| | 80012 | OTHR | -2.936 | -1.583 | 0.135 | -0.563 | -0.037 | -0.031 | -0.151 | -0.018 |
| | | TEMP | 0.000 | 0.000 | 0.000 | 0.000 | 0.000 | 0.000 | 0.000 | 0.000 |
| 11 Basemat Inside RPV Pedestal | 80206 | OTHR | -2.524 | -1.740 | 0.230 | -2.539 | -2.324 | 0.705 | 0.962 | -1.142 |
| | | TEMP | 0.000 | 0.000 | 0.000 | 0.000 | 0.000 | 0.000 | 0.000 | 0.000 |
| | 80213 | OTHR | -2.625 | -1.588 | 0.088 | -1.654 | -3.090 | -0.111 | -0.079 | -1.523 |
| | | TEMP | 0.000 | 0.000 | 0.000 | 0.000 | 0.000 | 0.000 | 0.000 | 0.000 |
| | 80224 | OTHR | -3.109 | -2.000 | 0.060 | -2.744 | -1.738 | -0.161 | -1.212 | -0.143 |
| | | TEMP | 0.000 | 0.000 | 0.000 | 0.000 | 0.000 | 0.000 | 0.000 | 0.000 |
| 12 S/P Slab @ RPV | 83306 | OTHR | 0.001 | 1.181 | -0.423 | -0.271 | 0.608 | -0.065 | 1.933 | -0.038 |
| | | TEMP | 0.000 | 0.000 | 0.000 | 0.000 | 0.000 | 0.000 | 0.000 | 0.000 |
| | 83313 | OTHR | 0.198 | 0.926 | -0.090 | -0.212 | 0.623 | 0.041 | 1.946 | 0.051 |
| | | TEMP | 0.000 | 0.000 | 0.000 | 0.000 | 0.000 | 0.000 | 0.000 | 0.000 |
| | 83324 | OTHR | 0.228 | 1.415 | 0.052 | -0.305 | 0.574 | -0.038 | 1.894 | -0.055 |
| | | TEMP | 0.000 | 0.000 | 0.000 | 0.000 | 0.000 | 0.000 | 0.000 | 0.000 |
| 13 S/P Slab @ Center | 83406 | OTHR | 0.250 | 0.881 | -0.316 | -2.852 | -0.673 | -0.030 | -0.134 | 0.003 |
| | | TEMP | 0.000 | 0.000 | 0.000 | 0.000 | 0.000 | 0.000 | 0.000 | 0.000 |
| | 83413 | OTHR | 0.577 | 0.669 | -0.018 | -2.824 | -0.680 | -0.005 | -0.124 | 0.002 |
| | | TEMP | 0.000 | 0.000 | 0.000 | 0.000 | 0.000 | 0.000 | 0.000 | 0.000 |
| | 83424 | OTHR | 0.416 | 1.102 | 0.029 | -2.793 | -0.671 | 0.005 | -0.155 | 0.000 |
| | | TEMP | 0.000 | 0.000 | 0.000 | 0.000 | 0.000 | 0.000 | 0.000 | 0.000 |
| 14 S/P Slab @ RCCV | 83506 | OTHR | 0.380 | 0.726 | -0.243 | 1.282 | -0.177 | -0.026 | -1.744 | 0.000 |
| | | TEMP | 0.000 | 0.000 | 0.000 | 0.000 | 0.000 | 0.000 | 0.000 | 0.000 |
| | 83513 | OTHR | 0.745 | 0.609 | 0.004 | 1.265 | -0.185 | -0.005 | -1.734 | 0.002 |
| | | TEMP | 0.000 | 0.000 | 0.000 | 0.000 | 0.000 | 0.000 | 0.000 | 0.000 |
| | 83524 | OTHR | 0.482 | 0.996 | 0.030 | 1.389 | -0.133 | -0.001 | -1.762 | 0.001 |
| | | TEMP | 0.000 | 0.000 | 0.000 | 0.000 | 0.000 | 0.000 | 0.000 | 0.000 |
| 15 Topslab @ Drywell Head Opening | 98120 | OTHR | 0.087 | 0.959 | 1.143 | 0.928 | 0.715 | 0.389 | 0.409 | -0.810 |
| | | TEMP | 0.000 | 0.000 | 0.000 | 0.000 | 0.000 | 0.000 | 0.000 | 0.000 |
| | 98135 | OTHR | -0.770 | -0.415 | -0.496 | 0.769 | -0.198 | 0.170 | 0.167 | -1.201 |
| | | TEMP | 0.000 | 0.000 | 0.000 | 0.000 | 0.000 | 0.000 | 0.000 | 0.000 |
| | 98104 | OTHR | -0.243 | 2.469 | -0.772 | 0.812 | 2.645 | -0.300 | -0.482 | -0.706 |
| | | TEMP | 0.000 | 0.000 | 0.000 | 0.000 | 0.000 | 0.000 | 0.000 | 0.000 |
| 16 Topslab @ Center | 98149 | OTHR | -0.098 | 1.443 | -0.477 | 0.347 | 0.110 | 0.268 | 0.076 | 0.368 |
| | | TEMP | 0.000 | 0.000 | 0.000 | 0.000 | 0.000 | 0.000 | 0.000 | 0.000 |
| | 98170 | OTHR | 0.004 | 0.880 | -0.384 | 0.610 | 0.618 | -0.030 | -0.054 | -0.129 |
| | | TEMP | 0.000 | 0.000 | 0.000 | 0.000 | 0.000 | 0.000 | 0.000 | 0.000 |
| | 98109 | OTHR | 0.356 | 1.566 | -0.142 | 0.995 | 1.912 | -0.221 | -0.050 | -0.266 |
| | | TEMP | 0.000 | 0.000 | 0.000 | 0.000 | 0.000 | 0.000 | 0.000 | 0.000 |
| 17 Topslab @ RCCV | 98174 | OTHR | 0.671 | 1.195 | -0.122 | 0.081 | 0.267 | 0.473 | 0.200 | -0.198 |
| | | TEMP | 0.000 | 0.000 | 0.000 | 0.000 | 0.000 | 0.000 | 0.000 | 0.000 |
| | 98197 | OTHR | 0.312 | 1.220 | -0.231 | -0.173 | -1.590 | -0.120 | -0.070 | -1.105 |
| | | TEMP | 0.000 | 0.000 | 0.000 | 0.000 | 0.000 | 0.000 | 0.000 | 0.000 |
| | 98103 | OTHR | 0.665 | 1.699 | -0.091 | -0.975 | 0.423 | -0.331 | -0.898 | -0.215 |
| | | TEMP | 0.000 | 0.000 | 0.000 | 0.000 | 0.000 | 0.000 | 0.000 | 0.000 |

*OTHR: Loads other than thermal loads*
*TEMP: Thermal loads*
*S/P Slab: Suppression Pool Slab*
*SI to U.S. Customary units conversion (SI units are the controlling units and U.S. Customary units are for reference only):*
*1 MN/m = $6.852 \times 10^4$ lbf/ft*
*1 MNm/m = $2.248 \times 10^5$ lbf-ft/ft*

## Table 3G.1-23 Combined Forces and Moments: RCCV, Selected Load Combination CV-7a

| Location | Element ID | | Nx (MN/m) | Ny (MN/m) | Nxy (MN/m) | Mx (MNm/m) | My (MNm/m) | Mxy (MNm/m) | Qx (MN/m) | Qy (MN/m) |
|---|---|---|---|---|---|---|---|---|---|---|
| 1 RPV Pedestal Bottom | 5006 | OTHR | -2.287 | -7.803 | -0.046 | 0.409 | 2.405 | 0.034 | -0.011 | 1.359 |
| | | TEMP | -3.476 | 1.649 | -0.329 | -6.696 | -6.462 | -0.046 | 0.105 | 1.012 |
| | | HYDR | 1.879 | 5.303 | 0.129 | 0.382 | 2.323 | 0.017 | 0.024 | 1.086 |
| | 5013 | OTHR | -2.812 | -8.194 | 0.042 | 0.347 | 2.600 | -0.003 | -0.005 | 1.546 |
| | | TEMP | -3.121 | 1.796 | -0.097 | -6.854 | -6.851 | -0.006 | 0.027 | 0.925 |
| | | HYDR | 2.099 | 5.570 | 0.515 | 0.426 | 2.519 | 0.001 | 0.018 | 1.220 |
| | 5024 | OTHR | -2.648 | -7.584 | 0.053 | 0.521 | 2.336 | -0.011 | 0.012 | 1.331 |
| | | TEMP | -3.419 | 1.892 | -0.003 | -6.894 | -6.129 | -0.026 | -0.036 | 1.045 |
| | | HYDR | 2.282 | 5.413 | 0.243 | 0.434 | 2.450 | 0.013 | 0.024 | 1.195 |
| 2 RPV Pedestal Mid-Height | 6006 | OTHR | 1.306 | -7.535 | -0.005 | -0.056 | -0.228 | 0.023 | 0.076 | -0.362 |
| | | TEMP | 0.080 | 1.775 | 0.154 | -6.175 | -4.043 | 0.264 | 0.065 | -1.515 |
| | | HYDR | 0.446 | 5.872 | 0.309 | 0.056 | 0.390 | 0.033 | 0.047 | 0.082 |
| | 6013 | OTHR | 1.017 | -7.496 | 0.181 | -0.209 | -0.288 | 0.004 | -0.002 | -0.344 |
| | | TEMP | -0.061 | 1.444 | -0.177 | -6.419 | -3.904 | -0.057 | -0.026 | -1.669 |
| | | HYDR | 0.466 | 5.457 | 0.487 | 0.105 | 0.375 | 0.012 | 0.016 | 0.079 |
| | 6024 | OTHR | 1.379 | -5.512 | -0.524 | 0.299 | 0.059 | 0.015 | -0.010 | -0.271 |
| | | TEMP | -0.245 | 2.050 | 0.059 | -7.408 | -2.297 | -0.304 | -0.003 | -1.547 |
| | | HYDR | 0.457 | 4.341 | 0.599 | 0.078 | 0.360 | 0.027 | 0.026 | 0.028 |
| 3 RPV Pedestal Top | 6606 | OTHR | 0.647 | -6.317 | 0.792 | 0.426 | 2.771 | 0.028 | 0.237 | -0.968 |
| | | TEMP | 20.997 | 2.192 | 0.564 | -6.643 | -5.510 | -0.035 | -1.941 | 0.870 |
| | | HYDR | 0.816 | 5.248 | 0.908 | 0.710 | 4.278 | 0.198 | 0.644 | 1.214 |
| | 6613 | OTHR | 0.323 | -6.514 | -0.107 | 0.288 | 2.811 | -0.098 | -0.098 | -1.028 |
| | | TEMP | 21.088 | 1.964 | -0.425 | -6.702 | -5.546 | 0.139 | 2.063 | 0.862 |
| | | HYDR | 0.797 | 4.919 | 0.398 | 0.627 | 4.016 | 0.173 | 0.420 | 1.197 |
| | 6624 | OTHR | 0.876 | -6.161 | 0.319 | 0.402 | 2.455 | 0.137 | 0.067 | -0.779 |
| | | TEMP | 21.900 | 2.601 | 0.228 | -6.671 | -5.665 | 0.005 | -2.338 | 1.055 |
| | | HYDR | 0.728 | 5.071 | 0.435 | 0.617 | 3.907 | 0.196 | 0.555 | 1.147 |
| 4 RCCV Wetwell Bottom | 1806 | OTHR | 0.322 | -1.857 | -0.072 | 0.383 | 2.280 | 0.018 | 0.011 | 0.800 |
| | | TEMP | 2.533 | 0.468 | -0.194 | -4.438 | -8.138 | 0.077 | 0.083 | -1.750 |
| | | HYDR | 0.961 | 1.171 | 0.676 | 0.558 | 3.366 | 0.014 | 0.008 | 1.396 |
| | 1813 | OTHR | 0.127 | -2.285 | 0.197 | 0.376 | 2.404 | -0.001 | -0.003 | 0.913 |
| | | TEMP | 1.866 | -2.167 | -0.420 | -4.274 | -7.773 | -0.025 | -0.007 | -1.523 |
| | | HYDR | 0.921 | 1.191 | 0.607 | 0.561 | 3.342 | 0.011 | 0.005 | 1.422 |
| | 1824 | OTHR | 0.560 | -2.123 | 0.005 | 0.375 | 2.182 | 0.008 | -0.005 | 0.842 |
| | | TEMP | 2.926 | -2.481 | 0.046 | -4.432 | -8.134 | 0.020 | -0.085 | -1.667 |
| | | HYDR | 1.036 | 0.822 | 0.573 | 0.563 | 3.392 | 0.013 | 0.010 | 1.440 |
| 5 RCCV Wetwell Mid-Height | 2606 | OTHR | 2.697 | -1.395 | -0.128 | -0.168 | -0.660 | -0.001 | 0.008 | -0.041 |
| | | TEMP | 1.379 | 0.586 | -0.171 | -3.308 | -1.033 | 0.018 | 0.039 | 0.074 |
| | | HYDR | 1.233 | 0.863 | 0.779 | 0.072 | 0.415 | 0.034 | 0.005 | 0.255 |
| | 2613 | OTHR | 2.356 | -2.073 | 0.187 | -0.193 | -0.684 | 0.000 | -0.007 | 0.021 |
| | | TEMP | 0.111 | -2.544 | -0.109 | -3.090 | -1.052 | 0.009 | -0.075 | 0.370 |
| | | HYDR | 1.197 | 0.898 | 0.639 | 0.061 | 0.325 | 0.032 | 0.014 | 0.207 |
| | 2624 | OTHR | 2.683 | -1.650 | -0.014 | -0.119 | -0.695 | -0.003 | 0.004 | -0.080 |
| | | TEMP | 0.965 | -2.909 | -0.087 | -3.293 | -0.935 | -0.026 | 0.067 | 0.189 |
| | | HYDR | 1.396 | 0.751 | 0.518 | 0.094 | 0.326 | 0.008 | 0.009 | 0.195 |
| 6 RCCV Wetwell Top | 3406 | OTHR | 2.583 | -0.732 | 0.088 | -0.093 | -0.366 | 0.101 | -0.058 | 0.034 |
| | | TEMP | 11.723 | 1.461 | 0.327 | -4.151 | -8.468 | -0.227 | 0.461 | 3.349 |
| | | HYDR | 0.925 | 0.689 | 0.833 | 0.140 | 0.541 | 0.198 | 0.231 | 0.288 |
| | 3413 | OTHR | 2.211 | -1.923 | 0.125 | -0.120 | -0.331 | -0.124 | 0.067 | 0.045 |
| | | TEMP | 8.032 | -3.439 | 0.044 | -4.382 | -9.151 | -0.402 | 0.538 | 3.335 |
| | | HYDR | 0.721 | 0.752 | 0.525 | 0.073 | 0.374 | 0.097 | 0.102 | 0.243 |
| | 3424 | OTHR | 2.198 | -0.989 | 0.068 | 0.007 | -0.016 | 0.095 | -0.041 | -0.022 |
| | | TEMP | 10.292 | -4.166 | 0.471 | -3.681 | -5.045 | -0.039 | -0.006 | 2.165 |
| | | HYDR | 0.751 | 0.626 | 0.408 | 0.032 | 0.340 | 0.055 | 0.081 | 0.216 |

## Table 3G.1-23 Combined Forces and Moments: RCCV, Selected Load Combination CV-7a (Continued)

| Location | Element ID | | Nx (MN/m) | Ny (MN/m) | Nxy (MN/m) | Mx (MNm/m) | My (MNm/m) | Mxy (MNm/m) | Qx (MN/m) | Qy (MN/m) |
|---|---|---|---|---|---|---|---|---|---|---|
| 7 RCCV Drywell Bottom | 3606 | OTHR | 2.537 | -0.105 | 0.004 | -0.012 | 0.119 | 0.132 | -0.010 | 0.531 |
| | | TEMP | 8.504 | 1.377 | 0.674 | -5.342 | -9.036 | 0.607 | 0.534 | -1.980 |
| | | HYDR | 0.961 | 0.714 | 0.535 | 0.125 | 0.496 | 0.056 | 0.221 | 0.186 |
| | 3613 | OTHR | 2.228 | -1.361 | 0.209 | 0.013 | 0.461 | -0.112 | 0.005 | 0.768 |
| | | TEMP | 4.607 | -4.161 | 1.005 | -4.955 | -6.227 | -0.363 | 0.317 | -0.820 |
| | | HYDR | 0.665 | 0.611 | 0.213 | 0.107 | 0.486 | 0.119 | 0.106 | 0.166 |
| | 3624 | OTHR | 2.197 | -0.462 | 0.056 | 0.126 | 0.630 | 0.096 | 0.007 | 0.611 |
| | | TEMP | -4.291 | -6.043 | 0.252 | -0.934 | -2.498 | 0.068 | 0.000 | 0.351 |
| | | HYDR | 0.597 | 0.407 | 0.433 | 0.100 | 0.456 | 0.040 | 0.074 | 0.135 |
| 8 RCCV Drywell Mid-Height | 4006 | OTHR | 1.673 | 0.298 | 0.077 | -0.061 | -0.208 | 0.030 | 0.034 | -0.338 |
| | | TEMP | 5.952 | 2.178 | 0.212 | -5.110 | -5.057 | 0.011 | -0.126 | -0.683 |
| | | HYDR | 0.956 | 0.591 | 0.256 | 0.050 | 0.486 | 0.032 | 0.165 | 0.156 |
| | 4013 | OTHR | 1.716 | -1.596 | 0.362 | -0.143 | -0.411 | 0.010 | -0.011 | -0.283 |
| | | TEMP | 4.287 | -5.850 | 1.041 | -4.672 | -4.289 | 0.014 | -0.132 | -0.308 |
| | | HYDR | 0.706 | 0.748 | 0.111 | 0.058 | 0.105 | 0.052 | 0.061 | 0.119 |
| | 4976 | OTHR | 1.740 | -0.073 | -0.025 | 0.044 | 0.006 | 0.001 | -0.014 | -0.409 |
| | | TEMP | -2.660 | -5.335 | 0.580 | -0.954 | -1.780 | 0.003 | 0.013 | -0.584 |
| | | HYDR | 0.283 | 0.329 | 0.312 | 0.043 | 0.045 | 0.019 | 0.008 | 0.096 |
| 9 RCCV Drywell Top | 4406 | OTHR | 0.629 | 0.603 | 0.169 | 0.405 | 2.385 | 0.017 | 0.013 | -0.737 |
| | | TEMP | 6.433 | 1.711 | -0.232 | -4.475 | -3.816 | 0.299 | 0.087 | -0.150 |
| | | HYDR | 0.301 | 0.362 | 0.066 | 0.108 | 0.442 | 0.083 | 0.088 | 0.339 |
| | 4413 | OTHR | 0.017 | -1.850 | 0.263 | 0.286 | 2.323 | 0.050 | 0.008 | -0.850 |
| | | TEMP | 0.711 | -6.632 | -0.292 | -4.753 | -4.467 | 0.253 | -0.243 | 0.643 |
| | | HYDR | 0.754 | 0.888 | 0.339 | 0.335 | 0.363 | 0.254 | 0.118 | 0.389 |
| | 4424 | OTHR | 1.321 | 0.141 | -0.039 | 0.466 | 2.527 | 0.026 | 0.002 | -0.774 |
| | | TEMP | -5.846 | -4.171 | 0.767 | -0.363 | 1.129 | -0.024 | -0.022 | -1.462 |
| | | HYDR | 0.183 | 0.262 | 0.219 | 0.052 | 0.309 | 0.004 | 0.007 | 0.128 |
| 10 Basemat @ Center | 80003 | OTHR | -2.778 | -1.498 | 0.148 | -1.154 | -0.552 | -0.045 | 0.150 | -0.101 |
| | | TEMP | -4.270 | -5.140 | 0.021 | -8.130 | -8.102 | -0.039 | 0.029 | -0.008 |
| | | HYDR | 1.283 | 1.173 | 0.112 | 4.575 | 4.159 | 0.065 | 0.277 | 0.266 |
| | 80007 | OTHR | -2.803 | -1.505 | 0.133 | -1.078 | -0.530 | -0.027 | 0.007 | -0.163 |
| | | TEMP | -4.296 | -5.104 | 0.056 | -8.096 | -8.099 | -0.037 | 0.028 | -0.009 |
| | | HYDR | 1.280 | 1.155 | 0.094 | 4.490 | 4.145 | 0.068 | 0.228 | 0.317 |
| | 80012 | OTHR | -2.856 | -1.493 | 0.134 | -1.072 | -0.527 | -0.031 | -0.136 | -0.016 |
| | | TEMP | -4.302 | -5.040 | 0.042 | -8.079 | -8.109 | -0.032 | 0.024 | -0.001 |
| | | HYDR | 1.250 | 1.127 | 0.072 | 4.442 | 4.108 | 0.058 | 0.351 | 0.201 |
| 11 Basemat Inside RPV Pedestal | 80206 | OTHR | -2.442 | -1.655 | 0.230 | -2.898 | -2.684 | 0.661 | 0.928 | -1.116 |
| | | TEMP | -4.260 | -5.523 | 0.137 | -8.575 | -8.460 | 0.003 | 0.005 | -0.035 |
| | | HYDR | 1.472 | 1.255 | 0.219 | 6.569 | 5.991 | 0.976 | 0.802 | 0.838 |
| | 80213 | OTHR | -2.542 | -1.498 | 0.084 | -2.063 | -3.401 | -0.108 | -0.079 | -1.479 |
| | | TEMP | -4.445 | -5.127 | 0.161 | -8.289 | -8.565 | -0.151 | -0.018 | -0.103 |
| | | HYDR | 1.362 | 1.183 | 0.128 | 5.525 | 6.846 | 0.593 | 0.475 | 1.091 |
| | 80224 | OTHR | -3.024 | -1.917 | 0.059 | -3.067 | -2.134 | -0.157 | -1.163 | -0.142 |
| | | TEMP | -4.372 | -4.948 | 0.081 | -8.177 | -8.193 | -0.045 | -0.038 | 0.010 |
| | | HYDR | 1.226 | 0.902 | 0.114 | 6.560 | 5.212 | 0.461 | 1.049 | 0.380 |

## Table 3G.1-23 Combined Forces and Moments: RCCV, Selected Load Combination CV-7a (Continued)

| Location | Element ID | | Nx (MN/m) | Ny (MN/m) | Nxy (MN/m) | Mx (MNm/m) | My (MNm/m) | Mxy (MNm/m) | Qx (MN/m) | Qy (MN/m) |
|---|---|---|---|---|---|---|---|---|---|---|
| 12 S/P Slab @ RPV | 83306 | OTHR | -0.025 | 1.218 | -0.421 | -0.381 | 0.552 | -0.067 | 1.915 | -0.037 |
| | | TEMP | -10.607 | 10.981 | 0.454 | -4.700 | -2.770 | 0.032 | -0.288 | 0.000 |
| | | HYDR | 1.543 | 1.102 | 0.524 | 1.382 | 0.906 | 0.093 | 2.882 | 0.066 |
| | 83313 | OTHR | 0.167 | 0.963 | -0.090 | -0.322 | 0.566 | 0.042 | 1.928 | 0.051 |
| | | TEMP | -10.822 | 11.242 | -0.850 | -4.737 | -2.848 | -0.039 | -0.302 | -0.028 |
| | | HYDR | 1.473 | 1.129 | 0.322 | 1.340 | 0.825 | 0.152 | 2.839 | 0.054 |
| | 83324 | OTHR | 0.205 | 1.447 | 0.051 | -0.420 | 0.516 | -0.038 | 1.874 | -0.056 |
| | | TEMP | -10.702 | 11.862 | 1.279 | -4.487 | -2.654 | 0.006 | -0.156 | 0.046 |
| | | HYDR | 1.528 | 1.190 | 0.345 | 1.265 | 0.729 | 0.108 | 2.762 | 0.063 |
| 13 S/P Slab @ Center | 83406 | OTHR | 0.240 | 0.901 | -0.312 | -2.866 | -0.718 | -0.032 | -0.162 | 0.003 |
| | | TEMP | -6.490 | 4.881 | -0.530 | -3.815 | -3.181 | -0.001 | -0.306 | 0.016 |
| | | HYDR | 1.511 | 1.103 | 0.306 | 4.347 | 1.357 | 0.069 | 0.408 | 0.004 |
| | 83413 | OTHR | 0.565 | 0.691 | -0.019 | -2.838 | -0.725 | -0.004 | -0.152 | 0.002 |
| | | TEMP | -6.986 | 5.307 | 0.315 | -3.900 | -3.257 | -0.015 | -0.278 | -0.011 |
| | | HYDR | 1.444 | 1.138 | 0.180 | 4.326 | 1.324 | 0.080 | 0.394 | 0.004 |
| | 83424 | OTHR | 0.410 | 1.115 | 0.029 | -2.807 | -0.716 | 0.005 | -0.184 | 0.000 |
| | | TEMP | -6.630 | 5.823 | 0.078 | -3.895 | -3.148 | -0.003 | -0.210 | 0.009 |
| | | HYDR | 1.507 | 1.226 | 0.182 | 4.294 | 1.302 | 0.068 | 0.386 | 0.004 |
| 14 S/P Slab @ RCCV | 83506 | OTHR | 0.376 | 0.740 | -0.238 | 1.382 | -0.183 | -0.026 | -1.782 | -0.001 |
| | | TEMP | -3.948 | 2.320 | -0.446 | -2.906 | -3.131 | -0.038 | -0.275 | 0.016 |
| | | HYDR | 1.408 | 1.094 | 0.225 | 2.419 | 0.376 | 0.023 | 2.689 | 0.014 |
| | 83513 | OTHR | 0.740 | 0.628 | 0.003 | 1.364 | -0.190 | -0.005 | -1.771 | 0.002 |
| | | TEMP | -4.567 | 2.419 | 0.440 | -3.190 | -3.174 | -0.008 | -0.192 | -0.001 |
| | | HYDR | 1.347 | 1.138 | 0.178 | 2.366 | 0.364 | 0.023 | 2.683 | 0.010 |
| | 83524 | OTHR | 0.480 | 1.002 | 0.030 | 1.493 | -0.135 | -0.001 | -1.801 | 0.001 |
| | | TEMP | -4.038 | 3.201 | -0.017 | -3.278 | -3.153 | 0.013 | -0.168 | -0.005 |
| | | HYDR | 1.417 | 1.245 | 0.172 | 2.365 | 0.340 | 0.020 | 2.677 | 0.010 |
| 15 Topslab @ Drywell Head Opening | 98120 | OTHR | 0.055 | 1.006 | 1.223 | 1.048 | 0.810 | 0.451 | 0.439 | -0.886 |
| | | TEMP | -7.068 | -4.258 | -0.770 | 0.956 | 0.732 | 2.765 | -0.161 | -0.002 |
| | | HYDR | 0.343 | 0.110 | 0.142 | 0.073 | 0.106 | 0.053 | 0.013 | 0.028 |
| | 98135 | OTHR | -0.896 | -0.445 | -0.543 | 0.896 | -0.228 | 0.171 | 0.188 | -1.324 |
| | | TEMP | -8.729 | -5.283 | 0.235 | 3.147 | -2.057 | -1.132 | 0.380 | -0.267 |
| | | HYDR | 0.547 | 0.079 | 0.114 | 0.098 | 0.030 | 0.024 | 0.007 | 0.012 |
| | 98104 | OTHR | -0.260 | 2.515 | -0.837 | 0.891 | 2.941 | -0.344 | -0.523 | -0.787 |
| | | TEMP | -4.999 | -1.752 | 0.585 | -1.461 | 3.712 | -1.500 | 0.185 | -0.214 |
| | | HYDR | 0.101 | 0.422 | 0.164 | 0.030 | 0.178 | 0.039 | 0.008 | 0.065 |
| 16 Topslab @ Center | 98149 | OTHR | -0.143 | 1.753 | -0.555 | 0.497 | 0.259 | 0.291 | 0.075 | 0.329 |
| | | TEMP | -6.075 | -2.540 | -1.137 | 2.229 | 2.310 | 0.496 | 0.037 | 0.048 |
| | | HYDR | 0.506 | 0.266 | 0.055 | 0.068 | 0.053 | 0.037 | 0.023 | 0.029 |
| | 98170 | OTHR | 0.015 | 1.233 | -0.449 | 0.735 | 0.818 | -0.036 | -0.026 | -0.063 |
| | | TEMP | -5.510 | -3.566 | -1.042 | 2.141 | 2.864 | -0.042 | 0.030 | 0.389 |
| | | HYDR | 0.367 | 0.263 | 0.176 | 0.052 | 0.074 | 0.017 | 0.007 | 0.007 |
| | 98109 | OTHR | 0.404 | 1.649 | -0.158 | 1.143 | 2.125 | -0.248 | -0.058 | -0.289 |
| | | TEMP | -6.256 | -0.887 | 0.773 | 1.219 | 2.564 | -0.119 | 0.329 | -0.005 |
| | | HYDR | 0.065 | 0.222 | 0.272 | 0.041 | 0.120 | 0.037 | 0.007 | 0.019 |
| 17 Topslab @ RCCV | 98174 | OTHR | 0.775 | 1.504 | -0.146 | 0.258 | 0.459 | 0.506 | 0.221 | -0.153 |
| | | TEMP | -4.871 | -2.689 | -0.476 | 2.352 | 3.211 | 0.255 | -0.023 | 0.434 |
| | | HYDR | 0.430 | 0.275 | 0.097 | 0.162 | 0.179 | 0.117 | 0.059 | 0.053 |
| | 98197 | OTHR | 0.479 | 1.612 | -0.231 | -0.168 | -1.929 | -0.140 | -0.072 | -1.169 |
| | | TEMP | -7.584 | -2.926 | -1.360 | 1.917 | 3.110 | 0.130 | 0.154 | -0.447 |
| | | HYDR | 0.602 | 0.383 | 0.154 | 0.104 | 0.187 | 0.049 | 0.023 | 0.052 |
| | 98103 | OTHR | 0.750 | 1.850 | -0.098 | -1.204 | 0.430 | -0.373 | -1.049 | -0.241 |
| | | TEMP | -6.577 | -2.458 | -0.070 | 3.431 | 3.308 | 0.118 | 0.450 | 0.084 |
| | | HYDR | 0.085 | 0.251 | 0.323 | 0.127 | 0.113 | 0.021 | 0.033 | 0.002 |

*OTHR: Loads other than thermal and hydrodyanamic loads*
*TEMP: Thermal loads*
*HYDR: Hydrodyanmic loads*
*S/P: Suppression Pool*
*SI to U.S. Customary units conversion (SI units are the controlling units and U.S. Customary units are for reference only):*
*1 MN/m = $6.852 \times 10^4$ lbf/ft*
*1 MNm/m = $2.248 \times 10^5$ lbf-ft/ft*

## Table 3G.1-24 Combined Forces and Moments: RCCV, Selected Load Combination CV-7b

| Location | Element ID | | Nx (MN/m) | Ny (MN/m) | Nxy (MN/m) | Mx (MNm/m) | My (MNm/m) | Mxy (MNm/m) | Qx (MN/m) | Qy (MN/m) |
|---|---|---|---|---|---|---|---|---|---|---|
| 1 RPV Pedestal Bottom | 5006 | OTHR | -2.643 | -8.287 | -0.049 | 0.527 | 3.110 | 0.037 | -0.012 | 1.672 |
| | | TEMP | -12.849 | 0.250 | -0.523 | -16.011 | -12.625 | -0.093 | 0.227 | 4.158 |
| | | HYDR | 1.386 | 3.966 | 0.120 | 0.281 | 1.716 | 0.012 | 0.017 | 0.800 |
| | 5013 | OTHR | -3.176 | -8.631 | 0.033 | 0.462 | 3.296 | -0.003 | -0.005 | 1.862 |
| | | TEMP | -12.356 | 0.343 | -0.104 | -16.288 | -13.239 | -0.007 | 0.021 | 4.062 |
| | | HYDR | 1.546 | 4.064 | 0.486 | 0.313 | 1.855 | 0.001 | 0.012 | 0.897 |
| | 5024 | OTHR | -3.003 | -7.940 | 0.059 | 0.643 | 2.998 | -0.015 | 0.014 | 1.621 |
| | | TEMP | -12.862 | 0.231 | 0.003 | -16.285 | -11.829 | -0.073 | -0.054 | 4.265 |
| | | HYDR | 1.685 | 3.975 | 0.243 | 0.322 | 1.818 | 0.009 | 0.017 | 0.885 |
| 2 RPV Pedestal Mid-Height | 6006 | OTHR | 1.628 | -8.011 | -0.037 | -0.071 | -0.293 | 0.022 | 0.080 | -0.407 |
| | | TEMP | -2.408 | 0.615 | 0.443 | -16.093 | -14.923 | 0.436 | 0.146 | -1.774 |
| | | HYDR | 0.355 | 4.530 | 0.223 | 0.040 | 0.318 | 0.025 | 0.036 | 0.059 |
| | 6013 | OTHR | 1.327 | -7.936 | 0.172 | -0.225 | -0.356 | 0.003 | -0.001 | -0.389 |
| | | TEMP | -2.624 | 0.212 | -0.206 | -16.582 | -14.795 | -0.048 | -0.033 | -2.015 |
| | | HYDR | 0.348 | 4.059 | 0.457 | 0.077 | 0.290 | 0.008 | 0.011 | 0.058 |
| | 6024 | OTHR | 1.738 | -5.780 | -0.553 | 0.307 | 0.016 | 0.015 | -0.013 | -0.292 |
| | | TEMP | -2.728 | 0.667 | 0.076 | -18.533 | -11.361 | -0.661 | 0.020 | -1.697 |
| | | HYDR | 0.347 | 3.315 | 0.485 | 0.055 | 0.280 | 0.022 | 0.018 | 0.024 |
| 3 RPV Pedestal Top | 6606 | OTHR | 0.859 | -6.851 | 0.808 | 0.482 | 3.124 | 0.014 | 0.276 | -1.019 |
| | | TEMP | 8.837 | 0.682 | 0.577 | -16.163 | -12.297 | 0.057 | -1.395 | -2.012 |
| | | HYDR | 0.734 | 3.973 | 0.751 | 0.565 | 3.241 | 0.197 | 0.624 | 0.881 |
| | 6613 | OTHR | 0.507 | -7.063 | -0.123 | 0.339 | 3.181 | -0.088 | -0.130 | -1.088 |
| | | TEMP | 9.213 | 0.732 | -0.359 | -16.199 | -12.536 | 0.030 | 1.518 | -1.952 |
| | | HYDR | 0.698 | 3.604 | 0.413 | 0.487 | 2.967 | 0.148 | 0.400 | 0.865 |
| | 6624 | OTHR | 1.087 | -6.649 | 0.320 | 0.458 | 2.794 | 0.127 | 0.098 | -0.825 |
| | | TEMP | 9.545 | 0.848 | 0.253 | -16.174 | -12.377 | 0.066 | -1.768 | -1.800 |
| | | HYDR | 0.656 | 3.799 | 0.358 | 0.487 | 2.933 | 0.184 | 0.530 | 0.838 |
| 4 RCCV Wetwell Bottom | 1806 | OTHR | 0.593 | -1.111 | -0.117 | 0.494 | 2.945 | 0.018 | 0.011 | 1.019 |
| | | TEMP | -1.533 | -1.021 | -0.228 | -10.248 | -14.646 | 0.090 | 0.096 | -1.555 |
| | | HYDR | 0.744 | 0.794 | 0.484 | 0.391 | 2.348 | 0.010 | 0.006 | 0.984 |
| | 1813 | OTHR | 0.387 | -1.645 | 0.191 | 0.486 | 3.073 | -0.002 | -0.003 | 1.141 |
| | | TEMP | -2.037 | -4.249 | -0.394 | -10.039 | -14.121 | -0.043 | -0.006 | -1.254 |
| | | HYDR | 0.721 | 0.812 | 0.419 | 0.394 | 2.340 | 0.009 | 0.005 | 0.997 |
| | 1824 | OTHR | 0.855 | -1.366 | 0.010 | 0.483 | 2.827 | 0.009 | -0.005 | 1.063 |
| | | TEMP | -1.011 | -4.103 | 0.136 | -10.224 | -14.384 | 0.028 | -0.105 | -1.321 |
| | | HYDR | 0.813 | 0.553 | 0.410 | 0.403 | 2.410 | 0.011 | 0.009 | 1.025 |
| 5 RCCV Wetwell Mid-Height | 2606 | OTHR | 3.471 | -0.643 | -0.184 | -0.214 | -0.854 | -0.001 | 0.009 | -0.035 |
| | | TEMP | -4.269 | -1.249 | -0.234 | -9.962 | -7.559 | 0.001 | 0.044 | 0.117 |
| | | HYDR | 0.909 | 0.588 | 0.546 | 0.055 | 0.314 | 0.023 | 0.003 | 0.189 |
| | 2613 | OTHR | 3.063 | -1.473 | 0.184 | -0.239 | -0.866 | -0.001 | -0.008 | 0.030 |
| | | TEMP | -5.197 | -5.323 | -0.038 | -9.725 | -7.432 | -0.015 | -0.093 | 0.418 |
| | | HYDR | 0.872 | 0.617 | 0.438 | 0.046 | 0.247 | 0.021 | 0.010 | 0.154 |
| | 2624 | OTHR | 3.435 | -0.919 | -0.018 | -0.154 | -0.885 | -0.004 | 0.005 | -0.090 |
| | | TEMP | -4.923 | -4.754 | -0.111 | -10.020 | -7.637 | -0.043 | 0.078 | 0.194 |
| | | HYDR | 1.010 | 0.508 | 0.363 | 0.067 | 0.252 | 0.006 | 0.007 | 0.149 |
| 6 RCCV Wetwell Top | 3406 | OTHR | 3.219 | 0.028 | 0.033 | -0.093 | -0.342 | 0.079 | -0.041 | 0.008 |
| | | TEMP | 5.196 | -0.343 | 0.501 | -10.839 | -14.129 | 0.028 | 0.144 | 2.477 |
| | | HYDR | 0.656 | 0.480 | 0.585 | 0.102 | 0.399 | 0.139 | 0.162 | 0.204 |
| | 3413 | OTHR | 2.758 | -1.348 | 0.142 | -0.128 | -0.275 | -0.099 | 0.054 | 0.009 |
| | | TEMP | 3.430 | -7.154 | 0.362 | -10.781 | -14.124 | -0.109 | 0.133 | 2.640 |
| | | HYDR | 0.505 | 0.527 | 0.365 | 0.052 | 0.272 | 0.071 | 0.073 | 0.167 |
| | 3424 | OTHR | 2.729 | -0.248 | 0.054 | 0.037 | 0.161 | 0.069 | -0.027 | -0.095 |
| | | TEMP | 2.843 | -6.398 | 0.484 | -9.990 | -9.736 | 0.045 | -0.108 | 0.896 |
| | | HYDR | 0.515 | 0.430 | 0.287 | 0.022 | 0.227 | 0.039 | 0.057 | 0.148 |

## Table 3G.1-24 Combined Forces and Moments: RCCV, Selected Load Combination CV-7b (Continued)

| Location | Element ID | | Nx (MN/m) | Ny (MN/m) | Nxy (MN/m) | Mx (MNm/m) | My (MNm/m) | Mxy (MNm/m) | Qx (MN/m) | Qy (MN/m) |
|---|---|---|---|---|---|---|---|---|---|---|
| 7 RCCV Drywell Bottom | 3606 | OTHR | 3.117 | 0.581 | -0.061 | -0.022 | 0.067 | 0.118 | -0.004 | 0.591 |
| | | TEMP | 0.851 | -0.258 | 0.079 | -12.665 | -14.960 | 0.282 | 0.179 | -0.838 |
| | | HYDR | 0.686 | 0.499 | 0.370 | 0.087 | 0.343 | 0.037 | 0.156 | 0.129 |
| | 3613 | OTHR | 2.733 | -0.859 | 0.248 | -0.016 | 0.404 | -0.083 | 0.005 | 0.845 |
| | | TEMP | -0.941 | -8.499 | 1.390 | -12.337 | -13.241 | -0.243 | 0.024 | -0.345 |
| | | HYDR | 0.472 | 0.428 | 0.150 | 0.074 | 0.339 | 0.084 | 0.076 | 0.116 |
| | 3624 | OTHR | 2.713 | 0.258 | 0.023 | 0.119 | 0.592 | 0.069 | 0.009 | 0.680 |
| | | TEMP | -10.577 | -8.035 | 0.298 | -7.210 | -6.858 | 0.089 | -0.061 | 1.477 |
| | | HYDR | 0.410 | 0.275 | 0.305 | 0.071 | 0.324 | 0.028 | 0.052 | 0.095 |
| 8 RCCV Drywell Mid-Height | 4006 | OTHR | 1.969 | 0.955 | 0.059 | -0.036 | -0.180 | 0.041 | 0.032 | -0.456 |
| | | TEMP | 1.893 | 0.841 | -0.323 | -12.242 | -12.219 | 0.193 | -0.154 | -0.810 |
| | | HYDR | 0.681 | 0.411 | 0.172 | 0.035 | 0.337 | 0.023 | 0.117 | 0.109 |
| | 4013 | OTHR | 2.004 | -1.149 | 0.388 | -0.166 | -0.422 | 0.010 | -0.011 | -0.388 |
| | | TEMP | 1.197 | -10.529 | 1.292 | -12.197 | -11.585 | 0.046 | -0.165 | -0.457 |
| | | HYDR | 0.500 | 0.530 | 0.072 | 0.039 | 0.071 | 0.037 | 0.044 | 0.082 |
| | 4976 | OTHR | 2.136 | 0.576 | -0.065 | 0.049 | 0.039 | 0.002 | -0.015 | -0.530 |
| | | TEMP | -7.092 | -6.953 | 0.638 | -7.681 | -8.655 | 0.012 | 0.039 | -0.305 |
| | | HYDR | 0.194 | 0.228 | 0.217 | 0.029 | 0.033 | 0.013 | 0.006 | 0.069 |
| 9 RCCV Drywell Top | 4406 | OTHR | 0.682 | 1.212 | 0.232 | 0.571 | 3.241 | 0.028 | 0.017 | -0.997 |
| | | TEMP | 6.726 | 0.270 | -1.390 | -11.635 | -9.864 | 0.510 | 0.460 | -0.602 |
| | | HYDR | 0.216 | 0.252 | 0.050 | 0.075 | 0.309 | 0.059 | 0.062 | 0.235 |
| | 4413 | OTHR | 0.071 | -1.461 | 0.289 | 0.395 | 3.060 | 0.058 | 0.010 | -1.085 |
| | | TEMP | -0.989 | -11.897 | -0.372 | -12.126 | -10.994 | 0.411 | -0.180 | 0.175 |
| | | HYDR | 0.515 | 0.626 | 0.245 | 0.237 | 0.250 | 0.181 | 0.084 | 0.270 |
| | 4424 | OTHR | 1.588 | 0.692 | -0.074 | 0.577 | 3.179 | 0.029 | 0.002 | -0.965 |
| | | TEMP | -10.172 | -5.565 | 0.973 | -7.107 | -5.872 | -0.070 | -0.009 | -1.761 |
| | | HYDR | 0.128 | 0.188 | 0.151 | 0.037 | 0.220 | 0.003 | 0.005 | 0.087 |
| 10 Basemat @ Center | 80003 | OTHR | -2.525 | -1.217 | 0.146 | -2.743 | -2.077 | -0.042 | 0.118 | -0.074 |
| | | TEMP | -1.587 | -2.420 | -0.001 | -8.464 | -8.777 | -0.040 | 0.022 | -0.010 |
| | | HYDR | 0.927 | 0.853 | 0.083 | 3.426 | 3.125 | 0.057 | 0.241 | 0.224 |
| | 80007 | OTHR | -2.546 | -1.223 | 0.131 | -2.664 | -2.054 | -0.023 | 0.014 | -0.120 |
| | | TEMP | -1.600 | -2.375 | 0.039 | -8.444 | -8.779 | -0.040 | 0.014 | -0.014 |
| | | HYDR | 0.925 | 0.836 | 0.072 | 3.359 | 3.115 | 0.061 | 0.210 | 0.259 |
| | 80012 | OTHR | -2.601 | -1.209 | 0.133 | -2.658 | -2.050 | -0.027 | -0.091 | -0.010 |
| | | TEMP | -1.607 | -2.298 | 0.028 | -8.433 | -8.799 | -0.031 | 0.005 | 0.001 |
| | | HYDR | 0.901 | 0.812 | 0.055 | 3.323 | 3.083 | 0.048 | 0.293 | 0.182 |
| 11 Basemat Inside RPV Pedestal | 80206 | OTHR | -2.177 | -1.386 | 0.232 | -4.091 | -3.863 | 0.546 | 0.838 | -1.051 |
| | | TEMP | -1.604 | -2.924 | 0.120 | -8.962 | -9.256 | 0.034 | -0.007 | -0.049 |
| | | HYDR | 1.081 | 0.938 | 0.151 | 4.965 | 4.512 | 0.804 | 0.639 | 0.640 |
| | 80213 | OTHR | -2.274 | -1.211 | 0.075 | -3.377 | -4.445 | -0.092 | -0.071 | -1.360 |
| | | TEMP | -1.721 | -2.346 | 0.088 | -8.685 | -9.343 | -0.166 | -0.026 | -0.164 |
| | | HYDR | 0.989 | 0.860 | 0.085 | 4.109 | 5.137 | 0.558 | 0.450 | 0.810 |
| | 80224 | OTHR | -2.756 | -1.657 | 0.054 | -4.130 | -3.404 | -0.146 | -1.026 | -0.139 |
| | | TEMP | -1.574 | -2.175 | 0.061 | -8.644 | -8.932 | -0.052 | -0.105 | 0.019 |
| | | HYDR | 0.883 | 0.637 | 0.082 | 4.962 | 3.893 | 0.423 | 0.799 | 0.352 |

## Table 3G.1-24 Combined Forces and Moments: RCCV, Selected Load Combination CV-7b (Continued)

| Location | Element ID | | Nx (MN/m) | Ny (MN/m) | Nxy (MN/m) | Mx (MNm/m) | My (MNm/m) | Mxy (MNm/m) | Qx (MN/m) | Qy (MN/m) |
|---|---|---|---|---|---|---|---|---|---|---|
| 12 S/P Slab @ RPV | 83306 | OTHR | 0.066 | 1.476 | -0.440 | -0.755 | 0.507 | -0.071 | 2.241 | -0.042 |
| | | TEMP | -11.672 | 3.835 | 0.218 | -9.639 | -8.194 | 0.035 | -0.073 | -0.040 |
| | | HYDR | 1.298 | 0.806 | 0.476 | 1.029 | 0.690 | 0.081 | 2.027 | 0.049 |
| | 83313 | OTHR | 0.261 | 1.206 | -0.082 | -0.687 | 0.522 | 0.042 | 2.256 | 0.058 |
| | | TEMP | -11.910 | 4.316 | -0.426 | -9.668 | -8.271 | -0.025 | -0.075 | 0.011 |
| | | HYDR | 1.213 | 0.820 | 0.328 | 1.005 | 0.623 | 0.139 | 1.996 | 0.041 |
| | 83324 | OTHR | 0.293 | 1.710 | 0.048 | -0.791 | 0.470 | -0.037 | 2.200 | -0.062 |
| | | TEMP | -11.696 | 4.693 | 0.966 | -9.530 | -8.130 | -0.002 | 0.004 | 0.007 |
| | | HYDR | 1.256 | 0.871 | 0.342 | 0.951 | 0.560 | 0.098 | 1.945 | 0.048 |
| 13 S/P Slab @ Center | 83406 | OTHR | 0.383 | 1.111 | -0.320 | -3.467 | -0.976 | -0.036 | -0.269 | 0.003 |
| | | TEMP | -8.140 | -0.574 | -0.507 | -9.101 | -8.502 | 0.000 | -0.107 | 0.016 |
| | | HYDR | 1.234 | 0.820 | 0.265 | 3.030 | 0.974 | 0.060 | 0.303 | 0.004 |
| | 83413 | OTHR | 0.722 | 0.895 | -0.019 | -3.437 | -0.984 | -0.005 | -0.257 | 0.002 |
| | | TEMP | -8.751 | 0.109 | 0.485 | -9.199 | -8.591 | -0.012 | -0.069 | -0.008 |
| | | HYDR | 1.150 | 0.845 | 0.178 | 3.015 | 0.946 | 0.074 | 0.292 | 0.004 |
| | 83424 | OTHR | 0.551 | 1.334 | 0.031 | -3.408 | -0.972 | 0.006 | -0.291 | 0.000 |
| | | TEMP | -8.209 | 0.422 | 0.013 | -9.166 | -8.499 | 0.001 | -0.043 | 0.006 |
| | | HYDR | 1.203 | 0.917 | 0.178 | 2.995 | 0.931 | 0.063 | 0.287 | 0.004 |
| 14 S/P Slab @ RCCV | 83506 | OTHR | 0.535 | 0.930 | -0.240 | 1.912 | -0.230 | -0.028 | -2.228 | -0.002 |
| | | TEMP | -6.270 | -2.431 | -0.382 | -8.852 | -8.637 | -0.050 | -0.135 | 0.021 |
| | | HYDR | 1.115 | 0.816 | 0.196 | 1.745 | 0.260 | 0.020 | 1.878 | 0.011 |
| | 83513 | OTHR | 0.917 | 0.823 | 0.002 | 1.894 | -0.239 | -0.005 | -2.217 | 0.002 |
| | | TEMP | -7.033 | -2.078 | 0.612 | -9.208 | -8.687 | -0.011 | -0.022 | 0.001 |
| | | HYDR | 1.042 | 0.850 | 0.169 | 1.702 | 0.249 | 0.023 | 1.873 | 0.009 |
| | 83524 | OTHR | 0.640 | 1.206 | 0.030 | 2.024 | -0.179 | 0.000 | -2.248 | 0.002 |
| | | TEMP | -6.237 | -1.445 | -0.080 | -9.171 | -8.643 | 0.017 | -0.039 | -0.005 |
| | | HYDR | 1.097 | 0.937 | 0.164 | 1.708 | 0.232 | 0.020 | 1.870 | 0.009 |
| 15 Topslab @ Drywell Head Opening | 98120 | OTHR | See Tables 3G.5-13 to 3G.5-16 | | | | | | | |
| | | TEMP | | | | | | | | |
| | | HYDR | | | | | | | | |
| | 98135 | OTHR | | | | | | | | |
| | | TEMP | | | | | | | | |
| | | HYDR | | | | | | | | |
| | 98104 | OTHR | | | | | | | | |
| | | TEMP | | | | | | | | |
| | | HYDR | | | | | | | | |
| 16 Topslab @ Center | 98149 | OTHR | | | | | | | | |
| | | TEMP | | | | | | | | |
| | | HYDR | | | | | | | | |
| | 98170 | OTHR | | | | | | | | |
| | | TEMP | | | | | | | | |
| | | HYDR | | | | | | | | |
| | 98109 | OTHR | | | | | | | | |
| | | TEMP | | | | | | | | |
| | | HYDR | | | | | | | | |
| 17 Topslab @ RCCV | 98174 | OTHR | | | | | | | | |
| | | TEMP | | | | | | | | |
| | | HYDR | | | | | | | | |
| | 98197 | OTHR | | | | | | | | |
| | | TEMP | | | | | | | | |
| | | HYDR | | | | | | | | |
| | 98103 | OTHR | | | | | | | | |
| | | TEMP | | | | | | | | |
| | | HYDR | | | | | | | | |

*OTHR: Loads other than thermal and hydrodyanamic loads*
*TEMP: Thermal loads*
*HYDR: Hydrodyanmic loads*
*S/P: Suppression Pool*
*SI to U.S. Customary units conversion (SI units are the controlling units and U.S. Customary units are for reference only):*
*1 MN/m = $6.852 \times 10^4$ lbf/ft*
*1 MNm/m = $2.248 \times 10^5$ lbf-ft/ft*

## Table 3G.1-25 Combined Forces and Moments: RCCV, Selected Load Combination CV-11a

| Location | Element ID | | Nx (MN/m) | Ny (MN/m) | Nxy (MN/m) | Mx (MNm/m) | My (MNm/m) | Mxy (MNm/m) | Qx (MN/m) | Qy (MN/m) |
|---|---|---|---|---|---|---|---|---|---|---|
| 1 RPV Pedestal Bottom | 5006 | OTHR | -1.739 | -7.073 | -0.039 | 0.226 | 1.305 | 0.029 | -0.010 | 0.873 |
| | | TEMP | -3.476 | 1.649 | -0.329 | -6.696 | -6.462 | -0.046 | 0.105 | 1.012 |
| | | SEIS | 5.298 | 9.209 | 2.533 | 1.297 | 7.221 | 0.131 | 0.298 | 3.152 |
| | | HYDR | 1.333 | 3.785 | 0.094 | 0.270 | 1.646 | 0.012 | 0.017 | 0.770 |
| | 5013 | OTHR | -2.253 | -7.531 | 0.061 | 0.168 | 1.513 | -0.002 | -0.005 | 1.054 |
| | | TEMP | -3.121 | 1.796 | -0.097 | -6.854 | -6.851 | -0.006 | 0.027 | 0.925 |
| | | SEIS | 5.606 | 13.008 | 1.616 | 1.531 | 7.718 | 0.056 | 0.200 | 3.420 |
| | | HYDR | 1.490 | 3.953 | 0.386 | 0.302 | 1.787 | 0.001 | 0.012 | 0.866 |
| | 5024 | OTHR | -2.104 | -7.043 | 0.044 | 0.331 | 1.307 | -0.006 | 0.008 | 0.881 |
| | | TEMP | -3.419 | 1.892 | -0.003 | -6.894 | -6.129 | -0.026 | -0.036 | 1.045 |
| | | SEIS | 3.003 | 8.339 | 3.354 | 0.757 | 3.064 | 0.027 | 0.299 | 1.464 |
| | | HYDR | 1.625 | 3.854 | 0.189 | 0.309 | 1.745 | 0.009 | 0.017 | 0.851 |
| 2 RPV Pedestal Mid-Height | 6006 | OTHR | 0.768 | -6.822 | 0.049 | -0.032 | -0.131 | 0.024 | 0.069 | -0.291 |
| | | TEMP | 0.080 | 1.775 | 0.154 | -6.175 | -4.043 | 0.264 | 0.065 | -1.515 |
| | | SEIS | 1.153 | 5.223 | 3.261 | 0.172 | 0.218 | 0.255 | 0.316 | 0.176 |
| | | HYDR | 0.321 | 4.221 | 0.218 | 0.039 | 0.284 | 0.023 | 0.033 | 0.059 |
| | 6013 | OTHR | 0.495 | -6.830 | 0.201 | -0.185 | -0.186 | 0.005 | -0.003 | -0.272 |
| | | TEMP | -0.061 | 1.444 | -0.177 | -6.419 | -3.904 | -0.057 | -0.026 | -1.669 |
| | | SEIS | 1.465 | 6.708 | 1.722 | 1.080 | 0.528 | 0.087 | 0.093 | 0.445 |
| | | HYDR | 0.331 | 3.890 | 0.369 | 0.074 | 0.270 | 0.008 | 0.011 | 0.057 |
| | 6024 | OTHR | 0.774 | -5.100 | -0.477 | 0.284 | 0.121 | 0.016 | -0.003 | -0.239 |
| | | TEMP | -0.245 | 2.050 | 0.059 | -7.408 | -2.297 | -0.304 | -0.003 | -1.547 |
| | | SEIS | 1.020 | 4.482 | 5.110 | 0.945 | 0.580 | 0.341 | 0.213 | 0.438 |
| | | HYDR | 0.328 | 3.114 | 0.438 | 0.055 | 0.261 | 0.019 | 0.019 | 0.021 |
| 3 RPV Pedestal Top | 6606 | OTHR | 0.317 | -5.541 | 0.773 | 0.371 | 2.423 | 0.054 | 0.185 | -0.946 |
| | | TEMP | 20.997 | 2.192 | 0.564 | -6.643 | -5.510 | -0.035 | -1.941 | 0.870 |
| | | SEIS | 1.720 | 3.276 | 2.761 | 0.619 | 4.163 | 0.652 | 1.283 | 1.596 |
| | | HYDR | 0.601 | 3.767 | 0.658 | 0.515 | 3.067 | 0.157 | 0.498 | 0.865 |
| | 6613 | OTHR | 0.040 | -5.703 | -0.076 | 0.239 | 2.425 | -0.120 | -0.054 | -0.987 |
| | | TEMP | 21.088 | 1.964 | -0.425 | -6.702 | -5.546 | 0.139 | 2.063 | 0.862 |
| | | SEIS | 2.522 | 4.072 | 1.265 | 1.131 | 3.943 | 0.418 | 0.353 | 1.478 |
| | | HYDR | 0.579 | 3.509 | 0.305 | 0.452 | 2.863 | 0.129 | 0.324 | 0.851 |
| | 6624 | OTHR | 0.551 | -5.428 | 0.318 | 0.348 | 2.127 | 0.158 | 0.025 | -0.763 |
| | | TEMP | 21.900 | 2.601 | 0.228 | -6.671 | -5.665 | 0.005 | -2.338 | 1.055 |
| | | SEIS | 1.715 | 4.318 | 3.393 | 0.669 | 2.541 | 0.293 | 0.367 | 0.909 |
| | | HYDR | 0.534 | 3.632 | 0.319 | 0.447 | 2.797 | 0.153 | 0.426 | 0.817 |
| 4 RCCV Wetwell Bottom | 1806 | OTHR | -0.013 | -2.852 | 0.003 | 0.243 | 1.445 | 0.017 | 0.010 | 0.537 |
| | | TEMP | 2.533 | 0.468 | -0.194 | -4.438 | -8.138 | 0.077 | 0.083 | -1.750 |
| | | SEIS | 2.166 | 7.214 | 6.356 | 0.406 | 2.376 | 0.128 | 0.034 | 0.884 |
| | | HYDR | 0.703 | 0.817 | 0.455 | 0.397 | 2.392 | 0.010 | 0.005 | 0.996 |
| | 1813 | OTHR | -0.195 | -3.126 | 0.204 | 0.238 | 1.563 | 0.000 | -0.002 | 0.637 |
| | | TEMP | 1.866 | -2.167 | -0.420 | -4.274 | -7.773 | -0.025 | -0.007 | -1.523 |
| | | SEIS | 1.533 | 8.760 | 4.947 | 0.356 | 1.941 | 0.055 | 0.025 | 0.802 |
| | | HYDR | 0.673 | 0.829 | 0.413 | 0.399 | 2.377 | 0.008 | 0.004 | 1.013 |
| | 1824 | OTHR | 0.197 | -3.163 | -0.002 | 0.240 | 1.375 | 0.008 | -0.006 | 0.576 |
| | | TEMP | 2.926 | -2.481 | 0.046 | -4.432 | -8.134 | 0.020 | -0.085 | -1.667 |
| | | SEIS | 1.165 | 7.835 | 7.408 | 0.148 | 0.664 | 0.093 | 0.062 | 0.312 |
| | | HYDR | 0.756 | 0.570 | 0.387 | 0.403 | 2.421 | 0.009 | 0.007 | 1.029 |

## Table 3G.1-25 Combined Forces and Moments: RCCV, Selected Load Combination CV-11a (Continued)

| Location | Element ID | | Nx (MN/m) | Ny (MN/m) | Nxy (MN/m) | Mx (MNm/m) | My (MNm/m) | Mxy (MNm/m) | Qx (MN/m) | Qy (MN/m) |
|---|---|---|---|---|---|---|---|---|---|---|
| 5 RCCV Wetwell Mid-Height | 2606 | OTHR | 1.740 | -2.393 | -0.035 | -0.115 | -0.451 | -0.003 | 0.007 | -0.055 |
| | | TEMP | 1.379 | 0.586 | -0.171 | -3.308 | -1.033 | 0.018 | 0.039 | 0.074 |
| | | SEIS | 0.502 | 5.610 | 5.947 | 0.084 | 0.164 | 0.156 | 0.022 | 0.244 |
| | | HYDR | 0.888 | 0.605 | 0.524 | 0.052 | 0.296 | 0.023 | 0.004 | 0.184 |
| | 2613 | OTHR | 1.488 | -2.852 | 0.189 | -0.141 | -0.486 | 0.001 | -0.006 | 0.001 |
| | | TEMP | 0.111 | -2.544 | -0.109 | -3.090 | -1.052 | 0.009 | -0.075 | 0.370 |
| | | SEIS | 1.143 | 7.169 | 4.887 | 0.113 | 0.220 | 0.058 | 0.033 | 0.318 |
| | | HYDR | 0.859 | 0.630 | 0.432 | 0.044 | 0.234 | 0.021 | 0.010 | 0.149 |
| | 2624 | OTHR | 1.755 | -2.660 | -0.009 | -0.084 | -0.486 | -0.002 | 0.003 | -0.072 |
| | | TEMP | 0.965 | -2.909 | -0.087 | -3.293 | -0.935 | -0.026 | 0.067 | 0.189 |
| | | SEIS | 0.510 | 6.406 | 6.772 | 0.114 | 0.220 | 0.117 | 0.041 | 0.125 |
| | | HYDR | 0.999 | 0.525 | 0.348 | 0.067 | 0.237 | 0.006 | 0.006 | 0.142 |
| 6 RCCV Wetwell Top | 3406 | OTHR | 1.687 | -1.737 | 0.162 | -0.057 | -0.186 | 0.078 | -0.040 | -0.007 |
| | | TEMP | 11.723 | 1.461 | 0.327 | -4.151 | -8.468 | -0.227 | 0.461 | 3.349 |
| | | SEIS | 0.518 | 4.183 | 5.523 | 0.142 | 0.667 | 0.242 | 0.209 | 0.277 |
| | | HYDR | 0.630 | 0.484 | 0.561 | 0.095 | 0.369 | 0.133 | 0.156 | 0.196 |
| | 3413 | OTHR | 1.464 | -2.661 | 0.120 | -0.087 | -0.257 | -0.109 | 0.054 | 0.035 |
| | | TEMP | 8.032 | -3.439 | 0.044 | -4.382 | -9.151 | -0.402 | 0.538 | 3.335 |
| | | SEIS | 0.905 | 6.033 | 4.629 | 0.088 | 0.536 | 0.122 | 0.146 | 0.314 |
| | | HYDR | 0.491 | 0.532 | 0.354 | 0.050 | 0.255 | 0.066 | 0.069 | 0.166 |
| | 3424 | OTHR | 1.475 | -2.009 | 0.057 | -0.003 | -0.071 | 0.071 | -0.025 | 0.009 |
| | | TEMP | 10.292 | -4.166 | 0.471 | -3.681 | -5.045 | -0.039 | -0.006 | 2.165 |
| | | SEIS | 0.839 | 5.113 | 5.841 | 0.088 | 0.555 | 0.086 | 0.080 | 0.201 |
| | | HYDR | 0.520 | 0.441 | 0.274 | 0.022 | 0.234 | 0.037 | 0.056 | 0.151 |
| 7 RCCV Drywell Bottom | 3606 | OTHR | 1.702 | -1.154 | 0.087 | -0.008 | 0.140 | 0.098 | -0.002 | 0.405 |
| | | TEMP | 8.504 | 1.377 | 0.674 | -5.342 | -9.036 | 0.607 | 0.534 | -1.980 |
| | | SEIS | 0.521 | 3.896 | 5.237 | 0.122 | 0.893 | 0.084 | 0.199 | 0.401 |
| | | HYDR | 0.652 | 0.500 | 0.361 | 0.085 | 0.342 | 0.038 | 0.149 | 0.126 |
| | 3613 | OTHR | 1.521 | -2.148 | 0.178 | 0.031 | 0.432 | -0.099 | -0.001 | 0.598 |
| | | TEMP | 4.607 | -4.161 | 1.005 | -4.955 | -6.227 | -0.363 | 0.317 | -0.820 |
| | | SEIS | 0.899 | 5.982 | 4.243 | 0.190 | 0.965 | 0.056 | 0.130 | 0.387 |
| | | HYDR | 0.450 | 0.433 | 0.143 | 0.075 | 0.341 | 0.080 | 0.072 | 0.114 |
| | 3624 | OTHR | 1.471 | -1.651 | 0.069 | 0.113 | 0.570 | 0.072 | 0.010 | 0.464 |
| | | TEMP | -4.291 | -6.043 | 0.252 | -0.934 | -2.498 | 0.068 | 0.000 | 0.351 |
| | | SEIS | 0.793 | 5.306 | 5.607 | 0.084 | 0.306 | 0.094 | 0.049 | 0.088 |
| | | HYDR | 0.411 | 0.284 | 0.291 | 0.071 | 0.323 | 0.027 | 0.050 | 0.094 |
| 8 RCCV Drywell Mid-Height | 4006 | OTHR | 1.279 | -0.713 | 0.104 | -0.103 | -0.292 | 0.009 | 0.029 | -0.141 |
| | | TEMP | 5.952 | 2.178 | 0.212 | -5.110 | -5.057 | 0.011 | -0.126 | -0.683 |
| | | SEIS | 1.651 | 2.975 | 4.729 | 0.173 | 0.663 | 0.135 | 0.082 | 0.363 |
| | | HYDR | 0.646 | 0.410 | 0.173 | 0.035 | 0.329 | 0.021 | 0.111 | 0.106 |
| | 4013 | OTHR | 1.314 | -2.325 | 0.322 | -0.109 | -0.399 | 0.009 | -0.010 | -0.135 |
| | | TEMP | 4.287 | -5.850 | 1.041 | -4.672 | -4.289 | 0.014 | -0.132 | -0.308 |
| | | SEIS | 1.299 | 5.676 | 4.067 | 0.094 | 0.550 | 0.085 | 0.051 | 0.366 |
| | | HYDR | 0.476 | 0.531 | 0.075 | 0.039 | 0.073 | 0.035 | 0.041 | 0.083 |
| | 4976 | OTHR | 1.166 | -1.144 | 0.040 | 0.033 | -0.050 | 0.000 | -0.012 | -0.230 |
| | | TEMP | -2.660 | -5.335 | 0.580 | -0.954 | -1.780 | 0.003 | 0.013 | -0.584 |
| | | SEIS | 0.611 | 4.233 | 5.826 | 0.102 | 0.277 | 0.040 | 0.041 | 0.078 |
| | | HYDR | 0.193 | 0.232 | 0.209 | 0.030 | 0.031 | 0.013 | 0.005 | 0.069 |

## Table 3G.1-25 Combined Forces and Moments: RCCV, Selected Load Combination CV-11a (Continued)

| Location | Element ID | | Nx (MN/m) | Ny (MN/m) | Nxy (MN/m) | Mx (MNm/m) | My (MNm/m) | Mxy (MNm/m) | Qx (MN/m) | Qy (MN/m) |
|---|---|---|---|---|---|---|---|---|---|---|
| 9 RCCV Drywell Top | 4406 | OTHR | 0.567 | -0.329 | 0.064 | 0.147 | 0.980 | -0.001 | 0.006 | -0.334 |
| | | TEMP | 6.433 | 1.711 | -0.232 | -4.475 | -3.816 | 0.299 | 0.087 | -0.150 |
| | | SEIS | 1.923 | 2.201 | 3.826 | 0.374 | 2.035 | 0.074 | 0.087 | 0.482 |
| | | HYDR | 0.203 | 0.252 | 0.046 | 0.073 | 0.300 | 0.056 | 0.059 | 0.229 |
| | 4413 | OTHR | -0.100 | -2.509 | 0.217 | 0.124 | 1.189 | 0.036 | 0.003 | -0.485 |
| | | TEMP | 0.711 | -6.632 | -0.292 | -4.753 | -4.467 | 0.253 | -0.243 | 0.643 |
| | | SEIS | 1.311 | 5.546 | 3.537 | 0.199 | 1.434 | 0.163 | 0.053 | 0.196 |
| | | HYDR | 0.516 | 0.629 | 0.230 | 0.226 | 0.253 | 0.171 | 0.080 | 0.264 |
| | 4424 | OTHR | 0.898 | -0.765 | 0.018 | 0.294 | 1.510 | 0.019 | 0.003 | -0.477 |
| | | TEMP | -5.846 | -4.171 | 0.767 | -0.363 | 1.129 | -0.024 | -0.022 | -1.462 |
| | | SEIS | 1.049 | 3.271 | 6.202 | 0.107 | 0.570 | 0.029 | 0.044 | 0.067 |
| | | HYDR | 0.123 | 0.187 | 0.147 | 0.037 | 0.220 | 0.003 | 0.005 | 0.090 |
| 10 Basemat @ Center | 80003 | OTHR | -3.169 | -1.933 | 0.152 | 1.321 | 1.823 | -0.049 | 0.204 | -0.143 |
| | | TEMP | -4.270 | -5.140 | 0.021 | -8.130 | -8.102 | -0.039 | 0.029 | -0.008 |
| | | SEIS | 3.276 | 2.673 | 1.515 | 11.475 | 10.858 | 0.559 | 0.608 | 0.927 |
| | | HYDR | 0.908 | 0.831 | 0.076 | 3.250 | 2.955 | 0.047 | 0.202 | 0.192 |
| | 80007 | OTHR | -3.198 | -1.942 | 0.136 | 1.392 | 1.844 | -0.032 | -0.005 | -0.233 |
| | | TEMP | -4.296 | -5.104 | 0.056 | -8.096 | -8.099 | -0.037 | 0.028 | -0.009 |
| | | SEIS | 3.366 | 2.850 | 0.987 | 11.022 | 10.741 | 0.435 | 0.677 | 0.928 |
| | | HYDR | 0.906 | 0.817 | 0.065 | 3.190 | 2.945 | 0.049 | 0.168 | 0.228 |
| | 80012 | OTHR | -3.249 | -1.932 | 0.137 | 1.399 | 1.846 | -0.035 | -0.207 | -0.025 |
| | | TEMP | -4.302 | -5.040 | 0.042 | -8.079 | -8.109 | -0.032 | 0.024 | -0.001 |
| | | SEIS | 3.012 | 3.152 | 0.799 | 10.595 | 10.490 | 0.184 | 0.814 | 0.902 |
| | | HYDR | 0.885 | 0.797 | 0.050 | 3.157 | 2.919 | 0.041 | 0.254 | 0.145 |
| 11 Basemat Inside RPV Pedestal | 80206 | OTHR | -2.849 | -2.069 | 0.228 | -1.074 | -0.876 | 0.850 | 1.075 | -1.224 |
| | | TEMP | -4.260 | -5.523 | 0.137 | -8.575 | -8.460 | 0.003 | 0.005 | -0.035 |
| | | SEIS | 4.254 | 1.786 | 3.108 | 12.614 | 11.117 | 2.433 | 1.559 | 2.036 |
| | | HYDR | 1.044 | 0.895 | 0.149 | 4.683 | 4.269 | 0.707 | 0.579 | 0.597 |
| | 80213 | OTHR | -2.956 | -1.942 | 0.099 | -0.034 | -1.811 | -0.130 | -0.087 | -1.672 |
| | | TEMP | -4.445 | -5.127 | 0.161 | -8.289 | -8.565 | -0.151 | -0.018 | -0.103 |
| | | SEIS | 4.499 | 2.923 | 2.205 | 10.423 | 10.734 | 1.423 | 0.876 | 2.876 |
| | | HYDR | 0.965 | 0.838 | 0.086 | 3.929 | 4.879 | 0.437 | 0.351 | 0.777 |
| | 80224 | OTHR | -3.438 | -2.320 | 0.065 | -1.439 | -0.174 | -0.175 | -1.384 | -0.146 |
| | | TEMP | -4.372 | -4.948 | 0.081 | -8.177 | -8.193 | -0.045 | -0.038 | 0.010 |
| | | SEIS | 2.767 | 4.528 | 1.898 | 4.469 | 6.816 | 1.090 | 2.449 | 0.531 |
| | | HYDR | 0.869 | 0.635 | 0.079 | 4.696 | 3.714 | 0.336 | 0.750 | 0.279 |

## Table 3G.1-25 Combined Forces and Moments: RCCV, Selected Load Combination CV-11a (Continued)

| Location | Element ID | | Nx (MN/m) | Ny (MN/m) | Nxy (MN/m) | Mx (MNm/m) | My (MNm/m) | Mxy (MNm/m) | Qx (MN/m) | Qy (MN/m) |
|---|---|---|---|---|---|---|---|---|---|---|
| 12 S/P Slab @ RPV | 83306 | OTHR | -0.087 | 0.882 | -0.395 | 0.188 | 0.683 | -0.060 | 1.582 | -0.032 |
| | | TEMP | -10.607 | 10.981 | 0.454 | -4.700 | -2.770 | 0.032 | -0.288 | 0.000 |
| | | SEIS | 0.618 | 1.006 | 1.743 | 3.681 | 2.185 | 0.480 | 1.583 | 0.243 |
| | | HYDR | 1.136 | 0.794 | 0.394 | 0.982 | 0.646 | 0.066 | 2.051 | 0.046 |
| | 83313 | OTHR | 0.109 | 0.649 | -0.099 | 0.238 | 0.696 | 0.040 | 1.593 | 0.044 |
| | | TEMP | -10.822 | 11.242 | -0.850 | -4.737 | -2.848 | -0.039 | -0.302 | -0.028 |
| | | SEIS | 1.085 | 1.488 | 0.797 | 3.219 | 1.952 | 0.433 | 1.463 | 0.182 |
| | | HYDR | 1.082 | 0.810 | 0.252 | 0.956 | 0.588 | 0.111 | 2.021 | 0.039 |
| | 83324 | OTHR | 0.144 | 1.107 | 0.054 | 0.151 | 0.649 | -0.038 | 1.543 | -0.048 |
| | | TEMP | -10.702 | 11.862 | 1.279 | -4.487 | -2.654 | 0.006 | -0.156 | 0.046 |
| | | SEIS | 0.668 | 0.426 | 1.509 | 1.956 | 1.375 | 0.521 | 1.095 | 0.258 |
| | | HYDR | 1.121 | 0.856 | 0.266 | 0.907 | 0.523 | 0.078 | 1.968 | 0.045 |
| 13 S/P Slab @ Center | 83406 | OTHR | 0.098 | 0.642 | -0.303 | -2.185 | -0.369 | -0.025 | -0.005 | 0.003 |
| | | TEMP | -6.490 | 4.881 | -0.530 | -3.815 | -3.181 | -0.001 | -0.306 | 0.016 |
| | | SEIS | 0.498 | 1.242 | 1.400 | 1.035 | 1.101 | 0.361 | 0.933 | 0.026 |
| | | HYDR | 1.106 | 0.797 | 0.225 | 3.093 | 0.966 | 0.049 | 0.290 | 0.003 |
| | 83413 | OTHR | 0.409 | 0.441 | -0.018 | -2.160 | -0.375 | -0.004 | 0.004 | 0.002 |
| | | TEMP | -6.986 | 5.307 | 0.315 | -3.900 | -3.257 | -0.015 | -0.278 | -0.011 |
| | | SEIS | 1.126 | 1.180 | 0.726 | 1.014 | 0.969 | 0.298 | 0.828 | 0.011 |
| | | HYDR | 1.054 | 0.819 | 0.140 | 3.078 | 0.943 | 0.058 | 0.281 | 0.003 |
| | 83424 | OTHR | 0.268 | 0.850 | 0.025 | -2.126 | -0.371 | 0.004 | -0.025 | 0.000 |
| | | TEMP | -6.630 | 5.823 | 0.078 | -3.895 | -3.148 | -0.003 | -0.210 | 0.009 |
| | | SEIS | 0.934 | 0.394 | 0.771 | 0.910 | 0.679 | 0.362 | 0.502 | 0.007 |
| | | HYDR | 1.100 | 0.884 | 0.137 | 3.056 | 0.928 | 0.049 | 0.276 | 0.003 |
| 14 S/P Slab @ RCCV | 83506 | OTHR | 0.208 | 0.513 | -0.237 | 0.656 | -0.124 | -0.024 | -1.237 | 0.001 |
| | | TEMP | -3.948 | 2.320 | -0.446 | -2.906 | -3.131 | -0.038 | -0.275 | 0.016 |
| | | SEIS | 0.268 | 1.370 | 1.119 | 3.124 | 0.231 | 0.084 | 0.620 | 0.086 |
| | | HYDR | 1.024 | 0.791 | 0.166 | 1.721 | 0.267 | 0.017 | 1.913 | 0.010 |
| | 83513 | OTHR | 0.551 | 0.392 | 0.005 | 0.639 | -0.130 | -0.005 | -1.227 | 0.002 |
| | | TEMP | -4.567 | 2.419 | 0.440 | -3.190 | -3.174 | -0.008 | -0.192 | -0.001 |
| | | SEIS | 1.033 | 0.985 | 0.696 | 2.796 | 0.328 | 0.054 | 0.526 | 0.056 |
| | | HYDR | 0.978 | 0.820 | 0.137 | 1.684 | 0.258 | 0.017 | 1.909 | 0.008 |
| | 83524 | OTHR | 0.312 | 0.763 | 0.028 | 0.763 | -0.083 | -0.001 | -1.255 | 0.001 |
| | | TEMP | -4.038 | 3.201 | -0.017 | -3.278 | -3.153 | 0.013 | -0.168 | -0.005 |
| | | SEIS | 0.967 | 0.450 | 0.436 | 1.590 | 0.290 | 0.012 | 0.102 | 0.092 |
| | | HYDR | 1.028 | 0.899 | 0.128 | 1.687 | 0.241 | 0.015 | 1.906 | 0.007 |

## Table 3G.1-25 Combined Forces and Moments: RCCV, Selected Load Combination CV-11a (Continued)

| Location | Element ID | | Nx (MN/m) | Ny (MN/m) | Nxy (MN/m) | Mx (MNm/m) | My (MNm/m) | Mxy (MNm/m) | Qx (MN/m) | Qy (MN/m) |
|---|---|---|---|---|---|---|---|---|---|---|
| 15 Topslab @ Drywell Head Opening | 98120 | OTHR | 0.425 | 0.777 | 0.966 | 0.548 | 0.449 | 0.201 | 0.310 | -0.492 |
| | | TEMP | -7.068 | -4.258 | -0.770 | 0.956 | 0.732 | 2.765 | -0.161 | -0.002 |
| | | SEIS | 1.555 | 0.940 | 0.893 | 0.425 | 0.527 | 0.317 | 0.136 | 0.305 |
| | | HYDR | 0.234 | 0.076 | 0.098 | 0.050 | 0.072 | 0.037 | 0.009 | 0.019 |
| | 98135 | OTHR | 0.313 | -0.231 | -0.417 | 0.361 | -0.070 | 0.154 | 0.101 | -0.768 |
| | | TEMP | -8.729 | -5.283 | 0.235 | 3.147 | -2.057 | -1.132 | 0.380 | -0.267 |
| | | SEIS | 2.718 | 0.341 | 0.531 | 0.717 | 0.333 | 0.139 | 0.083 | 0.353 |
| | | HYDR | 0.372 | 0.053 | 0.077 | 0.068 | 0.020 | 0.017 | 0.005 | 0.008 |
| | 98104 | OTHR | -0.151 | 1.909 | -0.582 | 0.522 | 1.506 | -0.133 | -0.345 | -0.436 |
| | | TEMP | -4.999 | -1.752 | 0.585 | -1.461 | 3.712 | -1.500 | 0.185 | -0.214 |
| | | SEIS | 0.357 | 1.849 | 0.540 | 0.213 | 1.418 | 0.271 | 0.062 | 0.441 |
| | | HYDR | 0.068 | 0.287 | 0.110 | 0.021 | 0.123 | 0.027 | 0.005 | 0.044 |
| 16 Topslab @ Center | 98149 | OTHR | 0.478 | 1.057 | -0.192 | 0.060 | 0.040 | 0.233 | 0.034 | 0.121 |
| | | TEMP | -6.075 | -2.540 | -1.137 | 2.229 | 2.310 | 0.496 | 0.037 | 0.048 |
| | | SEIS | 1.936 | 0.665 | 0.775 | 0.778 | 0.442 | 0.176 | 0.091 | 0.291 |
| | | HYDR | 0.345 | 0.181 | 0.037 | 0.047 | 0.036 | 0.026 | 0.016 | 0.020 |
| | 98170 | OTHR | 0.445 | 0.801 | -0.269 | 0.217 | 0.189 | -0.003 | -0.016 | -0.049 |
| | | TEMP | -5.510 | -3.566 | -1.042 | 2.141 | 2.864 | -0.042 | 0.030 | 0.389 |
| | | SEIS | 1.629 | 0.320 | 0.852 | 0.796 | 0.995 | 0.057 | 0.033 | 0.039 |
| | | HYDR | 0.250 | 0.178 | 0.120 | 0.036 | 0.051 | 0.012 | 0.005 | 0.005 |
| | 98109 | OTHR | 0.305 | 1.273 | -0.105 | 0.530 | 1.115 | -0.114 | -0.007 | -0.173 |
| | | TEMP | -6.256 | -0.887 | 0.773 | 1.219 | 2.564 | -0.119 | 0.329 | -0.005 |
| | | SEIS | 0.193 | 1.488 | 0.657 | 0.713 | 0.991 | 0.192 | 0.115 | 0.152 |
| | | HYDR | 0.044 | 0.151 | 0.182 | 0.029 | 0.084 | 0.025 | 0.005 | 0.013 |
| 17 Topslab @ RCCV | 98174 | OTHR | 0.786 | 0.947 | -0.024 | -0.091 | 0.038 | 0.268 | 0.086 | -0.081 |
| | | TEMP | -4.871 | -2.689 | -0.476 | 2.352 | 3.211 | 0.255 | -0.023 | 0.434 |
| | | SEIS | 1.728 | 1.206 | 0.788 | 0.842 | 0.842 | 0.344 | 0.225 | 0.151 |
| | | HYDR | 0.293 | 0.187 | 0.067 | 0.110 | 0.121 | 0.081 | 0.040 | 0.036 |
| | 98197 | OTHR | 0.418 | 1.078 | -0.214 | -0.238 | -0.895 | -0.043 | -0.032 | -0.533 |
| | | TEMP | -7.584 | -2.926 | -1.360 | 1.917 | 3.110 | 0.130 | 0.154 | -0.447 |
| | | SEIS | 1.480 | 0.527 | 0.888 | 0.438 | 1.071 | 0.179 | 0.068 | 0.677 |
| | | HYDR | 0.411 | 0.261 | 0.107 | 0.072 | 0.127 | 0.034 | 0.016 | 0.036 |
| | 98103 | OTHR | 0.444 | 1.355 | -0.049 | -0.180 | 0.381 | -0.179 | -0.389 | -0.123 |
| | | TEMP | -6.577 | -2.458 | -0.070 | 3.431 | 3.308 | 0.118 | 0.450 | 0.084 |
| | | SEIS | 0.296 | 1.626 | 1.181 | 2.170 | 0.708 | 0.293 | 0.947 | 0.120 |
| | | HYDR | 0.058 | 0.171 | 0.217 | 0.090 | 0.080 | 0.014 | 0.023 | 0.002 |

*OTHR: Loads other than thermal, seismic and hydrodynamic loads*
*TEMP: Thermal loads*
*SEIS: Seismic loads*
*HYDR: Hydrodyanmic loads*
*S/P Slab: Suppression Pool Slab*
*SI to U.S. Customary units conversion (SI units are the controlling units and U.S. Customary units are for reference only):*
*1 MN/m = $6.852 \times 10^4$ lbf/ft*
*1 MNm/m = $2.248 \times 10^5$ lbf-ft/ft*

## Table 3G.1-26 Combined Forces and Moments: RCCV, Selected Load Combination CV-11b

| Location | Element ID | | Nx (MN/m) | Ny (MN/m) | Nxy (MN/m) | Mx (MNm/m) | My (MNm/m) | Mxy (MNm/m) | Qx (MN/m) | Qy (MN/m) |
|---|---|---|---|---|---|---|---|---|---|---|
| 1 RPV Pedestal Bottom | 5006 | OTHR | -1.977 | -7.395 | -0.041 | 0.305 | 1.775 | 0.031 | -0.010 | 1.081 |
| | | TEMP | -12.849 | 0.250 | -0.523 | -16.011 | -12.625 | -0.093 | 0.227 | 4.158 |
| | | SEIS | 5.298 | 9.209 | 2.533 | 1.297 | 7.221 | 0.131 | 0.298 | 3.152 |
| | | HYDR | 1.030 | 2.969 | 0.088 | 0.208 | 1.273 | 0.009 | 0.012 | 0.595 |
| | 5013 | OTHR | -2.496 | -7.823 | 0.055 | 0.244 | 1.977 | -0.002 | -0.005 | 1.264 |
| | | TEMP | -12.356 | 0.343 | -0.104 | -16.288 | -13.239 | -0.007 | 0.021 | 4.062 |
| | | SEIS | 5.606 | 13.008 | 1.616 | 1.531 | 7.718 | 0.056 | 0.200 | 3.420 |
| | | HYDR | 1.150 | 3.029 | 0.369 | 0.232 | 1.379 | 0.001 | 0.009 | 0.668 |
| | 5024 | OTHR | -2.341 | -7.281 | 0.048 | 0.412 | 1.748 | -0.008 | 0.009 | 1.074 |
| | | TEMP | -12.862 | 0.231 | 0.003 | -16.285 | -11.829 | -0.073 | -0.054 | 4.265 |
| | | SEIS | 3.003 | 8.339 | 3.354 | 0.757 | 3.064 | 0.027 | 0.299 | 1.464 |
| | | HYDR | 1.260 | 2.975 | 0.188 | 0.241 | 1.360 | 0.007 | 0.012 | 0.662 |
| 2 RPV Pedestal Mid-Height | 6006 | OTHR | 0.982 | -7.139 | 0.028 | -0.042 | -0.174 | 0.024 | 0.072 | -0.321 |
| | | TEMP | -2.408 | 0.615 | 0.443 | -16.093 | -14.923 | 0.436 | 0.146 | -1.774 |
| | | SEIS | 1.153 | 5.223 | 3.261 | 0.172 | 0.218 | 0.255 | 0.316 | 0.176 |
| | | HYDR | 0.266 | 3.408 | 0.166 | 0.030 | 0.241 | 0.019 | 0.027 | 0.044 |
| | 6013 | OTHR | 0.702 | -7.124 | 0.195 | -0.196 | -0.231 | 0.004 | -0.003 | -0.303 |
| | | TEMP | -2.624 | 0.212 | -0.206 | -16.582 | -14.795 | -0.048 | -0.033 | -2.015 |
| | | SEIS | 1.465 | 6.708 | 1.722 | 1.080 | 0.528 | 0.087 | 0.093 | 0.445 |
| | | HYDR | 0.259 | 3.036 | 0.351 | 0.057 | 0.219 | 0.006 | 0.009 | 0.045 |
| | 6024 | OTHR | 1.014 | -5.279 | -0.497 | 0.289 | 0.093 | 0.016 | -0.006 | -0.253 |
| | | TEMP | -2.728 | 0.667 | 0.076 | -18.533 | -11.361 | -0.661 | 0.020 | -1.697 |
| | | SEIS | 1.020 | 4.482 | 5.110 | 0.945 | 0.580 | 0.341 | 0.213 | 0.438 |
| | | HYDR | 0.261 | 2.491 | 0.369 | 0.041 | 0.212 | 0.016 | 0.014 | 0.019 |
| 3 RPV Pedestal Top | 6606 | OTHR | 0.458 | -5.898 | 0.784 | 0.408 | 2.659 | 0.045 | 0.211 | -0.980 |
| | | TEMP | 8.837 | 0.682 | 0.577 | -16.163 | -12.297 | 0.057 | -1.395 | -2.012 |
| | | SEIS | 1.720 | 3.276 | 2.761 | 0.619 | 4.163 | 0.652 | 1.283 | 1.596 |
| | | HYDR | 0.552 | 2.994 | 0.564 | 0.428 | 2.438 | 0.156 | 0.487 | 0.661 |
| | 6613 | OTHR | 0.163 | -6.069 | -0.087 | 0.272 | 2.672 | -0.113 | -0.075 | -1.027 |
| | | TEMP | 9.213 | 0.732 | -0.359 | -16.199 | -12.536 | 0.030 | 1.518 | -1.952 |
| | | SEIS | 2.522 | 4.072 | 1.265 | 1.131 | 3.943 | 0.418 | 0.353 | 1.478 |
| | | HYDR | 0.519 | 2.708 | 0.314 | 0.367 | 2.223 | 0.114 | 0.313 | 0.649 |
| | 6624 | OTHR | 0.692 | -5.753 | 0.318 | 0.385 | 2.353 | 0.151 | 0.046 | -0.794 |
| | | TEMP | 9.545 | 0.848 | 0.253 | -16.174 | -12.377 | 0.066 | -1.768 | -1.800 |
| | | SEIS | 1.715 | 4.318 | 3.393 | 0.669 | 2.541 | 0.293 | 0.367 | 0.909 |
| | | HYDR | 0.491 | 2.860 | 0.273 | 0.368 | 2.206 | 0.145 | 0.411 | 0.629 |
| 4 RCCV Wetwell Bottom | 1806 | OTHR | 0.168 | -2.355 | -0.027 | 0.317 | 1.889 | 0.018 | 0.011 | 0.683 |
| | | TEMP | -1.533 | -1.021 | -0.228 | -10.248 | -14.646 | 0.090 | 0.096 | -1.555 |
| | | SEIS | 2.166 | 7.214 | 6.356 | 0.406 | 2.376 | 0.128 | 0.034 | 0.884 |
| | | HYDR | 0.574 | 0.582 | 0.330 | 0.296 | 1.771 | 0.007 | 0.004 | 0.746 |
| | 1813 | OTHR | -0.022 | -2.699 | 0.200 | 0.311 | 2.009 | -0.001 | -0.003 | 0.789 |
| | | TEMP | -2.037 | -4.249 | -0.394 | -10.039 | -14.121 | -0.043 | -0.006 | -1.254 |
| | | SEIS | 1.533 | 8.760 | 4.947 | 0.356 | 1.941 | 0.055 | 0.025 | 0.802 |
| | | HYDR | 0.555 | 0.592 | 0.291 | 0.298 | 1.767 | 0.007 | 0.004 | 0.755 |
| | 1824 | OTHR | 0.393 | -2.658 | 0.001 | 0.311 | 1.806 | 0.008 | -0.005 | 0.723 |
| | | TEMP | -1.011 | -4.103 | 0.136 | -10.224 | -14.384 | 0.028 | -0.105 | -1.321 |
| | | SEIS | 1.165 | 7.835 | 7.408 | 0.148 | 0.664 | 0.093 | 0.062 | 0.312 |
| | | HYDR | 0.623 | 0.400 | 0.281 | 0.305 | 1.826 | 0.008 | 0.007 | 0.778 |

## Table 3G.1-26 Combined Forces and Moments: RCCV, Selected Load Combination CV-11b (Continued)

| Location | Element ID | | Nx (MN/m) | Ny (MN/m) | Nxy (MN/m) | Mx (MNm/m) | My (MNm/m) | Mxy (MNm/m) | Qx (MN/m) | Qy (MN/m) |
|---|---|---|---|---|---|---|---|---|---|---|
| 5 RCCV Wetwell Mid-Height | 2606 | OTHR | 2.256 | -1.892 | -0.073 | -0.146 | -0.581 | -0.003 | 0.008 | -0.051 |
| | | TEMP | -4.269 | -1.249 | -0.234 | -9.962 | -7.559 | 0.001 | 0.044 | 0.117 |
| | | SEIS | 0.502 | 5.610 | 5.947 | 0.084 | 0.164 | 0.156 | 0.022 | 0.244 |
| | | HYDR | 0.693 | 0.434 | 0.372 | 0.042 | 0.234 | 0.016 | 0.002 | 0.144 |
| | 2613 | OTHR | 1.959 | -2.452 | 0.187 | -0.172 | -0.607 | 0.000 | -0.006 | 0.008 |
| | | TEMP | -5.197 | -5.323 | -0.038 | -9.725 | -7.432 | -0.015 | -0.093 | 0.418 |
| | | SEIS | 1.143 | 7.169 | 4.887 | 0.113 | 0.220 | 0.058 | 0.033 | 0.318 |
| | | HYDR | 0.662 | 0.456 | 0.300 | 0.035 | 0.187 | 0.014 | 0.008 | 0.117 |
| | 2624 | OTHR | 2.257 | -2.172 | -0.012 | -0.107 | -0.612 | -0.002 | 0.003 | -0.079 |
| | | TEMP | -4.923 | -4.754 | -0.111 | -10.020 | -7.637 | -0.043 | 0.078 | 0.194 |
| | | SEIS | 0.510 | 6.406 | 6.772 | 0.114 | 0.220 | 0.117 | 0.041 | 0.125 |
| | | HYDR | 0.765 | 0.373 | 0.246 | 0.051 | 0.193 | 0.005 | 0.005 | 0.115 |
| 6 RCCV Wetwell Top | 3406 | OTHR | 2.110 | -1.230 | 0.125 | -0.057 | -0.170 | 0.064 | -0.029 | -0.024 |
| | | TEMP | 5.196 | -0.343 | 0.501 | -10.839 | -14.129 | 0.028 | 0.144 | 2.477 |
| | | SEIS | 0.518 | 4.183 | 5.523 | 0.142 | 0.667 | 0.242 | 0.209 | 0.277 |
| | | HYDR | 0.457 | 0.355 | 0.398 | 0.070 | 0.277 | 0.095 | 0.111 | 0.142 |
| | 3413 | OTHR | 1.828 | -2.277 | 0.131 | -0.092 | -0.220 | -0.093 | 0.046 | 0.011 |
| | | TEMP | 3.430 | -7.154 | 0.362 | -10.781 | -14.124 | -0.109 | 0.133 | 2.640 |
| | | SEIS | 0.905 | 6.033 | 4.629 | 0.088 | 0.536 | 0.122 | 0.146 | 0.314 |
| | | HYDR | 0.351 | 0.394 | 0.249 | 0.037 | 0.189 | 0.049 | 0.050 | 0.117 |
| | 3424 | OTHR | 1.829 | -1.515 | 0.047 | 0.017 | 0.047 | 0.054 | -0.016 | -0.039 |
| | | TEMP | 2.843 | -6.398 | 0.484 | -9.990 | -9.736 | 0.045 | -0.108 | 0.896 |
| | | SEIS | 0.839 | 5.113 | 5.841 | 0.088 | 0.555 | 0.086 | 0.080 | 0.201 |
| | | HYDR | 0.371 | 0.320 | 0.194 | 0.016 | 0.163 | 0.027 | 0.040 | 0.108 |
| 7 RCCV Drywell Bottom | 3606 | OTHR | 2.088 | -0.697 | 0.043 | -0.015 | 0.106 | 0.089 | 0.002 | 0.445 |
| | | TEMP | 0.851 | -0.258 | 0.079 | -12.665 | -14.960 | 0.282 | 0.179 | -0.838 |
| | | SEIS | 0.521 | 3.896 | 5.237 | 0.122 | 0.893 | 0.084 | 0.199 | 0.401 |
| | | HYDR | 0.472 | 0.366 | 0.253 | 0.061 | 0.246 | 0.025 | 0.107 | 0.089 |
| | 3613 | OTHR | 1.858 | -1.813 | 0.204 | 0.012 | 0.394 | -0.080 | -0.001 | 0.650 |
| | | TEMP | -0.941 | -8.499 | 1.390 | -12.337 | -13.241 | -0.243 | 0.024 | -0.345 |
| | | SEIS | 0.899 | 5.982 | 4.243 | 0.190 | 0.965 | 0.056 | 0.130 | 0.387 |
| | | HYDR | 0.324 | 0.321 | 0.101 | 0.054 | 0.250 | 0.057 | 0.052 | 0.082 |
| | 3624 | OTHR | 1.816 | -1.171 | 0.047 | 0.109 | 0.545 | 0.054 | 0.011 | 0.509 |
| | | TEMP | -10.577 | -8.035 | 0.298 | -7.210 | -6.858 | 0.089 | -0.061 | 1.477 |
| | | SEIS | 0.793 | 5.306 | 5.607 | 0.084 | 0.306 | 0.094 | 0.049 | 0.088 |
| | | HYDR | 0.292 | 0.201 | 0.206 | 0.053 | 0.242 | 0.019 | 0.036 | 0.069 |
| 8 RCCV Drywell Mid-Height | 4006 | OTHR | 1.477 | -0.275 | 0.092 | -0.086 | -0.273 | 0.017 | 0.027 | -0.220 |
| | | TEMP | 1.893 | 0.841 | -0.323 | -12.242 | -12.219 | 0.193 | -0.154 | -0.810 |
| | | SEIS | 1.651 | 2.975 | 4.729 | 0.173 | 0.663 | 0.135 | 0.082 | 0.363 |
| | | HYDR | 0.466 | 0.297 | 0.118 | 0.025 | 0.231 | 0.015 | 0.079 | 0.076 |
| | 4013 | OTHR | 1.506 | -2.027 | 0.339 | -0.124 | -0.407 | 0.008 | -0.010 | -0.205 |
| | | TEMP | 1.197 | -10.529 | 1.292 | -12.197 | -11.585 | 0.046 | -0.165 | -0.457 |
| | | SEIS | 1.299 | 5.676 | 4.067 | 0.094 | 0.550 | 0.085 | 0.051 | 0.366 |
| | | HYDR | 0.341 | 0.398 | 0.050 | 0.027 | 0.051 | 0.025 | 0.030 | 0.059 |
| | 4976 | OTHR | 1.430 | -0.711 | 0.014 | 0.036 | -0.028 | 0.001 | -0.013 | -0.310 |
| | | TEMP | -7.092 | -6.953 | 0.638 | -7.681 | -8.655 | 0.012 | 0.039 | -0.305 |
| | | SEIS | 0.611 | 4.233 | 5.826 | 0.102 | 0.277 | 0.040 | 0.041 | 0.078 |
| | | HYDR | 0.135 | 0.170 | 0.146 | 0.021 | 0.023 | 0.009 | 0.004 | 0.052 |

## Table 3G.1-26 Combined Forces and Moments: RCCV, Selected Load Combination CV-11b (Continued)

| Location | Element ID | | Nx (MN/m) | Ny (MN/m) | Nxy (MN/m) | Mx (MNm/m) | My (MNm/m) | Mxy (MNm/m) | Qx (MN/m) | Qy (MN/m) |
|---|---|---|---|---|---|---|---|---|---|---|
| 9 RCCV Drywell Top | 4406 | OTHR | 0.602 | 0.077 | 0.106 | 0.258 | 1.551 | 0.007 | 0.009 | -0.507 |
| | | TEMP | 6.726 | 0.270 | -1.390 | -11.635 | -9.864 | 0.510 | 0.460 | -0.602 |
| | | SEIS | 1.923 | 2.201 | 3.826 | 0.374 | 2.035 | 0.074 | 0.087 | 0.482 |
| | | HYDR | 0.148 | 0.182 | 0.036 | 0.052 | 0.214 | 0.040 | 0.043 | 0.162 |
| | 4413 | OTHR | -0.064 | -2.250 | 0.234 | 0.196 | 1.681 | 0.041 | 0.004 | -0.642 |
| | | TEMP | -0.989 | -11.897 | -0.372 | -12.126 | -10.994 | 0.411 | -0.180 | 0.175 |
| | | SEIS | 1.311 | 5.546 | 3.537 | 0.199 | 1.434 | 0.163 | 0.053 | 0.196 |
| | | HYDR | 0.363 | 0.469 | 0.168 | 0.162 | 0.182 | 0.123 | 0.057 | 0.187 |
| | 4424 | OTHR | 1.076 | -0.398 | -0.005 | 0.367 | 1.945 | 0.022 | 0.002 | -0.604 |
| | | TEMP | -10.172 | -5.565 | 0.973 | -7.107 | -5.872 | -0.070 | -0.009 | -1.761 |
| | | SEIS | 1.049 | 3.271 | 6.202 | 0.107 | 0.570 | 0.029 | 0.044 | 0.067 |
| | | HYDR | 0.087 | 0.142 | 0.101 | 0.028 | 0.166 | 0.002 | 0.003 | 0.064 |
| 10 Basemat @ Center | 80003 | OTHR | -3.000 | -1.745 | 0.151 | 0.261 | 0.806 | -0.047 | 0.182 | -0.126 |
| | | TEMP | -1.587 | -2.420 | -0.001 | -8.464 | -8.777 | -0.040 | 0.022 | -0.010 |
| | | SEIS | 3.276 | 2.673 | 1.515 | 11.475 | 10.858 | 0.559 | 0.608 | 0.927 |
| | | HYDR | 0.689 | 0.634 | 0.057 | 2.545 | 2.321 | 0.042 | 0.180 | 0.166 |
| | 80007 | OTHR | -3.027 | -1.753 | 0.135 | 0.335 | 0.827 | -0.029 | 0.001 | -0.204 |
| | | TEMP | -1.600 | -2.375 | 0.039 | -8.444 | -8.779 | -0.040 | 0.014 | -0.014 |
| | | SEIS | 3.366 | 2.850 | 0.987 | 11.022 | 10.741 | 0.435 | 0.677 | 0.928 |
| | | HYDR | 0.688 | 0.622 | 0.051 | 2.496 | 2.314 | 0.045 | 0.157 | 0.193 |
| | 80012 | OTHR | -3.079 | -1.743 | 0.136 | 0.341 | 0.830 | -0.033 | -0.177 | -0.021 |
| | | TEMP | -1.607 | -2.298 | 0.028 | -8.433 | -8.799 | -0.031 | 0.005 | 0.001 |
| | | SEIS | 3.012 | 3.152 | 0.799 | 10.595 | 10.490 | 0.184 | 0.814 | 0.902 |
| | | HYDR | 0.671 | 0.603 | 0.038 | 2.471 | 2.290 | 0.035 | 0.219 | 0.134 |
| 11 Basemat Inside RPV Pedestal | 80206 | OTHR | -2.673 | -1.890 | 0.229 | -1.869 | -1.661 | 0.774 | 1.016 | -1.181 |
| | | TEMP | -1.604 | -2.924 | 0.120 | -8.962 | -9.256 | 0.034 | -0.007 | -0.049 |
| | | SEIS | 4.254 | 1.786 | 3.108 | 12.614 | 11.117 | 2.433 | 1.559 | 2.036 |
| | | HYDR | 0.804 | 0.702 | 0.105 | 3.702 | 3.366 | 0.602 | 0.480 | 0.476 |
| | 80213 | OTHR | -2.777 | -1.750 | 0.093 | -0.910 | -2.507 | -0.119 | -0.082 | -1.593 |
| | | TEMP | -1.721 | -2.346 | 0.088 | -8.685 | -9.343 | -0.166 | -0.026 | -0.164 |
| | | SEIS | 4.499 | 2.923 | 2.205 | 10.423 | 10.734 | 1.423 | 0.876 | 2.876 |
| | | HYDR | 0.736 | 0.640 | 0.058 | 3.062 | 3.834 | 0.416 | 0.337 | 0.605 |
| | 80224 | OTHR | -3.259 | -2.147 | 0.062 | -2.148 | -1.021 | -0.168 | -1.292 | -0.145 |
| | | TEMP | -1.574 | -2.175 | 0.061 | -8.644 | -8.932 | -0.052 | -0.105 | 0.019 |
| | | SEIS | 2.767 | 4.528 | 1.898 | 4.469 | 6.816 | 1.090 | 2.449 | 0.531 |
| | | HYDR | 0.659 | 0.470 | 0.058 | 3.723 | 2.907 | 0.313 | 0.598 | 0.262 |

## Table 3G.1-26 Combined Forces and Moments: RCCV, Selected Load Combination CV-11b (Continued)

| Location | Element ID | | Nx (MN/m) | Ny (MN/m) | Nxy (MN/m) | Mx (MNm/m) | My (MNm/m) | Mxy (MNm/m) | Qx (MN/m) | Qy (MN/m) |
|---|---|---|---|---|---|---|---|---|---|---|
| 12 S/P Slab @ RPV | 83306 | OTHR | -0.027 | 1.054 | -0.409 | -0.061 | 0.652 | -0.063 | 1.799 | -0.036 |
| | | TEMP | -11.672 | 3.835 | 0.218 | -9.639 | -8.194 | 0.035 | -0.073 | -0.040 |
| | | SEIS | 0.618 | 1.006 | 1.743 | 3.681 | 2.185 | 0.480 | 1.583 | 0.243 |
| | | HYDR | 0.990 | 0.616 | 0.366 | 0.765 | 0.514 | 0.058 | 1.530 | 0.036 |
| | 83313 | OTHR | 0.171 | 0.811 | -0.094 | -0.005 | 0.667 | 0.040 | 1.812 | 0.048 |
| | | TEMP | -11.910 | 4.316 | -0.426 | -9.668 | -8.271 | -0.025 | -0.075 | 0.011 |
| | | SEIS | 1.085 | 1.488 | 0.797 | 3.219 | 1.952 | 0.433 | 1.463 | 0.182 |
| | | HYDR | 0.927 | 0.623 | 0.255 | 0.751 | 0.465 | 0.104 | 1.507 | 0.030 |
| | 83324 | OTHR | 0.202 | 1.282 | 0.052 | -0.097 | 0.618 | -0.038 | 1.761 | -0.052 |
| | | TEMP | -11.696 | 4.693 | 0.966 | -9.530 | -8.130 | -0.002 | 0.004 | 0.007 |
| | | SEIS | 0.668 | 0.426 | 1.509 | 1.956 | 1.375 | 0.521 | 1.095 | 0.258 |
| | | HYDR | 0.959 | 0.664 | 0.265 | 0.716 | 0.420 | 0.072 | 1.470 | 0.036 |
| 13 S/P Slab @ Center | 83406 | OTHR | 0.193 | 0.783 | -0.308 | -2.586 | -0.542 | -0.028 | -0.076 | 0.003 |
| | | TEMP | -8.140 | -0.574 | -0.507 | -9.101 | -8.502 | 0.000 | -0.107 | 0.016 |
| | | SEIS | 0.498 | 1.242 | 1.400 | 1.035 | 1.101 | 0.361 | 0.933 | 0.026 |
| | | HYDR | 0.941 | 0.627 | 0.200 | 2.291 | 0.733 | 0.043 | 0.226 | 0.003 |
| | 83413 | OTHR | 0.513 | 0.576 | -0.017 | -2.559 | -0.548 | -0.004 | -0.066 | 0.002 |
| | | TEMP | -8.751 | 0.109 | 0.485 | -9.199 | -8.591 | -0.012 | -0.069 | -0.008 |
| | | SEIS | 1.126 | 1.180 | 0.726 | 1.014 | 0.969 | 0.298 | 0.828 | 0.011 |
| | | HYDR | 0.879 | 0.643 | 0.139 | 2.280 | 0.712 | 0.055 | 0.218 | 0.003 |
| | 83424 | OTHR | 0.362 | 0.996 | 0.027 | -2.526 | -0.541 | 0.005 | -0.097 | 0.000 |
| | | TEMP | -8.209 | 0.422 | 0.013 | -9.166 | -8.499 | 0.001 | -0.043 | 0.006 |
| | | SEIS | 0.934 | 0.394 | 0.771 | 0.910 | 0.679 | 0.362 | 0.502 | 0.007 |
| | | HYDR | 0.919 | 0.699 | 0.135 | 2.265 | 0.703 | 0.046 | 0.216 | 0.003 |
| 14 S/P Slab @ RCCV | 83506 | OTHR | 0.313 | 0.640 | -0.238 | 1.009 | -0.155 | -0.025 | -1.535 | 0.001 |
| | | TEMP | -6.270 | -2.431 | -0.382 | -8.852 | -8.637 | -0.050 | -0.135 | 0.021 |
| | | SEIS | 0.268 | 1.370 | 1.119 | 3.124 | 0.231 | 0.084 | 0.620 | 0.086 |
| | | HYDR | 0.849 | 0.624 | 0.149 | 1.309 | 0.196 | 0.015 | 1.419 | 0.008 |
| | 83513 | OTHR | 0.669 | 0.522 | 0.005 | 0.992 | -0.162 | -0.005 | -1.524 | 0.002 |
| | | TEMP | -7.033 | -2.078 | 0.612 | -9.208 | -8.687 | -0.011 | -0.022 | 0.001 |
| | | SEIS | 1.033 | 0.985 | 0.696 | 2.796 | 0.328 | 0.054 | 0.526 | 0.056 |
| | | HYDR | 0.795 | 0.647 | 0.132 | 1.278 | 0.187 | 0.017 | 1.416 | 0.007 |
| | 83524 | OTHR | 0.418 | 0.899 | 0.028 | 1.117 | -0.112 | -0.001 | -1.553 | 0.001 |
| | | TEMP | -6.237 | -1.445 | -0.080 | -9.171 | -8.643 | 0.017 | -0.039 | -0.005 |
| | | SEIS | 0.967 | 0.450 | 0.436 | 1.590 | 0.290 | 0.012 | 0.102 | 0.092 |
| | | HYDR | 0.836 | 0.714 | 0.124 | 1.287 | 0.175 | 0.015 | 1.415 | 0.006 |

## Table 3G.1-26 Combined Forces and Moments: RCCV, Selected Load Combination CV-11b (Continued)

| Location | Element ID | | Nx (MN/m) | Ny (MN/m) | Nxy (MN/m) | Mx (MNm/m) | My (MNm/m) | Mxy (MNm/m) | Qx (MN/m) | Qy (MN/m) |
|---|---|---|---|---|---|---|---|---|---|---|
| 15 Topslab @ Drywell Head Opening | 98120 | OTHR | See Tables 3G.5-17 to 3G.5-20 | | | | | | | |
| | | TEMP | | | | | | | | |
| | | SEIS | | | | | | | | |
| | | HYDR | | | | | | | | |
| | 98135 | OTHR | | | | | | | | |
| | | TEMP | | | | | | | | |
| | | SEIS | | | | | | | | |
| | | HYDR | | | | | | | | |
| | 98104 | OTHR | | | | | | | | |
| | | TEMP | | | | | | | | |
| | | SEIS | | | | | | | | |
| | | HYDR | | | | | | | | |
| 16 Topslab @ Center | 98149 | OTHR | | | | | | | | |
| | | TEMP | | | | | | | | |
| | | SEIS | | | | | | | | |
| | | HYDR | | | | | | | | |
| | 98170 | OTHR | | | | | | | | |
| | | TEMP | | | | | | | | |
| | | SEIS | | | | | | | | |
| | | HYDR | | | | | | | | |
| | 98109 | OTHR | | | | | | | | |
| | | TEMP | | | | | | | | |
| | | SEIS | | | | | | | | |
| | | HYDR | | | | | | | | |
| 17 Topslab @ RCCV | 98174 | OTHR | | | | | | | | |
| | | TEMP | | | | | | | | |
| | | SEIS | | | | | | | | |
| | | HYDR | | | | | | | | |
| | 98197 | OTHR | | | | | | | | |
| | | TEMP | | | | | | | | |
| | | SEIS | | | | | | | | |
| | | HYDR | | | | | | | | |
| | 98103 | OTHR | | | | | | | | |
| | | TEMP | | | | | | | | |
| | | SEIS | | | | | | | | |
| | | HYDR | | | | | | | | |

*OTHR: Loads other than thermal, seismic and hydrodynamic loads*
*TEMP: Thermal loads*
*SEIS: Seismic loads*
*HYDR: Hydrodyanmic loads*
*S/P Slab: Suppression Pool Slab*
*SI to U.S. Customary units conversion (SI units are the controlling units and U.S. Customary units are for reference only):*
*1 MN/m = $6.852 \times 10^4$ lbf/ft*
*1 MNm/m = $2.248 \times 10^5$ lbf-ft/ft*

## Table 3G.1-27 Sectional Thicknesses and Rebar Ratios of RCCV Used in the Evaluation

| Location | Element ID | Thickness (m) | Primary Reinforcement | | | | | Shear Tie | |
|---|---|---|---|---|---|---|---|---|---|
| | | | Position | Direction 1[1] | | Direction 2[1] | | | |
| | | | | Arrangement[2] | Ratio (%) | Arrangement[2] | Ratio (%) | Arrangement | Ratio (%) |
| 1 RPV Pedestal Bottom | 5006<br>5013<br>5024 | 2.4 | Inside | 2-#18@300 | 0.717 | 3-#18@3.6º<br>(+1-#18@3.6º) | 1.007 | #9@1.8ºx300 | 1.007 |
| | | | Outside | 3-#18@300 | 1.075 | 3-#18@1.8º<br>(+1-#18@1.8º) | 2.013 | | |
| 2 RPV Pedestal Mid-Height | 6006<br>6013<br>6024 | 2.4 | Inside | 2-#18@300 | 0.717 | 3-#18@3.6º | 0.755 | #9@3.6ºx600 | 0.252 |
| | | | Outside | 3-#18@300 | 1.075 | 3-#18@1.8º | 1.510 | | |
| 3 RPV Pedestal Top | 6606<br>6613<br>6624 | 2.4 | Inside | 2-#18@300<br>(+1-#18@300) | 1.075 | 3-#18@3.6º | 0.755 | #9@1.8ºx300 | 1.007 |
| | | | Outside | 3-#18@300<br>(+1-#18@300) | 1.434 | 3-#18@1.8º | 1.510 | | |
| 4 RCCV Wetwell Bottom | 1806<br>1813<br>1824 | 2.0 | Inside | 2-#18@300<br>+1-#18@600 | 1.075 | 3-#18@0.9º<br>(+1-#18@3.6º) | 1.405 | #9@1.2ºx300 | 0.540 |
| | | | Outside | 3-#18@300 | 1.290 | 3-#18@0.9º<br>(+1-#18@1.8º) | 1.513 | | |
| 5 RCCV Wetwell Mid-Height | 2606<br>2613<br>2624 | 2.0 | Inside | 2-#18@300<br>+1-#18@600 | 1.075 | 2-#18@0.9º | 0.865 | #9@1.2ºx600 | 0.270 |
| | | | Outside | 3-#18@300<br>+1-#18@600 | 1.505 | 3-#18@0.9º<br>+1-#18@0.9º | 1.729 | | |
| 6 RCCV Wetwell Top | 3406<br>3413<br>3424 | 2.0 | Inside | 2-#18@300<br>+1-#18@600<br>(+1-#18@600<br>+1-#18@600) | 1.720 | 2-#18@0.9º | 0.865 | #9@0.9ºx300 | 0.721 |
| | | | Outside | 3-#18@300<br>+1-#18@600<br>(+2-#18@600) | 1.935 | 3-#18@0.9º<br>+1-#18@0.9º | 1.729 | | |
| 7 RCCV Drywell Bottom | 3606<br>3613<br>3624 | 2.0 | Inside | 2-#18@300<br>+1-#18@600<br>(+2-#18@600) | 1.505 | 2-#18@0.9º | 0.865 | #9@0.9ºx300 | 0.721 |
| | | | Outside | 3-#18@300<br>+1-#18@300<br>(+1-#18@600<br>+1-#18@600) | 2.151 | 3-#18@0.9º<br>+1-#18@0.9º | 1.729 | | |
| 8 RCCV Drywell Mid-Height | 4006<br>4013<br>4976 | 2.0 | Inside | 2-#18@300<br>+1-#18@600 | 1.075 | 2-#18@0.9º | 0.865 | #9@1.2ºx600 | 0.270 |
| | | | Outside | 3-#18@300<br>+1-#18@600 | 1.505 | 3-#18@0.9º<br>+1-#18@0.9º | 1.729 | | |
| 9 RCCV Drywell Top | 4406<br>4413 | 2.0 | Inside | 2-#18@300<br>+1-#18@600 | 1.075 | 2-#18@0.9º | 0.865 | #9@1.2ºx300 | 0.540 |
| | | | Outside | 3-#18@300<br>+1-#18@600 | 1.505 | 3-#18@0.9º<br>+1-#18@0.9º | 1.729 | | |
| | 4424 | 2.0 | Inside | 2-#18@300 | 0.860 | 2-#18@0.9º<br>(+1-#18@1.8º) | 1.081 | #9@1.2ºx300 | 0.540 |
| | | | Outside | 3-#18@300 | 1.290 | 3-#18@0.9º | 1.297 | | |

## Table 3G.1-27 Sectional Thicknesses and Rebar Ratios of RCCV Used in the Evaluation (Continued)

| Location | Element ID | Thickness (m) | Primary Reinforcement | | | | | Shear Tie | |
|---|---|---|---|---|---|---|---|---|---|
| | | | Position | Direction 1[1] | | Direction 2[1] | | | |
| | | | | Arrangement[2] | Ratio (%) | Arrangement[2] | Ratio (%) | Arrangement | Ratio (%) |
| 10 Basemat @ Center | 80003<br>80007<br>80012 | 5.1 | Top | 3-#11@120 | 0.493 | 3-#11@120 | 0.493 | #9@600x600 | 0.179 |
| | | | Bottom | 5-#11@200 | 0.493 | 5-#11@200 | 0.493 | | |
| 11 Basemat Inside RPV Pedestal | 80206<br>80213<br>80224 | 5.1 | Top | 5-#11@1.8° | 0.507 | 4-#11@200<br>+1-#11@400 | 0.444 | #11@1.8°x400 | 1.292 |
| | | | Bottom | 5-#11@200 | 0.493 | 5-#11@200 | 0.493 | | |
| 12 S/P Slab @ RPV | 83306<br>83313<br>83324 | 2.0 | Top | 2-#18@1.8º | 0.913 | 2-#18@300 | 0.860 | #9@1.2ºx300 | 1.141 |
| | | | Bottom | 2-#18@1.8º | 0.913 | 2-#18@300 | 0.860 | | |
| 13 S/P Slab @ Center | 83406<br>83413<br>83424 | 2.0 | Top | 2-#18@0.9º | 1.264 | 2-#18@300 | 0.860 | #9@1.8ºx600 | 0.263 |
| | | | Bottom | 2-#18@0.9º | 1.264 | 2-#18@300 | 0.860 | | |
| 14 S/P Slab @ RCCV | 83506<br>83513<br>83524 | 2.0 | Top | 2-#18@0.9º | 0.966 | 2-#18@300 | 0.860 | #9@0.72ºx300 | 1.007 |
| | | | Bottom | 2-#18@0.9º | 0.966 | 2-#18@300 | 0.860 | | |
| 15 Top slab @ Drywell Head Opening | 98120<br>98135 | 2.4 | Top | See Table 3G.5-21 | | | | | |
| | | | Bottom | | | | | | |
| | 98104 | 2.4 | Top | | | | | | |
| | | | Bottom | | | | | | |
| 16 Top slab @ Center | 98149 | 2.4 | Top | | | | | | |
| | | | Bottom | | | | | | |
| | 93109 | 2.4 | Top | | | | | | |
| | | | Bottom | | | | | | |
| | 98170 | 2.4 | Top | | | | | | |
| | | | Bottom | | | | | | |
| *17 Top slab @ RCCV* | *98174* | *2.4* | *Top* | | | | | | |
| | | | *Bottom* | | | | | | |
| | *98197* | *2.4* | *Top* | | | | | | |
| | | | *Bottom* | | | | | | |
| | *98103* | *2.4* | *Top* | | | | | | |
| | | | *Bottom* | | | | | | |

*(1) RCCV, PedestalDirection 1: Hoop Direction 2: Vertical*
*S/P Slab: Suppression Pool Slab Direction 1: Radial Direction 2: Circumferential*
*Top slab Direction 1: N-S Direction 2: E-W*
*Basemat @center Direction 1: N-S Direction 2: E-W*
*Basemat Inside RPV Pedestal Direction 1: Top: Radial, Bottom: N-S Direction 2: Top: Circumferential, Bottom: E-W*
*(2) Rebar in parenthesis indicates additional bars locally required.*
*SI to U.S. Customary units conversion (SI units are the controlling units and U.S. Customary units are for reference only):*
*1 m = 3.28 ft*

## Table 3G.1-28 *Rebar and Concrete Stresses of RCCV: Selected Load Combination CV-1*

| Location | Element ID | Concrete Stress (MPa) | | Primary Reinforcement Stress (MPa) | | | | |
|---|---|---|---|---|---|---|---|---|
| | | Calculated | Allowable | Calculated | | | | Allowable |
| | | | | Direction 1* | | Direction 2* | | |
| | | | | In/Top | Out/Bottom | In/Top | Out/Bottom | |
| 1 RPV | 5006 | -4.1 | -15.5 | -2.5 | -3.4 | -10.4 | -24.5 | 310.2 |
| Pedestal | 5013 | -4.4 | -15.5 | -4.2 | -4.2 | -10.4 | -26.0 | 310.2 |
| Bottom | 5024 | -4.0 | -15.5 | -3.1 | -4.9 | -10.1 | -23.7 | 310.2 |
| 2 RPV | 6006 | -3.1 | -15.5 | 33.4 | 23.2 | -21.0 | -17.4 | 310.2 |
| Pedestal | 6013 | -3.1 | -15.5 | 19.4 | 21.6 | -21.1 | -17.1 | 310.2 |
| Mid-Height | 6024 | -2.1 | -15.5 | 49.0 | 17.0 | -13.8 | -12.9 | 310.2 |
| 3 RPV | 6606 | -4.7 | -15.5 | 24.6 | 5.2 | -0.9 | -25.4 | 310.2 |
| Pedestal | 6613 | -4.6 | -15.5 | 11.6 | 3.3 | -5.1 | -25.9 | 310.2 |
| Top | 6624 | -4.3 | -15.5 | 26.3 | 6.1 | -4.6 | -24.0 | 310.2 |
| 4 RCCV | 1806 | -4.8 | -15.5 | 19.1 | 3.2 | 24.8 | -17.4 | 310.2 |
| Wetwell | 1813 | -5.1 | -15.5 | 15.2 | 2.4 | 23.4 | -18.7 | 310.2 |
| Bottom | 1824 | -4.6 | -15.5 | 24.9 | 5.0 | 18.3 | -18.1 | 310.2 |
| 5 RCCV | 2606 | -1.4 | -15.5 | 57.3 | 45.8 | -12.3 | 1.7 | 310.2 |
| Wetwell | 2613 | -1.6 | -15.5 | 48.7 | 41.5 | -16.5 | 1.9 | 310.2 |
| Mid-Height | 2624 | -1.7 | -15.5 | 58.9 | 44.4 | -10.2 | -1.7 | 310.2 |
| 6 RCCV | 3406 | -0.9 | -15.5 | 37.2 | 30.4 | 2.2 | -3.4 | 310.2 |
| Wetwell | 3413 | -1.0 | -15.5 | 30.6 | 27.8 | -16.9 | 3.3 | 310.2 |
| Top | 3424 | -0.6 | -15.5 | 33.6 | 24.5 | 0.5 | -6.3 | 310.2 |
| 7 RCCV | 3606 | -0.5 | -15.5 | 41.9 | 26.3 | 9.2 | -6.2 | 310.2 |
| Drywell | 3613 | -1.3 | -15.5 | 37.7 | 24.0 | -5.8 | -3.1 | 310.2 |
| Bottom | 3624 | -0.6 | -15.5 | 39.8 | 20.6 | 8.6 | -10.7 | 310.2 |
| 8 RCCV | 4006 | -0.2 | -15.5 | 37.1 | 28.0 | 0.8 | 10.5 | 310.2 |
| Drywell | 4013 | -1.4 | -15.5 | 36.2 | 30.4 | -7.0 | -1.0 | 310.2 |
| Mid-Height | 4976 | -0.2 | -15.5 | 40.7 | 24.7 | -1.2 | -0.9 | 310.2 |
| 9 RCCV | 4406 | -4.9 | -15.5 | 30.2 | 6.8 | 94.9 | -1.5 | 310.2 |
| Drywell | 4413 | -4.9 | -15.5 | 10.2 | 1.9 | 35.0 | -16.1 | 310.2 |
| Top | 4424 | -5.6 | -15.5 | 55.4 | 12.5 | 74.2 | -6.4 | 310.2 |
| 10 Basemat | 80003 | -0.7 | -12.4 | -4.3 | -2.8 | -1.6 | -1.7 | 310.2 |
| @ Center | 80007 | -0.7 | -12.4 | -4.3 | -2.9 | -1.6 | -1.7 | 310.2 |
| | 80012 | -0.7 | -12.4 | -4.4 | -3.0 | -1.6 | -1.7 | 310.2 |
| 11 Basemat | 80206 | -1.3 | -12.4 | -4.4 | 0.3 | -2.9 | 1.9 | 310.2 |
| Inside | 80213 | -1.2 | -12.4 | -2.5 | -1.6 | -4.2 | 6.4 | 310.2 |
| RPV Pedestal | 80224 | -1.2 | -12.4 | -5.4 | -0.5 | -3.0 | -0.3 | 310.2 |
| 12 S/P Slab | 83306 | -0.7 | -15.5 | 13.9 | 20.7 | 72.8 | 12.0 | 310.2 |
| @ RPV | 83313 | -0.2 | -15.5 | 0.8 | 18.5 | 55.8 | 0.9 | 310.2 |
| | 83324 | -0.2 | -15.5 | -3.1 | 22.0 | 67.7 | 15.7 | 310.2 |
| 13 S/P Slab | 83406 | -6.0 | -15.5 | -7.0 | 81.8 | 13.3 | 60.7 | 310.2 |
| @ Center | 83413 | -5.6 | -15.5 | -4.9 | 83.1 | 5.5 | 46.3 | 310.2 |
| | 83424 | -5.8 | -15.5 | -7.3 | 79.2 | 10.9 | 59.7 | 310.2 |
| 14 S/P Slab | 83506 | -3.6 | -15.5 | 67.2 | -12.6 | 25.8 | 18.0 | 310.2 |
| @ RCCV | 83513 | -3.1 | -15.5 | 69.7 | -8.5 | 13.5 | 10.9 | 310.2 |
| | 83524 | -3.9 | -15.5 | 66.1 | -14.4 | 28.5 | 19.0 | 310.2 |
| 15 Topslab | 98120 | -3.3 | -15.5 | 107.8 | 12.3 | 115.6 | 22.7 | 310.2 |
| @ Drywell Head | 98135 | -1.2 | -15.5 | 9.0 | -6.5 | -9.8 | 4.9 | 310.2 |
| Opening | 98104 | -4.1 | -15.5 | 82.3 | 10.6 | 146.9 | 14.5 | 310.2 |
| 16 Topslab | 98149 | -1.0 | -15.5 | 18.7 | 17.0 | 38.7 | 66.2 | 310.2 |
| @ Center | 98170 | -1.7 | -15.5 | 45.8 | 3.9 | 69.0 | 12.9 | 310.2 |
| | 98109 | -3.7 | -15.5 | 60.3 | 5.9 | 93.7 | 6.5 | 310.2 |
| 17 Topslab | 98174 | -2.7 | -15.5 | 33.2 | 46.5 | 44.4 | 44.0 | 310.2 |
| @ RCCV | 98197 | -2.7 | -15.5 | 10.5 | 26.1 | 8.3 | 106.5 | 310.2 |
| | 98103 | -3.7 | -15.5 | 33.9 | 59.3 | 52.7 | 45.9 | 310.2 |

*Note: Negative value means compression.*

| | | |
|---|---|---|
| *Note *: RCCV, Pedestal* | *Direction 1: Hoop* | *Direction 2: Vertical* |
| *S/P Slab: Suppression Pool Slab* | *Direction 1: Radial* | *Direction 2: Circumferential* |
| *Top slab* | *Direction 1: N-S* | *Direction 2: E-W* |
| *Basemat @center* | *Direction 1: N-S* | *Direction 2: E-W* |
| *Basemat Inside RPV Pedestal* | *Direction 1: Top :Radial, Bottom: N-S* | *Direction2 Top: Circumferential, Bottom: E-W* |

*SI to U.S. Customary units conversion (SI units are the controlling units and U.S. Customary units are for reference only):*
*1MPa = 145.038 psi*

## Table 3G.1-29 *Rebar and Concrete Stresses of RCCV: Selected Load Combination CV-7a*

| Location | Element ID | Concrete Stress (MPa) | | Primary Reinforcement Stress (MPa) | | | | |
|---|---|---|---|---|---|---|---|---|
| | | Calculated | Allowable | Calculated | | | | Allowable |
| | | | | Direction 1* | | Direction 2* | | |
| | | | | In/Top | Out/Bottom | In/Top | Out/Bottom | |
| 1 RPV | 5006 | -7.3 | -28.7 | -20.4 | 29.9 | -41.6 | -20.8 | 367.9 |
| Pedestal | 5013 | -7.9 | -28.7 | -22.7 | 8.1 | -43.7 | -17.2 | 367.9 |
| Bottom | 5024 | -7.4 | -28.7 | -22.8 | 30.6 | -41.0 | -16.1 | 367.9 |
| 2 RPV | 6006 | -7.8 | -28.7 | 7.4 | 90.1 | -45.1 | -24.8 | 367.9 |
| Pedestal | 6013 | -7.7 | -28.7 | -4.6 | 91.1 | -43.5 | 20.7 | 367.9 |
| Mid-Height | 6024 | -5.5 | -28.7 | 5.0 | 97.6 | -28.8 | 21.2 | 367.9 |
| 3 RPV | 6606 | -5.1 | -28.7 | 224.4 | 235.4 | 96.1 | -131.5 | 367.9 |
| Pedestal | 6613 | -7.8 | -28.7 | 216.9 | 233.5 | 23.6 | -60.1 | 367.9 |
| Top | 6624 | -11.0 | -28.7 | 220.6 | 226.9 | -101.7 | 45.8 | 367.9 |
| 4 RCCV | 1806 | -11.3 | -29.0 | 36.7 | 118.3 | 59.9 | 79.3 | 369.7 |
| Wetwell | 1813 | -9.6 | -29.0 | -9.7 | 20.4 | 40.5 | 50.9 | 369.7 |
| Bottom | 1824 | -10.9 | -29.0 | -44.0 | -29.7 | -31.6 | 69.6 | 369.7 |
| 5 RCCV | 2606 | -4.2 | -29.1 | -14.9 | 33.5 | -15.8 | 19.0 | 370.2 |
| Wetwell | 2613 | -3.8 | -29.1 | 24.8 | 102.6 | -20.3 | 6.0 | 370.2 |
| Mid-Height | 2624 | -4.2 | -29.1 | -19.9 | 11.7 | -15.6 | 4.2 | 370.2 |
| 6 RCCV | 3406 | -2.4 | -29.1 | 259.8 | 266.3 | -82.5 | 138.2 | 370.2 |
| Wetwell | 3413 | -8.5 | -29.1 | 217.4 | 229.9 | -163.9 | 93.1 | 370.2 |
| Top | 3424 | -9.4 | -29.1 | 276.4 | 292.1 | -126.8 | 123.7 | 370.2 |
| 7 RCCV | 3606 | -8.7 | -28.7 | 158.0 | 159.9 | -42.0 | 121.5 | 367.8 |
| Drywell | 3613 | -14.4 | -28.7 | 77.4 | 147.2 | -57.4 | 52.0 | 367.8 |
| Bottom | 3624 | -3.6 | -27.7 | 107.3 | 96.7 | -58.3 | 59.5 | 360.2 |
| 8 RCCV | 4006 | -3.5 | -28.7 | 104.8 | 145.0 | -48.8 | 78.4 | 367.8 |
| Drywell | 4013 | -10.2 | -28.7 | 75.4 | 135.9 | -46.6 | 64.5 | 367.8 |
| Mid-Height | 4976 | -1.3 | -27.7 | 96.4 | 85.5 | -27.0 | 35.3 | 360.2 |
| 9 RCCV | 4406 | -5.6 | -28.7 | 44.5 | 97.6 | 18.5 | -9.5 | 367.8 |
| Drywell | 4413 | -4.0 | -28.7 | -8.6 | 67.4 | 2.5 | -10.7 | 367.8 |
| Top | 4424 | -8.9 | -27.7 | 78.3 | 36.4 | 121.8 | -10.3 | 360.2 |
| 10 Basemat | 80003 | -4.9 | -23.2 | -16.6 | 14.2 | -14.6 | 13.8 | 370.2 |
| @ Center | 80007 | -4.8 | -23.2 | -16.8 | 13.2 | -14.5 | 13.8 | 370.2 |
| | 80012 | -4.8 | -23.2 | -16.9 | 12.8 | -14.2 | 14.0 | 370.2 |
| 11 Basemat | 80206 | -7.3 | -23.2 | -7.8 | 37.6 | -12.9 | 38.0 | 370.2 |
| Inside | 80213 | -7.2 | -23.2 | -5.1 | 25.7 | -13.2 | 56.7 | 370.2 |
| RPV Pedestal | 80224 | -6.6 | -23.2 | -11.9 | 34.4 | -11.0 | 30.7 | 370.2 |
| 12 S/P Slab | 83306 | -7.9 | -29.0 | -22.4 | -14.1 | -43.8 | -25.2 | 369.8 |
| @ RPV | 83313 | -4.0 | -29.0 | -58.4 | 67.5 | 126.6 | 284.3 | 369.8 |
| | 83324 | -3.7 | -29.0 | -47.4 | 83.2 | 154.3 | 304.9 | 369.8 |
| 13 S/P Slab | 83406 | -17.4 | -29.0 | -42.7 | 136.7 | 38.4 | 280.0 | 369.8 |
| @ Center | 83413 | -17.6 | -29.0 | -50.3 | 116.3 | 30.8 | 253.6 | 369.8 |
| | 83424 | -16.9 | -29.0 | -47.1 | 129.3 | 37.4 | 269.6 | 369.8 |
| 14 S/P Slab | 83506 | -5.5 | -29.0 | 41.5 | 57.2 | -4.7 | 181.0 | 369.8 |
| @ RCCV | 83513 | -22.4 | -29.0 | -143.6 | -155.7 | 30.9 | 146.9 | 369.8 |
| | 83524 | -6.4 | -29.0 | 21.3 | 40.6 | 27.4 | 173.6 | 369.8 |
| 15 Topslab | 98120 | -14.6 | -27.9 | 100.9 | -13.9 | 198.0 | 14.3 | 361.7 |
| @ Drywell Head | 98135 | -4.4 | -27.9 | -2.8 | -24.6 | -14.8 | 26.2 | 361.7 |
| Opening | 98104 | -12.4 | -27.9 | 37.8 | -2.5 | 239.2 | -11.3 | 361.7 |
| 16 Topslab | 98149 | -9.3 | -28.0 | -15.4 | 86.2 | 132.3 | 34.3 | 362.7 |
| @ Center | 98170 | -6.5 | -28.0 | 151.7 | 19.8 | 223.7 | 21.6 | 362.7 |
| | 98109 | -5.2 | -28.0 | 94.4 | 13.4 | 174.3 | 9.3 | 362.7 |
| 17 Topslab | 98174 | -9.0 | -28.0 | 94.6 | -4.7 | 140.4 | 9.8 | 362.7 |
| @ RCCV | 98197 | -1.9 | -28.0 | 143.3 | 64.6 | 152.0 | 103.2 | 362.7 |
| | 98103 | -2.6 | -28.0 | 22.6 | 5.2 | 89.6 | 5.8 | 362.7 |

*Note: Negative value means compression.*

| | | |
|---|---|---|
| *Note *: RCCV, Pedesta* | *Direction 1: Hoop* | *Direction 2: Vertical* |
| *S/P Slab: Supression Pool Slab* | *Direction 1: Radial* | *Direction 2: Circumferential* |
| *Top slab* | *Direction 1: N-S* | *Direction 2: E-W* |
| *Basemat @center* | *Direction 1: N-S* | *Direction 2: E-W* |
| *Basemat Inside RPV Pedestal* | *Direction 1: Top :Radial, Bottom: N-S* | *Direction 2 Top: Circumferential, Bottom: E-W* |

*SI to U.S. Customary units conversion (SI units are the controlling units and U.S. Customary units are for reference only):*
*1 MPa = 145.038 psi*

## Table 3G.1-30 Rebar and Concrete Stresses of RCCV: Selected Load Combination CV-7b

| Location | Element ID | Concrete Stress (MPa) | | Primary Reinforcement Stress (MPa) | | | | |
|---|---|---|---|---|---|---|---|---|
| | | Calculated | Allowable | Calculated | | | | Allowable |
| | | | | Direction 1* | | Direction 2* | | |
| | | | | In/Top | Out/Bottom | In/Top | Out/Bottom | |
| 1 RPV | 5006 | -14.8 | -27.9 | -82.3 | -25.1 | -31.5 | -10.3 | 361.6 |
| Pedestal | 5013 | -15.8 | -27.9 | -87.4 | -29.5 | -38.5 | -7.6 | 361.6 |
| Bottom | 5024 | -16.5 | -27.9 | -93.2 | -34.5 | -34.1 | -6.7 | 361.6 |
| 2 RPV | 6006 | -11.5 | -27.9 | -47.6 | 5.2 | -51.9 | 70.6 | 361.6 |
| Pedestal | 6013 | -12.7 | -27.9 | -47.0 | 14.6 | -59.2 | 71.4 | 361.6 |
| Mid-Height | 6024 | -12.3 | -27.9 | -46.4 | 34.3 | -42.0 | 59.5 | 361.6 |
| 3 RPV | 6606 | -20.2 | -27.9 | -121.5 | -75.0 | -34.0 | 8.9 | 361.6 |
| Pedestal | 6613 | -11.3 | -27.9 | -49.2 | -7.0 | -50.1 | 10.1 | 361.6 |
| Top | 6624 | -12.1 | -27.9 | -14.8 | 118.9 | -57.7 | 16.5 | 361.6 |
| 4 RCCV | 1806 | -12.2 | -28.3 | -12.5 | 117.0 | -24.8 | 95.4 | 364.4 |
| Wetwell | 1813 | -11.7 | -28.3 | -15.1 | 115.5 | -31.4 | 70.8 | 364.4 |
| Bottom | 1824 | -13.6 | -28.3 | -11.7 | 126.5 | -35.3 | 99.1 | 364.4 |
| 5 RCCV | 2606 | -10.5 | -28.2 | 20.6 | 183.0 | -28.4 | 85.9 | 363.8 |
| Wetwell | 2613 | -10.8 | -28.2 | 11.6 | 175.4 | -36.4 | 51.8 | 363.8 |
| Mid-Height | 2624 | -10.7 | -28.2 | 18.3 | 180.1 | -38.3 | 60.6 | 363.8 |
| 6 RCCV | 3406 | -11.2 | -28.2 | -45.6 | -1.1 | -32.1 | 104.4 | 363.8 |
| Wetwell | 3413 | -12.9 | -28.2 | -12.1 | 85.9 | -63.9 | -4.3 | 363.8 |
| Top | 3424 | -10.5 | -28.2 | -17.0 | 93.4 | -19.1 | 134.0 | 363.8 |
| 7 RCCV | 3606 | -14.8 | -27.7 | 15.6 | 152.1 | -40.7 | 149.8 | 360.2 |
| Drywell | 3613 | -13.9 | -27.7 | -21.1 | 77.5 | -65.7 | 7.8 | 360.2 |
| Bottom | 3624 | -7.1 | -26.7 | 25.8 | 129.3 | -5.2 | 149.1 | 352.9 |
| 8 RCCV | 4006 | -11.7 | -27.7 | 20.6 | 183.7 | -19.0 | 145.7 | 360.2 |
| Drywell | 4013 | -10.4 | -27.7 | 14.0 | 172.5 | -35.9 | 70.2 | 360.2 |
| Mid-Height | 4976 | -9.4 | -26.7 | 11.5 | 134.7 | -25.0 | 85.2 | 352.9 |
| 9 RCCV | 4406 | -6.3 | -27.7 | -29.0 | 175.7 | 86.2 | 48.4 | 360.2 |
| Drywell | 4413 | -8.6 | -27.7 | -22.4 | 81.4 | -9.2 | -11.6 | 360.2 |
| Top | 4424 | -7.8 | -26.7 | -10.5 | 117.8 | 6.9 | 61.2 | 352.9 |
| 10 Basemat | 80003 | -4.3 | -23.2 | -9.0 | 26.1 | -5.8 | 30.9 | 370.2 |
| @ Center | 80007 | -4.2 | -23.2 | -9.2 | 25.1 | -5.7 | 30.9 | 370.2 |
| | 80012 | -4.2 | -23.2 | -9.5 | 24.4 | -5.4 | 31.1 | 370.2 |
| 11 Basemat | 80206 | -6.4 | -23.2 | -3.6 | 46.9 | -6.4 | 53.7 | 370.2 |
| Inside | 80213 | -6.4 | -23.2 | 5.5 | 37.1 | -6.0 | 70.2 | 370.2 |
| RPV Pedestal | 80224 | -6.0 | -23.2 | -4.8 | 46.5 | -3.8 | 48.0 | 370.2 |
| 12 S/P Slab | 83306 | -12.2 | -28.3 | -48.5 | -24.1 | -40.0 | 77.2 | 364.4 |
| @ RPV | 83313 | -11.9 | -28.3 | -45.9 | -17.0 | -35.9 | 84.5 | 364.4 |
| | 83324 | -12.2 | -28.3 | -38.1 | -9.4 | -35.2 | 97.0 | 364.4 |
| 13 S/P Slab | 83406 | -21.5 | -28.3 | -59.9 | 113.8 | -13.4 | 306.7 | 364.4 |
| @ Center | 83413 | -21.4 | -28.3 | -28.1 | 205.3 | -13.3 | 298.9 | 364.4 |
| | 83424 | -19.4 | -28.3 | -37.3 | 186.7 | -10.6 | 316.6 | 364.4 |
| 14 S/P Slab | 83506 | -11.3 | -28.3 | 21.2 | 41.1 | -21.5 | 175.4 | 364.4 |
| @ RCCV | 83513 | -9.7 | -28.3 | 23.4 | 58.4 | -28.1 | 175.1 | 364.4 |
| | 83524 | -9.4 | -28.3 | 24.5 | 30.8 | -17.6 | 196.3 | 364.4 |
| 15 Topslab | 98120 | See Tables 3G.5-22 to 3G.5-25 | | | | | | |
| @ Drywell Head | 98135 | | | | | | | |
| Opening | 98104 | | | | | | | |
| 16 Topslab | 98149 | | | | | | | |
| @ Center | 98170 | | | | | | | |
| | 98109 | | | | | | | |
| 17 Topslab | 98174 | | | | | | | |
| @ RCCV | 98197 | | | | | | | |
| | 98103 | | | | | | | |

*Note: Negative value means compression.*

*Note *: RCCV, Pedesta — Direction 1: Hoop — Direction 2: Vertical*
*S/P Slab: Supression Pool Slab — Direction 1: Radial — Direction 2: Circumferential*
*Top slab — Direction 1: N-S — Direction 2: E-W*
*Basemat @center — Direction 1: N-S — Direction 2: E-W*
*Basemat Inside RPV Pedestal — Direction 1: Top :Radial, Bottom: N-S — Direction 2 Top: Circumferential, Bottom: E-W*

*SI to U.S. Customary units conversion (SI units are the controlling units and U.S. Customary units are for reference only):*
*1 MPa = 145.038 psi*

## Table 3G.1-31 *Rebar and Concrete Stresses of RCCV: Selected Load Combination CV-11a*

| Location | Element ID | Concrete Stress (MPa) | | Primary Reinforcement Stress (MPa) | | | | |
|---|---|---|---|---|---|---|---|---|
| | | Calculated | Allowable | Calculated | | | | Allowable |
| | | | | Direction 1* | | Direction 2* | | |
| | | | | In/Top | Out/Bottom | In/Top | Out/Bottom | |
| 1 RPV | 5006 | -14.6 | -28.7 | 92.3 | 121.9 | 260.6 | -20.6 | 367.9 |
| Pedestal | 5013 | -16.4 | -28.7 | 87.9 | 115.9 | 320.0 | 12.9 | 367.9 |
| Bottom | 5024 | -11.0 | -28.7 | 40.4 | 121.3 | 169.5 | 44.9 | 367.9 |
| 2 RPV | 6006 | -8.2 | -28.7 | 14.1 | 113.2 | -41.1 | 72.0 | 367.9 |
| Pedestal | 6013 | -8.7 | -28.7 | 5.5 | 127.8 | -47.4 | 74.9 | 367.9 |
| Mid-Height | 6024 | -7.1 | -28.7 | 78.6 | 167.8 | 139.6 | 91.0 | 367.9 |
| 3 RPV | 6606 | -5.7 | -28.7 | 269.4 | 256.7 | 268.0 | -143.6 | 367.9 |
| Pedestal | 6613 | -7.5 | -28.7 | 237.1 | 270.2 | 69.3 | 106.5 | 367.9 |
| Top | 6624 | -9.0 | -28.7 | 253.3 | 256.5 | -121.7 | 153.1 | 367.9 |
| 4 RCCV | 1806 | -10.0 | -29.0 | 140.0 | 213.4 | 220.7 | 125.8 | 369.7 |
| Wetwell | 1813 | -13.6 | -29.0 | 108.8 | 127.1 | 203.0 | 121.3 | 369.7 |
| Bottom | 1824 | -14.6 | -29.0 | -42.2 | 50.0 | 145.3 | 138.6 | 369.7 |
| 5 RCCV | 2606 | -7.5 | -29.1 | 51.3 | 106.2 | 201.6 | 159.1 | 370.2 |
| Wetwell | 2613 | -7.6 | -29.1 | 89.6 | 129.0 | 173.6 | 135.9 | 370.2 |
| Mid-Height | 2624 | -9.0 | -29.1 | 93.5 | 119.0 | 200.9 | 143.2 | 370.2 |
| 6 RCCV | 3406 | -7.8 | -29.1 | 296.4 | 295.0 | 138.0 | 181.1 | 370.2 |
| Wetwell | 3413 | -9.7 | -29.1 | 244.3 | 246.8 | -170.6 | 154.5 | 370.2 |
| Top | 3424 | -8.4 | -29.1 | 318.3 | 326.0 | -142.6 | 258.9 | 370.2 |
| 7 RCCV | 3606 | -8.9 | -28.7 | 203.5 | 187.8 | 70.7 | 206.6 | 367.8 |
| Drywell | 3613 | -8.5 | -28.7 | 109.5 | 165.5 | 79.3 | 71.9 | 367.8 |
| Bottom | 3624 | -9.2 | -27.7 | 165.6 | 129.7 | 99.5 | 174.6 | 360.2 |
| 8 RCCV | 4006 | -6.0 | -28.7 | 182.7 | 206.4 | 113.9 | 139.3 | 367.8 |
| Drywell | 4013 | -8.2 | -28.7 | 131.1 | 174.3 | 87.2 | 125.6 | 367.8 |
| Mid-Height | 4976 | -7.4 | -27.7 | 177.0 | 144.9 | 184.2 | 142.8 | 360.2 |
| 9 RCCV | 4406 | -5.7 | -28.7 | 110.8 | 180.5 | 199.1 | 88.3 | 367.8 |
| Drywell | 4413 | -7.1 | -28.7 | 34.3 | 112.1 | 208.9 | 49.9 | 367.8 |
| Top | 4424 | -7.9 | -27.7 | 227.5 | 141.9 | 209.3 | 113.7 | 360.2 |
| 10 Basemat | 80003 | -8.1 | -23.2 | -21.0 | 35.5 | -19.1 | 35.6 | 370.2 |
| @ Center | 80007 | -7.6 | -23.2 | -22.2 | 27.1 | -20.4 | 28.9 | 370.2 |
| | 80012 | -7.2 | -23.2 | -21.9 | 24.5 | -21.3 | 24.2 | 370.2 |
| 11 Basemat | 80206 | -9.2 | -23.2 | 73.7 | 46.8 | -4.6 | 56.6 | 370.2 |
| Inside | 80213 | -10.0 | -23.2 | 9.1 | 45.0 | -17.7 | 75.0 | 370.2 |
| RPV Pedestal | 80224 | -6.9 | -23.2 | -15.6 | 21.6 | -20.8 | 17.7 | 370.2 |
| 12 S/P Slab | 83306 | -9.9 | -29.0 | -26.1 | 52.0 | -57.6 | -34.8 | 369.8 |
| @ RPV | 83313 | -7.9 | -29.0 | 45.8 | -65.6 | 156.5 | 349.4 | 369.8 |
| | 83324 | -6.5 | -29.0 | 55.9 | 37.7 | 175.0 | 345.8 | 369.8 |
| 13 S/P Slab | 83406 | -12.7 | -29.0 | -29.7 | 110.8 | 45.8 | 290.5 | 369.8 |
| @ Center | 83413 | -15.1 | -29.0 | -40.3 | 81.5 | 34.2 | 251.9 | 369.8 |
| | 83424 | -12.9 | -29.0 | -38.8 | 86.4 | 42.6 | 236.8 | 369.8 |
| 14 S/P Slab | 83506 | -8.0 | -29.0 | 104.5 | 78.7 | 36.5 | 202.9 | 369.8 |
| @ RCCV | 83513 | -25.6 | -29.0 | -161.4 | -149.0 | 35.8 | 143.7 | 369.8 |
| | 83524 | -5.9 | -29.0 | 59.2 | -33.7 | 25.9 | 158.9 | 369.8 |
| 15 Topslab | 98120 | -14.6 | -27.9 | 95.4 | -15.6 | 225.2 | 33.7 | 361.7 |
| @ Drywell Head | 98135 | -4.8 | -27.9 | 20.0 | -27.8 | -15.2 | 28.4 | 361.7 |
| Opening | 98104 | -11.6 | -27.9 | 8.4 | -3.1 | 247.4 | -13.5 | 361.7 |
| 16 Topslab | 98149 | -7.1 | -28.0 | 103.5 | 5.5 | 125.6 | 25.4 | 362.7 |
| @ Center | 98170 | -6.4 | -28.0 | 255.5 | 50.3 | 261.0 | 24.4 | 362.7 |
| | 98109 | -3.5 | -28.0 | 109.9 | 16.9 | 201.7 | 24.2 | 362.7 |
| 17 Topslab | 98174 | -7.9 | -28.0 | 59.4 | 44.4 | 163.9 | 13.4 | 362.7 |
| @ RCCV | 98197 | -2.9 | -28.0 | 193.5 | 99.6 | 248.5 | 56.1 | 362.7 |
| | 98103 | -7.1 | -28.0 | 128.6 | 56.3 | 142.0 | 29.7 | 362.7 |

*Note: Negative value means compression.*

*Note *: RCCV, Pedesta — Direction 1: Hoop — Direction 2: Vertical*
*S/P Slab: Supression Pool Slab — Direction 1: Radial — Direction 2: Circumferential*
*Top slab — Direction 1: N-S — Direction 2: E-W*
*Basemat @center — Direction 1: N-S — Direction 2: E-W*
*Basemat Inside RPV Pedestal — Direction 1: Top :Radial, Bottom: N-S — Direction 2 Top: Circumferential, Bottom: E-W*

*SI to U.S. Customary units conversion (SI units are the controlling units and U.S. Customary units are for reference only):*
*1 MPa = 145.038 psi*

## Table 3G.1-32 *Rebar and Concrete Stresses of RCCV: Selected Load Combination CV-11b*

| Location | Element ID | Concrete Stress (MPa) | | Primary Reinforcement Stress (MPa) | | | | |
|---|---|---|---|---|---|---|---|---|
| | | Calculated | Allowable | Calculated | | | | Allowable |
| | | | | Direction 1* | | Direction 2* | | |
| | | | | In/Top | Out/Bottom | In/Top | Out/Bottom | |
| 1 RPV | 5006 | -18.3 | -27.9 | -90.9 | -29.2 | 167.5 | 11.2 | 361.6 |
| Pedestal | 5013 | -19.5 | -27.9 | -95.4 | -32.9 | 208.6 | 23.2 | 361.6 |
| Bottom | 5024 | -17.9 | -27.9 | -95.3 | -33.6 | -56.4 | 29.7 | 361.6 |
| 2 RPV | 6006 | -13.0 | -27.9 | -49.8 | 39.3 | -53.2 | 122.3 | 361.6 |
| Pedestal | 6013 | -13.7 | -27.9 | -53.9 | 22.1 | -64.5 | 125.8 | 361.6 |
| Mid-Height | 6024 | -14.2 | -27.9 | -53.0 | 99.9 | -44.4 | 134.8 | 361.6 |
| 3 RPV | 6606 | -21.7 | -27.9 | -125.4 | -78.1 | -42.8 | 29.0 | 361.6 |
| Pedestal | 6613 | -14.4 | -27.9 | -56.9 | -9.0 | -60.4 | 30.8 | 361.6 |
| Top | 6624 | -13.3 | -27.9 | -14.9 | 158.1 | -55.7 | 68.3 | 361.6 |
| 4 RCCV | 1806 | -17.8 | -28.3 | 107.3 | 229.9 | 162.9 | 201.9 | 364.4 |
| Wetwell | 1813 | -16.3 | -28.3 | 51.2 | 211.3 | 134.1 | 190.3 | 364.4 |
| Bottom | 1824 | -17.1 | -28.3 | 58.1 | 231.7 | 107.4 | 252.1 | 364.4 |
| 5 RCCV | 2606 | -10.3 | -28.2 | 41.1 | 218.9 | 81.2 | 207.0 | 363.8 |
| Wetwell | 2613 | -11.8 | -28.2 | 19.0 | 204.0 | -49.5 | 197.9 | 363.8 |
| Mid-Height | 2624 | -11.8 | -28.2 | 65.3 | 241.8 | 74.4 | 220.8 | 363.8 |
| 6 RCCV | 3406 | -14.2 | -28.2 | -41.9 | 53.7 | -47.6 | 167.7 | 363.8 |
| Wetwell | 3413 | -16.8 | -28.2 | -9.8 | 112.5 | -84.6 | 79.7 | 363.8 |
| Top | 3424 | -9.8 | -28.2 | 3.8 | 171.2 | 41.7 | 269.8 | 363.8 |
| 7 RCCV | 3606 | -16.4 | -27.7 | 38.0 | 190.5 | -55.0 | 240.1 | 360.2 |
| Drywell | 3613 | -18.2 | -27.7 | -19.9 | 84.9 | -89.8 | 31.5 | 360.2 |
| Bottom | 3624 | -7.4 | -26.7 | 121.1 | 192.8 | 141.5 | 281.8 | 352.9 |
| 8 RCCV | 4006 | -8.9 | -27.7 | 61.8 | 277.6 | -17.6 | 258.3 | 360.2 |
| Drywell | 4013 | -12.9 | -27.7 | 34.9 | 220.8 | -51.4 | 143.4 | 360.2 |
| Mid-Height | 4976 | -10.4 | -26.7 | 40.3 | 205.8 | -29.2 | 198.4 | 352.9 |
| 9 RCCV | 4406 | -6.9 | -27.7 | 71.3 | 277.5 | 65.7 | 210.6 | 360.2 |
| Drywell | 4413 | -11.3 | -27.7 | -18.5 | 154.9 | 118.8 | 47.1 | 360.2 |
| Top | 4424 | -9.3 | -26.7 | 29.7 | 225.5 | 83.2 | 204.3 | 352.9 |
| 10 Basemat | 80003 | -8.5 | -23.2 | 77.2 | 62.0 | 80.0 | 66.0 | 370.2 |
| @ Center | 80007 | -7.9 | -23.2 | 58.1 | 49.7 | 71.1 | 54.6 | 370.2 |
| | 80012 | -7.4 | -23.2 | 36.2 | 45.9 | 74.2 | 46.3 | 370.2 |
| 11 Basemat | 80206 | -8.1 | -23.2 | 172.5 | 67.4 | 15.8 | 84.9 | 370.2 |
| Inside | 80213 | -9.7 | -23.2 | 100.6 | 63.4 | 131.2 | 99.5 | 370.2 |
| RPV Pedestal | 80224 | -6.7 | -23.2 | 10.6 | 36.5 | 70.2 | 33.4 | 370.2 |
| 12 S/P Slab | 83306 | -16.1 | -28.3 | -56.4 | -47.5 | -49.3 | 113.2 | 364.4 |
| @ RPV | 83313 | -16.5 | -28.3 | -52.2 | -35.8 | -45.4 | 112.9 | 364.4 |
| | 83324 | -16.1 | -28.3 | -34.6 | 47.3 | -36.9 | 147.9 | 364.4 |
| 13 S/P Slab | 83406 | -18.3 | -28.3 | -48.5 | 96.8 | -17.0 | 323.2 | 364.4 |
| @ Center | 83413 | -20.3 | -28.3 | -21.4 | 172.5 | -13.8 | 315.3 | 364.4 |
| | 83424 | -16.4 | -28.3 | -32.3 | 146.3 | -8.8 | 290.4 | 364.4 |
| 14 S/P Slab | 83506 | -18.0 | -28.3 | 49.2 | 144.7 | -48.8 | 189.3 | 364.4 |
| @ RCCV | 83513 | -13.6 | -28.3 | 26.7 | 137.5 | -24.2 | 139.3 | 364.4 |
| | 83524 | -11.3 | -28.3 | -20.9 | 65.1 | -17.4 | 188.4 | 364.4 |
| 15 Topslab | 98120 | See Tables 3G.5-26 to 3G.5-29 | | | | | | |
| @ Drywell Head | 98135 | | | | | | | |
| Opening | 98104 | | | | | | | |
| 16 Topslab | 98149 | | | | | | | |
| @ Center | 98170 | | | | | | | |
| | 98109 | | | | | | | |
| 17 Topslab | 98174 | | | | | | | |
| @ RCCV | 98197 | | | | | | | |
| | 98103 | | | | | | | |

*Note: Negative value means compression.*

*Note *: RCCV, Pedesta — Direction 1: Hoop — Direction 2: Vertical*
*S/P Slab: Supression Pool Slab — Direction 1: Radial — Direction 2: Circumferential*
*Top slab — Direction 1: N-S — Direction 2: E-W*
*Basemat @center — Direction 1: N-S — Direction 2: E-W*
*Basemat Inside RPV Pedestal — Direction 1: Top :Radial, Bottom: N-S — Direction 2 Top: Circumferential, Bottom: E-W*

*SI to U.S. Customary units conversion (SI units are the controlling units and U.S. Customary units are for reference only):*
*1 MPa = 145.038 psi*

## Table 3G.1-33 *Transverse Shear of RCCV*

| Location | Element ID | LOAD ID | Shear Force Q (MN/m) | d (m) | Shear Stress (MPa) Vu | Vc | Vs | Shear Tie Ratio (%) required | provided |
|---|---|---|---|---|---|---|---|---|---|
| 1 RPV | 5006 | CV-11b | 7.50 | 1.99 | 4.44 | 2.89 | 1.55 | 0.386 | 1.010 |
| Pedestal | 5013 | CV-11a | 3.43 | 2.02 | 2.00 | 0.14 | 1.86 | 0.455 | 1.010 |
| Bottom | 5024 | CV-7b | 6.22 | 1.99 | 3.68 | 2.59 | 1.09 | 0.270 | 1.010 |
| 2 RPV | 6006 | CV-11b | 2.02 | 1.94 | 1.23 | 0.91 | 0.32 | 0.081 | 0.252 |
| Pedestal | 6013 | CV-11a | 2.83 | 1.94 | 1.72 | 0.77 | 0.95 | 0.231 | 0.252 |
| Mid-Height | 6024 | CV-11b | 2.60 | 1.94 | 1.58 | 0.88 | 0.70 | 0.174 | 0.252 |
| 3 RPV | 6606 | CV-11a | 3.62 | 1.99 | 2.14 | 0.66 | 1.48 | 0.362 | 1.010 |
| Pedestal | 6613 | CV-7a | 0.12 | 2.08 | 0.07 | 0.07 | 0.00 | 0.000 | 1.010 |
| Top | 6624 | CV-11a | 2.51 | 1.97 | 1.50 | 0.96 | 0.54 | 0.131 | 1.010 |
| 4 RCCV | 1806 | CV-11a | 1.16 | 1.59 | 0.86 | 0.22 | 0.64 | 0.155 | 0.540 |
| Wetwell | 1813 | CV-11a | 0.85 | 1.59 | 0.63 | 0.23 | 0.40 | 0.097 | 0.540 |
| Bottom | 1824 | CV-11b | 0.66 | 1.57 | 0.50 | 0.28 | 0.22 | 0.053 | 0.540 |
| 5 RCCV | 2606 | CV-11b | 0.25 | 1.59 | 0.18 | 0.18 | 0.00 | 0.000 | 0.270 |
| Wetwell | 2613 | CV-11a | 0.12 | 1.60 | 0.09 | 0.09 | 0.00 | 0.000 | 0.270 |
| Mid-Height | 2624 | CV-7b | 0.18 | 1.59 | 0.13 | 1.05 | 0.00 | 0.000 | 0.270 |
| 6 RCCV | 3406 | CV-7a | 2.21 | 1.59 | 1.63 | 0.65 | 0.99 | 0.240 | 0.721 |
| Wetwell | 3413 | CV-1 | 0.05 | 1.67 | 0.03 | 0.03 | 0.00 | 0.000 | 0.721 |
| Top | 3424 | CV-11a | 2.75 | 1.59 | 2.04 | 0.60 | 1.44 | 0.350 | 0.721 |
| 7 RCCV | 3606 | CV-11b | 2.30 | 1.66 | 1.63 | 0.00 | 1.63 | 0.408 | 0.721 |
| Drywell | 3613 | CV-7a | 0.09 | 1.62 | 0.06 | 0.06 | 0.00 | 0.000 | 0.721 |
| Bottom | 3624 | CV-11b | 2.68 | 1.59 | 1.98 | 0.03 | 1.96 | 0.499 | 0.721 |
| 8 RCCV | 4006 | CV-11b | 1.10 | 1.59 | 0.81 | 0.32 | 0.49 | 0.123 | 0.270 |
| Drywell | 4013 | CV-11a | 0.06 | 1.59 | 0.05 | 0.05 | 0.00 | 0.000 | 0.270 |
| Mid-Height | 4976 | CV-11a | 0.41 | 1.59 | 0.30 | 0.49 | 0.00 | 0.000 | 0.270 |
| 9 RCCV | 4406 | CV-11b | 1.44 | 1.59 | 1.07 | 0.28 | 0.79 | 0.196 | 0.540 |
| Drywell | 4413 | CV-11a | 0.20 | 1.67 | 0.14 | 0.14 | 0.00 | 0.000 | 0.540 |
| Top | 4424 | CV-7b | 1.39 | 1.54 | 1.06 | 0.92 | 0.15 | 0.038 | 0.540 |
| 10 Basemat | 80003 | CV-11b | 0.92 | 3.54 | 0.31 | 0.86 | 0.00 | 0.000 | 0.179 |
| @ Center | 80007 | CV-11b | 1.00 | 3.53 | 0.33 | 0.91 | 0.00 | 0.000 | 0.179 |
| | 80012 | CV-11b | 1.12 | 3.53 | 0.37 | 0.99 | 0.00 | 0.000 | 0.179 |
| 11 Basemat | 80206 | CV-11b | 4.23 | 4.63 | 1.08 | 1.57 | 0.00 | 0.000 | 1.290 |
| Inside | 80213 | CV-11b | 4.74 | 4.61 | 1.21 | 1.07 | 0.14 | 0.034 | 1.290 |
| RPV Pedestal | 80224 | CV-11b | 3.96 | 4.65 | 1.00 | 1.78 | 0.00 | 0.000 | 1.290 |
| 12 S/P Slab | 83306 | CV-11a | 4.24 | 1.53 | 3.27 | 2.38 | 0.89 | 0.217 | 1.140 |
| @ RPV | 83313 | CV-7a | 4.69 | 1.76 | 3.14 | 2.38 | 0.76 | 0.185 | 1.140 |
| | 83324 | CV-7a | 4.62 | 1.76 | 3.10 | 2.34 | 0.76 | 0.184 | 1.140 |
| 13 S/P Slab | 83406 | CV-1 | 0.13 | 1.76 | 0.08 | 0.08 | 0.00 | 0.000 | 0.263 |
| @ Center | 83413 | CV-1 | 0.12 | 1.76 | 0.07 | 0.07 | 0.00 | 0.000 | 0.263 |
| | 83424 | CV-1 | 0.16 | 1.76 | 0.09 | 0.09 | 0.00 | 0.000 | 0.263 |
| 14 S/P Slab | 83506 | CV-7a | 4.35 | 1.53 | 3.36 | 2.07 | 1.28 | 0.312 | 1.010 |
| @ RCCV | 83513 | CV-7b | 4.12 | 1.76 | 2.76 | 1.90 | 0.87 | 0.214 | 1.010 |
| | 83524 | CV-7a | 5.61 | 1.53 | 4.33 | 2.10 | 2.23 | 0.542 | 1.010 |
| 15 Topslab | 98120 | See Table 3G.5-30 | | | | | | | |
| @ Drywell Head | 98135 | | | | | | | | |
| Opening | 98104 | CV-7b | 3.21 | 1.93 | 1.96 | 1.50 | 0.46 | 0.118 | 0.358 |
| 16 Topslab | 98149 | CV-11b | 1.28 | 1.99 | 0.76 | 0.52 | 0.23 | 0.060 | 0.179 |
| @ Center | 98170 | See Table 3G.5-30 | | | | | | | |
| | 98109 | | | | | | | | |
| 17 Topslab | 98174 | | | | | | | | |
| @ RCCV | 98197 | CV-7b | 1.97 | 1.96 | 1.19 | 0.79 | 0.40 | 0.101 | 0.717 |
| | 98103 | See Table 3G.5-30 | | | | | | | |

*S/P Slap: Suppression Pool Slab SI to U.S. Customary units conversion (SI units are the controlling units and U.S. Customary units are for reference only):*

*1 MPa = 145.038 psi*

*1 MN/m = 6.852x10$^4$ lbf/ft*

*1 m = 3.28 ft*

## Table 3G.1-34 *Tangential Shear of RCCV*

| Location | Element ID | Load ID | Section Forces | | | Thickness | Rebar Area ($cm^2/m$) | | rAs/pAs | $v_{so}$ (MPa) | | $v_u$ (MPa) | |
|---|---|---|---|---|---|---|---|---|---|---|---|---|---|
| | | | Nx/Ny (MN/m) | Nxl/Nyl (MN/m) | V (MN/m) | t (m) | Required rAs | Provided pAs | | Calculated | Allowable | Calculated | Allowable $0.4f_c'-v_{so}$ |
| 1 RPV Pedestal Bottom | 5006 | CV-11a | -5.215 | 5.463 | 2.534 | 2.40 | 21.9 | 431.3 | 0.051 | 1.06 | 4.83 | 1.06 | 12.46 |
| | | CV-11a | -5.424 | -9.956 | -2.534 | 2.40 | 131.8 | 724.8 | 0.182 | 1.06 | 4.83 | 1.06 | 12.46 |
| | 5013 | CV-11a | -5.375 | -5.801 | -1.662 | 2.40 | 17.9 | 431.3 | 0.042 | 0.69 | 4.83 | 0.69 | 12.82 |
| | | CV-11a | -5.735 | -13.595 | -1.662 | 2.40 | 216.4 | 724.8 | 0.299 | 0.69 | 4.83 | 0.69 | 12.82 |
| | 5024 | CV-11a | -5.523 | 3.414 | -3.359 | 2.40 | -19.9 | 431.3 | -0.046 | 1.40 | 4.83 | 1.40 | 12.12 |
| | | CV-11a | -5.151 | -9.187 | 3.359 | 2.40 | 125.9 | 724.8 | 0.174 | 1.40 | 4.83 | 1.40 | 12.12 |
| 2 RPV Pedestal Mid-Height | 6006 | CV-11a | 0.847 | 1.197 | 3.269 | 2.40 | 117.7 | 431.3 | 0.273 | 1.36 | 4.83 | 1.36 | 12.16 |
| | | CV-11a | -5.047 | -6.716 | 3.269 | 2.40 | 65.8 | 543.6 | 0.121 | 1.36 | 4.83 | 1.36 | 12.16 |
| | 6013 | CV-11a | 0.434 | 1.502 | 1.761 | 2.40 | 74.7 | 431.3 | 0.173 | 0.73 | 4.83 | 0.73 | 12.78 |
| | | CV-11a | -5.386 | -7.754 | 1.761 | 2.40 | 69.7 | 543.6 | 0.128 | 0.73 | 4.83 | 0.73 | 12.78 |
| | 6024 | CV-11a | 0.529 | -1.071 | 5.128 | 2.40 | 156.8 | 431.3 | 0.364 | 2.14 | 4.83 | 2.14 | 11.38 |
| | | CV-11a | -3.050 | -5.458 | -5.128 | 2.40 | 120.7 | 543.6 | 0.222 | 2.14 | 4.83 | 2.14 | 11.38 |
| 3 RPV Pedestal Top | 6606 | CV-11a | 21.310 | 1.821 | 2.838 | 2.40 | 670.9 | 602.4 | 1.114 | 1.18 | 4.83 | 1.18 | 12.33 |
| | | CV-11a | -3.349 | 4.992 | -2.838 | 2.40 | 65.1 | 543.6 | 0.120 | 1.18 | 4.83 | 1.18 | 12.33 |
| | 6613 | CV-11a | 21.130 | -2.587 | 1.302 | 2.40 | 653.1 | 602.4 | 1.084 | 0.54 | 4.83 | 0.54 | 12.97 |
| | | CV-11a | -3.740 | 5.376 | 1.302 | 2.40 | 48.7 | 543.6 | 0.090 | 0.54 | 4.83 | 0.54 | 12.97 |
| | 6624 | CV-11a | 22.450 | -1.796 | -3.408 | 2.40 | 715.0 | 602.4 | 1.187 | 1.42 | 4.83 | 1.42 | 12.10 |
| | | CV-11a | -2.826 | 5.643 | -3.408 | 2.40 | 102.4 | 543.6 | 0.188 | 1.42 | 4.83 | 1.42 | 12.10 |
| 4 RCCV Wetwell Bottom | 1806 | CV-11a | 2.459 | 2.258 | -6.054 | 2.00 | 241.3 | 474.0 | 0.509 | 3.03 | 4.85 | 3.03 | 10.61 |
| | | CV-11a | -2.674 | 7.237 | 6.054 | 2.00 | 182.9 | 584.0 | 0.313 | 3.03 | 4.85 | 3.03 | 10.61 |
| | 1813 | CV-11a | 1.926 | 1.686 | -4.807 | 2.00 | 189.9 | 474.0 | 0.401 | 2.40 | 4.85 | 2.40 | 11.23 |
| | | CV-11a | -4.816 | 8.594 | 4.807 | 2.00 | 136.1 | 584.0 | 0.233 | 2.40 | 4.85 | 2.40 | 11.23 |
| | 1824 | CV-11a | 3.097 | -1.402 | 7.151 | 2.00 | 280.8 | 474.0 | 0.592 | 3.58 | 4.85 | 3.58 | 10.06 |
| | | CV-11a | -5.384 | -7.837 | -7.151 | 2.00 | 141.3 | 584.0 | 0.242 | 3.58 | 4.85 | 3.58 | 10.06 |

## Table 3G.1-34 Tangential Shear of RCCV (Continued)

| Location | Element ID | Load ID | Section Forces | | | Thickness | Rebar Area ($cm^2/m$) | | rAs/pAs | $v_{so}$ (MPa) | | $v_u$ (MPa) | |
|---|---|---|---|---|---|---|---|---|---|---|---|---|---|
| | | | Nx/Ny (MN/m) | Nxl/Nyl (MN/m) | V (MN/m) | t (m) | Required rAs | Provided pAs | | Calculated | Allowable | Calculated | Allowable $0.4f_c'-v_{so}$ |
| 5 RCCV Wetwell Mid-Height | 2606 | CV-11a | 3.212 | 1.053 | -5.695 | 2.00 | 243.2 | 518.0 | 0.469 | 2.85 | 4.85 | 2.85 | 10.82 |
| | | CV-11a | -2.149 | 5.645 | 5.695 | 2.00 | 158.5 | 519.0 | 0.305 | 2.85 | 4.85 | 2.85 | 10.82 |
| | 2613 | CV-11a | 1.970 | -1.390 | 4.710 | 2.00 | 185.9 | 518.0 | 0.359 | 2.35 | 4.85 | 2.35 | 11.31 |
| | | CV-11a | -4.878 | 6.891 | 4.710 | 2.00 | 93.7 | 519.0 | 0.181 | 2.35 | 4.85 | 2.35 | 11.31 |
| | 2624 | CV-11a | 2.981 | 1.100 | -6.534 | 2.00 | 259.5 | 518.0 | 0.501 | 3.27 | 4.85 | 3.27 | 10.40 |
| | | CV-11a | -5.395 | 6.525 | 6.534 | 2.00 | 103.7 | 519.0 | 0.200 | 3.27 | 4.85 | 3.27 | 10.40 |
| 6 RCCV Wetwell Top | 3406 | CV-11a | 12.270 | -0.890 | -5.123 | 2.00 | 471.9 | 732.0 | 0.645 | 2.56 | 4.85 | 2.56 | 11.11 |
| | | CV-11a | -1.121 | 4.244 | -5.123 | 2.00 | 149.4 | 519.0 | 0.288 | 2.56 | 4.85 | 2.56 | 11.11 |
| | 3413 | CV-11a | 9.959 | -0.833 | -4.355 | 2.00 | 388.8 | 732.0 | 0.531 | 2.18 | 4.85 | 2.18 | 11.49 |
| | | CV-11a | -5.076 | -5.818 | 4.355 | 2.00 | 59.2 | 519.0 | 0.114 | 2.18 | 4.85 | 2.18 | 11.49 |
| | 3424 | CV-11a | 12.970 | 0.780 | 5.796 | 2.00 | 508.3 | 732.0 | 0.694 | 2.90 | 4.85 | 2.90 | 10.77 |
| | | CV-11a | -6.242 | 5.319 | -5.796 | 2.00 | 43.9 | 519.0 | 0.085 | 2.90 | 4.85 | 2.90 | 10.77 |
| 7 RCCV Drywell Bottom | 3606 | CV-11a | 8.869 | -0.850 | 4.838 | 2.00 | 374.7 | 732.0 | 0.512 | 2.42 | 4.82 | 2.42 | 11.09 |
| | | CV-11a | -0.303 | -4.017 | -4.838 | 2.00 | 162.7 | 519.0 | 0.314 | 2.42 | 4.82 | 2.42 | 11.09 |
| | 3613 | CV-11a | 6.543 | -0.890 | -4.051 | 2.00 | 290.6 | 732.0 | 0.397 | 2.03 | 4.82 | 2.03 | 11.49 |
| | | CV-11a | -5.059 | -5.672 | 4.051 | 2.00 | 52.0 | 519.0 | 0.100 | 2.03 | 4.82 | 2.03 | 11.49 |
| | 3624 | CV-11a | -1.503 | -0.717 | 5.484 | 2.00 | 111.8 | 732.0 | 0.153 | 2.74 | 4.74 | 2.74 | 10.28 |
| | | CV-11a | -7.889 | 5.133 | -5.484 | 2.00 | -10.5 | 519.0 | -0.020 | 2.74 | 4.74 | 2.74 | 10.28 |
| 8 RCCV Drywell Mid-Height | 4006 | CV-11a | 6.865 | -1.685 | 4.463 | 2.00 | 316.3 | 518.0 | 0.611 | 2.23 | 4.82 | 2.23 | 11.28 |
| | | CV-11a | 0.325 | 3.274 | -4.463 | 2.00 | 159.3 | 519.0 | 0.307 | 2.23 | 4.82 | 2.23 | 11.28 |
| | 4013 | CV-11a | 5.737 | -1.361 | -3.907 | 2.00 | 268.4 | 518.0 | 0.518 | 1.95 | 4.82 | 1.95 | 11.56 |
| | | CV-11a | -6.359 | -5.125 | 3.907 | 2.00 | 2.3 | 519.0 | 0.004 | 1.95 | 4.82 | 1.95 | 11.56 |
| | 4976 | CV-11a | -0.868 | -0.691 | 5.752 | 2.00 | 136.7 | 518.0 | 0.264 | 2.88 | 4.74 | 2.88 | 10.14 |
| | | CV-11a | -7.229 | -4.391 | 5.752 | 2.00 | 0.2 | 519.0 | 0.000 | 2.88 | 4.74 | 2.88 | 10.14 |
| 9 RCCV Drywell Top | 4406 | CV-11b | 6.052 | -1.918 | 3.779 | 2.00 | 285.7 | 518.0 | 0.551 | 1.89 | 4.74 | 1.89 | 11.13 |
| | | CV-11a | -0.692 | -2.901 | 3.779 | 2.00 | 110.7 | 519.0 | 0.213 | 1.89 | 4.82 | 1.89 | 11.62 |
| | 4413 | CV-11a | 2.288 | -1.407 | -3.363 | 2.00 | 161.3 | 518.0 | 0.311 | 1.68 | 4.82 | 1.68 | 11.83 |
| | | CV-11a | -7.150 | -4.833 | 3.363 | 2.00 | -34.3 | 519.0 | -0.066 | 1.68 | 4.82 | 1.68 | 11.83 |
| | 4424 | CV-11a | -4.353 | 0.966 | -5.943 | 2.00 | 46.3 | 430.0 | 0.108 | 2.97 | 4.74 | 2.97 | 10.05 |
| | | CV-11a | -6.413 | -3.925 | 5.943 | 2.00 | 19.7 | 476.0 | 0.041 | 2.97 | 4.74 | 2.97 | 10.05 |

*Note: Top and bottom lines for each element indicate evaluation results for hoop and vertical rebars, respectively.*
*Nomenclature:*

*Nx, Ny: axial forces in the hoop and vertical directions due to pressure and dead loads, respectively*

*Nxl, Nyl: axial forces in the hoop and vertical directions due to lateral loads, respectively*

*V: tangential shear due to lateral loads*

*vso: tangential shear stress borne by orthogonal rebars (Refer to Table 3.8-3.)*

*SI to U.S. Customary units conversion (SI units are the controlling units and U.S. Customary units are for reference only): 1 MPa = 145.038 psi, 1 MN/m = $6.852 \times 10^4$ lbf/ft,*

*1 m = 3.28 ft*

## Table 3G.1-35 Containment Liner Plate Strains (Max)

| Category | Calculated Strain | | | | | Allowable Tension<br>Allowable Compression |
|---|---|---|---|---|---|---|
| | Cylinder | Pedestal | DW Bottom | WW Bottom | Top Slab | |
| Test | 0.0004<br>-0.0012 | 0.0004<br>-0.0006 | 0.0000<br>-0.0001 | 0.0002<br>-0.0002 | 0.0003<br>-0.0001 | 0.002<br>-0.002 |
| Normal Operation | 0.0005<br>-0.0008 | 0.0005<br>-0.0010 | 0.0001<br>-0.0003 | 0.0004<br>-0.0006 | 0.0002<br>-0.0005 | 0.002<br>-0.002 |
| Severe Environment | 0.0005<br>-0.0008 | 0.0005<br>-0.0010 | 0.0001<br>-0.0003 | 0.0004<br>-0.0006 | 0.0002<br>-0.0005 | 0.003<br>-0.005 |
| Extreme Environment | 0.0005<br>-0.0008 | 0.0005<br>-0.0010 | 0.0001<br>-0.0003 | 0.0004<br>-0.0006 | 0.0002<br>-0.0005 | 0.003<br>-0.005 |
| Abnormal; LOCA | 0.0007<br>-0.0034 | 0.0005<br>-0.0028 | 0.0001<br>-0.0003 | 0.0004<br>-0.0022 | 0.0006<br>-0.0017 | 0.003<br>-0.005 |
| Abnormal/Extreme Environment | 0.0014<br>-0.0041 | 0.0007<br>-0.0030 | 0.0002<br>-0.0004 | 0.0009<br>-0.0026 | 0.0008<br>-0.0019 | 0.003<br>-0.005 |

## Table 3G.1-35 Containment Liner Plate Strains (Max) (Continued)

| Category | Calculated Strain | | Allowable Tension<br>Allowable Compression |
|---|---|---|---|
| | D/F Thick Plate | Pedestal Thick Plate | |
| Test | 0.0005<br>-0.0002 | 0.0002<br>-0.0002 | 0.002<br>-0.002 |
| Normal Operation | 0.0002<br>-0.0005 | 0.0002<br>-0.0007 | 0.002<br>-0.002 |
| Severe Environment | 0.0002<br>-0.0005 | 0.0002<br>-0.0007 | 0.003<br>-0.005 |
| Extreme Environment | 0.0002<br>-0.0005 | 0.0002<br>-0.0007 | 0.003<br>-0.005 |
| Abnormal; LOCA | 0.0008<br>-0.0017 | 0.0003<br>-0.0021 | 0.003<br>-0.005 |
| Abnormal/Extreme Environment | 0.0009<br>-0.0017 | 0.0004<br>-0.0022 | 0.003<br>-0.005 |

## Table 3G.1-36 Drywell Head Elements Stress Summary

| Service Level | $P_L$ | | $P_L+P_b$ | | $P_L+P_b+Q$ | |
|---|---|---|---|---|---|---|
| | Calculated Stress (MPa) | Allowable Stress (MPa) | Calculated Stress (MPa) | Allowable Stress (MPa) | Calculated Stress (MPa) | Allowable Stress (MPa) |
| Test Condition | 77 | 262 | 77 | 262 | - | - |
| Design Condition | 66 | 227 | 66 | 227 | - | - |
| A, B | 78 | 227 | 78 | 227 | 797(1) | 456 |
| C | 103 | 342 | 103 | 342 | - | - |
| D | 103 | 430 | 103 | 430 | - | - |

*(1) Acceptable by meeting all requirements for simplified elastic-plastic analysis stipulated in NE-3228.3 of ASME B&PV Code, Sec. III*

*SI to U.S. Customary units conversion (SI units are the controlling units and U.S. Customary units are for reference only):*
*1 MPa = 145.038 psi*

## Table 3G.1-37 Diaphragm Floor (D/F) Slab Elements Stress Summary

| Structural Elements | Member Size | Governing Load Combination | Stress or Stress Ratio | Allowable Stress | Acceptance Criteria*2 |
|---|---|---|---|---|---|
| Top Plate*1 | 25mm | Normal<br>Normal | $\sigma min$ = -214MPa<br>$\tau max$ = 107MPa | $\sigma$ = 261MPa<br>$\tau$ = 174MPa | 1.0S<br>1.0S |
| Bottom Plate | 25mm | Normal<br>Normal | $\sigma max$ = 202MPa<br>$\tau max$ = 101MPa | $\sigma$ = 272MPa<br>$\tau$ = 181MPa | 1.0S<br>1.0S |
| Radial Web Plate (Upper Web) | 25mm | Abnormal<br>Normal | $\sigma min$ = -343MPa<br>$\tau max$ = 168MPa | $\sigma$ = 391MPa<br>$\tau$ = 174MPa | 1.5S<br>1.0S |
| Radial Web Plate (Lower Web)*1 | 25mm | Normal<br>Abnormal/Extreme | $\sigma min$ = -229MPa<br>$\tau max$ = 224MPa | $\sigma$ = 261MPa<br>$\tau$ = 253MPa | 1.0S<br>1.4S |
| Tangential Web Plate | 25mm | Abnormal<br>Abnormal/Extreme | $\sigma min$ = -334MPa<br>$\tau max$ = 201MPa | $\sigma$ = 391MPa<br>$\tau$ = 243MPa | 1.5S<br>1.4S |
| Bottom Flange*1 | 38mm | Normal<br>Normal | $\sigma min$ = -186MPa<br>$\tau max$ = 93MPa | $\sigma$ = 269MPa<br>$\tau$ = 181MPa | 1.0S<br>1.0S |

*1 *Thermal stress associated with extreme and abnormal load conditions meets deformation limits of AISC N690 Subsection Q1.5.7.2. The total stress excluding thermal stress satisfies the allowable stress limit in Table Q1.5.7.1 of AISC N690.*

*2 *S = Allowable stress limit specified in part 1 of AISC N690.*

*SI to U.S. Customary units conversion (SI units are the controlling units and U.S. Customary units are for reference only):*
*1 MPa = 145.038 psi*
*1 mm = 0.0393 in*

## Table 3G.1-38 Diaphragm Floor (D/F) Slab Anchorage Structural Capacity

| Anchor Locations | Governing Load Combination | Design Load (kN) | No. of Anchor Bars Provided | Total Capacity (kN) | Acceptance Criteria*(1) |
|---|---|---|---|---|---|
| Top Plate | Normal (SIT) | 736/deg | 1-#18 @ 0.9 deg | 782/deg | 0.66Fy |
| Bottom Plate | Normal | 151/deg | 1-#18 @ 0.9 deg | 592/deg | 0.5Fy |
| Girder Radial Web Plate | Abnormal/Extreme | 3418 | 5-#18 | 4804 | 0.9Fy |
| Girder Bottom Flange | Abnormal/Extreme | 1020 | 5-#18 | 4804 | 0.9Fy |

*(1) $F_y$ = Specified minimum yield stress.*

*SI to U.S. Customary units conversion (SI units are the controlling units and U.S. Customary units are for reference only):*
*1 kN = 224.809 lbf*

## Table 3G.1-39 Vent Wall Structural Elements Stress Summary

| Structural Elements | Member Size | Governing Load Combination | Calculated Stress | Allowable Stress | Acceptance Criteria[1] |
|---|---|---|---|---|---|
| Inner Cylinder | 25mm | Abnormal/Extreme<br>Abnormal/Extreme | $\sigma min$= -221MPa<br>$\tau max$= 139MPa | $\sigma$ = 417MPa<br>$\tau$ = 243MPa | 1.6S<br>1.4S |
| Outer Cylinder | 25mm | Abnormal/Extreme<br>Abnormal/Extreme | $\sigma min$ = -239MPa<br>$\tau max$ = 139MPa | $\sigma$ = 435MPa<br>$\tau$ = 253MPa | 1.6S<br>1.4S |
| Radial Web Plate | 25mm | Abnormal<br>Abnormal/Extreme | $\sigma min$ = -263MPa<br>$\tau max$ = 173MPa | $\sigma$ = 391MPa<br>$\tau$ = 243MPa | 1.5S<br>1.4S |

*(1) S = Allowable stress limit specified in part 1 of AISC N690.*

*SI to U.S. Customary units conversion (SI units are the controlling units and U.S. Customary units are for reference only):*
*1 MPa = 145.038 psi*
*1 mm = 0.0393 in*

## Table 3G.1-40 Reactor Shield Wall (RSW) Structural Element Stress Summary

| Structural Element | Member Size | Governing Load Combination | Calculated Stress | Allowable | Acceptance Criteria[1] |
|---|---|---|---|---|---|
| RSW | 210mm | Abnormal | $\sigma min = -277MPa$ | $\sigma = 391MPa$ | 1.5S |
| Cylindrical Shell | 210mm | Abnormal/Extreme | $\tau max = 145MPa$ | $\tau = 243MPa$ | 1.4S |

*(1) S = Allowable stress limit specified in part 1 of AISC N690.*

*SI to U.S. Customary units conversion (SI units are the controlling units and U.S. Customary units are for reference only):*
*1 MPa = 145.038 psi*
*1 mm = 0.0393 in*

## Table 3G.1-41 RPV Support Bracket Structural Elements Stress Summary

| Structural Elements | Member Size | Governing Load Combination | Stress or Stress Ratio | Allowable Stress | Acceptance Criteria[1] |
|---|---|---|---|---|---|
| Horizontal Plate | 100mm<br>150mm | Abnormal/Extreme<br>Severe | $\sigma min = -191MPa$<br>$\tau max = 45MPa$ | $\sigma = 417MPa$<br>$\tau = 94MPa$ | 1.6S<br>1.0S |
| Vertical Plate | 150mm<br>150mm | Abnormal/Extreme<br>Abnormal/Extreme | $\sigma min = -164MPa$<br>$\tau max = 98MPa$ | $\sigma = 225MPa$<br>$\tau = 131MPa$ | 1.6S<br>1.4S |

*(1) S = Allowable stress limit specified in Part 1 of AISC N690.*

*SI to U.S. Customary units conversion (SI units are the controlling units and U.S. Customary units are for reference only):*
*1 MPa = 145.038 psi*
*1 mm = 0.0393 in*

## Table 3G.1-42 Vent Wall and RPV Support Bracket Anchorage Structural Capacity

| Anchor Locations | Governing Load Combination | Design Load (kN) | No. of Anchor Bars Provided | Total Capacity (kN) | Acceptance Criteria[1] |
|---|---|---|---|---|---|
| Vent Wall | Abnormal/Extreme | 1365/deg | 4-#18 @ 1.8deg | 2112/deg | 0.9Fy |
| RPV Support Bracket | Abnormal/Extreme | 33185 | 72-#18 | 69178 | 0.9Fy |

*(1) Fy = Specified minimum yield stress.*

*SI to U.S. Customary units conversion (SI units are the controlling units and U.S. Customary units are for reference only):*
*1 MPa = 145.038 psi*
*1 mm = 0.0393 in*

## Table 3G.1-43 GDCS Pool Structural Elements Stress Summary

| Structural Elements | Member Size | Governing Load Combination | Stress or Stress Ratio | Allowable Stress | Acceptance Criteria[1] |
|---|---|---|---|---|---|
| Wall Plate | 16mm | Abnormal<br>Abnormal/Extreme | $\sigma min$= -371MPa<br>$\tau max$= 203MPa | $\sigma$ = 391MPa<br>$\tau$ = 243MPa | 1.5S<br>1.4S |
| Vertical Column | HSS550mmx550mmx25mm | Severe<br>Severe | Ratio = 0.56<br>$\tau$ = 51MPa | Ratio = 1.0<br>$\tau$ = 174MPa | 1.0S<br>1.0S |
| Vertical Column | HSS800mmx800mmx65mm | Abnormal<br>Severe | Ratio = 0.44<br>$\tau$ = 33MPa | Ratio = 1.0<br>$\tau$ = 174MPa | 1.5S<br>1.0S |
| Horizontal Member | HSS450mmx450mmx25mm | Abnormal/Extreme<br>Abnormal/Extreme | Ratio = 0.44<br>$\tau$ = 27MPa | Ratio = 1.0<br>$\tau$ = 243MPa | 1.6S<br>1.4S |
| Bracing Member | HSS350mmx350mmx35mm | Severe<br>Abnormal/Extreme | Ratio = 0.44<br>$\tau$ = 29MPa | Ratio = 1.0<br>$\tau$ = 243MPa | 1.0S<br>1.4S |

*(1) S = Allowable stress limit specified in Part 1 of AISC N690.*

*SI to U.S. Customary units conversion (SI units are the controlling units and U.S. Customary units are for reference only):*
*1 MPa = 145.038 psi*
*1 mm = 0.0393 in*

## Table 3G.1-44 GDCS Pool Anchorage Structural Capacity

| Anchor Locations | Governing Load Combination | Design Load/Anchor Bar (kN) | Capacity/Anchor Bar (kN) | Acceptance Criteria[1] |
|---|---|---|---|---|
| Bracing Members @ RCCV Wall | Abnormal/Extreme | 657 | 960 | 0.9Fy |
| Horizontal Members @ RCCV Wall | Abnormal/Extreme | 711 | 960 | 0.9Fy |

*(1) $F_y$ = Specified minimum yield stress.*

*SI to U.S. Customary units conversion (SI units are the controlling units and U.S. Customary units are for reference only):*
*1 kN = 224.809 lbf*

## Table 3G.1-45 *Combined Forces and Moments: RB, Selected Load Combination RB-4*

| Location | Element ID | | Nx (MN/m) | Ny (MN/m) | Nxy (MN/m) | Mx (MNm/m) | My (MNm/m) | Mxy (MNm/m) | Qx (MN/m) | Qy (MN/m) |
|---|---|---|---|---|---|---|---|---|---|---|
| 18 Wall Below RCCV Bottom | 6 | OTHR | -1.555 | -7.556 | -0.217 | -0.203 | -1.484 | -0.004 | 0.000 | -0.343 |
| | | TEMP | 1.628 | -0.267 | -0.739 | 0.099 | 1.178 | -0.043 | 0.016 | 0.044 |
| | 13 | OTHR | -1.526 | -5.797 | -0.069 | -0.547 | -2.894 | 0.007 | -0.004 | -0.800 |
| | | TEMP | 0.500 | -3.267 | -0.851 | 0.466 | 2.640 | -0.003 | 0.023 | 0.576 |
| | 24 | OTHR | -1.088 | -6.308 | -0.198 | -0.613 | -3.706 | 0.000 | 0.001 | -1.245 |
| | | TEMP | 0.791 | -3.390 | 0.142 | 0.480 | 2.679 | -0.006 | -0.001 | 0.596 |
| 19 Wall Below RCCV Mid-Height | 806 | OTHR | -1.570 | -6.314 | -0.142 | -0.008 | -0.036 | -0.031 | -0.016 | -0.096 |
| | | TEMP | 1.438 | -1.233 | 0.113 | 0.162 | 1.001 | 0.089 | -0.059 | 0.052 |
| | 813 | OTHR | -2.077 | -5.627 | 0.100 | -0.040 | 0.060 | -0.009 | -0.004 | -0.081 |
| | | TEMP | 0.801 | -3.203 | -0.655 | 0.112 | 1.009 | -0.029 | 0.009 | 0.603 |
| | 824 | OTHR | -2.350 | -6.245 | -0.080 | 0.118 | 0.441 | 0.012 | -0.001 | 0.099 |
| | | TEMP | 0.618 | -3.509 | 0.100 | 0.129 | 1.019 | 0.019 | 0.011 | 0.540 |
| 20 Wall Below RCCV Top | 1606 | OTHR | -1.034 | -5.635 | 0.064 | 0.044 | 0.266 | 0.031 | 0.007 | -0.191 |
| | | TEMP | 9.010 | -2.016 | 0.181 | -0.500 | -2.273 | 0.101 | 0.089 | 1.713 |
| | 1613 | OTHR | -1.230 | -5.399 | 0.236 | 0.018 | 0.253 | -0.001 | -0.002 | -0.190 |
| | | TEMP | 8.724 | -3.628 | -0.531 | -0.636 | -3.693 | -0.004 | -0.014 | 2.219 |
| | 1624 | OTHR | -0.815 | -5.802 | -0.021 | -0.015 | -0.191 | 0.005 | -0.008 | 0.003 |
| | | TEMP | 9.355 | -4.562 | -0.137 | -0.712 | -3.632 | -0.005 | -0.066 | 2.268 |
| 21 Exterior Wall @ EL-11.50 to -10.50m | 20011 | OTHR | -2.253 | -3.856 | -0.807 | 0.095 | 0.681 | 0.010 | 0.046 | 0.221 |
| | | TEMP | 3.715 | 3.601 | 0.919 | 0.284 | 1.218 | 0.038 | -0.186 | 0.357 |
| | 20023 | OTHR | -1.511 | -1.520 | -0.589 | -0.013 | -0.247 | 0.020 | -0.032 | -0.138 |
| | | TEMP | -1.892 | -1.622 | 2.144 | 2.538 | 5.046 | 0.244 | 0.376 | 0.822 |
| | 30010 | OTHR | -1.694 | -2.495 | -0.259 | -0.332 | -1.767 | 0.015 | 0.002 | 1.168 |
| | | TEMP | 0.175 | 2.955 | -0.157 | 1.319 | 4.158 | -0.022 | -0.030 | -0.727 |
| | 30020 | OTHR | -1.290 | -1.597 | -0.210 | -0.698 | -0.856 | 0.025 | -0.256 | 0.369 |
| | | TEMP | -0.154 | -1.324 | -0.285 | 0.170 | 1.409 | 0.142 | -0.039 | -0.357 |
| | 40001 | OTHR | -0.998 | -1.836 | 0.308 | -0.425 | -1.297 | -0.265 | 0.133 | 0.769 |
| | | TEMP | -0.205 | -0.878 | -0.095 | 0.220 | 1.540 | -0.094 | 0.145 | -0.398 |
| | 40011 | OTHR | -1.637 | -3.392 | -0.032 | -0.397 | -2.272 | -0.004 | 0.007 | 2.058 |
| | | TEMP | 1.019 | 3.116 | 0.054 | 1.305 | 4.252 | 0.008 | 0.014 | -0.766 |
| 22 Exterior Wall @ EL4.65 to 6.60m | 22011 | OTHR | -0.238 | -3.253 | 0.761 | -0.005 | 0.070 | 0.012 | -0.024 | 0.113 |
| | | TEMP | 2.586 | 3.076 | -0.119 | -0.101 | -0.086 | 0.038 | 0.020 | 0.147 |
| | 22023 | OTHR | -0.107 | -1.767 | 0.024 | 0.006 | 0.018 | -0.065 | 0.073 | 0.020 |
| | | TEMP | 2.357 | -5.300 | -2.630 | -0.374 | 0.466 | -0.053 | 0.922 | 0.549 |
| | 32010 | OTHR | -0.381 | -2.072 | 0.000 | -0.025 | -0.085 | 0.000 | 0.001 | -0.009 |
| | | TEMP | 16.055 | 7.706 | 0.016 | -3.506 | -3.286 | -0.003 | -0.003 | -0.226 |
| | 32020 | OTHR | -0.049 | -1.912 | -0.003 | -0.099 | -0.076 | -0.017 | -0.039 | 0.020 |
| | | TEMP | 0.404 | 5.236 | 2.974 | -0.744 | -2.379 | -0.509 | 0.936 | 0.144 |
| | 42001 | OTHR | -0.038 | -2.000 | -0.034 | -0.085 | -0.111 | 0.058 | 0.032 | 0.054 |
| | | TEMP | 2.925 | 3.711 | 3.106 | -0.956 | -2.146 | -0.063 | -0.860 | -0.349 |
| | 42011 | OTHR | -0.559 | -2.719 | -0.051 | -0.035 | -0.167 | 0.003 | 0.006 | 0.024 |
| | | TEMP | 13.976 | 5.189 | 0.082 | -3.633 | -3.196 | 0.101 | 0.088 | -0.115 |
| 23 Exterior Wall @ EL22.50 to 24.60m | 24211 | OTHR | -0.233 | -1.964 | 0.122 | -0.078 | -0.523 | 0.004 | -0.004 | -0.047 |
| | | TEMP | 3.696 | 2.547 | -0.486 | -0.016 | 0.049 | 0.013 | -0.150 | 2.136 |
| | 24224 | OTHR | -0.025 | -1.202 | 0.368 | 0.064 | -0.039 | -0.047 | -0.089 | -0.025 |
| | | TEMP | 0.155 | 4.828 | -4.303 | 0.833 | -0.313 | -0.715 | -0.808 | -0.293 |
| | 34210 | OTHR | -0.027 | -0.876 | 0.015 | -0.003 | -0.054 | 0.001 | 0.003 | 0.001 |
| | | TEMP | 17.402 | 5.781 | -0.557 | -3.633 | -3.490 | 0.035 | -0.012 | -0.199 |
| | 34220 | OTHR | 0.042 | -0.946 | -0.187 | 0.044 | -0.032 | -0.008 | 0.047 | 0.002 |
| | | TEMP | 2.056 | 4.894 | 2.979 | 0.866 | -2.104 | -0.558 | 1.943 | 0.152 |
| | 44201 | OTHR | 0.037 | -1.119 | -0.345 | 0.048 | -0.014 | 0.018 | -0.042 | -0.003 |
| | | TEMP | 1.125 | 5.799 | -0.132 | 0.393 | -2.344 | 0.550 | -2.362 | 0.138 |

## *Table 3G.1-45 Combined Forces and Moments: RB, Selected Load Combination RB-4* (Continued)

| Location | Element ID | | Nx (MN/m) | Ny (MN/m) | Nxy (MN/m) | Mx (MNm/m) | My (MNm/m) | Mxy (MNm/m) | Qx (MN/m) | Qy (MN/m) |
|---|---|---|---|---|---|---|---|---|---|---|
| 24 Basemat @ Wall Below RCCV | 90140 | OTHR | -4.104 | -3.415 | -0.092 | -2.171 | -1.139 | 2.657 | -2.118 | 1.895 |
| | | TEMP | 1.347 | 1.833 | 1.711 | 1.409 | 0.026 | -1.327 | -0.666 | -0.175 |
| | 90182 | OTHR | -3.771 | -3.257 | -0.029 | 0.477 | -2.537 | -0.110 | 0.012 | 0.534 |
| | | TEMP | 1.856 | 0.556 | 0.778 | -0.094 | -4.006 | 0.225 | -0.199 | 3.084 |
| | 90111 | OTHR | -5.053 | -3.293 | 0.000 | -3.338 | 0.350 | -0.364 | 0.094 | 0.137 |
| | | TEMP | 0.687 | 3.065 | -0.002 | -4.393 | -0.535 | 0.044 | 3.217 | 0.151 |
| 25 Slab EL4.65m @ RCCV | 93140 | OTHR | -0.520 | -0.089 | 0.153 | 0.055 | 0.084 | -0.060 | 0.132 | -0.109 |
| | | TEMP | -0.966 | 2.070 | 3.424 | -0.522 | -0.407 | 0.286 | -0.137 | 0.110 |
| | 93182 | OTHR | -0.134 | -0.248 | 0.040 | 0.007 | 0.001 | 0.002 | -0.003 | -0.051 |
| | | TEMP | 3.050 | -3.501 | -1.013 | -0.380 | -1.928 | -0.084 | 0.079 | 1.425 |
| | 93111 | OTHR | -0.318 | 0.071 | 0.026 | -0.068 | -0.008 | -0.003 | 0.012 | -0.005 |
| | | TEMP | -3.104 | 3.895 | -0.106 | -1.892 | -0.348 | -0.048 | 1.246 | 0.002 |
| 26 Slab EL17.5m @ RCCV | 96144 | OTHR | -0.093 | 0.182 | 0.208 | 0.054 | 0.075 | -0.058 | 0.129 | -0.102 |
| | | TEMP | 0.051 | 3.471 | 3.892 | -0.198 | -0.171 | 0.135 | -0.037 | 0.056 |
| | 96186 | OTHR | 0.286 | -0.076 | 0.012 | -0.011 | -0.044 | -0.004 | -0.001 | -0.011 |
| | | TEMP | 3.507 | -2.461 | -1.416 | -0.131 | -0.625 | -0.042 | 0.023 | 0.503 |
| | 96113 | OTHR | -0.058 | 0.660 | -0.014 | -0.274 | -0.011 | -0.013 | 0.300 | 0.036 |
| | | TEMP | -5.649 | -4.999 | -0.952 | -4.725 | -3.463 | -0.182 | 0.956 | -0.039 |
| 27 Slab EL27.0m @ RCCV | 98472 | OTHR | 0.456 | 0.111 | 0.049 | 0.159 | 0.240 | -0.199 | 0.229 | -0.253 |
| | | TEMP | -0.639 | -1.108 | 5.881 | -0.552 | -0.184 | -0.203 | 0.423 | -0.561 |
| | 98514 | OTHR | 0.049 | 0.183 | 0.074 | 0.024 | 0.057 | 0.025 | -0.003 | -0.136 |
| | | TEMP | -0.752 | -3.184 | -1.455 | -0.689 | -0.528 | -0.028 | 0.049 | -0.488 |
| | 98424 | OTHR | -0.098 | 0.483 | -0.015 | 1.858 | 0.440 | 0.008 | -1.199 | -0.094 |
| | | TEMP | -11.294 | -12.507 | -1.614 | 0.502 | -0.662 | 0.174 | -6.706 | -0.088 |
| 28 Pool Girder @ Storage Pool | 123054 | OTHR | 0.400 | -2.583 | -0.849 | 0.048 | 0.031 | 0.055 | -0.011 | -0.032 |
| | | TEMP | 0.751 | -3.964 | 1.802 | 2.885 | 2.797 | 0.041 | -0.399 | 0.710 |
| | 123154 | OTHR | 1.277 | -0.549 | -0.660 | 0.078 | 0.032 | 0.101 | 0.018 | 0.011 |
| | | TEMP | 1.146 | 0.864 | -0.343 | 2.404 | 1.445 | -0.430 | -0.139 | 0.303 |
| 29 Pool Girder @ Well | 123062 | OTHR | 0.465 | 0.628 | 0.344 | -0.027 | -0.178 | 0.030 | 0.002 | -0.096 |
| | | TEMP | -3.702 | -0.209 | -0.675 | 0.125 | 0.180 | 0.046 | -0.120 | 0.099 |
| | 123162 | OTHR | -1.564 | 0.164 | 0.198 | -0.079 | -0.064 | 0.025 | 0.095 | 0.042 |
| | | TEMP | -3.313 | -0.169 | -0.673 | 0.094 | -0.259 | 0.073 | -0.235 | 0.126 |
| 30 Pool Girder @ Buffer Pool | 123067 | OTHR | 0.510 | -2.451 | 1.525 | 0.019 | -0.049 | -0.077 | -0.126 | -0.061 |
| | | TEMP | -3.957 | -6.147 | -2.164 | 0.701 | 0.523 | -0.099 | -0.149 | 0.671 |
| | 123167 | OTHR | 0.520 | -0.620 | 1.330 | 0.043 | 0.025 | 0.019 | -0.034 | 0.011 |
| | | TEMP | -3.687 | -3.040 | -2.757 | 0.227 | -0.680 | -0.298 | 0.028 | 0.199 |
| 31 MS Tunnel Wall and Slab | 150122 | OTHR | -0.024 | 0.030 | 0.299 | 0.026 | 0.060 | 0.018 | -0.011 | -0.040 |
| | | TEMP | 0.347 | -0.696 | 2.372 | 1.402 | 4.093 | -0.043 | -0.760 | 0.539 |
| | 96611 | OTHR | -0.008 | 0.285 | -0.012 | 0.078 | -0.047 | -0.051 | -0.081 | 0.016 |
| | | TEMP | -0.316 | 3.589 | -0.223 | -1.462 | -8.773 | -0.478 | 0.477 | 0.241 |
| | 98614 | OTHR | -0.022 | -0.160 | -0.020 | 0.019 | -0.556 | -0.067 | -0.059 | 0.031 |
| | | TEMP | -0.229 | 2.949 | -0.177 | -0.935 | -13.249 | 0.048 | 0.556 | 0.370 |

*OTHR: Loads other than thermal loads*
*TEMP: Thermal loads*
*SI to U.S. Customary units conversion (SI units are the controlling units and U.S. Customary units are for reference only):*
*1 MN/m = $6.852 \times 10^4$ lbf/ft*
*1 MNm/m = $2.248 \times 10^5$ lbf-ft/ft*

## Table 3G.1-46 Combined Forces and Moments: RB, Selected Load Combination RB-8a

| Location | Element ID | | Nx (MN/m) | Ny (MN/m) | Nxy (MN/m) | Mx (MNm/m) | My (MNm/m) | Mxy (MNm/m) | Qx (MN/m) | Qy (MN/m) |
|---|---|---|---|---|---|---|---|---|---|---|
| 18 Wall Below RCCV Bottom | 6 | OTHR | -1.541 | -5.995 | -0.270 | 0.038 | -0.070 | -0.006 | 0.004 | 0.093 |
| | | TEMP | 1.177 | -0.473 | -0.669 | 0.101 | 1.063 | -0.040 | 0.024 | 0.044 |
| | | HYDR | 1.039 | 2.403 | 0.505 | 0.296 | 1.689 | 0.004 | 0.014 | 0.592 |
| | 13 | OTHR | -1.447 | -4.554 | -0.005 | -0.261 | -1.275 | 0.006 | -0.005 | -0.316 |
| | | TEMP | 0.307 | -3.027 | -0.689 | 0.408 | 2.284 | -0.002 | 0.019 | 0.475 |
| | | HYDR | 0.829 | 2.427 | 0.515 | 0.223 | 1.312 | 0.006 | 0.011 | 0.454 |
| | 24 | OTHR | -1.294 | -4.939 | -0.149 | -0.302 | -1.843 | -0.002 | 0.003 | -0.634 |
| | | TEMP | 0.412 | -3.041 | 0.146 | 0.425 | 2.350 | -0.005 | -0.002 | 0.516 |
| | | HYDR | 0.902 | 2.658 | 0.484 | 0.159 | 1.002 | 0.005 | 0.010 | 0.355 |
| 19 Wall Below RCCV Mid-Height | 806 | OTHR | -1.097 | -4.803 | -0.222 | 0.011 | 0.064 | -0.019 | -0.014 | -0.066 |
| | | TEMP | 1.601 | -1.332 | 0.182 | 0.235 | 1.292 | 0.083 | -0.053 | -0.063 |
| | | HYDR | 0.305 | 2.384 | 0.674 | 0.023 | 0.125 | 0.031 | 0.004 | 0.037 |
| | 813 | OTHR | -1.488 | -4.507 | 0.140 | -0.014 | 0.141 | -0.005 | 0.004 | -0.021 |
| | | TEMP | 1.036 | -2.990 | -0.508 | 0.175 | 1.290 | -0.027 | 0.006 | 0.450 |
| | | HYDR | 0.236 | 2.472 | 0.691 | 0.032 | 0.124 | 0.010 | 0.003 | 0.108 |
| | 824 | OTHR | -1.773 | -4.807 | -0.044 | 0.110 | 0.418 | 0.009 | -0.001 | 0.111 |
| | | TEMP | 0.890 | -3.046 | 0.126 | 0.176 | 1.306 | 0.019 | 0.010 | 0.396 |
| | | HYDR | 0.259 | 2.709 | 0.633 | 0.018 | 0.131 | 0.014 | 0.002 | 0.067 |
| 20 Wall Below RCCV Top | 1606 | OTHR | -0.020 | -4.191 | -0.098 | -0.227 | -1.320 | 0.024 | 0.005 | 0.308 |
| | | TEMP | 11.606 | -2.042 | 0.301 | -0.668 | -3.250 | 0.099 | 0.085 | 2.306 |
| | | HYDR | 0.777 | 2.430 | 0.657 | 0.469 | 2.639 | 0.013 | 0.006 | 0.763 |
| | 1613 | OTHR | -0.209 | -4.449 | 0.240 | -0.255 | -1.334 | -0.003 | -0.003 | 0.337 |
| | | TEMP | 11.229 | -3.474 | -0.425 | -0.785 | -4.386 | -0.008 | -0.014 | 2.714 |
| | | HYDR | 0.778 | 2.470 | 0.668 | 0.471 | 2.727 | 0.006 | 0.008 | 0.829 |
| | 1624 | OTHR | 0.194 | -4.340 | -0.003 | -0.290 | -1.766 | 0.006 | -0.006 | 0.516 |
| | | TEMP | 12.187 | -3.970 | -0.124 | -0.867 | -4.480 | -0.001 | -0.082 | 2.817 |
| | | HYDR | 0.851 | 2.674 | 0.650 | 0.462 | 2.630 | 0.005 | 0.011 | 0.811 |
| 21 Exterior Wall @ EL-11.50 to -10.50m | 20011 | OTHR | -1.786 | -3.310 | -0.710 | 0.179 | 0.942 | 0.018 | 0.034 | 0.304 |
| | | TEMP | 3.023 | 3.384 | 0.790 | 0.274 | 1.136 | 0.041 | -0.173 | 0.330 |
| | | HYDR | 0.191 | 0.270 | 0.760 | 0.386 | 1.573 | 0.014 | 0.039 | 0.580 |
| | 20023 | OTHR | -1.159 | -1.475 | -0.593 | -0.019 | -0.237 | 0.012 | -0.056 | -0.136 |
| | | TEMP | -1.459 | -1.215 | 1.590 | 1.936 | 3.930 | 0.184 | 0.310 | 0.647 |
| | | HYDR | 0.020 | 0.657 | 0.152 | 0.101 | 0.146 | 0.015 | 0.119 | 0.091 |
| | 30010 | OTHR | -1.174 | -2.306 | -0.176 | -0.180 | -1.014 | 0.008 | 0.001 | 0.837 |
| | | TEMP | 0.421 | 2.641 | -0.135 | 1.081 | 3.585 | -0.018 | -0.024 | -0.601 |
| | | HYDR | 0.586 | 0.260 | 0.326 | 0.183 | 0.969 | 0.003 | 0.007 | 0.246 |
| | 30020 | OTHR | -0.955 | -1.661 | -0.238 | -0.553 | -0.771 | 0.023 | -0.150 | 0.328 |
| | | TEMP | -0.090 | -1.196 | -0.238 | 0.081 | 1.104 | 0.123 | -0.022 | -0.270 |
| | | HYDR | 0.044 | 0.862 | 0.222 | 0.037 | 0.180 | 0.008 | 0.062 | 0.056 |
| | 40001 | OTHR | -0.752 | -1.827 | 0.378 | -0.339 | -1.072 | -0.200 | 0.069 | 0.624 |
| | | TEMP | -0.154 | -0.831 | 0.014 | 0.123 | 1.237 | -0.081 | 0.114 | -0.310 |
| | | HYDR | 0.044 | 0.888 | 0.191 | 0.062 | 0.164 | 0.008 | 0.065 | 0.045 |
| | 40011 | OTHR | -1.363 | -3.011 | -0.029 | -0.221 | -1.366 | 0.000 | 0.005 | 1.511 |
| | | TEMP | 0.865 | 2.785 | 0.044 | 1.075 | 3.674 | 0.007 | 0.012 | -0.638 |
| | | HYDR | 0.433 | 0.497 | 0.386 | 0.121 | 0.626 | 0.007 | 0.011 | 0.150 |

## Table 3G.1-46 Combined Forces and Moments: RB, Selected Load Combination RB-8a (Continued)

| Location | Element ID | | Nx (MN/m) | Ny (MN/m) | Nxy (MN/m) | Mx (MNm/m) | My (MNm/m) | Mxy (MNm/m) | Qx (MN/m) | Qy (MN/m) |
|---|---|---|---|---|---|---|---|---|---|---|
| 22 Exterior Wall @ EL4.65 to 6.60m | 22011 | OTHR | 0.233 | -2.716 | 0.620 | -0.004 | 0.110 | 0.013 | -0.025 | 0.152 |
| | | TEMP | 3.577 | 2.789 | -0.075 | -0.128 | -0.161 | 0.049 | 0.032 | -0.031 |
| | | HYDR | 0.300 | 1.068 | 0.853 | 0.018 | 0.123 | 0.027 | 0.004 | 0.227 |
| | 22023 | OTHR | -0.055 | -1.615 | -0.034 | 0.086 | 0.042 | -0.074 | 0.041 | 0.008 |
| | | TEMP | 1.984 | -3.558 | -1.991 | 0.092 | 0.423 | -0.047 | 0.570 | 0.405 |
| | | HYDR | 0.070 | 0.603 | 0.422 | 0.133 | 0.046 | 0.037 | 0.042 | 0.015 |
| | 32010 | OTHR | 0.202 | -1.854 | 0.031 | -0.019 | 0.017 | 0.007 | 0.000 | -0.100 |
| | | TEMP | 14.408 | 6.124 | 0.009 | -2.798 | -2.759 | 0.004 | -0.008 | 0.040 |
| | | HYDR | 0.358 | 0.431 | 0.446 | 0.022 | 0.052 | 0.005 | 0.001 | 0.137 |
| | 32020 | OTHR | 0.003 | -1.874 | 0.226 | 0.001 | -0.029 | -0.053 | 0.010 | 0.028 |
| | | TEMP | 0.445 | 4.720 | 2.524 | -0.285 | -1.833 | -0.377 | 0.922 | 0.167 |
| | | HYDR | 0.038 | 0.558 | 0.293 | 0.087 | 0.009 | 0.016 | 0.066 | 0.007 |
| | 42001 | OTHR | 0.000 | -1.916 | 0.109 | 0.026 | -0.061 | 0.059 | -0.009 | 0.049 |
| | | TEMP | 2.451 | 3.607 | 2.534 | -0.371 | -1.611 | -0.058 | -0.794 | -0.254 |
| | | HYDR | 0.066 | 0.583 | 0.326 | 0.112 | 0.010 | 0.011 | 0.045 | 0.003 |
| | 42011 | OTHR | -0.114 | -2.144 | -0.031 | -0.040 | -0.091 | -0.005 | 0.004 | -0.064 |
| | | TEMP | 12.432 | 4.405 | 0.143 | -2.975 | -2.774 | 0.081 | 0.081 | 0.172 |
| | | HYDR | 0.217 | 0.756 | 0.529 | 0.042 | 0.042 | 0.012 | 0.006 | 0.127 |
| 23 Exterior Wall @ EL22.50 to 24.60m | 24211 | OTHR | 0.324 | -1.466 | 0.070 | 0.004 | -0.052 | 0.015 | 0.006 | -0.290 |
| | | TEMP | 4.177 | 2.901 | -0.313 | 0.092 | 0.628 | 0.014 | -0.122 | 1.431 |
| | | HYDR | 0.203 | 0.688 | 0.418 | 0.044 | 0.187 | 0.021 | 0.003 | 0.217 |
| | 24224 | OTHR | -0.016 | -1.468 | 0.150 | 0.035 | 0.002 | -0.018 | -0.037 | -0.012 |
| | | TEMP | 0.340 | 4.642 | -3.562 | 0.871 | -0.344 | -0.446 | -0.824 | -0.417 |
| | | HYDR | 0.034 | 0.693 | 0.342 | 0.139 | 0.094 | 0.035 | 0.068 | 0.098 |
| | 34210 | OTHR | 0.601 | -0.717 | 0.071 | 0.010 | 0.179 | 0.001 | 0.000 | 0.056 |
| | | TEMP | 15.323 | 4.794 | -0.317 | -2.778 | -2.409 | 0.015 | -0.011 | 0.104 |
| | | HYDR | 0.297 | 0.145 | 0.251 | 0.021 | 0.109 | 0.013 | 0.002 | 0.057 |
| | 34220 | OTHR | 0.081 | -1.341 | 0.032 | 0.065 | 0.029 | -0.010 | 0.043 | -0.002 |
| | | TEMP | 1.721 | 4.437 | 2.297 | 0.980 | -1.464 | -0.240 | 1.609 | 0.013 |
| | | HYDR | 0.041 | 0.329 | 0.143 | 0.053 | 0.021 | 0.025 | 0.034 | 0.010 |
| | 44201 | OTHR | 0.037 | -1.392 | -0.034 | 0.071 | 0.029 | 0.005 | -0.044 | -0.009 |
| | | TEMP | 1.001 | 5.209 | 0.300 | 0.668 | -1.698 | 0.337 | -1.911 | 0.044 |
| | | HYDR | 0.037 | 0.398 | 0.239 | 0.049 | 0.008 | 0.005 | 0.035 | 0.006 |
| 24 Basemat @ Wall Below RCCV | 90140 | OTHR | -3.168 | -2.596 | 0.278 | -0.739 | -0.164 | 1.099 | -1.859 | 1.601 |
| | | TEMP | 1.052 | 1.448 | 1.374 | 0.756 | -0.217 | -0.971 | -0.682 | -0.069 |
| | | HYDR | 0.719 | 0.518 | 0.569 | 1.410 | 0.998 | 0.310 | 1.000 | 1.030 |
| | 90182 | OTHR | -2.239 | -2.512 | -0.058 | 0.075 | -0.489 | 0.035 | 0.037 | 0.409 |
| | | TEMP | 1.619 | 0.481 | 0.610 | -0.246 | -3.861 | 0.184 | -0.141 | 2.769 |
| | | HYDR | 1.338 | 0.255 | 0.263 | 0.800 | 0.527 | 0.217 | 0.279 | 1.123 |
| | 90111 | OTHR | -3.892 | -2.310 | -0.036 | -1.081 | 0.058 | -0.141 | 0.089 | 0.109 |
| | | TEMP | 0.567 | 2.209 | -0.001 | -4.129 | -0.522 | 0.050 | 2.860 | 0.127 |
| | | HYDR | 0.202 | 1.158 | 0.073 | 0.385 | 0.640 | 0.171 | 1.039 | 0.271 |

## Table 3G.1-46 Combined Forces and Moments: RB, Selected Load Combination RB-8a (Continued)

| Location | Element ID | | Nx (MN/m) | Ny (MN/m) | Nxy (MN/m) | Mx (MNm/m) | My (MNm/m) | Mxy (MNm/m) | Qx (MN/m) | Qy (MN/m) |
|---|---|---|---|---|---|---|---|---|---|---|
| 25 Slab EL4.65m @ RCCV | 93140 | OTHR | -0.327 | 0.108 | 0.280 | 0.113 | 0.122 | -0.102 | 0.131 | -0.111 |
| | | TEMP | -0.669 | 2.312 | 4.286 | -0.515 | -0.395 | 0.287 | -0.135 | 0.111 |
| | | HYDR | 0.264 | 0.274 | 0.326 | 0.053 | 0.039 | 0.052 | 0.015 | 0.018 |
| | 93182 | OTHR | 0.221 | -0.129 | 0.016 | 0.007 | 0.086 | 0.007 | -0.004 | -0.041 |
| | | TEMP | 4.229 | -4.036 | -1.098 | -0.354 | -1.829 | -0.083 | 0.075 | 1.370 |
| | | HYDR | 0.401 | 0.097 | 0.114 | 0.036 | 0.061 | 0.006 | 0.007 | 0.153 |
| | 93111 | OTHR | -0.167 | 0.330 | -0.029 | 0.044 | -0.003 | -0.001 | -0.008 | -0.006 |
| | | TEMP | -3.602 | 4.956 | -0.257 | -1.768 | -0.316 | -0.047 | 1.178 | 0.000 |
| | | HYDR | 0.096 | 0.435 | 0.096 | 0.019 | 0.029 | 0.003 | 0.093 | 0.003 |
| 26 Slab EL17.5m @ RCCV | 96144 | OTHR | 0.039 | 0.607 | 0.775 | 0.148 | 0.150 | -0.116 | 0.140 | -0.122 |
| | | TEMP | -0.269 | 4.712 | 6.965 | -0.230 | -0.125 | 0.167 | -0.073 | 0.023 |
| | | HYDR | 0.081 | 0.029 | 0.338 | 0.099 | 0.082 | 0.050 | 0.019 | 0.021 |
| | 96186 | OTHR | 1.005 | -0.419 | -0.109 | 0.008 | 0.091 | 0.001 | -0.004 | -0.109 |
| | | TEMP | 6.688 | -4.125 | -1.418 | -0.091 | -0.316 | -0.048 | 0.016 | 0.347 |
| | | HYDR | 0.259 | 0.142 | 0.173 | 0.049 | 0.232 | 0.009 | 0.011 | 0.187 |
| | 96113 | OTHR | -0.524 | 1.558 | -0.150 | 0.293 | 0.072 | -0.007 | -0.066 | 0.008 |
| | | TEMP | -8.342 | 2.574 | -1.682 | -4.481 | -2.783 | -0.199 | 1.240 | -0.059 |
| | | HYDR | 0.076 | 0.484 | 0.282 | 0.349 | 0.083 | 0.012 | 0.268 | 0.029 |
| 27 Slab EL27.0m @ RCCV | 98472 | OTHR | 0.517 | 0.595 | -0.132 | 0.068 | 0.087 | -0.045 | 0.237 | -0.244 |
| | | TEMP | -0.778 | -0.772 | 5.392 | -0.313 | 0.031 | -0.311 | 0.451 | -0.561 |
| | | HYDR | 0.140 | 0.069 | 0.211 | 0.086 | 0.112 | 0.056 | 0.069 | 0.071 |
| | 98514 | OTHR | 0.257 | 0.518 | 0.031 | -0.012 | -0.205 | 0.002 | 0.004 | -0.135 |
| | | TEMP | 0.436 | -2.393 | -1.392 | -0.533 | -0.070 | -0.005 | 0.036 | -0.726 |
| | | HYDR | 0.250 | 0.113 | 0.251 | 0.039 | 0.185 | 0.005 | 0.003 | 0.158 |
| | 98424 | OTHR | -0.262 | 1.552 | -0.068 | 0.065 | 0.169 | -0.132 | -0.587 | -0.047 |
| | | TEMP | -9.063 | -6.855 | -1.452 | 1.316 | -0.418 | 0.194 | -5.559 | -0.101 |
| | | HYDR | 0.068 | 0.218 | 0.135 | 0.326 | 0.135 | 0.021 | 0.220 | 0.014 |
| 28 Pool Girder @ Storage Pool | 123054 | OTHR | 0.268 | 0.703 | 1.298 | 0.073 | 0.021 | -0.126 | -0.045 | -0.065 |
| | | TEMP | 1.314 | -2.832 | 1.430 | 2.281 | 2.120 | 0.027 | -0.232 | 0.482 |
| | | HYDR | 0.169 | 0.213 | 0.180 | 0.014 | 0.011 | 0.008 | 0.016 | 0.018 |
| | 123154 | OTHR | 0.276 | -0.021 | 1.151 | 0.087 | 0.039 | -0.138 | -0.070 | 0.025 |
| | | TEMP | 1.031 | 0.747 | -0.407 | 1.925 | 1.145 | -0.338 | -0.086 | 0.247 |
| | | HYDR | 0.305 | 0.042 | 0.174 | 0.020 | 0.013 | 0.023 | 0.009 | 0.001 |
| 29 Pool Girder @ Well | 123062 | OTHR | 0.376 | -1.081 | -1.271 | -0.027 | 0.143 | 0.004 | 0.072 | 0.130 |
| | | TEMP | -1.254 | -0.148 | -0.719 | 0.101 | 0.323 | 0.027 | 0.057 | 0.172 |
| | | HYDR | 0.185 | 0.022 | 0.140 | 0.013 | 0.016 | 0.006 | 0.007 | 0.004 |
| | 123162 | OTHR | 1.993 | -0.346 | -0.961 | 0.017 | -0.013 | -0.003 | -0.004 | -0.034 |
| | | TEMP | -1.691 | -0.032 | -0.470 | 0.128 | -0.117 | -0.003 | -0.151 | 0.085 |
| | | HYDR | 0.453 | 0.019 | 0.133 | 0.024 | 0.015 | 0.004 | 0.016 | 0.004 |
| 30 Pool Girder @ Buffer Pool | 123067 | OTHR | 0.264 | 0.977 | -1.244 | -0.043 | -0.084 | 0.012 | -0.059 | -0.050 |
| | | TEMP | -2.405 | -6.001 | -1.842 | 0.639 | 0.439 | -0.117 | -0.150 | 0.470 |
| | | HYDR | 0.176 | 1.073 | 0.411 | 0.030 | 0.029 | 0.012 | 0.024 | 0.030 |
| | 123167 | OTHR | -0.163 | 0.197 | -1.252 | -0.003 | -0.053 | 0.030 | -0.088 | -0.002 |
| | | TEMP | -2.204 | -2.669 | -2.246 | 0.268 | -0.449 | -0.228 | -0.011 | 0.180 |
| | | HYDR | 0.478 | 0.311 | 0.449 | 0.019 | 0.008 | 0.008 | 0.012 | 0.005 |
| 31 MS Tunnel Wall and Slab | 150122 | OTHR | 0.037 | -0.290 | 0.365 | 0.020 | 0.098 | 0.014 | -0.006 | -0.067 |
| | | TEMP | 0.224 | -0.515 | 1.901 | 1.053 | 3.140 | -0.007 | -0.584 | 0.364 |
| | | HYDR | 0.018 | 0.056 | 0.006 | 0.008 | 0.033 | 0.006 | 0.002 | 0.021 |
| | 96611 | OTHR | -0.050 | 0.725 | -0.045 | 0.053 | -0.095 | -0.054 | -0.069 | 0.018 |
| | | TEMP | -0.447 | 4.103 | -0.332 | -1.287 | -7.109 | -0.423 | 0.426 | 0.209 |
| | | HYDR | 0.009 | 0.075 | 0.012 | 0.044 | 0.101 | 0.018 | 0.015 | 0.008 |
| | 98614 | OTHR | -0.010 | -0.347 | -0.011 | -0.199 | -1.002 | -0.138 | 0.009 | 0.053 |
| | | TEMP | -0.187 | 1.989 | -0.145 | -0.861 | -10.477 | -0.011 | 0.470 | 0.303 |
| | | HYDR | 0.006 | 0.115 | 0.007 | 0.005 | 0.056 | 0.009 | 0.001 | 0.010 |

*OTHR: Loads other than thermal loads*
*TEMP: Thermal loads*
*SI to U.S. Customary units conversion (SI units are the controlling units and U.S. Customary units are for reference only):*
*1 MN/m = $6.852 \times 10^4$ lbf/ft*
*1 MNm/m = $2.248 \times 10^5$ lbf-ft/ft*

## Table 3G.1-47 Combined Forces and Moments: RB, Selected Load Combination RB-8b

| Location | Element ID | | Nx (MN/m) | Ny (MN/m) | Nxy (MN/m) | Mx (MNm/m) | My (MNm/m) | Mxy (MNm/m) | Qx (MN/m) | Qy (MN/m) |
|---|---|---|---|---|---|---|---|---|---|---|
| 18 Wall Below RCCV Bottom | 6 | OTHR | -1.631 | -5.735 | -0.321 | 0.092 | 0.247 | -0.007 | 0.007 | 0.196 |
| | | TEMP | 0.745 | -0.977 | -0.895 | 0.238 | 1.920 | -0.053 | 0.044 | 0.293 |
| | | HYDR | 0.772 | 1.667 | 0.389 | 0.220 | 1.254 | 0.003 | 0.011 | 0.440 |
| | 13 | OTHR | -1.520 | -4.338 | -0.020 | -0.201 | -0.940 | 0.006 | -0.005 | -0.213 |
| | | TEMP | -0.174 | -4.065 | -0.782 | 0.604 | 3.357 | -0.002 | 0.023 | 0.785 |
| | | HYDR | 0.611 | 1.684 | 0.393 | 0.167 | 0.980 | 0.004 | 0.008 | 0.338 |
| | 24 | OTHR | -1.401 | -4.693 | -0.140 | -0.240 | -1.491 | -0.002 | 0.003 | -0.524 |
| | | TEMP | 0.101 | -3.765 | 0.212 | 0.594 | 3.314 | -0.007 | -0.003 | 0.779 |
| | | HYDR | 0.664 | 1.845 | 0.387 | 0.123 | 0.766 | 0.004 | 0.007 | 0.271 |
| 19 Wall Below RCCV Mid-Height | 806 | OTHR | -1.071 | -4.540 | -0.256 | 0.015 | 0.091 | -0.017 | -0.015 | -0.060 |
| | | TEMP | 1.907 | -2.149 | 0.225 | 0.307 | 1.688 | 0.090 | -0.068 | -0.082 |
| | | HYDR | 0.214 | 1.640 | 0.518 | 0.017 | 0.091 | 0.024 | 0.003 | 0.027 |
| | 813 | OTHR | -1.453 | -4.313 | 0.130 | -0.007 | 0.170 | -0.004 | 0.007 | -0.004 |
| | | TEMP | 1.360 | -3.986 | -0.566 | 0.221 | 1.702 | -0.034 | 0.006 | 0.602 |
| | | HYDR | 0.164 | 1.703 | 0.531 | 0.023 | 0.089 | 0.010 | 0.003 | 0.080 |
| | 824 | OTHR | -1.751 | -4.549 | -0.033 | 0.117 | 0.442 | 0.010 | -0.002 | 0.128 |
| | | TEMP | 1.151 | -3.732 | 0.198 | 0.224 | 1.729 | 0.027 | 0.015 | 0.502 |
| | | HYDR | 0.175 | 1.868 | 0.508 | 0.012 | 0.095 | 0.013 | 0.001 | 0.050 |
| 20 Wall Below RCCV Top | 1606 | OTHR | 0.209 | -3.939 | -0.136 | -0.299 | -1.735 | 0.024 | 0.006 | 0.436 |
| | | TEMP | 15.858 | -3.114 | 0.381 | -0.839 | -4.009 | 0.124 | 0.101 | 3.042 |
| | | HYDR | 0.627 | 1.658 | 0.505 | 0.343 | 1.917 | 0.009 | 0.006 | 0.564 |
| | 1613 | OTHR | 0.015 | -4.292 | 0.232 | -0.329 | -1.754 | -0.004 | -0.003 | 0.474 |
| | | TEMP | 15.713 | -4.649 | -0.420 | -1.005 | -5.538 | -0.011 | -0.016 | 3.612 |
| | | HYDR | 0.620 | 1.694 | 0.502 | 0.340 | 1.957 | 0.004 | 0.008 | 0.601 |
| | 1624 | OTHR | 0.444 | -4.077 | 0.005 | -0.366 | -2.207 | 0.007 | -0.006 | 0.660 |
| | | TEMP | 16.688 | -4.842 | -0.107 | -1.115 | -5.549 | 0.001 | -0.106 | 3.698 |
| | | HYDR | 0.683 | 1.834 | 0.505 | 0.336 | 1.898 | 0.003 | 0.010 | 0.592 |
| 21 Exterior Wall @ EL-11.50 to -10.50m | 20011 | OTHR | -1.766 | -3.208 | -0.705 | 0.204 | 1.035 | 0.020 | 0.031 | 0.333 |
| | | TEMP | 3.314 | 4.817 | 0.922 | 0.447 | 1.837 | 0.052 | -0.225 | 0.576 |
| | | HYDR | 0.135 | 0.207 | 0.589 | 0.279 | 1.135 | 0.010 | 0.029 | 0.418 |
| | 20023 | OTHR | -1.158 | -1.481 | -0.603 | -0.026 | -0.230 | 0.012 | -0.055 | -0.133 |
| | | TEMP | -1.453 | -1.169 | 1.549 | 1.890 | 4.020 | 0.180 | 0.322 | 0.683 |
| | | HYDR | 0.016 | 0.467 | 0.114 | 0.074 | 0.109 | 0.011 | 0.091 | 0.068 |
| | 30010 | OTHR | -1.132 | -2.283 | -0.179 | -0.146 | -0.849 | 0.007 | 0.001 | 0.801 |
| | | TEMP | 0.688 | 3.733 | -0.258 | 1.289 | 4.763 | -0.022 | -0.031 | -0.865 |
| | | HYDR | 0.416 | 0.191 | 0.261 | 0.135 | 0.710 | 0.003 | 0.006 | 0.180 |
| | 30020 | OTHR | -0.944 | -1.700 | -0.244 | -0.566 | -0.765 | 0.026 | -0.147 | 0.327 |
| | | TEMP | -0.058 | -1.477 | -0.392 | 0.021 | 1.209 | 0.144 | -0.026 | -0.282 |
| | | HYDR | 0.034 | 0.601 | 0.161 | 0.028 | 0.126 | 0.006 | 0.045 | 0.038 |
| | 40001 | OTHR | -0.747 | -1.860 | 0.398 | -0.351 | -1.058 | -0.203 | 0.069 | 0.622 |
| | | TEMP | -0.090 | -1.141 | 0.056 | 0.039 | 1.330 | -0.097 | 0.105 | -0.322 |
| | | HYDR | 0.034 | 0.620 | 0.140 | 0.046 | 0.114 | 0.006 | 0.047 | 0.031 |
| | 40011 | OTHR | -1.362 | -2.969 | -0.028 | -0.185 | -1.183 | 0.002 | 0.005 | 1.471 |
| | | TEMP | 1.295 | 3.630 | 0.051 | 1.243 | 4.654 | 0.011 | 0.015 | -0.844 |
| | | HYDR | 0.324 | 0.343 | 0.301 | 0.092 | 0.471 | 0.005 | 0.008 | 0.113 |

## Table 3G.1-47 Combined Forces and Moments: RB, Selected Load Combination RB-8b (Continued)

| Location | Element ID | | Nx (MN/m) | Ny (MN/m) | Nxy (MN/m) | Mx (MNm/m) | My (MNm/m) | Mxy (MNm/m) | Qx (MN/m) | Qy (MN/m) |
|---|---|---|---|---|---|---|---|---|---|---|
| 22 Exterior Wall @ EL4.65 to 6.60m | 22011 | OTHR | 0.340 | -2.632 | 0.601 | -0.004 | 0.124 | 0.014 | -0.027 | 0.173 |
| | | TEMP | 5.080 | 4.474 | -0.209 | -0.175 | -0.228 | 0.067 | 0.045 | 0.074 |
| | | HYDR | 0.227 | 0.763 | 0.623 | 0.012 | 0.082 | 0.020 | 0.003 | 0.156 |
| | 22023 | OTHR | -0.043 | -1.598 | -0.021 | 0.116 | 0.050 | -0.081 | 0.032 | 0.007 |
| | | TEMP | 2.211 | -3.114 | -2.141 | 0.528 | 0.492 | -0.052 | 0.386 | 0.393 |
| | | HYDR | 0.050 | 0.414 | 0.306 | 0.106 | 0.032 | 0.026 | 0.029 | 0.011 |
| | 32010 | OTHR | 0.335 | -1.829 | 0.025 | -0.020 | 0.035 | 0.009 | 0.000 | -0.128 |
| | | TEMP | 16.739 | 7.724 | -0.075 | -2.893 | -3.003 | -0.001 | -0.014 | 0.022 |
| | | HYDR | 0.268 | 0.301 | 0.334 | 0.019 | 0.042 | 0.004 | 0.001 | 0.100 |
| | 32020 | OTHR | 0.015 | -1.847 | 0.282 | 0.025 | -0.021 | -0.065 | 0.026 | 0.031 |
| | | TEMP | 0.653 | 4.869 | 2.518 | 0.104 | -1.860 | -0.395 | 1.226 | 0.199 |
| | | HYDR | 0.030 | 0.375 | 0.221 | 0.070 | 0.007 | 0.013 | 0.052 | 0.005 |
| | 42001 | OTHR | 0.014 | -1.879 | 0.136 | 0.057 | -0.054 | 0.063 | -0.020 | 0.051 |
| | | TEMP | 2.720 | 3.801 | 2.644 | 0.130 | -1.563 | -0.051 | -0.998 | -0.239 |
| | | HYDR | 0.050 | 0.394 | 0.243 | 0.090 | 0.007 | 0.009 | 0.036 | 0.002 |
| | 42011 | OTHR | -0.005 | -2.050 | -0.021 | -0.044 | -0.083 | -0.007 | 0.004 | -0.089 |
| | | TEMP | 14.110 | 5.515 | 0.234 | -3.164 | -3.046 | 0.073 | 0.090 | 0.169 |
| | | HYDR | 0.174 | 0.524 | 0.390 | 0.035 | 0.041 | 0.009 | 0.005 | 0.100 |
| 23 Exterior Wall @ EL22.50 to 24.60m | 24211 | OTHR | 0.447 | -1.379 | 0.064 | 0.021 | 0.047 | 0.017 | 0.008 | -0.340 |
| | | TEMP | 6.073 | 5.669 | -0.239 | 0.176 | 0.982 | 0.008 | -0.147 | 1.336 |
| | | HYDR | 0.139 | 0.484 | 0.307 | 0.030 | 0.133 | 0.015 | 0.003 | 0.151 |
| | 24224 | OTHR | -0.012 | -1.537 | 0.106 | 0.031 | 0.010 | -0.012 | -0.028 | -0.010 |
| | | TEMP | 1.011 | 5.349 | -3.664 | 1.966 | 0.071 | -0.637 | -1.563 | -0.323 |
| | | HYDR | 0.024 | 0.484 | 0.237 | 0.097 | 0.065 | 0.024 | 0.049 | 0.069 |
| | 34210 | OTHR | 0.731 | -0.690 | 0.073 | 0.008 | 0.207 | 0.000 | 0.000 | 0.065 |
| | | TEMP | 21.813 | 5.545 | -0.581 | -2.903 | -2.819 | 0.035 | -0.002 | -0.128 |
| | | HYDR | 0.213 | 0.101 | 0.181 | 0.014 | 0.075 | 0.009 | 0.001 | 0.040 |
| | 34220 | OTHR | 0.086 | -1.422 | 0.070 | 0.066 | 0.041 | -0.008 | 0.043 | -0.004 |
| | | TEMP | 2.794 | 5.432 | 4.414 | 2.629 | -1.178 | -0.711 | 2.571 | 0.094 |
| | | HYDR | 0.028 | 0.230 | 0.103 | 0.036 | 0.015 | 0.017 | 0.022 | 0.007 |
| | 44201 | OTHR | 0.038 | -1.448 | 0.031 | 0.076 | 0.038 | 0.002 | -0.042 | -0.011 |
| | | TEMP | 1.793 | 6.586 | 0.562 | 2.230 | -1.491 | 0.539 | -2.967 | 0.044 |
| | | HYDR | 0.026 | 0.278 | 0.167 | 0.034 | 0.005 | 0.003 | 0.024 | 0.004 |
| 24 Basemat @ Wall Below RCCV | 90140 | OTHR | -3.176 | -2.551 | 0.358 | -0.497 | 0.031 | 0.785 | -1.841 | 1.550 |
| | | TEMP | 0.838 | 1.691 | 1.751 | -0.171 | -1.046 | -1.095 | -1.135 | 0.139 |
| | | HYDR | 0.511 | 0.380 | 0.435 | 1.016 | 0.711 | 0.265 | 0.709 | 0.729 |
| | 90182 | OTHR | -2.073 | -2.496 | -0.063 | -0.026 | -0.141 | 0.077 | 0.030 | 0.391 |
| | | TEMP | 1.908 | 0.687 | 0.488 | -0.873 | -5.527 | 0.260 | -0.110 | 3.825 |
| | | HYDR | 0.956 | 0.181 | 0.195 | 0.570 | 0.440 | 0.179 | 0.209 | 0.795 |
| | 90111 | OTHR | -3.872 | -2.223 | -0.046 | -0.736 | -0.032 | -0.093 | 0.071 | 0.105 |
| | | TEMP | 0.733 | 2.908 | -0.011 | -5.322 | -1.147 | 0.107 | 3.687 | 0.151 |
| | | HYDR | 0.135 | 0.851 | 0.058 | 0.342 | 0.458 | 0.143 | 0.736 | 0.209 |

## Table 3G.1-47 Combined Forces and Moments: RB, Selected Load Combination RB-8b (Continued)

| Location | Element ID | | Nx (MN/m) | Ny (MN/m) | Nxy (MN/m) | Mx (MNm/m) | My (MNm/m) | Mxy (MNm/m) | Qx (MN/m) | Qy (MN/m) |
|---|---|---|---|---|---|---|---|---|---|---|
| 25 Slab EL4.65m @ RCCV | 93140 | OTHR | -0.300 | 0.152 | 0.319 | 0.125 | 0.131 | -0.112 | 0.132 | -0.113 |
| | | TEMP | -0.383 | 3.018 | 5.804 | -0.739 | -0.564 | 0.413 | -0.192 | 0.163 |
| | | HYDR | 0.199 | 0.202 | 0.263 | 0.038 | 0.028 | 0.035 | 0.011 | 0.013 |
| | 93182 | OTHR | 0.300 | -0.111 | 0.012 | 0.005 | 0.101 | 0.008 | -0.003 | -0.033 |
| | | TEMP | 6.161 | -5.154 | -1.518 | -0.481 | -2.508 | -0.114 | 0.105 | 1.903 |
| | | HYDR | 0.304 | 0.089 | 0.090 | 0.026 | 0.045 | 0.004 | 0.005 | 0.109 |
| | 93111 | OTHR | -0.149 | 0.400 | -0.042 | 0.061 | -0.004 | -0.001 | -0.005 | -0.006 |
| | | TEMP | -4.494 | 6.820 | -0.448 | -2.369 | -0.414 | -0.066 | 1.594 | 0.001 |
| | | HYDR | 0.094 | 0.336 | 0.073 | 0.014 | 0.021 | 0.002 | 0.067 | 0.002 |
| 26 Slab EL17.5m @ RCCV | 96144 | OTHR | 0.063 | 0.731 | 0.907 | 0.168 | 0.163 | -0.128 | 0.144 | -0.126 |
| | | TEMP | 0.733 | 5.839 | 8.138 | -0.232 | -0.178 | 0.174 | -0.043 | 0.066 |
| | | HYDR | 0.059 | 0.024 | 0.247 | 0.068 | 0.056 | 0.034 | 0.013 | 0.015 |
| | 96186 | OTHR | 1.180 | -0.491 | -0.143 | 0.013 | 0.118 | 0.004 | -0.005 | -0.132 |
| | | TEMP | 9.999 | -4.559 | -2.165 | -0.150 | -0.675 | -0.057 | 0.023 | 0.638 |
| | | HYDR | 0.185 | 0.103 | 0.126 | 0.034 | 0.159 | 0.006 | 0.008 | 0.128 |
| | 96113 | OTHR | -0.634 | 1.795 | -0.198 | 0.378 | 0.087 | 0.004 | -0.133 | 0.003 |
| | | TEMP | -9.165 | 5.149 | -1.811 | -4.378 | -2.755 | -0.237 | 1.010 | -0.100 |
| | | HYDR | 0.059 | 0.334 | 0.201 | 0.240 | 0.058 | 0.009 | 0.185 | 0.020 |
| 27 Slab EL27.0m @ RCCV | 98472 | OTHR | See Tables 3G.5-13 to 3G.5-16 | | | | | | | |
| | | TEMP | | | | | | | | |
| | | HYDR | | | | | | | | |
| | 98514 | OTHR | | | | | | | | |
| | | TEMP | | | | | | | | |
| | | HYDR | | | | | | | | |
| | 98424 | OTHR | | | | | | | | |
| | | TEMP | | | | | | | | |
| | | HYDR | | | | | | | | |
| 28 Pool Girder @ Storage Pool | 123054 | OTHR | | | | | | | | |
| | | TEMP | | | | | | | | |
| | | HYDR | | | | | | | | |
| | 123154 | OTHR | | | | | | | | |
| | | TEMP | | | | | | | | |
| | | HYDR | | | | | | | | |
| 29 Pool Girder @ Well | 123062 | OTHR | | | | | | | | |
| | | TEMP | | | | | | | | |
| | | HYDR | | | | | | | | |
| | 123162 | OTHR | | | | | | | | |
| | | TEMP | | | | | | | | |
| | | HYDR | | | | | | | | |
| 30 Pool Girder @ Buffer Pool | 123067 | OTHR | | | | | | | | |
| | | TEMP | | | | | | | | |
| | | HYDR | | | | | | | | |
| | 123167 | OTHR | | | | | | | | |
| | | TEMP | | | | | | | | |
| | | HYDR | | | | | | | | |
| 31 MS Tunnel Wall and Slab | 150122 | OTHR | 0.049 | -0.354 | 0.381 | 0.019 | 0.106 | 0.014 | -0.005 | -0.072 |
| | | TEMP | 0.316 | -0.711 | 1.797 | 0.940 | 3.101 | 0.011 | -0.551 | 0.426 |
| | | HYDR | 0.012 | 0.039 | 0.004 | 0.006 | 0.024 | 0.004 | 0.002 | 0.014 |
| | 96611 | OTHR | -0.060 | 0.825 | -0.053 | 0.048 | -0.107 | -0.055 | -0.067 | 0.019 |
| | | TEMP | -0.557 | 4.662 | -0.414 | -1.254 | -7.116 | -0.406 | 0.420 | 0.206 |
| | | HYDR | 0.007 | 0.052 | 0.008 | 0.031 | 0.072 | 0.013 | 0.011 | 0.005 |
| | 98614 | OTHR | -0.008 | -0.383 | -0.010 | -0.242 | -1.096 | -0.153 | 0.022 | 0.057 |
| | | TEMP | -0.043 | 0.725 | -0.043 | -0.850 | -9.922 | -0.018 | 0.459 | 0.307 |
| | | HYDR | 0.004 | 0.081 | 0.005 | 0.004 | 0.040 | 0.006 | 0.001 | 0.007 |

*OTHR: Loads other than thermal loads*
*TEMP: Thermal loads*
*SI to U.S. Customary units conversion (SI units are the controlling units and U.S. Customary units are for reference only):*
*1 MN/m = $6.852 \times 10^4$ lbf/ft*
*1 MNm/m = $2.248 \times 10^5$ lbf-ft/ft*

## Table 3G.1-48 Combined Forces and Moments: RB, Selected Load Combination RB-9a

| Location | Element ID | | Nx (MN/m) | Ny (MN/m) | Nxy (MN/m) | Mx (MNm/m) | My (MNm/m) | Mxy (MNm/m) | Qx (MN/m) | Qy (MN/m) |
|---|---|---|---|---|---|---|---|---|---|---|
| 18 Wall Below RCCV Bottom | 6 | OTHR | -1.406 | -6.404 | -0.192 | -0.045 | -0.553 | -0.005 | 0.000 | -0.066 |
| | | TEMP | 1.177 | -0.473 | -0.669 | 0.101 | 1.063 | -0.040 | 0.024 | 0.044 |
| | | SEIS | 6.696 | 12.988 | 5.722 | 1.271 | 7.124 | 0.093 | 0.215 | 2.708 |
| | | HYDR | 0.730 | 1.683 | 0.349 | 0.209 | 1.193 | 0.003 | 0.010 | 0.417 |
| | 13 | OTHR | -1.338 | -4.900 | 0.016 | -0.351 | -1.786 | 0.006 | -0.005 | -0.474 |
| | | TEMP | 0.307 | -3.027 | -0.689 | 0.408 | 2.284 | -0.002 | 0.019 | 0.475 |
| | | SEIS | 5.186 | 11.839 | 4.076 | 0.918 | 5.398 | 0.059 | 0.107 | 2.066 |
| | | HYDR | 0.582 | 1.701 | 0.362 | 0.158 | 0.930 | 0.004 | 0.008 | 0.321 |
| | 24 | OTHR | -1.135 | -5.340 | -0.164 | -0.396 | -2.378 | -0.001 | 0.002 | -0.800 |
| | | TEMP | 0.412 | -3.041 | 0.146 | 0.425 | 2.350 | -0.005 | -0.002 | 0.516 |
| | | SEIS | 3.487 | 9.762 | 6.470 | 0.650 | 3.735 | 0.101 | 0.148 | 1.099 |
| | | HYDR | 0.638 | 1.871 | 0.334 | 0.114 | 0.717 | 0.003 | 0.007 | 0.254 |
| 19 Wall Below RCCV Mid-Height | 806 | OTHR | -1.130 | -5.219 | -0.166 | 0.007 | 0.032 | -0.022 | -0.013 | -0.077 |
| | | TEMP | 1.601 | -1.332 | 0.182 | 0.235 | 1.292 | 0.083 | -0.053 | -0.063 |
| | | SEIS | 3.208 | 10.327 | 6.462 | 0.129 | 0.397 | 0.170 | 0.078 | 0.256 |
| | | HYDR | 0.209 | 1.673 | 0.467 | 0.016 | 0.090 | 0.022 | 0.003 | 0.026 |
| | 813 | OTHR | -1.536 | -4.820 | 0.155 | -0.021 | 0.106 | -0.007 | 0.001 | -0.048 |
| | | TEMP | 1.036 | -2.990 | -0.508 | 0.175 | 1.290 | -0.027 | 0.006 | 0.450 |
| | | SEIS | 3.060 | 10.805 | 4.961 | 0.145 | 0.684 | 0.059 | 0.026 | 0.379 |
| | | HYDR | 0.162 | 1.735 | 0.485 | 0.023 | 0.089 | 0.007 | 0.002 | 0.076 |
| | 824 | OTHR | -1.799 | -5.229 | -0.062 | 0.101 | 0.391 | 0.009 | -0.001 | 0.085 |
| | | TEMP | 0.890 | -3.046 | 0.126 | 0.176 | 1.306 | 0.019 | 0.010 | 0.396 |
| | | SEIS | 2.262 | 9.222 | 7.635 | 0.223 | 0.611 | 0.100 | 0.051 | 0.267 |
| | | HYDR | 0.180 | 1.909 | 0.438 | 0.013 | 0.095 | 0.010 | 0.001 | 0.048 |
| 20 Wall Below RCCV Top | 1606 | OTHR | -0.316 | -4.589 | -0.035 | -0.132 | -0.772 | 0.024 | 0.005 | 0.141 |
| | | TEMP | 11.606 | -2.042 | 0.301 | -0.668 | -3.250 | 0.099 | 0.085 | 2.306 |
| | | SEIS | 2.070 | 7.762 | 7.056 | 0.382 | 1.853 | 0.126 | 0.026 | 0.406 |
| | | HYDR | 0.573 | 1.710 | 0.449 | 0.335 | 1.886 | 0.009 | 0.005 | 0.547 |
| | 1613 | OTHR | -0.499 | -4.706 | 0.251 | -0.158 | -0.779 | -0.002 | -0.003 | 0.157 |
| | | TEMP | 11.229 | -3.474 | -0.425 | -0.785 | -4.386 | -0.008 | -0.014 | 2.714 |
| | | SEIS | 1.432 | 8.968 | 5.015 | 0.385 | 2.293 | 0.041 | 0.017 | 0.757 |
| | | HYDR | 0.570 | 1.738 | 0.465 | 0.336 | 1.944 | 0.004 | 0.006 | 0.592 |
| | 1624 | OTHR | -0.128 | -4.778 | -0.015 | -0.190 | -1.182 | 0.006 | -0.007 | 0.328 |
| | | TEMP | 12.187 | -3.970 | -0.124 | -0.867 | -4.480 | -0.001 | -0.082 | 2.817 |
| | | SEIS | 1.370 | 7.973 | 7.604 | 0.184 | 1.264 | 0.056 | 0.047 | 0.548 |
| | | HYDR | 0.624 | 1.887 | 0.447 | 0.331 | 1.880 | 0.003 | 0.008 | 0.581 |

## Table 3G.1-48 Combined Forces and Moments: RB, Selected Load Combination RB-9a (Continued)

| Location | Element ID | | Nx (MN/m) | Ny (MN/m) | Nxy (MN/m) | Mx (MNm/m) | My (MNm/m) | Mxy (MNm/m) | Qx (MN/m) | Qy (MN/m) |
|---|---|---|---|---|---|---|---|---|---|---|
| 21 Exterior Wall @ EL-11.50 to -10.50m | 20011 | OTHR | -1.813 | -3.454 | -0.718 | 0.142 | 0.806 | 0.015 | 0.039 | 0.262 |
| | | TEMP | 3.023 | 3.384 | 0.790 | 0.274 | 1.136 | 0.041 | -0.173 | 0.330 |
| | | SEIS | 2.167 | 3.650 | 9.866 | 2.028 | 8.326 | 0.065 | 0.140 | 3.143 |
| | | HYDR | 0.134 | 0.191 | 0.521 | 0.270 | 1.101 | 0.010 | 0.028 | 0.406 |
| | 20023 | OTHR | -1.161 | -1.464 | -0.578 | -0.009 | -0.246 | 0.012 | -0.058 | -0.141 |
| | | TEMP | -1.459 | -1.215 | 1.590 | 1.936 | 3.930 | 0.184 | 0.310 | 0.647 |
| | | SEIS | 0.864 | 5.664 | 1.335 | 0.917 | 1.307 | 0.189 | 1.237 | 0.863 |
| | | HYDR | 0.014 | 0.456 | 0.106 | 0.070 | 0.102 | 0.010 | 0.083 | 0.063 |
| | 30010 | OTHR | -1.233 | -2.332 | -0.171 | -0.229 | -1.260 | 0.010 | 0.001 | 0.889 |
| | | TEMP | 0.421 | 2.641 | -0.135 | 1.081 | 3.585 | -0.018 | -0.024 | -0.601 |
| | | SEIS | 4.300 | 5.359 | 3.754 | 0.691 | 3.619 | 0.060 | 0.088 | 1.243 |
| | | HYDR | 0.411 | 0.177 | 0.226 | 0.129 | 0.686 | 0.002 | 0.005 | 0.174 |
| | 30020 | OTHR | -0.971 | -1.605 | -0.228 | -0.535 | -0.779 | 0.017 | -0.154 | 0.328 |
| | | TEMP | -0.090 | -1.196 | -0.238 | 0.081 | 1.104 | 0.123 | -0.022 | -0.270 |
| | | SEIS | 0.758 | 4.090 | 1.578 | 0.461 | 1.470 | 0.176 | 0.453 | 0.467 |
| | | HYDR | 0.030 | 0.605 | 0.155 | 0.026 | 0.126 | 0.006 | 0.044 | 0.039 |
| | 40001 | OTHR | -0.761 | -1.778 | 0.348 | -0.322 | -1.092 | -0.197 | 0.070 | 0.628 |
| | | TEMP | -0.154 | -0.831 | 0.014 | 0.123 | 1.237 | -0.081 | 0.114 | -0.310 |
| | | SEIS | 0.614 | 4.241 | 1.322 | 0.703 | 1.722 | 0.243 | 0.522 | 0.481 |
| | | HYDR | 0.030 | 0.624 | 0.134 | 0.044 | 0.114 | 0.006 | 0.045 | 0.032 |
| | 40011 | OTHR | -1.359 | -3.062 | -0.028 | -0.275 | -1.633 | -0.001 | 0.005 | 1.569 |
| | | TEMP | 0.865 | 2.785 | 0.044 | 1.075 | 3.674 | 0.007 | 0.012 | -0.638 |
| | | SEIS | 3.659 | 4.532 | 4.410 | 0.427 | 2.566 | 0.087 | 0.122 | 0.940 |
| | | HYDR | 0.301 | 0.346 | 0.268 | 0.087 | 0.448 | 0.005 | 0.007 | 0.108 |
| 22 Exterior Wall @ EL4.65 to 6.60m | 22011 | OTHR | 0.107 | -2.840 | 0.646 | -0.005 | 0.093 | 0.012 | -0.024 | 0.132 |
| | | TEMP | 3.577 | 2.789 | -0.075 | -0.128 | -0.161 | 0.049 | 0.032 | -0.031 |
| | | SEIS | 1.395 | 8.082 | 7.242 | 0.140 | 0.949 | 0.161 | 0.051 | 0.897 |
| | | HYDR | 0.217 | 0.746 | 0.584 | 0.012 | 0.084 | 0.019 | 0.003 | 0.159 |
| | 22023 | OTHR | -0.068 | -1.626 | -0.045 | 0.050 | 0.031 | -0.067 | 0.052 | 0.011 |
| | | TEMP | 1.984 | -3.558 | -1.991 | 0.092 | 0.423 | -0.047 | 0.570 | 0.405 |
| | | SEIS | 0.390 | 7.366 | 4.135 | 0.400 | 0.178 | 0.169 | 0.414 | 0.150 |
| | | HYDR | 0.049 | 0.415 | 0.288 | 0.097 | 0.032 | 0.026 | 0.029 | 0.010 |
| | 32010 | OTHR | 0.038 | -1.894 | 0.039 | -0.019 | -0.007 | 0.004 | 0.000 | -0.068 |
| | | TEMP | 14.408 | 6.124 | 0.009 | -2.798 | -2.759 | 0.004 | -0.008 | 0.040 |
| | | SEIS | 1.427 | 4.890 | 4.400 | 0.041 | 0.275 | 0.024 | 0.002 | 0.240 |
| | | HYDR | 0.256 | 0.299 | 0.303 | 0.016 | 0.039 | 0.004 | 0.001 | 0.099 |
| | 32020 | OTHR | -0.012 | -1.885 | 0.151 | -0.027 | -0.038 | -0.040 | -0.008 | 0.023 |
| | | TEMP | 0.445 | 4.720 | 2.524 | -0.285 | -1.833 | -0.377 | 0.922 | 0.167 |
| | | SEIS | 0.263 | 5.284 | 3.554 | 0.361 | 0.151 | 0.135 | 0.240 | 0.042 |
| | | HYDR | 0.028 | 0.390 | 0.200 | 0.064 | 0.007 | 0.011 | 0.048 | 0.005 |
| | 42001 | OTHR | -0.015 | -1.942 | 0.065 | -0.011 | -0.070 | 0.055 | 0.004 | 0.047 |
| | | TEMP | 2.451 | 3.607 | 2.534 | -0.371 | -1.611 | -0.058 | -0.794 | -0.254 |
| | | SEIS | 0.225 | 5.235 | 3.697 | 0.356 | 0.123 | 0.163 | 0.227 | 0.046 |
| | | HYDR | 0.048 | 0.408 | 0.224 | 0.083 | 0.007 | 0.008 | 0.033 | 0.002 |
| | 42011 | OTHR | -0.243 | -2.285 | -0.042 | -0.036 | -0.102 | -0.003 | 0.004 | -0.039 |
| | | TEMP | 12.432 | 4.405 | 0.143 | -2.975 | -2.774 | 0.081 | 0.081 | 0.172 |
| | | SEIS | 0.943 | 3.822 | 5.968 | 0.064 | 0.220 | 0.032 | 0.046 | 0.091 |
| | | HYDR | 0.159 | 0.532 | 0.361 | 0.031 | 0.033 | 0.008 | 0.004 | 0.093 |

## Table 3G.1-48 Combined Forces and Moments: RB, Selected Load Combination RB-9a (Continued)

| Location | Element ID | | Nx (MN/m) | Ny (MN/m) | Nxy (MN/m) | Mx (MNm/m) | My (MNm/m) | Mxy (MNm/m) | Qx (MN/m) | Qy (MN/m) |
|---|---|---|---|---|---|---|---|---|---|---|
| 23 Exterior Wall @ EL22.50 to 24.60m | 24211 | OTHR | 0.142 | -1.583 | 0.082 | -0.022 | -0.203 | 0.012 | 0.003 | -0.211 |
| | | TEMP | 4.177 | 2.901 | -0.313 | 0.092 | 0.628 | 0.014 | -0.122 | 1.431 |
| | | SEIS | 1.044 | 5.100 | 5.785 | 0.219 | 0.980 | 0.061 | 0.009 | 0.902 |
| | | HYDR | 0.142 | 0.484 | 0.283 | 0.030 | 0.133 | 0.015 | 0.002 | 0.151 |
| | 24224 | OTHR | -0.022 | -1.342 | 0.214 | 0.037 | -0.015 | -0.027 | -0.050 | -0.020 |
| | | TEMP | 0.340 | 4.642 | -3.562 | 0.871 | -0.344 | -0.446 | -0.824 | -0.417 |
| | | SEIS | 0.398 | 8.959 | 4.284 | 0.751 | 1.033 | 0.294 | 0.365 | 1.129 |
| | | HYDR | 0.024 | 0.485 | 0.236 | 0.095 | 0.064 | 0.024 | 0.047 | 0.068 |
| | 34210 | OTHR | 0.396 | -0.758 | 0.068 | 0.006 | 0.104 | 0.001 | 0.001 | 0.035 |
| | | TEMP | 15.323 | 4.794 | -0.317 | -2.778 | -2.409 | 0.015 | -0.011 | 0.104 |
| | | SEIS | 1.282 | 1.876 | 3.821 | 0.074 | 0.435 | 0.015 | 0.012 | 0.175 |
| | | HYDR | 0.202 | 0.102 | 0.171 | 0.015 | 0.077 | 0.009 | 0.001 | 0.041 |
| | 34220 | OTHR | 0.071 | -1.204 | -0.033 | 0.060 | 0.010 | -0.010 | 0.042 | -0.001 |
| | | TEMP | 1.721 | 4.437 | 2.297 | 0.980 | -1.464 | -0.240 | 1.609 | 0.013 |
| | | SEIS | 0.161 | 2.508 | 2.967 | 0.161 | 0.147 | 0.023 | 0.056 | 0.028 |
| | | HYDR | 0.028 | 0.231 | 0.098 | 0.036 | 0.015 | 0.017 | 0.023 | 0.007 |
| | 44201 | OTHR | 0.034 | -1.296 | -0.131 | 0.061 | 0.015 | 0.008 | -0.045 | -0.007 |
| | | TEMP | 1.001 | 5.209 | 0.300 | 0.668 | -1.698 | 0.337 | -1.911 | 0.044 |
| | | SEIS | 0.181 | 2.787 | 3.345 | 0.110 | 0.044 | 0.062 | 0.111 | 0.034 |
| | | HYDR | 0.026 | 0.280 | 0.164 | 0.033 | 0.005 | 0.003 | 0.024 | 0.004 |
| 24 Basemat @ Wall Below RCCV | 90140 | OTHR | -3.152 | -2.663 | 0.155 | -1.123 | -0.473 | 1.586 | -1.890 | 1.682 |
| | | TEMP | 1.052 | 1.448 | 1.374 | 0.756 | -0.217 | -0.971 | -0.682 | -0.069 |
| | | SEIS | 0.987 | 5.106 | 3.764 | 7.300 | 3.575 | 4.121 | 4.750 | 6.017 |
| | | HYDR | 0.511 | 0.359 | 0.401 | 0.987 | 0.702 | 0.218 | 0.702 | 0.721 |
| | 90182 | OTHR | -2.490 | -2.534 | -0.046 | 0.224 | -1.047 | -0.030 | 0.047 | 0.448 |
| | | TEMP | 1.619 | 0.481 | 0.610 | -0.246 | -3.861 | 0.184 | -0.141 | 2.769 |
| | | SEIS | 6.520 | 1.022 | 1.631 | 1.857 | 2.393 | 1.579 | 1.731 | 4.154 |
| | | HYDR | 0.940 | 0.180 | 0.184 | 0.566 | 0.378 | 0.154 | 0.197 | 0.791 |
| | 90111 | OTHR | -3.919 | -2.439 | -0.021 | -1.644 | 0.188 | -0.215 | 0.134 | 0.117 |
| | | TEMP | 0.567 | 2.209 | -0.001 | -4.129 | -0.522 | 0.050 | 2.860 | 0.127 |
| | | SEIS | 1.210 | 6.067 | 0.979 | 2.069 | 1.701 | 1.400 | 2.440 | 2.861 |
| | | HYDR | 0.141 | 0.811 | 0.051 | 0.274 | 0.454 | 0.121 | 0.736 | 0.189 |

## Table 3G.1-48 Combined Forces and Moments: RB, Selected Load Combination RB-9a (Continued)

| Location | Element ID | | Nx (MN/m) | Ny (MN/m) | Nxy (MN/m) | Mx (MNm/m) | My (MNm/m) | Mxy (MNm/m) | Qx (MN/m) | Qy (MN/m) |
|---|---|---|---|---|---|---|---|---|---|---|
| 25 Slab EL4.65m @ RCCV | 93140 | OTHR | -0.355 | 0.055 | 0.232 | 0.096 | 0.110 | -0.088 | 0.129 | -0.109 |
| | | TEMP | -0.669 | 2.312 | 4.286 | -0.515 | -0.395 | 0.287 | -0.135 | 0.111 |
| | | SEIS | 2.338 | 0.441 | 0.249 | 0.456 | 0.313 | 0.222 | 0.173 | 0.171 |
| | | HYDR | 0.182 | 0.196 | 0.238 | 0.036 | 0.027 | 0.036 | 0.010 | 0.012 |
| | 93182 | OTHR | 0.124 | -0.146 | 0.021 | 0.009 | 0.067 | 0.006 | -0.004 | -0.052 |
| | | TEMP | 4.229 | -4.036 | -1.098 | -0.354 | -1.829 | -0.083 | 0.075 | 1.370 |
| | | SEIS | 0.581 | 0.171 | 0.500 | 0.148 | 0.714 | 0.027 | 0.037 | 0.681 |
| | | HYDR | 0.290 | 0.073 | 0.082 | 0.025 | 0.042 | 0.004 | 0.005 | 0.108 |
| | 93111 | OTHR | -0.186 | 0.248 | -0.015 | 0.020 | -0.002 | -0.001 | -0.011 | -0.005 |
| | | TEMP | -3.602 | 4.956 | -0.257 | -1.768 | -0.316 | -0.047 | 1.178 | 0.000 |
| | | SEIS | 0.171 | 0.160 | 0.219 | 0.268 | 0.045 | 0.030 | 0.247 | 0.006 |
| | | HYDR | 0.073 | 0.316 | 0.068 | 0.013 | 0.021 | 0.002 | 0.066 | 0.002 |
| 26 Slab EL17.5m @ RCCV | 96144 | OTHR | -0.007 | 0.453 | 0.581 | 0.117 | 0.124 | -0.096 | 0.133 | -0.113 |
| | | TEMP | -0.269 | 4.712 | 6.965 | -0.230 | -0.125 | 0.167 | -0.073 | 0.023 |
| | | SEIS | 0.573 | 0.343 | 0.278 | 0.356 | 0.288 | 0.199 | 0.127 | 0.109 |
| | | HYDR | 0.056 | 0.021 | 0.228 | 0.068 | 0.057 | 0.034 | 0.013 | 0.015 |
| | 96186 | OTHR | 0.763 | -0.307 | -0.073 | 0.003 | 0.050 | 0.000 | -0.003 | -0.079 |
| | | TEMP | 6.688 | -4.125 | -1.418 | -0.091 | -0.316 | -0.048 | 0.016 | 0.347 |
| | | SEIS | 0.771 | 0.257 | 0.280 | 0.142 | 0.750 | 0.027 | 0.044 | 0.601 |
| | | HYDR | 0.176 | 0.097 | 0.118 | 0.035 | 0.162 | 0.006 | 0.008 | 0.130 |
| | 96113 | OTHR | -0.370 | 1.242 | -0.107 | 0.114 | 0.047 | -0.008 | 0.046 | 0.016 |
| | | TEMP | -8.342 | 2.574 | -1.682 | -4.481 | -2.783 | -0.199 | 1.240 | -0.059 |
| | | SEIS | 0.238 | 1.114 | 0.628 | 0.581 | 0.080 | 0.022 | 0.522 | 0.084 |
| | | HYDR | 0.054 | 0.335 | 0.192 | 0.246 | 0.059 | 0.009 | 0.189 | 0.020 |
| 27 Slab EL27.0m @ RCCV | 98472 | OTHR | 0.484 | 0.424 | -0.073 | 0.098 | 0.138 | -0.095 | 0.233 | -0.246 |
| | | TEMP | -0.778 | -0.772 | 5.392 | -0.313 | 0.031 | -0.311 | 0.451 | -0.561 |
| | | SEIS | 1.074 | 1.032 | 0.499 | 0.268 | 0.372 | 0.232 | 0.252 | 0.290 |
| | | HYDR | 0.100 | 0.049 | 0.146 | 0.061 | 0.079 | 0.039 | 0.048 | 0.051 |
| | 98514 | OTHR | 0.185 | 0.394 | 0.040 | 0.000 | -0.117 | 0.009 | 0.002 | -0.136 |
| | | TEMP | 0.436 | -2.393 | -1.392 | -0.533 | -0.070 | -0.005 | 0.036 | -0.726 |
| | | SEIS | 0.496 | 0.238 | 0.444 | 0.105 | 0.573 | 0.025 | 0.015 | 0.463 |
| | | HYDR | 0.171 | 0.078 | 0.171 | 0.028 | 0.131 | 0.004 | 0.002 | 0.112 |
| | 98424 | OTHR | -0.206 | 1.190 | -0.051 | 0.658 | 0.260 | -0.086 | -0.781 | -0.062 |
| | | TEMP | -9.063 | -6.855 | -1.452 | 1.316 | -0.418 | 0.194 | -5.559 | -0.101 |
| | | SEIS | 1.239 | 1.405 | 6.000 | 2.252 | 0.701 | 0.250 | 1.676 | 0.132 |
| | | HYDR | 0.047 | 0.148 | 0.092 | 0.231 | 0.096 | 0.014 | 0.157 | 0.010 |

## Table 3G.1-48 Combined Forces and Moments: RB, Selected Load Combination RB-9a (Continued)

| Location | Element ID | | Nx (MN/m) | Ny (MN/m) | Nxy (MN/m) | Mx (MNm/m) | My (MNm/m) | Mxy (MNm/m) | Qx (MN/m) | Qy (MN/m) |
|---|---|---|---|---|---|---|---|---|---|---|
| 28 Pool Girder @ Storage Pool | 123054 | OTHR | 0.320 | -0.358 | 0.590 | 0.065 | 0.025 | -0.066 | -0.034 | -0.052 |
| | | TEMP | 1.314 | -2.832 | 1.430 | 2.281 | 2.120 | 0.027 | -0.232 | 0.482 |
| | | SEIS | 0.567 | 2.862 | 0.901 | 0.349 | 0.164 | 0.091 | 0.029 | 0.214 |
| | | HYDR | 0.118 | 0.151 | 0.128 | 0.010 | 0.008 | 0.005 | 0.012 | 0.012 |
| | 123154 | OTHR | 0.636 | -0.183 | 0.550 | 0.085 | 0.036 | -0.059 | -0.040 | 0.019 |
| | | TEMP | 1.031 | 0.747 | -0.407 | 1.925 | 1.145 | -0.338 | -0.086 | 0.247 |
| | | SEIS | 1.903 | 0.756 | 0.974 | 0.239 | 0.083 | 0.131 | 0.056 | 0.012 |
| | | HYDR | 0.215 | 0.029 | 0.123 | 0.014 | 0.009 | 0.016 | 0.006 | 0.001 |
| 29 Pool Girder @ Well | 123062 | OTHR | 0.409 | -0.519 | -0.742 | -0.026 | 0.039 | 0.012 | 0.048 | 0.056 |
| | | TEMP | -1.254 | -0.148 | -0.719 | 0.101 | 0.323 | 0.027 | 0.057 | 0.172 |
| | | SEIS | 0.682 | 1.107 | 0.498 | 0.107 | 0.171 | 0.057 | 0.065 | 0.107 |
| | | HYDR | 0.126 | 0.015 | 0.096 | 0.008 | 0.011 | 0.004 | 0.005 | 0.003 |
| | 123162 | OTHR | 0.850 | -0.177 | -0.579 | -0.013 | -0.028 | 0.006 | 0.027 | -0.010 |
| | | TEMP | -1.691 | -0.032 | -0.470 | 0.128 | -0.117 | -0.003 | -0.151 | 0.085 |
| | | SEIS | 1.683 | 0.934 | 0.368 | 0.199 | 0.073 | 0.035 | 0.159 | 0.044 |
| | | HYDR | 0.318 | 0.014 | 0.091 | 0.016 | 0.010 | 0.003 | 0.011 | 0.003 |
| 30 Pool Girder @ Buffer Pool | 123067 | OTHR | 0.342 | -0.154 | -0.357 | -0.023 | -0.071 | -0.017 | -0.079 | -0.053 |
| | | TEMP | -2.405 | -6.001 | -1.842 | 0.639 | 0.439 | -0.117 | -0.150 | 0.470 |
| | | SEIS | 0.865 | 3.317 | 1.559 | 0.199 | 0.172 | 0.105 | 0.128 | 0.274 |
| | | HYDR | 0.124 | 0.755 | 0.287 | 0.021 | 0.020 | 0.008 | 0.017 | 0.021 |
| | 123167 | OTHR | 0.062 | -0.073 | -0.424 | 0.011 | -0.028 | 0.025 | -0.069 | 0.002 |
| | | TEMP | -2.204 | -2.669 | -2.246 | 0.268 | -0.449 | -0.228 | -0.011 | 0.180 |
| | | SEIS | 1.426 | 0.863 | 1.646 | 0.073 | 0.126 | 0.070 | 0.060 | 0.020 |
| | | HYDR | 0.336 | 0.219 | 0.315 | 0.014 | 0.006 | 0.005 | 0.008 | 0.003 |
| 31 MS Tunnel Wall and Slab | 150122 | OTHR | 0.017 | -0.186 | 0.340 | 0.022 | 0.085 | 0.015 | -0.008 | -0.058 |
| | | TEMP | 0.224 | -0.515 | 1.901 | 1.053 | 3.140 | -0.007 | -0.584 | 0.364 |
| | | SEIS | 0.028 | 0.234 | 0.256 | 0.054 | 0.188 | 0.053 | 0.015 | 0.271 |
| | | HYDR | 0.013 | 0.039 | 0.004 | 0.006 | 0.024 | 0.004 | 0.002 | 0.014 |
| | 96611 | OTHR | -0.037 | 0.580 | -0.034 | 0.060 | -0.078 | -0.053 | -0.072 | 0.017 |
| | | TEMP | -0.447 | 4.103 | -0.332 | -1.287 | -7.109 | -0.423 | 0.426 | 0.209 |
| | | SEIS | 0.059 | 0.477 | 0.078 | 0.112 | 0.436 | 0.132 | 0.083 | 0.082 |
| | | HYDR | 0.007 | 0.053 | 0.008 | 0.031 | 0.072 | 0.013 | 0.011 | 0.006 |
| | 98614 | OTHR | -0.014 | -0.283 | -0.014 | -0.130 | -0.852 | -0.114 | -0.011 | 0.046 |
| | | TEMP | -0.187 | 1.989 | -0.145 | -0.861 | -10.477 | -0.011 | 0.470 | 0.303 |
| | | SEIS | 0.047 | 0.309 | 0.039 | 0.134 | 0.654 | 0.371 | 0.066 | 0.049 |
| | | HYDR | 0.004 | 0.081 | 0.005 | 0.004 | 0.040 | 0.006 | 0.001 | 0.007 |

*OTHR: Loads other than thermal, seismic and hydrodynamic loads*
*TEMP: Thermal loads*
*SEIS: Seismic loads*
*HYDR: Hydrodynamic loads*
*SI to U.S. Customary units conversion (SI units are the controlling units and U.S. Customary units are for reference only):*
*1 MN/m = $6.852 \times 10^4$ lbf/ft*
*1 MNm/m = $2.248 \times 10^5$ lbf-ft/ft*

## Table 3G.1-49 *Combined Forces and Moments: RB, Selected Load Combination RB-9b*

| | Element ID | | Nx (MN/m) | Ny (MN/m) | Nxy (MN/m) | Mx (MNm/m) | My (MNm/m) | Mxy (MNm/m) | Qx (MN/m) | Qy (MN/m) |
|---|---|---|---|---|---|---|---|---|---|---|
| 18 Wall Below RCCV Bottom | 6 | OTHR | -1.466 | -6.231 | -0.226 | -0.009 | -0.342 | -0.005 | 0.002 | 0.003 |
| | | TEMP | 0.745 | -0.977 | -0.895 | 0.238 | 1.920 | -0.053 | 0.044 | 0.293 |
| | | SEIS | 6.696 | 12.988 | 5.722 | 1.271 | 7.124 | 0.093 | 0.215 | 2.708 |
| | | HYDR | 0.564 | 1.225 | 0.276 | 0.162 | 0.924 | 0.002 | 0.008 | 0.323 |
| | 13 | OTHR | -1.386 | -4.756 | 0.006 | -0.311 | -1.562 | 0.006 | -0.005 | -0.405 |
| | | TEMP | -0.174 | -4.065 | -0.782 | 0.604 | 3.357 | -0.002 | 0.023 | 0.785 |
| | | SEIS | 5.186 | 11.839 | 4.076 | 0.918 | 5.398 | 0.059 | 0.107 | 2.066 |
| | | HYDR | 0.446 | 1.240 | 0.285 | 0.124 | 0.725 | 0.003 | 0.006 | 0.250 |
| | 24 | OTHR | -1.206 | -5.176 | -0.157 | -0.355 | -2.143 | -0.001 | 0.003 | -0.727 |
| | | TEMP | 0.101 | -3.765 | 0.212 | 0.594 | 3.314 | -0.007 | -0.003 | 0.779 |
| | | SEIS | 3.487 | 9.762 | 6.470 | 0.650 | 3.735 | 0.101 | 0.148 | 1.099 |
| | | HYDR | 0.491 | 1.370 | 0.273 | 0.092 | 0.573 | 0.003 | 0.005 | 0.203 |
| 19 Wall Below RCCV Mid-Height | 806 | OTHR | -1.113 | -5.043 | -0.189 | 0.009 | 0.050 | -0.021 | -0.013 | -0.073 |
| | | TEMP | 1.907 | -2.149 | 0.225 | 0.307 | 1.688 | 0.090 | -0.068 | -0.082 |
| | | SEIS | 3.208 | 10.327 | 6.462 | 0.129 | 0.397 | 0.170 | 0.078 | 0.256 |
| | | HYDR | 0.151 | 1.212 | 0.367 | 0.012 | 0.070 | 0.018 | 0.002 | 0.020 |
| | 813 | OTHR | -1.512 | -4.691 | 0.148 | -0.017 | 0.125 | -0.006 | 0.002 | -0.037 |
| | | TEMP | 1.360 | -3.986 | -0.566 | 0.221 | 1.702 | -0.034 | 0.006 | 0.602 |
| | | SEIS | 3.060 | 10.805 | 4.961 | 0.145 | 0.684 | 0.059 | 0.026 | 0.379 |
| | | HYDR | 0.116 | 1.258 | 0.385 | 0.017 | 0.068 | 0.007 | 0.002 | 0.059 |
| | 824 | OTHR | -1.785 | -5.057 | -0.054 | 0.106 | 0.407 | 0.009 | -0.001 | 0.097 |
| | | TEMP | 1.151 | -3.732 | 0.198 | 0.224 | 1.729 | 0.027 | 0.015 | 0.502 |
| | | SEIS | 2.262 | 9.222 | 7.635 | 0.223 | 0.611 | 0.100 | 0.051 | 0.267 |
| | | HYDR | 0.127 | 1.390 | 0.359 | 0.009 | 0.073 | 0.009 | 0.001 | 0.038 |
| 20 Wall Below RCCV Top | 1606 | OTHR | -0.164 | -4.421 | -0.060 | -0.180 | -1.048 | 0.024 | 0.005 | 0.226 |
| | | TEMP | 15.858 | -3.114 | 0.381 | -0.839 | -4.009 | 0.124 | 0.101 | 3.042 |
| | | SEIS | 2.070 | 7.762 | 7.056 | 0.382 | 1.853 | 0.126 | 0.026 | 0.406 |
| | | HYDR | 0.485 | 1.233 | 0.351 | 0.259 | 1.447 | 0.006 | 0.005 | 0.427 |
| | 1613 | OTHR | -0.350 | -4.601 | 0.245 | -0.207 | -1.059 | -0.003 | -0.003 | 0.249 |
| | | TEMP | 15.713 | -4.649 | -0.420 | -1.005 | -5.538 | -0.011 | -0.016 | 3.612 |
| | | SEIS | 1.432 | 8.968 | 5.015 | 0.385 | 2.293 | 0.041 | 0.017 | 0.757 |
| | | HYDR | 0.476 | 1.260 | 0.360 | 0.256 | 1.476 | 0.003 | 0.006 | 0.454 |
| | 1624 | OTHR | 0.039 | -4.603 | -0.010 | -0.241 | -1.476 | 0.006 | -0.007 | 0.424 |
| | | TEMP | 16.688 | -4.842 | -0.107 | -1.115 | -5.549 | 0.001 | -0.106 | 3.698 |
| | | SEIS | 1.370 | 7.973 | 7.604 | 0.184 | 1.264 | 0.056 | 0.047 | 0.548 |
| | | HYDR | 0.524 | 1.371 | 0.354 | 0.254 | 1.436 | 0.003 | 0.008 | 0.449 |

## Table 3G.1-49 Combined Forces and Moments: RB, Selected Load Combination RB-9b (Continued)

| | Element ID | | Nx (MN/m) | Ny (MN/m) | Nxy (MN/m) | Mx (MNm/m) | My (MNm/m) | Mxy (MNm/m) | Qx (MN/m) | Qy (MN/m) |
|---|---|---|---|---|---|---|---|---|---|---|
| 21 Exterior Wall @ EL-11.50 to -10.50m | 20011 | OTHR | -1.800 | -3.386 | -0.714 | 0.158 | 0.867 | 0.016 | 0.037 | 0.281 |
| | | TEMP | 3.314 | 4.817 | 0.922 | 0.447 | 1.837 | 0.052 | -0.225 | 0.576 |
| | | SEIS | 2.167 | 3.650 | 9.866 | 2.028 | 8.326 | 0.065 | 0.140 | 3.143 |
| | | HYDR | 0.099 | 0.152 | 0.412 | 0.204 | 0.828 | 0.007 | 0.021 | 0.305 |
| | 20023 | OTHR | -1.160 | -1.469 | -0.585 | -0.014 | -0.242 | 0.012 | -0.057 | -0.139 |
| | | TEMP | -1.453 | -1.169 | 1.549 | 1.890 | 4.020 | 0.180 | 0.322 | 0.683 |
| | | SEIS | 0.864 | 5.664 | 1.335 | 0.917 | 1.307 | 0.189 | 1.237 | 0.863 |
| | | HYDR | 0.011 | 0.336 | 0.082 | 0.053 | 0.078 | 0.008 | 0.064 | 0.048 |
| | 30010 | OTHR | -1.205 | -2.316 | -0.173 | -0.207 | -1.150 | 0.009 | 0.001 | 0.865 |
| | | TEMP | 0.688 | 3.733 | -0.258 | 1.289 | 4.763 | -0.022 | -0.031 | -0.865 |
| | | SEIS | 4.300 | 5.359 | 3.754 | 0.691 | 3.619 | 0.060 | 0.088 | 1.243 |
| | | HYDR | 0.304 | 0.132 | 0.184 | 0.100 | 0.526 | 0.002 | 0.004 | 0.133 |
| | 30020 | OTHR | -0.963 | -1.631 | -0.232 | -0.544 | -0.775 | 0.020 | -0.152 | 0.328 |
| | | TEMP | -0.058 | -1.477 | -0.392 | 0.021 | 1.209 | 0.144 | -0.026 | -0.282 |
| | | SEIS | 0.758 | 4.090 | 1.578 | 0.461 | 1.470 | 0.176 | 0.453 | 0.467 |
| | | HYDR | 0.024 | 0.444 | 0.117 | 0.021 | 0.092 | 0.004 | 0.033 | 0.028 |
| | 40001 | OTHR | -0.757 | -1.800 | 0.361 | -0.330 | -1.083 | -0.199 | 0.070 | 0.626 |
| | | TEMP | -0.090 | -1.141 | 0.056 | 0.039 | 1.330 | -0.097 | 0.105 | -0.322 |
| | | SEIS | 0.614 | 4.241 | 1.322 | 0.703 | 1.722 | 0.243 | 0.522 | 0.481 |
| | | HYDR | 0.024 | 0.458 | 0.102 | 0.034 | 0.083 | 0.005 | 0.034 | 0.022 |
| | 40011 | OTHR | -1.359 | -3.034 | -0.028 | -0.251 | -1.512 | -0.001 | 0.005 | 1.542 |
| | | TEMP | 1.295 | 3.630 | 0.051 | 1.243 | 4.654 | 0.011 | 0.015 | -0.844 |
| | | SEIS | 3.659 | 4.532 | 4.410 | 0.427 | 2.566 | 0.087 | 0.122 | 0.940 |
| | | HYDR | 0.232 | 0.250 | 0.214 | 0.069 | 0.354 | 0.003 | 0.006 | 0.085 |
| 22 Exterior Wall @ EL4.65 to 6.60m | 22011 | OTHR | 0.178 | -2.784 | 0.633 | -0.005 | 0.103 | 0.012 | -0.025 | 0.146 |
| | | TEMP | 5.080 | 4.474 | -0.209 | -0.175 | -0.228 | 0.067 | 0.045 | 0.074 |
| | | SEIS | 1.395 | 8.082 | 7.242 | 0.140 | 0.949 | 0.161 | 0.051 | 0.897 |
| | | HYDR | 0.173 | 0.555 | 0.436 | 0.009 | 0.057 | 0.014 | 0.002 | 0.115 |
| | 22023 | OTHR | -0.060 | -1.615 | -0.037 | 0.071 | 0.037 | -0.071 | 0.046 | 0.010 |
| | | TEMP | 2.211 | -3.114 | -2.141 | 0.528 | 0.492 | -0.052 | 0.386 | 0.393 |
| | | SEIS | 0.390 | 7.366 | 4.135 | 0.400 | 0.178 | 0.169 | 0.414 | 0.150 |
| | | HYDR | 0.037 | 0.295 | 0.213 | 0.080 | 0.023 | 0.019 | 0.022 | 0.008 |
| | 32010 | OTHR | 0.127 | -1.877 | 0.035 | -0.019 | 0.005 | 0.006 | 0.000 | -0.087 |
| | | TEMP | 16.739 | 7.724 | -0.075 | -2.893 | -3.003 | -0.001 | -0.014 | 0.022 |
| | | SEIS | 1.427 | 4.890 | 4.400 | 0.041 | 0.275 | 0.024 | 0.002 | 0.240 |
| | | HYDR | 0.201 | 0.217 | 0.231 | 0.014 | 0.033 | 0.003 | 0.001 | 0.076 |
| | 32020 | OTHR | -0.004 | -1.867 | 0.188 | -0.011 | -0.033 | -0.047 | 0.002 | 0.025 |
| | | TEMP | 0.653 | 4.869 | 2.518 | 0.104 | -1.860 | -0.395 | 1.226 | 0.199 |
| | | SEIS | 0.263 | 5.284 | 3.554 | 0.361 | 0.151 | 0.135 | 0.240 | 0.042 |
| | | HYDR | 0.023 | 0.275 | 0.154 | 0.054 | 0.005 | 0.010 | 0.040 | 0.004 |
| | 42001 | OTHR | -0.006 | -1.917 | 0.083 | 0.010 | -0.065 | 0.058 | -0.004 | 0.048 |
| | | TEMP | 2.720 | 3.801 | 2.644 | 0.130 | -1.563 | -0.051 | -0.998 | -0.239 |
| | | SEIS | 0.225 | 5.235 | 3.697 | 0.356 | 0.123 | 0.163 | 0.227 | 0.046 |
| | | HYDR | 0.039 | 0.291 | 0.171 | 0.069 | 0.005 | 0.006 | 0.028 | 0.002 |
| | 42011 | OTHR | -0.170 | -2.222 | -0.035 | -0.039 | -0.096 | -0.004 | 0.004 | -0.055 |
| | | TEMP | 14.110 | 5.515 | 0.234 | -3.164 | -3.046 | 0.073 | 0.090 | 0.169 |
| | | SEIS | 0.943 | 3.822 | 5.968 | 0.064 | 0.220 | 0.032 | 0.046 | 0.091 |
| | | HYDR | 0.134 | 0.389 | 0.271 | 0.027 | 0.032 | 0.007 | 0.004 | 0.077 |

## Table 3G.1-49 Combined Forces and Moments: RB, Selected Load Combination RB-9b (Continued)

| | Element ID | | Nx (MN/m) | Ny (MN/m) | Nxy (MN/m) | Mx (MNm/m) | My (MNm/m) | Mxy (MNm/m) | Qx (MN/m) | Qy (MN/m) |
|---|---|---|---|---|---|---|---|---|---|---|
| 23 Exterior Wall @ EL22.50 to 24.60m | 24211 | OTHR | 0.224 | -1.526 | 0.077 | -0.011 | -0.136 | 0.013 | 0.004 | -0.244 |
| | | TEMP | 6.073 | 5.669 | -0.239 | 0.176 | 0.982 | 0.008 | -0.147 | 1.336 |
| | | SEIS | 1.044 | 5.100 | 5.785 | 0.219 | 0.980 | 0.061 | 0.009 | 0.902 |
| | | HYDR | 0.102 | 0.359 | 0.211 | 0.022 | 0.100 | 0.011 | 0.002 | 0.109 |
| | 24224 | OTHR | -0.019 | -1.388 | 0.185 | 0.035 | -0.010 | -0.023 | -0.044 | -0.018 |
| | | TEMP | 1.011 | 5.349 | -3.664 | 1.966 | 0.071 | -0.637 | -1.563 | -0.323 |
| | | SEIS | 0.398 | 8.959 | 4.284 | 0.751 | 1.033 | 0.294 | 0.365 | 1.129 |
| | | HYDR | 0.017 | 0.354 | 0.169 | 0.068 | 0.046 | 0.018 | 0.034 | 0.049 |
| | 34210 | OTHR | 0.482 | -0.741 | 0.070 | 0.005 | 0.122 | 0.001 | 0.001 | 0.041 |
| | | TEMP | 21.813 | 5.545 | -0.581 | -2.903 | -2.819 | 0.035 | -0.002 | -0.128 |
| | | SEIS | 1.282 | 1.876 | 3.821 | 0.074 | 0.435 | 0.015 | 0.012 | 0.175 |
| | | HYDR | 0.147 | 0.074 | 0.125 | 0.010 | 0.055 | 0.006 | 0.001 | 0.030 |
| | 34220 | OTHR | 0.074 | -1.259 | -0.008 | 0.061 | 0.018 | -0.009 | 0.042 | -0.002 |
| | | TEMP | 2.794 | 5.432 | 4.414 | 2.629 | -1.178 | -0.711 | 2.571 | 0.094 |
| | | SEIS | 0.161 | 2.508 | 2.967 | 0.161 | 0.147 | 0.023 | 0.056 | 0.028 |
| | | HYDR | 0.020 | 0.170 | 0.072 | 0.025 | 0.010 | 0.012 | 0.016 | 0.005 |
| | 44201 | OTHR | 0.035 | -1.333 | -0.088 | 0.064 | 0.020 | 0.006 | -0.044 | -0.008 |
| | | TEMP | 1.793 | 6.586 | 0.562 | 2.230 | -1.491 | 0.539 | -2.967 | 0.044 |
| | | SEIS | 0.181 | 2.787 | 3.345 | 0.110 | 0.044 | 0.062 | 0.111 | 0.034 |
| | | HYDR | 0.018 | 0.206 | 0.118 | 0.023 | 0.004 | 0.003 | 0.017 | 0.003 |
| 24 Basemat @ Wall Below RCCV | 90140 | OTHR | -3.157 | -2.633 | 0.208 | -0.962 | -0.343 | 1.376 | -1.878 | 1.649 |
| | | TEMP | 0.838 | 1.691 | 1.751 | -0.171 | -1.046 | -1.095 | -1.135 | 0.139 |
| | | SEIS | 0.987 | 5.106 | 3.764 | 7.300 | 3.575 | 4.121 | 4.750 | 6.017 |
| | | HYDR | 0.384 | 0.272 | 0.318 | 0.741 | 0.524 | 0.189 | 0.522 | 0.533 |
| | 90182 | OTHR | -2.379 | -2.523 | -0.050 | 0.157 | -0.815 | -0.002 | 0.042 | 0.436 |
| | | TEMP | 1.908 | 0.687 | 0.488 | -0.873 | -5.527 | 0.260 | -0.110 | 3.825 |
| | | SEIS | 6.520 | 1.022 | 1.631 | 1.857 | 2.393 | 1.579 | 1.731 | 4.154 |
| | | HYDR | 0.703 | 0.135 | 0.141 | 0.425 | 0.324 | 0.130 | 0.153 | 0.588 |
| | 90111 | OTHR | -3.906 | -2.382 | -0.027 | -1.414 | 0.129 | -0.183 | 0.121 | 0.114 |
| | | TEMP | 0.733 | 2.908 | -0.011 | -5.322 | -1.147 | 0.107 | 3.687 | 0.151 |
| | | SEIS | 1.210 | 6.067 | 0.979 | 2.069 | 1.701 | 1.400 | 2.440 | 2.861 |
| | | HYDR | 0.099 | 0.619 | 0.041 | 0.248 | 0.342 | 0.104 | 0.550 | 0.150 |

## *Table 3G.1-49 Combined Forces and Moments: RB, Selected Load Combination RB-9b* (Continued)

| Location | Element ID | | Nx (MN/m) | Ny (MN/m) | Nxy (MN/m) | Mx (MNm/m) | My (MNm/m) | Mxy (MNm/m) | Qx (MN/m) | Qy (MN/m) |
|---|---|---|---|---|---|---|---|---|---|---|
| 25 Slab EL4.65m @ RCCV | 93140 | OTHR | -0.338 | 0.084 | 0.258 | 0.104 | 0.116 | -0.095 | 0.130 | -0.110 |
| | | TEMP | -0.383 | 3.018 | 5.804 | -0.739 | -0.564 | 0.413 | -0.192 | 0.163 |
| | | SEIS | 2.338 | 0.441 | 0.249 | 0.456 | 0.313 | 0.222 | 0.173 | 0.171 |
| | | HYDR | 0.141 | 0.153 | 0.201 | 0.027 | 0.019 | 0.026 | 0.008 | 0.009 |
| | 93182 | OTHR | 0.177 | -0.134 | 0.018 | 0.008 | 0.077 | 0.007 | -0.004 | -0.047 |
| | | TEMP | 6.161 | -5.154 | -1.518 | -0.481 | -2.508 | -0.114 | 0.105 | 1.903 |
| | | SEIS | 0.581 | 0.171 | 0.500 | 0.148 | 0.714 | 0.027 | 0.037 | 0.681 |
| | | HYDR | 0.232 | 0.069 | 0.068 | 0.019 | 0.031 | 0.003 | 0.004 | 0.080 |
| | 93111 | OTHR | -0.174 | 0.295 | -0.024 | 0.031 | -0.003 | -0.001 | -0.009 | -0.005 |
| | | TEMP | -4.494 | 6.820 | -0.448 | -2.369 | -0.414 | -0.066 | 1.594 | 0.001 |
| | | SEIS | 0.171 | 0.160 | 0.219 | 0.268 | 0.045 | 0.030 | 0.247 | 0.006 |
| | | HYDR | 0.073 | 0.256 | 0.054 | 0.010 | 0.016 | 0.001 | 0.051 | 0.002 |
| 26 Slab EL17.5m @ RCCV | 96144 | OTHR | 0.009 | 0.536 | 0.669 | 0.130 | 0.133 | -0.103 | 0.136 | -0.116 |
| | | TEMP | 0.733 | 5.839 | 8.138 | -0.232 | -0.178 | 0.174 | -0.043 | 0.066 |
| | | SEIS | 0.573 | 0.343 | 0.278 | 0.356 | 0.288 | 0.199 | 0.127 | 0.109 |
| | | HYDR | 0.042 | 0.018 | 0.169 | 0.049 | 0.040 | 0.024 | 0.009 | 0.010 |
| | 96186 | OTHR | 0.880 | -0.355 | -0.096 | 0.006 | 0.068 | 0.002 | -0.004 | -0.094 |
| | | TEMP | 9.999 | -4.559 | -2.165 | -0.150 | -0.675 | -0.057 | 0.023 | 0.638 |
| | | SEIS | 0.771 | 0.257 | 0.280 | 0.142 | 0.750 | 0.027 | 0.044 | 0.601 |
| | | HYDR | 0.127 | 0.072 | 0.088 | 0.025 | 0.116 | 0.004 | 0.006 | 0.093 |
| | 96113 | OTHR | -0.443 | 1.400 | -0.139 | 0.171 | 0.057 | 0.000 | 0.001 | 0.013 |
| | | TEMP | -9.165 | 5.149 | -1.811 | -4.378 | -2.755 | -0.237 | 1.010 | -0.100 |
| | | SEIS | 0.238 | 1.114 | 0.628 | 0.581 | 0.080 | 0.022 | 0.522 | 0.084 |
| | | HYDR | 0.043 | 0.239 | 0.139 | 0.179 | 0.044 | 0.006 | 0.138 | 0.015 |
| 27 Slab EL27.0m @ RCCV | 98472 | OTHR | See Tables 3G.5-17 to 3G.5-20 | | | | | | | |
| | | TEMP | | | | | | | | |
| | | SEIS | | | | | | | | |
| | | HYDR | | | | | | | | |
| | 98514 | OTHR | | | | | | | | |
| | | TEMP | | | | | | | | |
| | | SEIS | | | | | | | | |
| | | HYDR | | | | | | | | |
| | 98424 | OTHR | | | | | | | | |
| | | TEMP | | | | | | | | |
| | | SEIS | | | | | | | | |
| | | HYDR | | | | | | | | |

## *Table 3G.1-49 Combined Forces and Moments: RB, Selected Load Combination RB-9b* (Continued)

| Location | Element ID | | Nx (MN/m) | Ny (MN/m) | Nxy (MN/m) | Mx (MNm/m) | My (MNm/m) | Mxy (MNm/m) | Qx (MN/m) | Qy (MN/m) |
|---|---|---|---|---|---|---|---|---|---|---|
| 28 Pool Girder @ Storage Pool | 123054 | OTHR | See Tables 3G.5-17 to 3G.5-20 | | | | | | | |
| | | TEMP | | | | | | | | |
| | | SEIS | | | | | | | | |
| | | HYDR | | | | | | | | |
| | 123154 | OTHR | | | | | | | | |
| | | TEMP | | | | | | | | |
| | | SEIS | | | | | | | | |
| | | HYDR | | | | | | | | |
| 29 Pool Girder @ Well | 123062 | OTHR | | | | | | | | |
| | | TEMP | | | | | | | | |
| | | SEIS | | | | | | | | |
| | | HYDR | | | | | | | | |
| | 123162 | OTHR | | | | | | | | |
| | | TEMP | | | | | | | | |
| | | SEIS | | | | | | | | |
| | | HYDR | | | | | | | | |
| 30 Pool Girder @ Buffer Pool | 123067 | OTHR | | | | | | | | |
| | | TEMP | | | | | | | | |
| | | SEIS | | | | | | | | |
| | | HYDR | | | | | | | | |
| | 123167 | OTHR | | | | | | | | |
| | | TEMP | | | | | | | | |
| | | SEIS | | | | | | | | |
| | | HYDR | | | | | | | | |
| 31 MS Tunnel Wall and Slab | 150122 | OTHR | 0.025 | -0.229 | 0.350 | 0.021 | 0.090 | 0.015 | -0.007 | -0.062 |
| | | TEMP | 0.316 | -0.711 | 1.797 | 0.940 | 3.101 | 0.011 | -0.551 | 0.426 |
| | | SEIS | 0.028 | 0.234 | 0.256 | 0.054 | 0.188 | 0.053 | 0.015 | 0.271 |
| | | HYDR | 0.009 | 0.029 | 0.003 | 0.004 | 0.018 | 0.003 | 0.001 | 0.010 |
| | 96611 | OTHR | -0.043 | 0.647 | -0.039 | 0.057 | -0.086 | -0.053 | -0.070 | 0.018 |
| | | TEMP | -0.557 | 4.662 | -0.414 | -1.254 | -7.116 | -0.406 | 0.420 | 0.206 |
| | | SEIS | 0.059 | 0.477 | 0.078 | 0.112 | 0.436 | 0.132 | 0.083 | 0.082 |
| | | HYDR | 0.005 | 0.039 | 0.006 | 0.023 | 0.054 | 0.009 | 0.008 | 0.004 |
| | 98614 | OTHR | -0.013 | -0.307 | -0.014 | -0.159 | -0.916 | -0.124 | -0.003 | 0.049 |
| | | TEMP | -0.043 | 0.725 | -0.043 | -0.850 | -9.922 | -0.018 | 0.459 | 0.307 |
| | | SEIS | 0.047 | 0.309 | 0.039 | 0.134 | 0.654 | 0.371 | 0.066 | 0.049 |
| | | HYDR | 0.003 | 0.061 | 0.003 | 0.003 | 0.030 | 0.004 | 0.001 | 0.005 |

*OTHR: Loads other than thermal, seismic and hydrodynamic loads*
*TEMP: Thermal loads*
*SEIS: Seismic loads*
*HYDR: Hydrodynamic loads*
*SI to U.S. Customary units conversion (SI units are the controlling units and U.S. Customary units are for reference only):*
*1 MN/m = $6.852 \times 10^4$ lbf/ft*
*1 MNm/m = $2.248 \times 10^5$ lbf-ft/ft*

## Table 3G.1-50 Sectional Thicknesses and Rebar Ratios of RB Used in the Evaluation

| Location | Element ID | Thickness (m) | Primary Reinforcement | | | | | Shear Tie | |
|---|---|---|---|---|---|---|---|---|---|
| | | | Position | Direction 1*1 | | Direction 2*1 | | | |
| | | | | Arrangement*2 | Ratio (%) | Arrangement*2 | Ratio (%) | Arrangement | Ratio (%) |
| 18 Wall Below RCCV Bottom | 6<br>13<br>24 | 2.0 | Inside | 2-#18@300 | 0.860 | 3-#18@0.9° | 1.297 | #9@0.9°x300 | 0.721 |
| | | | Outside | 3-#18@300 | 1.290 | 3-#18@0.9°<br>+1-#18@0.9° | 1.729 | | |
| 19 Wall Below Below RCCV Mid-Height | 806<br>813<br>824 | 2.0 | Inside | 2-#18@300 | 0.860 | 3-#18@0.9° | 1.297 | #9@1.2°x600 | 0.270 |
| | | | Outside | 3-#18@300 | 1.290 | 3-#18@0.9° | 1.297 | | |
| 20 Wall Below RCCV Top | 1606<br>1613<br>1624 | 2.0 | Inside | 2-#18@300 | 0.860 | 3-#18@0.9° | 1.297 | #9@1.2°x300 | 0.540 |
| | | | Outside | 3-#18@300 | 1.290 | 3-#18@0.9°<br>+1-#18@1.8° | 1.513 | | |
| 21 Exterior Wall @ EL-11.50 to -10.50m | 20011 | 2.0 | Inside | 4-#11@200<br>+1-#11@400 | 1.132 | 5-#11@200<br>(+1-#11@200) | 1.510 | #7@400x200 | 0.484 |
| | | | Outside | 4-#11@200<br>+1-#11@400 | 1.132 | 5-#11@200<br>(+2-#11@200) | 1.761 | | |
| | 20023 | 2.0 | Inside | 4-#11@200<br>+1-#11@400 | 1.132 | 5-#11@200<br>(+1-#11@200) | 1.510 | #7@400x200 | 0.484 |
| | | | Outside | 4-#11@200<br>+1-#11@400 | 1.132 | 5-#11@200 | 1.258 | | |
| | 30010<br>30020 | 2.0 | Inside | 1-#11@100<br>+3-#11@200 | 1.258 | 2-#11@100<br>+2-#11@200 | 1.510 | 6@200x200 | 0.710 |
| | | | Outside | 2-#11@100<br>+2-#11@200 | 1.510 | 3-#11@100<br>+1-#11@200 | 1.761 | | |
| | 40001<br>40011 | 2.0 | Inside | 1-#11@100<br>+3-#11@200 | 1.258 | 2-#11@100<br>+2-#11@200 | 1.510 | 6@200x200 | 0.710 |
| | | | Outside | 2-#11@100<br>+2-#11@200 | 1.510 | 2-#11@100<br>+2-#11@200 | 1.510 | | |

## Table 3G.1-50 Sectional Thicknesses and Rebar Ratios of RB Used in the Evaluation (Continued)

| Location | Element ID | Thickness (m) | Primary Reinforcement | | | | | Shear Tie | |
|---|---|---|---|---|---|---|---|---|---|
| | | | Position | Direction 1*1 | | Direction 2*1 | | | |
| | | | | Arrangement*2 | Ratio (%) | Arrangement*2 | Ratio (%) | Arrangement | Ratio (%) |
| 22 Exterior Wall @ EL4.65 to 6.60m | 22011 | 1.5 | Inside | 3-#11@200 +1-#11@400 | 1.174 | 4-#11@200 (+1-#11@200) | 1.677 | #7@400x200 | 0.484 |
| | | | Outside | 3-#11@200 +1-#11@400 | 1.174 | 4-#11@200 (+1-#11@200) | 1.677 | | |
| | 22023 | 1.5 | Inside | 3-#11@200 +1-#11@400 | 1.174 | 4-#11@200 | 1.342 | #7@400x200 | 0.484 |
| | | | Outside | 3-#11@200 +1-#11@400 | 1.174 | 4-#11@200 | 1.342 | | |
| | 32010 | 1.5 | Inside | 3-#11@200 | 1.006 | 3-#11@200 | 1.006 | #6@400x400 | 0.177 |
| | | | Outside | 3-#11@200 (+2-#11@200) | 1.677 | 3-#11@200 (+2-#11@200) | 1.677 | | |
| | 32020 | 1.5 | Inside | 3-#11@200 | 1.006 | 3-#11@200 | 1.006 | #6@400x400 | 0.177 |
| | | | Outside | 3-#11@200 | 1.006 | 3-#11@200 | 1.006 | | |
| | 42001 | 1.5 | Inside | 3-#11@200 | 1.006 | 3-#11@200 | 1.006 | #7@400x400 | 0.242 |
| | | | Outside | 4-#11@200 | 1.342 | 4-#11@200 | 1.342 | | |
| 22 Exterior Wall @ EL4.65 to 6.60m | 42011 | 1.5 | Inside | 3-#11@200 | 1.006 | 3-#11@200 | 1.006 | #7@400x400 | 0.242 |
| | | | Outside | 4-#11@200 (+1-#11@200) | 1.677 | 4-#11@200 (+1-#11@200) | 1.677 | | |
| 23 Exterior Wall @ EL22.50 to 24.60m | 24211 | 1.5 | Inside | 3-#11@200 +1-#11@400 | 1.174 | 4-#11@200 (+1-#11@200) | 1.677 | #7@400x200 | 0.484 |
| | | | Outside | 3-#11@200 +1-#11@400 | 1.174 | 4-#11@200 | 1.342 | | |
| | 24224 | 1.5 | Inside | 3-#11@200 +1-#11@400 | 1.174 | 4-#11@200 (+1-#11@200) | 1.677 | #7@200x200 | 0.968 |
| | | | Outside | 3-#11@200 +1-#11@400 | 1.174 | 4-#11@200 (+1-#11@200) | 1.677 | | |
| | 34210 | 1.5 | Inside | 3-#11@200 | 1.006 | 3-#11@200 | 1.006 | #6@400x400 | 0.177 |
| | | | Outside | 3-#11@200 (+2-#11@200) | 1.677 | 3-#11@200 (+2-#11@200) | 1.677 | | |
| | 34220 | 1.5 | Inside | 3-#11@200 | 1.006 | 3-#11@200 | 1.006 | #6@200x200 | 0.710 |
| | | | Outside | 3-#11@200 | 1.006 | 3-#11@200 | 1.006 | | |
| | 44201 | 1.5 | Inside | 3-#11@200 | 1.006 | 3-#11@200 | 1.006 | #7@200x200 | 0.968 |
| | | | Outside | 4-#11@200 | 1.342 | 4-#11@200 | 1.342 | | |

## Table 3G.1-50 Sectional Thicknesses and Rebar Ratios of RB Used in the Evaluation (Continued)

| Location | Element ID | Thickness (m) | Primary Reinforcement | | | | | Shear Tie | |
|---|---|---|---|---|---|---|---|---|---|
| | | | Position | Direction 1*1 | | Direction 2*1 | | | |
| | | | | Arrangement*2 | Ratio (%) | Arrangement*2 | Ratio (%) | Arrangement | Ratio (%) |
| 24 Basemat @ Wall Below RCCV | 90140 90182 90111 | 4.0 | Top | See Table 3G.5-21 | See Table 3G.5-21 | See Table 3G.5-21 | See Table 3G.5-21 | See Table 3G.5-21 | See Table 3G.5-21 |
| | | | Bottom | See Table 3G.5-21 | See Table 3G.5-21 | See Table 3G.5-21 | See Table 3G.5-21 | See Table 3G.5-21 | See Table 3G.5-21 |
| 25 Slab EL4.65m @ RCCV | 93140 93182 93111 | 1.0 | Top | See Table 3G.5-21 | See Table 3G.5-21 | See Table 3G.5-21 | See Table 3G.5-21 | See Table 3G.5-21 | See Table 3G.5-21 |
| | | | Bottom | See Table 3G.5-21 | See Table 3G.5-21 | See Table 3G.5-21 | See Table 3G.5-21 | See Table 3G.5-21 | See Table 3G.5-21 |
| 26 Slab EL17.5m @ RCCV | 96144 96186 | 1.0 | Top | See Table 3G.5-21 | See Table 3G.5-21 | See Table 3G.5-21 | See Table 3G.5-21 | See Table 3G.5-21 | See Table 3G.5-21 |
| | | | Bottom | See Table 3G.5-21 | See Table 3G.5-21 | See Table 3G.5-21 | See Table 3G.5-21 | See Table 3G.5-21 | See Table 3G.5-21 |
| | 96113 | 1.6 | Top | See Table 3G.5-21 | See Table 3G.5-21 | See Table 3G.5-21 | See Table 3G.5-21 | See Table 3G.5-21 | See Table 3G.5-21 |
| | | | Bottom | See Table 3G.5-21 | See Table 3G.5-21 | See Table 3G.5-21 | See Table 3G.5-21 | See Table 3G.5-21 | See Table 3G.5-21 |
| 27 Slab EL27.0m @ RCCV | 98472 98514 | See Table 3G.4 -21 | Top | See Table 3G.5-21 | See Table 3G.5-21 | See Table 3G.5-21 | See Table 3G.5-21 | See Table 3G.5-21 | See Table 3G.5-21 |
| | | | Bottom | See Table 3G.5-21 | See Table 3G.5-21 | See Table 3G.5-21 | See Table 3G.5-21 | See Table 3G.5-21 | See Table 3G.5-21 |
| | 98424 | 2.4 | Top | See Table 3G.5-21 | See Table 3G.5-21 | See Table 3G.5-21 | See Table 3G.5-21 | See Table 3G.5-21 | See Table 3G.5-21 |
| | | | Bottom | See Table 3G.5-21 | See Table 3G.5-21 | See Table 3G.5-21 | See Table 3G.5-21 | See Table 3G.5-21 | See Table 3G.5-21 |
| 28 Pool Girder @ Storage Pool | 123054 123154 | 1.6 | Inside | See Table 3G.5-21 | See Table 3G.5-21 | See Table 3G.5-21 | See Table 3G.5-21 | See Table 3G.5-21 | See Table 3G.5-21 |
| | | | Outside | See Table 3G.5-21 | See Table 3G.5-21 | See Table 3G.5-21 | See Table 3G.5-21 | See Table 3G.5-21 | See Table 3G.5-21 |
| 29 Pool Girder @ Well | 123062 123162 | 1.6 | Inside | See Table 3G.5-21 | See Table 3G.5-21 | See Table 3G.5-21 | See Table 3G.5-21 | See Table 3G.5-21 | See Table 3G.5-21 |
| | | | Outside | See Table 3G.5-21 | See Table 3G.5-21 | See Table 3G.5-21 | See Table 3G.5-21 | See Table 3G.5-21 | See Table 3G.5-21 |
| 30 Pool Girder @ Buffer Pool | 123067 | 1.6 | Inside | See Table 3G.5-21 | See Table 3G.5-21 | See Table 3G.5-21 | See Table 3G.5-21 | See Table 3G.5-21 | See Table 3G.5-21 |
| | | | Outside | See Table 3G.5-21 | See Table 3G.5-21 | See Table 3G.5-21 | See Table 3G.5-21 | See Table 3G.5-21 | See Table 3G.5-21 |
| 31 MS Tunnel Wall and Slab | 150122 | 1.3 | Inside | 2-#11@200 | 0.774 | 2-#11@200 | 0.774 | #6@400x400 | 0.177 |
| | | | Outside | 2-#11@200 +1-#11@400 | 0.968 | 2-#11@200 +1-#11@400 | 0.968 | | |
| | 96611 | 1.6 | Top | 2-#11@200 | 0.629 | 2-#11@200 | 0.629 | #5@200x200 | 0.500 |
| | | | Bottom | 3-#11@200 | 0.944 | 3-#11@200 | 0.944 | | |
| | 98614 | 2.4 | Top | 4-#11@200 | 0.839 | 4-#11@200 | 0.839 | #5@200x200 | 0.500 |
| | | | Bottom | 3-#11@200 | 0.629 | 3-#11@200 | 0.629 | | |

Note *1

| | | |
|---|---|---|
| Wall Below RCCV | Direction 1: Hoop | Direction 2: Vertical |
| Exterior Wall | Direction 1: Horizontal | Direction 2: Vertical |
| Slab/MS Tunnel Slab | Direction 1: N-S | Direction 2: E-W |
| Pool Girder | Direction 1: Horizontal | Direction 2: Vertical |
| MS Tunnel Wall | Direction 1: Horizontal | Direction 2: Vertical |
| Basemat | Direction 1: Top; Radial; Bottom; N-S | Direction 2: Top: Circumferential; Bottom; E-W |

Note *2 Rebar in parenthesis indicates additional bars locally required.

SI to U.S. Customary units conversion (SI units are the controlling units and U.S. Customary units are for reference only): 1m=3.28ft

## Table 3G.1-51 *Rebar and Concrete Stresses of RB: Selected Load Combination RB-4*

| Location | Element ID | Concrete Stress (MPa) | | Primary Reinforcement Stress (MPa) | | | | |
|---|---|---|---|---|---|---|---|---|
| | | Calculated | Allowable | Calculated | | | | Allowable |
| | | | | Direction 1* | | Direction 2* | | |
| | | | | In/Top | Out/Bottom | In/Top | Out/Bottom | |
| 18 Wall | 6 | -3.5 | -29.3 | 2.6 | 3.4 | -23.8 | -21.1 | 372.2 |
| Below RCCV | 13 | -4.0 | -29.3 | 0.4 | 0.9 | -26.7 | -24.5 | 372.2 |
| Bottom | 24 | -5.1 | -29.3 | 3.2 | 3.1 | -32.8 | -22.8 | 372.2 |
| 19 Wall Below | 806 | -4.5 | -29.3 | 2.6 | 3.3 | -17.7 | -27.5 | 372.2 |
| Below RCCV | 813 | -5.2 | -29.3 | -0.7 | 0.7 | -20.4 | -31.5 | 372.2 |
| Mid-Height | 824 | -6.1 | -29.3 | -1.1 | -1.0 | -21.1 | -35.9 | 372.2 |
| 20 Wall | 1606 | -5.8 | -29.3 | 16.8 | 18.4 | -33.5 | -12.6 | 372.2 |
| Below RCCV | 1613 | -8.2 | -29.3 | 13.5 | 16.9 | -45.6 | -8.6 | 372.2 |
| Top | 1624 | -9.3 | -29.3 | 13.7 | 22.0 | -51.3 | -11.1 | 372.2 |
| 21 Exterior Wall | 20011 | -1.6 | -29.3 | 4.2 | 0.6 | 6.0 | -7.4 | 372.2 |
| @ EL-11.50 | 20023 | -5.9 | -29.3 | 14.8 | -16.8 | 23.7 | -20.6 | 372.2 |
| to -10.50m | 30010 | -1.6 | -29.3 | 0.4 | -9.1 | 1.9 | -1.2 | 372.2 |
| | 30020 | -1.9 | -29.3 | -7.1 | 1.1 | -4.5 | -11.1 | 372.2 |
| | 40001 | -1.7 | -29.3 | -4.0 | -0.9 | -5.9 | -9.0 | 372.2 |
| | 40011 | -0.9 | -29.3 | 0.0 | -3.9 | 1.5 | -4.2 | 372.2 |
| 22 Exterior Wall | 22011 | -1.3 | -29.3 | 37.0 | 32.6 | 10.4 | 3.4 | 372.2 |
| @ EL4.65 | 22023 | -5.0 | -29.3 | 13.0 | 13.2 | -13.1 | -38.2 | 372.2 |
| to 6.60m | 32010 | -3.3 | -29.3 | 19.4 | 97.5 | -7.6 | 35.1 | 372.2 |
| | 32020 | -3.6 | -29.3 | 5.7 | 46.1 | -5.4 | 54.3 | 372.2 |
| | 42001 | -3.3 | -29.3 | 7.8 | 32.4 | -10.3 | 27.0 | 372.2 |
| | 42011 | -4.1 | -29.3 | 27.3 | 89.4 | -12.8 | 20.1 | 372.2 |
| 23 Exterior Wall | 24211 | -1.9 | -29.3 | 5.9 | 14.7 | -6.4 | 10.0 | 372.2 |
| @ EL22.50 | 24224 | -2.5 | -29.3 | 31.1 | -0.3 | 9.1 | 8.9 | 372.2 |
| to 24.60m | 34210 | -4.7 | -29.3 | 53.2 | 184.5 | 7.9 | 152.8 | 372.2 |
| | 34220 | -4.0 | -29.3 | 26.6 | 4.5 | -13.2 | 51.7 | 372.2 |
| | 44201 | -0.6 | -29.3 | 53.4 | 34.5 | 6.3 | 72.2 | 372.2 |
| 24 Basemat | 90140 | -1.7 | -23.5 | -11.3 | -3.3 | 1.6 | -0.1 | 372.2 |
| @ Wall | 90182 | -2.4 | -23.5 | -12.6 | -4.6 | -0.9 | 9.0 | 372.2 |
| Below RCCV | 90111 | -3.1 | -23.5 | -18.5 | 6.5 | 3.0 | -0.9 | 372.2 |
| 25 Slab | 93140 | -7.0 | -29.3 | 26.5 | 70.5 | 62.5 | 87.5 | 372.2 |
| EL4.65m | 93182 | -11.1 | -29.3 | 19.2 | 19.6 | -48.7 | 40.5 | 372.2 |
| @ RCCV | 93111 | -11.0 | -29.3 | -47.1 | 47.9 | 33.3 | 37.3 | 372.2 |
| 26 Slab | 96144 | -4.3 | -29.3 | 68.6 | 82.2 | 90.5 | 96.5 | 372.2 |
| EL17.5m | 96186 | -5.5 | -29.3 | 31.4 | 59.6 | -36.3 | 28.1 | 372.2 |
| @ RCCV | 96113 | -11.1 | -29.3 | -46.8 | 77.0 | -30.2 | 57.0 | 372.2 |
| 27 Slab | 98472 | -10.1 | -29.3 | 146.5 | 121.9 | 139.3 | 94.8 | 372.2 |
| EL27.0m | 98514 | -5.9 | -29.3 | 7.5 | 38.2 | -13.5 | 13.1 | 372.2 |
| @ RCCV | 98424 | -6.7 | -29.3 | -16.0 | -36.3 | -30.0 | -24.6 | 372.2 |
| 28 Pool Girder | 123054 | -8.8 | -29.3 | 14.1 | 69.2 | -43.6 | -2.8 | 372.2 |
| @ Storage Pool | 123154 | -3.5 | -29.3 | 28.6 | 120.8 | 5.1 | 68.3 | 372.2 |
| 29 Pool Girder | 123062 | -1.9 | -29.3 | -13.3 | -11.1 | 33.1 | 10.9 | 372.2 |
| @ Well | 123162 | -2.7 | -29.3 | -19.4 | -19.0 | 15.4 | 3.3 | 372.2 |
| 30 Pool Girder | 123067 | -5.8 | -29.3 | -13.6 | -3.5 | -34.9 | -28.9 | 372.2 |
| @ Buffer Pool | 123167 | -4.2 | -29.3 | -13.2 | -7.5 | -6.7 | -18.4 | 372.2 |
| 31 MS Tunnel | 150122 | -13.6 | -29.3 | 13.9 | 169.6 | -22.8 | 220.5 | 372.2 |
| Wall and Slab | 96611 | -8.6 | -29.3 | 1.4 | 5.1 | -21.2 | 193.7 | 372.2 |
| | 98614 | -6.3 | -29.3 | 2.8 | 2.6 | -3.7 | 151.3 | 372.2 |

*Note: Negative value means compression.*

*Note *:*

| | | |
|---|---|---|
| *Wall Below RCCV* | *Direction 1: Hoop,* | *Direction 2: Vertical* |
| *Exterior Wall* | *Direction 1: Horizontal,* | *Direction 2: Vertical* |
| *Slab/MS Tunnel Slab* | *Direction 1: N-S,* | *Direction 2: E-W* |
| *Pool Girder* | *Direction 1: Horizontal,* | *Direction 2: Vertical* |
| *MS Tunnel Wall* | *Direction 1: Horizontal,* | *Direction 2: Vertical* |
| *Basemat* | *Direction 1: Top; Radial, Bottom; N-S,* | *Direction 2: Top; Circumferential, Bottom; E-W* |

*SI to U.S. Customary units conversion (SI units are the controlling units and U.S. Customary units are for reference only):*
*1 MPa = 145.038 psi*

## Table 3G.1-52 Rebar and Concrete Stresses of RB: Selected Load Combination RB-8a

| Location | Element ID | Concrete Stress (MPa) | | Primary Reinforcement Stress (MPa) | | | | |
|---|---|---|---|---|---|---|---|---|
| | | Calculated | Allowable | Calculated | | | | Allowable |
| | | | | Direction 1* | | Direction 2* | | |
| | | | | In/Top | Out/Bottom | In/Top | Out/Bottom | |
| 18 Wall | 6 | -6.9 | -29.3 | 7.8 | 20.4 | -15.3 | -38.2 | 372.2 |
| Below RCCV | 13 | -6.9 | -29.3 | -1.6 | -2.1 | -16.1 | -39.4 | 372.2 |
| Bottom | 24 | -6.1 | -29.3 | 2.5 | 2.4 | -21.9 | -37.3 | 372.2 |
| 19 Wall Below | 806 | -5.6 | -29.3 | 13.8 | 6.5 | -17.8 | -33.0 | 372.2 |
| Below RCCV | 813 | -6.3 | -29.3 | 2.0 | 2.7 | -21.7 | -37.5 | 372.2 |
| Mid-Height | 824 | -6.9 | -29.3 | 1.2 | 1.2 | -21.8 | -40.5 | 372.2 |
| 20 Wall | 1606 | -15.9 | -29.3 | 34.2 | 81.9 | -63.2 | 41.7 | 372.2 |
| Below RCCV | 1613 | -17.0 | -29.3 | 31.7 | 78.5 | -72.9 | 45.1 | 372.2 |
| Top | 1624 | -16.6 | -29.3 | 41.3 | 91.6 | -80.9 | 45.6 | 372.2 |
| 21 Exterior Wall | 20011 | -5.3 | -29.3 | 32.8 | 21.0 | 52.0 | -16.6 | 372.2 |
| @ EL-11.50 | 20023 | -4.9 | -28.9 | 10.3 | -13.6 | 16.0 | -19.6 | 368.9 |
| to -10.50m | 30010 | -2.9 | -29.3 | 6.2 | -7.2 | 26.5 | -9.9 | 372.2 |
| | 30020 | -2.2 | -29.3 | -5.6 | 3.0 | -7.2 | -13.2 | 372.2 |
| | 40001 | -2.1 | -29.3 | -3.6 | 1.1 | -8.0 | -12.1 | 372.2 |
| | 40011 | -2.4 | -29.3 | 7.1 | -4.5 | 10.7 | -10.8 | 372.2 |
| 22 Exterior Wall | 22011 | -2.6 | -29.3 | 78.5 | 65.3 | 25.0 | 20.3 | 372.2 |
| @ EL4.65 | 22023 | -5.0 | -29.3 | 43.7 | 11.2 | -9.6 | -25.2 | 372.2 |
| to 6.60m | 32010 | -0.7 | -29.3 | 99.7 | 128.5 | 53.6 | 88.2 | 372.2 |
| | 32020 | -3.4 | -29.3 | 9.5 | 40.6 | -9.3 | 44.7 | 372.2 |
| | 42001 | -2.8 | -29.3 | 10.9 | 31.0 | -12.3 | 35.0 | 372.2 |
| | 42011 | -4.8 | -29.3 | 34.4 | 92.9 | -13.8 | 48.0 | 372.2 |
| 23 Exterior Wall | 24211 | -0.8 | -29.3 | 62.4 | 42.0 | 44.7 | 10.5 | 372.2 |
| @ EL22.50 | 24224 | -1.9 | -29.3 | 27.3 | 13.8 | 4.1 | 21.2 | 372.2 |
| to 24.60m | 34210 | -0.4 | -29.3 | 84.1 | 140.0 | 26.6 | 88.9 | 372.2 |
| | 34220 | -3.0 | -29.3 | 33.9 | -6.5 | -12.1 | 29.0 | 372.2 |
| | 44201 | -3.2 | -29.3 | 51.8 | 7.5 | -10.2 | 57.2 | 372.2 |
| 24 Basemat | 90140 | -1.8 | -23.5 | -11.7 | -5.7 | 10.2 | 6.3 | 372.2 |
| @ Wall | 90182 | -1.8 | -23.5 | -9.5 | 23.1 | 5.8 | 5.1 | 372.2 |
| Below RCCV | 90111 | -2.4 | -23.5 | -13.7 | 3.7 | 31.8 | 10.8 | 372.2 |
| 25 Slab | 93140 | -8.7 | -29.3 | 81.5 | 120.6 | 124.1 | 151.8 | 372.2 |
| EL4.65m | 93182 | -11.9 | -29.3 | 60.5 | 72.8 | -57.6 | 28.9 | 372.2 |
| @ RCCV | 93111 | -11.0 | -29.3 | -52.6 | 28.7 | 72.6 | 84.1 | 372.2 |
| 26 Slab | 96144 | -9.9 | -29.3 | 199.3 | 217.4 | 267.3 | 210.2 | 372.2 |
| EL17.5m | 96186 | -7.1 | -29.3 | 114.3 | 132.1 | -27.3 | -23.0 | 372.2 |
| @ RCCV | 96113 | -13.6 | -28.8 | -87.8 | 28.4 | 83.9 | 115.3 | 368.2 |
| 27 Slab | 98472 | -9.8 | -29.1 | 140.2 | 117.5 | 149.6 | 114.6 | 370.3 |
| EL27.0m | 98514 | -6.0 | -29.1 | 38.4 | 86.8 | -3.7 | 53.1 | 370.3 |
| @ RCCV | 98424 | -5.2 | -28.1 | -18.5 | -30.7 | -13.6 | -8.5 | 363.0 |
| 28 Pool Girder | 123054 | -6.8 | -29.0 | 35.9 | 158.0 | 2.2 | 119.9 | 369.8 |
| @ Storage Pool | 123154 | -3.0 | -29.0 | 40.9 | 89.8 | 48.7 | 60.5 | 369.8 |
| 29 Pool Girder | 123062 | -2.8 | -28.4 | 36.1 | 49.4 | 17.1 | 51.3 | 365.0 |
| @ Well | 123162 | -2.1 | -28.4 | 95.4 | 103.3 | 60.5 | 52.6 | 365.0 |
| 30 Pool Girder | 123067 | -5.2 | -28.4 | 2.4 | 28.5 | -16.7 | 20.0 | 365.0 |
| @ Buffer Pool | 123167 | -5.6 | -28.4 | 32.0 | 42.2 | 46.6 | 28.7 | 365.0 |
| 31 MS Tunnel | 150122 | -11.4 | -29.3 | 14.7 | 142.1 | -21.5 | 174.5 | 372.2 |
| Wall and Slab | 96611 | -6.7 | -29.3 | -1.9 | 6.3 | -9.3 | 189.5 | 372.2 |
| | 98614 | -6.4 | -29.3 | 2.2 | 11.6 | -7.0 | 137.5 | 372.2 |

*Note: Negative value means compression.*

*Note *:*

| | | |
|---|---|---|
| *Wall Below RCCV* | *Direction 1: Hoop,* | *Direction 2: Vertical* |
| *Exterior Wall* | *Direction 1: Horizontal,* | *Direction 2: Vertical* |
| *Slab/MS Tunnel Slab* | *Direction 1: N-S,* | *Direction 2: E-W* |
| *Pool Girder* | *Direction 1: Horizontal,* | *Direction 2: Vertical* |
| *MS Tunnel Wall* | *Direction 1: Horizontal,* | *Direction 2: Vertical* |
| *Basemat* | *Direction 1: Top; Radial, Bottom; N-S,* | *Direction 2: Top; Circumferential, Bottom; E-W* |

*SI to U.S. Customary units conversion (SI units are the controlling units and U.S. Customary units are for reference only):*
*1 MPa = 145.038 psi*

## Table 3G.1-53 Rebar and Concrete Stresses of RB: Selected Load Combination RB-8b

| Location | Element ID | Concrete Stress (MPa) | | Primary Reinforcement Stress (MPa) | | | | |
|---|---|---|---|---|---|---|---|---|
| | | Calculated | Allowable | Calculated | | | | Allowable |
| | | | | Direction 1* | | Direction 2* | | |
| | | | | In/Top | Out/Bottom | In/Top | Out/Bottom | |
| 18 Wall | 6 | -7.7 | -29.3 | 0.4 | 2.7 | -9.6 | -40.7 | 372.2 |
| Below RCCV | 13 | -8.2 | -29.3 | -2.1 | -3.1 | -11.4 | -44.7 | 372.2 |
| Bottom | 24 | -7.3 | -29.3 | 1.3 | -2.3 | -15.4 | -41.5 | 372.2 |
| 19 Wall Below | 806 | -6.0 | -29.3 | 12.4 | 6.6 | -14.3 | -34.5 | 372.2 |
| Below RCCV | 813 | -6.8 | -29.3 | 2.5 | 4.6 | -19.8 | -39.8 | 372.2 |
| Mid-Height | 824 | -7.3 | -29.3 | 1.6 | 2.7 | -18.5 | -41.5 | 372.2 |
| 20 Wall | 1606 | -14.2 | -29.3 | 52.6 | 97.4 | -68.0 | 48.3 | 372.2 |
| Below RCCV | 1613 | -16.7 | -29.3 | 46.5 | 94.5 | -81.0 | 52.0 | 372.2 |
| Top | 1624 | -17.9 | -29.3 | 62.3 | 108.0 | -82.1 | 55.4 | 372.2 |
| 21 Exterior Wall | 20011 | -4.7 | -29.3 | 37.4 | 7.9 | 55.3 | -13.0 | 372.2 |
| @ EL-11.50 | 20023 | -4.7 | -28.9 | 8.5 | -13.4 | 14.4 | -18.8 | 368.9 |
| to -10.50m | 30010 | -3.3 | -29.3 | 7.7 | -6.0 | 37.2 | -10.2 | 372.2 |
| | 30020 | -2.4 | -29.3 | -5.8 | 4.2 | -7.1 | -13.5 | 372.2 |
| | 40001 | -2.2 | -29.3 | -3.9 | 2.6 | -7.9 | -12.4 | 372.2 |
| | 40011 | -2.2 | -29.3 | 7.8 | -2.5 | 15.8 | -9.1 | 372.2 |
| 22 Exterior Wall | 22011 | -1.9 | -29.3 | 105.6 | 88.2 | 59.7 | 59.7 | 372.2 |
| @ EL4.65 | 22023 | -4.6 | -29.3 | 45.1 | 9.5 | -6.4 | -22.2 | 372.2 |
| to 6.60m | 32010 | -0.5 | -29.3 | 98.6 | 162.4 | 13.6 | 114.7 | 372.2 |
| | 32020 | -4.1 | -29.3 | 18.6 | 18.1 | -14.7 | 42.6 | 372.2 |
| | 42001 | -1.8 | -29.3 | 32.6 | 13.0 | -4.0 | 22.5 | 372.2 |
| | 42011 | -4.4 | -29.3 | 36.4 | 99.8 | -11.2 | 46.8 | 372.2 |
| 23 Exterior Wall | 24211 | -0.6 | -29.3 | 83.4 | 53.2 | 62.5 | 17.9 | 372.2 |
| @ EL22.50 | 24224 | -3.0 | -29.3 | 54.8 | -5.3 | 22.1 | 14.9 | 372.2 |
| to 24.60m | 34210 | -0.3 | -29.3 | 147.3 | 238.5 | 46.4 | 176.2 | 372.2 |
| | 34220 | -2.4 | -29.3 | 76.3 | -20.0 | -18.3 | 39.6 | 372.2 |
| | 44201 | -2.8 | -29.3 | 82.0 | -8.1 | 19.4 | 40.0 | 372.2 |
| 24 Basemat | 90140 | -1.8 | -23.5 | -11.9 | -4.4 | 1.0 | 7.5 | 372.2 |
| @ Wall | 90182 | -1.9 | -23.5 | -9.0 | 6.8 | 18.5 | 6.0 | 372.2 |
| Below RCCV | 90111 | -2.4 | -23.5 | -13.8 | 4.6 | 18.1 | 9.8 | 372.2 |
| 25 Slab | 93140 | -11.1 | -29.3 | 114.9 | 175.0 | 150.2 | 198.1 | 372.2 |
| EL4.65m | 93182 | -15.5 | -29.3 | 75.9 | 85.8 | -73.2 | 42.6 | 372.2 |
| @ RCCV | 93111 | -14.1 | -29.3 | -65.6 | 43.0 | 86.9 | 95.8 | 372.2 |
| 26 Slab | 96144 | -9.8 | -29.3 | 206.8 | 216.8 | 271.2 | 267.5 | 372.2 |
| EL17.5m | 96186 | -8.9 | -29.3 | 143.4 | 165.8 | -34.0 | 16.1 | 372.2 |
| @ RCCV | 96113 | -13.9 | -28.8 | -88.4 | 19.7 | 103.3 | 128.7 | 368.2 |
| 27 Slab | 98472 | See Tables 3G.5-22 to 3G.5-25 | | | | | | |
| EL27.0m | 98514 | | | | | | | |
| @ RCCV | 98424 | | | | | | | |
| 28 Pool Girder | 123054 | | | | | | | |
| @ Storage Pool | 123154 | | | | | | | |
| 29 Pool Girder | 123062 | | | | | | | |
| @ Well | 123162 | | | | | | | |
| 30 Pool Girder | 123067 | | | | | | | |
| @ Buffer Pool | 123167 | | | | | | | |
| 31 MS Tunnel | 150122 | -11.7 | -29.3 | 16.5 | 133.9 | -25.7 | 166.0 | 372.2 |
| Wall and Slab | 96611 | -6.4 | -29.3 | -2.2 | 3.2 | -6.8 | 192.5 | 372.2 |
| | 98614 | -6.7 | -29.3 | 2.4 | 5.9 | -10.5 | 125.5 | 372.2 |

*Note: Negative value means compression.*

*Note *:*

| | | |
|---|---|---|
| *Wall Below RCCV* | *Direction 1: Hoop,* | *Direction 2: Vertical* |
| *Exterior Wall* | *Direction 1: Horizontal,* | *Direction 2: Vertical* |
| *Slab/MS Tunnel Slab* | *Direction 1: N-S,* | *Direction 2: E-W* |
| *Pool Girder* | *Direction 1: Horizontal,* | *Direction 2: Vertical* |
| *MS Tunnel Wall* | *Direction 1: Horizontal,* | *Direction 2: Vertical* |
| *Basemat* | *Direction 1: Top; Radial; Bottom; N-S,* | *Direction 2: Top; Circumferential; Bottom;E-W* |

*SI to U.S. Customary units conversion (SI units are the controlling units and U.S. Customary units are for reference only):*
*1 MPa = 145.038 psi*

## Table 3G.1-54 Rebar and Concrete Stresses of RB: Selected Load Combination RB-9a

| Location | Element ID | Concrete Stress (MPa) | | Primary Reinforcement Stress (MPa) | | | | |
|---|---|---|---|---|---|---|---|---|
| | | Calculated | Allowable | Calculated | | | | Allowable |
| | | | | Direction 1* | | Direction 2* | | |
| | | | | In/Top | Out/Bottom | In/Top | Out/Bottom | |
| 18 Wall | 6 | -19.3 | -29.3 | 217.6 | 230.5 | 11.2 | 331.3 | 372.2 |
| Below RCCV | 13 | -15.8 | -29.3 | 142.1 | 158.4 | -22.7 | 235.2 | 372.2 |
| Bottom | 24 | -12.8 | -29.3 | 193.3 | 164.1 | 216.3 | 42.3 | 372.2 |
| 19 Wall Below | 806 | -10.4 | -29.3 | 193.7 | 95.0 | 208.1 | 145.8 | 372.2 |
| Below RCCV | 813 | -11.4 | -29.3 | 213.7 | 132.7 | 171.2 | 129.2 | 372.2 |
| Mid-Height | 824 | -12.7 | -29.3 | 272.4 | 163.0 | 202.5 | 132.7 | 372.2 |
| 20 Wall | 1606 | -13.2 | -29.3 | 204.2 | 177.3 | 120.2 | 159.5 | 372.2 |
| Below RCCV | 1613 | -23.9 | -29.3 | 139.0 | 129.0 | -104.9 | 138.3 | 372.2 |
| Top | 1624 | -15.3 | -29.3 | 188.2 | 173.0 | -112.3 | 191.2 | 372.2 |
| 21 Exterior Wall | 20011 | -20.2 | -29.3 | 252.9 | 309.2 | 305.3 | 355.6 | 372.2 |
| @ EL-11.50 | 20023 | -8.8 | -28.9 | 26.3 | -23.3 | 72.0 | -39.7 | 368.9 |
| to -10.50m | 30010 | -9.1 | -29.3 | 130.5 | 119.8 | 60.0 | 187.7 | 372.2 |
| | 30020 | -5.3 | -29.3 | 19.1 | 20.4 | -8.8 | 56.3 | 372.2 |
| | 40001 | -5.6 | -29.3 | 33.2 | 10.1 | -8.5 | 76.1 | 372.2 |
| | 40011 | -7.9 | -29.3 | 143.4 | 130.4 | 82.0 | 184.2 | 372.2 |
| 22 Exterior Wall | 22011 | -13.2 | -29.3 | 250.8 | 199.6 | 327.7 | 210.7 | 372.2 |
| @ EL4.65 | 22023 | -10.1 | -29.3 | 126.1 | 93.6 | 132.8 | 95.1 | 372.2 |
| to 6.60m | 32010 | -6.2 | -29.3 | 285.5 | 258.4 | 306.2 | 283.4 | 372.2 |
| | 32020 | -7.2 | -29.3 | 143.4 | 123.8 | 193.3 | 274.8 | 372.2 |
| | 42001 | -7.5 | -29.3 | 148.3 | 100.0 | 213.2 | 230.4 | 372.2 |
| | 42011 | -8.6 | -29.3 | 207.7 | 178.9 | 269.2 | 206.0 | 372.2 |
| 23 Exterior Wall | 24211 | -8.3 | -29.3 | 228.3 | 206.3 | 272.1 | 215.0 | 372.2 |
| @ EL22.50 | 24224 | -10.7 | -29.3 | 150.0 | 149.1 | 297.3 | 185.6 | 372.2 |
| to 24.60m | 34210 | -5.2 | -29.3 | 234.8 | 224.0 | 174.4 | 196.8 | 372.2 |
| | 34220 | -4.5 | -29.3 | 120.7 | 90.4 | 146.8 | 174.5 | 372.2 |
| | 44201 | -5.1 | -29.3 | 156.3 | 112.0 | 148.8 | 192.3 | 372.2 |
| 24 Basemat | 90140 | -6.9 | -23.5 | 327.4 | 57.6 | 88.0 | 42.9 | 372.2 |
| @ Wall | 90182 | -3.6 | -23.5 | 72.2 | 131.5 | 135.6 | 15.4 | 372.2 |
| Below RCCV | 90111 | -3.4 | -23.5 | 58.7 | -11.7 | 129.4 | 133.6 | 372.2 |
| 25 Slab | 93140 | -11.9 | -29.3 | 172.5 | 162.7 | 94.7 | 164.6 | 372.2 |
| EL4.65m | 93182 | -16.2 | -29.3 | 52.0 | 104.4 | -82.5 | 114.5 | 372.2 |
| @ RCCV | 93111 | -13.4 | -29.3 | -60.7 | 55.6 | 62.2 | 79.8 | 372.2 |
| 26 Slab | 96144 | -11.7 | -29.3 | 212.7 | 203.6 | 211.5 | 237.0 | 372.2 |
| EL17.5m | 96186 | -9.8 | -29.3 | 111.5 | 168.1 | -46.2 | -38.0 | 372.2 |
| @ RCCV | 96113 | -14.1 | -28.8 | -94.5 | 49.0 | 101.8 | 133.6 | 368.2 |
| 27 Slab | 98472 | -13.3 | -29.1 | 144.3 | 144.3 | 136.6 | 150.0 | 370.3 |
| EL27.0m | 98514 | -9.5 | -29.1 | 50.2 | 114.2 | 12.8 | 84.5 | 370.3 |
| @ RCCV | 98424 | -10.4 | -28.1 | 23.7 | -50.6 | -17.9 | -10.8 | 363.0 |
| 28 Pool Girder | 123054 | -8.9 | -29.0 | 30.4 | 149.3 | -28.1 | 108.7 | 369.8 |
| @ Storage Pool | 123154 | -3.0 | -29.0 | 83.7 | 184.9 | 70.1 | 103.8 | 369.8 |
| 29 Pool Girder | 123062 | -2.9 | -28.4 | 40.2 | 37.6 | 40.9 | 47.0 | 365.0 |
| @ Well | 123162 | -2.1 | -28.4 | 88.2 | 63.8 | 45.2 | 50.6 | 365.0 |
| 30 Pool Girder | 123067 | -7.5 | -28.4 | -4.3 | 29.2 | -38.4 | -19.7 | 365.0 |
| @ Buffer Pool | 123167 | -6.6 | -28.4 | 7.9 | 40.2 | 32.9 | 14.8 | 365.0 |
| 31 MS Tunnel | 150122 | -12.4 | -29.3 | 16.7 | 159.7 | -22.0 | 194.2 | 372.2 |
| Wall and Slab | 96611 | -8.2 | -29.3 | -2.1 | 18.2 | -11.1 | 216.4 | 372.2 |
| | 98614 | -7.6 | -29.3 | 4.7 | 30.7 | -6.2 | 165.1 | 372.2 |

*Note: Negative value means compression.*

*Note *:*

| | | |
|---|---|---|
| *Wall Below RCCV* | *Direction 1: Hoop,* | *Direction 2: Vertical* |
| *Exterior Wall* | *Direction 1: Horizontal,* | *Direction 2: Vertical* |
| *Slab/MS Tunnel Slab* | *Direction 1: N-S,* | *Direction 2: E-W* |
| *Pool Girder* | *Direction 1: Horizontal,* | *Direction 2: Vertical* |
| *MS Tunnel Wall* | *Direction 1: Horizontal,* | *Direction 2: Vertical* |
| *Basemat* | *Direction 1: Top; Radial; Bottom; N-S,* | *Direction 2: Top; Circumferential; Bottom; E-W* |

*SI to U.S. Customary units conversion (SI units are the controlling units and U.S. Customary units are for reference only):*
*1 MPa = 145.038 psi*

## Table 3G.1-55 *Rebar and Concrete Stresses of RB: Selected Load Combination RB-9b*

| Location | Element ID | Concrete Stress (MPa) | | Primary Reinforcement Stress (MPa) | | | | |
|---|---|---|---|---|---|---|---|---|
| | | | | Calculated | | | | Allowable |
| | | Calculated | Allowable | Direction 1* | | Direction 2* | | |
| | | | | In/Top | Out/Bottom | In/Top | Out/Bottom | |
| 18 Wall | 6 | -21.1 | -29.3 | 203.9 | 213.6 | 28.6 | 295.0 | 372.2 |
| Below RCCV | 13 | -17.8 | -29.3 | 137.0 | 139.3 | -16.5 | 189.3 | 372.2 |
| Bottom | 24 | -15.2 | -29.3 | 182.9 | 159.3 | 51.2 | 184.3 | 372.2 |
| 19 Wall Below | 806 | -10.9 | -29.3 | 194.4 | 93.1 | 205.7 | 114.1 | 372.2 |
| Below RCCV | 813 | -12.2 | -29.3 | 213.0 | 134.5 | 172.2 | 98.8 | 372.2 |
| Mid-Height | 824 | -13.6 | -29.3 | 269.2 | 161.1 | 210.4 | 110.0 | 372.2 |
| 20 Wall | 1606 | -14.2 | -29.3 | 201.0 | 193.5 | -98.0 | 187.6 | 372.2 |
| Below RCCV | 1613 | -17.1 | -29.3 | 138.7 | 146.2 | -126.0 | 170.0 | 372.2 |
| Top | 1624 | -16.3 | -29.3 | 185.8 | 189.9 | -118.2 | 218.0 | 372.2 |
| 21 Exterior Wall | 20011 | -20.3 | -29.3 | 333.7 | 240.6 | 335.8 | 339.9 | 372.2 |
| @ EL-11.50 | 20023 | -8.7 | -28.9 | 24.9 | -18.6 | 75.8 | -39.6 | 368.9 |
| to -10.50m | 30010 | -9.6 | -29.3 | 133.4 | 121.1 | 71.0 | 182.7 | 372.2 |
| | 30020 | -5.6 | -29.3 | 15.3 | 17.6 | -9.0 | 47.3 | 372.2 |
| | 40001 | -5.9 | -29.3 | 30.5 | 13.0 | -8.8 | 67.2 | 372.2 |
| | 40011 | -7.8 | -29.3 | 146.1 | 137.6 | 88.1 | 188.6 | 372.2 |
| 22 Exterior Wall | 22011 | -11.5 | -29.3 | 352.0 | 272.6 | 313.2 | 356.7 | 372.2 |
| @ EL4.65 | 22023 | -10.0 | -29.3 | 135.4 | 93.8 | 143.5 | 105.1 | 372.2 |
| to 6.60m | 32010 | -6.3 | -29.3 | 302.1 | 268.8 | 310.7 | 277.2 | 372.2 |
| | 32020 | -6.4 | -29.3 | 109.7 | 161.6 | 195.9 | 274.2 | 372.2 |
| | 42001 | -7.8 | -29.3 | 127.9 | 128.4 | 194.9 | 225.9 | 372.2 |
| | 42011 | -8.5 | -29.3 | 212.6 | 187.7 | 276.7 | 212.7 | 372.2 |
| 23 Exterior Wall | 24211 | -8.1 | -29.3 | 293.3 | 195.1 | 304.3 | 228.9 | 372.2 |
| @ EL22.50 | 24224 | -8.3 | -29.3 | 252.4 | 50.2 | 255.1 | 292.4 | 372.2 |
| to 24.60m | 34210 | -5.2 | -29.3 | 298.3 | 333.3 | 193.2 | 300.3 | 372.2 |
| | 34220 | -6.7 | -29.3 | 161.3 | 67.2 | 161.1 | 122.2 | 372.2 |
| | 44201 | -5.0 | -29.3 | 209.1 | 79.4 | 198.3 | 196.7 | 372.2 |
| 24 Basemat | 90140 | -7.2 | -23.5 | 303.4 | 57.4 | 87.0 | 41.3 | 372.2 |
| @ Wall | 90182 | -4.1 | -23.5 | 47.2 | 91.2 | 198.5 | 17.9 | 372.2 |
| Below RCCV | 90111 | -4.0 | -23.5 | 66.7 | 11.8 | 181.0 | 89.8 | 372.2 |
| 25 Slab | 93140 | -14.3 | -29.3 | 188.3 | 201.0 | 156.2 | 212.5 | 372.2 |
| EL4.65m | 93182 | -20.2 | -29.3 | 68.4 | 120.7 | -97.3 | 130.3 | 372.2 |
| @ RCCV | 93111 | -16.6 | -29.3 | -74.0 | 71.0 | 76.8 | 93.6 | 372.2 |
| 26 Slab | 96144 | -11.7 | -29.3 | 195.6 | 254.3 | 257.4 | 274.0 | 372.2 |
| EL17.5m | 96186 | -11.8 | -29.3 | 137.9 | 206.5 | -58.6 | 52.9 | 372.2 |
| @ RCCV | 96113 | -15.0 | -28.8 | -97.7 | 39.0 | 122.4 | 150.2 | 368.2 |
| 27 Slab | 98472 | See Tables 3G.5-26 to 3G.5-29 | | | | | | |
| EL27.0m | 98514 | | | | | | | |
| @ RCCV | 98424 | | | | | | | |
| 28 Pool Girder | 123054 | | | | | | | |
| @ Storage Pool | 123154 | | | | | | | |
| 29 Pool Girder | 123062 | | | | | | | |
| @ Well | 123162 | | | | | | | |
| 30 Pool Girder | 123067 | | | | | | | |
| @ Buffer Pool | 123167 | | | | | | | |
| 31 MS Tunnel | 150122 | -12.7 | -29.3 | 18.3 | 151.6 | -26.1 | 185.7 | 372.2 |
| Wall and Slab | 96611 | -8.0 | -29.3 | -2.3 | 16.2 | -8.9 | 220.3 | 372.2 |
| | 98614 | -7.6 | -29.3 | 5.1 | 18.4 | -12.2 | 136.9 | 372.2 |

*Note: Negative value means compression.*

*Note *: Wall Below RCCV — Direction 1: Hoop, Direction 2: Vertical*
*Exterior Wall — Direction 1: Horizontal, Direction 2: Vertical*
*Slab/MS Tunnel Slab — Direction 1: N-S, Direction 2: E-W*
*Pool Girder — Direction 1: Horizontal, Direction 2: Vertical*
*MS Tunnel Wall — Direction 1: Horizontal, Direction 2: Vertical*
*Basemat — Direction 1: Top; Radial; Bottom; N-S, Direction 2: Top; Circumferential; Bottom; E-W SI to U.S. Customary units conversion (SI units are the controlling units and U.S. Customary units are for reference only): 1 MPa = 145.038 psi*

## Table 3G.1-56 Transverse Shear of RB

| Location | Element ID | Load ID | d (m) | pv (%) | Shear Force (MN/m) Vu | Vc | Vs | ϕVn | Vu/ϕVn |
|---|---|---|---|---|---|---|---|---|---|
| 18 Wall | 6 | RB-9a | 1.59 | 0.721 | 2.73 | 0.30 | 4.73 | 4.28 | 0.637 |
| Below RCCV | 13 | RB-9a | 1.59 | 0.721 | 2.09 | 0.57 | 4.73 | 4.51 | 0.464 |
| Bottom | 24 | RB-9b | 1.59 | 0.721 | 1.08 | 0.94 | 4.74 | 4.83 | 0.223 |
| 19 Wall Below | 806 | RB-9a | 1.57 | 0.270 | 0.12 | 0.14 | 1.75 | 1.61 | 0.075 |
| Below RCCV | 813 | RB-9b | 1.57 | 0.270 | 0.18 | 0.22 | 1.75 | 1.67 | 0.109 |
| Mid-Height | 824 | RB-9a | 1.57 | 0.270 | 0.22 | 0.25 | 1.75 | 1.71 | 0.126 |
| 20 Wall | 1606 | RB-9b | 1.57 | 0.540 | 2.68 | 1.46 | 3.50 | 4.21 | 0.636 |
| Below RCCV | 1613 | RB-8b | 1.57 | 0.540 | 4.69 | 4.26 | 3.50 | 6.59 | 0.711 |
| Top | 1624 | RB-9b | 1.57 | 0.540 | 3.41 | 2.34 | 3.50 | 4.96 | 0.689 |
| 21 Exterior Wall | 20011 | RB-9b | 1.63 | 0.484 | 3.81 | 1.96 | 3.27 | 4.44 | 0.856 |
| @ EL-11.50 | 20023 | RB-9b | 1.59 | 0.484 | 2.06 | 3.31 | 3.18 | 5.52 | 0.373 |
| to -10.50m | 30010 | RB-9b | 1.68 | 0.710 | 0.88 | 0.57 | 4.93 | 4.67 | 0.187 |
| | 30020 | RB-9a | 1.71 | 0.710 | 0.82 | 3.30 | 5.02 | 7.07 | 0.116 |
| | 40001 | RB-9a | 1.71 | 0.710 | 1.07 | 3.47 | 5.02 | 7.21 | 0.148 |
| | 40011 | RB-9a | 1.72 | 0.710 | 0.14 | 0.17 | 5.04 | 4.43 | 0.032 |
| 22 Exterior Wall | 22011 | RB-9b | 1.19 | 0.484 | 1.11 | 0.00 | 2.38 | 2.02 | 0.549 |
| @ EL4.65 | 22023 | RB-9a | 1.18 | 0.484 | 0.75 | 3.71 | 2.36 | 5.16 | 0.146 |
| to 6.60m | 32010 | RB-9b | 1.24 | 0.177 | 0.33 | 0.00 | 0.91 | 0.77 | 0.424 |
| | 32020 | RB-8a | 1.24 | 0.177 | 0.11 | 0.13 | 0.90 | 0.88 | 0.123 |
| | 42001 | RB-4 | 1.19 | 0.242 | 0.18 | 0.21 | 1.19 | 1.19 | 0.150 |
| | 42011 | RB-4 | 1.22 | 0.242 | 0.03 | 0.04 | 1.22 | 1.07 | 0.031 |
| 23 Exterior Wall | 24211 | RB-9a | 1.15 | 0.484 | 1.50 | 0.00 | 2.30 | 1.96 | 0.769 |
| @ EL22.50 | 24224 | RB-9b | 1.19 | 0.968 | 1.30 | 0.02 | 4.65 | 3.97 | 0.327 |
| to 24.60m | 34210 | RB-9b | 1.24 | 0.177 | 0.26 | 0.00 | 0.91 | 0.77 | 0.340 |
| | 34220 | RB-8a | 1.26 | 0.710 | 0.24 | 0.28 | 3.69 | 3.37 | 0.070 |
| | 44201 | RB-4 | 1.26 | 0.968 | 2.41 | 0.95 | 4.89 | 4.96 | 0.485 |
| 24 Basemat | 90140 | RB-9b | 3.53 | 0.801 | 10.74 | 7.16 | 11.69 | 16.03 | 0.670 |
| @ Wall | 90182 | RB-9b | 3.51 | 0.801 | 7.41 | 6.13 | 11.64 | 15.10 | 0.491 |
| Below RCCV | 90111 | RB-9b | 3.37 | 0.801 | 2.64 | 1.67 | 11.15 | 10.90 | 0.242 |
| 25 Slab | 93140 | RB-9b | 0.80 | 0.500 | 0.37 | 0.22 | 1.65 | 1.58 | 0.231 |
| EL4.65m | 93182 | RB-9b | 0.80 | 0.500 | 2.35 | 1.50 | 1.65 | 2.68 | 0.877 |
| @ RCCV | 93111 | RB-9b | 0.80 | 0.500 | 1.68 | 2.05 | 1.65 | 3.14 | 0.533 |
| 26 Slab | 96144 | RB-9a | 0.80 | 0.500 | 0.07 | 0.08 | 1.65 | 1.47 | 0.046 |
| EL17.5m | 96186 | RB-9b | 0.80 | 0.500 | 1.15 | 2.13 | 1.65 | 3.21 | 0.359 |
| @ RCCV | 96113 | RB-4 | 1.34 | 0.500 | 0.82 | 1.54 | 2.76 | 3.66 | 0.225 |
| 27 Slab | 98472 | RB-9a | 0.63 | 0.500 | 1.45 | 1.69 | 1.29 | 2.53 | 0.572 |
| EL27.0m | 98514 | See Table 3G.5-31 | | | | | | | |
| @ RCCV | 98424 | | | | | | | | |
| 28 Pool Girder | 123054 | | | | | | | | |
| @ Storage Pool | 123154 | | | | | | | | |
| 29 Pool Girder | 123062 | RB-9a | 1.25 | 0.242 | 0.12 | 0.15 | 1.25 | 1.19 | 0.105 |
| @ Well | 123162 | RB-8a | 1.23 | 0.242 | 0.09 | 0.11 | 1.23 | 1.13 | 0.081 |
| 30 Pool Girder | 123067 | RB-9b | 1.25 | 0.484 | 1.10 | 3.75 | 2.49 | 5.31 | 0.207 |
| @ Buffer Pool | 123167 | RB-8a | 1.24 | 0.484 | 0.21 | 0.25 | 2.48 | 2.32 | 0.092 |
| 31 MS Tunnel | 150122 | RB-9a | 1.04 | 0.177 | 0.04 | 0.04 | 0.76 | 0.68 | 0.053 |
| Wall and Slab | 96611 | RB-9a | 1.34 | 0.500 | 0.47 | 1.60 | 2.76 | 3.70 | 0.126 |
| | 98614 | RB-9b | 2.14 | 0.500 | 0.23 | 0.27 | 4.42 | 3.99 | 0.058 |

*SI to U.S. Customary units conversion (SI units are the controlling units and U.S. Customary units are for reference only):*
*1 MN/m = 6.852x10$^4$ lbf/ft*
*1 m = 3.28 ft*

## *Table 3G.1-57 Factors of Safety for Foundation Stability*

| Load Combination | Overturning | | Sliding | | Floatation | |
|---|---|---|---|---|---|---|
| | Required | Actual | Required | Actual | Required | Actual |
| D + H + E' | 1.1 | 111.1 | 1.1 | 1.10 | -- | -- |
| D + F' | -- | -- | -- | -- | 1.1 | 3.48 |

*Where,*
*D = Dead Load*
*H = Lateral soil pressure*
*E' = Safe Shutdown Earthquake*
*F' = Buoyant forces of design basis flood*

## Table 3G.1-57a *Stresses of RB External Walls against Wall Capacity Passive Pressure: Selected Load Combination RB-9a*

| Location | Element ID | Concrete Stress (MPa) | | Primary Reinforcement Stress (MPa) | | | | |
|---|---|---|---|---|---|---|---|---|
| | | Calculated | Allowable | Calculated | | | | Allowable |
| | | | | Direction 1* | | Direction 2* | | |
| | | | | In/Top | Out/Bottom | In/Top | Out/Bottom | |
| 21 Exterior Wall @ EL-11.50 to -10.50m | 30010 | -7.6 | -29.3 | 147.4 | 128.8 | 282.1 | 90.1 | 372.2 |
| | 30020 | -5.6 | -29.3 | 15.6 | 60.2 | -9.0 | 74.5 | 372.2 |
| | 40001 | -6.8 | -29.3 | 36.8 | 40.2 | 22.5 | 82.5 | 372.2 |
| | 40011 | -9.0 | -29.3 | 124.1 | 125.5 | 291.7 | 104.1 | 372.2 |

*Note: Negative value means compression.*
*Note*: Direction 1 is horizontal. Direction 2 is vertical.*

## Table 3G.1-57b Stresses of RB External Walls against Wall Capacity Passive Pressure: Selected Load Combination RB-9b

| Location | Element ID | Concrete Stress (MPa) | | Primary Reinforcement Stress (MPa) | | | | |
|---|---|---|---|---|---|---|---|---|
| | | Calculated | Allowable | Calculated | | | | Allowable |
| | | | | Direction 1* | | Direction 2* | | |
| | | | | In/Top | Out/Bottom | In/Top | Out/Bottom | |
| 21 Exterior Wall @ EL-11.50 to -10.50m | 30010 | -5.5 | -29.3 | 250.9 | 117.9 | 365.7 | 14.4 | 372.2 |
| | 30020 | -5.8 | -29.3 | 11.1 | 58.2 | -9.1 | 65.3 | 372.2 |
| | 40001 | -6.5 | -29.3 | 8.3 | 64.8 | 6.5 | 93.3 | 372.2 |
| | 40011 | -7.1 | -29.3 | 235.7 | 112.3 | 362.7 | 59.8 | 372.2 |

*Note: Negative value means compression.*
*Note*: Direction 1 is horizontal. Direction 2 is vertical.*

## Table 3G.1-57c Transverse Shear of RB External Walls

| Location | Element ID | Load ID | d (m) | pv (%) | Shear Force (MN/m) | | | | Vu/ϕVn |
|---|---|---|---|---|---|---|---|---|---|
| | | | | | Vu | Vc | Vs | ϕVn | |
| 21 Exterior Wall @ EL-11.50 to -10.50m | 30010 | RB-9a | 1.69 | 0.710 | 2.29 | 0.07 | 4.97 | 4.29 | 0.533 |
| | 30020 | RB-9a | 1.71 | 0.710 | 0.76 | 1.08 | 5.02 | 5.18 | 0.146 |
| | 40001 | RB-9a | 1.71 | 0.710 | 1.19 | 1.03 | 5.03 | 5.15 | 0.230 |
| | 40011 | RB-9a | 1.69 | 0.710 | 2.98 | 0.29 | 4.97 | 4.47 | 0.667 |

## Table 3G.1-57d Stresses of FB External Walls against Wall Capacity Passive Pressure: Selected Load Combination FB-9

| Location | Element ID | Concrete Stress (MPa) | | Primary Reinforcement Stress (MPa) | | | | |
|---|---|---|---|---|---|---|---|---|
| | | Calculated | Allowable | Calculated | | | | Allowable |
| | | | | Direction 1* | | Direction 2* | | |
| | | | | In/Top | Out/Bottom | In/Top | Out/Bottom | |
| 1 Exterior Wall and Pool Wall Bottom | 60011 | -12.8 | -29.3 | 264.4 | 158.3 | 303.6 | 96.4 | 372.2 |
| | 60219 | -27.8 | -28.5 | -36.7 | 319.5 | -96.6 | 263.1 | 366.4 |
| | 70201 | -22.7 | -28.3 | -21.3 | 341.8 | -41.6 | 295.7 | 364.6 |
| | 70204 | -20.5 | -28.3 | -34.2 | 354.5 | -56.4 | 363.9 | 364.6 |
| 4 Spent Fuel Pool Wall @ EL-5.10 to -3.30r | 60819 | -16.1 | -28.5 | -47.4 | 169.0 | -53.7 | 179.8 | 366.4 |
| | 70801 | -19.6 | -28.3 | -15.5 | 329.6 | -36.0 | 250.0 | 364.6 |
| | 70804 | -20.6 | -28.3 | -46.5 | 216.9 | -57.8 | 215.5 | 364.6 |

*Note: Negative value means compression.*
*Note*: Direction 1 is horizontal. Direction 2 is vertical.*

## Table 3G.1-57e *Transverse Shear of FB External Walls*

| Location | Element ID | Load ID | d (m) | pv (%) | Shear Force (MN/m) | | | | Vu/ϕVn |
|---|---|---|---|---|---|---|---|---|---|
| | | | | | Vu | Vc | Vs | ϕVn | |
| 1 Exterior Wall and Pool Wall Bottom | 60011 | FB-9 | 1.69 | 0.710 | 1.66 | 1.00 | 4.97 | 5.07 | 0.328 |
| | 60219 | FB-9 | 3.05 | 0.710 | 7.51 | 3.93 | 8.96 | 10.95 | 0.686 |
| | 70201 | FB-9 | 1.62 | 0.710 | 1.37 | 0.00 | 4.75 | 4.04 | 0.339 |
| | 70204 | FB-9 | 1.59 | 0.710 | 2.04 | 0.09 | 4.68 | 4.05 | 0.504 |
| 4 Spent Fuel Pool Wall @ EL-5.10 to -3.30r | 60819 | FB-8 | 3.05 | 0.710 | 2.07 | 3.26 | 8.96 | 10.39 | 0.199 |
| | 70801 | FB-9 | 1.71 | 0.710 | 2.12 | 1.45 | 5.03 | 5.51 | 0.385 |
| | 70804 | FB-9 | 1.61 | 0.710 | 0.65 | 2.09 | 4.72 | 5.79 | 0.112 |

## Table 3G.1-58 Maximum Dynamic Soil Bearing Pressure Involving SSE + Static

| | Site Condition[1] | | |
|---|---|---|---|
| | Soft ($V_s$ = 300 m/sec) | Medium ($V_s$ = 800 m/sec) | Hard ($V_s \geq$ 1700 m/sec) |
| Bearing Stress (MPa) | 1.1 | 2.7 | 1.1 |

*(1) See Table 3A.3-1 for site properties. For site specific application, use the larger value or a linearly interpolated value of the applicable range of shear wave velocities at the foundation level.*

*SI to U.S. Customary units conversion (SI units are the controlling units and U.S. Customary units are for reference only):*
*1 MPa = 145.038 psi*
*1 m/sec = 3.28 ft/sec*

## Table 3G.1-59 Stress Calculation Results for Basemat Uplift Analysis

| Seismic Force Direction | Soil Condition | Element ID | Load | Concrete Stress (MPa) | | Primary Reinforcement Stress (MPa) | | | | |
|---|---|---|---|---|---|---|---|---|---|---|
| | | | | Calculated | Allowable | Radial | | Circumferential | | Allowable |
| | | | | | | Top | Bottom | Top | Bottom | |
| S to N | Soft | 80275 | SSE+LOCA 6min | -7.8 | -23.5 | -45.2 | 8.6 | -7.2 | 17.2 | 372.2 |
| | | | SSE+LOCA 72h | -8.8 | -23.5 | -49.8 | 15.4 | -8.2 | 28.1 | 372.2 |
| | | 90402 | SSE+LOCA 6min | -5.0 | -23.5 | -27.0 | 17.7 | 54.5 | 42.9 | 372.2 |
| | | | SSE+LOCA 72h | -4.0 | -23.5 | -18.9 | 10.1 | 58.3 | 40.2 | 372.2 |
| | | 90408 | SSE+LOCA 6min | -3.0 | -23.5 | 19.0 | -10.3 | 51.6 | -3.2 | 372.2 |
| | | | SSE+LOCA 72h | -3.0 | -23.5 | 17.5 | -10.5 | 51.7 | -3.0 | 372.2 |

| Seismic Force Direction | Soil Condition | Element ID | Load | Concrete Stress (MPa) | | Primary Reinforcement Stress (MPa) | | | | |
|---|---|---|---|---|---|---|---|---|---|---|
| | | | | Calculated | Allowable | Radial | | Circumferential | | Allowable |
| | | | | | | Top | Bottom | Top | Bottom | |
| W to E | Soft | 80262 | SSE+LOCA 6min | -17.9 | -23.5 | -58.7 | 175.6 | -20.4 | 191.1 | 372.2 |
| | | | SSE+LOCA 72h | -18.4 | -23.5 | -60.8 | 183.5 | -20.2 | 193.4 | 372.2 |
| | | 80462 | SSE+LOCA 6min | -12.0 | -23.5 | 227.7 | -9.8 | 11.5 | -48.2 | 372.2 |
| | | | SSE+LOCA 72h | -11.5 | -23.5 | 225.6 | -8.4 | -11.5 | -47.2 | 372.2 |
| E to W | Soft | 80287 | SSE+LOCA 6min | -14.6 | -23.5 | -49.1 | 140.8 | -14.6 | 149.7 | 372.2 |
| | | | SSE+LOCA 72h | -15.3 | -23.5 | -52.1 | 147.2 | -15.4 | 150.4 | 372.2 |
| | | 80462 | SSE+LOCA 6min | -8.5 | -23.5 | -43.9 | 166.6 | 71.4 | 113.5 | 372.2 |
| | | | SSE+LOCA 72h | -9.0 | -23.5 | -43.9 | 175.4 | 64.9 | 123.6 | 372.2 |

*Note: Because the seismic force in N to S direction does not cause the basemat uplift, its calculation result is not included in this table. Refer to Figure 3G.1-60.*

*SI to U.S. Customary units conversion (SI units are the controlling units and U.S. Customary units are for reference only): 1 MPa = 145.038 psi*

***Table 3G.1-60 (Deleted)***

***Figure 3G.1-1. RB and FB Concrete Outline Plan at EL -11500***

{{{Security-Related Information - Withheld Under 10 CFR Part 2.390}}}

***Figure 3G.1-2.*** **RB and FB Concrete Outline Plan at EL 4650**

*{{{Security-Related Information - Withhold Under 10 CFR 2.390}}}*

***Figure 3G.1-3. RB and FB Concrete Outline Plan at EL 17500***

*{{{Security-Related Information - Withhold Under 10 CFR 2.390}}}*

**Figure 3G.1-4. *RB and FB Concrete Outline Plan at EL 27000***

*{{{Security-Related Information - Withhold Under 10 CFR 2.390}}}*

***Figure 3G.1-5. RB Concrete Outline Plan at EL 34000***

*{{{Security-Related Information - Withhold Under 10 CFR 2.390}}}*

***Figure 3G.1-6. RB and FB Concrete Outline N-S Section***

*{{{Security-Related Information - Withhold Under 10 CFR 2.390}}}*

***Figure 3G.1-7. RB and FB Concrete Outline E-W Section***

*{{{Security-Related Information - Withhold Under 10 CFR 2.390}}}*

***Figure 3G.1-8. Finite Element Model of RB/FB (Isometric View)***

*{{{Security-Related Information - Withhold Under 10 CFR 2.390}}}*

***Figure 3G.1-9. Finite Element Model of RB/FB (Foundation Mat)***

*{{{Security-Related Information - Withhold Under 10 CFR 2.390}}}*

***Figure 3G.1-10. Finite Element Model of RB/FB (RCCV Wall)***

*{{{Security-Related Information - Withhold Under 10 CFR 2.390}}}*

***Figure 3G.1-11. Finite Element Model of RB/FB (RPV Pedestal)***

*{{{Security-Related Information - Withhold Under 10 CFR 2.390}}}*

***Figure 3G.1-12. Finite Element Model of RB/FB (Top Slab)***

*{{{Security-Related Information - Withhold Under 10 CFR 2.390}}}*

***Figure 3G.1-13. Finite Element Model of RB/FB (Suppression Pool Slab)***

*{{{Security-Related Information - Withhold Under 10 CFR 2.390}}}*

***Figure 3G.1-14. Finite Element Model of RB/FB (External Wall: North Side)***

*{{{Security-Related Information - Withhold Under 10 CFR 2.390}}}*

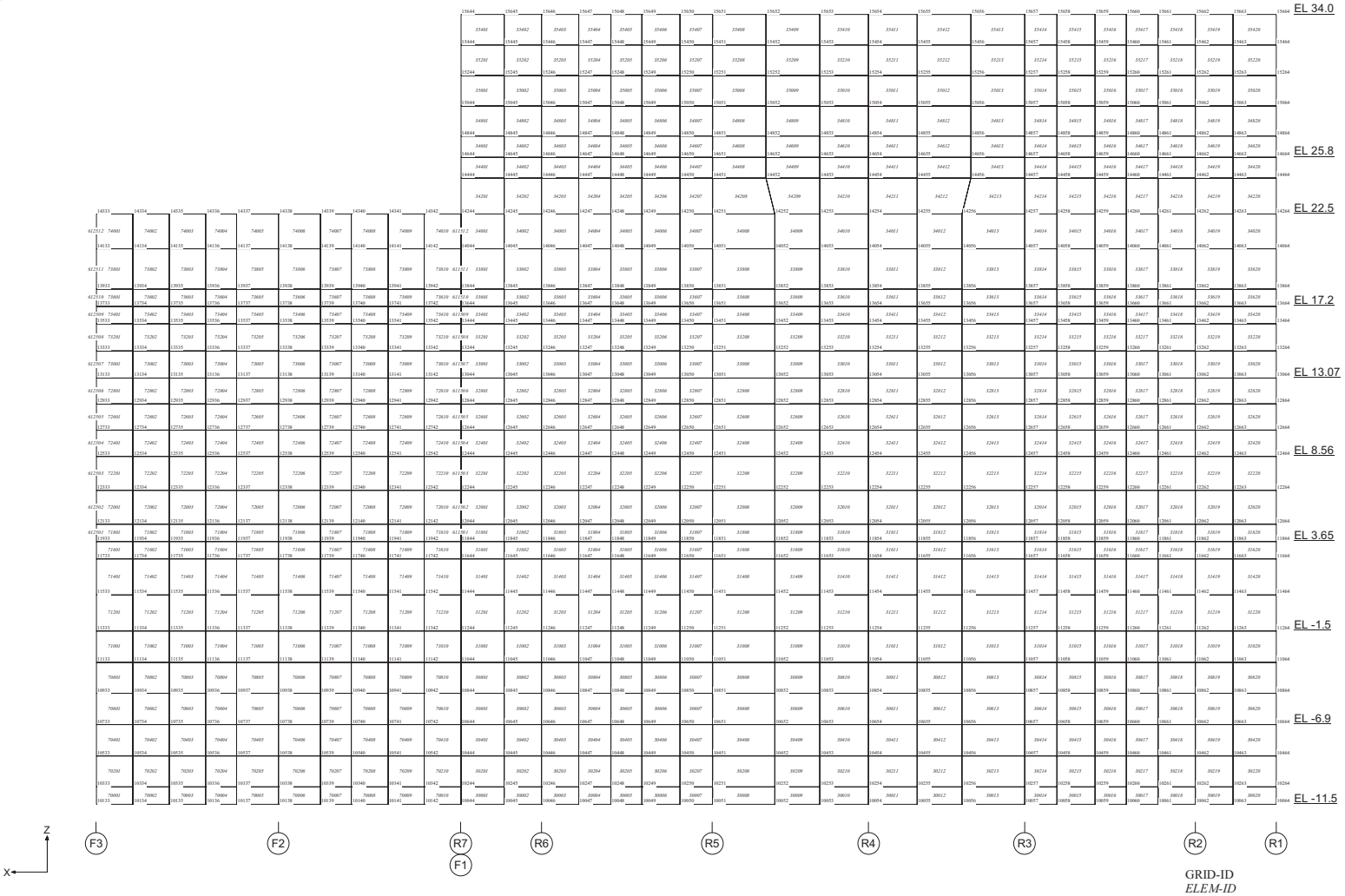


*Figure 3G.1-15. Finite Element Model of RB/FB (External Wall: East Side)*

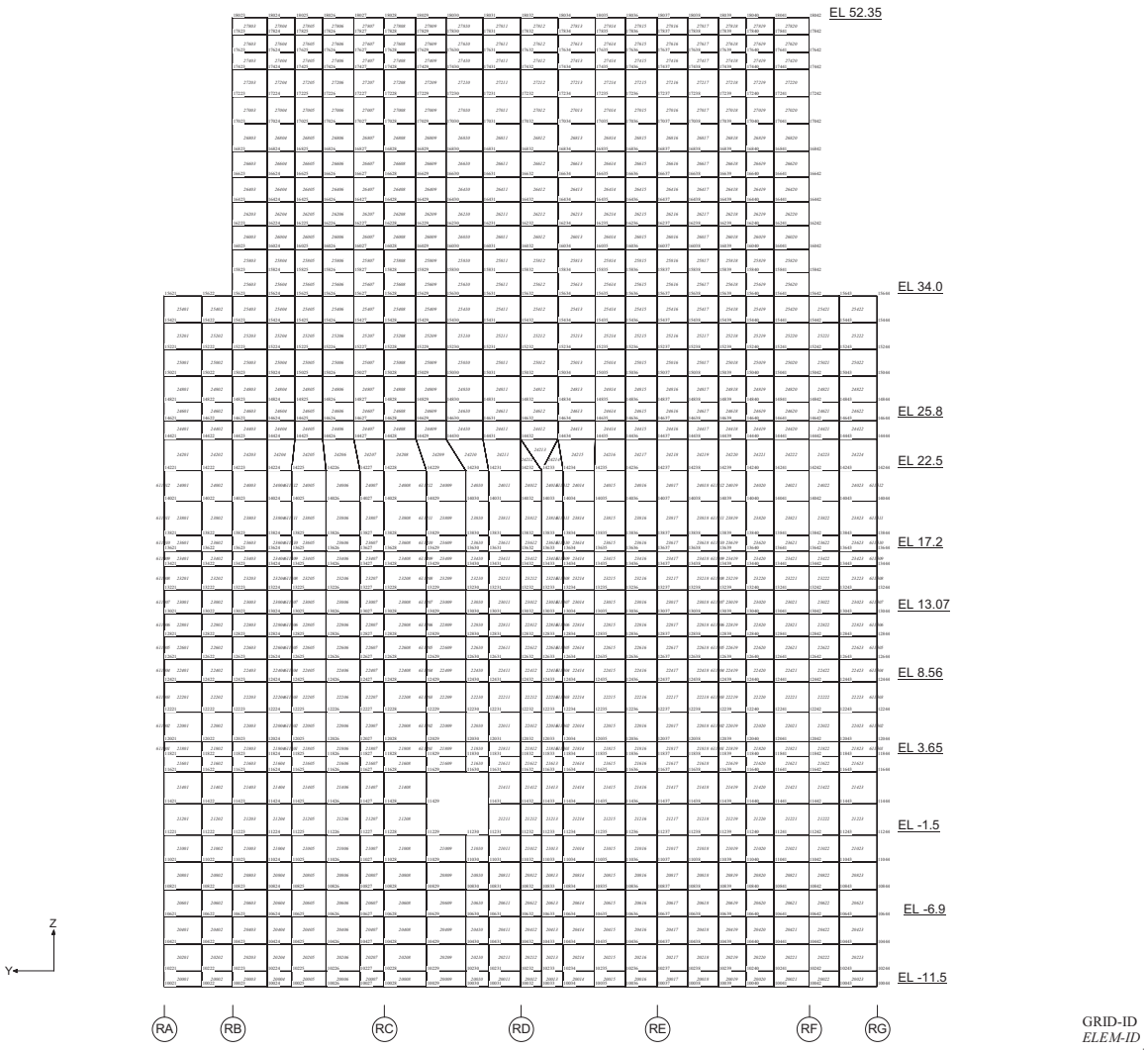


*Figure 3G.1-16. Finite Element Model of RB/FB (Internal Wall on R7/F1 Column Line)*

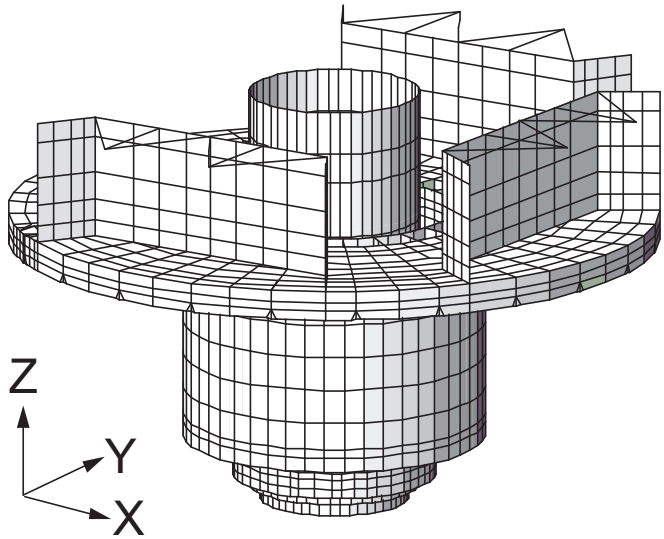


*Whole View*

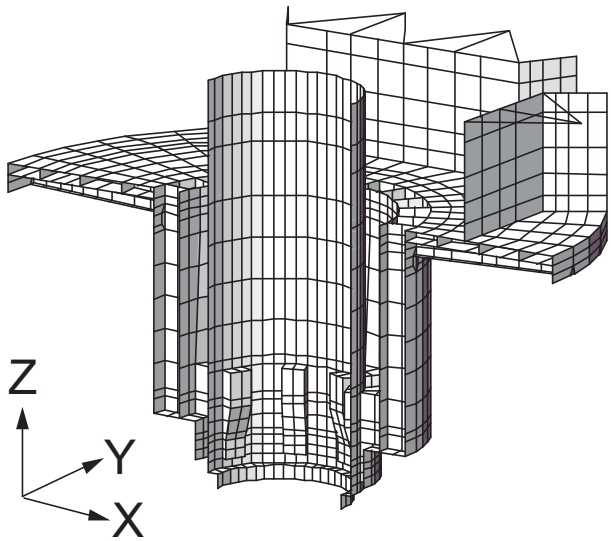


*Cut View*

**Figure 3G.1-17. Finite Element Model of RB/FB (RCCV Internals)**

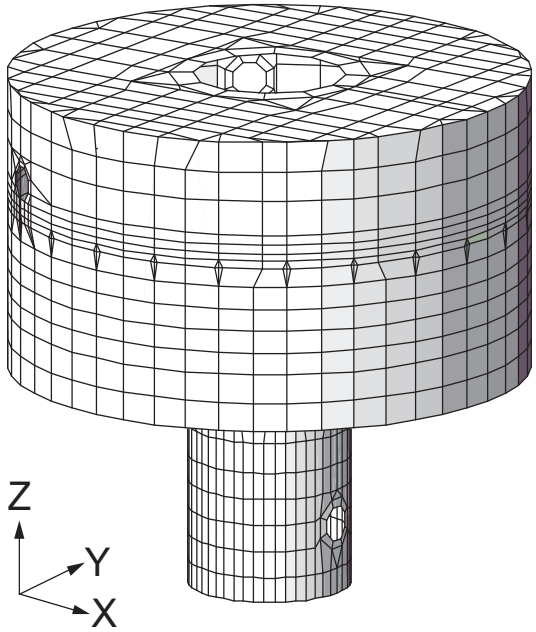


*Whole View*

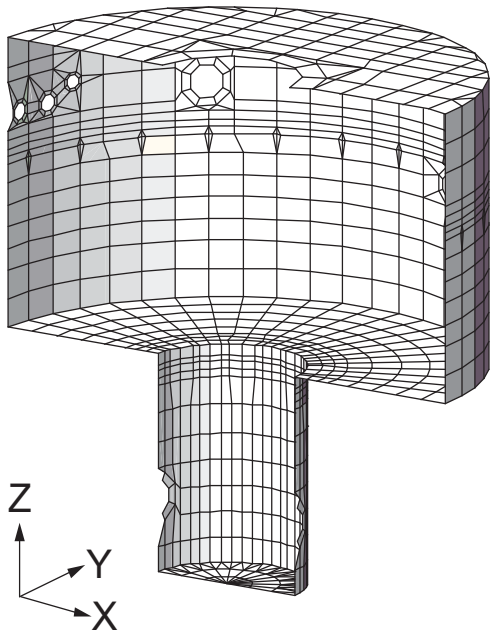


*Cut View*

**Figure 3G.1-18.** ***Finite Element Model of RB/FB (RCCV Liner)***

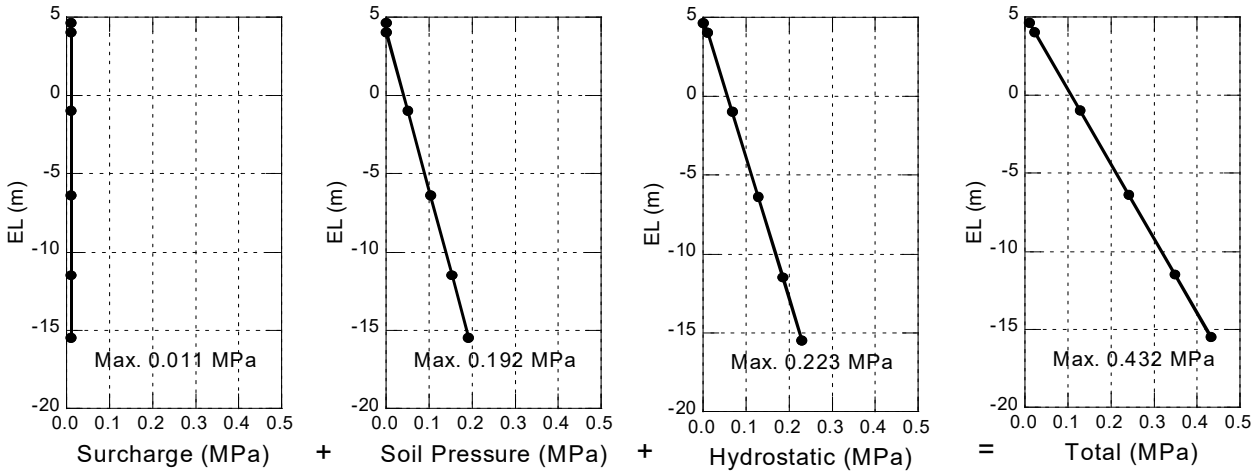


*Figure 3G.1-19. Soil Pressure at Rest*

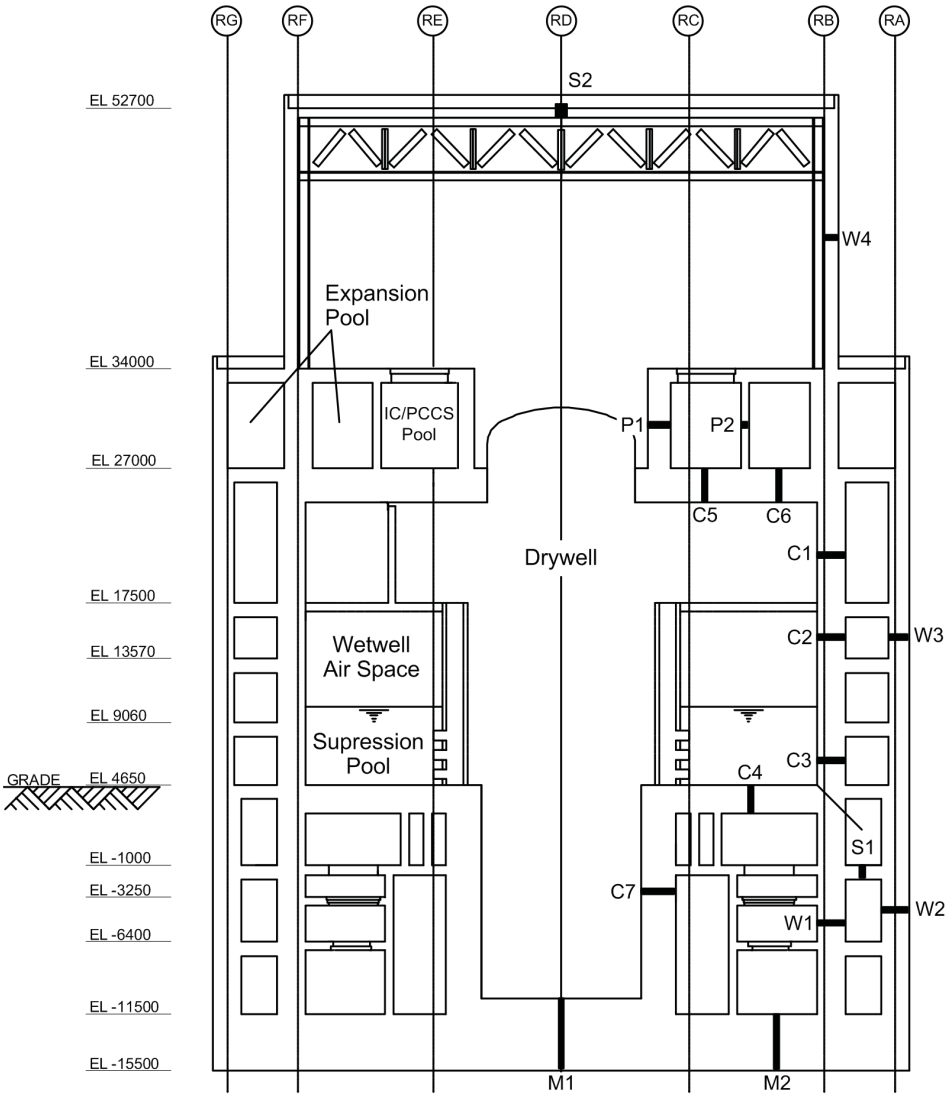


*Figure 3G.1-20. Sections Where Thermal Loads Are Defined*

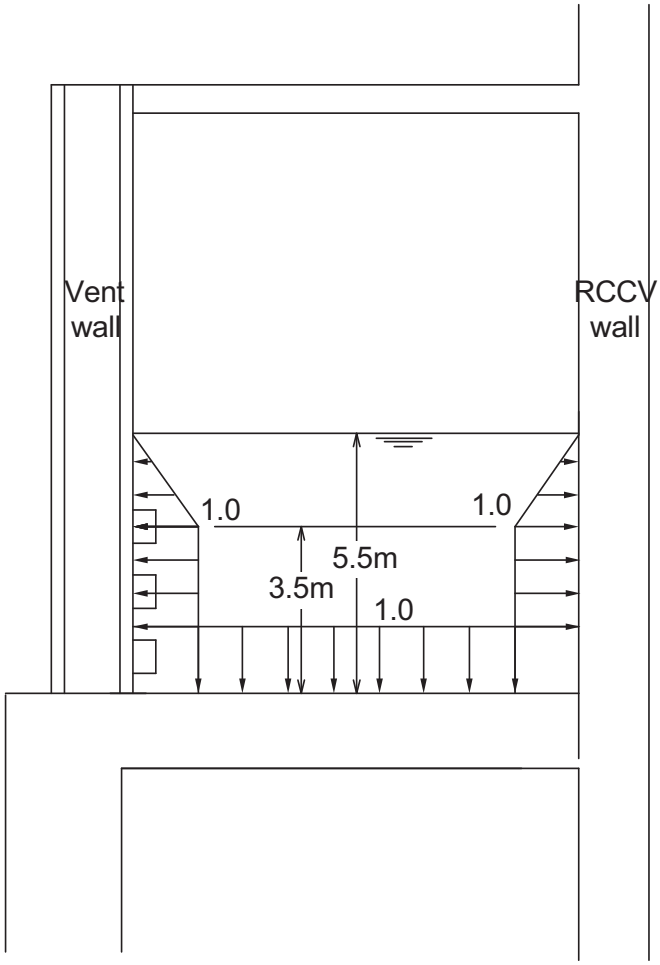


*CO Peak Positive Pressure = 186 kPaG*
*CO Peak Negative Pressure = -186 kPaG*
*Dynamic Load Factor (DLF) = 2.0*

***Figure 3G.1-21. Condensation Oscillation (CO) Pressure Loads***

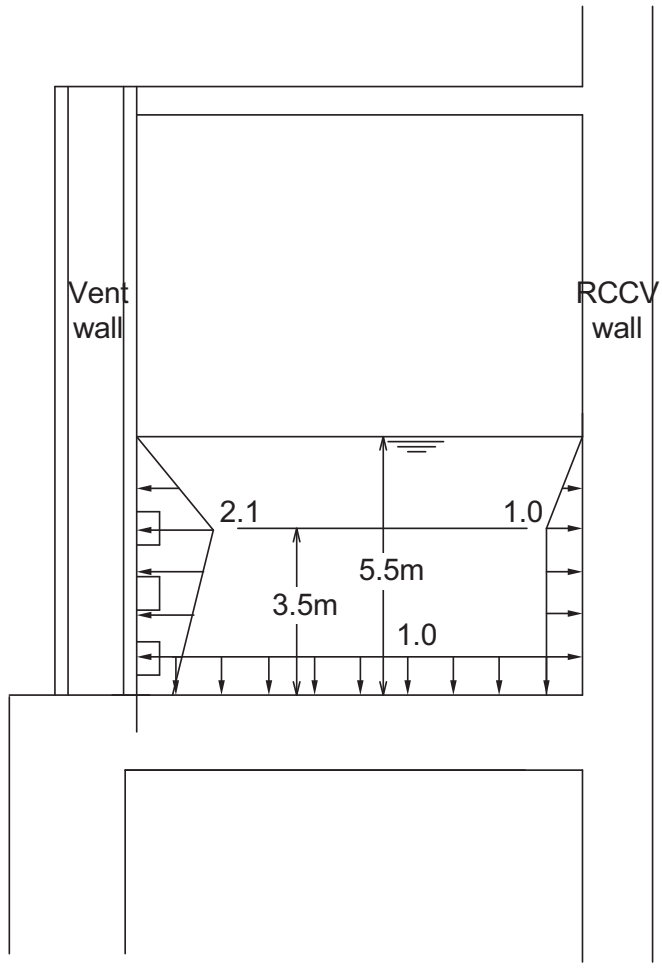


*CHUG Peak Positive Pressure = 91 kPaG*
*CHUG Peak Negative Pressure = -66 kPaG*
*Dynamic Load Factor (DLF) = 2.0*

***Figure 3G.1-22. Chugging (CHUG) Pressure Loads***

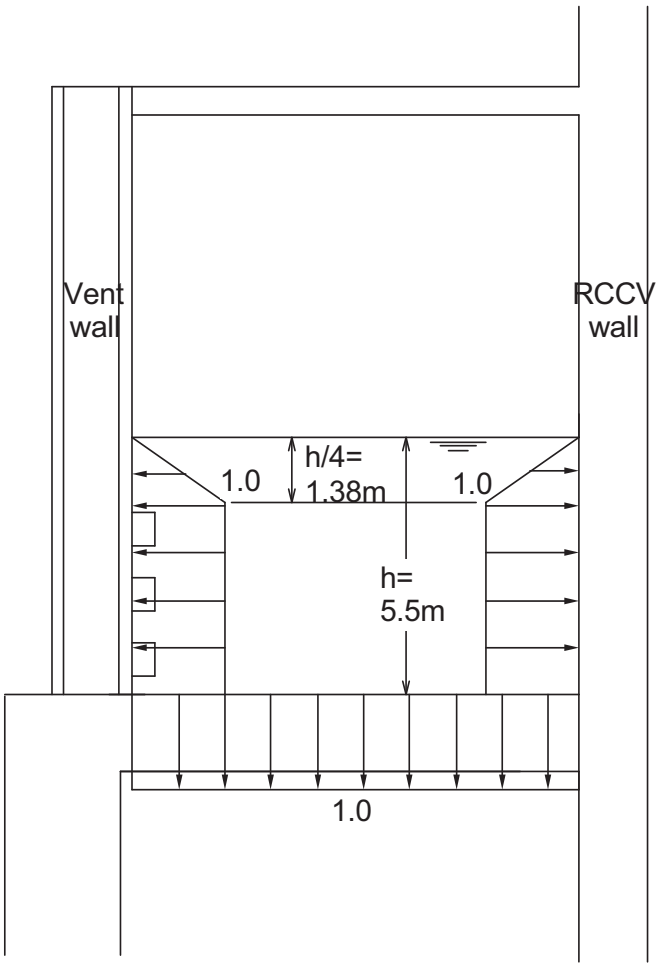


*SRV Peak Positive Pressure = 152 kPaG*
*SRV Peak Negative Pressure = -63 kPaG*
*Dynamic Load Factor (DLF) = 2.0*

***Figure 3G.1-23. SRV Pressure Loads***

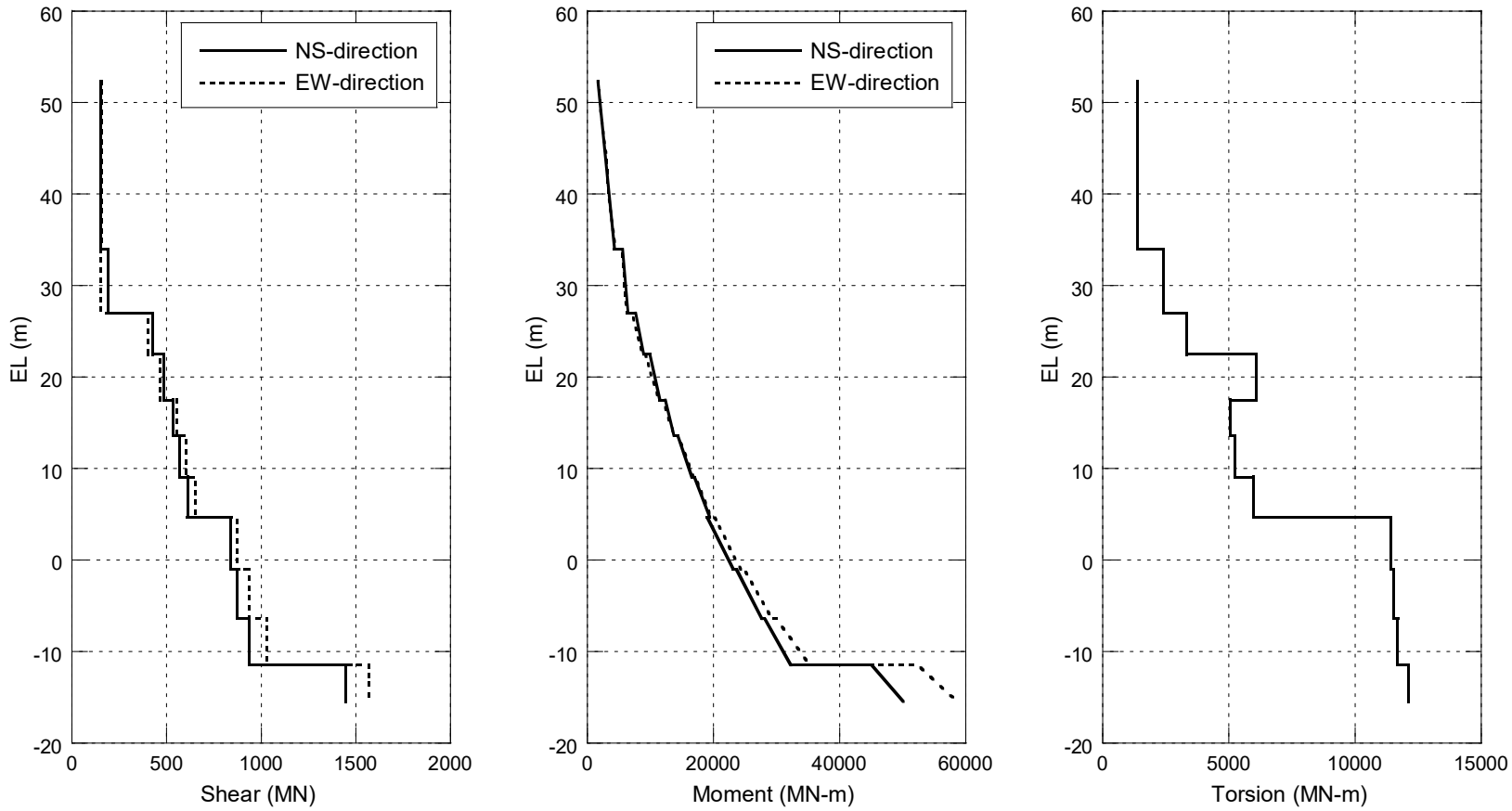


*Figure 3G.1-24. Design Seismic Shears and Moments for RB and FB Walls*

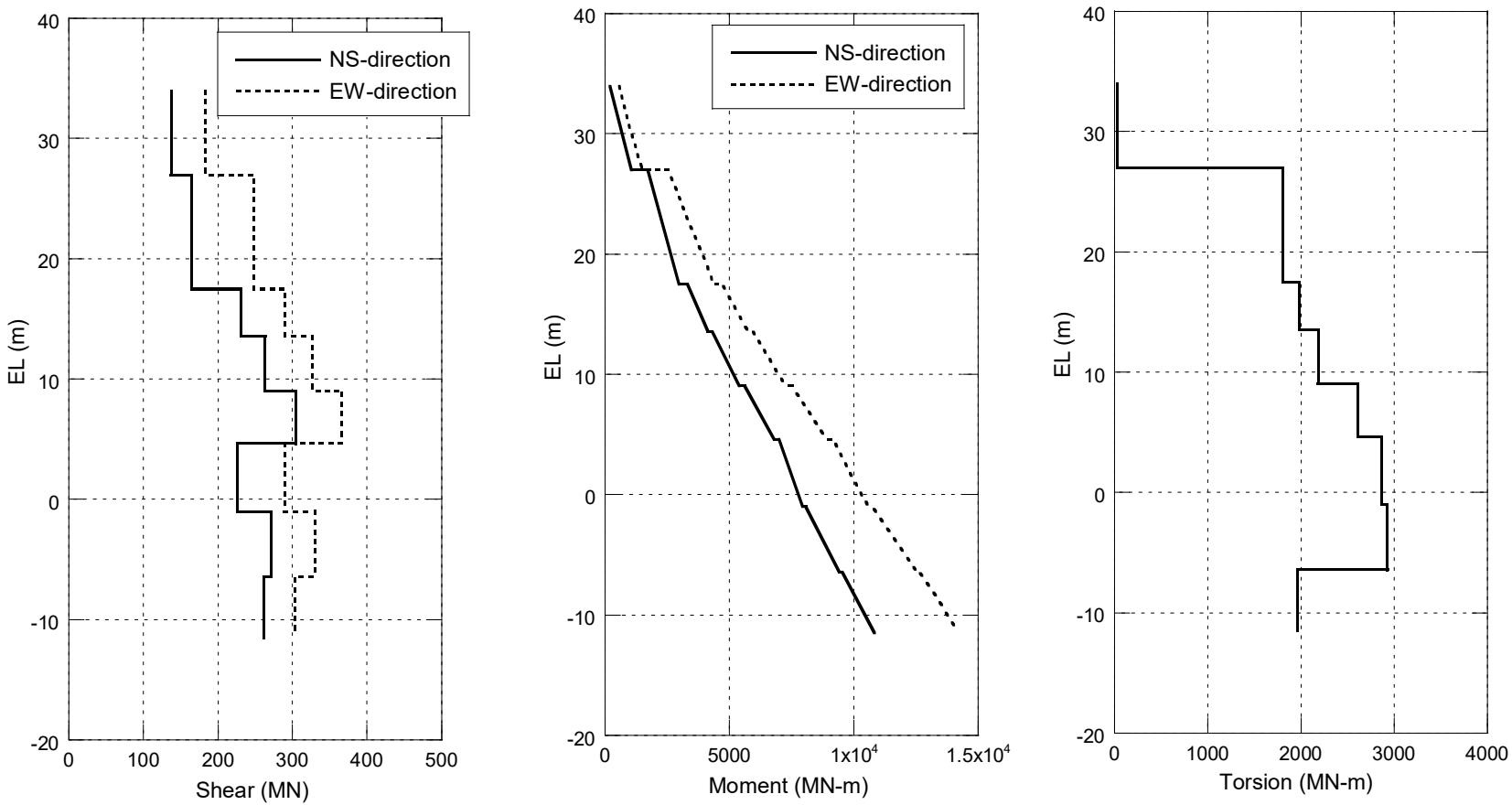


*Figure 3G.1-25. Design Seismic Shears and Moments for RCCV*

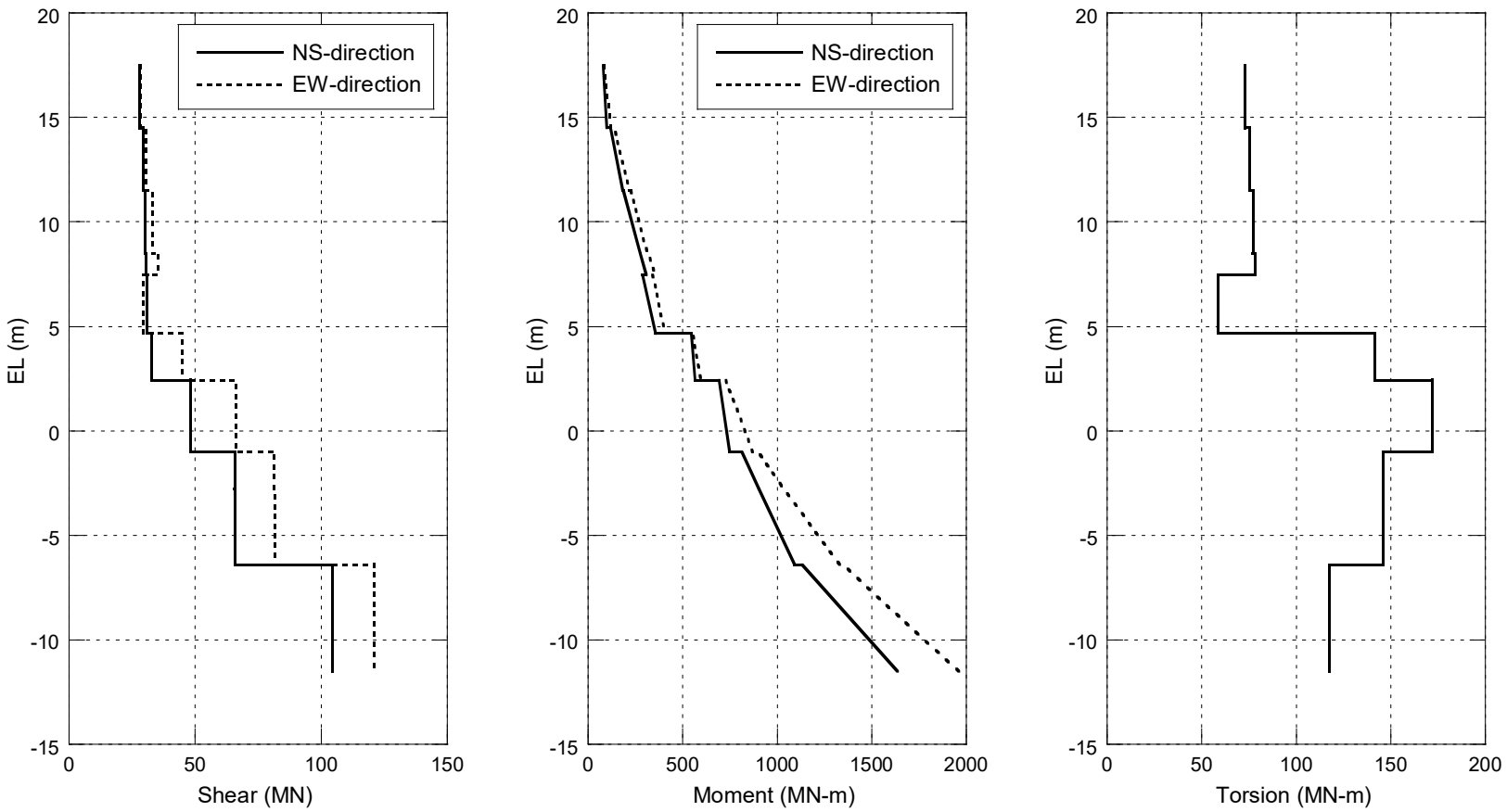


*Figure 3G.1-26. Design Seismic Shears and Moments for RPV Pedestal and Vent Wall*

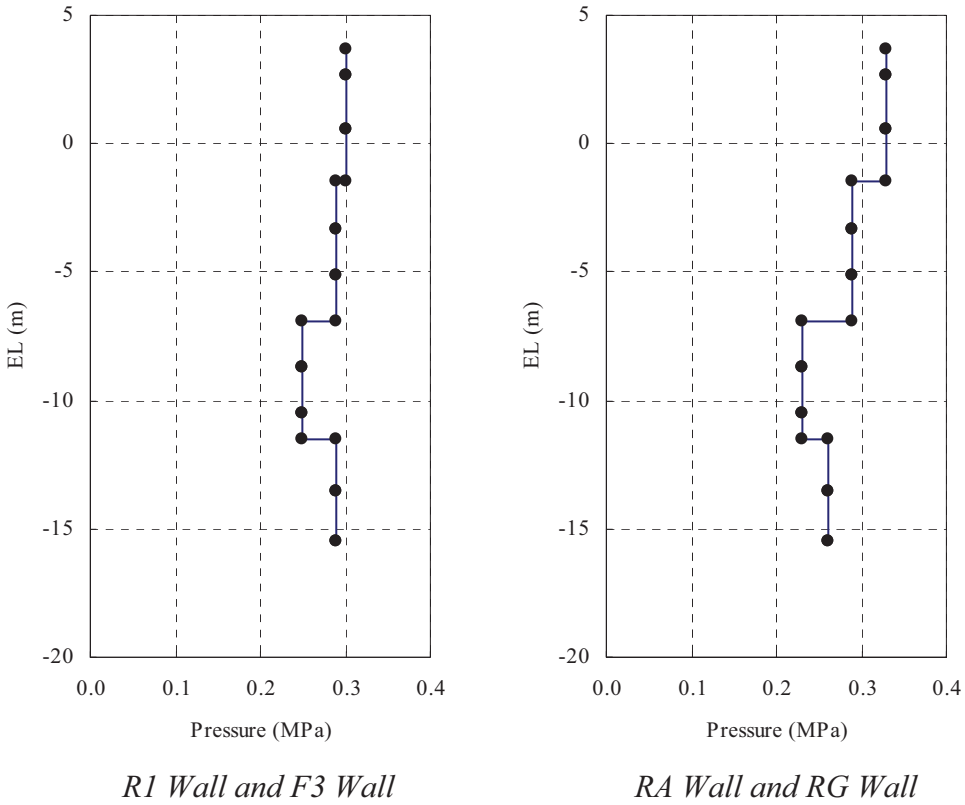


***Figure 3G.1-27. Seismic Lateral Soil Pressure***

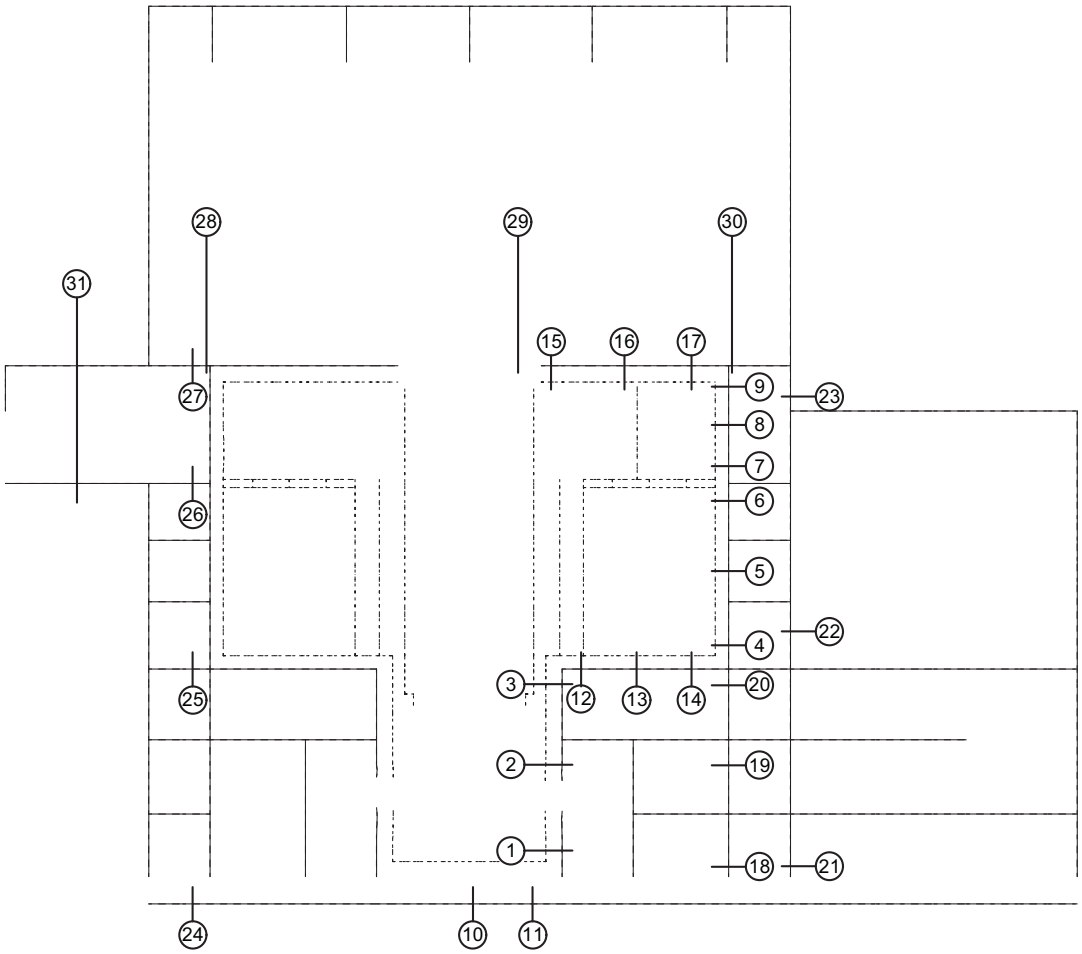


*Figure 3G.1-28. Sections Considered for Analysis*

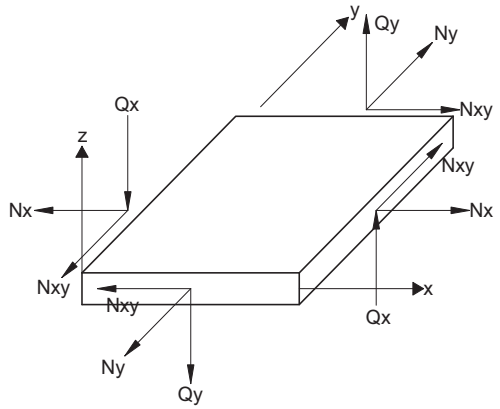


Membrane and Shear Forces

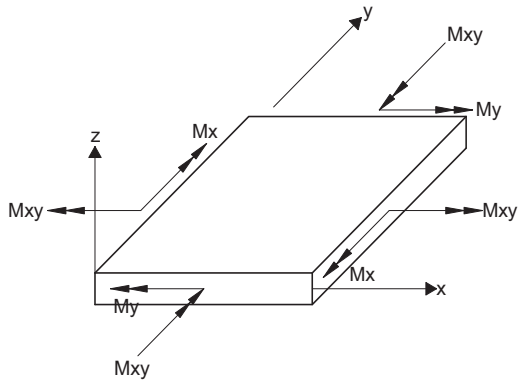


Moments

Definition of Element Coordinate System

| Structure | x | y | z |
|---|---|---|---|
| RCCV Wall<br>RPV Pedestal<br>External Wall | horizontal | vertical | outward |
| Wall in N-S Direction | horizontal | vertical | toward West |
| Wall in E-W Direction | horizontal | vertical | toward South |
| Foundation Mat<br>Floor Slab<br>Top Slab | toward South | toward West | downward |
| Suppression Pool Slab | radial | circumferential | downward |

***Figure 3G.1-29. Force and Moment in Shell Element***

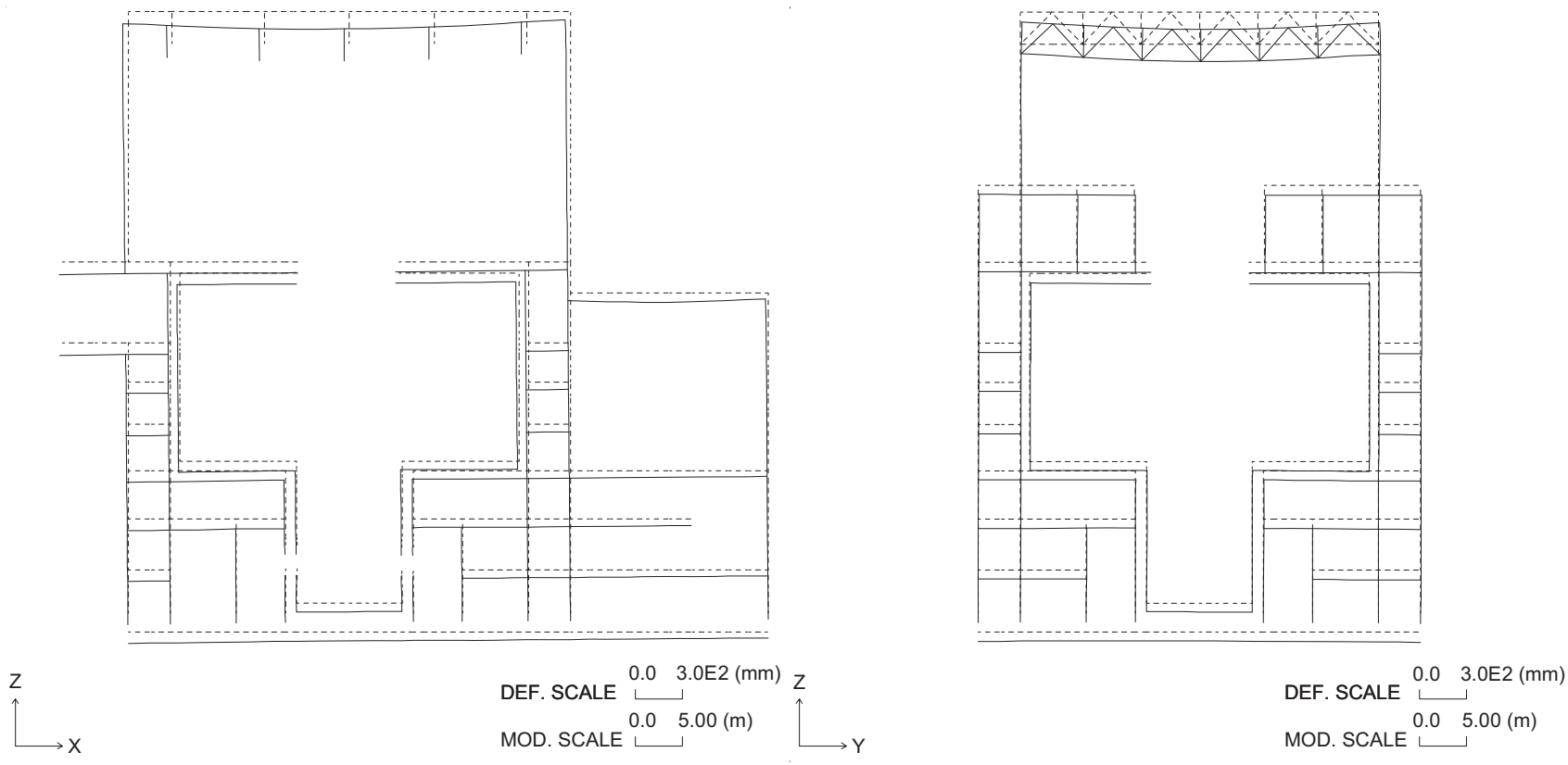


*Legend: DEF. = Deformation*
*MOD. = Model*

***Figure 3G.1-30. Section Deformation for Dead Load***

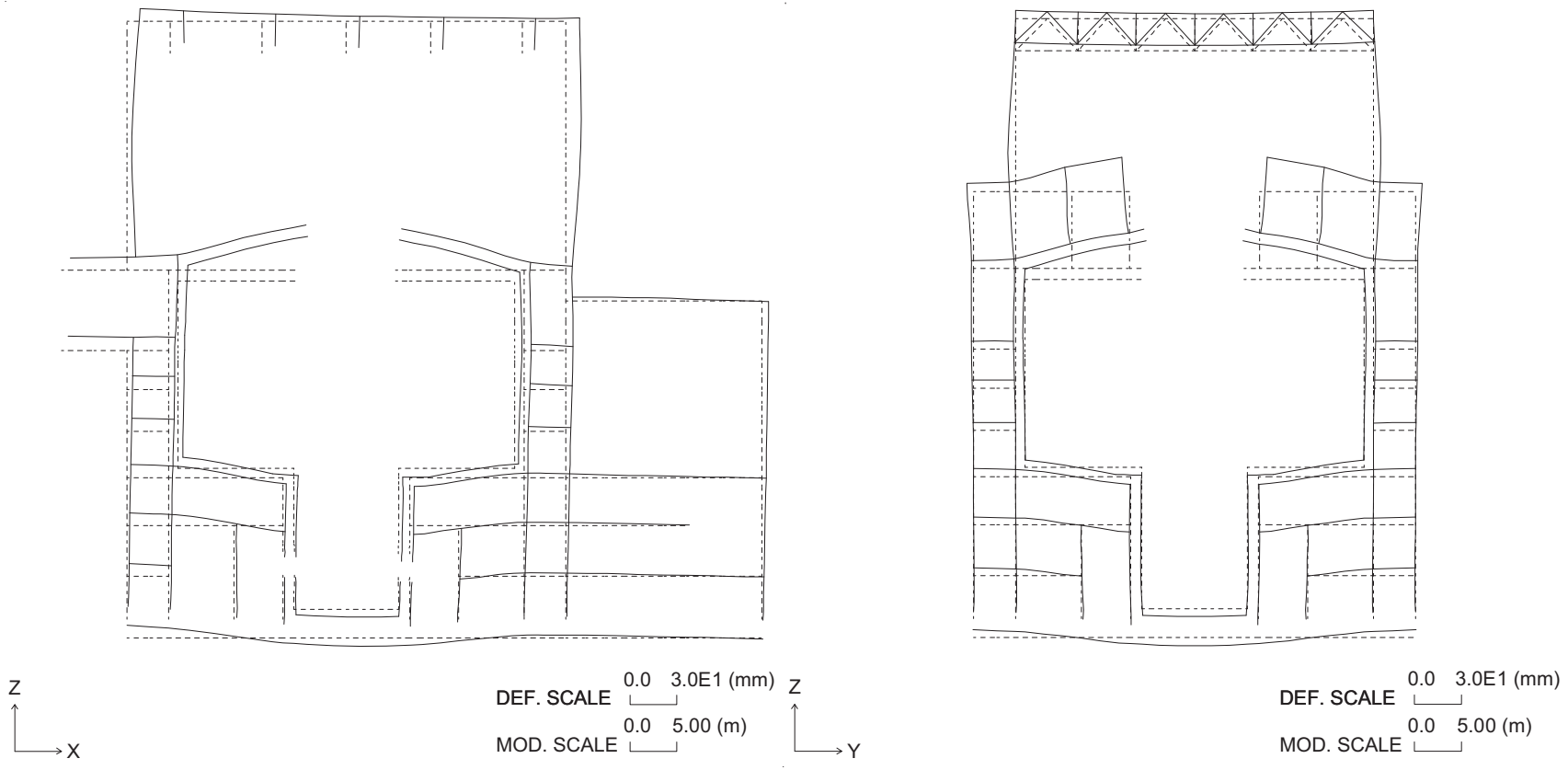


*Legend: DEF. = Deformation*
*MOD. = Model*

***Figure 3G.1-31. Section Deformation for Drywell Unit Pressure (1 MPa)***

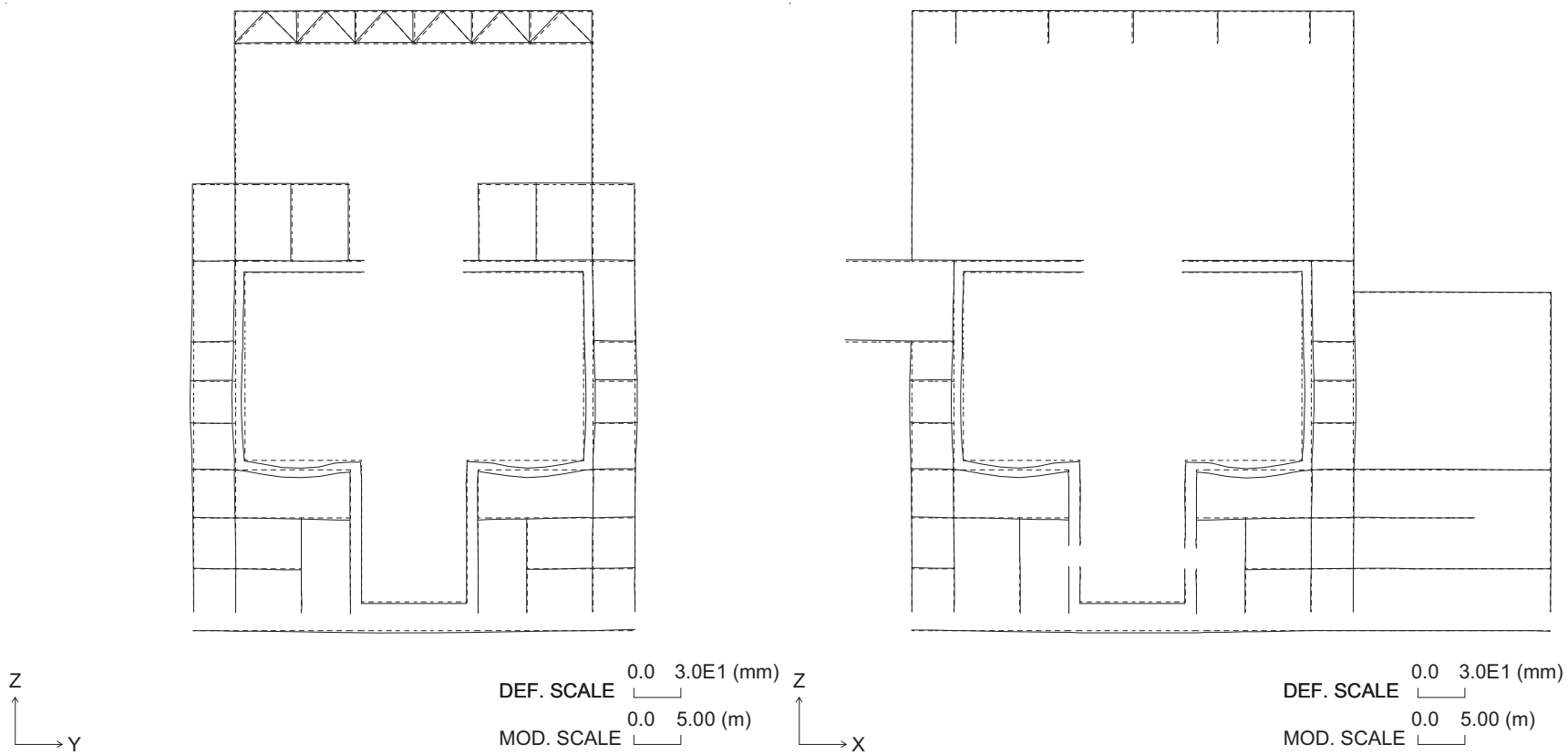


*Legend: DEF. = Deformation*
*MOD. = Model*

***Figure 3G.1-32. Section Deformation for Wetwell Unit Pressure (1 MPa)***

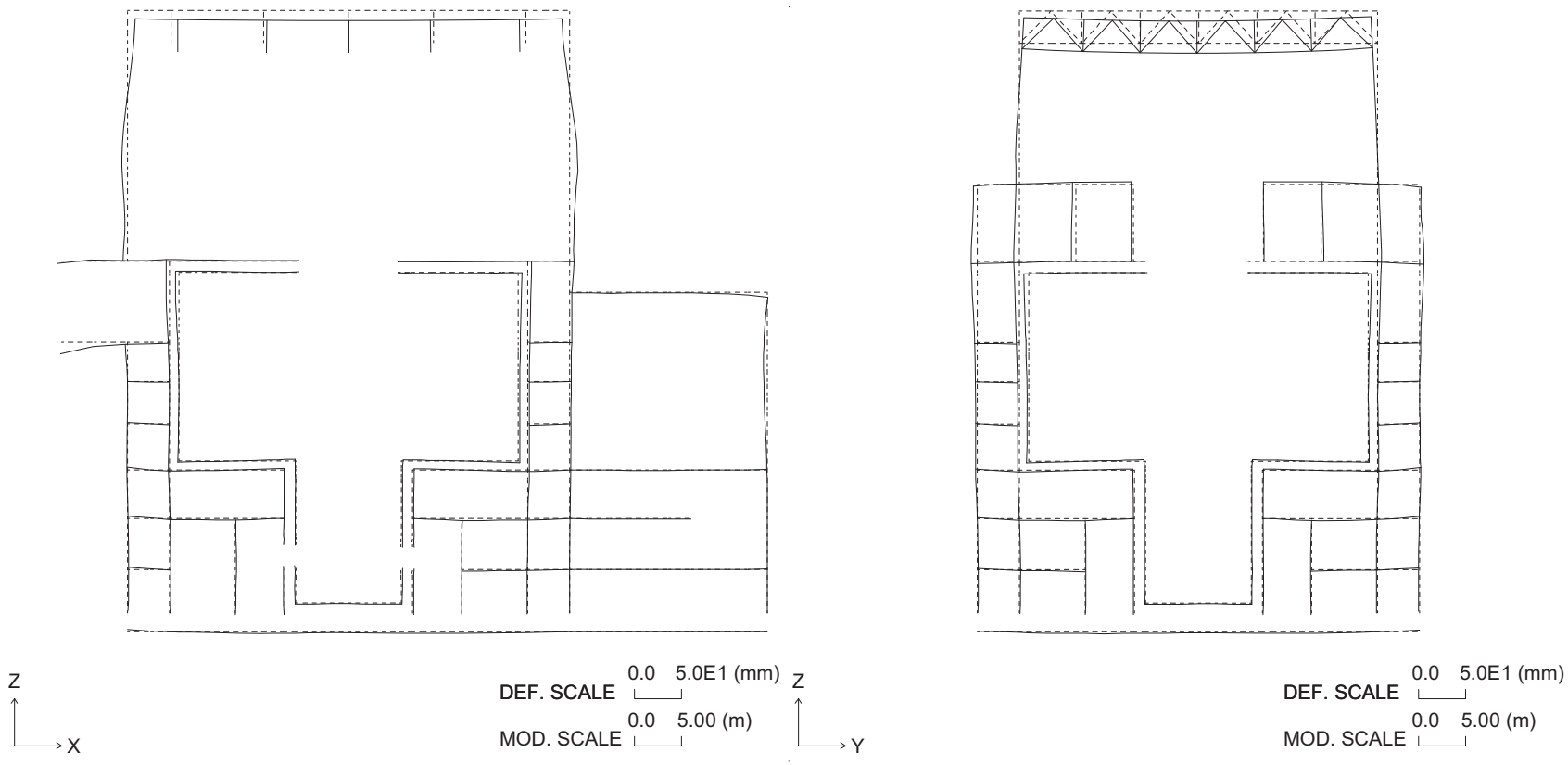


*Legend: DEF. = Deformation*
*MOD. = Model*

***Figure 3G.1-33. Section Deformation for Thermal Load (Normal Operation: Winter)***

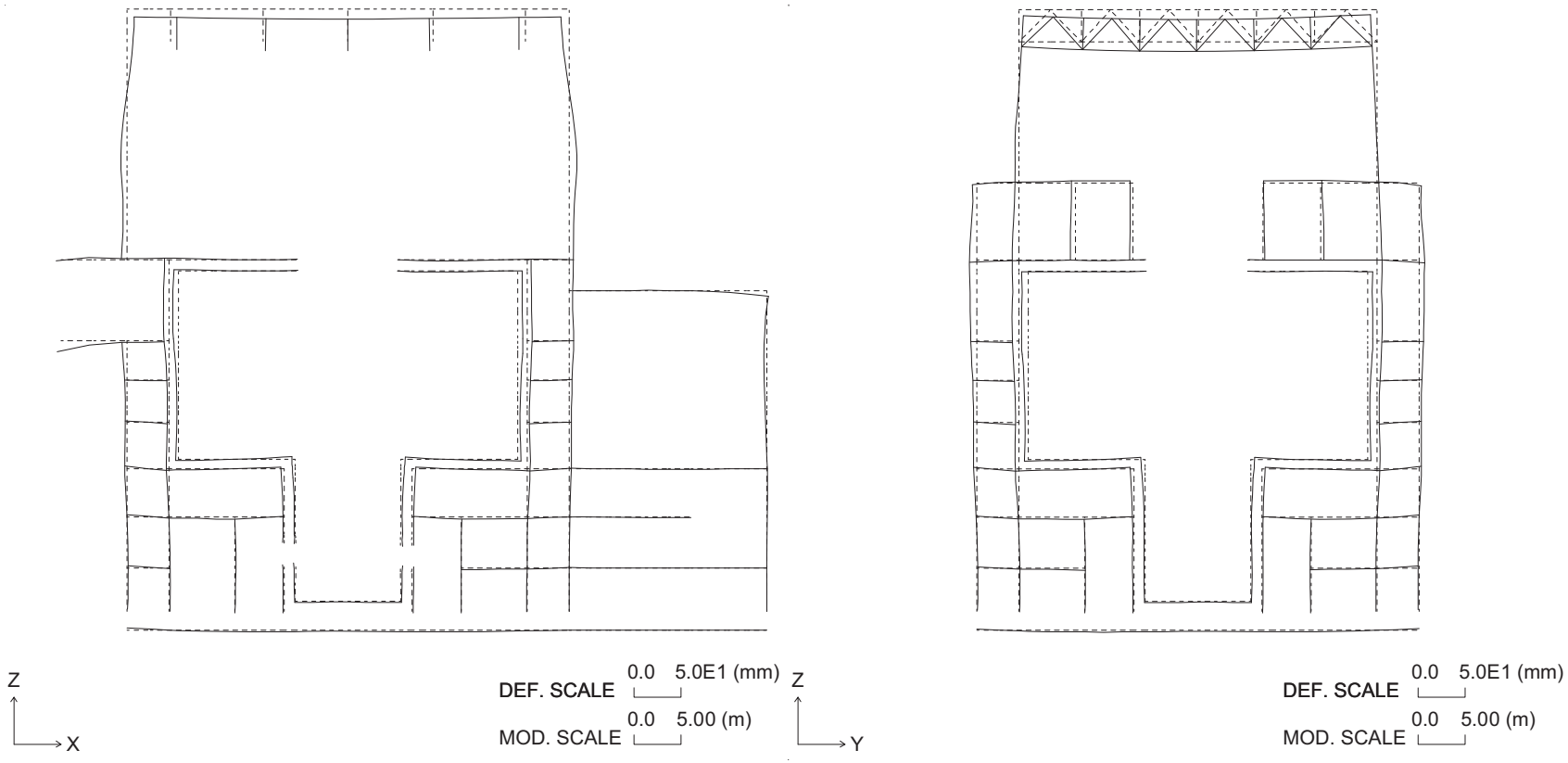


*Legend: DEF. = Deformation*
*MOD. = Model*

***Figure 3G.1-34. Section Deformation for Thermal Load (LOCA After 6 min.: Winter)***

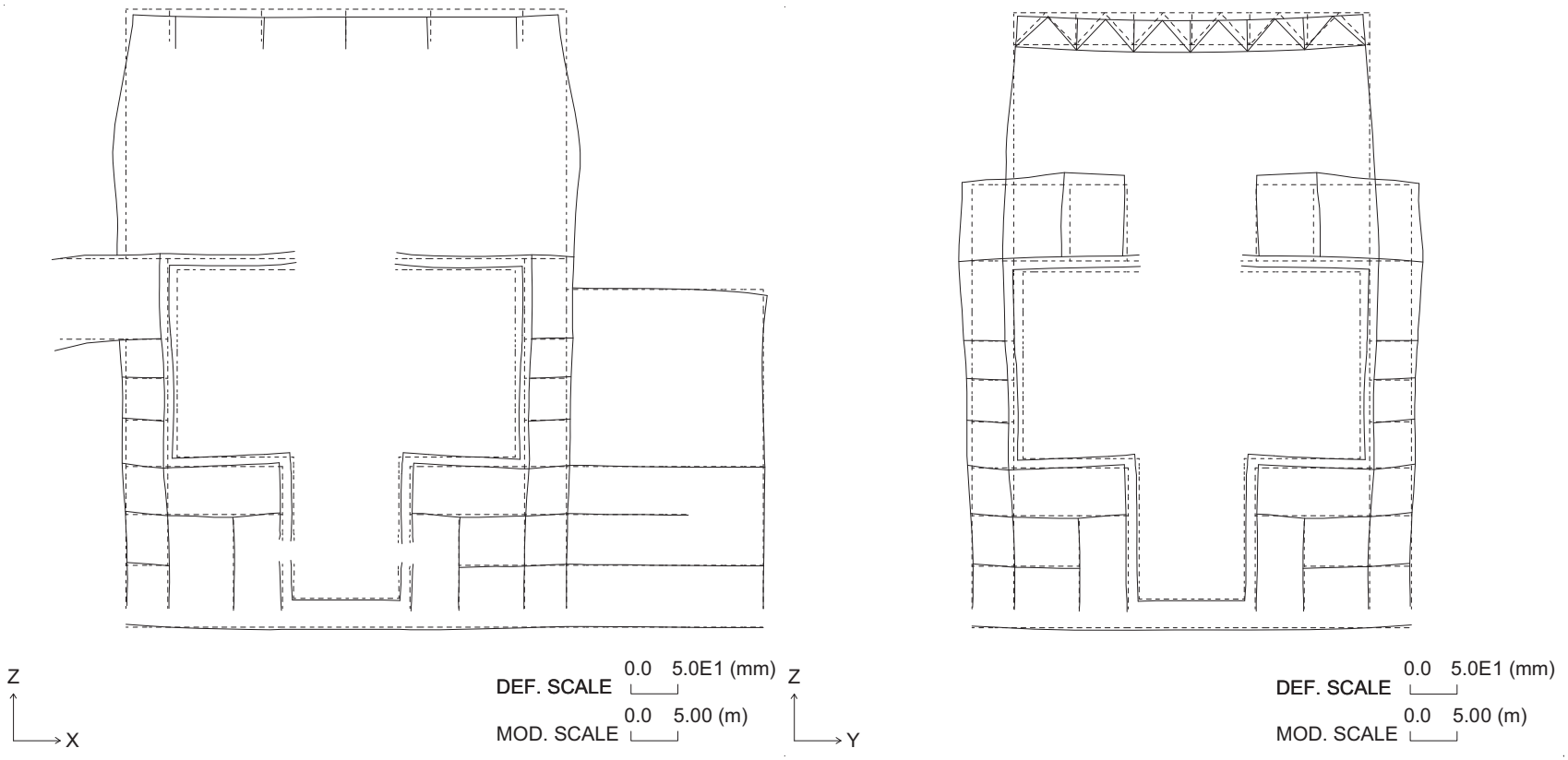


*Legend: DEF. = Deformation*
*MOD. = Model*

***Figure 3G.1-35. Section Deformation for Thermal Load (LOCA After 72 hr.: Winter)***

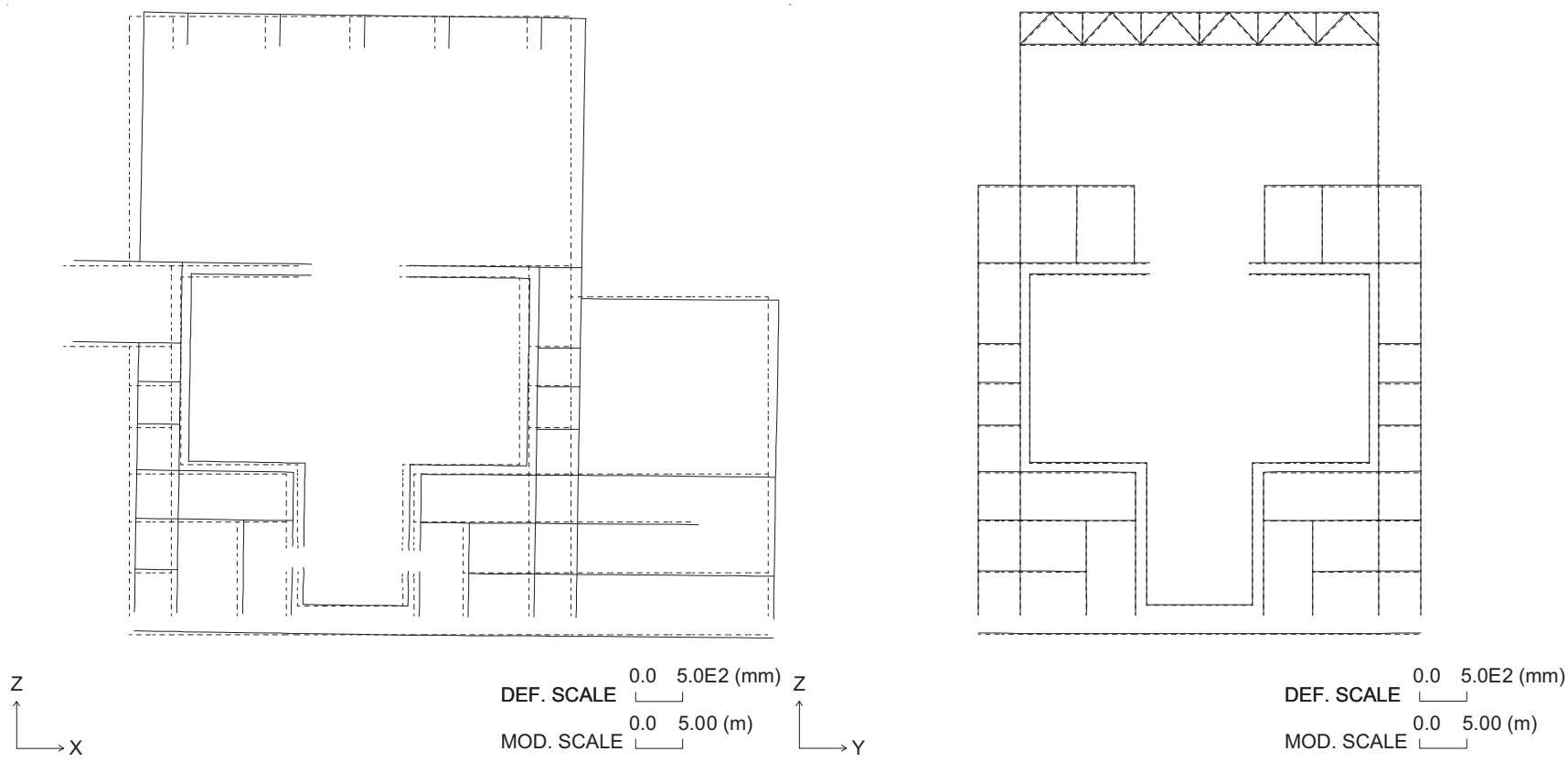


*Legend: DEF. = Deformation*
*MOD. = Model*

***Figure 3G.1-36. Section Deformation for Seismic Load (Horizontal: North to South)***

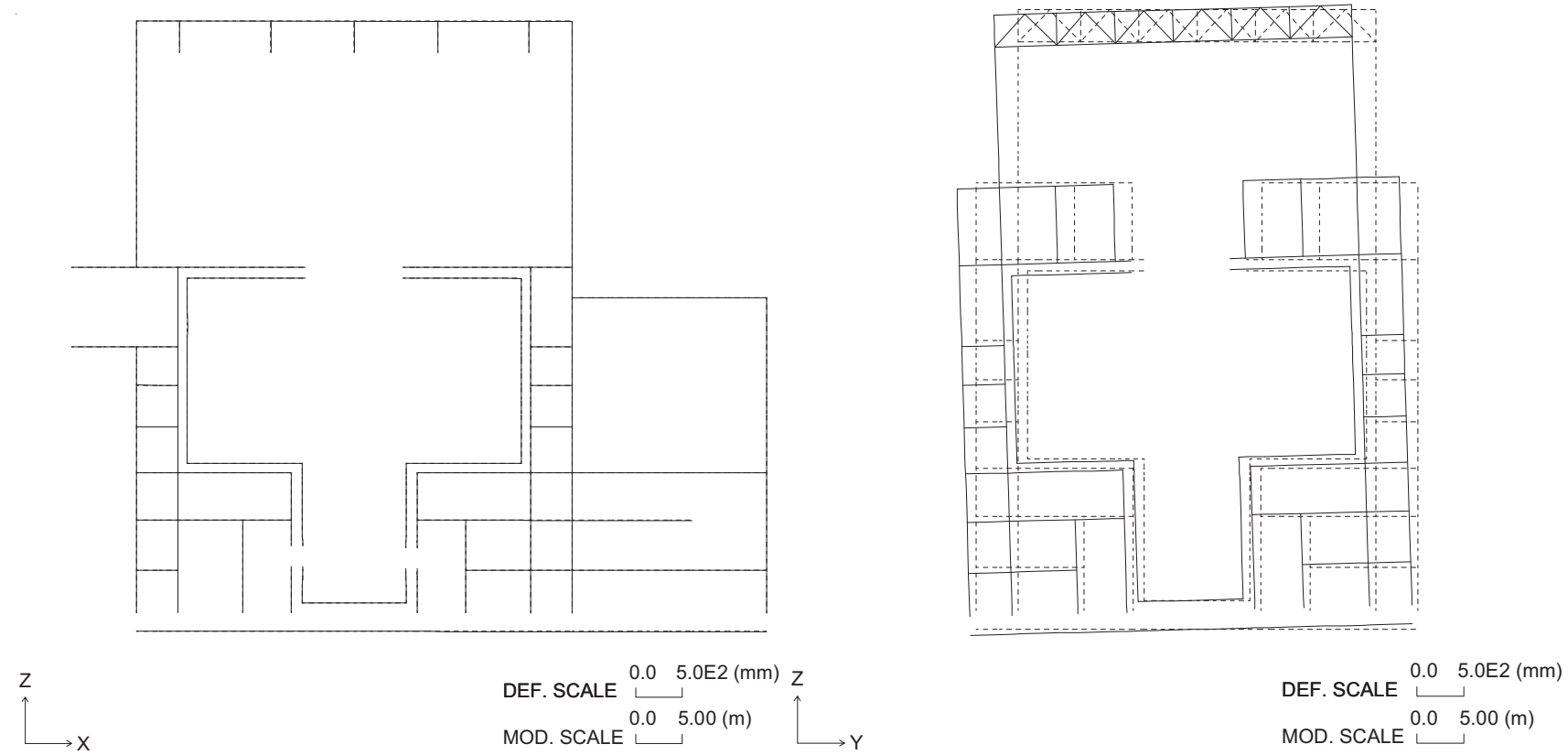


*Legend: DEF. = Deformation*
*MOD. = Model*

***Figure 3G.1-37. Section Deformation for Seismic Load (Horizontal: East to West)***

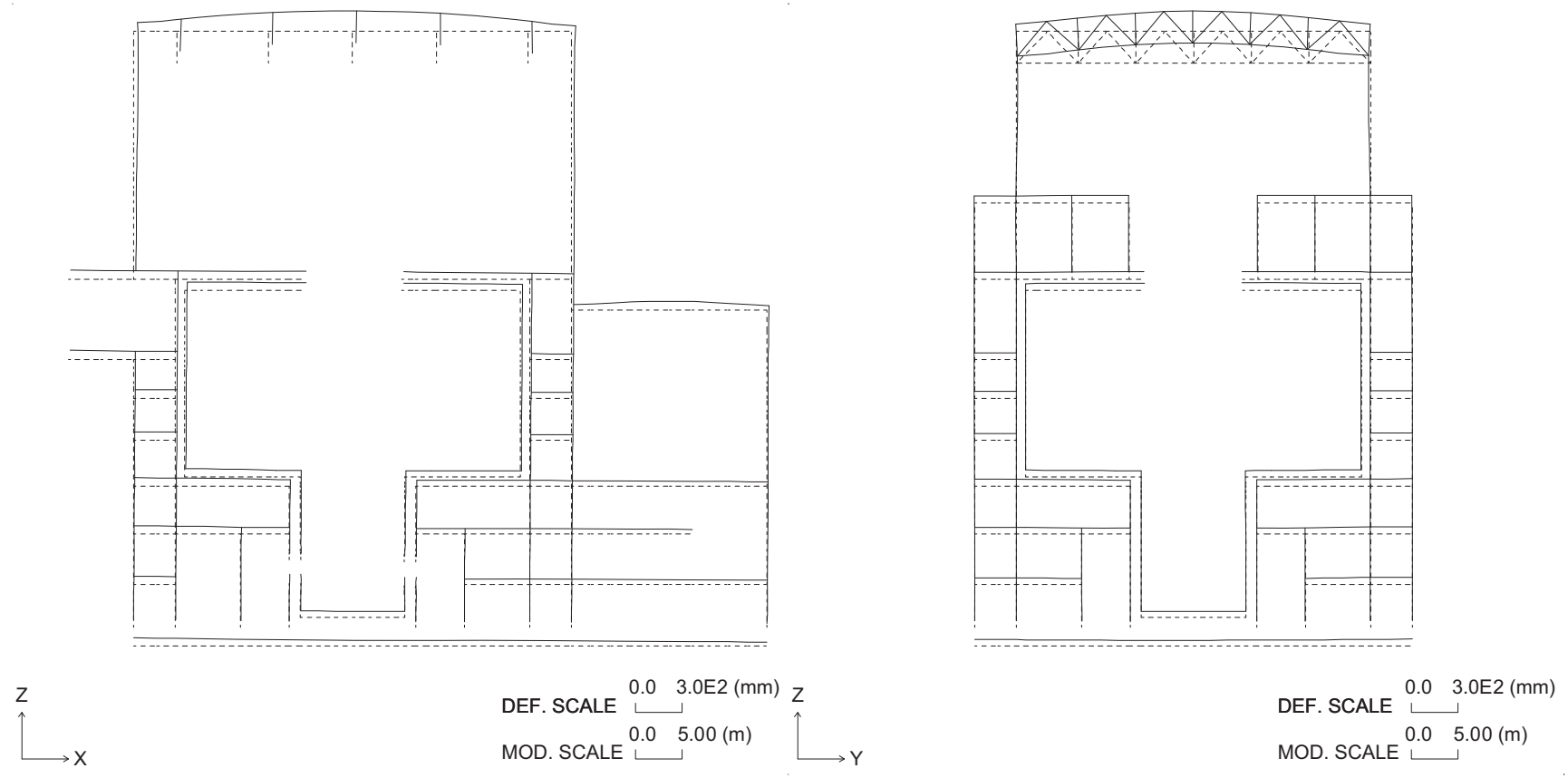


*Legend: DEF. = Deformation*
*MOD. = Model*

***Figure 3G.1-38. Section Deformation for Seismic Load (Vertical: Upward)***

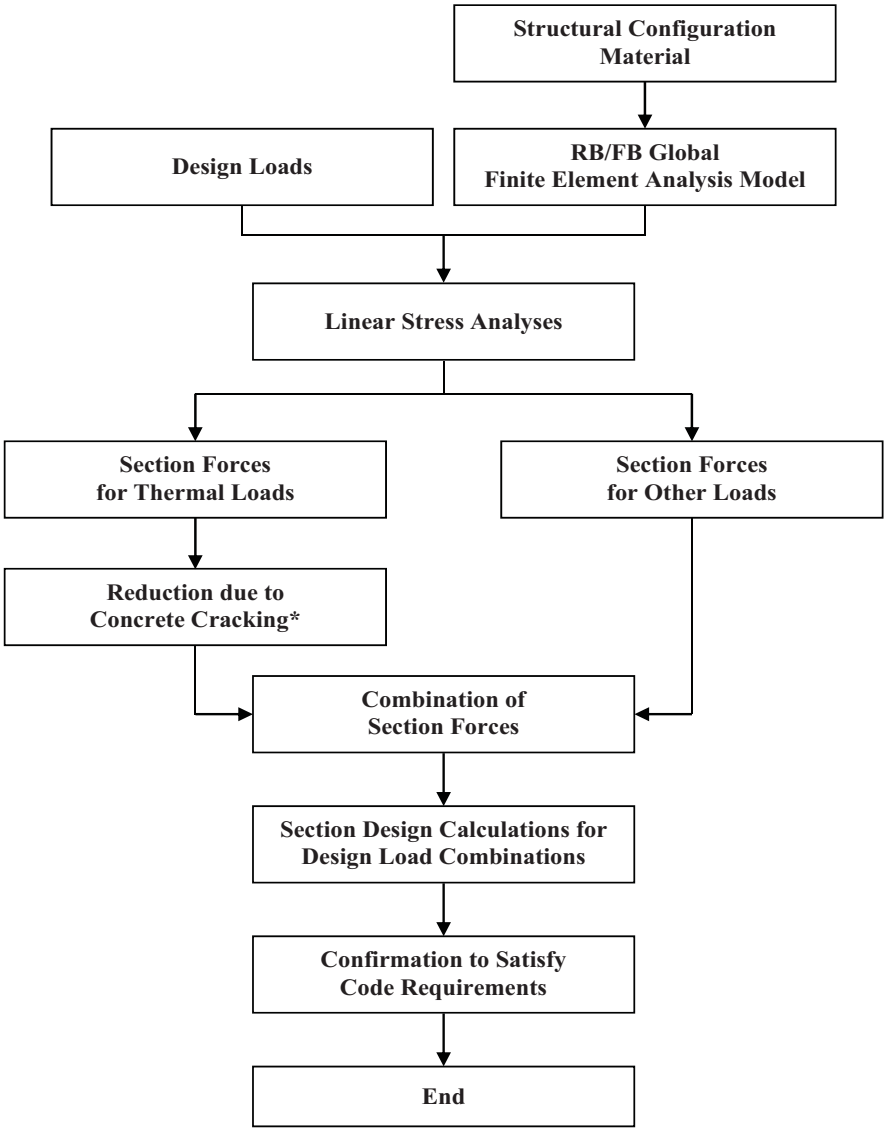


*: *Thermal section forces are reduced using the section design calculation program, SSDP-2D, with thermal cracking option selected.*
*However, for the LOCA thermal loads, "thermal ratios" obtained by 3D nonlinear analyses are multiplied to the section forces obtained by linear stress analyses.*
*The section forces from the non-linear analyses can also be used directly.*
*Thermal cracking option of SSDP-2D is not used together with 3D nonlinear analyses.*
*(Refer to Subsections 3.8.1.4.1.2 and 3.8.1.4.1.3.)*

***Figure 3G.1-39. Flow Chart for Structural Analysis and Design***

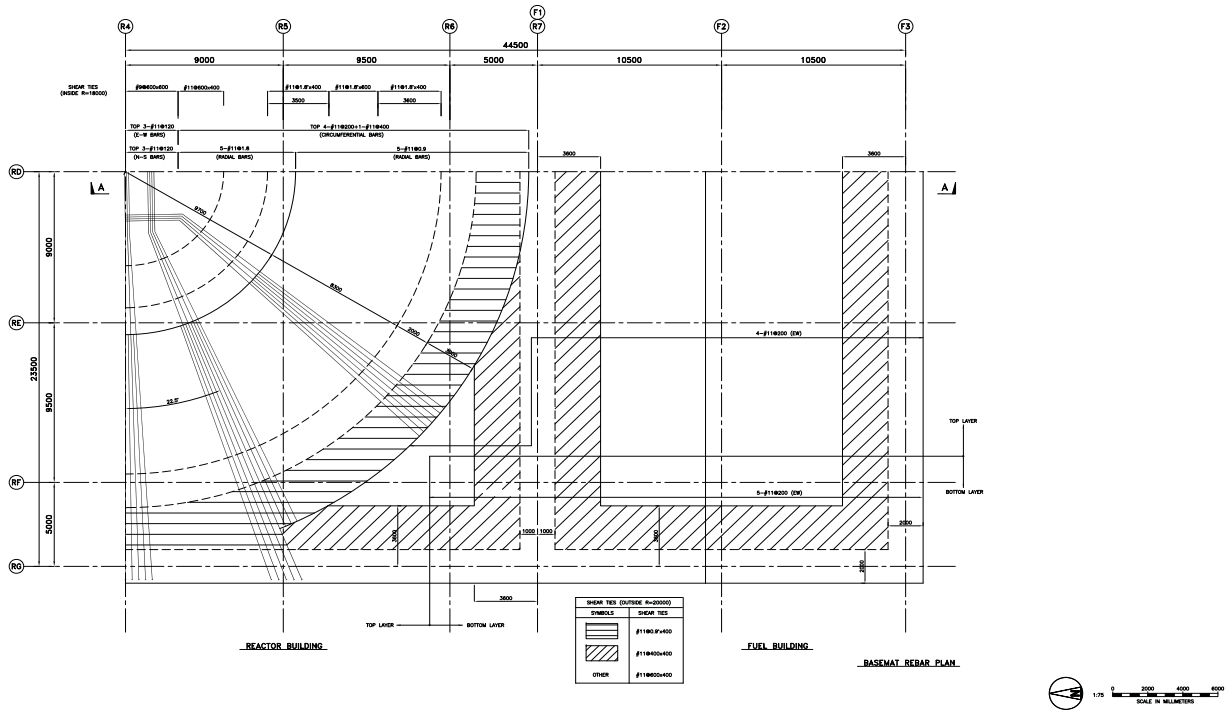


***Figure 3G.1-40. Reinforcing Steel of Foundation Mat: Plan***

*Note: All dimensions are in mm unless otherwise noted*

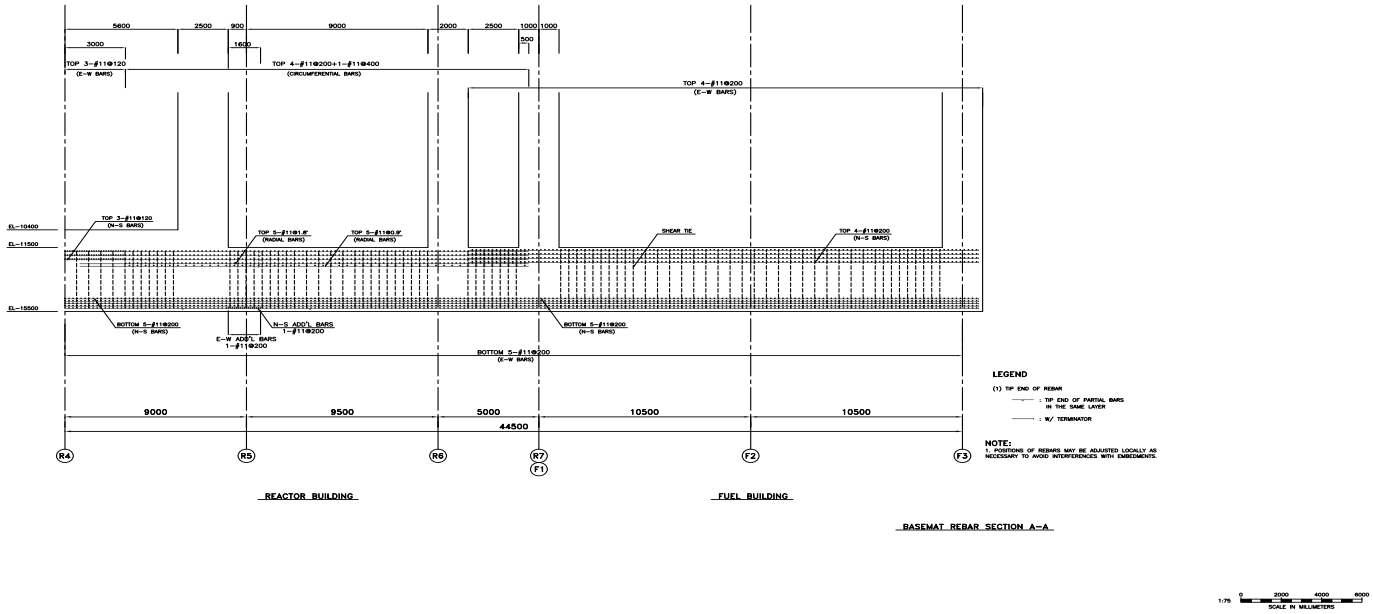


***Figure 3G.1-41. Reinforcing Steel of Foundation Mat: Section A-A***

*Note: All dimensions are in mm unless otherwise noted*

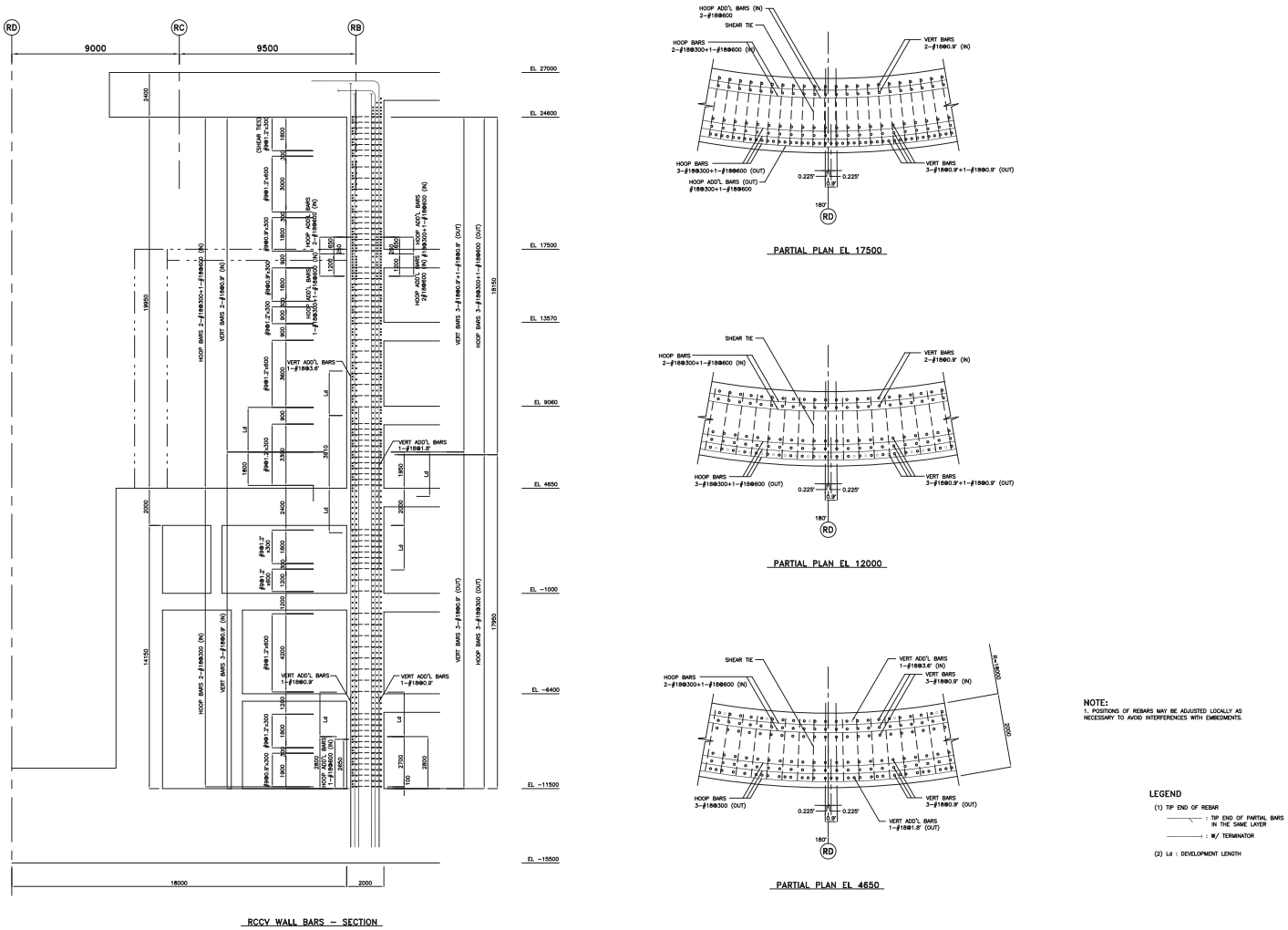


***Figure 3G.1-42. Reinforcing Steel of RCCV Wall***

*Global Note for Figure: Evaluation results of Subsection 3G.5.3 included.*

*Note: All dimensions are in mm unless otherwise noted*

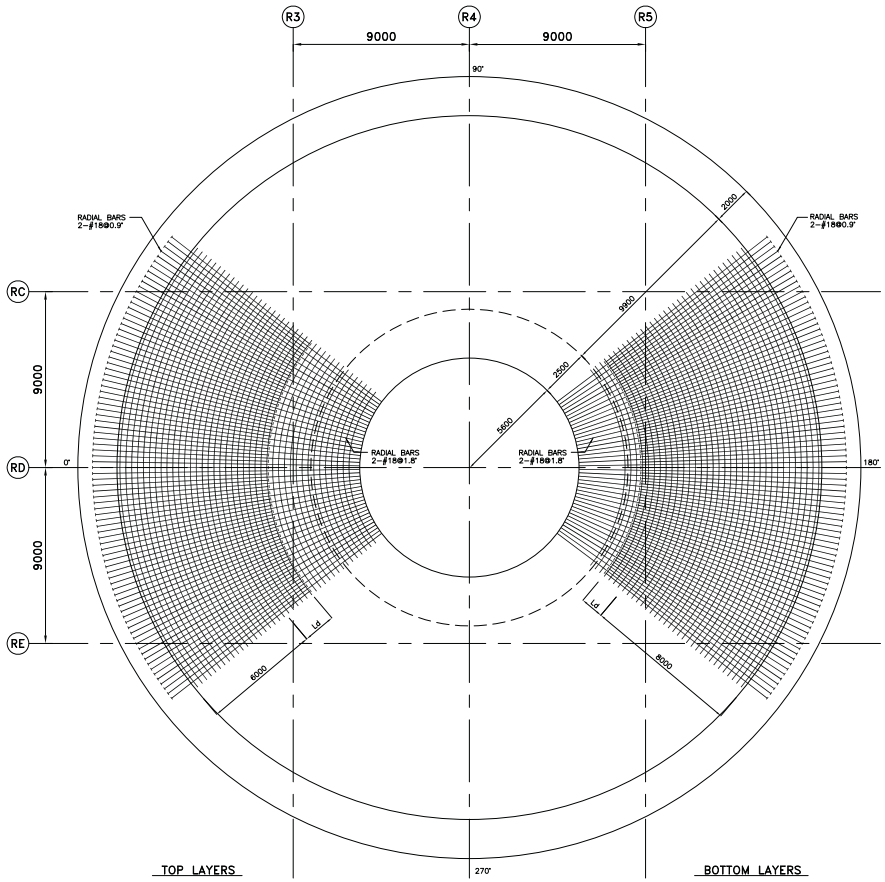


SUPPRESSION POOL SLAB – PLAN

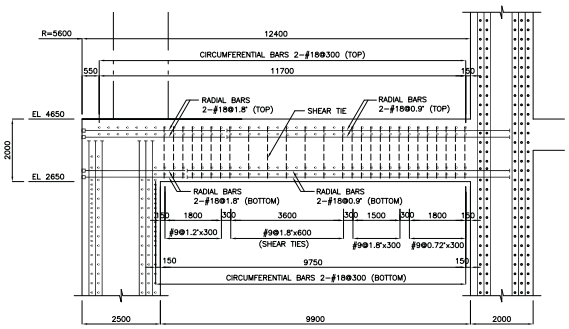


SUPPRESSION POOL SLAB – SECTION

LEGEND

(1) TIP END OF REBAR

: W/ TERMINATOR

(2) Ld : DEVELOPMENT LENGTH

NOTE:
1. POSITIONS OF REBARS MAY BE ADJUSTED LOCALLY AS NECESSARY TO AVOID INTERFERENCES WITH EMBEDMENTS.

***Figure 3G.1-43. Reinforcing Steel of Suppression Pool Slab***

*Note: All dimensions are in mm unless otherwise noted*

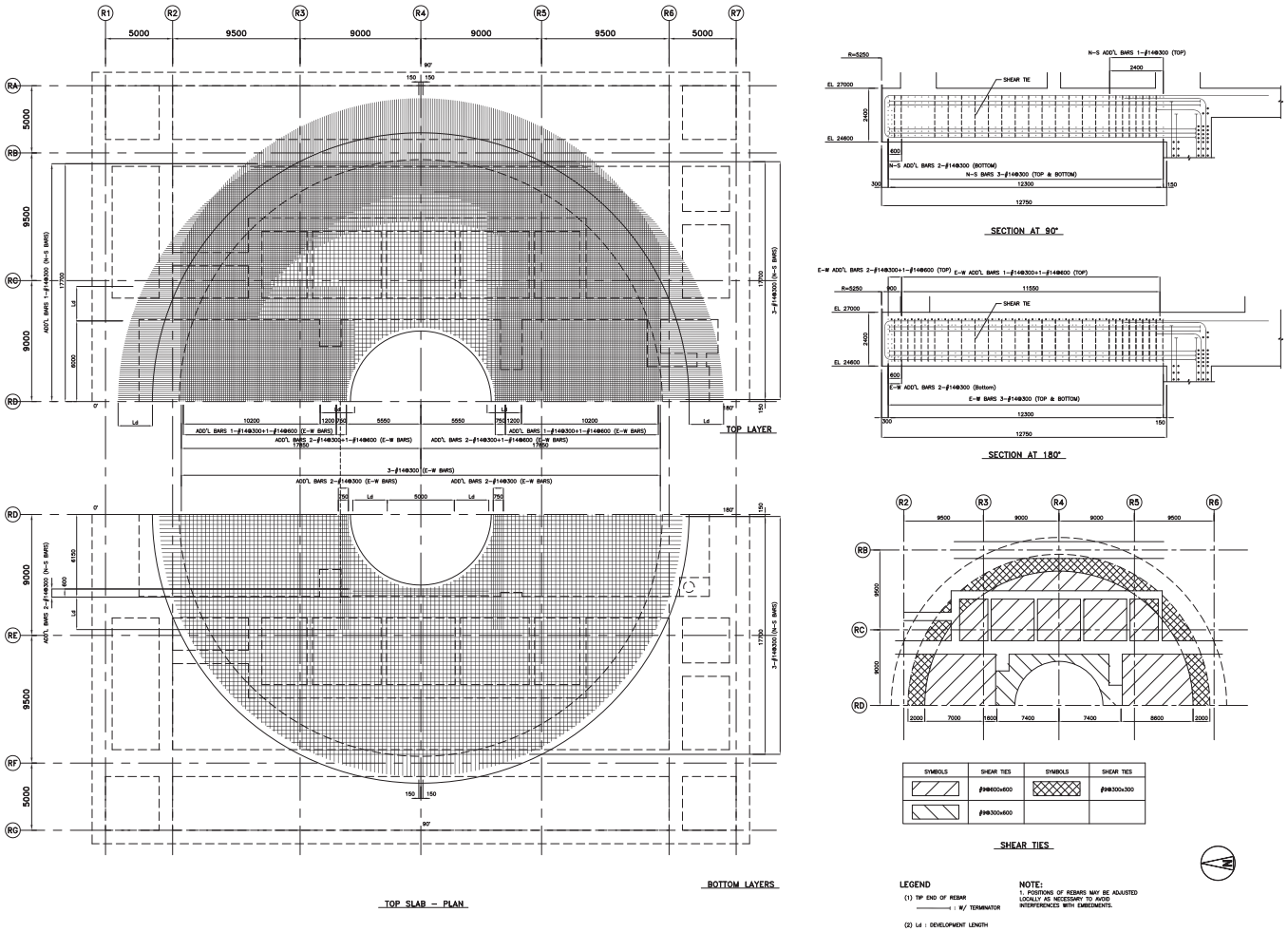


***Figure 3G.1-44. Reinforcing Steel of Top Slab***

*Global Note for Figure: Evaluation results of Subsection 3G.5.3 included.*

*Note: All dimensions are in mm unless otherwise noted*

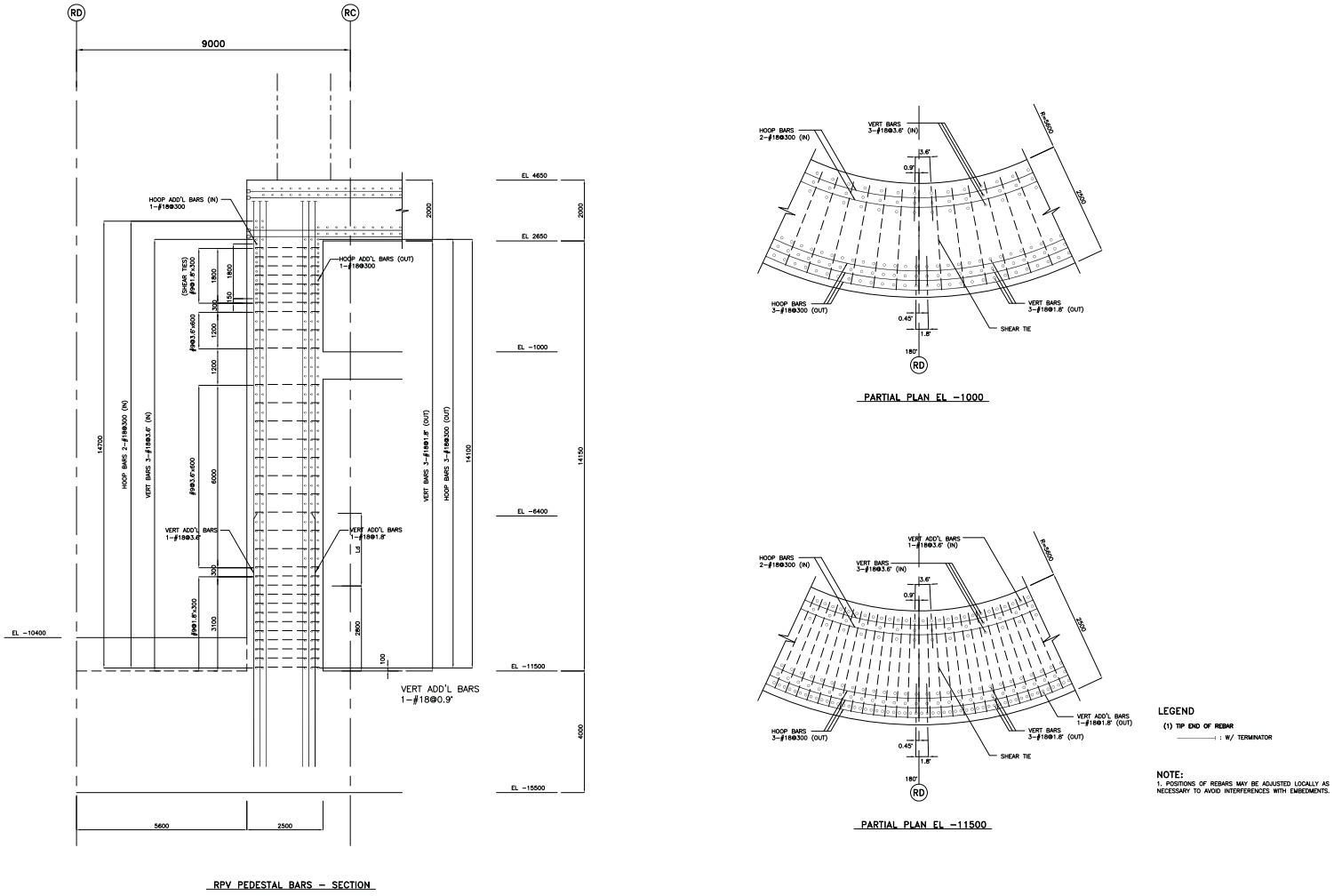


***Figure 3G.1-45. Reinforcing Steel of RPV Pedestal***

*Note: All dimensions are in mm unless otherwise noted*

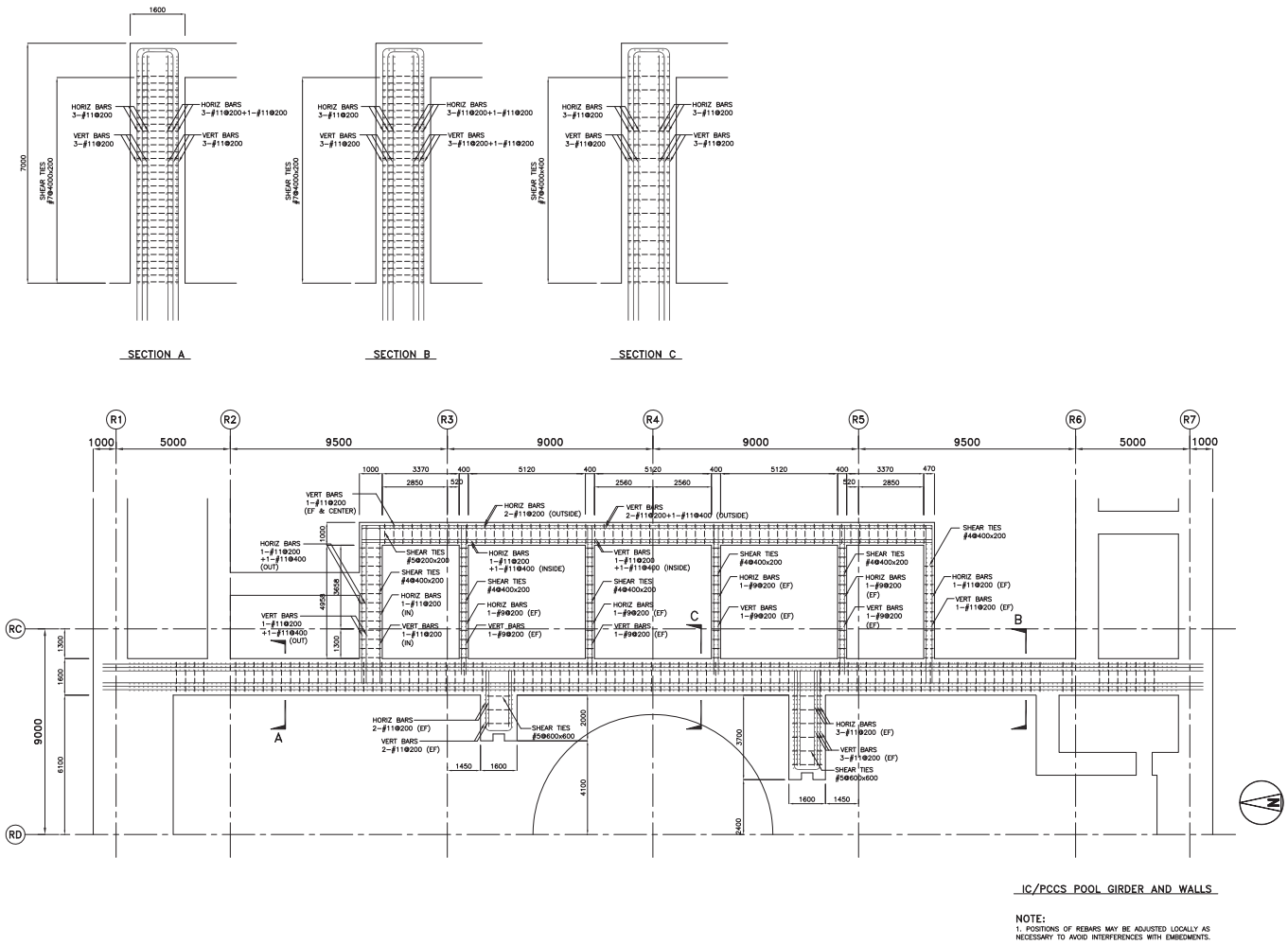


***Figure 3G.1-46. Reinforcing Steel of IC/PCCS Pool Girder***

*Global Note for Figure: Evaluation results of Subsection 3G.5.3 included.*

*Note: All dimensions are in mm unless otherwise noted*

***Figure 3G.1-47. List of RB Wall and Slab Reinforcement***

*Global Note for Figure: Evaluation results of Subsection 3G.5.3 included.*

*Note: All dimentions are in mm unless otherwise noted*

*{{{Security-Related Information - Withhold Under 10 CFR 2.390}}}*

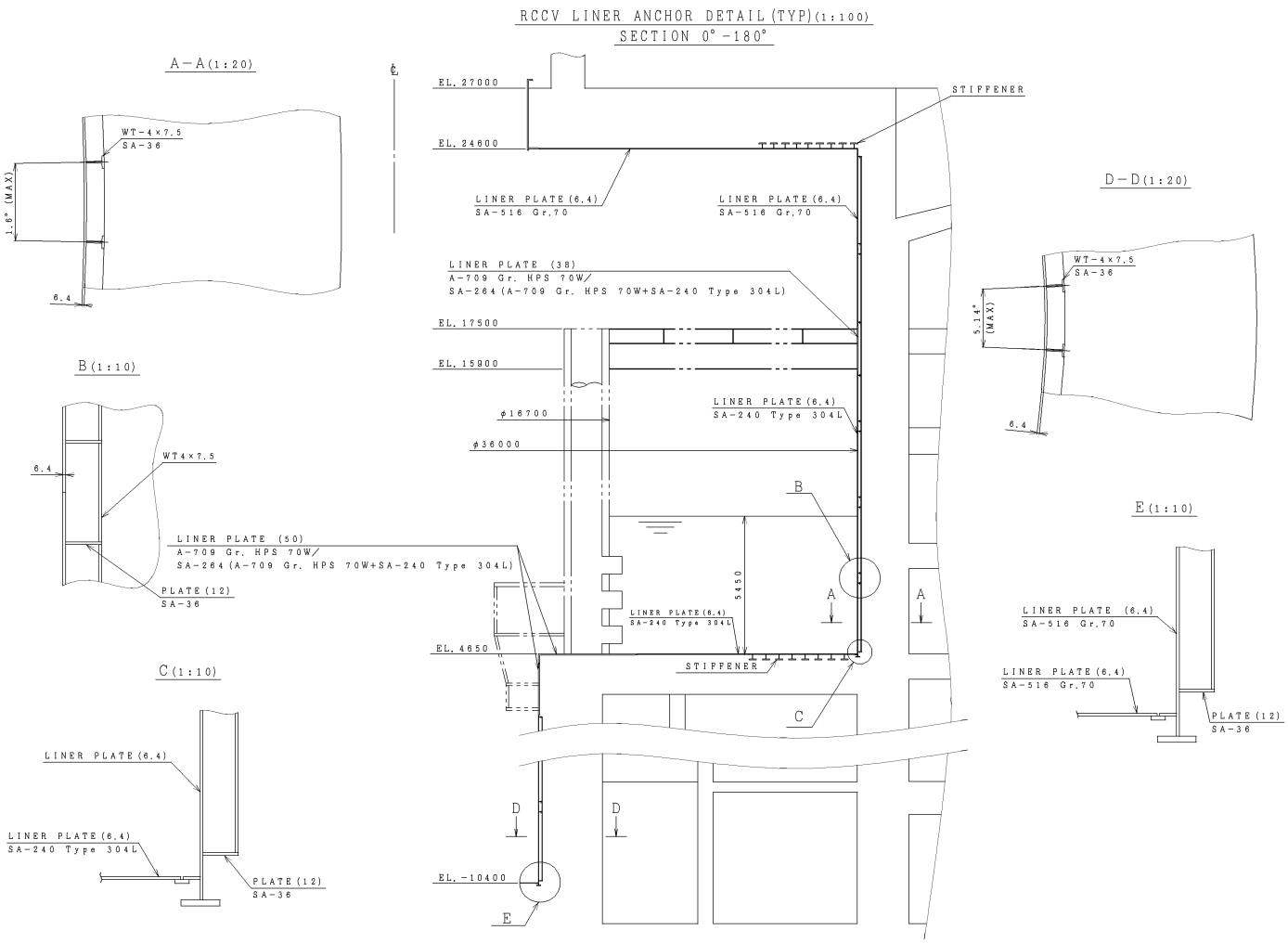


***Figure 3G.1-48. Liner Anchor***

*Note: All dimensions are in mm unless otherwise noted*

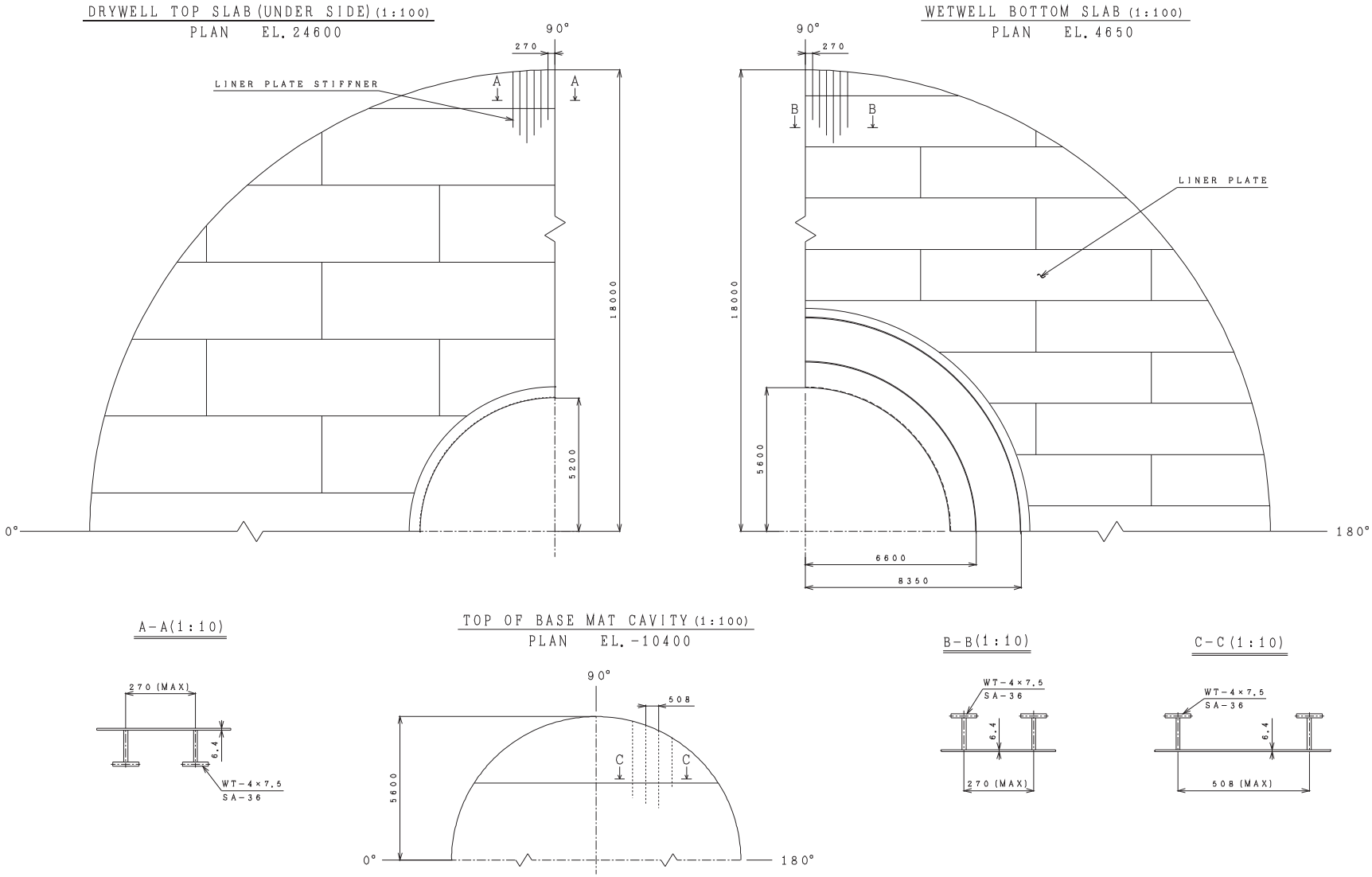


***Figure 3G.1-49. Liner Plate Plans***

*Note: All dimensions are in mm unless otherwise noted*

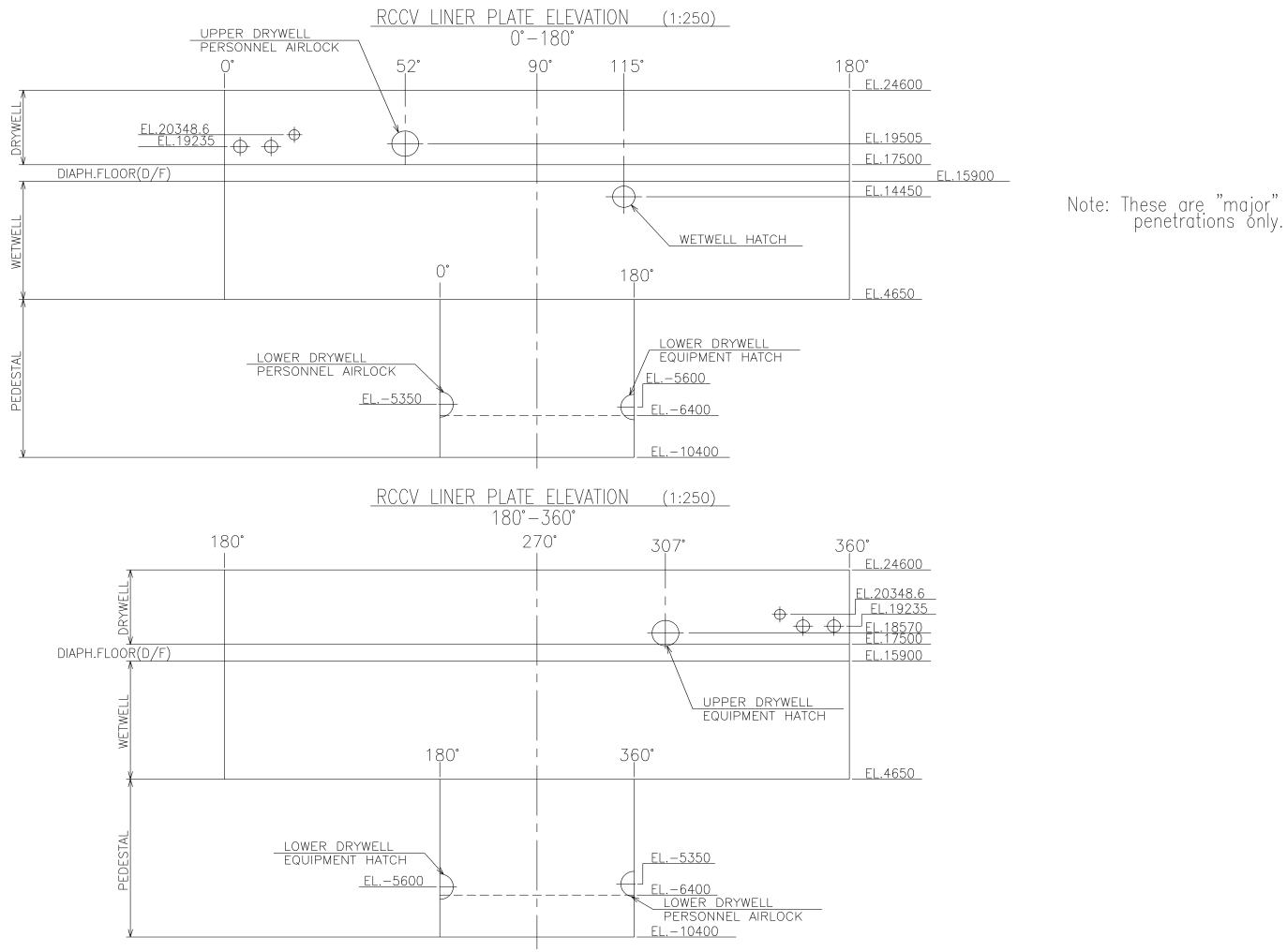


***Figure 3G.1-50. Liner Plate Development Elevation***

*Note: All dimensions are in mm unless otherwise noted*

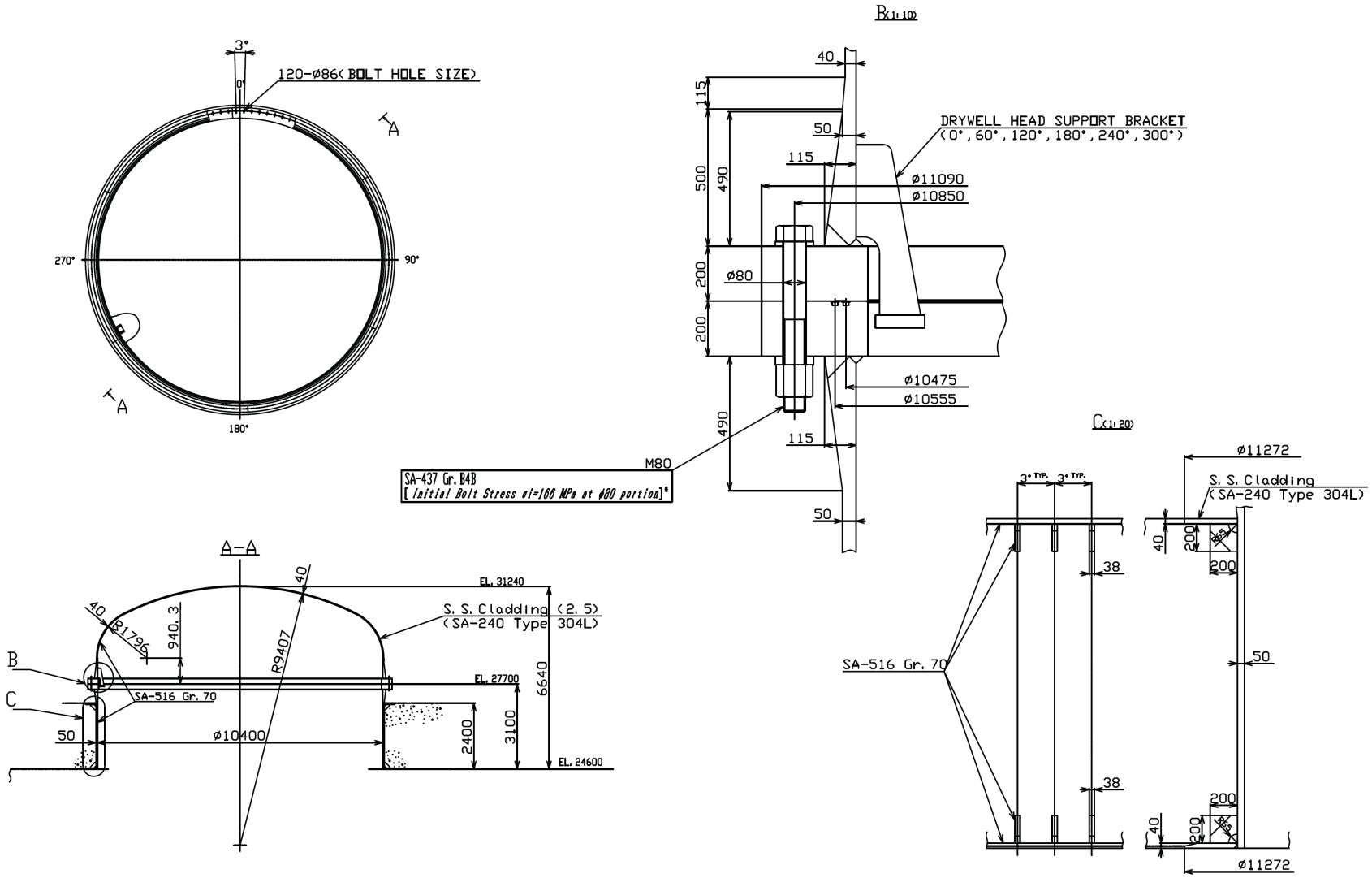


***Figure 3G.1-51. Drywell Head***

*Note: All dimensions are in mm unless otherwise noted*

***Figure 3G.1-52. Equipment Hatch***

*Note: All dimensions are in mm unless otherwise noted*

*{{{Security-Related Information - Withhold Under 10 CFR 2.390}}}*

***Figure 3G.1-53. Wetwell Hatch***

*Note: All dimensions are in mm unless otherwise noted*

*{{{Security-Related Information - Withhold Under 10 CFR 2.390}}}*

***Figure 3G.1-54. Personnel Airlock***

*Note: All dimensions are in mm unless otherwise noted*

*{{{Security-Related Information - Withhold Under 10 CFR 2.390}}}*

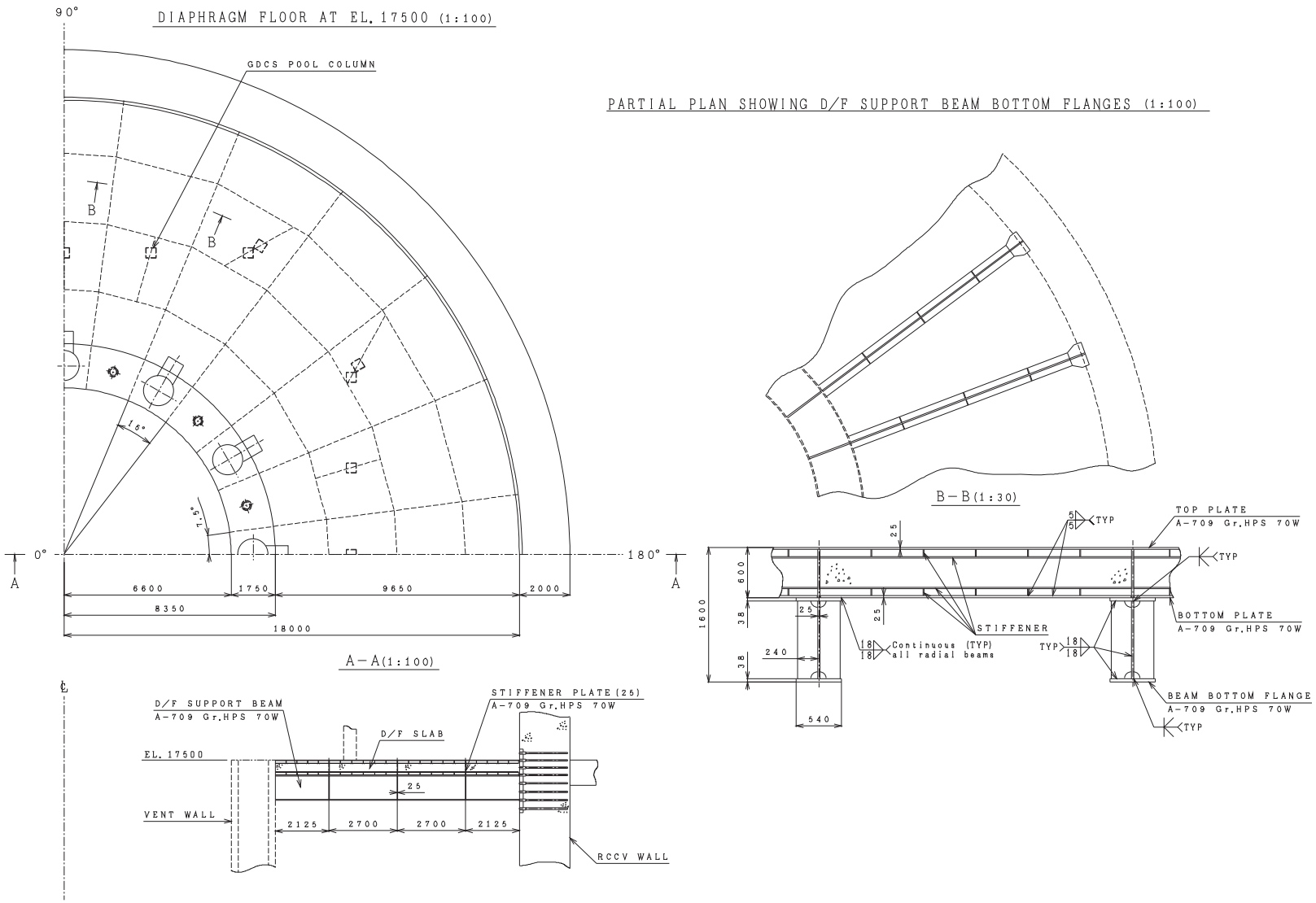


***Figure 3G.1-55. Diaphragm Floor***

*Note: All dimensions are in mm unless otherwise noted*

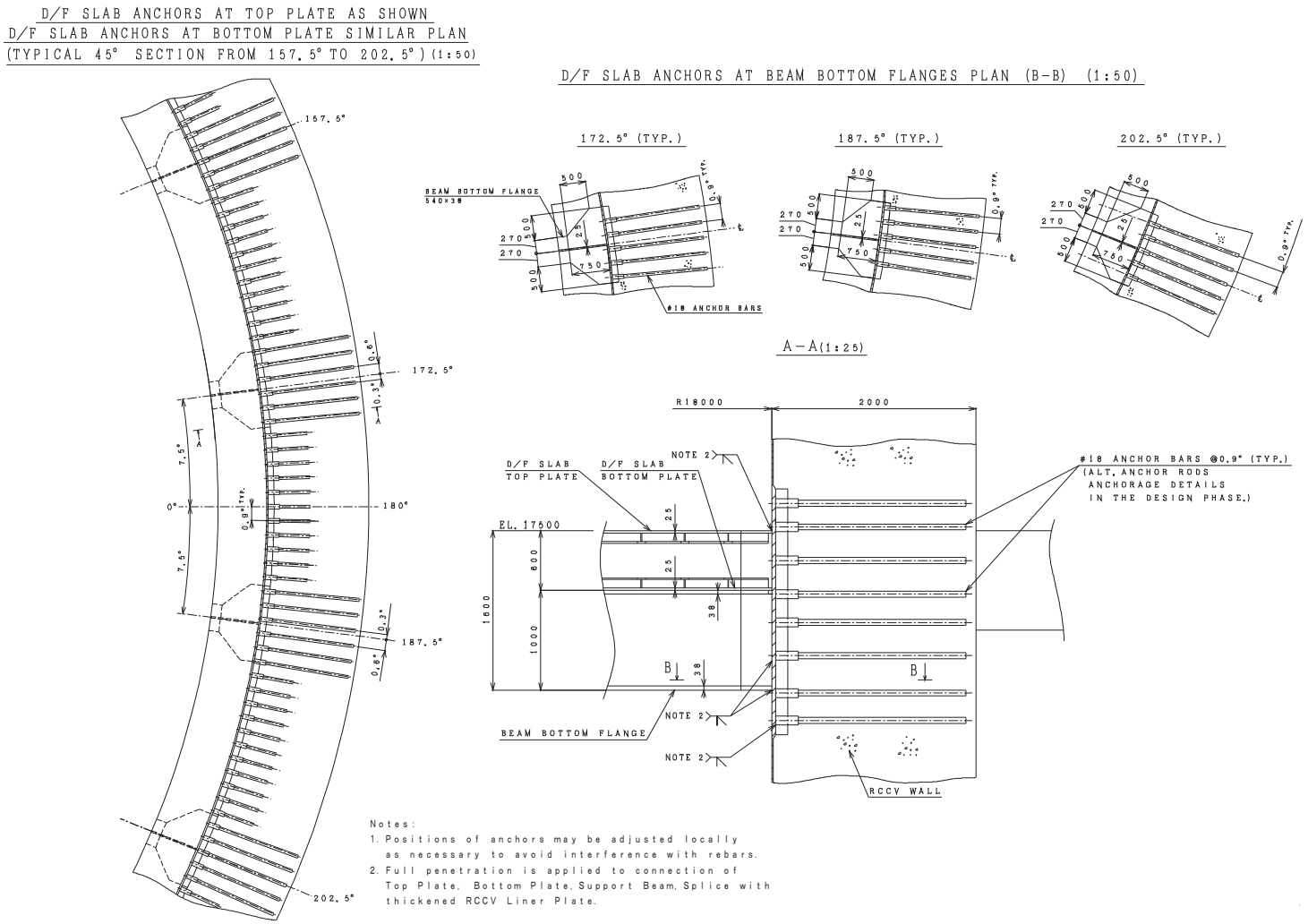


***Figure 3G.1-56. Diaphragm Floor Slab Anchor***

*Note: All dimensions are in mm unless otherwise noted*

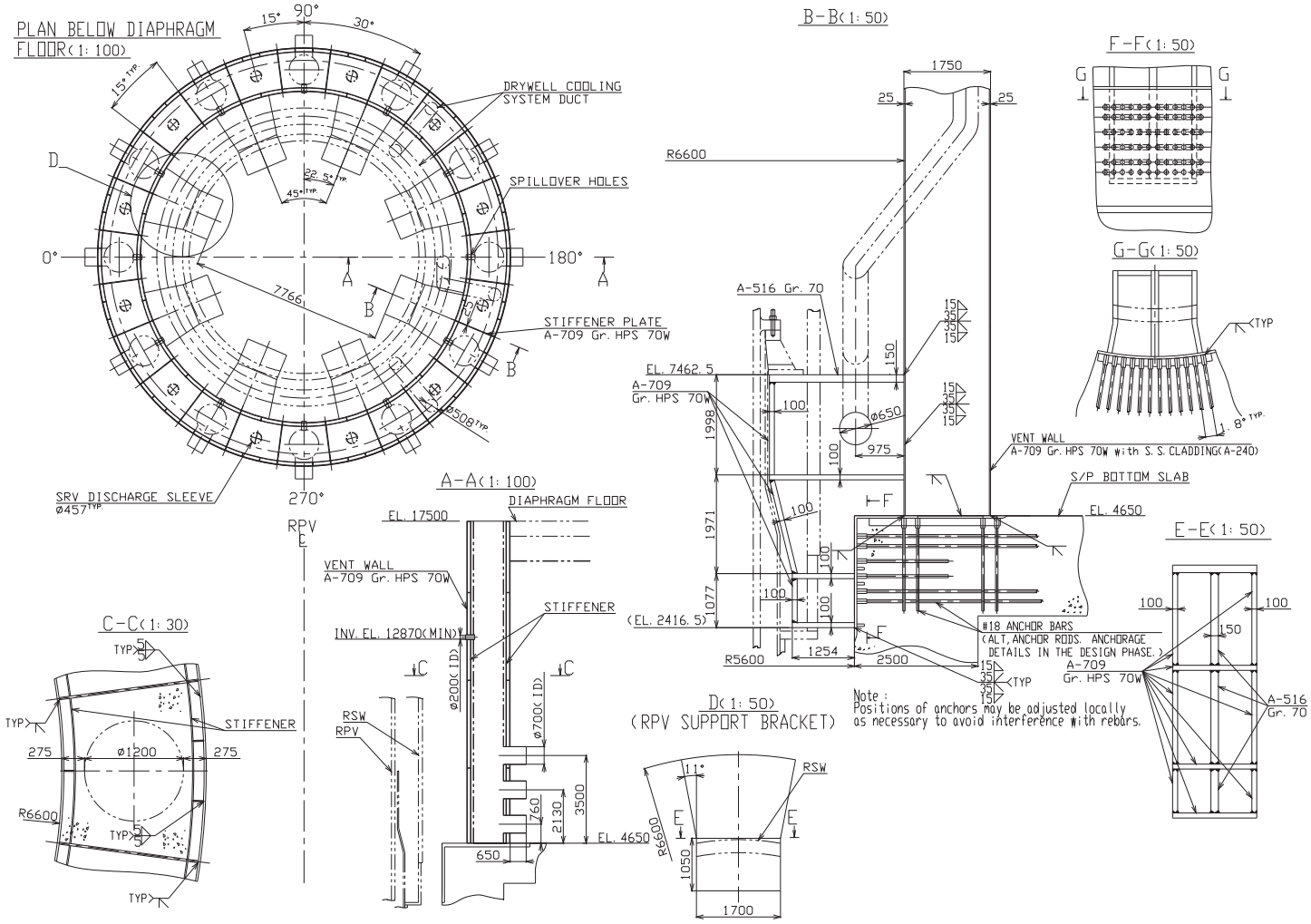


***Figure 3G.1-57. RPV Support Bracket & Vent Wall***

*Note: All dimensions are in mm unless otherwise noted*

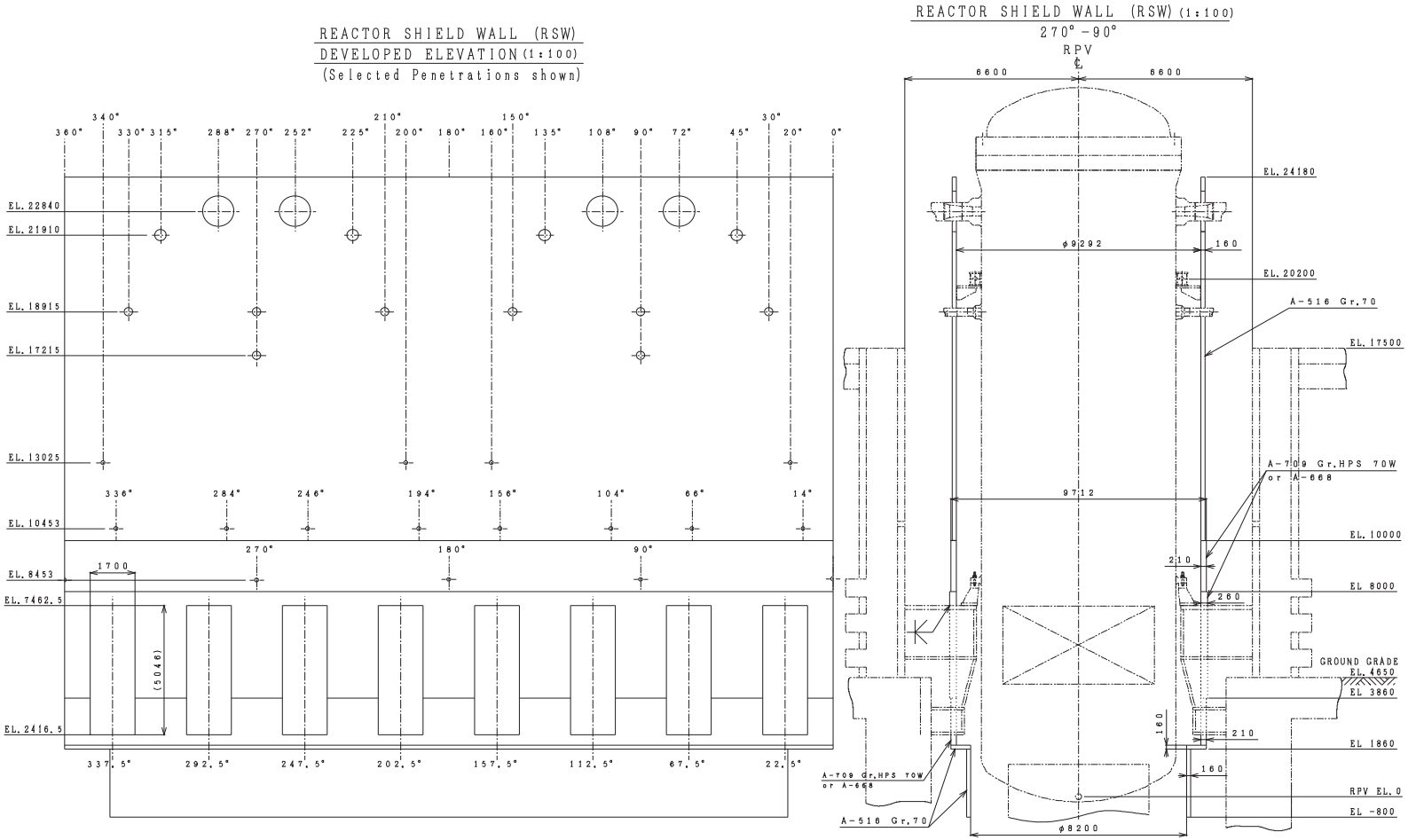


***Figure 3G.1-58. Reactor Shield Wall***

*Note: All dimensions are in mm unless otherwise noted*

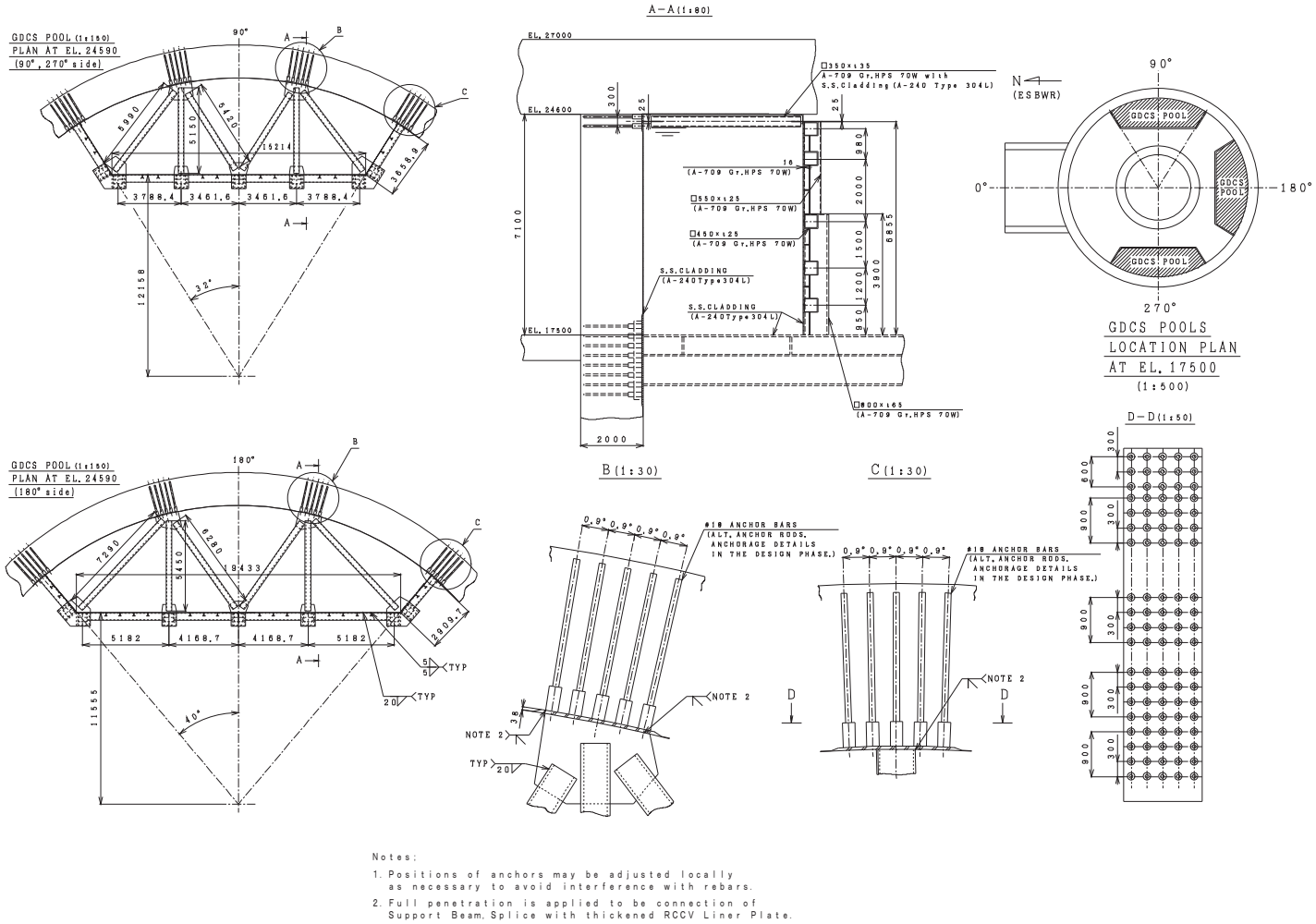


***Figure 3G.1-59. GDCS Pool***

*Note: All dimensions are in mm unless otherwise noted*

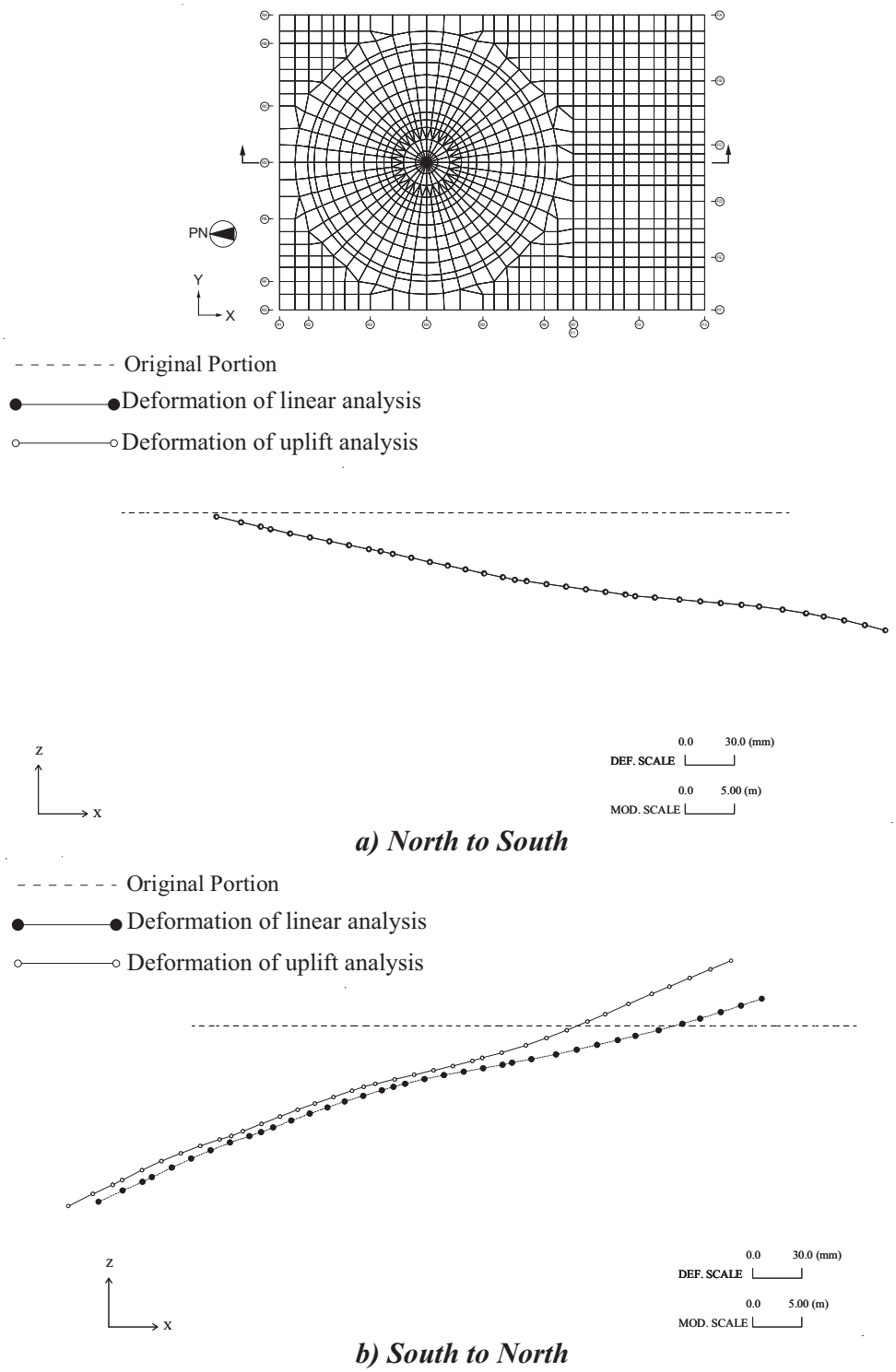


*Figure 3G.1-60. Comparison of Basemat Deformation without Tension Springs (NS Direction SSE)*

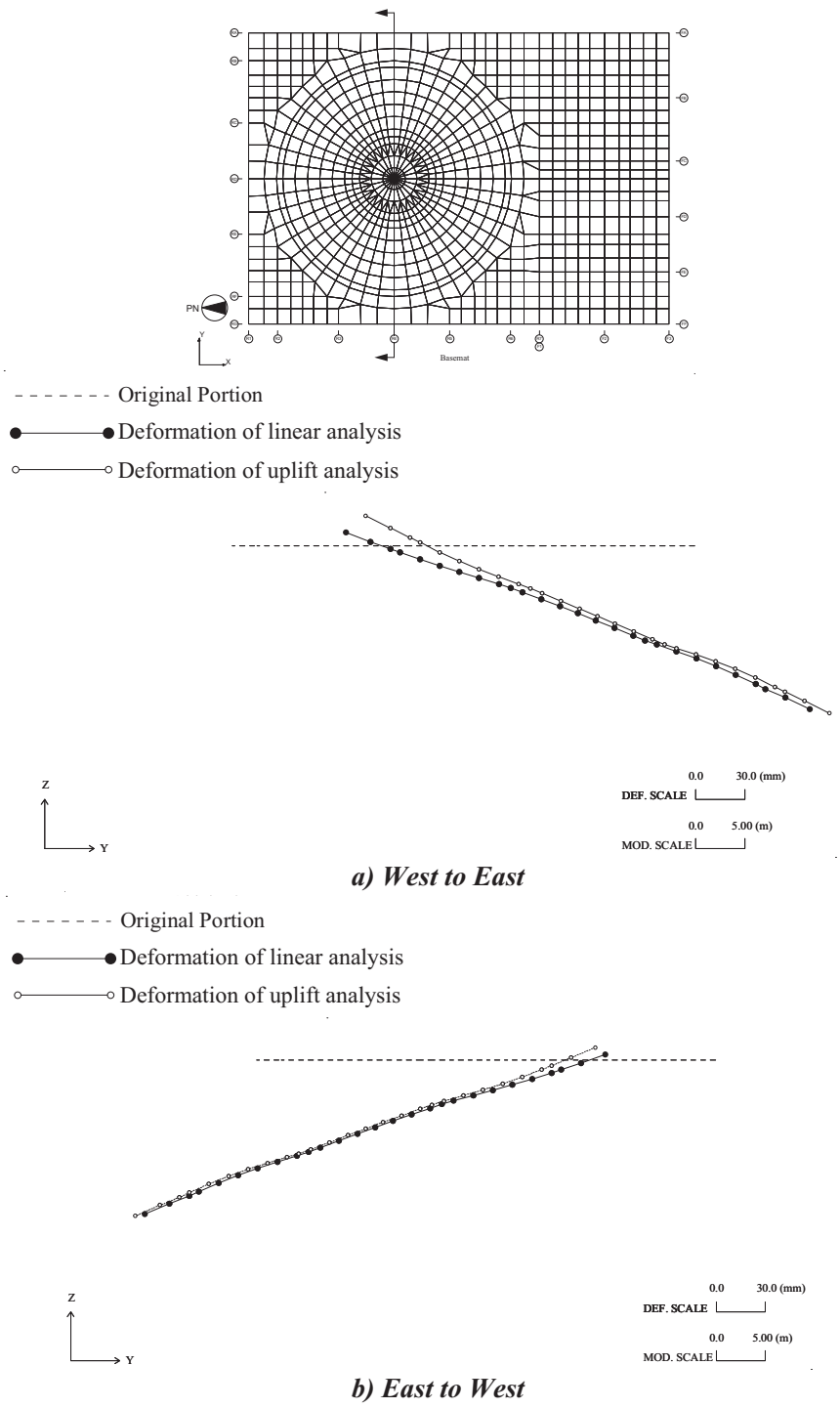


**Figure 3G.1-61. Comparison of Basemat Deformation without Tension Springs (EW Direction SSE)**

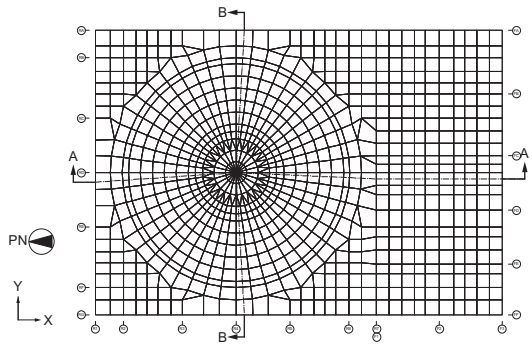


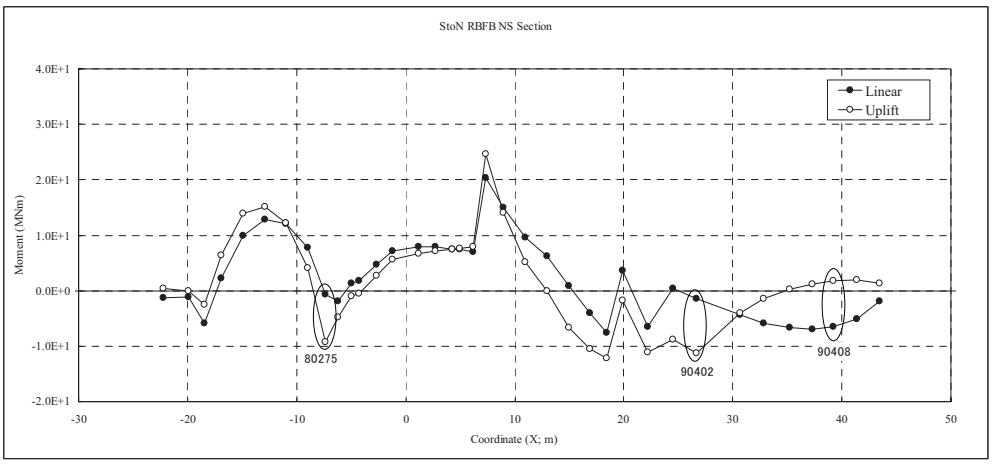


*a) Mx in A-A Section*

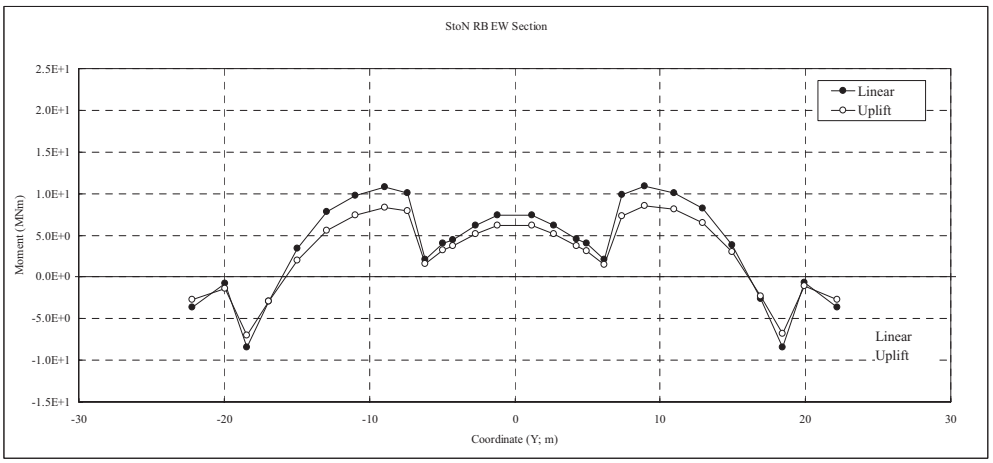


*b) My in B-B Section*

***Figure 3G.1-62. Comparison of Basemat Sectional Moments (S to N SSE)***

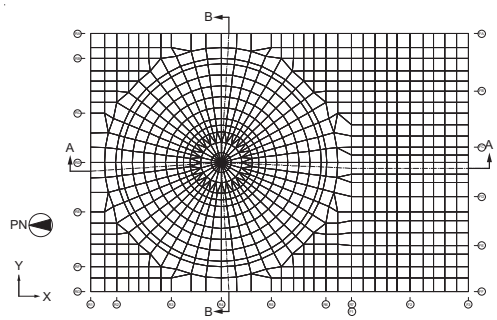


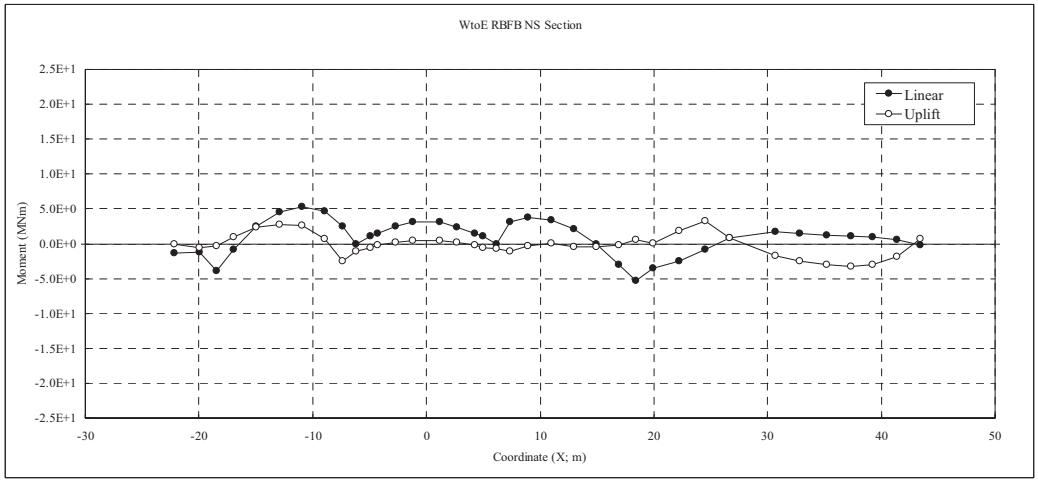


*a) Mx in A-A Section*

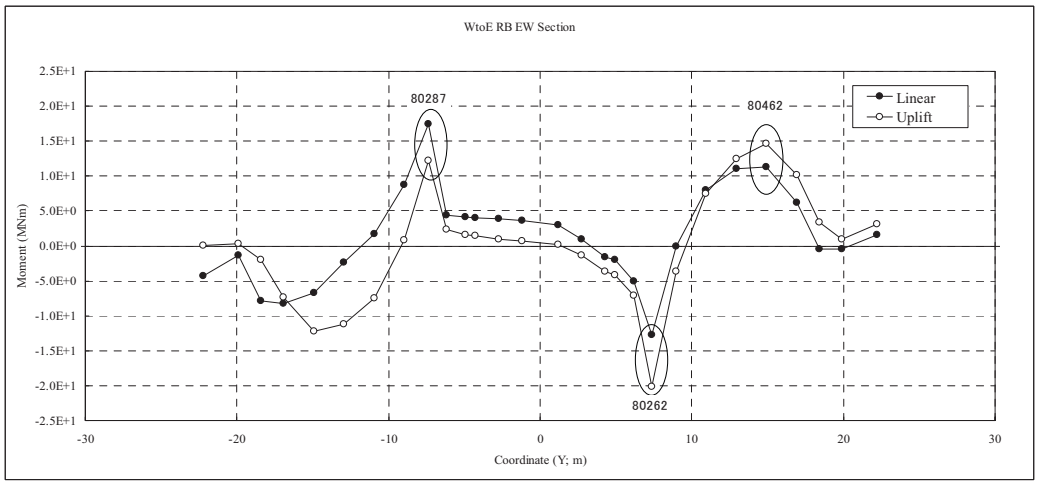


*b) My in B-B Section*

***Figure 3G.1-63. Comparison of Basemat Sectional Moments (W to E SSE)***

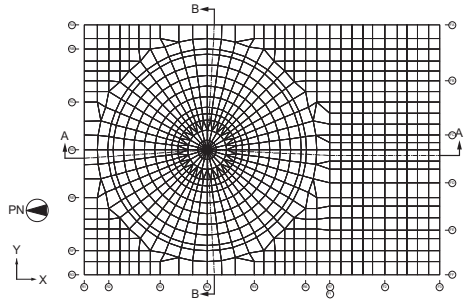


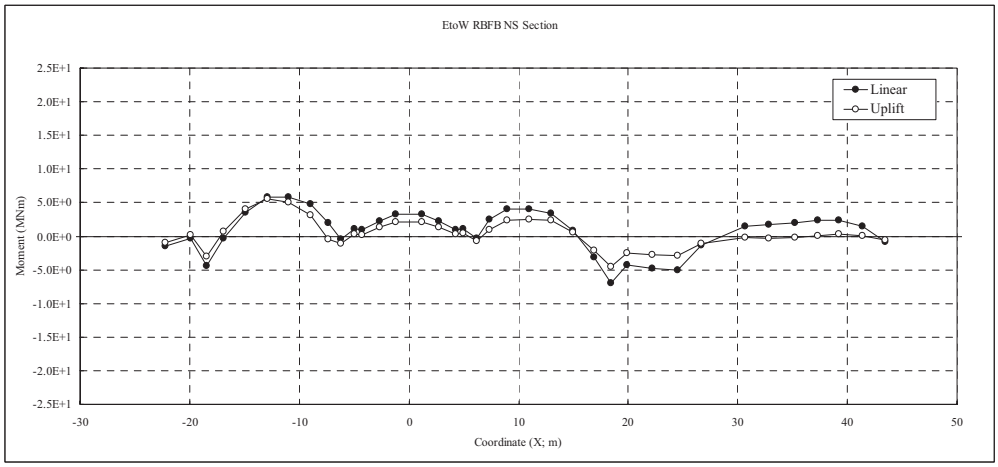


*a) Mx in A-A Section*

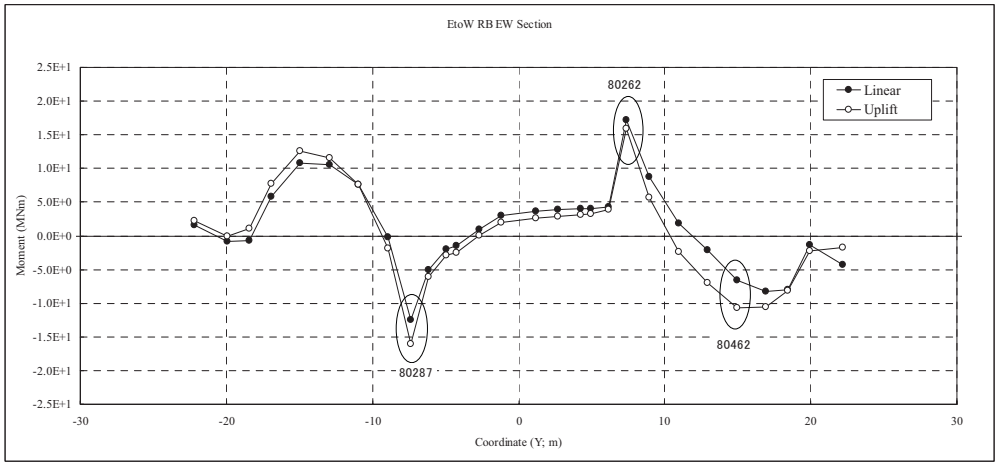


*b) My in B-B Section*

***Figure 3G.1-64. Comparison of Basemat Sectional Moments (E to W SSE)***

***Figure 3G.1-65. Deleted***

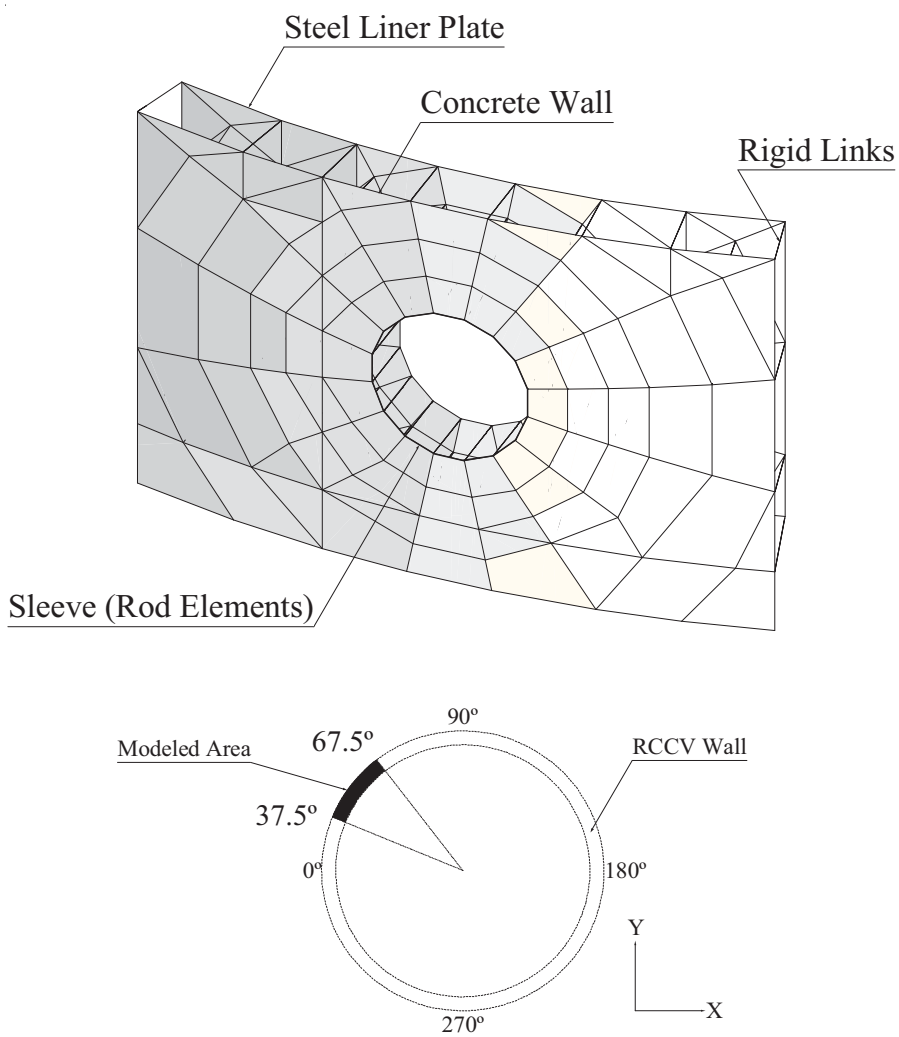


*Figure 3G.1-66. Detail Local Finite Element Model of RCCV Wall Around Upper Drywell Personnel Airlock Opening*

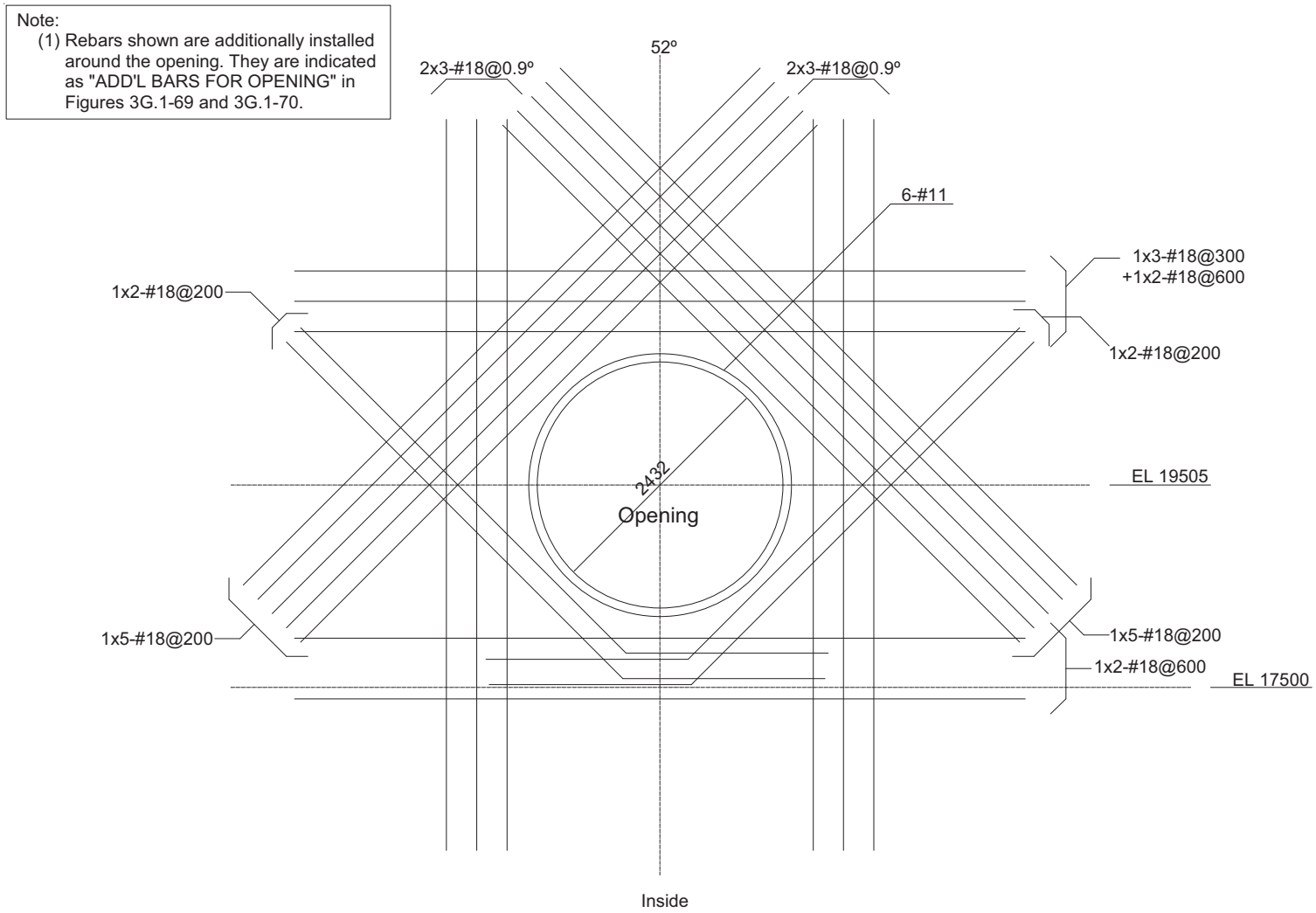


***Figure 3G.1-67. Additional Reinforcements in RCCV Wall Around Upper Drywell Personnel Airlock Opening (Inside Face)***

*Note: All dimensions are in mm unless otherwise noted*

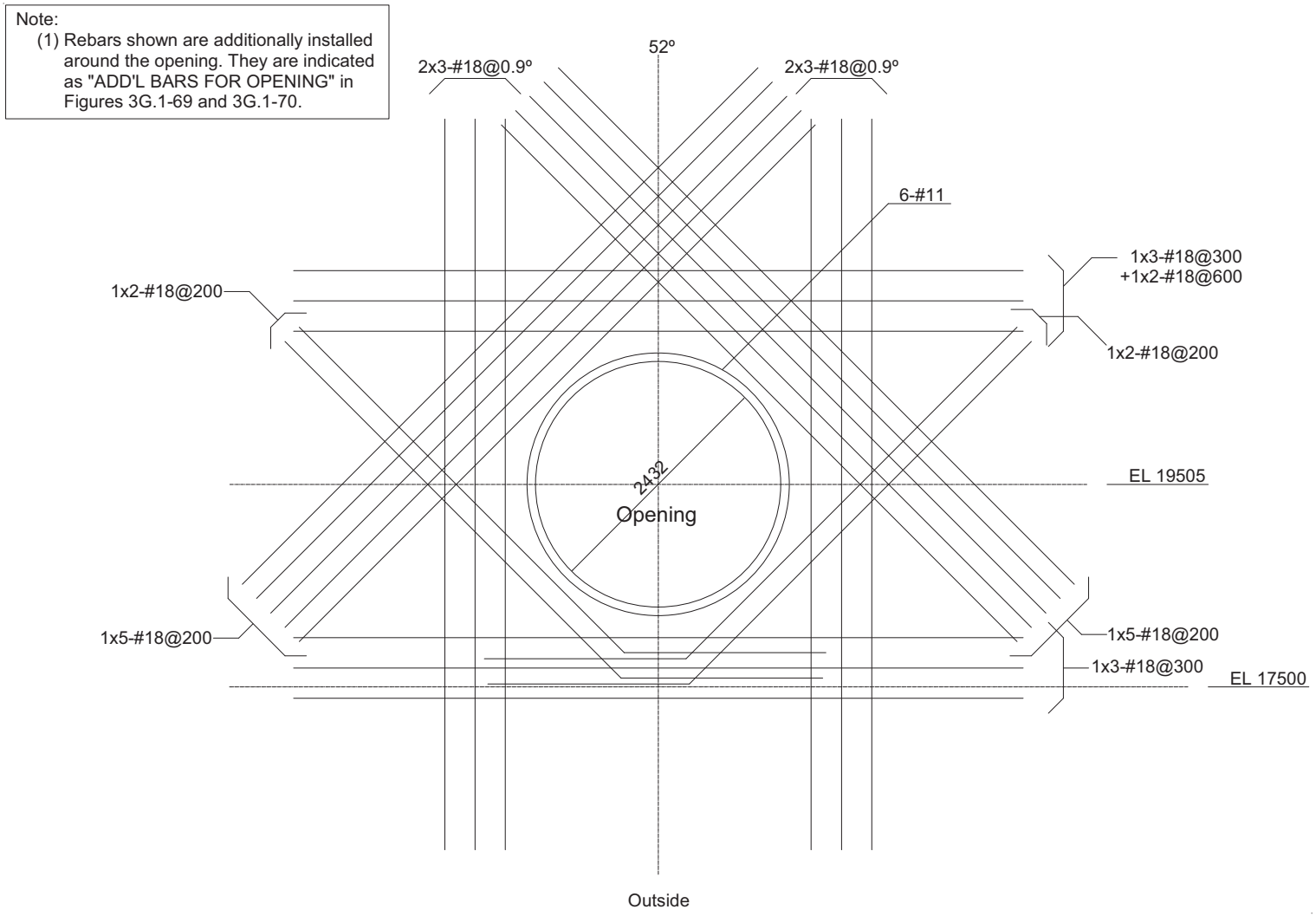


***Figure 3G.1-68. Additional Reinforcements in RCCV Wall Around Upper Drywell Personnel Airlock Opening (Outside Face)***

*Note: All dimensions are in mm unless otherwise noted*

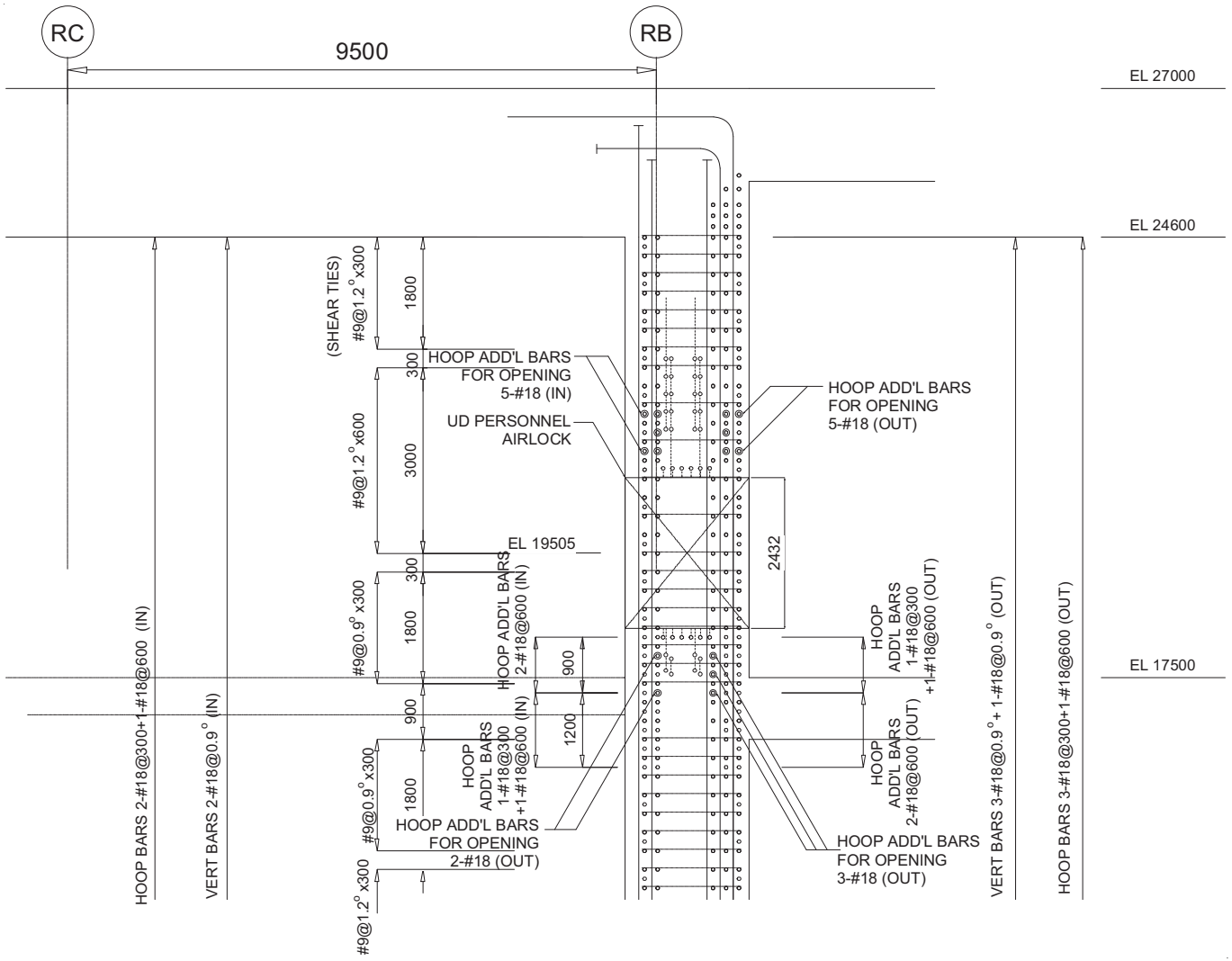


***Figure 3G.1-69. Reinforcements in RCCV Wall Around Upper Drywell Personal Airlock Opening (Section)***

*Global Note for Figure: Evaluation results of Subsection 3G.5.3 included.*

*Note: All dimensions are in mm unless otherwise noted*

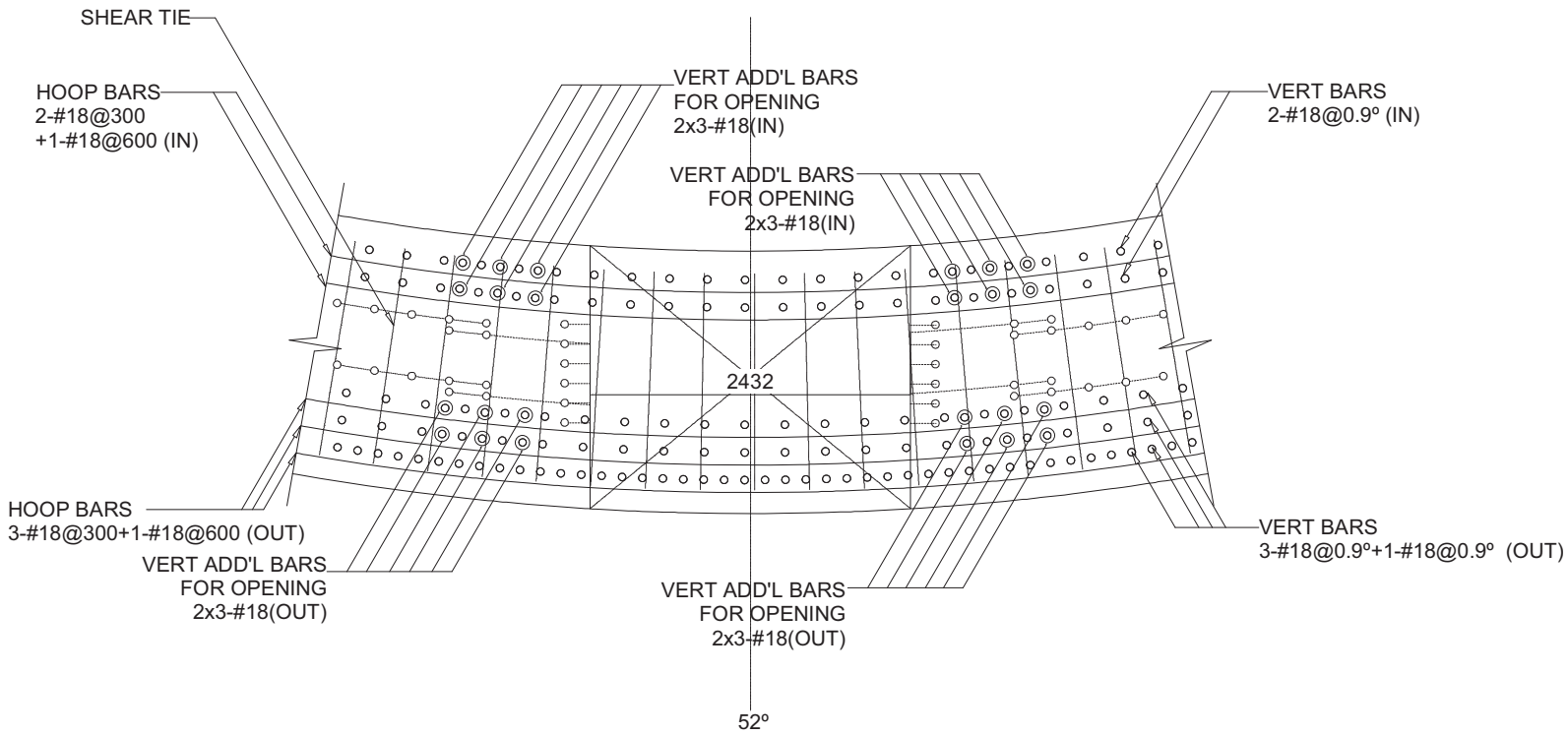


*Figure 3G.1-70. Reinforcements in RCCV Wall Around Upper Drywell Personnel Airlock Opening (Plan)*

***Figure 3G.1-71a. (Deleted)***

***Figure 3G.1-71b. (Deleted)***

***Figure 3G.1-72. (Deleted)***

## 3G.2 CONTROL BUILDING

### 3G.2.1 Objective and Scope

The objective of this subsection is to document the structural design details, inputs and analytical results from the analysis of the CB of the standard ESBWR plant. The scope includes the design and analysis of the structure for normal, severe environmental, extreme environmental, and construction loads.

### 3G.2.2 Conclusions

The following are the major summary conclusions on the design and analysis of the CB.

- Based on the results of finite element analyses performed in accordance with the design conditions identified in Subsection 3G.2.3, stresses in concrete and reinforcement are less than the allowable stresses per the applicable regulations, codes or standards listed in Section 3.8.
- The factors of safety against floatation, sliding, and overturning of the structure under various loading combinations are higher than the required minimum.
- The thickness of the roof slabs and exterior walls are more than the minimum required to preclude penetration, perforation or spalling resulting from impact of design basis tornado missiles.

### 3G.2.3 Structural Description

The CB houses the safety-related electrical, control and instrumentation equipment, the main control room for the Reactor and Turbine Buildings, and the CB heating, ventilation and air conditioning (HVAC) equipment. The CB is a Seismic Category I structure that houses control equipment and operation personnel.

The CB is a reinforced concrete box type shear wall structure consisting of walls and slabs and is supported by a foundation mat. Steel framing is composite with concrete slab and used to support the slabs for vertical loads. The CB is a shear wall structure designed to accommodate all seismic loads with its walls and the connected floors. Therefore, frame members such as beams or columns are designed to accommodate deformations of the walls in case of earthquake conditions. The CB is adjacent to but structurally independent of the RB (see Figures 1.2-2 through 1.2-5 and Figure 1.2-11).

The key dimensions of the CB are summarized in Table 3.8-8. Figures 3G.2-1 through 3G.2-3 show the outline drawings of the CB.

### 3G.2.4 Analytical Models

#### 3G.2.4.1 Structural Model

The CB is analyzed utilizing the finite element computer program NASTRAN. The finite element model consists of quadrilateral and beam elements. The quadrilateral elements are used to

*represent the slabs and walls. Beam elements are used to represent columns and beams. The model is shown in Figures 3G.2-4 to 3G.2-11. The model includes the whole (360°) portion of the CB taking the application of nonaxisymmetrical loads into consideration.*

*The nodal points are defined by a right hand Cartesian coordinate system X, Y, Z. This system, called the global coordinate system, has its origin located at the north-west corner of the CB at EL 0 mm. The positive X axis is in the south direction; the Y axis is in the east direction; the Z axis is vertical upward. This coordinate system is shown in Figure 3G.2-4.*

#### *3G.2.4.2 Foundation Models*

*The foundation soil is represented by soil springs. The spring constants for rocking and translations are determined based on the following soil parameters which correspond to the Soft Site conditions described in Appendix 3A:*

- *Shear wave velocity: 300 m/s (1000 ft/s)*
- *Unit weight: 19.6 kN/m$^3$ (125 lbf/ft$^3$)*
- *Shear modulus: 180 MN/m$^2$ (26110 psi)*
- *Poisson's Ratio: 0.478*

*Soil springs are attached to the bottom of the foundation mat, and the constraints by side soil are not included in the model. The values of the soil springs used in the analysis are shown in Table 3G.2-1. The springs have perfectly elastic stiffness.*

*These spring values are multiplied by the foundation mat nodal point tributary areas to compute the spring constants assigned to the base slab nodal points.*

### *3G.2.5 Structural Analysis and Design*

#### *3G.2.5.1 Site Design Parameters*

*The key site design parameters are described in Table 3G.1-2.*

#### *3G.2.5.2 Design Loads, Load Combinations, and Material Properties*

##### *3G.2.5.2.1 Design Loads*

###### *3G.2.5.2.1.1 Dead Load (D) and Live Load (L and $L_o$)*

*The weights of structures are evaluated using the following unit weights.*

- *reinforced concrete: 23.5 kN/m$^3$ (150 lbf/ft$^3$)*
- *steel: 77.0 kN/m$^3$ (490 lbf/ft$^3$)*

*Weights of major equipment, miscellaneous structures, piping, and commodities are summarized in Tables 3G.2-2 and 3G.2-3.*

*Live loads on the CB floor and roof slabs are described in Subsection 3.8.4.3.2.*

*3G.2.5.2.1.2 Snow and Rain Load*

*The snow and rain load is applied to the roof slab and is taken as shown in Table 3G.1-2.*

*3G.2.5.2.1.3 Lateral Soil Pressure at Rest*

*The lateral soil pressure at rest is applied to the external walls below grade and is based on soil property given in Table 3G.1-2. Pressures to be applied to the walls are provided in Figure 3G.2-12..*

*3G.2.5.2.1.4 Wind Load (W)*

*Wind load is applied to the roof slab and external walls above grade and is based on basic wind speed given in Table 3G.1-2.*

*3G.2.5.2.1.5 Tornado Load ($W_t$)*

*The tornado load is applied to the roof slab and external walls above grade and its characteristics are given in Table 3G.1-2. The tornado load, Wt, is further defined by the combinations described in Subsection 3G.1.5.2.1.5.*

*3G.2.5.2.1.6 Thermal Load ($T_o$ and $T_a$)*

*Thermal loads for the CB are evaluated for the normal operating conditions and abnormal (LOCA in combination with a loss of external alternating current power) conditions. Figure 3G.2-13. shows the section location for temperature distributions for various structural elements of the CB, and Table 3G.2-4 shows the magnitude of equivalent linear temperature distribution.*

*Stress-free temperature is 15.5°C (60°F).*

*3G.2.5.2.1.7 Design Seismic Loads*

*The design seismic loads are obtained by soil–structure interaction analyses, which are described in Appendix 3A. The seismic loads used for design are as follows:*

- *Figure 3G.2-14.: design seismic shears and moments*
- *Table 3G.2-5: maximum vertical acceleration*

*The seismic loads are composed of two perpendicular horizontal and one vertical components. The effects of the three components are combined based on the SRSS method as described in Subsection 3.8.1.3.6.*

*Seismic lateral soil pressure for wall design is provided in Figure 3G.2-15. using the enveloped pressure of the elastic procedure described in ASCE 4-98 Section 3.5.3.2 and SASSI results as described in Subsection 3A.8.8.*

*3G.2.5.2.2 Load Combinations and Acceptance Criteria*

*Table 3.8-15 gives load combinations for the safety-related reinforced concrete structure. Based on previous experience, critical load combinations are selected for the CB design. They are mainly*

*combinations including design basis accident (DBA) loads and seismic loads as shown in Table 3G.2-6. The acceptance criteria for the selected combinations are also included in Table 3G.2-6.*

#### *3G.2.5.2.3 Material Properties*

*Properties of the materials used for the CB design analyses are the same as those for the RB, and they are described in Subsection 3G.1.5.2.3.*

### *3G.2.5.3 Stability Requirements*

*The stability requirements for the CB foundation are same as those for the RB, and they are described in Subsection 3G.1.5.3.*

### *3G.2.5.4 Structural Design Evaluation*

*The evaluation of the Seismic Category I structures in the CB is performed using the same procedure as the RB, which is described in Subsection 3G.1.5.4.*

*The locations of the sections that are selected for evaluation are indicated in Figures 3G.2-5 through 11. They are selected, in principle, from the center and both ends of wall and slab, where it is reasonably expected that the critical stresses appear based on engineering experience and judgment. Tables 3G.2-7 through 3G.2-11 show the forces and moments at the selected sections from NASTRAN analysis. Element forces and moments listed in the tables are defined with relation to the element coordinate system shown in Figure 3G.2-16.. Tables 3G.2-12 through 3G.2-15 show the combined forces and moments in accordance with the selected load combinations listed in Table 3G.2-6.*

*Table 3G.2-16 lists the sectional thicknesses and rebar ratios used in the evaluation. The values are retrieved from the outline drawings shown in Figures 3G.2-1 through 3G.2-3.*

*Tables 3G.2-17 through 3G.2-24 compares the rebar and concrete stresses at these sections for the representative elements with the allowable stresses, which are conservatively taken to be the more limiting of ACI 349-01 and ASME Section III Division 2. Table 3G.2-25 summarizes evaluation results for transverse shear in accordance with ACI 349, Chapter 11.*

#### *3G.2.5.4.1 Shear Walls*

*The maximum rebar stress of 287.6 MPa (41.71 ksi) is found in the vertical rebar in the wall at EL -7400 due to the load combination CB-9 as shown in Table 3G.2-24. The maximum horizontal rebar stress is found to be 219.9 MPa (31.89 ksi) in the wall at EL 9060 due to the load combination CB-9. The maximum transverse shear force is found to be 0.791 MN/m (4.52 kips/in) against the shear strength of 2.235 MN/m (12.76 kips/in) in the wall at EL –2000 as shown in Table 3G.2-25.*

#### 3G.2.5.4.2 Floor Slabs

*The maximum rebar stress of 178.6 MPa (25.90 ksi) is found in the roof at EL 13800 due to the load combination CB-9 as shown in Table 3G.2-23. The maximum transverse shear force is found to be 0.318 MN/m (1.81 kips/in) against the shear strength of 0.354 MN/m (2.02 kips/in) at EL 4650 slab as shown in Table 3G.2-25.*

#### 3G.2.5.4.3 Foundation Mat

*The maximum rebar stress is found to be 265.0 MPa (38.44 ksi) due to the load combination CB-9 as shown in Table 3G.2-23. The maximum transverse shear force is found to be 3.159 MN/m (18.04 kips/in) against the shear strength of 4.943 MN/m (28.23 kips/in) as shown in Table 3G.2-25.*

### 3G.2.5.5 Foundation Stability

*The stabilities of the CB foundation against overturning, sliding and floatation are evaluated. The energy approach is used in calculating the factor of safety against overturning.*

*The factors of safety against overturning, sliding and floatation are given in Table 3G.2-26. All of these meet the acceptance criteria given in Table 3.8-14. The factor of safety against sliding is obtained according to the procedure shown in Subsection 3.8.5.5. The stress check is performed for the exterior walls against the wall capacity passive pressure. The results are shown in Table 3G.2-26a and 3G.2-26b.*

*Maximum soil bearing stress is found to be 292 kPa (6100 psf) due to dead plus live loads. Maximum bearing stresses for load combinations involving SSE are shown in Table 3G.2-27 for various site conditions.*

#### 3G.2.5.5.1 Foundation Settlement

*The basemat design is checked against the normal and differential settlement of the CB. It is found that the basemat can resist the maximum settlement at mat foundation corner of 18 mm (0.7 in.) and the settlement averaged at four corners of 12 mm (0.5 in.). The relative displacement between two corners along the longest dimension of the building basemat calculated under linearly varying soil stiffness is 14 mm (0.6 in). The estimated differential settlement between buildings (RB/FB and CB) is 85 mm (3.3 in.). These values are specified as maximum settlements in Table 2.0-1.*

### 3G.2.5.6 Tornado Missile Evaluation

*The CB is shown in Figure 3G.2-3. The minimum thickness required to prevent penetration, concrete spalling and scabbing is evaluated. The methods and procedures are shown in Subsection 3.5.3.1.1.*

## Table 3G.2-1 Soil Spring Constants for the CB Analysis Model

| Direction of Spring | | Loads | Stiffness ($MN/m/m^2$) |
|---|---|---|---|
| Horizontal | X-direction | All | 19.650 |
| | Y-direction | All | 20.378 |
| Vertical | | Horizontal Seismic Loads | 79.174 |
| | | Other Loads | 29.177 |

*SI to U.S. Customary units conversion (SI units are the controlling units and U.S. Customary units are for reference only): 1 $MN/m/m^2$= $6.366x10^3$ $lbf/ft/ft^2$*

## *Table 3G.2-2 Equipment Load of CB*

| Description | Weight | Remarks |
|---|---|---|
| Division Distributed Control and Information System (DCIS) Room | 216 kN | per one room |
| Main Control Room Display Consoles | 230 kN | |
| Nonsafety-related DCIS Room | 490 kN | per one room |
| HVAC Units | 1489 kN | total |

*SI to U.S. Customary units conversion (SI units are the controlling units and U.S. Customary units are for reference only): 1 $MN/m/m^2$= $6.366x10^3$ $lbf/ft/ft^2$*

## *Table 3G.2-3 Miscellaneous Structures, Piping, and Commodity Load of CB*

| Elevation (mm) | Area Load |
|---|---|
| 13,800 | 2.4 kN/m$^2$ (50psf) |
| 9,060 | 2.4 kN/m$^2$ (50psf) |
| 4,650 | 2.4 kN/m$^2$ (50psf) |
| -2,000 | 2.4 kN/m$^2$ (50psf) |
| -7,400 | 2.4 kN/m$^2$ (50psf) |

*SI to U.S. Customary units conversion (SI units are the controlling units and U.S. Customary units are for reference only): 1 MN/m/m$^2$= 6.366x10$^3$ lbf/ft/ft$^2$*

## Table 3G.2-4 Equivalent Linear Temperature Distributions at Various Sections

| Section(1) | Side(2) | | Equivalent Linear Temperature(3) (°C) | | | |
|---|---|---|---|---|---|---|
| | | | Normal Operation Winter | | DBA Winter | |
| | 1 | 2 | $T_d$ | $T_g$ | $T_d$ | $T_g$ |
| M1 | DCIS | GR | 18.1 | 5.1 | 31.5 | 32.0 |
| W1 | DCIS | GR | 17.7 | 4.4 | 29.2 | 27.4 |
| W2 | MCR | GR | 17.7 | 4.4 | 21.3 | 11.5 |
| W3 | DCIS | AT | -14.5 | 46.8 | -2.4 | 69.0 |
| W4 | HVAC | AT | -20.0 | 36.0 | -7.9 | 57.5 |
| S1 | MCR | DCIS | 21.0 | 0.0 | 40.0 | -10.3 |
| S2 | DCIS | MCR | 21.0 | 0.0 | 40.0 | 10.3 |
| S3 | HVAC | DCIS | 15.5 | -5.7 | 45.0 | -5.2 |
| S4 | AT | HVAC | -20.0 | -36.0 | -7.9 | -57.5 |

*(1) See Figure 3G.2-13. for the location of sections.*

*(2) MCR: Main Control Room*
*DCIS: Distributed Control and Information System*
*HVAC: Heating, Ventilation and Air Conditioning*
*AT: Air*
*GR: Ground*

*(3) $T_d$: Average Temperature*
*$T_g$: Surface Temperature Difference (positive when temperature at Side 1 is higher)*

*SI to U.S. Customary units conversion (SI units are the controlling units and U.S. Customary units are for reference only): 1 MN/m/m$^2$= 6.366x10$^3$ lbf/ft/ft$^2$*

## Table 3G.2-5 Maximum Vertical Acceleration

| Walls | | | Slabs | | |
|---|---|---|---|---|---|
| Elev. (m) | Node No. | Max. Vertical Acceleration (g) | Elev. (m) | Node No. | Max. Vertical Acceleration (g) |
| 13.80 | 6 | 1.00 | 13.80 | 9001 | 2.19 |
| 9.06 | 5 | 0.86 | | 9002 | 1.34 |
| 4.65 | 4 | 0.74 | | 9003 | 1.43 |
| -2.00 | 3 | 0.56 | 9.06 | 9101 | 2.00 |
| -7.40 | 2 | 0.51 | | 9102 | 1.26 |
| -10.40 | 1 | 0.51 | | 9103 | 1.43 |
| | | | 4.65 | 9201 | 1.30 |
| | | | | 92.02 | 1.43 |
| | | | -2.00 | 9301 | 1.39 |

*See Figure 3A.7-6 for the node numbers.*
*SI to U.S. Customary units conversion (SI units are the controlling units and U.S. Customary units are for reference only): 1m=3.28ft*

## Table 3G.2-6 Selected Load Combinations for the CB

| Category | Load Combination | | | | | | | | Acceptance Criteria(1) |
|---|---|---|---|---|---|---|---|---|---|
| | No. *2 | D | L | $T_o$ | $T_a$ | E' | W | $W_t$ | |
| Severe | CB-3 | 1.4 | 1.7 | | | | 1.7 | | U |
| Environmental | CB-4 | 1.05 | 1.3 | 1.3 | | | 1.3 | | U |
| Tornado | CB-7 | 1.0 | 1.0 | 1.0 | | | | 1.0 | U |
| LOCA + SSE | CB-9 | 1.0 | 1.0 | | 1.0 | 1.0 | | | U |

*(1) U = Conservatively taken as envelope of "Allowable Stress as in ASME Section III, Div. 2, Subsection CC-3420 for Factored Load Combination" and "Required section strength based on the strength design method per ACI 349-01."*

*(2) Based on Table 3.8-15.*

## Table 3G.2-7 Results of NASTRAN Analysis: Dead Load

| Location | Element ID | Nx (MN/m) | Ny (MN/m) | Nxy (MN/m) | Mx (MNm/m) | My (MNm/m) | Mxy (MNm/m) | Qx (MN/m) | Qy (MN/m) |
|---|---|---|---|---|---|---|---|---|---|
| Basemat EL-7.4m | 67 | 0.026 | -0.709 | 0.027 | -0.987 | -1.078 | 0.088 | 0.195 | -0.160 |
| | 72 | -0.050 | 0.071 | 0.010 | -0.469 | -0.218 | -0.025 | -0.623 | 0.037 |
| | 115 | -0.729 | -0.274 | 0.309 | -0.219 | -0.213 | -0.371 | -0.027 | -0.660 |
| | 120 | -0.058 | -0.027 | -0.157 | -0.110 | -0.173 | 0.675 | -0.033 | -0.021 |
| Slab B1F EL-2.0m | 567 | -0.004 | 0.729 | -0.044 | -0.049 | -0.023 | -0.009 | -0.077 | 0.022 |
| | 572 | 0.080 | 0.122 | -0.012 | -0.021 | -0.017 | 0.008 | 0.100 | -0.006 |
| | 615 | 0.167 | 0.128 | -0.255 | -0.034 | -0.006 | 0.026 | -0.042 | 0.004 |
| | 620 | 0.040 | 0.042 | 0.056 | -0.024 | -0.024 | -0.029 | 0.034 | 0.039 |
| Slab 1F EL4.65m | 1067 | 0.071 | 0.031 | -0.002 | 0.168 | 0.058 | -0.011 | 0.030 | 0.025 |
| | 1072 | -0.013 | 0.032 | 0.002 | -0.028 | -0.009 | 0.000 | 0.073 | 0.005 |
| | 1115 | 0.110 | 0.008 | 0.010 | -0.016 | -0.152 | -0.009 | -0.001 | 0.144 |
| | 1120 | 0.020 | 0.015 | 0.055 | -0.016 | -0.015 | -0.015 | 0.019 | 0.025 |
| Slab 2F EL9.06m | 1567 | 0.012 | 0.061 | -0.002 | 0.081 | 0.002 | -0.004 | 0.016 | 0.010 |
| | 1572 | 0.018 | -0.006 | 0.001 | -0.030 | -0.012 | 0.000 | 0.061 | 0.001 |
| | 1615 | 0.136 | 0.114 | -0.025 | -0.007 | -0.117 | -0.007 | 0.007 | 0.128 |
| | 1620 | 0.015 | 0.009 | 0.018 | -0.015 | -0.015 | -0.014 | 0.017 | 0.022 |
| Roof EL13.8m | 1867 | -0.081 | -0.055 | 0.003 | 0.152 | 0.050 | -0.007 | 0.023 | 0.004 |
| | 1872 | -0.033 | -0.104 | 0.003 | -0.029 | -0.015 | 0.006 | 0.057 | 0.001 |
| | 1915 | -0.074 | -0.105 | -0.001 | -0.004 | -0.122 | -0.008 | -0.004 | 0.136 |
| | 1920 | -0.010 | -0.043 | 0.012 | -0.017 | -0.015 | -0.037 | 0.016 | 0.021 |
| Wall EL-7.4m to EL-2.0m | 6007 | -0.263 | -0.753 | -0.224 | -0.014 | 0.097 | -0.006 | -0.059 | 0.070 |
| | 4006 | 0.028 | -0.925 | 0.015 | -0.035 | -0.188 | 0.001 | -0.002 | -0.045 |
| | 4010 | 0.070 | -0.211 | -0.113 | 0.016 | -0.073 | -0.007 | -0.034 | -0.042 |
| Wall EL-2.0m to EL4.65m | 6043 | 0.172 | -1.275 | -0.295 | 0.041 | 0.025 | 0.008 | 0.044 | 0.002 |
| | 4036 | 0.070 | -0.620 | -0.007 | 0.021 | 0.116 | -0.002 | -0.002 | 0.036 |
| | 4040 | -0.018 | -0.362 | 0.045 | -0.005 | 0.028 | 0.014 | 0.019 | 0.021 |
| Wall EL4.65m to EL9.06m | 6081 | 0.006 | -0.592 | -0.031 | -0.014 | -0.116 | -0.007 | 0.000 | -0.062 |
| | 4066 | -0.012 | -0.338 | 0.004 | 0.005 | 0.022 | -0.002 | -0.002 | 0.018 |
| | 4070 | -0.016 | -0.263 | 0.095 | -0.003 | 0.007 | 0.001 | 0.006 | 0.007 |
| Wall EL9.06m to EL13.8m | 6117 | -0.003 | -0.330 | -0.053 | -0.009 | -0.060 | 0.005 | 0.005 | -0.077 |
| | 4096 | -0.067 | -0.164 | 0.001 | 0.006 | 0.033 | 0.000 | -0.002 | 0.038 |
| | 4100 | -0.009 | -0.113 | 0.083 | 0.003 | 0.009 | -0.001 | -0.001 | 0.010 |

*SI to U.S. Customary units conversion (SI units are the controlling units and U.S. Customary units are for reference only):*
*1 MN/m = $6.852 \times 10^4$ lbf/ft*
*1 MNm/m = $2.248 \times 10^5$ lbf-ft/ft*

## Table 3G.2-8 Results of NASTRAN Analysis: Thermal Load (LOCA: Winter)

| Location | Element ID | Nx (MN/m) | Ny (MN/m) | Nxy (MN/m) | Mx (MNm/m) | My (MNm/m) | Mxy (MNm/m) | Qx (MN/m) | Qy (MN/m) |
|---|---|---|---|---|---|---|---|---|---|
| Basemat EL-7.4m | 67 | -0.409 | -1.291 | 0.169 | 6.783 | 6.419 | -0.132 | 0.291 | -0.113 |
| | 72 | -0.189 | -0.279 | 0.059 | 1.916 | 5.868 | -0.007 | 0.290 | 0.127 |
| | 115 | -0.198 | -0.082 | 0.185 | 6.662 | 2.336 | -0.255 | 0.533 | 0.941 |
| | 120 | -0.949 | -1.034 | -0.271 | 3.316 | 3.332 | 1.777 | 1.350 | 1.269 |
| Slab B1F EL-2.0m | 567 | -0.720 | 0.380 | 0.045 | -0.078 | -0.091 | 0.002 | -0.003 | 0.006 |
| | 572 | 0.331 | -0.756 | -0.056 | -0.030 | -0.063 | 0.003 | -0.023 | 0.000 |
| | 615 | -0.858 | 0.641 | -0.723 | -0.078 | -0.033 | 0.006 | -0.032 | -0.073 |
| | 620 | -0.970 | -0.965 | -1.402 | -0.066 | -0.065 | 0.009 | 0.007 | 0.005 |
| Slab 1F EL4.65m | 1067 | -1.315 | -0.447 | -0.012 | 0.062 | 0.026 | 0.001 | 0.003 | -0.003 |
| | 1072 | -0.170 | -1.780 | -0.097 | 0.184 | 0.081 | 0.007 | -0.061 | -0.001 |
| | 1115 | -1.419 | 0.046 | 0.018 | 0.065 | 0.113 | 0.002 | -0.008 | -0.017 |
| | 1120 | -1.987 | -1.963 | -2.417 | 0.130 | 0.129 | -0.007 | -0.033 | -0.031 |
| Slab 2F EL9.06m | 1567 | -2.552 | -1.076 | 0.015 | -0.027 | -0.087 | 0.002 | 0.004 | 0.000 |
| | 1572 | -0.679 | -3.420 | -0.099 | 0.070 | -0.022 | 0.008 | -0.099 | 0.006 |
| | 1615 | -2.425 | 0.082 | -0.110 | 0.043 | 0.193 | -0.031 | 0.036 | -0.087 |
| | 1620 | -3.153 | -3.133 | -4.149 | -0.051 | -0.057 | 0.025 | 0.020 | 0.029 |
| Roof EL13.8m | 1867 | 1.500 | 1.282 | -0.012 | -0.783 | -1.023 | 0.001 | 0.015 | -0.006 |
| | 1872 | 1.774 | 1.355 | 0.412 | -0.232 | -0.745 | 0.032 | -0.330 | 0.023 |
| | 1915 | 1.949 | 1.114 | 0.485 | -0.695 | -0.400 | 0.008 | 0.017 | -0.146 |
| | 1920 | -0.003 | -0.164 | 0.493 | -0.634 | -0.644 | -0.022 | -0.011 | 0.005 |
| Wall EL-7.4m to EL-2.0m | 6007 | 0.521 | 1.371 | -0.057 | 0.642 | 0.904 | 0.004 | -0.032 | 0.165 |
| | 4006 | 0.756 | -0.069 | 0.091 | -0.688 | -1.068 | -0.002 | -0.001 | -0.194 |
| | 4010 | 1.043 | 1.253 | -0.324 | -0.531 | -0.881 | -0.042 | -0.156 | -0.334 |
| Wall EL-2.0m to EL4.65m | 6043 | 2.535 | -1.168 | -0.671 | 0.378 | 0.483 | -0.026 | 0.127 | 0.061 |
| | 4036 | 2.463 | -0.411 | -0.013 | -0.289 | -0.300 | 0.001 | 0.031 | 0.070 |
| | 4040 | 1.381 | 1.392 | -0.606 | -0.080 | -0.300 | -0.047 | -0.217 | -0.181 |
| Wall EL4.65m to EL9.06m | 6081 | 5.519 | -0.786 | 0.338 | 1.391 | 1.000 | 0.007 | -0.048 | -0.161 |
| | 4066 | 6.358 | -0.464 | -0.042 | -1.488 | -1.021 | 0.000 | -0.021 | 0.188 |
| | 4070 | 3.596 | 1.323 | -1.489 | -1.232 | -1.167 | -0.021 | -0.332 | -0.163 |
| Wall EL9.06m to EL13.8m | 6117 | 3.560 | -0.619 | -1.500 | 0.908 | 1.500 | -0.022 | -0.038 | 0.385 |
| | 4096 | 3.980 | -0.285 | -0.182 | -0.936 | -1.566 | -0.001 | 0.034 | -0.463 |
| | 4100 | 2.844 | 1.752 | -1.526 | -0.681 | -1.227 | -0.002 | -0.347 | -0.594 |

*SI to U.S. Customary units conversion (SI units are the controlling units and U.S. Customary units are for reference only):*
*1 MN/m = $6.852 \times 10^4$ lbf/ft*
*1 MNm/m = $2.248 \times 10^5$ lbf-ft/ft*

## Table 3G.2-9 Results of NASTRAN Analysis: Seismic Load (Horizontal: North to South Direction)

| Location | Element ID | Nx (MN/m) | Ny (MN/m) | Nxy (MN/m) | Mx (MNm/m) | My (MNm/m) | Mxy (MNm/m) | Qx (MN/m) | Qy (MN/m) |
|---|---|---|---|---|---|---|---|---|---|
| Basemat EL-7.4m | 67 | -0.155 | -0.143 | 0.233 | -0.512 | -0.370 | -0.269 | 0.859 | -0.028 |
| | 72 | -0.182 | -3.719 | 0.007 | -2.010 | -1.590 | 0.053 | -1.588 | 0.017 |
| | 115 | -0.170 | -0.077 | 2.424 | 0.102 | 0.016 | -2.587 | 1.271 | -0.178 |
| | 120 | 0.089 | -0.838 | 0.275 | -0.843 | -0.343 | 0.471 | 0.143 | -0.893 |
| Slab B1F EL-2.0m | 567 | 0.031 | -0.010 | 0.020 | 0.070 | 0.000 | -0.014 | 0.023 | -0.015 |
| | 572 | 0.279 | 0.227 | -0.049 | -0.007 | -0.007 | -0.001 | -0.003 | 0.003 |
| | 615 | -0.022 | 0.004 | -0.302 | 0.041 | 0.001 | 0.010 | 0.039 | 0.009 |
| | 620 | 0.226 | 0.087 | -0.196 | -0.015 | 0.018 | 0.001 | 0.018 | -0.021 |
| Slab 1F EL4.65m | 1067 | 0.030 | -0.018 | 0.029 | -0.005 | -0.005 | -0.003 | 0.008 | -0.001 |
| | 1072 | 0.220 | 0.276 | -0.047 | 0.017 | -0.003 | 0.001 | -0.012 | 0.001 |
| | 1115 | 0.018 | -0.009 | -0.262 | -0.006 | 0.003 | -0.004 | 0.002 | -0.001 |
| | 1120 | 0.140 | 0.057 | -0.076 | -0.008 | 0.012 | 0.002 | 0.012 | -0.014 |
| Slab 2F EL9.06m | 1567 | 0.029 | -0.033 | 0.017 | -0.005 | -0.005 | -0.003 | 0.010 | 0.000 |
| | 1572 | 0.160 | 0.325 | -0.026 | 0.016 | -0.003 | 0.001 | -0.018 | 0.002 |
| | 1615 | -0.326 | -0.062 | 0.018 | -0.011 | 0.002 | -0.003 | 0.005 | 0.000 |
| | 1620 | 0.092 | 0.070 | -0.097 | -0.007 | 0.011 | 0.002 | 0.011 | -0.012 |
| Roof EL13.8m | 1867 | 0.043 | 0.020 | -0.008 | -0.013 | -0.012 | -0.006 | 0.019 | -0.001 |
| | 1872 | 0.339 | 0.742 | 0.021 | 0.030 | -0.011 | 0.004 | -0.033 | 0.003 |
| | 1915 | 0.097 | 0.019 | -0.352 | -0.009 | 0.005 | -0.015 | 0.000 | -0.002 |
| | 1920 | 0.131 | 0.164 | 0.003 | -0.006 | 0.013 | 0.006 | 0.012 | -0.011 |
| Wall EL-7.4m to EL-2.0m | 6007 | 0.128 | -0.241 | 2.677 | -0.072 | 0.043 | -0.015 | -0.090 | 0.039 |
| | 4006 | -0.916 | -2.387 | -0.034 | 0.015 | 0.064 | -0.002 | 0.001 | 0.048 |
| | 4010 | -0.184 | -0.785 | -0.807 | 0.043 | 0.042 | -0.025 | 0.017 | 0.014 |
| Wall EL-2.0m to EL4.65m | 6043 | 0.012 | -0.043 | 1.834 | -0.003 | -0.015 | 0.012 | 0.006 | -0.004 |
| | 4036 | 0.138 | -1.780 | -0.107 | -0.025 | -0.097 | -0.001 | -0.006 | -0.027 |
| | 4040 | 0.035 | -0.613 | -1.095 | 0.003 | -0.034 | -0.013 | -0.032 | -0.033 |
| Wall EL4.65m to EL9.06m | 6081 | 0.432 | -0.260 | 1.027 | 0.005 | 0.030 | -0.003 | 0.000 | 0.017 |
| | 4066 | 0.440 | -0.799 | -0.108 | -0.006 | 0.012 | 0.001 | -0.003 | 0.005 |
| | 4070 | 0.077 | -0.425 | -0.869 | 0.002 | 0.005 | -0.001 | -0.010 | -0.005 |
| Wall EL9.06m to EL13.8m | 6117 | -0.267 | 0.067 | 0.567 | 0.000 | 0.006 | 0.001 | -0.001 | 0.014 |
| | 4096 | 0.532 | -0.335 | -0.079 | -0.008 | -0.027 | 0.001 | -0.002 | -0.025 |
| | 4100 | 0.098 | -0.254 | -0.560 | -0.002 | -0.005 | -0.002 | -0.009 | -0.007 |

*SI to U.S. Customary units conversion (SI units are the controlling units and U.S. Customary units are for reference only):*
*1 MN/m = $6.852 \times 10^4$ lbf/ft*
*1 MNm/m = $2.248 \times 10^5$ lbf-ft/ft*

## Table 3G.2-10 Results of NASTRAN Analysis: Seismic Load (Horizontal: East to West Direction)

| Location | Element ID | Nx (MN/m) | Ny (MN/m) | Nxy (MN/m) | Mx (MNm/m) | My (MNm/m) | Mxy (MNm/m) | Qx (MN/m) | Qy (MN/m) |
|---|---|---|---|---|---|---|---|---|---|
| Basemat EL-7.4m | 67 | -0.148 | 0.283 | -0.555 | -0.606 | -2.018 | -0.039 | -0.694 | 2.653 |
| | 72 | -0.033 | 0.005 | 2.068 | -0.075 | -0.214 | -2.322 | -0.154 | 0.942 |
| | 115 | -3.312 | -0.365 | -0.115 | -0.203 | -0.850 | -0.142 | 0.459 | -0.754 |
| | 120 | -0.807 | 0.212 | 0.188 | -0.323 | -0.775 | 0.190 | -1.080 | 0.056 |
| Slab B1F EL-2.0m | 567 | -0.010 | -0.045 | 0.506 | -0.029 | -0.085 | -0.019 | -0.019 | 0.134 |
| | 572 | 0.012 | 0.011 | 0.297 | 0.002 | 0.000 | -0.001 | -0.001 | -0.002 |
| | 615 | -0.253 | 0.278 | 0.415 | -0.008 | -0.028 | -0.001 | 0.002 | 0.016 |
| | 620 | 0.077 | 0.148 | 0.265 | 0.016 | -0.020 | -0.002 | -0.023 | 0.022 |
| Slab 1F EL4.65m | 1067 | 0.005 | 0.021 | -0.026 | -0.002 | -0.001 | -0.002 | -0.001 | 0.000 |
| | 1072 | 0.002 | 0.007 | -0.282 | 0.001 | 0.000 | -0.002 | -0.001 | -0.002 |
| | 1115 | 0.324 | 0.161 | 0.000 | -0.014 | -0.040 | 0.000 | -0.002 | 0.015 |
| | 1120 | 0.057 | 0.121 | -0.150 | 0.011 | -0.019 | 0.000 | -0.019 | 0.019 |
| Slab 2F EL9.06m | 1567 | 0.015 | 0.038 | -0.040 | -0.001 | 0.000 | -0.001 | 0.000 | 0.000 |
| | 1572 | 0.004 | 0.004 | -0.371 | 0.001 | 0.000 | -0.002 | -0.001 | -0.001 |
| | 1615 | 0.728 | 0.223 | 0.036 | -0.002 | -0.015 | 0.001 | 0.005 | 0.005 |
| | 1620 | 0.082 | 0.118 | -0.167 | 0.009 | -0.013 | -0.001 | -0.015 | 0.014 |
| Roof EL13.8m | 1867 | 0.054 | 0.028 | -0.056 | -0.002 | 0.000 | -0.001 | 0.000 | 0.002 |
| | 1872 | 0.005 | -0.003 | -0.478 | 0.001 | 0.000 | -0.007 | 0.000 | -0.004 |
| | 1915 | 1.145 | 0.271 | -0.005 | -0.009 | -0.028 | 0.001 | 0.001 | 0.007 |
| | 1920 | 0.207 | 0.077 | -0.038 | 0.008 | -0.015 | -0.004 | -0.016 | 0.012 |
| Wall EL-7.4m to EL-2.0m | 6007 | -1.288 | -1.359 | 0.050 | -0.025 | -0.006 | -0.006 | -0.007 | 0.031 |
| | 4006 | 0.066 | -0.181 | 2.155 | -0.009 | -0.028 | 0.018 | 0.010 | -0.011 |
| | 4010 | 0.213 | -1.042 | 0.804 | -0.043 | -0.132 | 0.007 | -0.048 | -0.058 |
| Wall EL-2.0m to EL4.65m | 6043 | -0.618 | -1.109 | -0.069 | -0.076 | -0.155 | 0.010 | -0.042 | -0.073 |
| | 4036 | 0.025 | -0.098 | 1.955 | 0.000 | 0.002 | -0.006 | -0.008 | 0.001 |
| | 4040 | 0.004 | -0.933 | 1.376 | -0.012 | 0.009 | 0.021 | 0.019 | 0.016 |
| Wall EL4.65m to EL9.06m | 6081 | 0.289 | -0.800 | -0.370 | 0.016 | 0.064 | 0.014 | 0.008 | 0.006 |
| | 4066 | 0.005 | -0.045 | 1.307 | 0.000 | -0.001 | 0.006 | 0.001 | -0.001 |
| | 4070 | 0.047 | -0.307 | 1.041 | 0.019 | -0.009 | 0.008 | -0.007 | -0.014 |
| Wall EL9.06m to EL13.8m | 6117 | 0.652 | -0.430 | -0.426 | 0.005 | 0.001 | 0.000 | 0.002 | -0.011 |
| | 4096 | -0.005 | -0.023 | 0.678 | 0.001 | 0.001 | 0.001 | 0.000 | 0.000 |
| | 4100 | 0.003 | -0.173 | 0.559 | 0.012 | -0.003 | 0.005 | -0.001 | -0.014 |

*SI to U.S. Customary units conversion (SI units are the controlling units and U.S. Customary units are for reference only):*
*1 MN/m = $6.852 \times 10^4$ lbf/ft*
*1 MNm/m = $2.248 \times 10^5$ lbf-ft/ft*

## Table 3G.2-11 Results of NASTRAN Analysis: Seismic Load (Vertical: Upward Direction)

| Location | Element ID | Nx (MN/m) | Ny (MN/m) | Nxy (MN/m) | Mx (MNm/m) | My (MNm/m) | Mxy (MNm/m) | Qx (MN/m) | Qy (MN/m) |
|---|---|---|---|---|---|---|---|---|---|
| Basemat EL-7.4m | 67 | -0.025 | 0.587 | -0.021 | 1.029 | 0.870 | -0.083 | -0.109 | 0.123 |
| | 72 | 0.038 | -0.081 | -0.011 | 0.395 | 0.125 | 0.038 | 0.492 | -0.028 |
| | 115 | 0.617 | 0.235 | -0.259 | 0.218 | 0.194 | 0.298 | 0.027 | 0.579 |
| | 120 | 0.048 | 0.025 | 0.126 | 0.091 | 0.157 | -0.539 | 0.038 | 0.038 |
| Slab B1F EL-2.0m | 567 | -0.002 | -0.605 | 0.036 | 0.044 | 0.017 | 0.006 | 0.057 | -0.016 |
| | 572 | -0.066 | -0.103 | 0.010 | 0.020 | 0.012 | -0.005 | -0.073 | 0.004 |
| | 615 | -0.148 | -0.114 | 0.212 | 0.025 | 0.003 | -0.019 | 0.031 | 0.002 |
| | 620 | -0.037 | -0.037 | -0.051 | 0.017 | 0.017 | 0.020 | -0.023 | -0.026 |
| Slab 1F EL4.65m | 1067 | -0.076 | -0.042 | 0.003 | -0.151 | -0.056 | 0.010 | -0.027 | -0.022 |
| | 1072 | 0.002 | -0.039 | -0.001 | 0.036 | 0.009 | 0.000 | -0.072 | -0.004 |
| | 1115 | -0.111 | -0.031 | -0.012 | 0.016 | 0.145 | 0.008 | 0.001 | -0.134 |
| | 1120 | -0.021 | -0.017 | -0.052 | 0.016 | 0.015 | 0.014 | -0.017 | -0.022 |
| Slab 2F EL9.06m | 1567 | -0.038 | -0.072 | 0.003 | -0.092 | -0.007 | 0.005 | -0.018 | -0.011 |
| | 1572 | -0.025 | -0.009 | 0.001 | 0.044 | 0.014 | 0.001 | -0.078 | 0.000 |
| | 1615 | -0.142 | -0.125 | 0.018 | 0.010 | 0.141 | 0.007 | -0.007 | -0.148 |
| | 1620 | -0.020 | -0.016 | -0.006 | 0.019 | 0.018 | 0.016 | -0.020 | -0.025 |
| Roof EL13.8m | 1867 | 0.112 | 0.089 | -0.003 | -0.231 | -0.074 | 0.011 | -0.034 | -0.006 |
| | 1872 | 0.045 | 0.111 | -0.005 | 0.040 | 0.024 | -0.008 | -0.086 | -0.001 |
| | 1915 | 0.120 | 0.149 | 0.002 | 0.007 | 0.180 | 0.012 | 0.006 | -0.205 |
| | 1920 | 0.024 | 0.053 | -0.016 | 0.026 | 0.022 | 0.056 | -0.024 | -0.030 |
| Wall EL-7.4m to EL-2.0m | 6007 | 0.216 | 0.666 | 0.192 | 0.011 | -0.080 | 0.004 | 0.049 | -0.060 |
| | 4006 | -0.014 | 0.760 | -0.017 | 0.027 | 0.146 | -0.001 | 0.002 | 0.036 |
| | 4010 | -0.057 | 0.200 | 0.094 | -0.012 | 0.060 | 0.005 | 0.027 | 0.035 |
| Wall EL-2.0m to EL4.65m | 6043 | -0.145 | 1.165 | 0.250 | -0.034 | -0.023 | -0.006 | -0.036 | -0.001 |
| | 4036 | -0.053 | 0.576 | 0.002 | -0.017 | -0.090 | 0.001 | 0.002 | -0.030 |
| | 4040 | 0.016 | 0.354 | -0.041 | 0.004 | -0.021 | -0.010 | -0.015 | -0.016 |
| Wall EL4.65m to EL9.06m | 6081 | -0.002 | 0.648 | -0.005 | 0.018 | 0.112 | 0.004 | 0.001 | 0.063 |
| | 4066 | 0.007 | 0.371 | -0.006 | -0.006 | -0.033 | 0.002 | 0.003 | -0.024 |
| | 4070 | 0.016 | 0.271 | -0.087 | 0.002 | -0.008 | -0.001 | -0.006 | -0.008 |
| Wall EL9.06m to EL13.8m | 6117 | 0.016 | 0.398 | 0.040 | 0.012 | 0.080 | -0.005 | -0.005 | 0.113 |
| | 4096 | 0.062 | 0.204 | 0.000 | -0.008 | -0.043 | 0.000 | 0.003 | -0.055 |
| | 4100 | 0.002 | 0.116 | -0.082 | -0.005 | -0.011 | 0.003 | 0.003 | -0.014 |

*SI to U.S. Customary units conversion (SI units are the controlling units and U.S. Customary units are for reference only):*
*1 MN/m = $6.852 \times 10^4$ lbf/ft*
*1 MNm/m = $2.248 \times 10^5$ lbf-ft/ft*

## Table 3G.2-12 Combined Forces and Moments: Selected Load Combination CB-3

| Location | Element ID | | Nx (MN/m) | Ny (MN/m) | Nxy (MN/m) | Mx (MNm/m) | My (MNm/m) | Mxy (MNm/m) | Qx (MN/m) | Qy (MN/m) |
|---|---|---|---|---|---|---|---|---|---|---|
| Basemat EL-7.4m | 67 | OTHR | -3.076 | -3.299 | -0.064 | -1.214 | -0.445 | 0.171 | -0.029 | -0.209 |
| | | TEMP | 0.000 | 0.000 | 0.000 | 0.000 | 0.000 | 0.000 | 0.000 | 0.000 |
| | 72 | OTHR | -3.988 | -0.998 | -0.061 | 3.228 | 1.110 | -0.064 | -0.756 | -0.033 |
| | | TEMP | 0.000 | 0.000 | 0.000 | 0.000 | 0.000 | 0.000 | 0.000 | 0.000 |
| | 115 | OTHR | -3.867 | -2.269 | -0.933 | -0.231 | 0.426 | 0.867 | -0.626 | -0.886 |
| | | TEMP | 0.000 | 0.000 | 0.000 | 0.000 | 0.000 | 0.000 | 0.000 | 0.000 |
| | 120 | OTHR | -3.044 | -1.664 | -0.173 | 1.430 | 0.607 | -0.028 | -0.555 | -0.039 |
| | | TEMP | 0.000 | 0.000 | 0.000 | 0.000 | 0.000 | 0.000 | 0.000 | 0.000 |
| Slab B1F EL-2.0m | 567 | OTHR | -1.677 | -0.332 | 0.009 | -0.116 | -0.035 | -0.006 | -0.138 | 0.041 |
| | | TEMP | 0.000 | 0.000 | 0.000 | 0.000 | 0.000 | 0.000 | 0.000 | 0.000 |
| | 572 | OTHR | -2.586 | -1.024 | 0.182 | -0.014 | -0.020 | 0.013 | 0.156 | -0.010 |
| | | TEMP | 0.000 | 0.000 | 0.000 | 0.000 | 0.000 | 0.000 | 0.000 | 0.000 |
| | 615 | OTHR | -0.867 | -0.783 | 0.118 | -0.069 | -0.014 | 0.032 | -0.078 | 0.010 |
| | | TEMP | 0.000 | 0.000 | 0.000 | 0.000 | 0.000 | 0.000 | 0.000 | 0.000 |
| | 620 | OTHR | -1.208 | -0.600 | 1.568 | -0.031 | -0.054 | -0.048 | 0.041 | 0.077 |
| | | TEMP | 0.000 | 0.000 | 0.000 | 0.000 | 0.000 | 0.000 | 0.000 | 0.000 |
| Slab 1F EL4.65m | 1067 | OTHR | -0.567 | -0.133 | -0.024 | 0.271 | 0.103 | -0.017 | 0.045 | 0.035 |
| | | TEMP | 0.000 | 0.000 | 0.000 | 0.000 | 0.000 | 0.000 | 0.000 | 0.000 |
| | 1072 | OTHR | -1.227 | -0.485 | 0.096 | -0.190 | -0.034 | -0.004 | 0.189 | 0.007 |
| | | TEMP | 0.000 | 0.000 | 0.000 | 0.000 | 0.000 | 0.000 | 0.000 | 0.000 |
| | 1115 | OTHR | -0.354 | -0.296 | 0.327 | -0.034 | -0.298 | -0.010 | 0.001 | 0.261 |
| | | TEMP | 0.000 | 0.000 | 0.000 | 0.000 | 0.000 | 0.000 | 0.000 | 0.000 |
| | 1120 | OTHR | -0.445 | -0.114 | 0.614 | -0.059 | -0.029 | -0.010 | 0.054 | 0.031 |
| | | TEMP | 0.000 | 0.000 | 0.000 | 0.000 | 0.000 | 0.000 | 0.000 | 0.000 |
| Slab 2F EL9.06m | 1567 | OTHR | 0.017 | 0.092 | -0.028 | 0.140 | 0.010 | -0.006 | 0.026 | 0.016 |
| | | TEMP | 0.000 | 0.000 | 0.000 | 0.000 | 0.000 | 0.000 | 0.000 | 0.000 |
| | 1572 | OTHR | 0.140 | -0.070 | -0.022 | -0.085 | -0.023 | -0.002 | 0.134 | 0.000 |
| | | TEMP | 0.000 | 0.000 | 0.000 | 0.000 | 0.000 | 0.000 | 0.000 | 0.000 |
| | 1615 | OTHR | 0.022 | 0.199 | -0.056 | -0.016 | -0.208 | -0.010 | 0.011 | 0.224 |
| | | TEMP | 0.000 | 0.000 | 0.000 | 0.000 | 0.000 | 0.000 | 0.000 | 0.000 |
| | 1620 | OTHR | 0.054 | 0.027 | -0.135 | -0.030 | -0.028 | -0.027 | 0.030 | 0.037 |
| | | TEMP | 0.000 | 0.000 | 0.000 | 0.000 | 0.000 | 0.000 | 0.000 | 0.000 |
| Roof EL13.8m | 1867 | OTHR | -0.111 | -0.087 | -0.006 | 0.220 | 0.103 | -0.009 | 0.024 | 0.006 |
| | | TEMP | 0.000 | 0.000 | 0.000 | 0.000 | 0.000 | 0.000 | 0.000 | 0.000 |
| | 1872 | OTHR | -0.062 | -0.136 | -0.009 | -0.084 | -0.020 | 0.003 | 0.120 | -0.002 |
| | | TEMP | 0.000 | 0.000 | 0.000 | 0.000 | 0.000 | 0.000 | 0.000 | 0.000 |
| | 1915 | OTHR | -0.110 | -0.168 | -0.028 | -0.014 | -0.205 | -0.005 | -0.004 | 0.207 |
| | | TEMP | 0.000 | 0.000 | 0.000 | 0.000 | 0.000 | 0.000 | 0.000 | 0.000 |
| | 1920 | OTHR | -0.010 | -0.059 | 0.038 | -0.028 | -0.028 | -0.062 | 0.019 | 0.026 |
| | | TEMP | 0.000 | 0.000 | 0.000 | 0.000 | 0.000 | 0.000 | 0.000 | 0.000 |

*OTHR: Loads other than thermal and seismic loads*
*TEMP: Thermal loads*
*SI to U.S. Customary units conversion (SI units are the controlling units and U.S. Customary units are for reference only):*
*1 MN/m = $6.852 \times 10^4$ lbf/ft*
*1 MNm/m = $2.248 \times 10^5$ lbf-ft/ft*

## Table 3G.2-12 Combined Forces and Moments: Selected Load Combination CB-3 (Continued)

| Location | Element ID | | Nx (MN/m) | Ny (MN/m) | Nxy (MN/m) | Mx (MNm/m) | My (MNm/m) | Mxy (MNm/m) | Qx (MN/m) | Qy (MN/m) |
|---|---|---|---|---|---|---|---|---|---|---|
| Wall EL-7.4m to EL-2.0m | 6007 | OTHR | -1.370 | -1.029 | -1.442 | 0.093 | 0.134 | 0.050 | 0.104 | 0.321 |
| | | TEMP | 0.000 | 0.000 | 0.000 | 0.000 | 0.000 | 0.000 | 0.000 | 0.000 |
| | 4006 | OTHR | -0.630 | -0.851 | -0.047 | -0.103 | -0.605 | 0.002 | -0.007 | -1.197 |
| | | TEMP | 0.000 | 0.000 | 0.000 | 0.000 | 0.000 | 0.000 | 0.000 | 0.000 |
| | 4010 | OTHR | -0.498 | -0.704 | -0.037 | -0.112 | -0.242 | 0.133 | 0.136 | -0.504 |
| | | TEMP | 0.000 | 0.000 | 0.000 | 0.000 | 0.000 | 0.000 | 0.000 | 0.000 |
| Wall EL-2.0m to EL4.65m | 6043 | OTHR | -0.954 | -1.472 | -0.807 | 0.061 | 0.054 | -0.019 | 0.064 | 0.359 |
| | | TEMP | 0.000 | 0.000 | 0.000 | 0.000 | 0.000 | 0.000 | 0.000 | 0.000 |
| | 4036 | OTHR | -1.175 | -0.429 | 0.058 | 0.043 | 0.103 | -0.007 | 0.037 | -0.967 |
| | | TEMP | 0.000 | 0.000 | 0.000 | 0.000 | 0.000 | 0.000 | 0.000 | 0.000 |
| | 4040 | OTHR | -0.680 | -1.387 | 0.649 | -0.180 | -0.008 | 0.168 | 0.356 | -0.283 |
| | | TEMP | 0.000 | 0.000 | 0.000 | 0.000 | 0.000 | 0.000 | 0.000 | 0.000 |
| Wall EL4.65m to EL9.06m | 6081 | OTHR | -0.538 | -0.813 | 0.197 | 0.005 | 0.007 | 0.001 | -0.001 | -0.057 |
| | | TEMP | 0.000 | 0.000 | 0.000 | 0.000 | 0.000 | 0.000 | 0.000 | 0.000 |
| | 4066 | OTHR | -0.674 | -0.365 | 0.092 | -0.073 | -0.509 | -0.013 | 0.015 | -0.096 |
| | | TEMP | 0.000 | 0.000 | 0.000 | 0.000 | 0.000 | 0.000 | 0.000 | 0.000 |
| | 4070 | OTHR | -0.153 | -0.624 | 0.418 | -0.041 | -0.153 | -0.125 | 0.005 | -0.081 |
| | | TEMP | 0.000 | 0.000 | 0.000 | 0.000 | 0.000 | 0.000 | 0.000 | 0.000 |
| Wall EL9.06m to EL13.8m | 6117 | OTHR | -0.097 | -0.482 | 0.023 | -0.020 | -0.128 | 0.004 | 0.007 | -0.141 |
| | | TEMP | 0.000 | 0.000 | 0.000 | 0.000 | 0.000 | 0.000 | 0.000 | 0.000 |
| | 4096 | OTHR | -0.220 | -0.261 | 0.031 | 0.009 | 0.057 | -0.002 | -0.009 | 0.082 |
| | | TEMP | 0.000 | 0.000 | 0.000 | 0.000 | 0.000 | 0.000 | 0.000 | 0.000 |
| | 4100 | OTHR | 0.000 | -0.080 | 0.083 | 0.008 | 0.006 | -0.001 | -0.011 | 0.011 |
| | | TEMP | 0.000 | 0.000 | 0.000 | 0.000 | 0.000 | 0.000 | 0.000 | 0.000 |

*OTHR: Loads other than thermal and seismic loads*
*TEMP: Thermal loads*
*SI to U.S. Customary units conversion (SI units are the controlling units and U.S. Customary units are for reference only):*
*1 MN/m = $6.852 \times 10^4$ lbf/ft*
*1 MNm/m = $2.248 \times 10^5$ lbf-ft/ft*

## Table 3G.2-13 Combined Forces and Moments: Selected Load Combination CB-4

| Location | Element ID | | Nx (MN/m) | Ny (MN/m) | Nxy (MN/m) | Mx (MNm/m) | My (MNm/m) | Mxy (MNm/m) | Qx (MN/m) | Qy (MN/m) |
|---|---|---|---|---|---|---|---|---|---|---|
| Basemat EL-7.4m | 67 | OTHR | -2.353 | -2.508 | -0.049 | -0.908 | -0.318 | 0.129 | -0.026 | -0.156 |
| | | TEMP | 0.245 | 0.128 | 0.024 | 1.598 | 1.437 | -0.003 | -0.013 | 0.008 |
| | 72 | OTHR | -3.049 | -0.765 | -0.047 | 2.478 | 0.853 | -0.048 | -0.565 | -0.026 |
| | | TEMP | 0.067 | 0.300 | 0.066 | 0.289 | 1.406 | -0.040 | 0.110 | 0.095 |
| | 115 | OTHR | -2.942 | -1.729 | -0.720 | -0.172 | 0.330 | 0.671 | -0.478 | -0.664 |
| | | TEMP | 1.046 | 0.058 | 0.132 | 1.780 | 0.464 | -0.083 | 0.263 | 0.175 |
| | 120 | OTHR | -2.327 | -1.272 | -0.129 | 1.096 | 0.468 | -0.035 | -0.424 | -0.029 |
| | | TEMP | -0.179 | -0.321 | 0.371 | 0.667 | 0.679 | -0.063 | 0.490 | 0.334 |
| Slab B1F EL-2.0m | 567 | OTHR | -1.282 | -0.269 | 0.008 | -0.087 | -0.027 | -0.004 | -0.104 | 0.031 |
| | | TEMP | -0.230 | 0.032 | 0.005 | -0.007 | -0.004 | 0.000 | -0.004 | 0.002 |
| | 572 | OTHR | -1.980 | -0.786 | 0.139 | -0.010 | -0.015 | 0.009 | 0.117 | -0.008 |
| | | TEMP | 0.093 | -0.254 | -0.026 | -0.017 | 0.001 | 0.000 | 0.007 | 0.000 |
| | 615 | OTHR | -0.666 | -0.601 | 0.095 | -0.052 | -0.010 | 0.024 | -0.059 | 0.007 |
| | | TEMP | -0.428 | 0.121 | -0.119 | -0.001 | 0.000 | 0.001 | -0.007 | -0.012 |
| | 620 | OTHR | -0.924 | -0.460 | 1.198 | -0.023 | -0.041 | -0.036 | 0.031 | 0.058 |
| | | TEMP | -0.347 | -0.334 | -0.506 | -0.010 | -0.007 | 0.006 | 0.006 | 0.001 |
| Slab 1F EL4.65m | 1067 | OTHR | -0.435 | -0.102 | -0.018 | 0.204 | 0.077 | -0.013 | 0.034 | 0.026 |
| | | TEMP | -1.179 | -0.492 | -0.005 | 0.003 | -0.015 | 0.000 | 0.002 | -0.001 |
| | 1072 | OTHR | -0.938 | -0.372 | 0.073 | -0.145 | -0.026 | -0.003 | 0.143 | 0.005 |
| | | TEMP | -0.153 | -1.626 | -0.081 | 0.100 | 0.016 | 0.005 | -0.045 | -0.002 |
| | 1115 | OTHR | -0.273 | -0.226 | 0.250 | -0.026 | -0.225 | -0.008 | 0.001 | 0.197 |
| | | TEMP | -1.366 | 0.033 | -0.042 | -0.004 | 0.028 | 0.003 | -0.010 | -0.005 |
| | 1120 | OTHR | -0.340 | -0.087 | 0.468 | -0.045 | -0.022 | -0.008 | 0.041 | 0.023 |
| | | TEMP | -1.745 | -1.712 | -2.181 | 0.088 | 0.086 | -0.008 | -0.041 | -0.038 |
| Slab 2F EL9.06m | 1567 | OTHR | 0.013 | 0.069 | -0.021 | 0.105 | 0.008 | -0.005 | 0.019 | 0.012 |
| | | TEMP | -2.057 | -0.795 | 0.007 | -0.039 | -0.083 | 0.001 | 0.003 | 0.000 |
| | 1572 | OTHR | 0.107 | -0.054 | -0.017 | -0.064 | -0.017 | -0.002 | 0.101 | 0.000 |
| | | TEMP | -0.490 | -2.745 | -0.073 | 0.027 | -0.039 | 0.005 | -0.070 | 0.005 |
| | 1615 | OTHR | 0.014 | 0.150 | -0.042 | -0.012 | -0.157 | -0.008 | 0.008 | 0.169 |
| | | TEMP | -1.573 | 0.168 | -0.018 | 0.019 | 0.137 | -0.025 | 0.031 | -0.069 |
| | 1620 | OTHR | 0.041 | 0.021 | -0.104 | -0.023 | -0.021 | -0.020 | 0.023 | 0.028 |
| | | TEMP | -2.781 | -2.761 | -3.520 | -0.067 | -0.073 | 0.022 | 0.020 | 0.029 |
| Roof EL13.8m | 1867 | OTHR | -0.084 | -0.065 | -0.005 | 0.165 | 0.078 | -0.006 | 0.018 | 0.004 |
| | | TEMP | 1.083 | 0.974 | -0.007 | -0.620 | -0.784 | 0.001 | 0.011 | -0.004 |
| | 1872 | OTHR | -0.047 | -0.102 | -0.007 | -0.064 | -0.015 | 0.002 | 0.090 | -0.001 |
| | | TEMP | 1.288 | 0.870 | 0.299 | -0.226 | -0.592 | 0.022 | -0.235 | 0.017 |
| | 1915 | OTHR | -0.083 | -0.126 | -0.021 | -0.010 | -0.154 | -0.004 | -0.003 | 0.156 |
| | | TEMP | 1.560 | 0.814 | 0.362 | -0.557 | -0.354 | 0.007 | 0.014 | -0.103 |
| | 1920 | OTHR | -0.007 | -0.045 | 0.029 | -0.021 | -0.021 | -0.047 | 0.014 | 0.020 |
| | | TEMP | -0.018 | -0.182 | 0.316 | -0.520 | -0.530 | -0.022 | -0.009 | 0.007 |

## Table 3G.2-13 Combined Forces and Moments: Selected Load Combination CB-4 (Continued)

| Location | Element ID | | Nx (MN/m) | Ny (MN/m) | Nxy (MN/m) | Mx (MNm/m) | My (MNm/m) | Mxy (MNm/m) | Qx (MN/m) | Qy (MN/m) |
|---|---|---|---|---|---|---|---|---|---|---|
| Wall EL-7.4m to EL-2.0m | 6007 | OTHR | -1.042 | -0.772 | -1.098 | 0.071 | 0.100 | 0.038 | 0.081 | 0.244 |
| | | TEMP | 0.343 | 0.087 | 0.124 | 0.139 | 0.187 | 0.000 | -0.006 | 0.045 |
| | 4006 | OTHR | -0.482 | -0.632 | -0.036 | -0.078 | -0.459 | 0.001 | -0.005 | -0.914 |
| | | TEMP | 0.359 | -0.212 | 0.108 | -0.134 | -0.142 | 0.000 | -0.001 | -0.023 |
| | 4010 | OTHR | -0.382 | -0.534 | -0.026 | -0.086 | -0.183 | 0.102 | 0.105 | -0.384 |
| | | TEMP | 0.173 | 0.673 | 0.175 | -0.115 | -0.131 | -0.010 | -0.005 | -0.031 |
| Wall EL-2.0m to EL4.65m | 6043 | OTHR | -0.733 | -1.099 | -0.611 | 0.046 | 0.040 | -0.015 | 0.048 | 0.275 |
| | | TEMP | -0.258 | -0.852 | -0.163 | 0.134 | 0.145 | -0.008 | 0.011 | -0.063 |
| | 4036 | OTHR | -0.900 | -0.315 | 0.045 | 0.033 | 0.076 | -0.005 | 0.028 | -0.740 |
| | | TEMP | 0.077 | -0.838 | 0.043 | -0.138 | -0.138 | 0.000 | 0.002 | 0.114 |
| | 4040 | OTHR | -0.519 | -1.053 | 0.496 | -0.137 | -0.007 | 0.128 | 0.272 | -0.217 |
| | | TEMP | 0.340 | 2.135 | 0.158 | -0.047 | -0.159 | -0.042 | -0.097 | -0.035 |
| Wall EL4.65m to EL9.06m | 6081 | OTHR | -0.412 | -0.610 | 0.151 | 0.004 | 0.008 | 0.001 | -0.001 | -0.042 |
| | | TEMP | 6.548 | -1.010 | 0.131 | 1.243 | 0.955 | 0.018 | -0.056 | -0.077 |
| | 4066 | OTHR | -0.515 | -0.272 | 0.070 | -0.056 | -0.389 | -0.010 | 0.011 | -0.074 |
| | | TEMP | 7.531 | -0.836 | -0.102 | -1.322 | -0.952 | -0.001 | 0.000 | 0.110 |
| | 4070 | OTHR | -0.116 | -0.471 | 0.317 | -0.031 | -0.117 | -0.096 | 0.004 | -0.062 |
| | | TEMP | 4.742 | 1.668 | -2.190 | -1.087 | -0.988 | -0.027 | -0.303 | -0.234 |
| Wall EL9.06m to EL13.8m | 6117 | OTHR | -0.074 | -0.362 | 0.019 | -0.015 | -0.097 | 0.003 | 0.005 | -0.106 |
| | | TEMP | 3.689 | -0.604 | -1.506 | 0.729 | 1.178 | -0.018 | -0.029 | 0.288 |
| | 4096 | OTHR | -0.167 | -0.196 | 0.024 | 0.007 | 0.043 | -0.002 | -0.007 | 0.062 |
| | | TEMP | 4.099 | -0.340 | -0.173 | -0.751 | -1.226 | 0.000 | 0.023 | -0.344 |
| | 4100 | OTHR | 0.000 | -0.059 | 0.062 | 0.006 | 0.005 | -0.001 | -0.008 | 0.008 |
| | | TEMP | 2.630 | 1.287 | -1.234 | -0.554 | -0.993 | -0.004 | -0.282 | -0.506 |

*OTHR: Loads other than thermal and seismic loads*
*TEMP: Thermal loads*
*SI to U.S. Customary units conversion (SI units are the controlling units and U.S. Customary units are for reference only):*
*1 MN/m = $6.852 \times 10^4$ lbf/ft*
*1 MNm/m = $2.248 \times 10^5$ lbf-ft/ft*

## Table 3G.2-14 Combined Forces and Moments: Selected Load Combination CB-7

| Location | Element ID | | Nx (MN/m) | Ny (MN/m) | Nxy (MN/m) | Mx (MNm/m) | My (MNm/m) | Mxy (MNm/m) | Qx (MN/m) | Qy (MN/m) |
|---|---|---|---|---|---|---|---|---|---|---|
| Basemat EL-7.4m | 67 | OTHR | -1.808 | -2.051 | -0.030 | -0.844 | -0.436 | 0.109 | 0.033 | -0.149 |
| | | TEMP | 0.189 | 0.099 | 0.018 | 1.230 | 1.105 | -0.002 | -0.010 | 0.006 |
| | 72 | OTHR | -2.357 | -0.633 | -0.035 | 1.804 | 0.589 | -0.038 | -0.565 | -0.014 |
| | | TEMP | 0.052 | 0.231 | 0.051 | 0.223 | 1.082 | -0.031 | 0.085 | 0.073 |
| | 115 | OTHR | -2.387 | -1.376 | -0.471 | -0.164 | 0.221 | 0.417 | -0.356 | -0.619 |
| | | TEMP | 0.804 | 0.045 | 0.101 | 1.369 | 0.357 | -0.064 | 0.202 | 0.135 |
| | 120 | OTHR | -1.798 | -0.994 | -0.125 | 0.815 | 0.329 | 0.097 | -0.328 | -0.035 |
| | | TEMP | -0.138 | -0.247 | 0.285 | 0.513 | 0.522 | -0.049 | 0.377 | 0.257 |
| Slab B1F EL-2.0m | 567 | OTHR | -0.986 | -0.084 | -0.001 | -0.074 | -0.025 | -0.005 | -0.094 | 0.028 |
| | | TEMP | -0.177 | 0.025 | 0.004 | -0.005 | -0.003 | 0.000 | -0.003 | 0.002 |
| | 572 | OTHR | -1.509 | -0.582 | 0.106 | -0.011 | -0.015 | 0.009 | 0.109 | -0.007 |
| | | TEMP | 0.071 | -0.195 | -0.020 | -0.013 | 0.001 | 0.000 | 0.005 | 0.000 |
| | 615 | OTHR | -0.485 | -0.442 | 0.032 | -0.046 | -0.010 | 0.024 | -0.053 | 0.007 |
| | | TEMP | -0.329 | 0.093 | -0.091 | -0.001 | 0.000 | 0.001 | -0.005 | -0.009 |
| | 620 | OTHR | -0.704 | -0.346 | 0.932 | -0.022 | -0.036 | -0.033 | 0.031 | 0.052 |
| | | TEMP | -0.267 | -0.257 | -0.389 | -0.008 | -0.005 | 0.004 | 0.005 | 0.001 |
| Slab 1F EL4.65m | 1067 | OTHR | -0.325 | -0.066 | -0.014 | 0.189 | 0.070 | -0.012 | 0.032 | 0.025 |
| | | TEMP | -0.907 | -0.378 | -0.004 | 0.003 | -0.012 | 0.000 | 0.002 | -0.001 |
| | 1072 | OTHR | -0.720 | -0.271 | 0.055 | -0.115 | -0.022 | -0.002 | 0.123 | 0.005 |
| | | TEMP | -0.118 | -1.251 | -0.062 | 0.077 | 0.013 | 0.004 | -0.035 | -0.001 |
| | 1115 | OTHR | -0.193 | -0.164 | 0.188 | -0.023 | -0.202 | -0.008 | 0.001 | 0.179 |
| | | TEMP | -1.051 | 0.025 | -0.032 | -0.003 | 0.021 | 0.002 | -0.008 | -0.004 |
| | 1120 | OTHR | -0.256 | -0.060 | 0.361 | -0.038 | -0.019 | -0.008 | 0.035 | 0.023 |
| | | TEMP | -1.342 | -1.317 | -1.678 | 0.068 | 0.066 | -0.006 | -0.032 | -0.030 |
| Slab 2F EL9.06m | 1567 | OTHR | -0.001 | 0.069 | -0.016 | 0.097 | 0.005 | -0.004 | 0.018 | 0.011 |
| | | TEMP | -1.582 | -0.611 | 0.005 | -0.030 | -0.064 | 0.001 | 0.002 | 0.000 |
| | 1572 | OTHR | 0.092 | -0.030 | -0.015 | -0.051 | -0.016 | -0.001 | 0.086 | 0.000 |
| | | TEMP | -0.377 | -2.111 | -0.056 | 0.021 | -0.030 | 0.004 | -0.054 | 0.003 |
| | 1615 | OTHR | 0.020 | 0.138 | -0.044 | -0.011 | -0.139 | -0.008 | 0.007 | 0.153 |
| | | TEMP | -1.210 | 0.130 | -0.014 | 0.015 | 0.105 | -0.019 | 0.024 | -0.053 |
| | 1620 | OTHR | 0.037 | 0.025 | -0.088 | -0.020 | -0.019 | -0.018 | 0.021 | 0.025 |
| | | TEMP | -2.139 | -2.124 | -2.708 | -0.051 | -0.056 | 0.017 | 0.015 | 0.022 |
| Roof EL13.8m | 1867 | OTHR | -0.071 | -0.041 | -0.003 | 0.120 | 0.060 | -0.005 | 0.013 | 0.003 |
| | | TEMP | 0.833 | 0.750 | -0.005 | -0.477 | -0.603 | 0.001 | 0.008 | -0.003 |
| | 1872 | OTHR | -0.032 | -0.070 | -0.004 | -0.050 | -0.010 | 0.001 | 0.070 | -0.001 |
| | | TEMP | 0.990 | 0.669 | 0.230 | -0.174 | -0.455 | 0.017 | -0.181 | 0.013 |
| | 1915 | OTHR | -0.063 | -0.094 | -0.024 | -0.008 | -0.117 | -0.002 | -0.002 | 0.115 |
| | | TEMP | 1.200 | 0.626 | 0.278 | -0.429 | -0.272 | 0.005 | 0.011 | -0.079 |
| | 1920 | OTHR | -0.002 | -0.030 | 0.022 | -0.015 | -0.016 | -0.036 | 0.011 | 0.015 |
| | | TEMP | -0.014 | -0.140 | 0.243 | -0.400 | -0.408 | -0.017 | -0.007 | 0.005 |

## Table 3G.2-14 Combined Forces and Moments: Selected Load Combination CB-7 (Continued)

| Location | Element ID | | Nx (MN/m) | Ny (MN/m) | Nxy (MN/m) | Mx (MNm/m) | My (MNm/m) | Mxy (MNm/m) | Qx (MN/m) | Qy (MN/m) |
|---|---|---|---|---|---|---|---|---|---|---|
| Wall EL-7.4m to EL-2.0m | 6007 | OTHR | -0.845 | -0.717 | -0.846 | 0.051 | 0.094 | 0.028 | 0.051 | 0.200 |
| | | TEMP | 0.264 | 0.067 | 0.095 | 0.107 | 0.144 | 0.000 | -0.005 | 0.034 |
| | 4006 | OTHR | -0.378 | -0.673 | -0.027 | -0.067 | -0.387 | 0.001 | -0.004 | -0.711 |
| | | TEMP | 0.276 | -0.163 | 0.083 | -0.103 | -0.109 | 0.000 | -0.001 | -0.018 |
| | 4010 | OTHR | -0.285 | -0.453 | -0.052 | -0.062 | -0.153 | 0.077 | 0.075 | -0.303 |
| | | TEMP | 0.133 | 0.518 | 0.135 | -0.088 | -0.101 | -0.007 | -0.004 | -0.024 |
| Wall EL-2.0m to EL4.65m | 6043 | OTHR | -0.536 | -1.046 | -0.483 | 0.042 | 0.034 | -0.010 | 0.044 | 0.212 |
| | | TEMP | -0.199 | -0.655 | -0.125 | 0.103 | 0.111 | -0.006 | 0.009 | -0.048 |
| | 4036 | OTHR | -0.677 | -0.360 | 0.032 | 0.029 | 0.080 | -0.004 | 0.021 | -0.563 |
| | | TEMP | 0.059 | -0.645 | 0.033 | -0.106 | -0.106 | 0.000 | 0.001 | 0.088 |
| | 4040 | OTHR | -0.403 | -0.877 | 0.373 | -0.107 | 0.000 | 0.101 | 0.212 | -0.163 |
| | | TEMP | 0.262 | 1.642 | 0.122 | -0.036 | -0.123 | -0.033 | -0.075 | -0.027 |
| Wall EL4.65m to EL9.06m | 6081 | OTHR | -0.305 | -0.544 | 0.126 | 0.001 | -0.013 | 0.000 | 0.000 | -0.052 |
| | | TEMP | 5.037 | -0.777 | 0.101 | 0.957 | 0.735 | 0.014 | -0.043 | -0.060 |
| | 4066 | OTHR | -0.381 | -0.262 | 0.053 | -0.043 | -0.298 | -0.008 | 0.008 | -0.050 |
| | | TEMP | 5.793 | -0.643 | -0.079 | -1.017 | -0.732 | -0.001 | 0.000 | 0.085 |
| | 4070 | OTHR | -0.085 | -0.401 | 0.246 | -0.023 | -0.089 | -0.074 | 0.002 | -0.045 |
| | | TEMP | 3.647 | 1.283 | -1.685 | -0.836 | -0.760 | -0.021 | -0.233 | -0.180 |
| Wall EL9.06m to EL13.8m | 6117 | OTHR | -0.058 | -0.297 | 0.011 | -0.013 | -0.083 | 0.002 | 0.005 | -0.089 |
| | | TEMP | 2.838 | -0.465 | -1.159 | 0.560 | 0.906 | -0.014 | -0.022 | 0.222 |
| | 4096 | OTHR | -0.118 | -0.166 | 0.017 | 0.006 | 0.037 | -0.001 | -0.005 | 0.053 |
| | | TEMP | 3.153 | -0.262 | -0.133 | -0.578 | -0.943 | 0.000 | 0.018 | -0.265 |
| | 4100 | OTHR | 0.005 | -0.056 | 0.047 | 0.005 | 0.005 | 0.000 | -0.007 | 0.008 |
| | | TEMP | 2.023 | 0.990 | -0.949 | -0.426 | -0.764 | -0.003 | -0.217 | -0.390 |

*OTHR: Loads other than thermal and seismic loads*
*TEMP: Thermal loads*
*SI to U.S. Customary units conversion (SI units are the controlling units and U.S. Customary units are for reference only):*
*1 MN/m = $6.852 \times 10^4$ lbf/ft*
*1 MNm/m = $2.248 \times 10^5$ lbf-ft/ft*

## Table 3G.2-15 Combined Forces and Moments: Selected Load Combination CB-9

| Location | Element ID | | Nx (MN/m) | Ny (MN/m) | Nxy (MN/m) | Mx (MNm/m) | My (MNm/m) | Mxy (MNm/m) | Qx (MN/m) | Qy (MN/m) |
|---|---|---|---|---|---|---|---|---|---|---|
| Basemat EL-7.4m | 67 | OTHR | -1.803 | -2.073 | -0.034 | -0.908 | -0.459 | 0.120 | 0.010 | -0.152 |
| | | TEMP | -0.409 | -1.291 | 0.169 | 6.783 | 6.419 | -0.132 | 0.291 | -0.113 |
| | | SEIS | 0.216 | 0.667 | 0.611 | 1.621 | 2.914 | 0.310 | 1.266 | 2.739 |
| | 72 | OTHR | -2.353 | -0.545 | -0.033 | 1.822 | 0.627 | -0.044 | -0.549 | -0.012 |
| | | TEMP | -0.189 | -0.279 | 0.059 | 1.916 | 5.868 | -0.007 | 0.290 | 0.127 |
| | | SEIS | 0.188 | 3.720 | 2.076 | 2.945 | 1.836 | 2.333 | 1.788 | 0.968 |
| | 115 | OTHR | -2.411 | -1.386 | -0.507 | -0.180 | 0.209 | 0.459 | -0.382 | -0.646 |
| | | TEMP | -0.198 | -0.082 | 0.185 | 6.662 | 2.336 | -0.255 | 0.533 | 0.941 |
| | | SEIS | 3.373 | 0.441 | 2.448 | 0.412 | 1.284 | 2.666 | 1.372 | 0.988 |
| | 120 | OTHR | -1.802 | -0.979 | -0.132 | 0.826 | 0.326 | 0.105 | -0.334 | -0.022 |
| | | TEMP | -0.949 | -1.034 | -0.271 | 3.316 | 3.332 | 1.777 | 1.350 | 1.269 |
| | | SEIS | 0.816 | 0.866 | 0.356 | 1.269 | 1.199 | 0.883 | 1.160 | 0.929 |
| Slab B1F EL-2.0m | 567 | OTHR | -0.988 | -0.058 | -0.003 | -0.078 | -0.025 | -0.005 | -0.095 | 0.028 |
| | | TEMP | -0.720 | 0.380 | 0.045 | -0.078 | -0.091 | 0.002 | -0.003 | 0.006 |
| | | SEIS | 0.033 | 0.607 | 0.508 | 0.089 | 0.087 | 0.025 | 0.064 | 0.142 |
| | 572 | OTHR | -1.507 | -0.581 | 0.105 | -0.012 | -0.015 | 0.009 | 0.110 | -0.007 |
| | | TEMP | 0.331 | -0.756 | -0.056 | -0.030 | -0.063 | 0.003 | -0.023 | 0.000 |
| | | SEIS | 0.287 | 0.250 | 0.301 | 0.049 | 0.017 | 0.006 | 0.075 | 0.006 |
| | 615 | OTHR | -0.478 | -0.436 | 0.021 | -0.047 | -0.009 | 0.024 | -0.054 | 0.006 |
| | | TEMP | -0.858 | 0.641 | -0.723 | -0.078 | -0.033 | 0.006 | -0.032 | -0.073 |
| | | SEIS | 0.294 | 0.301 | 0.555 | 0.050 | 0.066 | 0.022 | 0.053 | 0.055 |
| | 620 | OTHR | -0.703 | -0.345 | 0.932 | -0.022 | -0.036 | -0.034 | 0.030 | 0.052 |
| | | TEMP | -0.970 | -0.965 | -1.402 | -0.066 | -0.065 | 0.009 | 0.007 | 0.005 |
| | | SEIS | 0.241 | 0.176 | 0.334 | 0.035 | 0.039 | 0.021 | 0.045 | 0.048 |
| Slab 1F EL4.65m | 1067 | OTHR | -0.319 | -0.076 | -0.015 | 0.189 | 0.071 | -0.012 | 0.032 | 0.025 |
| | | TEMP | -1.315 | -0.447 | -0.012 | 0.062 | 0.026 | 0.001 | 0.003 | -0.003 |
| | | SEIS | 0.081 | 0.051 | 0.040 | 0.151 | 0.059 | 0.011 | 0.028 | 0.022 |
| | 1072 | OTHR | -0.727 | -0.284 | 0.058 | -0.117 | -0.022 | -0.002 | 0.124 | 0.005 |
| | | TEMP | -0.170 | -1.780 | -0.097 | 0.184 | 0.081 | 0.007 | -0.061 | -0.001 |
| | | SEIS | 0.220 | 0.278 | 0.286 | 0.088 | 0.015 | 0.004 | 0.083 | 0.005 |
| | 1115 | OTHR | -0.187 | -0.177 | 0.197 | -0.023 | -0.202 | -0.008 | 0.001 | 0.179 |
| | | TEMP | -1.419 | 0.046 | 0.018 | 0.065 | 0.113 | 0.002 | -0.008 | -0.017 |
| | | SEIS | 0.343 | 0.164 | 0.262 | 0.031 | 0.175 | 0.009 | 0.004 | 0.139 |
| | 1120 | OTHR | -0.260 | -0.067 | 0.376 | -0.038 | -0.020 | -0.009 | 0.035 | 0.023 |
| | | TEMP | -1.987 | -1.963 | -2.417 | 0.130 | 0.129 | -0.007 | -0.033 | -0.031 |
| | | SEIS | 0.152 | 0.135 | 0.176 | 0.036 | 0.043 | 0.018 | 0.045 | 0.049 |

## Table 3G.2-15 Combined Forces and Moments: Selected Load Combination CB-9 (Continued)

| Location | Element ID | | Nx (MN/m) | Ny (MN/m) | Nxy (MN/m) | Mx (MNm/m) | My (MNm/m) | Mxy (MNm/m) | Qx (MN/m) | Qy (MN/m) |
|---|---|---|---|---|---|---|---|---|---|---|
| Slab 2F EL9.06m | 1567 | OTHR | 0.018 | 0.062 | -0.017 | 0.097 | 0.007 | -0.004 | 0.018 | 0.011 |
| | | TEMP | -2.552 | -1.076 | 0.015 | -0.027 | -0.087 | 0.002 | 0.004 | 0.000 |
| | | SEIS | 0.050 | 0.088 | 0.044 | 0.092 | 0.009 | 0.006 | 0.021 | 0.011 |
| | 1572 | OTHR | 0.081 | -0.049 | -0.011 | -0.057 | -0.016 | -0.001 | 0.091 | 0.000 |
| | | TEMP | -0.679 | -3.420 | -0.099 | 0.070 | -0.022 | 0.008 | -0.099 | 0.006 |
| | | SEIS | 0.162 | 0.325 | 0.372 | 0.049 | 0.015 | 0.003 | 0.081 | 0.002 |
| | 1615 | OTHR | 0.045 | 0.136 | -0.034 | -0.011 | -0.145 | -0.007 | 0.008 | 0.155 |
| | | TEMP | -2.425 | 0.082 | -0.110 | 0.043 | 0.193 | -0.031 | 0.036 | -0.087 |
| | | SEIS | 0.810 | 0.263 | 0.045 | 0.016 | 0.142 | 0.008 | 0.010 | 0.148 |
| | 1620 | OTHR | 0.033 | 0.014 | -0.070 | -0.021 | -0.020 | -0.018 | 0.021 | 0.026 |
| | | TEMP | -3.153 | -3.133 | -4.149 | -0.051 | -0.057 | 0.025 | 0.020 | 0.029 |
| | | SEIS | 0.125 | 0.138 | 0.193 | 0.023 | 0.026 | 0.016 | 0.028 | 0.032 |
| Roof EL13.8m | 1867 | OTHR | -0.084 | -0.071 | -0.003 | 0.173 | 0.074 | -0.007 | 0.021 | 0.005 |
| | | TEMP | 1.500 | 1.282 | -0.012 | -0.783 | -1.023 | 0.001 | 0.015 | -0.006 |
| | | SEIS | 0.131 | 0.096 | 0.058 | 0.231 | 0.076 | 0.013 | 0.039 | 0.006 |
| | 1872 | OTHR | -0.047 | -0.113 | -0.005 | -0.057 | -0.016 | 0.003 | 0.086 | -0.001 |
| | | TEMP | 1.774 | 1.355 | 0.412 | -0.232 | -0.745 | 0.032 | -0.330 | 0.023 |
| | | SEIS | 0.342 | 0.751 | 0.479 | 0.052 | 0.027 | 0.012 | 0.093 | 0.005 |
| | 1915 | OTHR | -0.085 | -0.129 | -0.012 | -0.009 | -0.154 | -0.005 | -0.004 | 0.160 |
| | | TEMP | 1.949 | 1.114 | 0.485 | -0.695 | -0.400 | 0.008 | 0.017 | -0.146 |
| | | SEIS | 1.155 | 0.310 | 0.353 | 0.016 | 0.183 | 0.019 | 0.006 | 0.205 |
| | 1920 | OTHR | -0.011 | -0.049 | 0.026 | -0.022 | -0.021 | -0.046 | 0.015 | 0.021 |
| | | TEMP | -0.003 | -0.164 | 0.493 | -0.634 | -0.644 | -0.022 | -0.011 | 0.005 |
| | | SEIS | 0.247 | 0.189 | 0.042 | 0.028 | 0.030 | 0.057 | 0.032 | 0.034 |

## Table 3G.2-15 Combined Forces and Moments: Selected Load Combination CB-9 (Continued)

| Location | Element ID | | Nx (MN/m) | Ny (MN/m) | Nxy (MN/m) | Mx (MNm/m) | My (MNm/m) | Mxy (MNm/m) | Qx (MN/m) | Qy (MN/m) |
|---|---|---|---|---|---|---|---|---|---|---|
| Wall EL-7.4m to EL-2.0m | 6007 | OTHR | -0.856 | -0.748 | -0.908 | 0.052 | 0.097 | 0.029 | 0.051 | 0.202 |
| | | TEMP | 0.521 | 1.371 | -0.057 | 0.642 | 0.904 | 0.004 | -0.032 | 0.165 |
| | | SEIS | 1.441 | 1.597 | 2.697 | 0.095 | 0.107 | 0.032 | 0.122 | 0.156 |
| | 4006 | OTHR | -0.359 | -0.658 | -0.024 | -0.067 | -0.390 | 0.001 | -0.004 | -0.712 |
| | | TEMP | 0.756 | -0.069 | 0.091 | -0.688 | -1.068 | -0.002 | -0.001 | -0.194 |
| | | SEIS | 1.098 | 2.592 | 2.174 | 0.050 | 0.262 | 0.019 | 0.011 | 0.343 |
| | 4010 | OTHR | -0.278 | -0.450 | -0.037 | -0.063 | -0.156 | 0.077 | 0.074 | -0.304 |
| | | TEMP | 1.043 | 1.253 | -0.324 | -0.531 | -0.881 | -0.042 | -0.156 | -0.334 |
| | | SEIS | 0.498 | 1.401 | 1.234 | 0.097 | 0.181 | 0.072 | 0.098 | 0.164 |
| Wall EL-2.0m to EL4.65m | 6043 | OTHR | -0.529 | -1.111 | -0.549 | 0.044 | 0.037 | -0.010 | 0.046 | 0.212 |
| | | TEMP | 2.535 | -1.168 | -0.671 | 0.378 | 0.483 | -0.026 | 0.127 | 0.061 |
| | | SEIS | 0.905 | 1.691 | 1.927 | 0.109 | 0.189 | 0.031 | 0.097 | 0.615 |
| | 4036 | OTHR | -0.679 | -0.361 | 0.034 | 0.029 | 0.082 | -0.004 | 0.021 | -0.562 |
| | | TEMP | 2.463 | -0.411 | -0.013 | -0.289 | -0.300 | 0.001 | 0.031 | 0.070 |
| | | SEIS | 0.653 | 1.919 | 1.969 | 0.036 | 0.137 | 0.008 | 0.026 | 0.542 |
| | 4040 | OTHR | -0.403 | -0.880 | 0.399 | -0.107 | 0.000 | 0.101 | 0.213 | -0.163 |
| | | TEMP | 1.381 | 1.392 | -0.606 | -0.080 | -0.300 | -0.047 | -0.217 | -0.181 |
| | | SEIS | 0.399 | 1.411 | 1.808 | 0.130 | 0.056 | 0.123 | 0.182 | 0.196 |
| Wall EL4.65m to EL9.06m | 6081 | OTHR | -0.321 | -0.600 | 0.102 | 0.000 | -0.018 | -0.001 | -0.001 | -0.041 |
| | | TEMP | 5.519 | -0.786 | 0.338 | 1.391 | 1.000 | 0.007 | -0.048 | -0.161 |
| | | SEIS | 0.826 | 1.100 | 1.211 | 0.066 | 0.406 | 0.032 | 0.022 | 0.112 |
| | 4066 | OTHR | -0.407 | -0.280 | 0.056 | -0.042 | -0.294 | -0.008 | 0.008 | -0.055 |
| | | TEMP | 6.358 | -0.464 | -0.042 | -1.488 | -1.021 | 0.000 | -0.021 | 0.188 |
| | | SEIS | 0.632 | 0.898 | 1.331 | 0.058 | 0.328 | 0.010 | 0.016 | 0.089 |
| | 4070 | OTHR | -0.097 | -0.419 | 0.271 | -0.025 | -0.089 | -0.073 | 0.005 | -0.047 |
| | | TEMP | 3.596 | 1.323 | -1.489 | -1.232 | -1.167 | -0.021 | -0.332 | -0.163 |
| | | SEIS | 0.153 | 0.669 | 1.509 | 0.041 | 0.101 | 0.085 | 0.022 | 0.064 |
| Wall EL9.06m to EL13.8m | 6117 | OTHR | -0.057 | -0.362 | 0.001 | -0.013 | -0.087 | 0.004 | 0.005 | -0.100 |
| | | TEMP | 3.560 | -0.619 | -1.500 | 0.908 | 1.500 | -0.022 | -0.038 | 0.385 |
| | | SEIS | 0.749 | 0.605 | 0.767 | 0.013 | 0.082 | 0.006 | 0.006 | 0.115 |
| | 4096 | OTHR | -0.154 | -0.190 | 0.020 | 0.007 | 0.041 | -0.001 | -0.005 | 0.055 |
| | | TEMP | 3.980 | -0.285 | -0.182 | -0.936 | -1.566 | -0.001 | 0.034 | -0.463 |
| | | SEIS | 0.563 | 0.406 | 0.687 | 0.014 | 0.059 | 0.002 | 0.005 | 0.062 |
| | 4100 | OTHR | -0.005 | -0.072 | 0.071 | 0.005 | 0.006 | -0.001 | -0.006 | 0.008 |
| | | TEMP | 2.844 | 1.752 | -1.526 | -0.681 | -1.227 | -0.002 | -0.347 | -0.594 |
| | | SEIS | 0.112 | 0.380 | 0.846 | 0.015 | 0.016 | 0.008 | 0.015 | 0.023 |

*OTHR: Loads other than thermal and seismic loads*
*TEMP: Thermal loads*
*SI to U.S. Customary units conversion (SI units are the controlling units and U.S. Customary units are for reference only):*
*1 MN/m = $6.852 \times 10^4$ lbf/ft*
*1 MNm/m = $2.248 \times 10^5$ lbf-ft/ft*

## Table 3G.2-16 Sectional Thicknesses and Rebar Ratios Used in the Evaluation

| Location | Element ID | Thickness (m) | Primary Reinforcement | | | | | Shear Tie | |
|---|---|---|---|---|---|---|---|---|---|
| | | | Position | Direction 1 *1 | | Direction 2 *1 | | | |
| | | | | Arrangement | Ratio (%) | Arrangement | Ratio (%) | Arrangement | Ratio (%) |
| Basemat EL-7.4 | 67<br>72 | 3.0 | Top | 2-#11@200 | 0.335 | 2-#11@200 | 0.335 | #6@400x400 | 0.177 |
| | | | Bottom | 2-#11@200 | 0.335 | 2-#11@200 | 0.335 | | |
| | 115<br>120 | 3.0 | Top | 2-#11@200 | 0.335 | 2-#11@200 | 0.335 | #6@400x400 | 0.177 |
| | | | Bottom | 2-#11@200 | 0.335 | 2-#11@200 | 0.335 | | |
| Slab B1F EL-2.0 | 567 | 0.5 | Top | 1-#11@200 | 1.006 | 1-#11@200 | 1.006 | - | - |
| | | | Bottom | 1-#11@200 | 1.006 | 1-#11@200 | 1.006 | | |
| | 572<br>615<br>620 | | Top | 1-#11@200 | 1.006 | 1-#11@200 | 1.006 | - | - |
| | | | Bottom | 1-#11@200 | 1.006 | 1-#11@200 | 1.006 | | |
| Slab 1F EL4.65 | 1067<br>1072<br>1115<br>1120 | 0.5 | Top | 1-#11@200 | 1.006 | 1-#11@200 | 1.006 | - | - |
| | | | Bottom | 1-#11@200 | 1.006 | 1-#11@200 | 1.006 | | |
| Slab 2F EL9.06m | 1567<br>1572<br>1620 | 0.5 | Top | 1-#11@200 | 1.006 | 1-#11@200 | 1.006 | - | - |
| | | | Bottom | 1-#11@200 | 1.006 | 1-#11@200 | 1.006 | | |
| | 1615 | | Top | 1-#11@200 | 1.006 | 1-#11@200 | 1.006 | #4@400x400 | 0.081 |
| | | | Bottom | 1-#11@200 | 1.006 | 1-#11@200 | 1.006 | | |
| Roof EL13.8m | 1867<br>1872<br>1915<br>1920 | 0.7 | Top | 1-#11@200<br>+ 1-#11@400 | 1.078 | 1-#11@200<br>+ 1-#11@400 | 1.078 | - | - |
| | | | Bottom | 1-#11@200<br>+ 1-#11@400 | 1.078 | 1-#11@200<br>+ 1-#11@400 | 1.078 | | |

## Table 3G.2-16 Sectional Thicknesses and Rebar Ratios Used in the Evaluation (Continued)

| Location | Element ID | Thickness (m) | Primary Reinforcement | | | | | Shear Tie | |
|---|---|---|---|---|---|---|---|---|---|
| | | | Position | Directtion 1*1 | | Directtion 2*1 | | | |
| | | | | Arrangement | Ratio (%) | Arrangement | Ratio (%) | Arrangement | Ratio (%) |
| Wall EL-7.4m to EL-2.0m | 6007 | 0.9 | Inside | 2-#11@200 | 1.118 | 2-#11@200 | 1.118 | #6@200x400 | 0.355 |
| | | | Outside | 2-#11@200 | 1.118 | 2-#11@200 | 1.118 | | |
| | 4006<br>4010 | 0.9 | Inside | 2-#11@200 | 1.118 | 2-#11@200 | 1.118 | #6@200x400 | 0.355 |
| | | | Outside | 2-#11@200 | 1.118 | 2-#11@200 | 1.118 | | |
| Wall EL-2.0m to EL4.65m | 6043<br>4040 | 0.9 | Inside | 2-#11@200 | 1.118 | 2-#11@200 | 1.118 | #6@200x400 | 0.355 |
| | | | Outside | 2-#11@200 | 1.118 | 2-#11@200 | 1.118 | | |
| | 4036 | 0.9 | Inside | 2-#11@200 | 1.118 | 2-#11@200 | 1.118 | #6@200x200 | 0.710 |
| | | | Outside | 2-#11@200 | 1.118 | 2-#11@200 | 1.118 | | |
| Wall EL4.65m to EL9.06m | 6081<br>4066<br>4070 | 0.9 | Inside | 2-#11@200 | 1.118 | 2-#11@200 | 1.118 | - | - |
| | | | Outside | 2-#11@200 | 1.118 | 2-#11@200 | 1.118 | | |
| Wall EL9.06m to EL13.8m | 6117 | 0.7 | Inside | 1-#11@200 | 0.719 | 1-#11@200 | 0.719 | - | - |
| | | | Outside | 1-#11@200<br>+ 1-#11@400 | 1.078 | 1-#11@200<br>+ 1-#11@400 | 1.078 | | |
| | 4096<br>4100 | 0.7 | Inside | 1-#11@200 | 0.719 | 1-#11@200 | 0.719 | - | - |
| | | | Outside | 1-#11@200<br>+ 1-#11@400 | 1.078 | 1-#11@200<br>+ 1-#11@400 | 1.078 | | |

*Note*1:* *Wall* *Direction 1:Horizontal,* *Direction 2: Vertical*
*Basemat, Slab, Roof* *Direction 1:N-S,* *Direction 2:HE-W*

*SI to U.S. Customary units conversion (SI units are the controlling units and U.S. Customary units are for reference only): 1 m = 3.28 ft*

## Table 3G.2-17 Rebar and Concrete Stresses (Basemat and Slabs): Selected Load Combination CB-3

| Location | Element ID | Concrete Stress (MPa) | | Primary Reinforcement Stress (MPa) | | | | |
|---|---|---|---|---|---|---|---|---|
| | | Calculated | Allowable | Calculated | | | | Allowable |
| | | | | X-direction | | Y-direction | | |
| | | | | Top | Bottom | Top | Bottom | |
| Basemat EL-7.4m | 67 | -1.7 | -20.7 | -1.7 | -10.9 | -6.0 | -8.2 | 372.2 |
| | 72 | -3.4 | | -23.3 | 5.2 | -4.7 | 6.2 | |
| | 115 | -1.9 | | -7.6 | -10.1 | -6.1 | -2.3 | |
| | 120 | -1.8 | | -12.5 | -1.9 | -4.6 | -1.4 | |
| Slab B1F EL-2.0m | 567 | -5.5 | -25.9 | -12.7 | -28.1 | 0.8 | -2.7 | 372.2 |
| | 572 | -5.0 | | -29.7 | -31.3 | -6.3 | -9.7 | |
| | 615 | -3.6 | | -4.7 | -14.1 | -7.9 | -8.5 | |
| | 620 | -8.4 | | 110.2 | 19.1 | 141.0 | 20.1 | |
| Slab 1F EL4.65m | 1067 | -13.9 | -25.9 | -10.8 | 112.6 | -2.4 | 46.4 | 372.2 |
| | 1072 | -7.6 | | 10.8 | -27.5 | -1.4 | -4.3 | |
| | 1115 | -11.9 | | 37.1 | 8.4 | 155.5 | -28.0 | |
| | 1120 | -4.4 | | 64.2 | 6.2 | 70.1 | 14.6 | |
| Slab 2F EL9.06m | 1567 | -7.4 | -25.9 | 4.1 | 90.5 | 7.2 | 24.8 | 372.2 |
| | 1572 | -4.4 | | 67.9 | 8.1 | 7.4 | -0.7 | |
| | 1615 | -7.5 | | 14.0 | 6.0 | 133.3 | -11.6 | |
| | 1620 | -3.3 | | 22.9 | 14.1 | 17.7 | 16.2 | |
| Roof EL13.8m | 1867 | -5.6 | -25.9 | 0.2 | 56.3 | -2.2 | 20.9 | 372.2 |
| | 1872 | -2.1 | | 20.8 | -0.9 | -0.2 | -1.3 | |
| | 1915 | -4.1 | | -0.5 | 0.0 | 45.0 | -9.8 | |
| | 1920 | -2.9 | | 25.2 | 5.9 | 23.5 | 1.1 | |

Note: Negative value means compression.

*SI to U.S. Customary units conversion (SI units are the controlling units and U.S. Customary units are for reference only):*
*1 MPa = 145.038 psi*
*1 m = 3.28 ft*

## Table 3G.2-18 Rebar and Concrete Stresses (Walls): Selected Load Combination CB-3

| Location | Element ID | Concrete Stress (MPa) | | Primary Reinforcement Stress (MPa) | | | | |
|---|---|---|---|---|---|---|---|---|
| | | Calculated | Allowable | Calculated | | | | Allowable |
| | | | | Horizontal direction | | Vertical direction | | |
| | | | | Inside | Outside | Inside | Outside | |
| Wall EL-7.4m to EL-2.0m | 6007 | -4.0 | -25.9 | 0.7 | 19.6 | -2.9 | 31.6 | 372.2 |
| | 4006 | -7.9 | | -3.6 | -1.7 | -16.1 | 58.8 | |
| | 4010 | -5.0 | | -3.8 | 17.0 | -8.3 | 23.0 | |
| Wall EL-2.0m to EL4.65m | 6043 | -2.4 | -25.9 | -6.6 | -2.5 | -10.2 | -7.2 | 372.2 |
| | 4036 | -1.5 | | -6.9 | -8.4 | 1.3 | -4.1 | |
| | 4040 | -3.7 | | -8.1 | 1.7 | -5.1 | -9.5 | |
| Wall EL4.65m to EL9.06m | 6081 | -1.0 | -25.9 | -3.0 | -2.8 | -5.2 | -4.9 | 372.2 |
| | 4066 | -6.9 | | -3.7 | -1.1 | -8.2 | 67.7 | |
| | 4070 | -4.3 | | 5.0 | 35.6 | -2.8 | 36.0 | |
| Wall EL9.06m to EL13.8m | 6117 | -2.7 | -25.9 | -0.1 | -0.2 | 10.0 | -7.7 | 372.2 |
| | 4096 | -1.2 | | -1.6 | -1.6 | 2.5 | -3.8 | |
| | 4100 | -0.3 | | 9.1 | 2.0 | 4.8 | 1.0 | |

*Note: Negative value means compression*

*SI to U.S. Customary units conversion (SI units are the controlling units and U.S. Customary units are for reference only):*
*1 MPa = 145.038 psi*
*1 m = 3.28 ft*

## Table 3G.2-19 Rebar and Concrete Stresses (Basemat and Slabs): Selected Load Combination CB-4

| Location | Element ID | Concrete Stress (MPa) | | Primary Reinforcement Stress (MPa) | | | | |
|---|---|---|---|---|---|---|---|---|
| | | Calculated | Allowable | Calculated | | | | Allowable |
| | | | | X-direction | | Y-direction | | |
| | | | | Top | Bottom | Top | Bottom | |
| Basemat EL-7.4m | 67 | -1.5 | -23.5 | -6.5 | -2.4 | -9.4 | -1.1 | 372.2 |
| | 72 | -2.7 | | -17.9 | 4.5 | -5.4 | 14.1 | |
| | 115 | -1.8 | | -8.6 | 0.0 | -6.0 | -1.0 | |
| | 120 | -1.8 | | -11.8 | 0.2 | -6.4 | 0.4 | |
| Slab B1F EL-2.0m | 567 | -4.8 | -29.3 | -12.2 | -24.8 | 1.5 | -1.5 | 372.2 |
| | 572 | -4.1 | | -19.9 | -23.4 | -8.6 | -10.4 | |
| | 615 | -3.3 | | -9.2 | -16.4 | -3.7 | -4.2 | |
| | 620 | -5.4 | | 67.1 | 7.1 | 88.9 | 7.0 | |
| Slab 1F EL4.65m | 1067 | -8.4 | -29.3 | -28.9 | 13.8 | -8.9 | 4.5 | 372.2 |
| | 1072 | -3.8 | | -6.7 | -12.8 | -22.8 | -23.3 | |
| | 1115 | -8.0 | | -13.9 | -18.9 | 102.7 | -18.2 | |
| | 1120 | -6.9 | | -21.2 | -23.0 | -22.2 | -14.5 | |
| Slab 2F EL9.06m | 1567 | -5.1 | -29.3 | -29.6 | -18.9 | 2.8 | -13.3 | 372.2 |
| | 1572 | -6.3 | | 33.7 | 4.2 | -30.0 | -39.1 | |
| | 1615 | -4.2 | | -18.9 | -19.6 | 82.2 | 1.3 | |
| | 1620 | -14.2 | | 74.8 | 38.5 | 75.9 | 37.3 | |
| Roof EL13.8m | 1867 | -0.6 | -29.3 | -8.6 | 39.6 | 47.9 | -15.9 | 372.2 |
| | 1872 | -4.4 | | 65.8 | 15.4 | 79.2 | -0.3 | |
| | 1915 | -4.4 | | 53.0 | 15.0 | 66.7 | -4.6 | |
| | 1920 | -10.6 | | 104.4 | 13.3 | 111.8 | -6.9 | |

Note: Negative value means compression.

*SI to U.S. Customary units conversion (SI units are the controlling units and U.S. Customary units are for reference only):*
*1 MPa = 145.038 psi*
*1 m = 3.28 ft*

## Table 3G.2-20 Rebar and Concrete Stresses (Walls): Selected Load Combination CB-4

| Location | Element ID | Concrete Stress (MPa) | | Primary Reinforcement Stress (MPa) | | | | |
|---|---|---|---|---|---|---|---|---|
| | | Calculated | Allowable | Calculated | | | | Allowable |
| | | | | Horizontal direction | | Vertical direction | | |
| | | | | Inside | Outside | Inside | Outside | |
| Wall EL-7.4m to EL-2.0m | 6007 | -3.8 | -29.3 | -0.8 | 32.8 | -0.7 | 40.4 | 372.2 |
| | 4006 | -6.8 | | -1.2 | 1.8 | -14.3 | 49.2 | |
| | 4010 | -4.4 | | -4.6 | 19.7 | -1.9 | 29.0 | |
| Wall EL-2.0m to EL4.65m | 6043 | -3.5 | -29.3 | -7.4 | 0.3 | -15.9 | -6.2 | 372.2 |
| | 4036 | -1.6 | | -7.1 | -1.9 | -8.2 | -6.0 | |
| | 4040 | -2.7 | | 9.3 | 16.8 | 24.8 | -2.7 | |
| Wall EL4.65m to EL9.06m | 6081 | -6.9 | -29.3 | 20.4 | 76.6 | -21.7 | 24.4 | 372.2 |
| | 4066 | -11.6 | | 34.6 | 99.3 | -27.1 | 72.0 | |
| | 4070 | -7.8 | | 32.3 | 112.8 | -4.5 | 91.6 | |
| Wall EL9.06m to EL13.8m | 6117 | -11.5 | -29.3 | 33.6 | 97.5 | -21.4 | 86.8 | 372.2 |
| | 4096 | -7.6 | | 15.7 | 57.8 | -16.3 | 57.0 | |
| | 4100 | -6.9 | | 27.2 | 78.7 | -0.3 | 95.5 | |

Note: Negative value means compression.

*SI to U.S. Customary units conversion (SI units are the controlling units and U.S. Customary units are for reference only):*
*1 MPa = 145.038 psi*
*1 m = 3.28 ft*

## Table 3G.2-21 Rebar and Concrete Stresses (Basemat and Slabs): Selected Load Combination CB-7

| Location | Element ID | Concrete Stress (MPa) | | Primary Reinforcement Stress (MPa) | | | | |
|---|---|---|---|---|---|---|---|---|
| | | Calculated | Allowable | Calculated | | | | Allowable |
| | | | | X-direction | | Y-direction | | |
| | | | | Top | Bottom | Top | Bottom | |
| Basemat EL-7.4m | 67 | -1.0 | -23.5 | -4.5 | -2.2 | -6.9 | -1.9 | 372.2 |
| | 72 | -2.0 | | -13.2 | 2.4 | -3.7 | 7.6 | |
| | 115 | -1.3 | | -7.1 | -0.1 | -4.5 | -1.1 | |
| | 120 | -1.4 | | -9.1 | 0.3 | -5.0 | 0.4 | |
| Slab B1F EL-2.0m | 567 | -3.9 | -29.3 | -9.0 | -19.7 | 7.6 | -0.1 | 372.2 |
| | 572 | -3.2 | | -15.0 | -18.1 | -6.1 | -8.0 | |
| | 615 | -2.6 | | -6.4 | -12.7 | -2.6 | -3.1 | |
| | 620 | -4.4 | | 58.6 | 6.6 | 75.8 | 6.0 | |
| Slab 1F EL4.65m | 1067 | -8.4 | -29.3 | -21.2 | 32.8 | -6.8 | 8.9 | 372.2 |
| | 1072 | -2.9 | | -4.9 | -10.1 | -17.2 | -17.8 | |
| | 1115 | -7.3 | | -9.7 | -14.1 | 95.9 | -16.0 | |
| | 1120 | -5.4 | | -16.0 | -17.8 | -16.8 | -11.3 | |
| Slab 2F EL9.06m | 1567 | -4.3 | -29.3 | -24.0 | -13.6 | 2.8 | -10.4 | 372.2 |
| | 1572 | -4.9 | | 28.6 | 3.7 | -22.7 | -30.1 | |
| | 1615 | -3.8 | | -14.4 | -14.9 | 75.8 | 0.1 | |
| | 1620 | -11.1 | | 58.9 | 31.0 | 59.7 | 30.4 | |
| Roof EL13.8m | 1867 | -0.2 | -29.3 | -6.5 | 27.2 | 37.9 | -13.7 | 372.2 |
| | 1872 | -3.4 | | 43.1 | 10.5 | 49.6 | -1.1 | |
| | 1915 | -3.4 | | 42.2 | 11.5 | 53.3 | -3.3 | |
| | 1920 | -8.2 | | 80.3 | 10.3 | 86.1 | -5.3 | |

Note: Negative value means compression.

*SI to U.S. Customary units conversion (SI units are the controlling units and U.S. Customary units are for reference only):*
*1 MPa = 145.038 psi*
*1 m = 3.28 ft*

## Table 3G.2-22 Rebar and Concrete Stresses (Walls): Selected Load Combination CB-7

| Location | Element ID | Concrete Stress (MPa) | | Primary Reinforcement Stress (MPa) | | | | |
|---|---|---|---|---|---|---|---|---|
| | | Calculated | Allowable | Calculated | | | | Allowable |
| | | | | Horizontal direction | | Vertical direction | | |
| | | | | Inside | Outside | Inside | Outside | |
| Wall EL-7.4m to EL-2.0m | 6007 | -3.1 | -29.3 | -1.5 | 21.7 | -3.0 | 27.8 | 372.2 |
| | 4006 | -5.5 | | -0.8 | 1.8 | -13.8 | 34.5 | |
| | 4010 | -3.6 | | -2.9 | 17.8 | -1.7 | 25.9 | |
| Wall EL-2.0m to EL4.65m | 6043 | -2.9 | -29.3 | -5.6 | 1.0 | -13.9 | -6.5 | 372.2 |
| | 4036 | -1.2 | | -5.2 | -1.3 | -6.6 | -5.9 | |
| | 4040 | -2.0 | | 5.3 | 13.3 | 18.0 | -3.9 | |
| Wall EL4.65m to EL9.06m | 6081 | -5.2 | -29.3 | 16.0 | 59.4 | -17.2 | 16.4 | 372.2 |
| | 4066 | -8.6 | | 24.7 | 76.4 | -20.6 | 53.0 | |
| | 4070 | -7.2 | | 15.4 | 88.2 | 24.9 | 60.7 | |
| Wall EL9.06m to EL13.8m | 6117 | -8.8 | -29.3 | 25.8 | 74.9 | -16.7 | 65.1 | 372.2 |
| | 4096 | -5.8 | | 12.2 | 45.2 | -12.8 | 42.1 | |
| | 4100 | -5.3 | | 20.3 | 61.3 | -0.2 | 72.8 | |

Note: Negative value means compression.

*SI to U.S. Customary units conversion (SI units are the controlling units and U.S. Customary units are for reference only):*
*1 MPa = 145.038 psi*
*1 m = 3.28 ft*

## Table 3G.2-23 Rebar and Concrete Stresses (Basemat and Slabs): Selected Load Combination CB-9

| Location | Element ID | Concrete Stress (MPa) | | Primary Reinforcement Stress (MPa) | | | | |
|---|---|---|---|---|---|---|---|---|
| | | Calculated | Allowable | Calculated | | | | Allowable |
| | | | | X-direction | | Y-direction | | |
| | | | | Top | Bottom | Top | Bottom | |
| Basemat EL-7.4m | 67 | -6.8 | -23.5 | -20.9 | 49.9 | -40.0 | 69.9 | 372.2 |
| | 72 | -11.9 | | -52.9 | 235.8 | 150.3 | 265.0 | |
| | 115 | -6.9 | | 127.3 | 132.5 | 144.5 | -28.6 | |
| | 120 | -5.9 | | -24.6 | 26.6 | -19.7 | 29.2 | |
| Slab B1F EL-2.0m | 567 | -11.6 | -29.3 | 38.7 | -29.0 | 172.6 | 28.0 | 372.2 |
| | 572 | -5.9 | | -10.1 | -20.8 | -9.6 | -24.7 | |
| | 615 | -10.8 | | 74.5 | -16.2 | 86.6 | 19.9 | |
| | 620 | -8.6 | | -13.8 | -28.4 | -6.5 | -26.4 | |
| Slab 1F EL4.65m | 1067 | -19.6 | -29.3 | -27.7 | 128.3 | -7.3 | 58.4 | 372.2 |
| | 1072 | -6.8 | | -19.7 | 7.3 | -32.0 | -22.2 | |
| | 1115 | -12.7 | | -17.3 | -16.2 | 168.0 | -30.8 | |
| | 1120 | -9.6 | | -19.7 | 26.7 | -26.6 | 42.0 | |
| Slab 2F EL9.06m | 1567 | -8.1 | -29.3 | -42.5 | -30.3 | 1.7 | -19.7 | 372.2 |
| | 1572 | -7.8 | | -7.3 | 2.4 | -40.2 | -51.9 | |
| | 1615 | -8.2 | | -41.8 | -36.8 | 169.7 | 32.3 | |
| | 1620 | -17.6 | | 89.8 | 57.2 | 91.5 | 56.0 | |
| Roof EL13.8m | 1867 | -16.5 | -29.3 | 73.6 | 127.6 | 80.7 | -34.4 | 372.2 |
| | 1872 | -3.9 | | 144.2 | 48.7 | 178.6 | 39.3 | |
| | 1915 | -8.0 | | 174.4 | 74.3 | 170.0 | 2.8 | |
| | 1920 | -15.0 | | 136.6 | 20.8 | 150.5 | -8.3 | |

Note: Negative value means compression.

*SI to U.S. Customary units conversion (SI units are the controlling units and U.S. Customary units are for reference only):*
*1 MPa = 145.038 psi*
*1 m = 3.28 ft*

## Table 3G.2-24 *Rebar and Concrete Stresses (Walls): Selected Load Combination CB-9*

| Location | Element ID | Concrete Stress (MPa) | | Primary Reinforcement Stress (MPa) | | | | |
|---|---|---|---|---|---|---|---|---|
| | | Calculated | Allowable | Calculated | | | | Allowable |
| | | | | Horizontal direction | | Vertical direction | | |
| | | | | Inside | Outside | Inside | Outside | |
| Wall EL-7.4m to EL-2.0m | 6007 | -11.5 | -29.3 | 70.1 | 216.2 | 71.6 | 245.5 | 372.2 |
| | 4006 | -14.4 | | 136.7 | 187.3 | 108.2 | 287.6 | |
| | 4010 | -10.4 | | 37.3 | 199.6 | 49.8 | 269.1 | |
| Wall EL-2.0m to EL4.65m | 6043 | -8.6 | -29.3 | 80.7 | 191.3 | -30.8 | 116.3 | 372.2 |
| | 4036 | -5.7 | | 91.8 | 96.4 | 147.3 | 153.2 | |
| | 4040 | -7.1 | | 98.9 | 109.4 | 152.8 | 114.4 | |
| Wall EL4.65m to EL9.06m | 6081 | -11.6 | -29.3 | 60.1 | 180.7 | 30.8 | 79.2 | 372.2 |
| | 4066 | -17.1 | | 72.7 | 197.4 | -16.4 | 183.9 | |
| | 4070 | -6.5 | | 112.3 | 183.6 | 52.7 | 211.8 | |
| Wall EL9.06m to EL13.8m | 6117 | -17.7 | -29.3 | 80.7 | 219.9 | -34.5 | 140.2 | 372.2 |
| | 4096 | -14.2 | | 61.6 | 161.8 | -17.7 | 143.4 | |
| | 4100 | -11.0 | | 79.1 | 167.4 | 21.3 | 234.4 | |

Note: Negative value means compression.

*SI to U.S. Customary units conversion (SI units are the controlling units and U.S. Customary units are for reference only):*
*1 MN/m=6.852x10$^4$ lbf/ft*
*1 m = 3.28 ft*

## Table 3G.2-25 Calculation Results for Transverse Shear

| Location | Element ID | Load ID | d (m) | $\rho_w$ (%) | $\rho_v$ (%) | Shear Forces (MN/m) | | | | Vu/ϕVn |
|---|---|---|---|---|---|---|---|---|---|---|
| | | | | | | Vu | Vc | Vs | ϕVn | |
| Basemat EL-7.4m | 67 | CB-9 | 2.818 | 0.357 | 0.177 | 3.159 | 3.751 | 2.065 | 4.943 | 0.639 |
| | 72 | CB-9 | 2.721 | 0.369 | 0.177 | 2.419 | 2.460 | 1.994 | 3.786 | 0.639 |
| | 115 | CB-9 | 2.799 | 0.359 | 0.177 | 1.654 | 1.917 | 2.051 | 3.373 | 0.490 |
| | 120 | CB-9 | 2.734 | 0.368 | 0.177 | 2.441 | 4.552 | 2.003 | 5.572 | 0.438 |
| Slab B1F EL-2.0m | 567 | CB-9 | 0.407 | 1.242 | 0.000 | 0.118 | 0.236 | 0.000 | 0.200 | 0.587 |
| | 572 | CB-9 | 0.360 | 1.402 | 0.000 | 0.185 | 0.884 | 0.000 | 0.752 | 0.246 |
| | 615 | CB-9 | 0.368 | 1.373 | 0.000 | 0.152 | 0.438 | 0.000 | 0.372 | 0.409 |
| | 620 | CB-9 | 0.392 | 1.288 | 0.000 | 0.125 | 0.262 | 0.000 | 0.223 | 0.559 |
| Slab 1F EL4.65m | 1067 | CB-9 | 0.379 | 1.333 | 0.000 | 0.077 | 0.360 | 0.000 | 0.306 | 0.250 |
| | 1072 | CB-9 | 0.360 | 1.402 | 0.000 | 0.207 | 0.688 | 0.000 | 0.584 | 0.355 |
| | 1115 | CB-9 | 0.410 | 1.232 | 0.000 | 0.318 | 0.416 | 0.000 | 0.353 | 0.899 |
| | 1120 | CB-9 | 0.382 | 1.321 | 0.000 | 0.108 | 0.323 | 0.000 | 0.275 | 0.394 |
| Slab 2F EL9.06m | 1567 | CB-9 | 0.373 | 1.356 | 0.000 | 0.045 | 0.354 | 0.000 | 0.301 | 0.150 |
| | 1572 | CB-9 | 0.360 | 1.403 | 0.000 | 0.172 | 0.300 | 0.000 | 0.255 | 0.676 |
| | 1615 | CB-9 | 0.410 | 1.232 | 0.081 | 0.303 | 0.308 | 0.137 | 0.379 | 0.799 |
| | 1620 | CB-9 | 0.389 | 1.297 | 0.000 | 0.076 | 0.405 | 0.000 | 0.345 | 0.220 |
| Slab RF EL13.8m | 1867 | CB-9 | 0.511 | 1.479 | 0.000 | 0.065 | 0.411 | 0.000 | 0.350 | 0.186 |
| | 1872 | CB-9 | 0.501 | 1.510 | 0.000 | 0.121 | 0.329 | 0.000 | 0.280 | 0.433 |
| | 1915 | CB-9 | 0.550 | 1.375 | 0.000 | 0.317 | 0.411 | 0.000 | 0.350 | 0.908 |
| | 1920 | CB-9 | 0.529 | 1.429 | 0.000 | 0.072 | 0.518 | 0.000 | 0.441 | 0.164 |
| Wall EL-7.4m to EL-2.0m | 6007 | CB-9 | 0.677 | 1.489 | 0.355 | 0.464 | 1.722 | 0.995 | 2.309 | 0.201 |
| | 4006 | CB-9 | 0.672 | 1.500 | 0.355 | 0.546 | 0.247 | 0.988 | 1.050 | 0.520 |
| | 4010 | CB-9 | 0.673 | 1.497 | 0.355 | 0.629 | 0.427 | 0.989 | 1.203 | 0.523 |
| Wall EL-2.0m to EL4.65m | 6043 | CB-9 | 0.673 | 1.499 | 0.355 | 0.407 | 0.461 | 0.989 | 1.233 | 0.330 |
| | 4036 | CB-4 | 0.672 | 1.500 | 0.710 | 0.791 | 0.654 | 1.975 | 2.235 | 0.354 |
| | 4040 | CB-9 | 0.683 | 1.476 | 0.355 | 0.635 | 0.873 | 1.004 | 1.595 | 0.398 |
| Wall EL4.65m to EL9.06m | 6081 | CB-9 | 0.673 | 1.497 | 0.000 | 0.316 | 1.047 | 0.000 | 0.890 | 0.355 |
| | 4066 | CB-9 | 0.672 | 1.499 | 0.000 | 0.222 | 0.679 | 0.000 | 0.577 | 0.384 |
| | 4070 | CB-9 | 0.699 | 1.442 | 0.000 | 0.111 | 0.294 | 0.000 | 0.250 | 0.445 |
| Wall EL9.06m to EL13.8m | 6117 | CB-9 | 0.493 | 1.533 | 0.000 | 0.401 | 0.564 | 0.000 | 0.480 | 0.835 |
| | 4096 | CB-9 | 0.493 | 1.533 | 0.000 | 0.470 | 0.626 | 0.000 | 0.532 | 0.883 |
| | 4100 | CB-9 | 0.507 | 1.490 | 0.000 | 0.139 | 0.309 | 0.000 | 0.262 | 0.529 |

*SI to U.S. Customary units conversion (SI units are the controlling units and U.S. Customary units are for reference only):*
*1 MN/m=6.852x10$^4$ lbf/ft*
*1 m = 3.28 ft*

## Table 3G.2-26 Factors of Safety for Foundation Stability

| Load Combination | Overturning | | Sliding | | Floatation | |
|---|---|---|---|---|---|---|
| | Required | Actual | Required | Actual | Required | Actual |
| D + H + E' | 1.1 | 62.5 | 1.1 | 1.11 | -- | -- |
| D + F' | -- | -- | -- | -- | 1.1 | 1.85 |

*Where,*

*D = Dead Load*

*H = Lateral soil pressure*

*E' = Safe Shutdown Earthquake*

*F' = Buoyant forces of design basis flood*

## Table 3G.2-26a Stresses of CB External Wall against Wall Capacity Passive Pressure: Selected Load Combination CB-9

| Location | Element ID | Concrete Stress (MPa) | | Primary Reinforcement Stress (MPa) | | | | |
|---|---|---|---|---|---|---|---|---|
| | | Calculated | Allowable | Calculated | | | | Allowable |
| | | | | Horizontal direction | | Vertical direction | | |
| | | | | Inside | Outside | Inside | Outside | |
| Wall EL-7.4m ~EL-2.0m | 6007 | -11.4 | -29.3 | 148.9 | 252.2 | 105.4 | 277.3 | 372.2 |
| | 4006 | -13.9 | | 69.7 | 190.8 | 143.4 | 241.0 | |
| | 4010 | -5.1 | | 95.5 | 144.2 | 60.6 | 225.4 | |
| Wall EL-2.0m ~EL4.65m | 6043 | -9.7 | -29.3 | 119.7 | 202.1 | -12.9 | 85.9 | 372.2 |
| | 4036 | -6.3 | | 95.0 | 131.5 | 154.3 | 147.7 | |
| | 4040 | -6.6 | | 129.7 | 159.5 | 190.7 | 190.1 | |

*Note: Negative value means compression.*

## Table 3G.2-26b Transverse Shear of CB External Walls

| Location | Element ID | Load ID | d (m) | $\rho_w$ (%) | $\rho_v$ (%) | Shear Forces (MN/m) | | | | Vu/ϕVn |
|---|---|---|---|---|---|---|---|---|---|---|
| | | | | | | Vu | Vc | Vs | ϕVn | |
| Wall EL−7.4m ~EL−2.0m | 6007 | CB−9 | 0.71 | 1.42 | 0.36 | 0.14 | 0.07 | 1.04 | 0.95 | 0.14 |
| | 4006 | CB−9 | 0.67 | 1.50 | 0.36 | 0.57 | 0.20 | 0.99 | 1.01 | 0.56 |
| | 4010 | CB−9 | 0.68 | 1.49 | 0.36 | 0.68 | 0.48 | 0.99 | 1.26 | 0.54 |
| Wall EL−2.0m ~EL4.65m | 6043 | CB−9 | 0.67 | 1.50 | 0.36 | 0.22 | 0.51 | 0.99 | 1.27 | 0.17 |
| | 4036 | CB−9 | 0.67 | 1.50 | 0.71 | 0.58 | 0.25 | 1.98 | 1.89 | 0.31 |
| | 4040 | CB−9 | 0.69 | 1.46 | 0.36 | 0.28 | 0.12 | 1.01 | 0.96 | 0.29 |

## Table 3G.2-27 Maximum Dynamic Soil Bearing Pressure Involving SSE + Static

| | Site Condition[1] | | |
|---|---|---|---|
| | Soft ($V_s$ = 300 m/sec) | Medium ($V_s$ = 800 m/sec) | Hard ($V_s \geq$ 1700 m/sec) |
| Bearing Stress (MPa) | 0.50 | 2.2 | 0.42 |

*(1) See Table 3A.3-1 for site properties. For site specific application, use the larger value or a linearly interpolated value of the applicable range of shear wave velocities at the foundation level.*

*SI to U.S. Customary units conversion (SI units are the controlling units and U.S. Customary units are for reference only):*
*1 MPa = 145.038 psi*
*1 m = 3.28 ft*

***Figure 3G.2-1. CB Concrete Outline Plan at EL -7400 and Foundation Reinforcement***

*{{{Security-Related Information - Withhold Under 10 CFR 2.390}}}*

*Note: All dimensions are in mm unless otherwise noted.*

***Figure 3G.2-2. CB Concrete Outline Plant EL –2000/4650 and Section Details***

*{{{Security-Related Information - Withhold Under 10 CFR 2.390}}}*

## *Figure 3G.2-3. CB Concrete Outline Plan at EL 9060/13800, Section and Section Detail*

*Note: All dimensions are in mm unless otherwise noted.*

*{{{Security-Related Information - Withhold Under 10 CFR 2.390}}}*

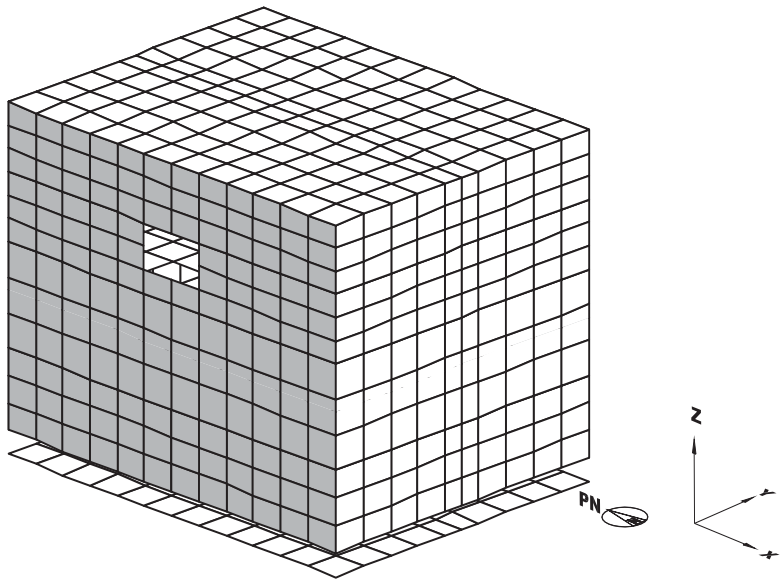


*Whole View*

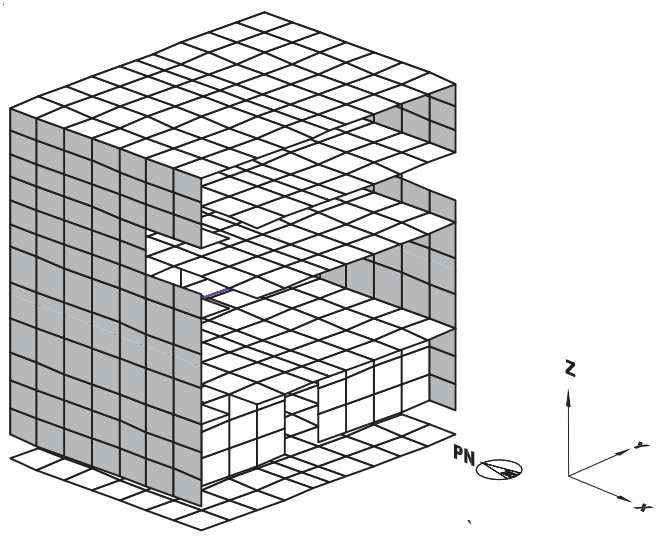


*Cut View*

***Figure 3G.2-4. Finite Element Model of CB (Isometric View)***

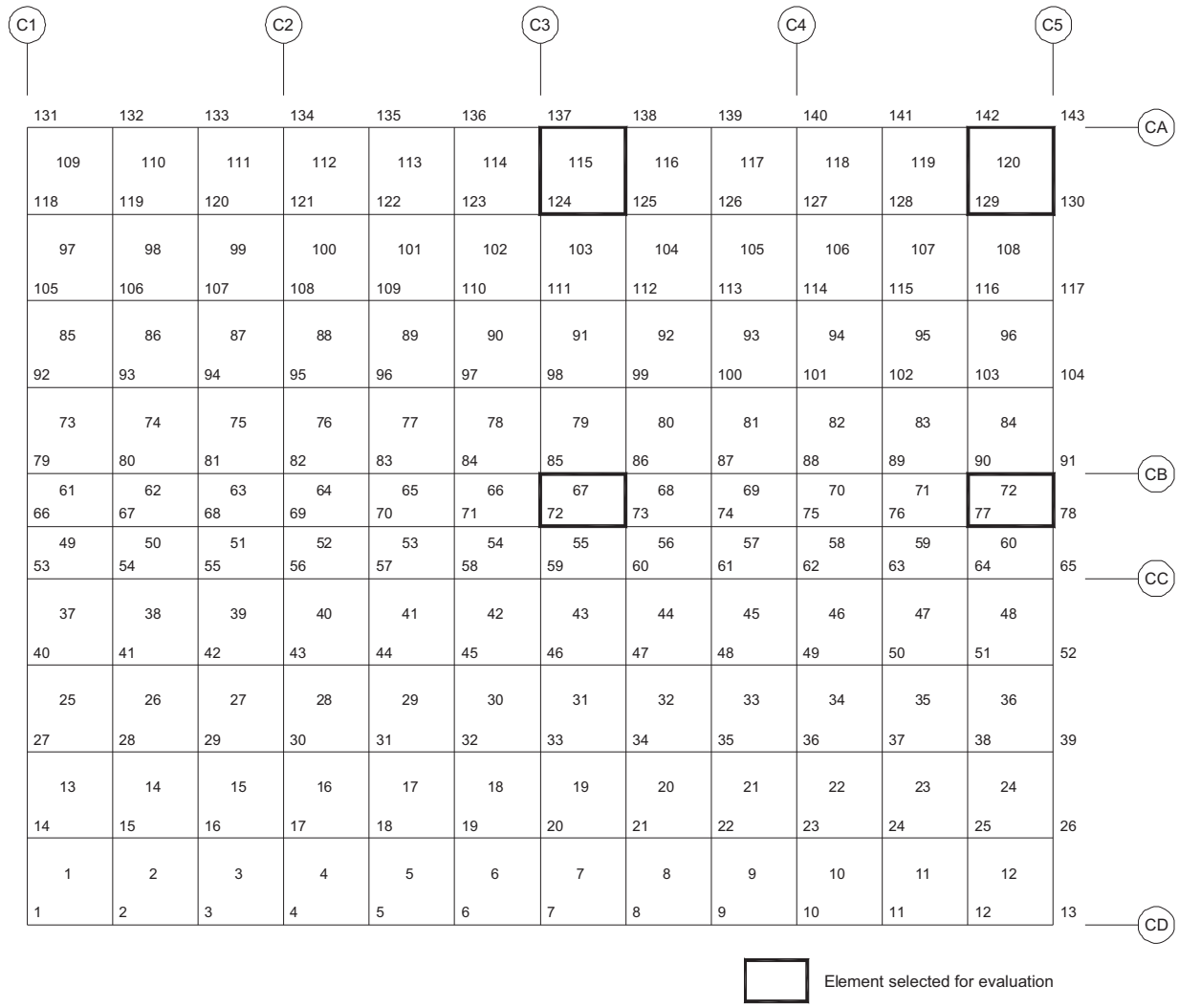


*Figure 3G.2-5. Finite Element Model of CB (Foundation Mat)*

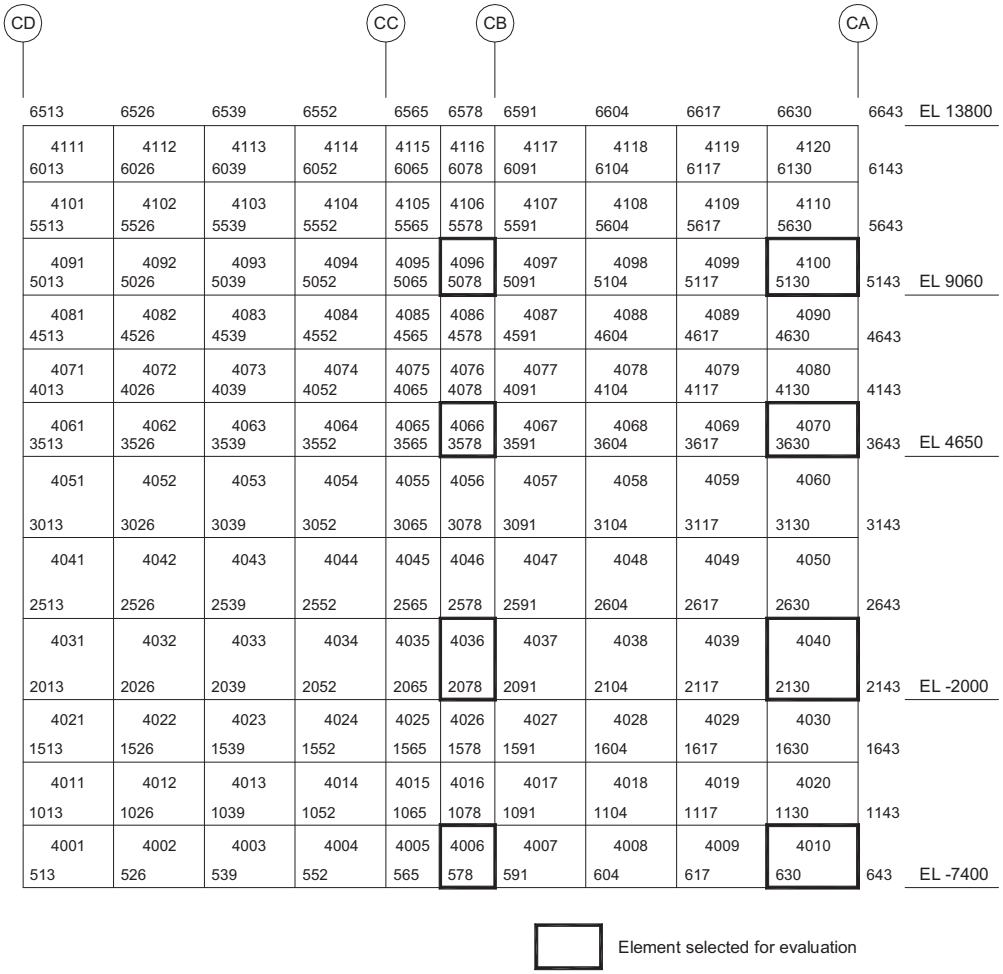


*Figure 3G.2-6. Finite Element Model of CB (External Wall: South Side)*

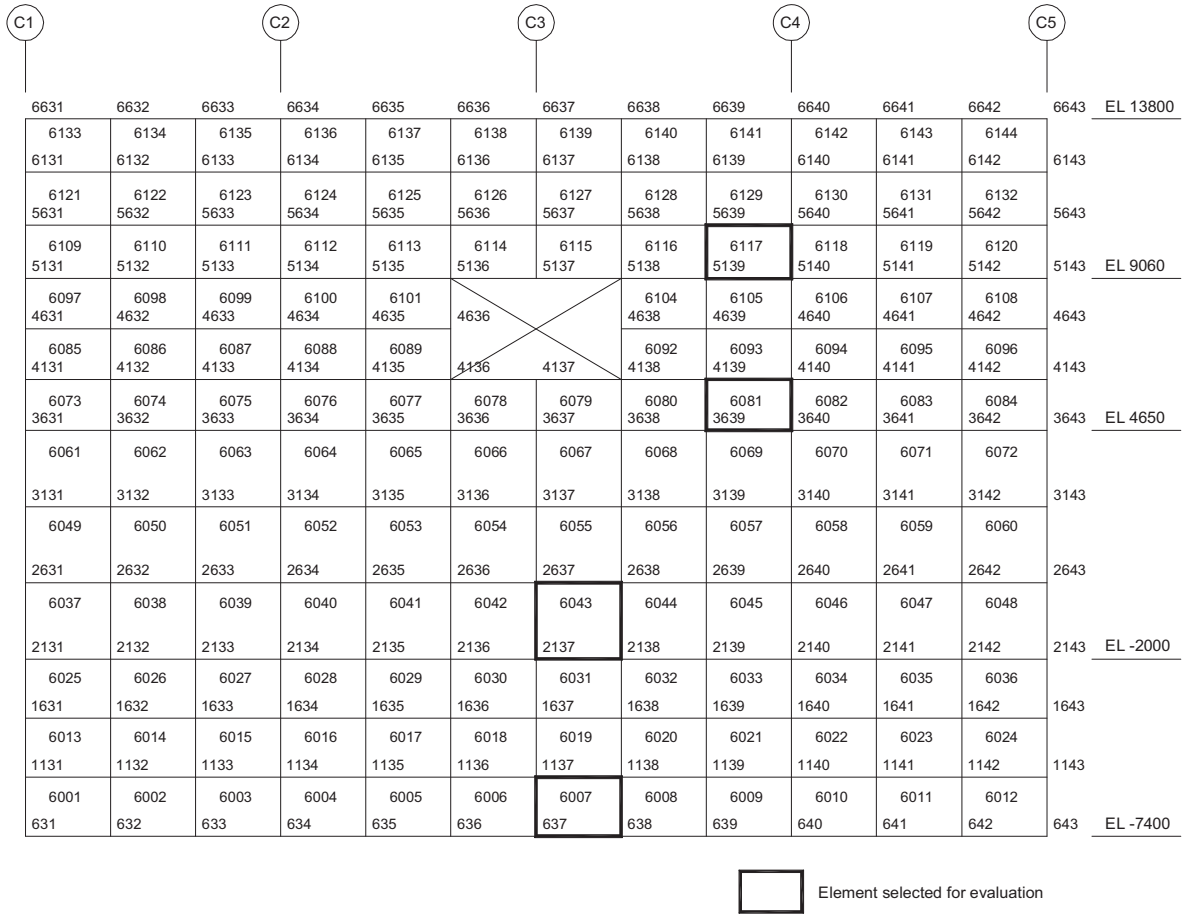


*Figure 3G.2-7. Finite Element Model of CB (External Wall: East Side)*

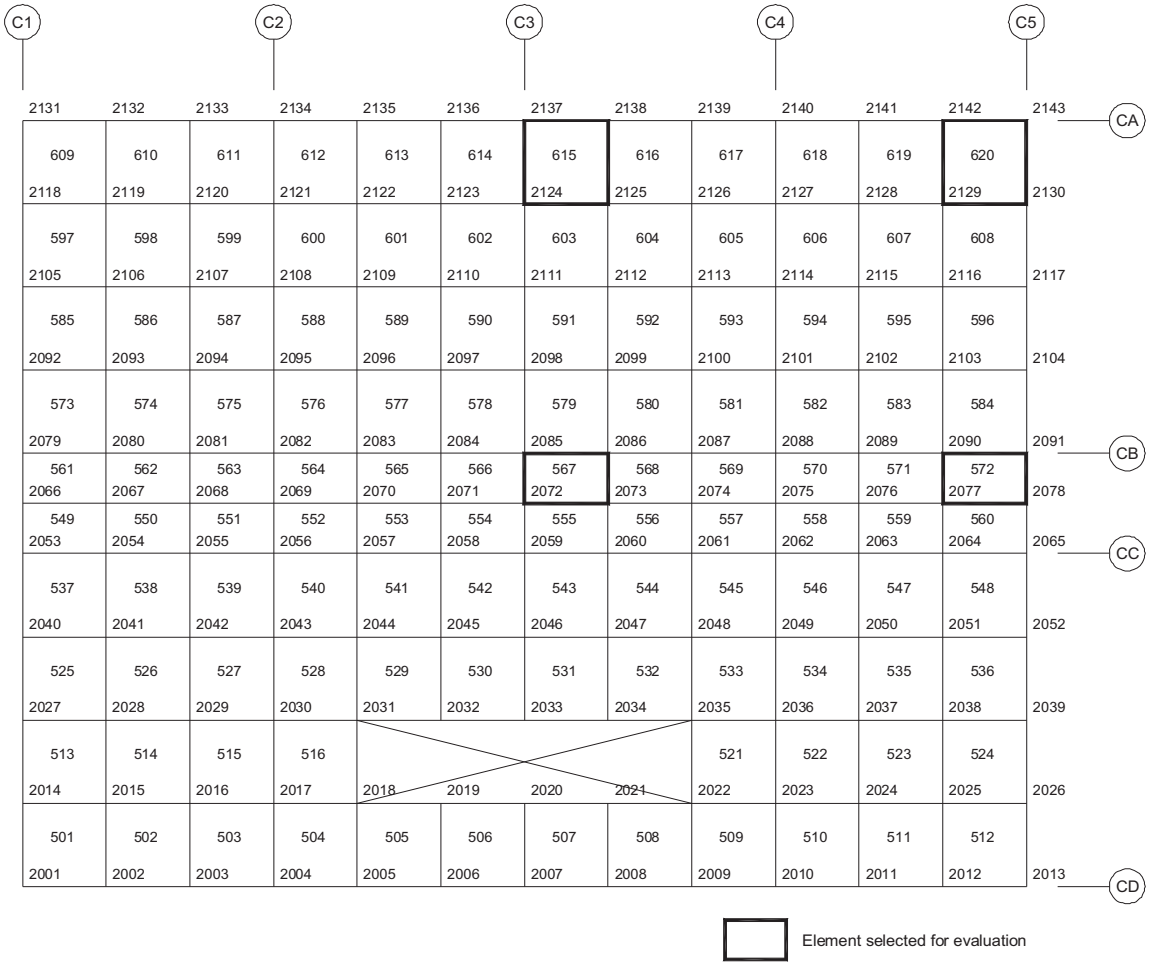


*Figure 3G.2-8. Finite Element Model of CB (Floor Slab: EL -2000)*

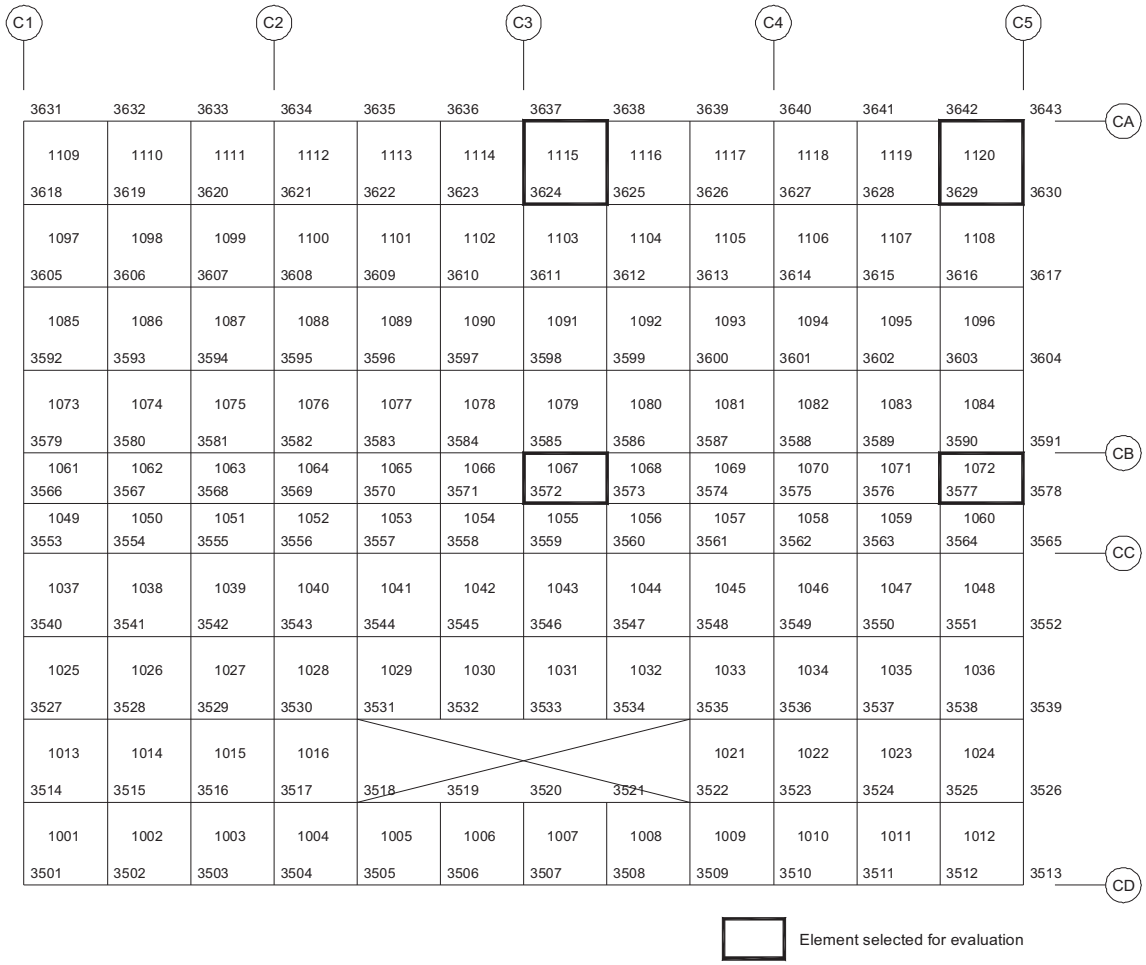


*Figure 3G.2-9. Finite Element Model of CB (Floor Slab: EL 4650)*

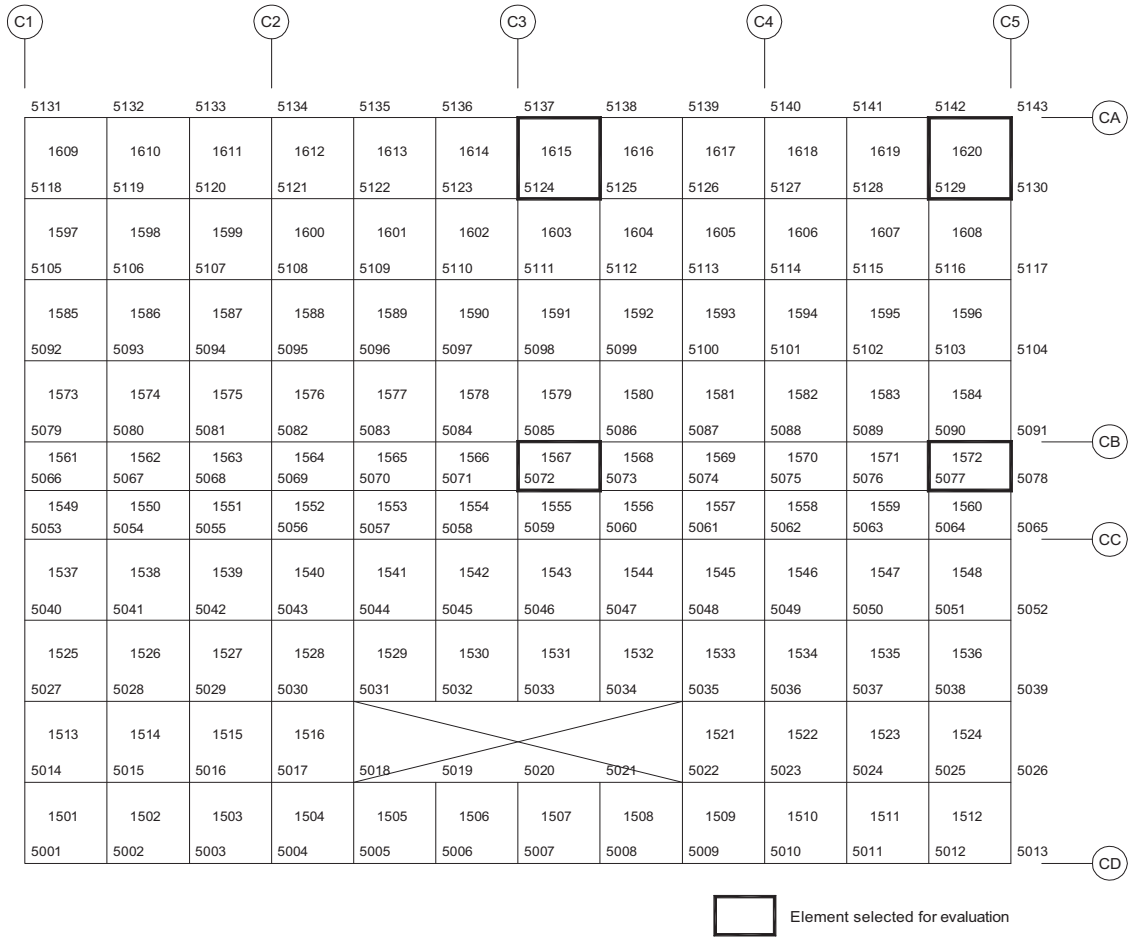


*Figure 3G.2-10. Finite Element Model of CB (Floor Slab: EL 9060)*

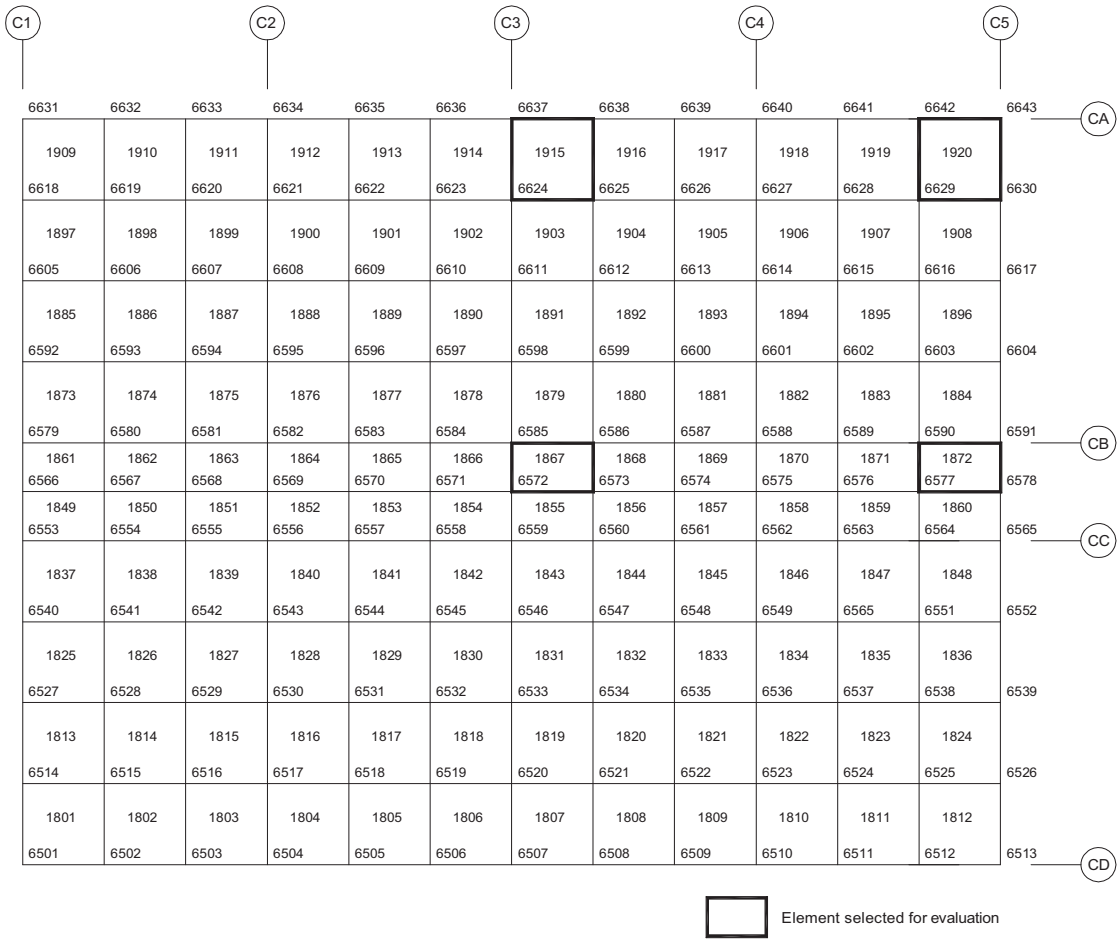


*Figure 3G.2-11. Finite Element Model of CB (Roof: EL 13800)*

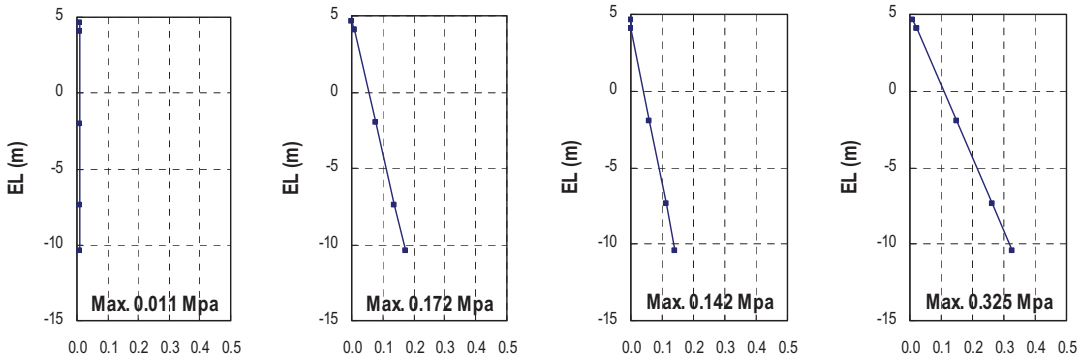


*Surcharge (MPa)* + *Soil Pressure (MPa)* + *Hydrostatic (MPa)* = *Total (MPa)*

*Pressure on Walls CA, CD & C1*

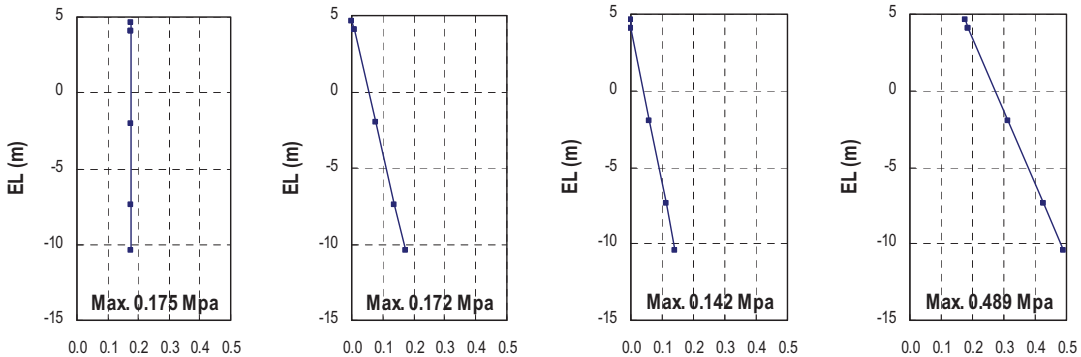


*Surcharge (MPa)* + *Soil Pressure (MPa)* + *Hydrostatic (MPa)* = *Total (MPa)*

*Pressure on Wall C5*

***Figure 3G.2-12. Soil Pressure at Rest***

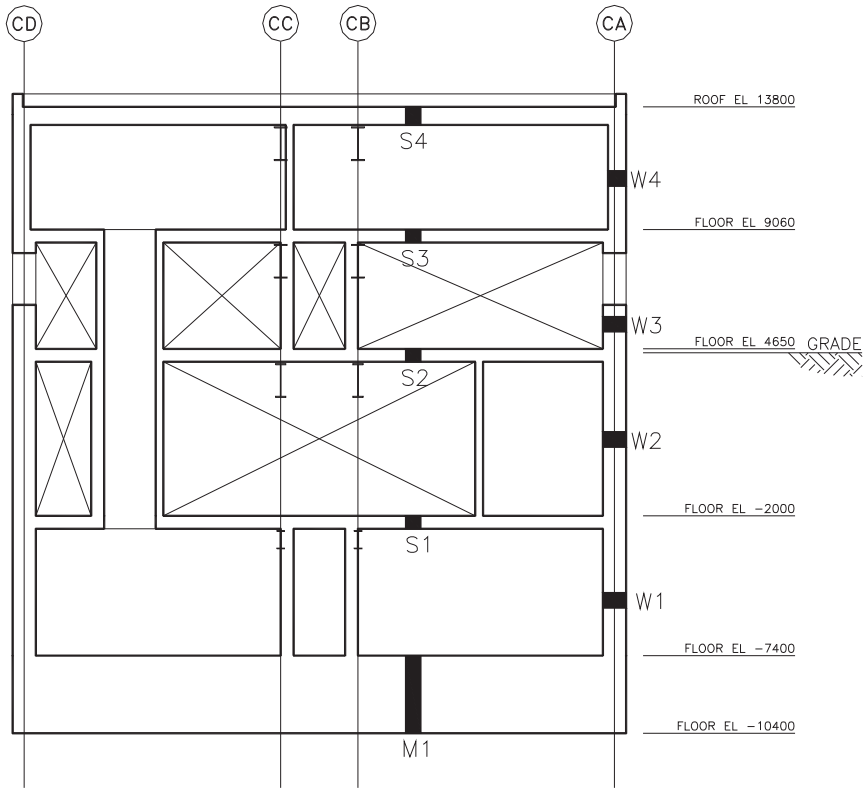


*Figure 3G.2-13. Sections Where Thermal Loads Are Defined*

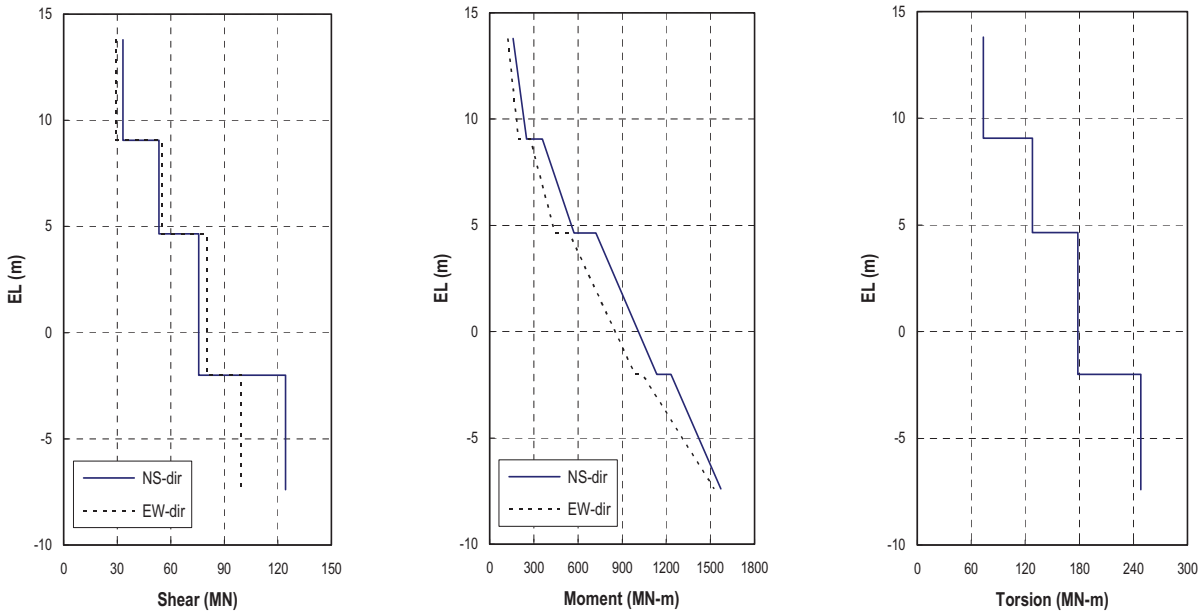


*Figure 3G.2-14. Design Seismic Shears and Moments for CB*

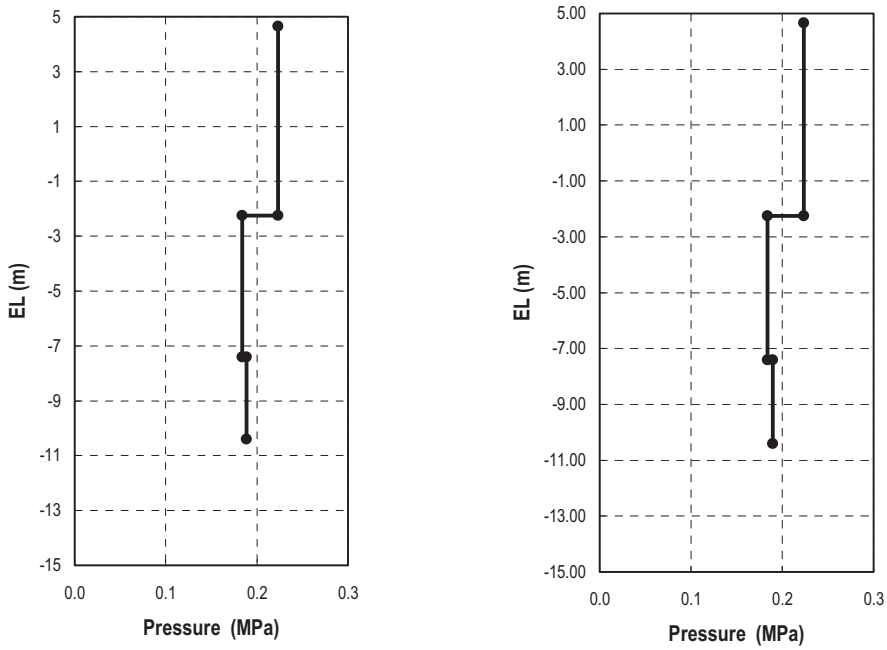


*C1 Wall and C5 Wall* *CA Wall and CD Wall*

***Figure 3G.2-15. Seismic Lateral Soil Pressure***

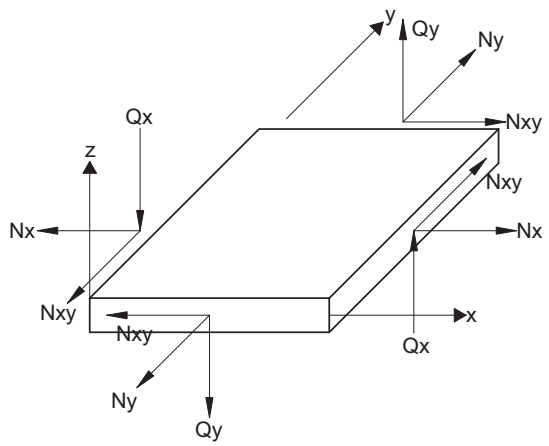


Membrane and Shear Forces

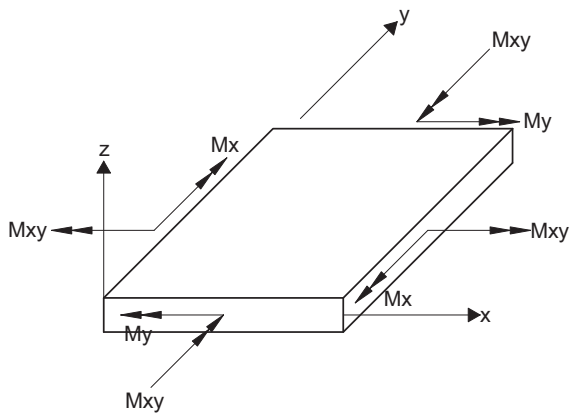


Moments

Definition of Element Coordinate System

| Structure | x | y | z |
|---|---|---|---|
| Wall in N-S Direction | horizontal | vertical | toward West |
| Wall in E-W Direction | horizontal | vertical | toward South |
| Foundation Mat<br>Floor Slab | toward South | toward East | upward |

***Figure 3G.2-16. Force and Moment in Shell Element***

***Figure 3G.2-17. Deleted***