Appendix 2.5DD Boring Logs, Monitoring Well Logs, Piezometer Logs, and Test Pit Logs

This appendix contains geotechnical boring logs that are the basis for discussion in Section 2.5. The logs are of soil and rock borings and represent a record of subsurface conditions at the Fermi 3 site.

Log Terminology and Symbols

See ASTM D2487 & D2488 for details on standard practice for description and identification of soils.

General

Date Started	- Date boring was started
Date Finished	- Date boring was completed to depth
SPT	- Split Spoon Sample / Standard Penetration Test
TW	- Thin Wall Sample
CA	- California Sample
S	- Sonic Sample
GP	- Geoprobe Sample
NSF	- National Sanitation Foundation
PP	- Pocket Penetrometer Readings
TV	- Torvane Readings
NQ	- Wireline Diamond Core Drill Bit Size
HQ	- Wireline Diamond Core Drill Bit Size
PQ	- Wireline Diamond Core Drill Bit Size
N Value	- Number of blows to drive a standard split spoon sampler 12 inches with a 140-pound weight falling 30 inches
RQD Recovery	- A modified core run recovery in which all pieces of sound core over 4 inches in length are summed
RQD	- The RQD Recovery expressed as a percentage of the total length of the core run
-------	- Approximate or gradational material change in classification column
@	- At
w/	- With
&	- And
WOR	- Weight of rods

WOH	-	Weight of hammer
ID	-	Inside diameter
OD	-	Outside diameter
NR	-	Not Recorded
Indurated	-	Rock hardened by heat, pressure, or cementation
Healed	-	Rock cemented by mineral precipitation, can be either induration or filling of fractures
Poorly Indurated	-	Rock that is not hardened into solid rock
Broken	-	Rock that is fractured and not recemented, sandy/gravelly in recovered core

Weathering

Fresh	-	Rock shows no dissolution, loss of strength, or other effects due to weathering (unweathered rock).
Slightly Weathered	-	Rock is slightly discolored with a slightly lower strength than unweathered rock.
Moderately Weathered	-	Rock is considerably discolored with a slightly lower strength than unweathered rock.
Highly Weathered	-	Rock is discolored and weakened so intensely that 2-inch diameter rock cores can be broken readily by hand. Wet strength is usually much lower than dry strength.

Bedding

Laminated	-	Less than 0.02 feet (0.25 inch)
Thin Bedded	-	0.21 to 0.5 feet (2.5 to 6 inches) in rock
Medium Bedded	-	0.5 to 1.0 foot (6 to 12 inches) in rock
Thick Bedded	-	1.0 to 2.0 feet (12 to 24 inches) in rock
Massive	-	Greater than 2.0 feet (24 inches) in rock
Parting	-	Less than 0.021 feet (less than 0.25 inch) in rock
Band(ed)	-	0.021 to 0.21 feet (0.25 to 2.5 inches) in rock
Intermingled	-	Two lithologies or material types that are mixed in a non-layered manner
Convoluted	-	Bedding that is wavy
Contorted	-	Bedding that is wavy and/or twisted
Nodule	-	Small rounded mass or lump of a mineral within a sedimentary sequence

Discontinuity

Angle in degrees	- Represents the angle in degrees measured from a plane perpendicular to the longitudinal axis of the sample
J, V, B	- Represents the type of the discontinuity [J = Joint, V = Vein, B = Bedding]
W, MW, N, VN, T	- Represents the aperture of the discontinuity [W = Wide (0.5 to 2.0 inches), MW = Moderately Wide (0.1 to 0.5 inches), N = Narrow (0.05 to 0.1 inches), VN = Very Narrow (<0.05 inches), T = Tight (0 inches)]
Cl, Ca, Ch, Fe, Gy, H, No, Qz, Sd, UK	- Represents the type of infilling in the discontinuity [Cl = Clay, Ca = Calcite, Ch = Chlorite, Fe = Iron Oxide, Gy = Gypsum/Talc, H = Healed, No = None, Qz = Quartz, Sd = Sand, UK = Unknown]
Su, Sp, Pa, Fi, No	- Represents the amount of infilling in the discontinuity [Su = Surface Stain, Sp = Spotty, Pa = Partially Filled, Fi = Filled, No = None]
WA, Pl, St, Ir	- Represents the planarity of the discontinuity [WA = Wavy, Pl = Planar, St = Stepped, Ir = Irregular]
Slk, S, SR, R, VR	- Represents the roughness of the surface of the discontinuity [Slk = Slickensided (surface has smooth, glassy finish with visual evidence of striations), S = Smooth (surface appears and feels smooth to the touch), SR = Slightly Rough (asperities on the discontinuity surfaces are distinguishable and can be felt), R = Rough (some ridges and side-angle steps are evident; asperities are clearly visible, and discontinuity surface feels very abrasive), VR = Very Rough (near-vertical steps and ridges occur on the discontinuity surface)]
Solutioned	- A chemical weathering process in which soluble minerals have been dissolved along a discontinuity. The fracture surface has rounded mineral particles and can be pitted. The rock surface may have a porous appearance. The walls of the fracture no longer match. The surface is discolored and may have evidence of water movement such as small rounded channels and grooves. The fracture surface and the rock mass are discolored and the degree of discoloration decreases away from the fracture. The discolored rock mass is softer than the fresh rock mass. The fracture opening may have clay infilling.

Symbols Legend


Sonic Sampler


Bulk/Discrete sample


Standard penetration test


Undisturbed thin walled tube


Rock core


Geoprobe


California sampler

The appendix contains the following logs:

Boring Logs

MW-381D
MW-381S
MW-383D
MW-383S
MW-384D
MW-384S
MW-386D
MW-386S
MW-387D
MW-387S
MW-388S
MW-390S
MW-391D
MW-391S
MW-391Sa
MW-393D
MW-393S
MW-395D
MW-395S
P-382S
P-385D
P-385S
P-389S
P-392S
P-396S
P-397S
P-398D
P-398S
P-399D
P-399P
CB-C1
CB-C2
CB-C3
CB-C4
CB-C5
CST-AB1
CT-E1
EB/TSC-C2
EB/TSC-E3
FO-E1
FWS/ACB-C1
FWS/ACB-C1a
HM-E1
PS-E1

RB-C1
RB-C2
RB-C3
RB-C4
RB-C4a
RB-C5
RB-C6
RB-C7
RB-C8
RB-C9
RB-C10
RB-C11
RB-C12
RW-C1
RW-C2
RW-C3
RW-C4
TB-C1
TB-C2
TB-C3
TB-C4
TB-C5
TB-C6
WT-E1

Monitoring Wells Logs

MW-381D
MW-381S
MW-383D
MW-383S
MW-384D
MW-384S
MW-386D
MW-386S
MW-387D
MW-387S
MW-388S
MW-390S
MW-391D
MW-391S
MW-393D
MW-393S
MW-395D
MW-395S

Piezometers Logs

P-382S
P-385D
P-385S
P-389S
P-392S
P-396S
P-397S
P-398D
P-398S
P-399D
CB-C5
EB/TSC-C2

Test Pit Logs

TP-1

BLACK & VEATCH

BORING LOG

BORING NO. MW-381D

SHEET 1 OF 7

CLIENT	PROJECT	PROJECT NO.
Detroit Edison	Fermi 3 COL Application	147483

PROJECT LOCATION	COORDINATES	GROUND ELEVATION (DATUM)	TOTAL DEPTH
Monroe, Michigan	N 5304.6' E 1843.0'	579.8 ft (NAVD 88)	99.0 (feet)

SURFACE CONDITIONS	COORDINATE SYSTEM	DATE START	DATE FINISHED
Grass covered area adjacent to woods	Plant	05/19/07	05/21/07

LOGGED BY	CHECKED BY	APPROVED BY
Grainger/Deeken	Dogbey/Meyer	Meyer

SAMPLING							CORING									
SAMPLE TYPE	SAMPLE NUMBER	SET 6 INCHES	2ND 6 INCHES	3RD 6 INCHES	N VALUE	SAMPLE RECOVERY	CORE SIZE	RUN NUMBER	RUN LENGTH	RUN RECOVERY	RQD RECOVERY	PERCENT RECOVERY	RQD	DEPTH (FEET)	ELEVATION (FEET)	CLASSIFICATION OF MATERIALS	REMARKS
														0	579	TOPSOIL	Boring advanced w/vacuum excavation.
														0.5		Lean CLAY (CL) - About 90% medium plasticity, medium toughness, no dilatancy, high dry strength fines; about 10% fine to coarse, subangular to rounded, hard sand; yellowish brown; hard; moist; strong reaction w/HCl; homogeneous; (Glacial Till).	
														1	578		
														2	577		
														3	576		
														4	575		
														5	574		Water encountered @ 5.5'
														6	573		Below 6.0' continued w/4¼" ID, 8" OD hollow stem auger. SPT performed w/D-50 automatic hammer.
SPT	1	3	9	15	24	1.3								7	572		
TW	2					0.3								8	571	grades w/some gravel, maximum size 2" @ 8.5'	
SPT	3	10	22	22	44	1.4								9	570	grades very hard, high toughness @ 9.5'	
SPT	4	16	17	10/0	27	0.5								10	569		
			12											11	568	11.5	Auger refusal @ 11.5'.
PQ	1	2.0	2.0	1.2	100	60								12	567	DOLOMITE; light gray; very fine grained; slightly weathered; strong; moderately hard; (Bass Islands Group).	Core box #1 starts @ 12.0'
			14.0											13	566	90°,J,N,Cl,Pa,Ir @ 12.0-12.8', 13.4-13.6'	Below 12' continued w/ triple tube wire line core barrel w/diamond bit using water as drilling fluid.
														14	565	2" clay band @ 13.4' joints healed from 12.6-13.6' 0°,B,N,Cl,Pa,Pl,SR @ 12.5', 13.4', 13.5', 13.6', 14.3', argillaceous @ 14.5-15.5'	
														15			

5/20/2008 1:51 PM DTE-Fermi 3

BLACK & VEATCH

BORING LOG

BORING NO. MW-381D

CLIENT	PROJECT	PROJECT NO.
Detroit Edison	Fermi 3 COL Application	147483

PROJECT LOCATION	COORDINATES	GROUND ELEVATION (DATUM)	TOTAL DEPTH
Monroe, Michigan	N 5304.6' E 1843.0'	579.8 ft (NAVD 88)	99.0 (feet)

SURFACE CONDITIONS	COORDINATE SYSTEM	DATE START	DATE FINISHED
Grass covered area adjacent to woods	Plant	05/19/07	05/21/07

LOGGED BY	CHECKED BY	APPROVED BY
GD for Grainger/Deeken GD.	Dogbey/Meyer EM	Meyer EM

SAMPLING							CORING									
SAMPLE TYPE	SAMPLE NUMBER	SET 6 INCHES	2ND 6 INCHES	3RD 6 INCHES	N VALUE	SAMPLE RECOVERY	CORE SIZE	RUN NUMBER	RUN LENGTH	RUN RECOVERY	RQD RECOVERY	PERCENT RECOVERY	RQD	DEPTH (FEET)	SAMPLE TYPE	ELEVATION (FEET)	GRAPHIC LOG	CLASSIFICATION OF MATERIALS	REMARKS
PQ	2							2	5.0	5.0	3.4	100	68	15				90°,J,VN,No,Pl,R @ 15.4-16.0'	
														16		564			
														17		563		fractured @ 16.8-17.3' 0°,B,N,Cl,Pa,Pl,SR @ 15.9', 16.8', 17.3', 17.6'	No drill water return @ 17.8'
														18		562			
																		90°,J,VN,No,Pl,R @ 18.4-19.6'	
										19.0				19		561			
																		0°,B,N,Cl,Pa,Pl,SR @ 19.4', 19.9'	
														20		560		90°,J,VN,No,Pl,R @ 20.2-21.2' 0°,B,N,Cl,Pa,Pl,SR @ 20.6', 20.8', 21.0' 80°,J,N,Cl,Pa,Pl,SR @ 21.3'	
PQ	3	5.0	5.0	2.3	100	46								21		559			
														22		558		0°,B,N,Cl,Pa,Pl,SR @ 21.7'	Core box #2 starts @ 21.7'
														23		557			
																		0°,B,N,Cl,Pa,Pl,SR @ 23.5'	
										24.0				24		556		0°,B,N,Cl,Pa,Pl,SR @ 24.0' 30°,J,N,Cl,Pa,Pl,SR @ 24.8', 25.2', 25.8'	
														25		555			
																		25.6'	
														26		554		DOLOMITE; argillaceous; very fine grained; moderately weathered; strong; moderately hard; thin bedded; (Bass Islands Group). highly fractured @ 25.8-26.4'	
PQ	4	5.0	5.0	2.1	100	42								27		553		30°,J,N,Cl,Pa,Pl,SR @ 26.4', 27.0', 27.5'	
														28		552		0°,B,N,Cl,Pa,Pl,SR @ 28.2'	
														29		551			
										29.0								vugs to ¾" @ 29.5'	
														30		550		30°,J,N,Cl,Pa,Pl,SR @ 30.0'	

BLACK & VEATCH

BORING LOG

BORING NO. MW-381D

CLIENT	PROJECT	PROJECT NO.
Detroit Edison	Fermi 3 COL Application	147483

PROJECT LOCATION	COORDINATES	GROUND ELEVATION (DATUM)	TOTAL DEPTH
Monroe, Michigan	N 5304.6' E 1843.0'	579.8 ft (NAVD 88)	99.0 (feet)

SURFACE CONDITIONS	COORDINATE SYSTEM	DATE START	DATE FINISHED
Grass covered area adjacent to woods	Plant	05/19/07	05/21/07

LOGGED BY	CHECKED BY	APPROVED BY
Grainger/Deeker	Dogbey/Meyer	Meyer

SAMPLING							CORING									
SAMPLE TYPE	SAMPLE NUMBER	SET 6 INCHES	2ND 6 INCHES	3RD 6 INCHES	N VALUE	SAMPLE RECOVERY	CORE SIZE	RUN NUMBER	RUN LENGTH	RUN RECOVERY	RQD RECOVERY	PERCENT RECOVERY	RQD	DEPTH (FEET)	SAMPLE TYPE	ELEVATION (FEET)	GRAPHIC LOG	CLASSIFICATION OF MATERIALS	REMARKS
														30				0°,J,N,Cl,Pa,Pl,SR @ 30.0' 30°,J,N,Cl,Pa,Pl,SR @ 30.7'	Core box #3 starts @ 30.0'
														31		549		0°,J,N,Cl,Pa,Pl,SR @ 31.2' 30°,J,N,Cl,Pa,Pl,SR @ 31.4' 0°,J,N,Cl,Pa,Pl,SR @ 31.6' 30°,J,N,Cl,Pa,Pl,SR @ 31.9'	
PQ	5	5.0	5.0	3.3	100	66								32		548		32.0 DOLOMITE; brecciated; gray/brown; very fine grained; moderately weathered; strong; hard; vugs to ½"; weak reaction w/HCl; (Bass Islands Group). ¼" thick black shale band @ 32.0'	
														33		547		0°,J,N,Cl,Pa,Pl,SR @ 33.5' 30°,J,N,Cl,Pa,Pl,SR @ 33.7'	
			34.0											34		546		34.0 DOLOMITE; light gray; very fine grained; moderately weathered; strong; hard; (Bass Islands Group). 90°,J,N,Cl,Sp,R @ 34.8-35.5'	
														35		545		30°,J,N,Cl,Pa,SR @ 35.5'	
														36		544			
PQ	6	5.0	5.0	2.9	100	58								37		543		0°,B,N,Cl,Pa,SR @ 36.8'	
														38		542		90°,J,N,Cl,Sp,R @ 37.6-38.2' 30°,J,N,Cl,Pa,SR @ 38.1'	
														39		541		0°,B,N,Cl,Pa,SR @ 38.8' 30°,J,N,Cl,Pa,SR @ 39.0'	Core box #4 starts @ 39.0'
			39.0											40		540		argillaceous @ 39.5' 0°,B,N,Cl,Pa,SR @ 39.8'	
														41		539		2" thick black shale band @ 41.0' 0°,B,N,Cl,Pa,SR @ 41.1' 30°,J,N,Cl,Pa,SR @ 41.2'	
PQ	7	5.0	5.0	3.5	100	70								42		538		41.2 DOLOMITE; oolitic; brown; fine grained; slightly weathered; strong; hard; (Bass Islands Group). 90°,J,N,Cl,Pa,Pl,SR @ 41.2-43.1'	
														43		537			
			44.0											44		536		90°,J,N,Cl,Pa,Pl,SR @ 43.8-44.1'	
														45		535		44.6 DOLOMITE; argillaceous; light gray; highly	

BLACK & VEATCH

BORING LOG

BORING NO. MW-381D

CLIENT	PROJECT	PROJECT NO.
Detroit Edison	Fermi 3 COL Application	147483

PROJECT LOCATION	COORDINATES	GROUND ELEVATION (DATUM)	TOTAL DEPTH
Monroe, Michigan	N 5304.6' E 1843.0'	579.8 ft (NAVD 88)	99.0 (feet)

SURFACE CONDITIONS	COORDINATE SYSTEM	DATE START	DATE FINISHED
Grass covered area adjacent to woods	Plant	05/19/07	05/21/07

LOGGED BY	CHECKED BY	APPROVED BY
GEO for Grainger/Deeken	EM for Dogbey/Meyer	EM Meyer

SAMPLING							CORING									
SAMPLE TYPE	SAMPLE NUMBER	SET 6 INCHES	2ND 6 INCHES	3RD 6 INCHES	N VALUE	SAMPLE RECOVERY	CORE SIZE	RUN NUMBER	RUN LENGTH	RUN RECOVERY	RQD RECOVERY	PERCENT RECOVERY	RQD	DEPTH (FEET)	SAMPLE TYPE	ELEVATION (FEET)	GRAPHIC LOG	CLASSIFICATION OF MATERIALS	REMARKS
														45				weathered; moderately strong; moderately hard; (Bass Islands Group).	
																534		0°,J,N,Cl,Pa,Pl @ 44.9'	
														46				2" black shale band @ 45.1'	
																		0°,J,N,Cl,Pa,Pl @ 45.5', 45.6', 45.7', 46.1', 46.5', 46.7'	
PQ	8	5.0	5.0	2.6	100	52										533		90°,J,N,Qz,Pa,Pl @ 46.7-48.1'(healed)	
														47				47.0	
																		DOLOMITE; gray; very fine grained; slightly weathered; strong; hard; (Bass Islands Group).	
																532		0°,J,N,Cl,Pa,Pl @ 48.0'	
														48					
																531			
			49.0											49				0°,B,N,Cl,Pa,Pl @ 49.1'	Core box #5 starts @ 49.0'
																530		10°,J,N,Cl,Pa,Pl @ 49.9'	
														50					
																529		10°,J,N,Cl,Pa,Pl @ 50.7'	
														51				0°,B,N,Cl,Pa,Pl @ 51.1'	
PQ	9	5.0	5.0	2.4	100	48												vugs to ½" @ 51.3-52.8'	
																528		10°,J,N,Cl,Pa,Pl @ 51.3'	
														52				0°,B,N,Cl,Pa,Pl @ 52.0'	
																		0°,B,N,Cl,Pa,Pl @ 52.5'	
																527		¼" black shale band @ 52.7'	
														53				highly fractured @ 53.0-54.1'	
																		10°,J,N,Cl,Pa,Pl @ 53.3', 53.4'	
																526			
			54.0											54					
																		90°,J,N,Cl,Pa,Pl @ 54.5-55.8'	
														55		525			
																524		10°,B,N,Cl,Sp,Pl @ 55.7'	
														56				10°,B,N,Cl,Sp,Pl @ 56.2', 56.4', 56.7'	
PQ	10	5.0	5.0	2.6	100	52										523			
														57					
																522		10°,B,N,Cl,Sp,Pl @ 57.7'	
														58					
																521			
			59.0											59					Core box #6 starts @ 59.0'
																		80°,J,N,H,Pa @ 59.2-60.2'	
																520		0°,B,N,No,No,Pl,R @ 59.5', 59.8'	
														60				highly fractured @ 59.5-59.9'	

BLACK & VEATCH

BORING LOG

BORING NO. MW-381D

CLIENT	PROJECT	PROJECT NO.
Detroit Edison	Fermi 3 COL Application	147483

PROJECT LOCATION	COORDINATES	GROUND ELEVATION (DATUM)	TOTAL DEPTH
Monroe, Michigan	N 5304.6' E 1843.0'	579.8 ft (NAVD 88)	99.0 (feet)

SURFACE CONDITIONS	COORDINATE SYSTEM	DATE START	DATE FINISHED
Grass covered area adjacent to woods	Plant	05/19/07	05/21/07

LOGGED BY	CHECKED BY	APPROVED BY
Grainger/Deeken	Dogbey/Meyer	Meyer

SAMPLING							CORING							DEPTH (FEET)	SAMPLE TYPE	ELEVATION (FEET)	GRAPHIC LOG	CLASSIFICATION OF MATERIALS	REMARKS
SAMPLE TYPE	SAMPLE NUMBER	SET 6 INCHES	2ND 6 INCHES	3RD 6 INCHES	N VALUE	SAMPLE RECOVERY	CORE SIZE	RUN NUMBER	RUN LENGTH	RUN RECOVERY	RQD RECOVERY	PERCENT RECOVERY	RQD						
														60				0°,B,N,No,No,Pl,R @ 60.4', 60.9'	
																519			
														61				0°,B,N,No,No,Pl,R @ 61.2'	
																		80°,J,N,H,Pa @ 61.5-62.0'	
							PQ	11	5.0	5.0	2.1	100	42			518			
														62				0°,B,N,No,No,Pl,R @ 62.0'	
																517			
														63				80°,J,N,H,Pa @ 62.3-63.0'	
																		highly fractured @ 63.4-63.9'	
																516		0°,B,N,No,No,Pl,R @ 63.4'-63.9'	
										64.0				64				½" black shale band @ 63.9'	
																		90°,J,N,Cl,Sp,Pl @ 64.1-66.0'	
																515		5°,B,N,Cl,Sp,Pl @ 64.5'	
														65				5°,B,N,Cl,Sp,Pl @ 65.3'	
																514		2" black shale band @ 67.5'	
														66					
							PQ	12	5.0	5.0	1.7	100	34			513			
														67				grades brown, pitted to ¼" @ 67.0'	
																		5°,B,N,Cl,Sp,Pl @ 67.2', 67.5'	
																512		highly fractured @ 67.5'-69.0'	
														68				90°,J,N,Cl,Sp,Pl @ 67.7-69.0'	
																511			
										69.0				69					Core box #7 starts @ 69.0'
																		5°,B,N,Cl,Su,Pl/Ir,Sr @ 69.5', 69.7'	
																510		65°,J,N,No,No,Pl @ 69.9'	
														70				5°,B,N,Cl,Su,Pl/Ir,Sr @ 70.2', 70.6'	
																509			
														71				1/8" black shale parting @ 71.1'	
							PQ	13	5.0	4.7	0.0	94	0					5°,B,N,Cl,Su,Pl/Ir,Sr @ 71.1'	
																508		highly fractured @ 71.2-73.0'	
														72				1/8" black shale parting @ 72.2'	
																507			
														73					
																		5°,B,N,Cl,Su,Pl/Ir,Sr @ 73.6'	
																506			
										74.0				74				grades brown, brecciated @ 74.0'	
																		75°,J,N,Cl,Su,Pl @ 74.3-75.4'	
																505		grades oolitic @ 74.5'	
														75					

BLACK & VEATCH

BORING LOG

BORING NO. MW-381D

CLIENT	PROJECT	PROJECT NO.
Detroit Edison	Fermi 3 COL Application	147483

PROJECT LOCATION	COORDINATES	GROUND ELEVATION (DATUM)	TOTAL DEPTH
Monroe, Michigan	N 5304.6' E 1843.0'	579.8 ft (NAVD 88)	99.0 (feet)

SURFACE CONDITIONS	COORDINATE SYSTEM	DATE START	DATE FINISHED
Grass covered area adjacent to woods	Plant	05/19/07	05/21/07

LOGGED BY	CHECKED BY	APPROVED BY
Grainger/Deeken	Dogbey/Meyer	Meyer

SAMPLING							CORING										
SAMPLE TYPE	SAMPLE NUMBER	SET 6 INCHES	2ND 6 INCHES	3RD 6 INCHES	N VALUE	SAMPLE RECOVERY	CORE SIZE	RUN NUMBER	RUN LENGTH	RUN RECOVERY	RQD RECOVERY	PERCENT RECOVERY	RQD	DEPTH (FEET)	SAMPLE TYPE	ELEVATION (FEET)	GRAPHIC LOG	CLASSIFICATION OF MATERIALS	REMARKS
														75				highly fractured @ 75.9-78.4'	
																504		75.9	
														76				DOLOMITE; argillaceous; light to dark gray; very fine grained; moderately weathered; moderately strong; moderately hard; (Bass Islands Group).	
PQ	14	5.0	5.0	1.0	100	20	PQ	14	5.0	5.0	1.0	100	20			503		90°,J,N,Cl,Su,Pl @ 76.1-77.5'	
														77				gray clay band @ 77.0-77.4'	
																502			
														78					
																501			
														79					Core box #8 starts @ 79.0'
										79.0						500		0°,B,N,Cl,Sp,Pl @ 79.3'	
														80				fissile @ 79.7-80.6'	
																499		0°,B,N,Cl,Sp,Pl @ 79.8'	
														81				0°,B,N,Cl,Sp,Pl @ 80.3', 80.6'	
PQ	15	5.0	5.0	3.1	100	62	PQ	15	5.0	5.0	3.1	100	62			498		0°,B,N,Cl,Sp,Pl @ 81.3', 81.4'	
														82				60°,J,N,Cl,Sp,Pl @ 81.8'	
																497		0°,B,N,Cl,Sp,Pl @ 82.8'	
														83					
																496			
										84.0				84				84.5	
																495		DOLOMITE; light gray; very fine grained; slightly weathered; strong; hard; (Bass Islands Group).	
														85				0°,B,N,Cl,Sp,Pl,SR @ 84.6'	
																494		0°,B,N,Cl,Sp,Pl,SR @ 85.2', 85.8'	
														86					
PQ	16	5.0	5.0	2.8	100	56	PQ	16	5.0	5.0	2.8	100	56			493		0°,B,N,Cl,Sp,Pl,SR @ 86.2'	
														87				0°,B,N,Cl,Sp,Pl,SR @ 86.9'	
																492			
														88				0°,B,N,Cl,Sp,Pl,SR @ 88.0', 88.1'	
																491		90°,J,VN,Cl,Su,Pl/Ir,Sr @ 88.7-88.9'	
										89.0				89				0°,B,N,Cl,Sp,Pl,SR @ 88.9'	Core box #9 starts @ 89.0'
																490			
														90				0°,B,N,Cl,Sp,Pl,SR @ 89.6'	

BLACK & VEATCH

BORING LOG

BORING NO. MW-381D
SHEET 7 OF 7

CLIENT	PROJECT	PROJECT NO.
Detroit Edison	Fermi 3 COL Application	147483

PROJECT LOCATION	COORDINATES	GROUND ELEVATION (DATUM)	TOTAL DEPTH
Monroe, Michigan	N 5304.6' E 1843.0'	579.8 ft (NAVD 88)	99.0 (feet)

SURFACE CONDITIONS	COORDINATE SYSTEM	DATE START	DATE FINISHED
Grass covered area adjacent to woods	Plant	05/19/07	05/21/07

LOGGED BY	CHECKED BY	APPROVED BY
Grainger/Deeker	Dogbey/Meyer	Meyer

SAMPLING: SAMPLE TYPE	SAMPLE NUMBER	SET 6 INCHES	2ND 6 INCHES	3RD 6 INCHES	N VALUE	SAMPLE RECOVERY

CORING: CORE SIZE	RUN NUMBER	RUN LENGTH	RUN RECOVERY	RQD RECOVERY	PERCENT RECOVERY	RQD
PQ	17	5.0	5.0	2.7	100	54
PQ	18	5.0	94.0 5.0	4.6	100	92

DEPTH (FEET)	SAMPLE TYPE	ELEVATION (FEET)	GRAPHIC LOG	CLASSIFICATION OF MATERIALS	REMARKS
90				90°,J,N,No,No,Pl,R @ 89.7-90.8' 0°,B,N,Cl,Sp,Pl,SR @ 90.2', 90.7'	
91		489			
				0°,B,N,Cl,Sp,Pl,SR @ 91.3'	
92		488			
				90°,J,N,No,No,Pl,R @ 92.3-93.1'	
93		487		highly fractured @ 92.8-93.1' 0°,B,N,Cl,Sp,Pl,SR @ 92.8', 92.9' 0°,B,N,Cl,Sp,Pl,SR @ 93.3'	
94		486		0°,J,MW,Qz Pa,Pl,R @ 94.0' 0°,B,N,Cl,Sp,Pl,SR @ 94.3'	
95		485		grades vuggy to ½" @ 95.0'	
96		484			
97		483			
				0°,J,MW,Qz Pa,Pl,R @ 97.5'	
98		482			
				0°,J,MW,Qz Pa,Pl,R @ 98.6'	
99		481			Bottom of boring @ 99.0'. Water level not recorded @ completion of drilling. Monitoring well installed 06/04/07.
100		480			
101		479			
102		478			
103		477			
104		476			
105		475			

BLACK & VEATCH

BORING LOG

BORING NO. MW-381S

SHEET 1 OF 1

CLIENT	PROJECT	PROJECT NO.
Detroit Edison	Fermi 3 COL Application	147483

PROJECT LOCATION	COORDINATES	GROUND ELEVATION (DATUM)	TOTAL DEPTH
Monroe, Michigan	N 5306.7' E 1838.4'	579.9 ft (NAVD 88)	9.5 (feet)

SURFACE CONDITIONS	COORDINATE SYSTEM	DATE START	DATE FINISHED
Grassy area next to Fermi Drive	Plant	05/19/07	05/29/07

LOGGED BY	CHECKED BY	APPROVED BY
GRO Ohlmacher/Deeken KU	Em for Dogbey	Em Meyer

SAMPLING: SAMPLE TYPE	SAMPLE NUMBER	SET 6 INCHES	2ND 6 INCHES	3RD 6 INCHES	N VALUE	SAMPLE RECOVERY
CORING: CORE SIZE	RUN NUMBER	RUN LENGTH	RUN RECOVERY	RQD RECOVERY	PERCENT RECOVERY	RQD

DEPTH (FEET)	SAMPLE TYPE	ELEVATION (FEET)	GRAPHIC LOG	CLASSIFICATION OF MATERIALS	REMARKS
0				Undifferentiated Overburden (see log for MW-381D)	Boring advanced w/vacuum excavation.
1		579			
2		578			
3		577			
4		576			
5		575			
6		574			Below 6.0' continued w/4¼" ID, 8" OD hollow stem augers.
7		573			
8		572			
9		571			
10		570			Bottom of boring @ 9.5'. Water level not recorded. Monitoring well installed on 05/29/07.
11		569			
12		568			
13		567			
14		566			
15		565			

6/10/2008 5:16 PM DTE-Fermi 3

BLACK & VEATCH

BORING LOG

BORING NO. MW-383D

CLIENT	PROJECT	PROJECT NO.
Detroit Edison	Fermi 3 COL Application	147483

PROJECT LOCATION	COORDINATES	GROUND ELEVATION (DATUM)	TOTAL DEPTH
Monroe, Michigan	N 5805.4' E 3435.7'	582.3 ft (NAVD 88)	101.0 (feet)

SURFACE CONDITIONS	COORDINATE SYSTEM	DATE START	DATE FINISHED
Grassy field	Plant	05/09/07	05/15/07

LOGGED BY	CHECKED BY	APPROVED BY
GCO Grainger/Ohlmacher	GCO Dogbey/Ohlmacher	EM Meyer

SAMPLING: SAMPLE TYPE	SAMPLE NUMBER	SET 6 INCHES	2ND 6 INCHES	3RD 6 INCHES	N VALUE	SAMPLE RECOVERY	CORING: CORE SIZE	RUN NUMBER	RUN LENGTH	RUN RECOVERY	RQD RECOVERY	PERCENT RECOVERY	RQD	DEPTH (FEET)	SAMPLE TYPE	ELEVATION (FEET)	GRAPHIC LOG	CLASSIFICATION OF MATERIALS	REMARKS
S	1					3.0				5.0				0		582		Lean CLAY (CL) - About 100% low plasticity, low toughness, no dilatancy, low dry strength fines; olive black; very soft; moist; no reaction w/HCl; homogeneous; (Topsoil-Fill).	Boring advanced w/4" ID sonic continuous sampler w/ nominal 6" temporary steel casing advanced w/sampler.
														1		581			
																		1.4	
														2		580		Lean CLAY (CL) - About 95% low plasticity, medium toughness; no dilatancy, medium to high dry strength fines; about 5% fine to coarse, subrounded, hard sand; dark yellowish brown; firm; moist; strong reaction w/ HCl; homogeneous; (Fill).	
														3		579			
														4		578			
														5		577			Discrete sample collected from S1 @ 4.6-5.0'.
S	2					4.3				10.0				6		576			
														7		575			
														8		574			Discrete sample collected from S2 @ 7.8-8.2'.
														9		573			
														10		572			
														11		571		1/4" thick layer of wood @ 11.6'	
																		11.7	
S	3					5								12		570		Lean CLAY (CL) - About 90% high plasticity, medium toughness, no dilatancy, high dry strength fines; about 10% fine, rounded, hard sand; medium gray; firm; moist; swampy odor; strong reaction w/HCl; homogeneous.	
														13		569			
																		11.9 PEAT (PT) - Grayish black; wet; fibrous, organic material.	
														14		568		12.3 Lean CLAY (CL) - About 100% medium plasticity, low toughness, no dilatancy, high dry strength fines; dark gray; firm; moist; swampy odor; strong reaction w/HCl;	Discrete sample collected from S3 @ 14.7-15.0'.
														15					

BLACK & VEATCH

BORING LOG

BORING NO. MW-383D

CLIENT	PROJECT	PROJECT NO.
Detroit Edison	Fermi 3 COL Application	147483

PROJECT LOCATION	COORDINATES	GROUND ELEVATION (DATUM)	TOTAL DEPTH
Monroe, Michigan	N 5805.4' E 3435.7'	582.3 ft (NAVD 88)	101.0 (feet)

SURFACE CONDITIONS	COORDINATE SYSTEM	DATE START	DATE FINISHED
Grassy field	Plant	05/09/07	05/15/07

LOGGED BY	CHECKED BY	APPROVED BY
GCO for Grainger/Ohlmacher GCC	GCO Dogbey/Ohlmacher	Meyer EM

SAMPLING: SAMPLE TYPE	SAMPLE NUMBER	SET 6 INCHES	2ND 6 INCHES	3RD 6 INCHES	N VALUE	SAMPLE RECOVERY	CORING: CORE SIZE	RUN NUMBER	RUN LENGTH	RUN RECOVERY	RQD RECOVERY	PERCENT RECOVERY	RQD	DEPTH (FEET)	SAMPLE TYPE	ELEVATION (FEET)	GRAPHIC LOG	CLASSIFICATION OF MATERIALS	REMARKS
										15.0				15		567		homogeneous; (Lacustrine Deposit).	
																		14.0	
S	4					5.0								16		566		Lean CLAY (CL) - About 95% low plasticity, high toughness, no dilatancy, medium to high dry strength fines; about 5% fine to coarse, subrounded, hard sand; yellowish brown & brownish yellow mottled; firm; moist; strong reaction w/HCl; lensed/laminated; (Glacial Till).	
														17		565			
														18		564			Discrete sample collected from S4 @ 17.7-18.1'.
																		18.5	
														19		563		Lean CLAY with Gravel (CL) - About 85% low plasticity, high toughness, no dilatancy, medium to high dry strength fines; about 10% fine to coarse, subrounded, hard gravel; about 5% fine to coarse sand; yellowish brown & brownish yellow mottled; firm; moist; strong reaction w/HCl; lensed/ laminated; (Glacial Till).	
										20.0				20		562			
																		21.0	
S	5					5.0								21		561		Lean CLAY with Sand (CL) - About 80% medium plasticity, medium toughness, no dilatancy, very high dry strength fines; about 10% fine to coarse, subrounded to angular, hard gravel; about 10% fine to coarse, rounded to angular sand; dark gray; very hard; moist; strong reaction w/HCl; homogeneous; (Glacial Till).	
														22		560			
														23		559			Discrete sample collected from S5 @ 22.8-23.2'.
																		24.0	
														24		558		Lean CLAY with Gravel (CL) - About 75% medium plasticity, medium toughness, no dilatancy, very high dry strength fines; about 15% fine to coarse, subrounded to angular, hard gravel; about 10% fine to coarse, rounded to angular sand; dark gray; very hard; moist; strong reaction w/HCl; homogeneous; (Glacial Till).	
										25.0				25		557			
S	6					NR								26		556			
																		27.0	
														27		555		DOLOMITE; vuggy; gray; micritic; slightly weathered; strong; moderately hard; banded; 10% vugs; close joints; (Bass Islands Group).	Sampling from 28.0-29.0' is unknown
														28		554			Set nominal 6" temporary steel casing to 28'.
										29.0				29		553		highly fractured @ 29.0-29.4'	Below 29' continued w/triple tube wire line core barrel w/
														30				15°,J,VN,T,No,No,St,R @ 29.7'	

BLACK & VEATCH

BORING LOG

BORING NO. MW-383D

CLIENT	PROJECT	PROJECT NO.
Detroit Edison	Fermi 3 COL Application	147483

PROJECT LOCATION	COORDINATES	GROUND ELEVATION (DATUM)	TOTAL DEPTH
Monroe, Michigan	N 5805.4' E 3435.7'	582.3 ft (NAVD 88)	101.0 (feet)

SURFACE CONDITIONS	COORDINATE SYSTEM	DATE START	DATE FINISHED
Grassy field	Plant	05/09/07	05/15/07

LOGGED BY	CHECKED BY	APPROVED BY
Grainger/Ohlmacher GCO	Dogbey/Ohlmacher GCO	Meyer EM

SAMPLING							CORING									
SAMPLE TYPE	SAMPLE NUMBER	SET 6 INCHES	2ND 6 INCHES	3RD 6 INCHES	N VALUE	SAMPLE RECOVERY	CORE SIZE	RUN NUMBER	RUN LENGTH	RUN RECOVERY	RQD RECOVERY	PERCENT RECOVERY	RQD	DEPTH (FEET)	SAMPLE TYPE	ELEVATION (FEET)	GRAPHIC LOG	CLASSIFICATION OF MATERIALS	REMARKS
PQ	1	2.0	1.8	0.7	90	35								30		552		highly fractured @ 30.0-30.1'	diamond bit using water as drilling fluid. Core box #1 starts @ 29.0'
			31.0											31		551		0°,J,W,No,No,Pl,R @ 31.3' calcite in vugs, partial filling @ 31.4-31.6'	
														32		550			
																		0°,J,VN,No,No,Pl,SR @ 32.6'	
PQ	2	5	5	4.8	100	96								33		549			
														34		548			
														35		547		0°,J,VN,No,No,Pl,SR @ 35.1' 0°,J,VN,No,No,Pl,R @ 35.4' brown weathering of dolomite near joint	about 35% drill water return around 35'
			36.0											36		546			
														37		545			
																		grades brownish gray @ 37.6'	
PQ	3	5	4.2	3.9	84	78								38		544		25°,J,VN,No,No,St,R @ 38.4-38.6'	Core box #2 starts @ 38.5'
														39		543		grades gray @ 39.1'	
														40		542		35°,J,VN,No,No,Pl,R @ 40.0-40.2' 60°,J,VN,Ca,Pa,Pl,SR @ 40.3-40.5'	No drill water return @ 40.0'
			41.0											41		541		dark gray shale partings @ 41.0-41.4' highly fractured @ 41.1-41.4'	
														42		540		highly fractured @ 41.8-41.9'	
														43		539		0°,J,T,No,No,St,SR @ 43.0' 90°,J,T,No,No,Pl,SR @ 43.1-46.0'	
PQ	4	5	5	2.4	100	48								44		538		0°,B,VN,No,No,Pl,S @ 43.7' highly fractured @ 44.1-44.7' grades mottled light gray-dark gray; dark gray is staining along tight fractures, no vugs @ 44.4'	
														45					

BLACK & VEATCH

BORING LOG

BORING NO. MW-383D

CLIENT	PROJECT	PROJECT NO.
Detroit Edison	Fermi 3 COL Application	147483

PROJECT LOCATION	COORDINATES	GROUND ELEVATION (DATUM)	TOTAL DEPTH
Monroe, Michigan	N 5805.4' E 3435.7'	582.3 ft (NAVD 88)	101.0 (feet)

SURFACE CONDITIONS	COORDINATE SYSTEM	DATE START	DATE FINISHED
Grassy field	Plant	05/09/07	05/15/07

LOGGED BY	CHECKED BY	APPROVED BY
GLO for Grainger/Ohlmacher	GLO for Dogbey/Ohlmacher	Meyer EM

SAMPLING							CORING									
SAMPLE TYPE	SAMPLE NUMBER	SET 6 INCHES	2ND 6 INCHES	3RD 6 INCHES	N VALUE	SAMPLE RECOVERY	CORE SIZE	RUN NUMBER	RUN LENGTH	RUN RECOVERY	RQD RECOVERY	PERCENT RECOVERY	RQD	DEPTH (FEET)	SAMPLE TYPE	ELEVATION (FEET)	GRAPHIC LOG	CLASSIFICATION OF MATERIALS	REMARKS
														45		537			Mechanically broken @ 45.5-46.0' when removed from the barrel
			46.0											46		536		0°,B,VN,No,No,Pl,SR @ 46.5'	
														47		535		fractured @ 46.9-47.0' grades banded gray, 10% vugs @ 47.0' 60°,J,T,No,No,Pl,SR @ 47.0-47.2'	
														48		534		0°,J,VN,No,No,Pl,SR @ 47.9'	Core box #3 starts @ 47.9'
PQ	5	5	5	4.6	100	92								49		533		shale parting - 0°,B,VN,Pl,SR @ 48.5'	
														50		532		10°,J,VN,No,No,Pl,SR @ 49.3' 90°,V,VN,Ca,Fi,Pl,SR @ 49.4-49.8	
			51.0											51		531		highly fractured @ 50.2-50.4'	Drill water return <25% @ about 50'
														52		530		highly fractured, loose fragments, no cementing @ 51.0-52.2'	
PQ	6	4	3.1	0	78	0								53		529		90°,J,VN,No,No,Pl,SR @ 52.1-54.1', 52.1-53.0' (2 parallel joints)	
														54		528		grades brownish gray, some fossil fragments & oolites @ 53. 3'	
			55.0											55		527		highly fractured w/calcite infill up to 0.5" thick @ 54.0-54.5' highly fractured; not cemented @ 54.5-54.8' grades gray, 10% vugs, no fossils, no oolites @ 54.8'	
PQ	7	1	1	1	100	100								56		526		10°,J,VN,No,No,Pl,SR @ 56.2'	
			56.0											57		525			
														58		524		10°,J,VN,No,No,Pl,SR @ 58.2'	Core box #4 starts @ 58.0'
PQ	8	5	4.9	3.3	98	66								59		523		90°,J,T,No,No,Pl,SR @ 58.5-59.8' highly fractured @ 58.7-59.1' 59.0 DOLOMITE; oolitic; brownish gray; very fine grained; slightly weathered; strong; moderately hard; banded;	
														60					

BLACK & VEATCH

BORING LOG

BORING NO. MW-383D

CLIENT	PROJECT	PROJECT NO.
Detroit Edison	Fermi 3 COL Application	147483

PROJECT LOCATION	COORDINATES	GROUND ELEVATION (DATUM)	TOTAL DEPTH
Monroe, Michigan	N 5805.4' E 3435.7'	582.3 ft (NAVD 88)	101.0 (feet)

SURFACE CONDITIONS	COORDINATE SYSTEM	DATE START	DATE FINISHED
Grassy field	Plant	05/09/07	05/15/07

LOGGED BY	CHECKED BY	APPROVED BY
GCO Grainger/Ohlmacher	GCO Dogbey/Ohlmacher	Meyer EM

SAMPLING							CORING									
SAMPLE TYPE	SAMPLE NUMBER	SET 6 INCHES	2ND 6 INCHES	3RD 6 INCHES	N VALUE	SAMPLE RECOVERY	CORE SIZE	RUN NUMBER	RUN LENGTH	RUN RECOVERY	RQD RECOVERY	PERCENT RECOVERY	RQD	DEPTH (FEET)	SAMPLE TYPE	ELEVATION (FEET)	GRAPHIC LOG	CLASSIFICATION OF MATERIALS	REMARKS
														60		522		30% vugs; porous; (Bass Islands Group). J,T,No,No,PI,SR @ 60.5-61.0'	
			61.0											61		521		60°,J,T,No,No,PI,SR @ 61.0-61.5'	
PQ	9	5	5	3.3	100	66								62		520		61.6 DOLOMITE; gray; very fine grained; slightly weathered; strong; moderately hard; banded; 10% vugs; (Bass Islands Group). highly fractured @ 62.0-62.3' grades 0% vugs @ 62.3' 25°,J,VN,No,No,PI,SR @ 62.6' 20°,J,VN,No,No,WA,SR @ 63.3'	
														63		519			
														64		518		highly fractured @ 64.0-64.2'	
														65		517		10°,J,T,No,No,PI,S @ 64.6 J,T,No,No,PI,SR @ 64.9-65.6' 40°,J,T,No,No,PI,SR @ 65.3-65.7' (2 joints)	
			66.0											66		516			
														67		515		highly fractured @ 66.7-66.9'	Core box #5 starts @ 66.9'
PQ	10	5	4.0	1.5	80	30								68		514		0°,B,VN,No,No,PI,SR @ 67.3' 0°,B,VN,No,No,PI,SR @ 67.7' highly fractured, loose gravel @ 67.8-69.9'	
														69		513			Driller reported soft (clay) material
														70		512		80°,J,T,No,No,PI,SR @ 69.7-70.5' 80°,J,T,No,No,PI,SR @ 70.2-70.5'	
			71.0											71		511		highly fractured @ 71.0-71.1' highly fractured, loose gravel @ 71.3-71.6'	
														72		510		15°,J,T,No,No,PI,R @ 72.1' 80°,J,T,No,No,PI,SR @ 72.3-73.0' highly fractured: loose gravel @ 72.4-72.5'	
PQ	11	5	4.8	3.7	96	74								73		509		grades about 10% vugs @ 73.1' grades brecciated, indurated, tan-gray, strong, lots of stylolites @ 73.3'	
														74		508		highly fractured, loose gravel @ 73.4-73.6' 25°,J,T,No,PI,SR @ 74.3'	
														75					

BLACK & VEATCH

BORING LOG

BORING NO. MW-383D

CLIENT	PROJECT	PROJECT NO.
Detroit Edison	Fermi 3 COL Application	147483

PROJECT LOCATION	COORDINATES	GROUND ELEVATION (DATUM)	TOTAL DEPTH
Monroe, Michigan	N 5805.4' E 3435.7'	582.3 ft (NAVD 88)	101.0 (feet)

SURFACE CONDITIONS	COORDINATE SYSTEM	DATE START	DATE FINISHED
Grassy field	Plant	05/09/07	05/15/07

LOGGED BY	CHECKED BY	APPROVED BY
Grainger/Ohlmacher GCO	Dogbey/Ohlmacher GCO	Meyer EM

SAMPLING							CORING									
SAMPLE TYPE	SAMPLE NUMBER	SET 6 INCHES	2ND 6 INCHES	3RD 6 INCHES	N VALUE	SAMPLE RECOVERY	CORE SIZE	RUN NUMBER	RUN LENGTH	RUN RECOVERY	RQD RECOVERY	PERCENT RECOVERY	RQD	DEPTH (FEET)	SAMPLE TYPE	ELEVATION (FEET)	GRAPHIC LOG	CLASSIFICATION OF MATERIALS	REMARKS
														75		507		0°,J,T,No,No,Pl,R,joint along stylolite @ 75.1'	
			76.0											76		506			
														77		505			Core box #6 starts @ 77.3'
														78		504			
PQ	12	5	5.0	5	100	100	PQ	12	5	5.0	5	100	100	79		503		highly fractured, loose @ 78.5-78.6'	
														80		502		15°,J,T,No,No,Pl,SR, joint along stylolite @ 79.6' grades gray, no breccia, no vugs @ 79.9' 20°,J,VN,No,No,Pl,R @ 80.0' 0°,B,T,No,No,Pl,S @ 80.4', 80.8', 81.3', 81.5'	
			81.0											81		501			
														82		500		highly fractured, very close spacing, loose; @ 81.8-85.6'	
														83		499		90°,J,T,No,No,Pl,SR @ 82.6-84.0', 84.4-85.3'	
PQ	13	5	4.4	0.0	88	0	PQ	13	5	4.4	0.0	88	0	84		498			
														85		497		85.2 SHALE; dark gray to black; slightly weathered; weak; moderately hard; (Bass Islands Group).	
														86		496		85.6 DOLOMITE; gray; very fine grained; slightly weathered; strong; moderately hard; banded; (Bass Islands Group). 90°,J,T,No,No,Pl,SR @ 85.6-86.0, 86.0-86.6' highly fractured, very close spacing to gravel like @ 86.0-87.9' 20°,J,T,No,No,Pl,S @ 86.9' 50°,J,T,No,No,Pl,SR @ 87.0-87.3', 87.7-88.0' 10°,J,VN,Pl,SR @ 87.7'	
			86.0											87		495			Core box #7 starts @ 87.7'
														88		494			
PQ	14	5	5.0	2.0	100	40	PQ	14	5	5.0	2.0	100	40	89		493		30°,J,T,No,No,Ir,R @ 88.4-88.6' 30°,J,T,No,No,Ir,R @ 89.0-89.3'	
														90				15°,J,T,Cl,Pa,Pl,S @ 89.8'	

BLACK & VEATCH

BORING LOG

BORING NO. MW-383D

CLIENT	PROJECT	PROJECT NO.
Detroit Edison	Fermi 3 COL Application	147483

PROJECT LOCATION	COORDINATES	GROUND ELEVATION (DATUM)	TOTAL DEPTH
Monroe, Michigan	N 5805.4' E 3435.7'	582.3 ft (NAVD 88)	101.0 (feet)

SURFACE CONDITIONS	COORDINATE SYSTEM	DATE START	DATE FINISHED
Grassy field	Plant	05/09/07	05/15/07

LOGGED BY	CHECKED BY	APPROVED BY
Grainger/Ohlmacher	Dogbey/Ohlmacher	Meyer

SAMPLING: SAMPLE TYPE	SAMPLE NUMBER	SET 6 INCHES	2ND 6 INCHES	3RD 6 INCHES	N VALUE	SAMPLE RECOVERY	CORING: CORE SIZE	RUN NUMBER	RUN LENGTH	RUN RECOVERY	RQD RECOVERY	PERCENT RECOVERY	RQD	DEPTH (FEET)	SAMPLE TYPE	ELEVATION (FEET)	GRAPHIC LOG	CLASSIFICATION OF MATERIALS	REMARKS
														90		492		15°,J,T,Cl,Pa,Pl,S @ 90.1' highly fractured, very close spacing; loose @ 90.4-91.0'	
										91.0				91		491		50°,J,T,No,No,Pl,SR @ 91.1-91.6' highly fractured, very close spacing @ 91.3-91.6' 90°,J,T,No,No,Pl,SR @ 91.6-91.9' 0°,B,VN,No,No,Pl,S @ 91.9'	
														92		490		grades gradual increase to 10% vugs @ 91.9-92.2' grades 0% vugs @ 92.2' 0°,B,VN,No,No,Pl,S @ 92.3'	
PQ	15	5		5.0	2.2	100	44							93		489		90°,J,T,No,No,Pl,SR @ 92.6-93.0' 10°,J,VN,No,No,Pl,SR @ 93.0' 0°,B,No,No,Pl,SR @ 93.3', 93.4' fractured @ 93.3-93.4'	
														94		488		10°,J,T,No,No,Pl,SR @ 93.8'	
														95		487		highly fractured, loose @ 94.9-95.1' 0°,B,No,No,Pl,SR @ 95.3', 95.6' (2 parallel joints), 95.8'	
										96.0				96		486		0°,B,No,No,Pl,SR @ 96.3', 96.5'	
PQ	16	2.5		2.5	1.3	100	52							97		485		90°,J,T,No,No,Pl,SR @ 96.5-98.2' highly fractured, loose @ 96.8-97.0' highly fractured, very close spacing, loose @ 97.2-97.6'	Core box #8 starts @ 96.8'
														98		484		90°,J,T,No,No,Pl,SR @ 98.2-98.5'	
										98.5				99		483		highly fractured, gravel like @ 98.5-98.8' 90°,J,T,No,No,Pl,SR @ 98.8-100.2'	
PQ	17	2.5		2.0	0.0	80	0							100		482		fractured, loose @ 100.2-100.4'	
														101		481			Bottom of boring @ 101'. Water level @ 15.6' @ completion of drilling. Monitoring well installed on 05/31/07.
														102		480			
														103		479			
														104		478			
														105					

BLACK & VEATCH

BORING LOG

BORING NO. MW-383S

SHEET 1 OF 2

CLIENT	PROJECT	PROJECT NO.
Detroit Edison	Fermi 3 COL Application	147483

PROJECT LOCATION	COORDINATES	GROUND ELEVATION (DATUM)	TOTAL DEPTH
Monroe, Michigan	N 5809.1' E 3432.7'	582.4 ft (NAVD 88)	16.5 (feet)

SURFACE CONDITIONS	COORDINATE SYSTEM	DATE START	DATE FINISHED
Grassy field	Plant	05/16/07	05/16/07

LOGGED BY	CHECKED BY	APPROVED BY
Ohlmacher (GCO)	Meyer EM	Meyer EM

SAMPLING							CORING									
SAMPLE TYPE	SAMPLE NUMBER	SET 6 INCHES	2ND 6 INCHES	3RD 6 INCHES	N VALUE	SAMPLE RECOVERY	CORE SIZE	RUN NUMBER	RUN LENGTH	RUN RECOVERY	RQD RECOVERY	PERCENT RECOVERY	RQD	DEPTH (FEET)	SAMPLE TYPE	ELEVATION (FEET)	GRAPHIC LOG	CLASSIFICATION OF MATERIALS	REMARKS
SPT	1	3	3	3	6	1								0		582		Sandy Lean Clay (CL) - About 70% medium plasticity, medium toughness, slow dilatancy, medium dry strength fines; about 20% fine to coarse, subrounded to angular sand; about 10% fine to coarse, subrounded to angular gravel, fractured w/1 hammer blow; brown; firm; moist; strong reaction w/HCl; homogeneous; (Fill).	Boring advanced w/4¼" ID, 8" OD hollow stem augers. SPT performed w/D-50 automatic hammer.
														1		581			
														2		580			
														3		579			
														4		578			
														5		577			
SPT	2	3	4	3	7	0								6		576			
														7		575			
														8		574			
														9		573			
														10		572			Gravel blocked split-spoon for SPT-3.
SPT	3	5	4	4	8	0.2								11		571			
														12		570			Gravel blocked split-spoon for SPT-4.
SPT	4	2	3	3	6	0.3								13		569		—13.0— Lean CLAY (CL) - About 100% medium plasticity, medium toughness, no dilatancy fines; gray to brown; firm; moist; no reaction w/HCl; homogeneous; (Glacial Till).	
SPT	5	WOH	3	3	6	1.5								14		568			
														15					

5/27/2008 5:32 PM DTE-Fermi 3

BLACK & VEATCH

BORING LOG

BORING NO. MW-383S

CLIENT	PROJECT	PROJECT NO.
Detroit Edison	Fermi 3 COL Application	147483

PROJECT LOCATION	COORDINATES	GROUND ELEVATION (DATUM)	TOTAL DEPTH
Monroe, Michigan	N 5809.1' E 3432.7'	582.4 ft (NAVD 88)	16.5 (feet)

SURFACE CONDITIONS	COORDINATE SYSTEM	DATE START	DATE FINISHED
Grassy field	Plant	05/16/07	05/16/07

LOGGED BY	CHECKED BY	APPROVED BY
Ohlmacher GCO	Meyer EM	Meyer EM

SAMPLING							CORING									
SAMPLE TYPE	SAMPLE NUMBER	SET 6 INCHES	2ND 6 INCHES	3RD 6 INCHES	N VALUE	SAMPLE RECOVERY	CORE SIZE	RUN NUMBER	RUN LENGTH	RUN RECOVERY	RQD RECOVERY	PERCENT RECOVERY	RQD	DEPTH (FEET)	SAMPLE TYPE	ELEVATION (FEET)	GRAPHIC LOG	CLASSIFICATION OF MATERIALS	REMARKS
TW	6					1.7								15		567		15.5	PP=2.7 TSF TV=0.75 TSF
														16		566		Lean CLAY with Sand (CL) - About 85% medium plasticity, medium toughness, no dilatancy fines; about 15% fine to coarse, subrounded to angular sand; gray to brown; firm; moist; strong reaction w/HCl; homogeneous; (Glacial Till).	Bottom of boring @ 16.5'. Water level not recorded. Monitoring well installed on 05/16/07.
														17		565			
														18		564			
														19		563			
														20		562			
														21		561			
														22		560			
														23		559			
														24		558			
														25		557			
														26		556			
														27		555			
														28		554			
														29		553			
														30					

BLACK & VEATCH

BORING LOG

BORING NO. MW-384D

SHEET 1 OF 7

CLIENT	PROJECT	PROJECT NO.
Detroit Edison	Fermi 3 COL Application	147483

PROJECT LOCATION	COORDINATES	GROUND ELEVATION (DATUM)	TOTAL DEPTH
Monroe, Michigan	N 5537.6' E 4402.8'	581.3 ft (NAVD 88)	101.0 (feet)

SURFACE CONDITIONS	COORDINATE SYSTEM	DATE START	DATE FINISHED
Grassy area behind berm from railroad tracks	Plant	05/09/07	05/17/07

LOGGED BY	CHECKED BY	APPROVED BY
Grainger/Ohlmacher	Dogbey/Ohlmacher	Meyer

SAMPLING							CORING									
SAMPLE TYPE	SAMPLE NUMBER	SET 6 INCHES	2ND 6 INCHES	3RD 6 INCHES	N VALUE	SAMPLE RECOVERY	CORE SIZE	RUN NUMBER	RUN LENGTH	RUN RECOVERY	RQD RECOVERY	PERCENT RECOVERY	RQD	DEPTH (FEET)	SAMPLE TYPE	ELEVATION (FEET)	GRAPHIC LOG	CLASSIFICATION OF MATERIALS	REMARKS
S	1					3.8								0		581		ORGANIC Soil (OL/OH) - About 90% fines; about 10% fine organics; very dark brown; (Fill).	Boring advanced w/4" ID sonic continuous sampler w/ nominal 6" temporary steel casing advanced w/sampler.
														1		580			
														1.8				Poorly graded SAND with Silt (SP-SM) - About 90% fine sand; about 10% non-plastic, low toughness, no dilatancy, no dry strength fines; very dark brown; very soft; moist; strong reaction w/HCl; laminated; (Fill).	
														2		579			
														3		578		Poorly graded GRAVEL with Sand (GP) - About 80% fine to coarse, angular, hard gravel; about 20% fine to coarse, angular, hard sand; light brownish gray; moist; strong reaction w/HCl; homogeneous; (Fill).	
														4		577			
														5		576			
S	2		5.0			4.4								6		575		Lean CLAY with Sand (CL) - About 85% medium plasticity, medium toughness, no dilatancy, high dry strength fines; about 10% fine to coarse, subrounded sand; about 5% fine to coarse, rounded gravel; dark grayish brown; firm; moist; homogeneous; (Fill).	
														6.0					
														7		574			
														8		573			
														9		572			
S	3		10.0			3.0								10		571			
														11		570			
														12		569			
														13		568			
														14		567			
														15					

6/17/2008 11:44 AM DTE-Fermi 3

BLACK & VEATCH

BORING LOG

BORING NO. MW-384D

CLIENT	PROJECT	PROJECT NO.
Detroit Edison	Fermi 3 COL Application	147483

PROJECT LOCATION	COORDINATES	GROUND ELEVATION (DATUM)	TOTAL DEPTH
Monroe, Michigan	N 5537.6' E 4402.8'	581.3 ft (NAVD 88)	101.0 (feet)

SURFACE CONDITIONS	COORDINATE SYSTEM	DATE START	DATE FINISHED
Grassy area behind berm from railroad tracks	Plant	05/09/07	05/17/07

LOGGED BY	CHECKED BY	APPROVED BY
Grainger/Ohlmacher	Dogbey/Ohlmacher	Meyer

SAMPLING							CORING									
SAMPLE TYPE	SAMPLE NUMBER	SET 6 INCHES	2ND 6 INCHES	3RD 6 INCHES	N VALUE	SAMPLE RECOVERY	CORE SIZE	RUN NUMBER	RUN LENGTH	RUN RECOVERY	RQD RECOVERY	PERCENT RECOVERY	RQD	DEPTH (FEET)	SAMPLE TYPE	ELEVATION (FEET)	GRAPHIC LOG	CLASSIFICATION OF MATERIALS	REMARKS
S	4					4.7				15.0				15		566		15.0 Lean CLAY (CL) - About 100% medium plasticity, medium toughness, no dilatancy, high dry strength fines; very dark gray; very soft; moist; no reaction w/ HCl; homogeneous; (Lacustrine Deposit).	
														16		565		16.0 Lean CLAY with Sand (CL) - About 80% medium plasticity, low toughness, no dilatancy, high dry strength fines; about 15% fine to coarse, rounded, hard sand; about 5% fine to coarse, rounded to subrounded, hard gravel; dark grayish brown & gray; mottled; hard; moist; laminated; (Glacial Till).	
														17		564			
														18		563			
														19		562			
S	5					5.0				20.0				20		561			
														21		560		21.3 Elastic SILT with Sand (MH) - About 75% medium plasticity, low toughness, no to slow dilatancy, medium dry strength fines; about 15% fine to coarse, angular, hard sand; about 10% fine to coarse, angular, hard gravel; dark gray ; firm to hard; moist; strong reaction w/HCl; homogeneous; (Glacial Till).	
														22		559			
														23		558			
														24		557			
S	6					5.0				25.0				25		556			
														26		555			
														27		554		27.0 Elastic SILT with Gravel (MH) - About 75% medium plasticity, low toughness, no to slow dilatancy, medium dry strength fines; about 20% fine to coarse, angular, hard gravel; about 5% fine to coarse, angular, hard sand; w/cobbles; dark gray ; firm to hard; moist; strong reaction w/HCl; homogeneous; (Glacial Till). 4" cobble @ 27.0'	
														28		553			
														29		552		29.0 DOLOMITE; gray; blocky; very fine grained; slightly weathered; very strong; hard; pitted; (Bass Islands Group).	
														30					

BLACK & VEATCH

BORING LOG

BORING NO. MW-384D

CLIENT	PROJECT	PROJECT NO.
Detroit Edison	Fermi 3 COL Application	147483

PROJECT LOCATION	COORDINATES	GROUND ELEVATION (DATUM)	TOTAL DEPTH
Monroe, Michigan	N 5537.6' E 4402.8'	581.3 ft (NAVD 88)	101.0 (feet)

SURFACE CONDITIONS	COORDINATE SYSTEM	DATE START	DATE FINISHED
Grassy area behind berm from railroad tracks	Plant	05/09/07	05/17/07

LOGGED BY	CHECKED BY	APPROVED BY
Grainger/Ohlmacher	Dogbey/Ohlmacher	Meyer

SAMPLING: SAMPLE TYPE	SAMPLE NUMBER	SET 6 INCHES	2ND 6 INCHES	3RD 6 INCHES	N VALUE	SAMPLE RECOVERY
CORING: CORE SIZE	RUN NUMBER	RUN LENGTH	RUN RECOVERY	RQD RECOVERY	PERCENT RECOVERY	RQD
S	7		30.0			2.5
PQ	1	3.0	1.6	0.6	53	20
PQ	2	5.0	4.6	2.6	92	52
PQ	3	5.0	4.9	3.5	98	70

DEPTH (FEET)	SAMPLE TYPE	ELEVATION (FEET)	GRAPHIC LOG	CLASSIFICATION OF MATERIALS	REMARKS
30		551			
31		550			
32		549			
33		548		33.0 DOLOMITE; gray; very fine grained; slightly weathered; strong; moderately hard; banded; <5% vugs; (Bass Islands Group). highly fractured, very closely spaced joints @ 34.0-34.5' 80°,J,T,No,No,PI,SR @ 34.5-34.8', 35.5-35.7' 0°,J,VN,No,No,PI,SR @ 35.1', 35.3', 35.5'	Set nominal 6" temporary steel casing to 33.0'. Below 33.0' continued w/triple tube wire line core barrel using water as drilling fluid. Core box #1 starts @ 33.0'.
34		547			
35		546			
36		545		80°,J,T,No,No,PI,SR @ 36.3-36.6' grades 40% vugs w/5% calcite fill @ 36.6' 0°,J,VN,No,No,PI,SR @ 36.6'	
37		544		grades 10% vugs w/no fill @ 37.1' 60°,J,VN,No,No,PI,SR @ 37.3-37.5'	
38		543		25°,J,VN,No,No,WA,R @ 38.2'	
39		542		fractured, very closely spaced joints @ 38.6-38.7' 85°,J,T,No,No,PI,SR @ 39.0-41.1'	
40		541		grades dark gray, w/thin shale beds @ 40.1' 40.3 DOLOMITE; oolitic; brownish gray; very fine grained; slightly weathered; strong; moderately hard; banded; 20% vugs; (Bass Islands Group). 0°,B,VN,No,No,PI,S @ 41.2'	
41		540			
42		539			
43		538		25°,J,T,No,No,St,SR @ 43.0-43.2'	
44		537		43.8 DOLOMITE; gray; very fine grained; slightly weathered; strong; moderately hard; banded; (Bass Islands Group). fractured, very closely spaced joints @ 43.9-44.0'	
45					

BLACK & VEATCH

BORING LOG

BORING NO. MW-384D

CLIENT	PROJECT	PROJECT NO.
Detroit Edison	Fermi 3 COL Application	147483

PROJECT LOCATION	COORDINATES	GROUND ELEVATION (DATUM)	TOTAL DEPTH
Monroe, Michigan	N 5537.6' E 4402.8'	581.3 ft (NAVD 88)	101.0 (feet)

SURFACE CONDITIONS	COORDINATE SYSTEM	DATE START	DATE FINISHED
Grassy area behind berm from railroad tracks	Plant	05/09/07	05/17/07

LOGGED BY	CHECKED BY	APPROVED BY
GEO for Grainger/Ohlmacher GEO	Em for Dogbey/Ohlmacher GEO	Em Meyer

SAMPLING: SAMPLE TYPE	SAMPLE NUMBER	SET 6 INCHES	2ND 6 INCHES	3RD 6 INCHES	N VALUE	SAMPLE RECOVERY

CORING: CORE SIZE	RUN NUMBER	RUN LENGTH	RUN RECOVERY	RQD RECOVERY	PERCENT RECOVERY	RQD

DEPTH (FEET)	SAMPLE TYPE	ELEVATION (FEET)	GRAPHIC LOG	CLASSIFICATION OF MATERIALS	REMARKS
45		536		45°,J,T,No,No,Pl,SR @ 44.2-44.4' 0°,B,VN,No,No,Pl,S @ 44.6', 44.9', 45.3', 45.4', 45.7', 46.5' grades interbedded w/shale bands, about 0.2' spacing @ 44.7'	
46		535		70°,J,No,No,Pl,SR @ 46.0-46.3'	
47		534			
48		533		0°,B,VN,No,No,Pl,S @ 47.8', 48.0' grades w/shale partings @ 48.2'	Core box #2 starts @ 48.0'.
49		532		0°,B,VN,No,No,Pl,S @ 48.6', 48.9', 49.3'	
50		531		highly fractured, very closely spaced, irregular joints @ 50.0-50.4' 20°,J,VN,No,No,Pl,SR @ 50.1' bedding dips 30° @ 50.3'	
51		530		50°,J,T,No,No,Pl,SR @ 50.5-51.0' (3 parallel joints) grades 20% vugs @ 51.2'	
52		529		highly fractured, very closely spaced joints @ 51.2-51.5' highly fractured, gravelly @ 52.1-52.3'	
53		528		highly fractured, very closely spaced joints @ 52.9-53.1'	
54		527		75°,J,VN,No,No,Pl,SR @ 53.5-54.0' grades 10% vugs @ 54.0' 10°,J,VN,Pl,SR @ 54.0'	
55		526		70°,J,VN,No,No,Pl,SR @ 55.0-55.3' 40°,J,VN,No,No,Pl,SR @ 55.2-55.4'	
56		525		grades brecciated, indurated, w/stylolites @ 56.2'	
57		524		70°,J,VN,Ca,Pa,Pl,SR @ 57.4-58.1' highly fractured, very closely spaced joints @ 57.6-58.1'	
58		523		grades w/no brecciation, bedding dips 0° @ 58.0'	Core box #3 starts @ 58.1'.
59		522		0°,B,VN,No,No,Pl,S @ 58.7', 59.8' 45°,J,T,No,No,Pl,SR @ 59.3-59.7' fractured, very closely spaced joints @ 59.4-59.7'	Drill stem dropped about 0.5' @ 59'.
60					

CORING	RUN NUMBER	RUN LENGTH	RUN RECOVERY	RQD RECOVERY	PERCENT RECOVERY	RQD
			46.0			
PQ	4	5.0	5.0	4.3	100	86
			51.0			
PQ	5	5.0	5.0	4.1	100	82
			56.0			
PQ	6	5.0	4.6	3.5	92	70

BLACK & VEATCH

BORING LOG

BORING NO. MW-384D

CLIENT	PROJECT	PROJECT NO.
Detroit Edison	Fermi 3 COL Application	147483

PROJECT LOCATION	COORDINATES	GROUND ELEVATION (DATUM)	TOTAL DEPTH
Monroe, Michigan	N 5537.6' E 4402.8'	581.3 ft (NAVD 88)	101.0 (feet)

SURFACE CONDITIONS	COORDINATE SYSTEM	DATE START	DATE FINISHED
Grassy area behind berm from railroad tracks	Plant	05/09/07	05/17/07

LOGGED BY	CHECKED BY	APPROVED BY
Grainger/Ohlmacher	Dogbey/Ohlmacher	Meyer

SAMPLING / CORING	SAMPLE TYPE	SAMPLE NUMBER	SET 6 INCHES	2ND 6 INCHES	3RD 6 INCHES	N VALUE	SAMPLE RECOVERY	CORE SIZE	RUN NUMBER	RUN LENGTH	RUN RECOVERY	RQD RECOVERY	PERCENT RECOVERY	RQD	DEPTH (FEET)	SAMPLE TYPE	ELEVATION (FEET)	GRAPHIC LOG	CLASSIFICATION OF MATERIALS	REMARKS
															60		521		highly fractured, very closely spaced joints to gravelly @ 60.3-61.0'	
											61.0				61		520			
															62		519		70°,J,T,No,No,Pl,SR @ 62.1-63.1' fractured, very closely spaced joints @ 62.4-63.0'	
															63		518		0°,J,VN,Ir,R @ 63.0'	Core box #4 starts @ 62.7'.
PQ	7	5.0	5.0	3.4	100	68									64		517		0°,B,VN,No,No,Pl,S @ 63.7', 64.3', 64.7' 90°,J,T,No,No,Pl,SR @ 63.7-64.3' highly fractured @ 64.1-64.3', 67.8-68.1'	
															65		516		50°,J,T,No,No,Pl,SR @ 64.8-65.1' 0°,B,VN,No,No,Pl,S @ 65.4', 65.6'	
											66.0				66		515		90°,J,T,No,No,Pl,SR @ 66.0-66.9'	
															67		514		20°,J,VN,No,No,Pl,SR @ 67.0', 67.4'	
																			67.1 SHALE; black; slightly weathered; weak; low hardness; (Bass Islands Group). 67.3	
PQ	8	5.0	4.4	2.6	88	52									68		513		DOLOMITE; gray; very fine grained; slightly weathered; strong; moderately hard; banded; 15% vugs; (Bass Islands Group). 80°,J,VN,No,No,Pl,R @ 67.5-68.2' highly fractured @ 67.8-68.1'	
															69		512		highly fractured, very closely spaced joints @ 68.6-69.3' 50°,V,N,Ca,Fi,Ir,R @ 69.6-69.9'	
															70		511		0°,B,VN,No,No,Pl,S @ 70.3'	
											71.0				71		510		grades no vugs @ 71.0' 0°,B,VN,No,No,Pl,S @ 71.3', 72.1', 73.0'	
															72		509		highly fractured, very closely spaced joints @ 72.1-73.0' 90°,J,T,No,No,Pl,SR @ 72.3-73.0', 74.8-75.9'	
															73		508		highly fractured @ 73.1-74.0'	Core box #5 starts @ 73.1'.
PQ	9	5.0	4.9	2.2	98	44									74		507		zone w/20% vugs @ 73.7-74.1' 25°,J,VN,Ca,Fi,Pl,S @ 73.9' highly fractured, very closely spaced joints to gravelly @ 74.3-74.7'	
															75					

BLACK & VEATCH

BORING LOG

BORING NO. MW-384D

CLIENT	PROJECT	PROJECT NO.
Detroit Edison	Fermi 3 COL Application	147483

PROJECT LOCATION	COORDINATES	GROUND ELEVATION (DATUM)	TOTAL DEPTH
Monroe, Michigan	N 5537.6' E 4402.8'	581.3 ft (NAVD 88)	101.0 (feet)

SURFACE CONDITIONS	COORDINATE SYSTEM	DATE START	DATE FINISHED
Grassy area behind berm from railroad tracks	Plant	05/09/07	05/17/07

LOGGED BY	CHECKED BY	APPROVED BY
GCO for GCO Grainger/Ohlmacher	EM for GCO Dogbey/Ohlmacher	EM Meyer

SAMPLING: SAMPLE TYPE	SAMPLE NUMBER	SET 6 INCHES	2ND 6 INCHES	3RD 6 INCHES	N VALUE	SAMPLE RECOVERY	CORING: CORE SIZE	RUN NUMBER	RUN LENGTH	RUN RECOVERY	RQD RECOVERY	PERCENT RECOVERY	RQD	DEPTH (FEET)	SAMPLE TYPE	ELEVATION (FEET)	GRAPHIC LOG	CLASSIFICATION OF MATERIALS	REMARKS
														75		506		highly fractured, very closely spaced joints @ 75.4-75.7'	
										76.0				76		505		15°,J,VN,No,No,Pl,SR @ 76.4' 0°,B,VN,No,No,Pl,S @ 76.7', 76.9'	
														77		504		highly fractured, very closely spaced joints @ 77.5-77.9' 90°,J,T,No,No,Pl,SR @ 77.8-78.5'	
PQ	10	5.0	4.4	1.4	88	28								78		503		0°,B,VN,No,No,Pl,S @ 78.6'(2 parallel joints), 78.9', 79.6'	
														79		502		fractured, closely spaced joints @ 79.2-79.4'	
														80		501		70°,J,T,No,No,Pl,SR @ 79.9-80.6' 0°,B,VN,No,No,Pl,S @ 80.1' highly fractured, very closely spaced joints @ 80.3-80.7'	
										81.0				81		500		highly fractured, very closely spaced joints, @ 81.2-82.2'	Some core loss @ 81.2-82.2'
														82		499		highly fractured, very closely spaced joints @ 82.4-82.7' 0°,B,VN,No,No,Pl,S @ 82.9', 83.5'	
PQ	11	5.0	4.4	1.0	88	20								83		498			Core box #6 starts @ 83.5'.
														84		497		0°,B,VN,No,No,Pl,S @ 84.0', 84.3' highly fractured, very closely spaced joints @ 84.4-84.7' 90°,J,T,No,No,Pl,SR @ 84.7-85.6'	
														85		496		highly fractured, closely spaced joints @ 85.0-85.4' fractures, very closely spaced joints @ 85.7-86.0' 50°,J,T,No,No,Pl,SR @ 85.7-86.6'	
										86.0				86		495			
														87		494		highly fractured, very closely spaced joints, some clay fill @ 86.9-87.1' 80°,J,T,No,No,Pl,SR @ 87.2-87.6' highly fractured, very closely spaced joints @ 87.6-88.1'	
PQ	12	5.0	4.2	0.7	84	14								88		493		50°,J,T,No,No,Pl,SR @ 87.8-88.1' 25°,J,T,No,No,Pl,SR @ 88.2', 90.5' 0°,B,T,No,No,Pl,S @ 88.6' 85°,J,T,No,No,WA,SR @ 88.6-89.7'	
														89		492		highly fractured, very closely spaced joints @ 89.1-89.7'	
														90					

BLACK & VEATCH

BORING LOG

BORING NO. MW-384D
SHEET 7 OF 7

CLIENT	PROJECT	PROJECT NO.
Detroit Edison	Fermi 3 COL Application	147483

PROJECT LOCATION	COORDINATES	GROUND ELEVATION (DATUM)	TOTAL DEPTH
Monroe, Michigan	N 5537.6' E 4402.8'	581.3 ft (NAVD 88)	101.0 (feet)

SURFACE CONDITIONS	COORDINATE SYSTEM	DATE START	DATE FINISHED
Grassy area behind berm from railroad tracks	Plant	05/09/07	05/17/07

LOGGED BY	CHECKED BY	APPROVED BY
Grainger/Ohlmacher	Dogbey/Ohlmacher	Meyer

SAMPLING: SAMPLE TYPE	SAMPLE NUMBER	SET 6 INCHES	2ND 6 INCHES	3RD 6 INCHES	N VALUE	SAMPLE RECOVERY	CORING: CORE SIZE	RUN NUMBER	RUN LENGTH	RUN RECOVERY	RQD RECOVERY	PERCENT RECOVERY	RQD	DEPTH (FEET)	SAMPLE TYPE	ELEVATION (FEET)	GRAPHIC LOG	CLASSIFICATION OF MATERIALS	REMARKS
														90		491		75°,J,T,No,No,Pl,SR @ 89.7-90.4'	
										91.0				91		490		90°,J,T,Ca,Sp,Pl,SR @ 91.0-96.0'	
														92		489		grades slightly brownish gray @ 92.0'	
														93		488			
							PQ	13	5.0	5.0	4.6	100	92	94		487			Core box #7 starts @ 94.2'.
														95		486			
										96.0				96		485		gravel-size fragments @ 96.0-98.2'	
														97		484			
							PQ	14	5.0	2.9	0.6	58	12	98		483		90°,J,No,No,Pl,SR @ 98.2-99.4'	
														99		482		40°,J,T,No,No,Pl,R @ 99.2-99.5' 90°,J,T,No,No,Pl,SR @ 99.5-99.9'	
														100		481			
														101		480			Bottom of boring @ 101.0'. Water level @ 15.8' @ completion of drilling. Monitoring well installed on 05/31/07.
														102		479			
														103		478			
														104		477			
														105					

BLACK & VEATCH

BORING LOG

BORING NO. MW-384S

CLIENT	PROJECT	PROJECT NO.
Detroit Edison	Fermi 3 COL Application	147483

PROJECT LOCATION	COORDINATES	GROUND ELEVATION (DATUM)	TOTAL DEPTH
Monroe, Michigan	N 5532.6' E 4403.9'	581.4 ft (NAVD 88)	17.0 (feet)

SURFACE CONDITIONS	COORDINATE SYSTEM	DATE START	DATE FINISHED
Grassy area behind berm from railroad track	Plant	05/18/07	05/18/07

LOGGED BY	CHECKED BY	APPROVED BY
Ohlmacher GEO	Meyer EM	Meyer EM

SAMPLING							CORING									
SAMPLE TYPE	SAMPLE NUMBER	SET 6 INCHES	2ND 6 INCHES	3RD 6 INCHES	N VALUE	SAMPLE RECOVERY	CORE SIZE	RUN NUMBER	RUN LENGTH	RUN RECOVERY	RQD RECOVERY	PERCENT RECOVERY	RQD	DEPTH (FEET)	SAMPLE TYPE	ELEVATION (FEET)	GRAPHIC LOG	CLASSIFICATION OF MATERIALS	REMARKS
SPT	1	WOH	2	5	7	1.5								0		581		Fat CLAY with Sand (CH)-About 70% high plasticity, high toughness, slow dilatancy fines; about 20% fine sand; about 10% organics; very dark gray; soft; moist; strong reaction w/HCl; homogeneous; (Topsoil-Fill).	Boring advanced w/4¼" ID, 8" OD hollow stem augers. SPT performed w/D-50 automatic hammer.
														1		580			
														2		579			PP=0.75 TSF
														3		578		grades firm, less organics @ 2.5'	PP=3.0 TSF
														4		577			
														5		576		5.0	
SPT	2	7	5	4	9	1.0								6		575		Lean CLAY with Sand (CL) - About 85% medium plasticity, medium toughness, no dilatancy, high dry strength fines; about 10% fine to coarse, subrounded to angular sand; about 5% fine to coarse rounded gravel; dark yellowish brown; firm; moist; homogeneous; (Fill).	
														7		574			
														8		573			
														9		572			
														10		571			
SPT	3	WOH	1	1	2	0.2								11		570			
														12		569			
														13		568			
														14		567			
														15					

BLACK & VEATCH

BORING LOG

BORING NO. MW-384S

CLIENT	PROJECT	PROJECT NO.
Detroit Edison	Fermi 3 COL Application	147483

PROJECT LOCATION	COORDINATES	GROUND ELEVATION (DATUM)	TOTAL DEPTH
Monroe, Michigan	N 5532.6' E 4403.9'	581.4 ft (NAVD 88)	17.0 (feet)

SURFACE CONDITIONS	COORDINATE SYSTEM	DATE START	DATE FINISHED
Grassy area behind berm from railroad track	Plant	05/18/07	05/18/07

LOGGED BY	CHECKED BY	APPROVED BY
Ohlmacher GCO	Meyer EM	Meyer EM

SAMPLING							CORING										
SAMPLE TYPE	SAMPLE NUMBER	SET 6 INCHES	2ND 6 INCHES	3RD 6 INCHES	N VALUE	SAMPLE RECOVERY	CORE SIZE	RUN NUMBER	RUN LENGTH	RUN RECOVERY	RQD RECOVERY	PERCENT RECOVERY	RQD	DEPTH (FEET)	SAMPLE TYPE	ELEVATION (FEET)	GRAPHIC LOG	CLASSIFICATION OF MATERIALS	REMARKS
TW	4					1.4								15		566		Lean CLAY (CH)-About 100% LL=43, PL=19, no dilatancy fines; brown to black; soft; moist; weak reaction w/HCl; lensed; (Peat & Lacustrine Deposit). 15.0	PP=0.5 TSF TV=0.35 TSF
														16		565			
														17		564			Bottom of boring @ 17.0'. Water level @ 9.3' @ completion of drilling. Monitoring well installed on 05/18/07.
														18		563			
														19		562			
														20		561			
														21		560			
														22		559			
														23		558			
														24		557			
														25		556			
														26		555			
														27		554			
														28		553			
														29		552			
														30					

BLACK & VEATCH

BORING LOG

BORING NO. MW-386D

CLIENT	PROJECT	PROJECT NO.
Detroit Edison	Fermi 3 COL Application	147483

PROJECT LOCATION	COORDINATES	GROUND ELEVATION (DATUM)	TOTAL DEPTH
Monroe, Michigan	N 6336.7' E 5203.8'	582.3 ft (NAVD 88)	91.5 (feet)

SURFACE CONDITIONS	COORDINATE SYSTEM	DATE START	DATE FINISHED
Level, grassy	Plant	05/19/07	06/06/07

LOGGED BY	CHECKED BY	APPROVED BY
GCO for Grainger/Deeken JDV	EM for Dogbey/Meyer EM	Meyer EM

SAMPLING: SAMPLE TYPE	SAMPLE NUMBER	SET 6 INCHES	2ND 6 INCHES	3RD 6 INCHES	N VALUE	SAMPLE RECOVERY	CORING: CORE SIZE	RUN NUMBER	RUN LENGTH	RUN RECOVERY	RQD RECOVERY	PERCENT RECOVERY	RQD	DEPTH (FEET)	ELEVATION (FEET)	CLASSIFICATION OF MATERIALS	REMARKS
														0	582	TOPSOIL;	Boring advanced w/vacuum excavation.
														0.5		Silty GRAVEL with Sand (GM) - About 65% coarse, angular, hard gravel w/max. size 3"; about 20% fine to coarse, angular, hard sand; about 15% fines; yellowish brown; moist; strong reaction w/HCl; homogeneous; (Fill).	
														1	581		
														2	580		
														3	579		
														4	578		
			5.0											5	577	Lean CLAY with Sand (CL)-About 85% medium plasticity, medium toughness, slow dilatancy, medium dry strength fines; about 15% coarse, subrounded to rounded, hard sand; trace gravel; yellowish brown & gray; (Fill).	Refusal to vacuum excavation @ 5.2'. Continued below 5.2' w/2¼" OD geoprobe continuous barrel sampler. Grab sample @ 7.0'.
														6	576		
GP	1					5.0								7	575		
														8	574		
														9	573		
			10.0											10	572		
														11	571		
														12	570		
GP	2					5.0								13	569		Grab sample @ 12.5'.
														14	568		
														15			
																14.7	

6/11/2008 9:18 AM DTE-Fermi 3

BLACK & VEATCH

BORING LOG

BORING NO. MW-386D

CLIENT	PROJECT	PROJECT NO.
Detroit Edison	Fermi 3 COL Application	147483

PROJECT LOCATION	COORDINATES	GROUND ELEVATION (DATUM)	TOTAL DEPTH
Monroe, Michigan	N 6336.7' E 5203.8'	582.3 ft (NAVD 88)	91.5 (feet)

SURFACE CONDITIONS	COORDINATE SYSTEM	DATE START	DATE FINISHED
Level, grassy	Plant	05/19/07	06/06/07

LOGGED BY	CHECKED BY	APPROVED BY
Grainger/Deeken	Dogbey/Meyer	Meyer

SAMPLING							CORING									
SAMPLE TYPE	SAMPLE NUMBER	SET 6 INCHES	2ND 6 INCHES	3RD 6 INCHES	N VALUE	SAMPLE RECOVERY	CORE SIZE	RUN NUMBER	RUN LENGTH	RUN RECOVERY	RQD RECOVERY	PERCENT RECOVERY	RQD	DEPTH (FEET)	ELEVATION (FEET)	GRAPHIC LOG	CLASSIFICATION OF MATERIALS	REMARKS
GP	3					5.0				15.0				15	567		Fat CLAY (CH) - About 100% high plasticity, high toughness, no dilatancy, high dry strength fines; dark gray; very soft; moist; no reaction w/HCl; homogeneous; (Lacustrine Deposit).	Grab sample @ 18.0'.
														16	566			
														17	565			
														18	564			
														19	563			
																	19.5	
GP	4					4.8				20.0				20	562		Lean CLAY with Sand (CL) - About 80% medium plasticity, low toughness, no dilatancy, high dry strength fines; about 15% fine to coarse, rounded, hard sand; trace gravel; dark gray; firm to hard; moist; strong reaction w/HCl; homogeneous; (Glacial Till). 0.1' fine to coarse sand seam; wet @ 21.0'	Set 1" temporary PVC screen from 18 to 22' to collect water samples, then removed PVC casing.
														21	561			
														22	560			Grab sample @ 22.0'.
														23	559			
																	23.3	
														24	558		Lean CLAY with Sand (CH) - About 75% medium plasticity, medium toughness, no dilatancy, high dry strength fines; about 15% fine to coarse, angular to rounded, hard sand; about 10% fine to coarse angular to subrounded hard gravel; dark gray; hard; moist; strong reaction w/HCl; homogeneous; (Glacial Till).	Refusal to geoprobe @ 25.0'. Below 25' continued w/4" ID sonic continuous sampler w/ nominal 6" temporary steel casing advanced w/sampler.
S	5					3.5				25.0				25	557			
														26	556		grades w/ gravel w/max. size 3" @ 26.5'	
																	26.5	Grab sample @ 23.5'
														27	555		DOLOMITE; gray; very fine grained; slightly weathered; strong; moderately hard; (Bass Islands Group). highly fractured @ 26.5-28.5'	
														28	554			Set nominal 6" temporary steel casing to 28.5'. Below 28.5' continued w/ triple tube wire line core barrel
										28.5				29	553		0°,B,N,Cl,Pa,Pl,SR @ 29.8',30.4',31.5',31.8',31.9', 32.9',	
														30				

BLACK & VEATCH

BORING LOG

BORING NO. MW-386D

CLIENT	PROJECT	PROJECT NO.
Detroit Edison	Fermi 3 COL Application	147483

PROJECT LOCATION	COORDINATES	GROUND ELEVATION (DATUM)	TOTAL DEPTH
Monroe, Michigan	N 6336.7' E 5203.8'	582.3 ft (NAVD 88)	91.5 (feet)

SURFACE CONDITIONS	COORDINATE SYSTEM	DATE START	DATE FINISHED
Level, grassy	Plant	05/19/07	06/06/07

LOGGED BY	CHECKED BY	APPROVED BY
Grainger/Deeker	Dogbey/Meyer	Meyer

SAMPLING							CORING									
SAMPLE TYPE	SAMPLE NUMBER	SET 6 INCHES	2ND 6 INCHES	3RD 6 INCHES	N VALUE	SAMPLE RECOVERY	CORE SIZE	RUN NUMBER	RUN LENGTH	RUN RECOVERY	RQD RECOVERY	PERCENT RECOVERY	RQD	DEPTH (FEET)	SAMPLE TYPE	ELEVATION (FEET)	GRAPHIC LOG	CLASSIFICATION OF MATERIALS	REMARKS
														30		552			w/diamond bit using water as drilling fluid.
PQ	1							1	5	5.0	2.1	100	42	31		551		85°,J,N,Cl,Pa,Pl,SR @ 30.6-31.1',31.4-32.0',32.9-33.0'	Core box #1 starts @ 28.5'. 70% drill water return. Drill chatter @ 31.0'.
														32		550			
														33		549			
										33.5				34		548		60°,J,N,Ca,Pa,Pl,SR @ 34.3',34.8',35.1',35.6',36.5',37.0',38.5'	Drill chatter throughout Run 2.
PQ	2							2	5	5.0	0.4	100	8	35		547		5°,J,N,Cl,Pa,Pl,SR @ 35.5',35.8',36.1',36.4',36.9'	
														36		546			
														37		545		37.0 DOLOMITE; argillaceous; light gray; micritic; moderately weathered; strong; moderately hard; (Bass Islands Group).	
														38		544			
										38.5				39		543		80°,J,N,Ca,Pa,Pl,SR @ 38.1-39.8'	Core box #2 starts @ 38.5'.
																		2" black clay band @ 39.9'	
														40		542		39.8 DOLOMITE; light gray; very fine grained; slightly weathered; strong; hard; vugs to ½"; (Bass Islands Group).	
PQ	3							3	5	5.0	2.8	100	56	41		541		5°,B,N,Cl,Pa,Pl,SR @ 40.6',40.9',42.0',42.4',42.7' 30°,J,N,Cl,Pa,Pl,SR @ 41.6',42.2',43.0' 80°,J,N,Cl,Pa,Pl,SR @ 42.0-42.3'	
														42		540			
														43		539			
										43.5				44		538			
														45					

BLACK & VEATCH

BORING LOG

BORING NO. MW-386D

CLIENT	PROJECT	PROJECT NO.
Detroit Edison	Fermi 3 COL Application	147483

PROJECT LOCATION	COORDINATES	GROUND ELEVATION (DATUM)	TOTAL DEPTH
Monroe, Michigan	N 6336.7' E 5203.8'	582.3 ft (NAVD 88)	91.5 (feet)

SURFACE CONDITIONS	COORDINATE SYSTEM	DATE START	DATE FINISHED
Level, grassy	Plant	05/19/07	06/06/07

LOGGED BY	CHECKED BY	APPROVED BY
Grainger/Deeker	Dogbey/Meyer	Meyer

SAMPLING							CORING									
SAMPLE TYPE	SAMPLE NUMBER	SET 6 INCHES	2ND 6 INCHES	3RD 6 INCHES	N VALUE	SAMPLE RECOVERY	CORE SIZE	RUN NUMBER	RUN LENGTH	RUN RECOVERY	RQD RECOVERY	PERCENT RECOVERY	RQD	DEPTH (FEET)	SAMPLE TYPE	ELEVATION (FEET)	GRAPHIC LOG	CLASSIFICATION OF MATERIALS	REMARKS
														45		537		15°,J,MW,Cl,Sp,Pl,VR @ 45.2',46.1'	
PQ	4	5	5.0	3.3	100	66								46		536		vugs to ½" @ 46.1-48.0' 3" argillaceous inclusion @ 46.6'	Core box #3 starts @ 46.3'.
														47		535			
														48		534		1" voids infilled w/calcite @ 47.7-48.3'	
			48.5															70°,J,MW,Cl,Sp,Pl,VR @ 48.3'	
														49		533		80°,J,N,No,No,Pl,R @ 49.1',49.2',49.8',51.6',51.9',52.6',52.7'	
														50		532		75°,J,N,Cl,Pa,Pl,Slk @ 50.0' 15°,J,N,Cl,Sp,Pl,SR @ 50.7' black shale seam @ 50.0' brecciated; healed @ 50.2-50.8'	
PQ	5	5	4.9	1.2	98	24								51		531		60°,J,N,Cl,Pa,Pl,SR @ 54.3',55.2',55.3',55.4',56.4',56.8',57.2',57.3',57.4',58.4'	
														52		530			
														53		529			
			53.5											54		528		variable brecciation; healed @ 54.4-58.4'	25% drill water return @ 54.0'.
														55		527		highly fractured @ 55.2-55.7'	Core box #4 starts @ 54.8'.
PQ	6	5	5.0	2.9	100	58								56		526		highly fractured @ 56.3-56.9'	
														57		525			
														58		524			
			58.5											59		523		70-80°,B @ 59.1-60.5' (intact bedding planes) 60°,J,N,No,No,Pl,S @ 58.8',59.0',60.3'	
														60					

BLACK & VEATCH

BORING LOG

BORING NO. MW-386D

CLIENT	PROJECT	PROJECT NO.
Detroit Edison	Fermi 3 COL Application	147483

PROJECT LOCATION	COORDINATES	GROUND ELEVATION (DATUM)	TOTAL DEPTH
Monroe, Michigan	N 6336.7' E 5203.8'	582.3 ft (NAVD 88)	91.5 (feet)

SURFACE CONDITIONS	COORDINATE SYSTEM	DATE START	DATE FINISHED
Level, grassy	Plant	05/19/07	06/06/07

LOGGED BY	CHECKED BY	APPROVED BY
Grainger/Deeker	Dogbey/Meyer	Meyer

SAMPLING							CORING									
SAMPLE TYPE	SAMPLE NUMBER	SET 6 INCHES	2ND 6 INCHES	3RD 6 INCHES	N VALUE	SAMPLE RECOVERY	CORE SIZE	RUN NUMBER	RUN LENGTH	RUN RECOVERY	RQD RECOVERY	PERCENT RECOVERY	RQD	DEPTH (FEET)	SAMPLE TYPE	ELEVATION (FEET)	GRAPHIC LOG	CLASSIFICATION OF MATERIALS	REMARKS
														60		522			
																		60.5	
							PQ	7	5	5.0	1.6	100	32	61		521		DOLOMITE; oolitic; brown; fine grained; slightly weathered; strong; hard; brecciated; healed; occasional vugs to 1/8"; weak reaction w/HCl; (Bass Islands Group). 60°,J,N,No,No,Pl,S @ 60.6',61.5',62.2',62.9',63.4' 80°,J,N,Cl,Sp,Pl,SR @ 62.5',63.3'	
														62		520			
														63		519		brecciation grades out @ 63.0'	
										63.5									Core box #5 starts @ 63.5'.
														64		518		brecciated @ 64.0-65.7' w/calcite inclusions	
														65		517			
							PQ	8	5	5.0	2.5	100	50	66		516		60°,J,N,Cl,Sp,Pl,SR @ 63.6',64.1',65.1',65.7',65.9', 66.3',68.3' ¼" thick black shale parting @ 66.0' grades w/ occasional white bands	
														67		515			
														68		514			
										68.5									
														69		513			
																		69.1	
														70		512		DOLOMITE; argillaceous; brown; micritic; slightly weathered; strong; hard; brecciated; healed; (Bass Islands Group).	
							PQ	9	5	5.0	3.8	100	76	71		511		5°,B,N,Cl,Pa,Pl,SR @ 69.1',69.4',71.1',71.5',71.6', 72.0',72.8',73.3'	
														72		510			
														73		509			
										73.5									Core box #6 starts @ 73.2'.
														74		508			
														75					

BLACK & VEATCH

BORING LOG

BORING NO. MW-386D

SHEET 6 OF 7

CLIENT	PROJECT	PROJECT NO.
Detroit Edison	Fermi 3 COL Application	147483

PROJECT LOCATION	COORDINATES	GROUND ELEVATION (DATUM)	TOTAL DEPTH
Monroe, Michigan	N 6336.7' E 5203.8'	582.3 ft (NAVD 88)	91.5 (feet)

SURFACE CONDITIONS	COORDINATE SYSTEM	DATE START	DATE FINISHED
Level, grassy	Plant	05/19/07	06/06/07

LOGGED BY	CHECKED BY	APPROVED BY
Grainger/Deeken	Dogbey/Meyer	Meyer

SAMPLING							CORING									
SAMPLE TYPE	SAMPLE NUMBER	SET 6 INCHES	2ND 6 INCHES	3RD 6 INCHES	N VALUE	SAMPLE RECOVERY	CORE SIZE	RUN NUMBER	RUN LENGTH	RUN RECOVERY	RQD RECOVERY	PERCENT RECOVERY	RQD	DEPTH (FEET)	SAMPLE TYPE	ELEVATION (FEET)	GRAPHIC LOG	CLASSIFICATION OF MATERIALS	REMARKS
PQ	10	5								5.0	5.0	100	100	75		507			
														76		506			
														77		505		77.3	
														78		504		DOLOMITE; gray; very fine grained; slightly weathered; strong; hard; brecciated; healed; (Bass Islands Group).	
			78.5															occasional vugs to ¼" @ 79.0'	
														79		503		35°,J,N,Cl,Pa,Pl,SR @ 77.8' 0°,B,MW,Cl,Pa,Pl,VR @ 79.7'	
														80		502		60°,J,N,Cl,Sp,Pl,R @ 80.0'	
PQ	11	5								5.0	3.2	100	64	81		501		60°,J,N,Cl,Sp,Pl,R @ 80.7' 85°,J,N,Cl,Sp,R @ 81.0-81.7'	
														82		500			
														83		499		60°,J,N,Cl,Sp,Pl,R @ 82.6'	Core box #7 starts @ 82.5'.
			83.5																
														84		498		60°,J,N,Cl,Sp,Pl,R @ 84.0'	
														85		497			
PQ	12	5								5.0	4.5	100	90	86		496		0°,B,MW,Cl,Pa,Pl,VR @ 86.4' 85°,J,N,H,Sp,R @ 86.5-88.0' 1/8" black shale parting @ 86.5'	
														87		495		grades argillaceous @ 87'	
														88		494		brecciation grades out @ 88.0' 0°,B,MW,Cl,Pa,Pl,VR @ 88.0' 2" black shale band @ 89.0'	
			88.5											89		493		30°,J,N,Cl,Pa,SR @ 88.6',89.7'	
														90					

BLACK & VEATCH

BORING LOG

BORING NO. MW-386D

CLIENT	PROJECT	PROJECT NO.
Detroit Edison	Fermi 3 COL Application	147483

PROJECT LOCATION	COORDINATES	GROUND ELEVATION (DATUM)	TOTAL DEPTH
Monroe, Michigan	N 6336.7' E 5203.8'	582.3 ft (NAVD 88)	91.5 (feet)

SURFACE CONDITIONS	COORDINATE SYSTEM	DATE START	DATE FINISHED
Level, grassy	Plant	05/19/07	06/06/07

LOGGED BY	CHECKED BY	APPROVED BY
Grainger/Deeken	Dogbey/Meyer	Meyer

SAMPLING							CORING									
SAMPLE TYPE	SAMPLE NUMBER	SET 6 INCHES	2ND 6 INCHES	3RD 6 INCHES	N VALUE	SAMPLE RECOVERY	CORE SIZE	RUN NUMBER	RUN LENGTH	RUN RECOVERY	RQD RECOVERY	PERCENT RECOVERY	RQD	DEPTH (FEET)	SAMPLE TYPE	ELEVATION (FEET)	GRAPHIC LOG	CLASSIFICATION OF MATERIALS	REMARKS
PQ	13	3	2.5	2.0	83	66								90		492			91.5' Bit sheared off core barrel
														91		491			
														92		490			Bottom of boring @ 91.5'. Water level @ 15.0' one hour after drilling completion. Monitoring well installed on 06/06/07.
														93		489			
														94		488			
														95		487			
														96		486			
														97		485			
														98		484			
														99		483			
														100		482			
														101		481			
														102		480			
														103		479			
														104		478			
														105					

BLACK & VEATCH

BORING LOG

BORING NO. MW-386S

SHEET 1 OF 2

CLIENT	PROJECT	PROJECT NO.
Detroit Edison	Fermi 3 COL Application	147483

PROJECT LOCATION	COORDINATES	GROUND ELEVATION (DATUM)	TOTAL DEPTH
Monroe, Michigan	N 6343.9' E 5203.6'	582.4 ft (NAVD 88)	22.0 (feet)

SURFACE CONDITIONS	COORDINATE SYSTEM	DATE START	DATE FINISHED
Grassy area next to parking lot	Plant	05/19/07	05/23/07

LOGGED BY	CHECKED BY	APPROVED BY
Grainger/Deeker	Dogbey/Meyer	Meyer

SAMPLING							CORING									
SAMPLE TYPE	SAMPLE NUMBER	SET 6 INCHES	2ND 6 INCHES	3RD 6 INCHES	N VALUE	SAMPLE RECOVERY	CORE SIZE	RUN NUMBER	RUN LENGTH	RUN RECOVERY	RQD RECOVERY	PERCENT RECOVERY	RQD	DEPTH (FEET)	SAMPLE TYPE	ELEVATION (FEET)	GRAPHIC LOG	CLASSIFICATION OF MATERIALS	REMARKS
														0		582		Silty GRAVEL with Sand (GM) - About 65% coarse, angular, hard gravel, w/max size 3"; about 20% fine to coarse, angular, hard sand; about 15% fines; yellowish brown; moist; strong reaction w/HCl; homogeneous; (Fill).	Boring advanced w/vacuum excavation.
														1		581			
														2		580			
														3		579			
														4		578			
														5		577		5.3	
SPT	1	1	1	3	4	0.2								6		576		Lean CLAY (CL) - About 86% LL=34, PL=16, no dilatancy fines; about 14% fine to coarse, angular sand; brown; soft; moist; strong reaction w/HCl; (Fill).	Refusal to vacuum excavation @ 5.0'. Below 5.0', continued w/4¼" ID, 8" OD hollow stem augers. SPT performed w/D-50 automatic hammer.
														7		575			
														8		574			
														9		573			
														10		572			PP = 1.0 TSF TV = 0.6 TSF
TW	2	-	-	-	-	2.0								11		571			
														12		570			
														13		569			
														14		568		14.3	
														15				Fat CLAY (CH) - About 95% high plasticity, medium toughness, no dilatancy, high dry strength fines;	

5/20/2008 1:57 PM DTE-Fermi 3

BLACK & VEATCH

BORING LOG

BORING NO. MW-386S

CLIENT	PROJECT	PROJECT NO.
Detroit Edison	Fermi 3 COL Application	147483

PROJECT LOCATION	COORDINATES	GROUND ELEVATION (DATUM)	TOTAL DEPTH
Monroe, Michigan	N 6343.9' E 5203.6'	582.4 ft (NAVD 88)	22.0 (feet)

SURFACE CONDITIONS	COORDINATE SYSTEM	DATE START	DATE FINISHED
Grassy area next to parking lot	Plant	05/19/07	05/23/07

LOGGED BY	CHECKED BY	APPROVED BY
Grainger/Deeken	Dogbey/Meyer	Meyer

SAMPLING: SAMPLE TYPE	SAMPLE NUMBER	SET 6 INCHES	2ND 6 INCHES	3RD 6 INCHES	N VALUE	SAMPLE RECOVERY	CORING: CORE SIZE	RUN NUMBER	RUN LENGTH	RUN RECOVERY	RQD RECOVERY	PERCENT RECOVERY	RQD	DEPTH (FEET)	ELEVATION (FEET)	CLASSIFICATION OF MATERIALS	REMARKS
SPT	3	WOH	2	2	4	1.5								15	567	about 5% fine to coarse, subangular sand; gray; moist; weak reaction w/HCl.	PP = 2.0 TSF
														16	566		
														17	565		
														18	564		
														19	563	19.0 Lean CLAY (CL) - About 85% low plasticity, high toughness, no dilatancy fines; about 15% fine to coarse, subangular sand; dark yellowish brown; hard; moist; strong reaction w/HCl.	
														20	562		
SPT	4	3	8	9	17	1.5								21	561		
														22	560		Bottom of boring @ 22.0'. Water level @ 15.2' @ completion of drilling. Monitoring well installed on 05/23/07.
														23	559		
														24	558		
														25	557		
														26	556		
														27	555		
														28	554		
														29	553		
														30			

BLACK & VEATCH

BORING LOG

BORING NO. MW-387D

SHEET 1 OF 7

CLIENT	PROJECT	PROJECT NO.
Detroit Edison	Fermi 3 COL Application	147483

PROJECT LOCATION	COORDINATES	GROUND ELEVATION (DATUM)	TOTAL DEPTH
Monroe, Michigan	N 6660.2' E 4150.1'	579.7 ft (NAVD 88)	103.5 (feet)

SURFACE CONDITIONS	COORDINATE SYSTEM	DATE START	DATE FINISHED
Graveled area	Plant	05/17/07	05/20/07

LOGGED BY	CHECKED BY	APPROVED BY
Grainger/Deeken	Meyer	Meyer

SAMPLING							CORING										
SAMPLE TYPE	SAMPLE NUMBER	SET 6 INCHES	2ND 6 INCHES	3RD 6 INCHES	N VALUE	SAMPLE RECOVERY	CORE SIZE	RUN NUMBER	RUN LENGTH	RUN RECOVERY	RQD RECOVERY	PERCENT RECOVERY	RQD	DEPTH (FEET)	SAMPLE TYPE	ELEVATION (FEET)	GRAPHIC LOG
														0		579	
														1			
														2		578	
														3		577	
														4		576	
														5		575	
S	1									5.0			3.8	6		574	
														7		573	
														8		572	
														9		571	
														10		570	
S	2									10.0			4.6	11		569	
														12		568	
														13		567	
														14		566	
														15		565	

CLASSIFICATION OF MATERIALS

BOULDERS - About 50% angular, elongated, very hard boulders; about 25% angular, elongated, very hard cobbles; about 20% fine to coarse subrounded, elongated, hard sand; about 5% fines; pinkish gray; loose; strong reaction w/HCl; homogeneous; (Fill).

12.0

ORGANIC Soil (OL) s - About 100% low plasticity, low toughness, slow dilatancy, low dry strength fines; dark gray; soft; wet; no reaction w/HCl; w/ peat

13.0

Lean CLAY (CL) - About 95% medium plasticity, medium toughness, no dilatancy, high dry strength fines; about 5% fine rounded sand; medium dark gray; soft; moist; no reaction w/HCl; homogeneous; (Lacustrine Deposit).

REMARKS

Boring advanced w/vacuum excavation.

Refusal to vacuum excavation @ 5.0'. Below 5.0' continued w/4" ID sonic continuous sampler w/ nominal 6" temporary steel casing advanced w/sampler.

PP = 0.75 TSF @ 14.5'

5/20/2008 1:34 PM DTE-Fermi 3

BLACK & VEATCH

BORING LOG

BORING NO. MW-387D

CLIENT	PROJECT	PROJECT NO.
Detroit Edison	Fermi 3 COL Application	147483

PROJECT LOCATION	COORDINATES	GROUND ELEVATION (DATUM)	TOTAL DEPTH
Monroe, Michigan	N 6660.2' E 4150.1'	579.7 ft (NAVD 88)	103.5 (feet)

SURFACE CONDITIONS	COORDINATE SYSTEM	DATE START	DATE FINISHED
Graveled area	Plant	05/17/07	05/20/07

LOGGED BY	CHECKED BY	APPROVED BY
Geofor Grainger/Deeken DD.	Meyer EM	Meyer EM

SAMPLING								CORING									
SAMPLE TYPE	SAMPLE NUMBER	SET 6 INCHES	2ND 6 INCHES	3RD 6 INCHES	N VALUE	SAMPLE RECOVERY		CORE SIZE	RUN NUMBER	RUN LENGTH	RUN RECOVERY	RQD RECOVERY	PERCENT RECOVERY	RQD	DEPTH (FEET)	SAMPLE TYPE	ELEVATION (FEET)	GRAPHIC LOG	CLASSIFICATION OF MATERIALS	REMARKS
											15.0				15					
															16		564		grades very soft @ 16.0'	
																			16.6	
															17		563		Lean CLAY (CL) - About 95% medium plasticity, medium toughness, slow dilatancy, high dry strength fines; about 5% fine; rounded; hard sand; light olive gray & dark yellowish brown; firm; moist; strong reaction w/HCl; laminated; (Glacial Till).	
S	3					5.0									18		562			
																			fine sand layer 18.0' - 18.2'	
															19		561		grades dark yellowish brown @ 18.2'	
																	560			
															20				20.0	
											20.0						559		Lean CLAY with Sand (CL) - About 75% medium plasticity, medium toughness, slow dilatancy, very high dry strength fines; about 15% fine to coarse, rounded, hard sand; about 10% fine to coarse, rounded to angular hard gravel; dark gray; hard; moist; strong reaction w/HCl; homogeneous; (Glacial Till).	
															21					
																	558			
S	4					5									22					
																	557			
															23				dark gray & dark yellowish brown, laminated @ 22.0-23.0'	
																	556			
															24					
																	555			
											25.0				25					
																	554			
															26				grades w/ gravel lenses & cobbles; angular	Below 26' to 30.7' description based on photo review
																	553			
															27					
S	5					5											552			
															28					
																	551			
															29					
																	550			
															30					

BLACK & VEATCH

BORING LOG

BORING NO. MW-387D

CLIENT	PROJECT	PROJECT NO.
Detroit Edison	Fermi 3 COL Application	147483

PROJECT LOCATION	COORDINATES	GROUND ELEVATION (DATUM)	TOTAL DEPTH
Monroe, Michigan	N 6660.2' E 4150.1'	579.7 ft (NAVD 88)	103.5 (feet)

SURFACE CONDITIONS	COORDINATE SYSTEM	DATE START	DATE FINISHED
Graveled area	Plant	05/17/07	05/20/07

LOGGED BY	CHECKED BY	APPROVED BY
Ed for Grainger/Deeken DD.	Meyer EM	Meyer EM

SAMPLING							CORING									
SAMPLE TYPE	SAMPLE NUMBER	SET 6 INCHES	2ND 6 INCHES	3RD 6 INCHES	N VALUE	SAMPLE RECOVERY	CORE SIZE	RUN NUMBER	RUN LENGTH	RUN RECOVERY	RQD RECOVERY	PERCENT RECOVERY	RQD	DEPTH (FEET)	SAMPLE TYPE	ELEVATION (FEET)	GRAPHIC LOG	CLASSIFICATION OF MATERIALS	REMARKS
														30					
										30.7						549		30.7	Set nominal 6" temporary steel casing to 30.0'. Below 30.7' continued w/ triple tube wire line core barrel w/diamond bit using water as drilling fluid. Core box #1 starts @ 30.7'. About 10% drill water return @ 33'. About 90% return thereafter.
PQ	1	2.3							2.3		0.0	100	0	31		548		DOLOMITE; medium light gray; blocky; very fine grained; slightly weathered; strong; moderately hard; thin bedded; slightly pitted; (Bass Islands Group). 90°,J,N,No,No,Pl,SR @ 30.2'-33.8' 60°,J, MW, No, No, Pl,R @ 31.0'	
														32		547			
										33.0				33		546		5°,J,N,Cl,Sp,Pl,SR @ 33.2', 33.8'	
PQ	2	5.0							5.0		2.0	100	40	34		545			
														35		544		90°,J,N,No,No,Pl,SR @ 35.3-36.0' 5°,J,N,Cl,Sp,Pl,SR @ 35.4', 36.1'	
														36		543			
														37		542		5°,J,N,Cl,Sp,Pl,SR @ 37.2' grades thick bedded @ 37.5'	
										38.0				38		541		90°,J,N,No,No,Pl,SR @ 39.4-40.0', 40.2-42.5'	
														39		540		5°,J,N,Cl,Sp,Pl,SR @ 38.5' grades light brown @ 38.5' 5°,J,N,Cl,Sp,Pl,SR @ 38.9'	
														40		539		90°,J,N,No,No,Pl,SR @ 39.4-40.0'	
PQ	3	5.5							5.2		1.4	95	25	41		538		1" black shale band @ 40.0' 5°,J,N,Cl,Sp,Pl,SR @ 40.0' 90°,J,N,No,No,Pl,SR @ 40.2-42.5' 5°,J,N,Cl,Sp,Pl,SR @ 41.0' 0°,B,N,Cl,Pa,Pl,SR @ 40.0', 41.0'	Core box #2 starts @ 40.7'.
														42		537			
														43		536		90°,J,N,No,No,Pl,SR @ 43.0-44.1' 0°,B,N,Cl,Pa,Pl,SR @ 43.1',43.3', 43.6', 43.9', 44.1', 44.3', 44.5'	
										43.5				44		535			
														45					

BLACK & VEATCH

BORING LOG

BORING NO. MW-387D

CLIENT	PROJECT	PROJECT NO.
Detroit Edison	Fermi 3 COL Application	147483

PROJECT LOCATION	COORDINATES	GROUND ELEVATION (DATUM)	TOTAL DEPTH
Monroe, Michigan	N 6660.2' E 4150.1'	579.7 ft (NAVD 88)	103.5 (feet)

SURFACE CONDITIONS	COORDINATE SYSTEM	DATE START	DATE FINISHED
Graveled area	Plant	05/17/07	05/20/07

LOGGED BY	CHECKED BY	APPROVED BY
Grainger/Deeken	Meyer	Meyer

SAMPLING							CORING									
SAMPLE TYPE	SAMPLE NUMBER	SET 6 INCHES	2ND 6 INCHES	3RD 6 INCHES	N VALUE	SAMPLE RECOVERY	CORE SIZE	RUN NUMBER	RUN LENGTH	RUN RECOVERY	RQD RECOVERY	PERCENT RECOVERY	RQD	DEPTH (FEET)	SAMPLE TYPE	ELEVATION (FEET)	GRAPHIC LOG	CLASSIFICATION OF MATERIALS	REMARKS
														45					
PQ	4								5.0	5.0	3.1	100	62	46		534		35°,J,VN,No,No,St,R @ 45.4' 0°,B,N,Cl,Pa,Pl,SR @ 45.7',45.9' 90°,J,N,No,No,Pl,SR @ 45.7-45.9'	
														47		533			
														48		532		0°,B,N,Cl,Pa,Pl,SR @ 47.4', 47.6'	
			48.5											49		531		0°,B,N,Cl,Pa,Pl,SR @ 48.7', 49.2'	
PQ	5								5.0	5.0	2.8	100	56	50		530		35°,J,VN,No,No,St,R @ 50.0'	Core box #3 starts @ 50.0'.
														51		529		0°,B,N,Cl,Pa,Pl,SR @ 51.0', 51.2', 51.3' 35°,J,VN,No,No,St,R @ 51.4',51.9'	
														52		528		51.9 DOLOMITE; dark gray/brown; vuggy; very fine grained; moderately weathered; moderately hard; medium bedded; w/ calcite inclusions at 53.4'; (Bass Islands Group). 35°,J,VN,No,No,St,R @ 52.1', 52. 5'	
														53		527		0°,B,N,Cl,Pa,Pl,SR @ 53.0'	
			53.5											54		526		2" black shale band @ 53.9' 54.3	
PQ	6								5.0	5.0	2.5	100	50	55		525		DOLOMITE; medium light gray; vuggy; very fine grained; slightly weathered; strong; moderately hard; (Bass Islands Group).	
														56		524		0°,B,MW,Cl,Pa,Pl,R @ 55.9', 56.1', 56.4', 56.6', 56.8', 56.9'	
														57		523		highly fractured @ 56.6-57.0'	
														58		522		0°,B,MW,Cl,Pa,Pl,R @ 57.1'	
			58.5											59		521		0°,B,MW,Cl,Pa,Pl,R @ 58.0'	
														60		520		highly fractured w/ black shale & calcite fragments @ 58.7-60.0'	

BLACK & VEATCH

BORING LOG

BORING NO. MW-387D

CLIENT	PROJECT	PROJECT NO.
Detroit Edison	Fermi 3 COL Application	147483

PROJECT LOCATION	COORDINATES	GROUND ELEVATION (DATUM)	TOTAL DEPTH
Monroe, Michigan	N 6660.2' E 4150.1'	579.7 ft (NAVD 88)	103.5 (feet)

SURFACE CONDITIONS	COORDINATE SYSTEM	DATE START	DATE FINISHED
Graveled area	Plant	05/17/07	05/20/07

LOGGED BY	CHECKED BY	APPROVED BY
Grainger/Deeken	Meyer	Meyer

SAMPLING: SAMPLE TYPE	SAMPLE NUMBER	SET 6 INCHES	2ND 6 INCHES	3RD 6 INCHES	N VALUE	SAMPLE RECOVERY	CORING: CORE SIZE	RUN NUMBER	RUN LENGTH	RUN RECOVERY	RQD RECOVERY	PERCENT RECOVERY	RQD	DEPTH (FEET)	SAMPLE TYPE	ELEVATION (FEET)	GRAPHIC LOG	CLASSIFICATION OF MATERIALS	REMARKS
														60		519		60.0 DOLOMITE; light gray; very fine grained; slightly weathered; very strong; moderately hard; (Bass Islands Group). vuggy up to ¼" @ 60.4-60.9' 90°,J,N,No,No,Ir,R @ 60.2-61.5'	Core box #4 starts @ 60.0'.
PQ	7	5.0	5.0	3.3	100	66								61		518			
														62		517			
														63		516		90°,J,N,No,No,Ir,R @ 62.7-62.9' 50°,J,MW,Cl,Sp,Pl,SR @ 63.0', 65.0' 0°,B,N,Cl,Pa,Pl,SR @ 64.4', 64.5', 64.6'	
			63.5											64		515		highly fractured w/ calcite fragments @ 63.8-64.4'	
														65		514		0°,B,N,Cl,Pa,Pl,SR @ 65.2', 65.5', 65.8'	
PQ	8	5.0	5.0	0.9	100	18								66		513		90°,J,N,No,No,Ir,R @ 66.0-66.9' 50°,J,MW,Cl,Sp,Pl,SR @ 66.1', 66.8' 0°,B,N,Cl,Pa,Pl,SR @ 66.4', 66.5' ½" clay band @ 66.5'	
														67		512		66.8 DOLOMITE; oolitic; brown; very fine grained; moderately weathered; strong; moderately hard; (Bass Islands Group). 90°,J,N,No,No,Ir,R @ 67.7-68.5'	
			68.5											68		511		68.0 DOLOMITE; light gray; very fine grained; slightly weathered; strong; moderately hard; thin bedded; (Bass Islands Group). brecciated, indurated, & argillaceous @ 68.8-70.5' 50°,J,MW,Cl,Sp,Pl,SR @ 68.1' 0°,B,N,Cl,Pa,Pl,SR @ 68.0', 68.5', 68.7',69.0', 69.9', 70.4', 70.5',70.8'	Core box #5 starts @ 69.0'.
														69		510			
														70		509			
PQ	9	5.0	5.0	2.0	100	40								71		508		60°,J,N,Cl,Pa,Pl,R @ 69.9'	
														72		507		90°,J,VN,No,No,Pl @ 72.0-73.0', 72.8'-73.5' 0°,B,N,Cl,Pa,Pl,SR @ 72.1'	
														73		506		0°,B,N,Cl,Pa,Pl,SR @ 73.1',73.2'	
			73.5											74		505		30°,J,N,Cl,Pa,Pl,R @ 73.8' 0°,B,N,Cl,Pa,Pl,SR @ 74.3'	
														75					

BLACK & VEATCH

BORING LOG

BORING NO. MW-387D

CLIENT	PROJECT	PROJECT NO.
Detroit Edison	Fermi 3 COL Application	147483

PROJECT LOCATION	COORDINATES	GROUND ELEVATION (DATUM)	TOTAL DEPTH
Monroe, Michigan	N 6660.2' E 4150.1'	579.7 ft (NAVD 88)	103.5 (feet)

SURFACE CONDITIONS	COORDINATE SYSTEM	DATE START	DATE FINISHED
Graveled area	Plant	05/17/07	05/20/07

LOGGED BY	CHECKED BY	APPROVED BY
Grainger/Deeken	Meyer	Meyer

SAMPLING							CORING									
SAMPLE TYPE	SAMPLE NUMBER	SET 6 INCHES	2ND 6 INCHES	3RD 6 INCHES	N VALUE	SAMPLE RECOVERY	CORE SIZE	RUN NUMBER	RUN LENGTH	RUN RECOVERY	RQD RECOVERY	PERCENT RECOVERY	RQD	DEPTH (FEET)	SAMPLE TYPE	ELEVATION (FEET)	GRAPHIC LOG	CLASSIFICATION OF MATERIALS	REMARKS
														75					
																504		0°,B,N,Cl,Pa,Pl,SR @ 75.1' highly fractured @ 75.3-76.0'	
							PQ	10	5.0	4.8	0.9	96	18	76				30°,J,N,Cl,Pa,Pl,R @ 76.4' 90°,J,N,Cl,Pa,Pl,R @ 75.1-75.3', 76.0-79.8'	
																503			
														77					
																502		30°,J,N,Cl,Pa,Pl,R @ 77.5', 77.9' 0°,B,N,Cl,Pa,Pl,SR @ 77.6'	
														78					
										78.5						501			Core box #6 starts @ 78.5'.
														79				0°,B,N,Cl,Pa,Pl,SR @ 78.8'	
																		0°,B,N,Cl,Pa,Pl,SR @ 79.3'	
																500		60°,J,N,No,No,Pl,R @ 79.8', 79.9', 80.1'	
														80					
																499			
							PQ	11	5.0	5.0	3.7	100	74	81				vuggy @ 81.0-83.5' 30°,J,N,Cl,Pa,Pl,R @ 80.9'	
																498			
														82				30°,J,N,Cl,Pa,Pl,R @ 81.9'	
																497			
														83				30°,J,N,Cl,Pa,Pl,R @ 82.7'	
										83.5						496		grades thick bedded @ 83.5'	
														84					
																495			
														85					
																494			
							PQ	12	5.0	5.0	4.8	100	96	86				30°,J,N,Cl,Pa,Pl,R @ 86.3'	
																493			
														87					
																492			
														88					Core box #7 starts @ 88'.
										88.5						491		0°,B,N,Cl,Pa,Pl,SR @ 88.4'	
														89					
																490			
														90					

BLACK & VEATCH

BORING LOG

BORING NO. MW-387D

CLIENT	PROJECT	PROJECT NO.
Detroit Edison	Fermi 3 COL Application	147483

PROJECT LOCATION	COORDINATES	GROUND ELEVATION (DATUM)	TOTAL DEPTH
Monroe, Michigan	N 6660.2' E 4150.1'	579.7 ft (NAVD 88)	103.5 (feet)

SURFACE CONDITIONS	COORDINATE SYSTEM	DATE START	DATE FINISHED
Graveled area	Plant	05/17/07	05/20/07

LOGGED BY	CHECKED BY	APPROVED BY
Grainger/Deeken GD for	Meyer EM	Meyer EM

SAMPLING							CORING									
SAMPLE TYPE	SAMPLE NUMBER	SET 6 INCHES	2ND 6 INCHES	3RD 6 INCHES	N VALUE	SAMPLE RECOVERY	CORE SIZE	RUN NUMBER	RUN LENGTH	RUN RECOVERY	RQD RECOVERY	PERCENT RECOVERY	RQD	DEPTH (FEET)	SAMPLE TYPE	ELEVATION (FEET)	GRAPHIC LOG	CLASSIFICATION OF MATERIALS	REMARKS
														90				0°,B,N,Cl,Pa,Pl,SR @ 90.2'	
																489		90°,J,N,Cl,Pa,Pl,R @ 90.6-92.3'	
PQ	13	5.0	5.0	1.5	100	30								91				3" thick clay band @ 91.2'	
																488			
														92				0°,B,N,Cl,Pa,Pl,SR @ 92.3', 92.8', 93.1'	
																487		90°,J,N,Cl,Pa,Pl,R @ 92.6-93.5'	
														93				highly fractured @ 92.9-93.3'	
																		2" shale band @ 92.9'	
			93.5													486		0°,B,N,Cl,Pa,Pl,SR @ 93.4'	
														94					
																485		60°,J,N,Cl,Pa,Pl,R @ 94.5'	
PQ	14	3.5	3.3	1.0	94	29								95					Core barrel blocked @ 95.0'.
																484		60°,J,N,Cl,Pa,Pl,R @ 95.5'	
														96					
																483			
			97.0											97					
PQ	15	1.5	1.5	0.8	100	53										482		0°,B,N,Cl,Pa,Pl,SR @ 97.4', 97.8'	
														98				1" thick clay band @ 97.4'	
			98.5													481		0°,B,N,Cl,Pa,Pl,SR @ 98.4'	Core box #8 starts @ 98.5'.
														99				60°,J,N,Cl,Pa,Pl,R @ 98.5'	
																480		1" thick clay band @ 98.5'	
														100				0°,B,N,Cl,Pa,Pl,SR @ 98.7', 99.0'	
																479			
PQ	16	5.0	5.0	3.2	100	64								101				argillaceous @ 101.0-102.1'	
																478		0°,B,N,Cl,Pa,Pl,SR @ 101.0', 101.2', 101.3'	Bottom of boring @ 103.5'. Water level not recorded. Monitoring well installed on 06/01/07.
														102					
																477			
														103				60°,J,N,Cl,Pa,Pl,R @ 103.0'	
																476			
														104					
																475			
														105					

BLACK & VEATCH

BORING LOG

BORING NO. MW-387S

CLIENT	PROJECT	PROJECT NO.
Detroit Edison	Fermi 3 COL Application	147483

PROJECT LOCATION	COORDINATES		GROUND ELEVATION (DATUM)	TOTAL DEPTH
Monroe, Michigan	N 6665.8'	E 4148.2'	579.3 ft (NAVD 88)	16.2 (feet)

SURFACE CONDITIONS	COORDINATE SYSTEM	DATE START	DATE FINISHED
Mild slope, gravel surface, N 6.0' of MW-387D	Plant	05/31/07	05/31/07

LOGGED BY	CHECKED BY	APPROVED BY
Duncan	Dogbey/Meyer	Meyer

SAMPLING: SAMPLE TYPE | SAMPLE NUMBER | SET 6 INCHES | 2ND 6 INCHES | 3RD 6 INCHES | N VALUE | SAMPLE RECOVERY

CORING: CORE SIZE | RUN NUMBER | RUN LENGTH | RUN RECOVERY | RQD RECOVERY | PERCENT RECOVERY | RQD

DEPTH (FEET)	SAMPLE TYPE	ELEVATION (FEET)	GRAPHIC LOG	CLASSIFICATION OF MATERIALS	REMARKS
0		579		Undifferentiated Overburden See log for MW-387D	Boring advanced w/4" ID sonic continuous sampler w/ nominal 6" temporary steel casing advanced w/sampler.
1		578			
2		577			
3		576			
4		575			
5		574			
6		573			Water encountered @ 6.5'
7		572			
8		571			
9		570			
10		569			
11		568			
12		567			
13		566			
14		565		14.0 Lean CLAY (CL) - About 89% LL=38, PL=14, no dilatancy, high dry strength fines; about 11% sand; dark greenish gray; soft; moist; no reaction w/HCl;	
15					

5/20/2008 1:36 PM DTE-Fermi 3

BLACK & VEATCH

BORING LOG

BORING NO. MW-387S

CLIENT	PROJECT	PROJECT NO.
Detroit Edison	Fermi 3 COL Application	147483

PROJECT LOCATION	COORDINATES	GROUND ELEVATION (DATUM)	TOTAL DEPTH
Monroe, Michigan	N 6665.8' E 4148.2'	579.3 ft (NAVD 88)	16.2 (feet)

SURFACE CONDITIONS	COORDINATE SYSTEM	DATE START	DATE FINISHED
Mild slope, gravel surface, N 6.0' of MW-387D	Plant	05/31/07	05/31/07

LOGGED BY	CHECKED BY	APPROVED BY
Duncan	Dogbey/Meyer	Meyer

SAMPLING							CORING									
SAMPLE TYPE	SAMPLE NUMBER	SET 6 INCHES	2ND 6 INCHES	3RD 6 INCHES	N VALUE	SAMPLE RECOVERY	CORE SIZE	RUN NUMBER	RUN LENGTH	RUN RECOVERY	RQD RECOVERY	PERCENT RECOVERY	RQD	DEPTH (FEET)	SAMPLE TYPE	ELEVATION (FEET)	GRAPHIC LOG	CLASSIFICATION OF MATERIALS	REMARKS
TW	1												1.2	15		564		homogeneous.	TV = 0.85 TSF
														16		563			Bottom of boring @ 16.2'. Water level @ 7.4' on 06/01/07. Monitoring well installed on 06/01/07.
														17		562			
														18		561			
														19		560			
														20		559			
														21		558			
														22		557			
														23		556			
														24		555			
														25		554			
														26		553			
														27		552			
														28		551			
														29		550			
														30					

BLACK & VEATCH

BORING LOG

BORING NO. MW-388S

SHEET 1 OF 1

CLIENT	PROJECT	PROJECT NO.
Detroit Edison	Fermi 3 COL Application	147483

PROJECT LOCATION	COORDINATES	GROUND ELEVATION (DATUM)	TOTAL DEPTH
Monroe, Michigan	N 8082.4' E 2168.8'	574.8 ft (NAVD 88)	6.5 (feet)

SURFACE CONDITIONS	COORDINATE SYSTEM	DATE START	DATE FINISHED
Grassy, level ground surface along fence	Plant	05/30/07	05/30/07

LOGGED BY	CHECKED BY	APPROVED BY
GCO Ohlmacher	GCO Dogbey/Ohlmacher	Meyer EM

SAMPLING							CORING									
SAMPLE TYPE	SAMPLE NUMBER	SET 6 INCHES	2ND 6 INCHES	3RD 6 INCHES	N VALUE	SAMPLE RECOVERY	CORE SIZE	RUN NUMBER	RUN LENGTH	RUN RECOVERY	RQD RECOVERY	PERCENT RECOVERY	RQD	DEPTH (FEET)	ELEVATION (FEET)	CLASSIFICATION OF MATERIALS	REMARKS
SPT	1	2	3	3	6	0.8								0	574	Fat CLAY (CH) - About 100% high plasticity, high toughness, no dilatancy fines; strong brown & gray; firm; moist; no reaction w/HCl; homogeneous; (Lacustine Deposit)	Boring advanced w/4¼" ID, 8" OD hollow stem augers. SPT performed w/D-50 automatic hammer.
														1			
														2	573		
SPT	2	1	2	3	5	0.8								3	572	grades laminated @ 3.5'	
														4	571		
SPT	3	1	2	3/4	5	1.3								5	570		
														6	569		
														7	568		Bottom of boring @ 6.5'. Water not encountered. Monitoring well installed on 05/30/07.
														8	567		
														9	566		
														10	565		
														11	564		
														12	563		
														13	562		
														14	561		
														15	560		

6/3/2008 2:33 PM DTE-Fermi 3

BLACK & VEATCH

BORING LOG

BORING NO. MW-390S
SHEET 1 OF 2

CLIENT	PROJECT	PROJECT NO.
Detroit Edison	Fermi 3 COL Application	147483

PROJECT LOCATION	COORDINATES	GROUND ELEVATION (DATUM)	TOTAL DEPTH
Monroe, Michigan	N 7960.1' E 4245.7'	578.9 ft (NAVD 88)	16.5 (feet)

SURFACE CONDITIONS	COORDINATE SYSTEM	DATE START	DATE FINISHED
Graveled area	Plant	05/16/07	06/01/07

LOGGED BY	CHECKED BY	APPROVED BY
Grainger/Duncan	Dogbey/Meyer EM	Meyer EM

SAMPLING: SAMPLE TYPE	SAMPLE NUMBER	SET 6 INCHES	2ND 6 INCHES	3RD 6 INCHES	N VALUE	SAMPLE RECOVERY	CORING: CORE SIZE	RUN NUMBER	RUN LENGTH	RUN RECOVERY	RQD RECOVERY	PERCENT RECOVERY	RQD	DEPTH (FEET)	SAMPLE TYPE	ELEVATION (FEET)	GRAPHIC LOG	CLASSIFICATION OF MATERIALS	REMARKS
														0				Gravelly COBBLES with Sand - About 50% angular, rounded to flat & elongate, very hard cobbles w/max. size 10"; about 30% fine to coarse, angular, elongate to rounded, hard gravel; about 15% fine to coarse, angular, hard sand; about 5% fines; pinkish gray; medium dense to dense, strong reaction w/HCl; homogeneous; (Fill).	Boring advanced w/vacuum excavation.
														1		578			
														2		577			Water encountered @ 6.0' during vacuum excavation. Vacuum excavation stopped @ 7.0'. Boring collapsed to 5.7'. Water sample collected.
														3		576			
														4		575			
														5		574			
				5.7										6		573			Below 5.7' continued w/4" ID sonic continuous sampler w/ nominal 6" temporary steel casing advanced w/sampler. S1A recovery estimated from unlabeled photo; Identified by G. Duncan who logged below 5.7'.
S	1A						~2							7		572			
														8		571			
														9		570			
																		9.0 — Fat CLAY (CH) - About 100% high plasticity, high toughness, no dilatancy fines; gray; soft; moist; no reaction w/HCl; homogeneous	
														10		569			
														11		568			
S	1			11.0			NR											11.7 —	
														12		567		Lean CLAY with Sand (CL) - About 80% medium to low plasticity, medium toughness, no dilatancy, medium dry strength fines; about 20% fine to coarse, subangular to subrounded, hard sand; reddish brown w/trace of gray; firm; moist; strong reaction w/HCl; homogeneous; (Glacial Till).	
S	2			12.0			NR												
														13		566			
				13.0															
														14		565			
S	3						NR												
														15		564			

5/23/2008 9:46 AM DTE-Fermi 3

BLACK & VEATCH

BORING LOG

BORING NO. MW-390S
SHEET 2 OF 2

CLIENT	PROJECT	PROJECT NO.
Detroit Edison	Fermi 3 COL Application	147483

PROJECT LOCATION	COORDINATES	GROUND ELEVATION (DATUM)	TOTAL DEPTH
Monroe, Michigan	N 7960.1' E 4245.7'	578.9 ft (NAVD 88)	16.5 (feet)

SURFACE CONDITIONS	COORDINATE SYSTEM	DATE START	DATE FINISHED
Graveled area	Plant	05/16/07	06/01/07

LOGGED BY	CHECKED BY	APPROVED BY
Grainger/Duncan	Dogbey/Meyer	Meyer

SAMPLING							CORING									
SAMPLE TYPE	SAMPLE NUMBER	SET 6 INCHES	2ND 6 INCHES	3RD 6 INCHES	N VALUE	SAMPLE RECOVERY	CORE SIZE	RUN NUMBER	RUN LENGTH	RUN RECOVERY	RQD RECOVERY	PERCENT RECOVERY	RQD	DEPTH (FEET)	SAMPLE TYPE	ELEVATION (FEET)	GRAPHIC LOG	CLASSIFICATION OF MATERIALS	REMARKS
														15					
TW	4					0.8				15.7				16		563			TV = 1.6 TSF TW refusal @ 16.5'.
														17		562			Bottom of boring @ 16.5'. Monitoring well installed on 06/01/07. Water level @ 6.2' after completion of monitoring well.
														18		561			
														19		560			
														20		559			
														21		558			
														22		557			
														23		556			
														24		555			
														25		554			
														26		553			
														27		552			
														28		551			
														29		550			
														30		549			

5/23/2008 9:46 AM DTE-Fermi 3

BLACK & VEATCH

BORING LOG

BORING NO. MW-391D

CLIENT	PROJECT	PROJECT NO.
Detroit Edison	Fermi 3 COL Application	147483

PROJECT LOCATION	COORDINATES	GROUND ELEVATION (DATUM)	TOTAL DEPTH
Monroe, Michigan	N 8240.3' E 5237.2'	578.7 ft (NAVD 88)	101.0 (feet)

SURFACE CONDITIONS	COORDINATE SYSTEM	DATE START	DATE FINISHED
Level, gravel surface SE of Cooling Tower	Plant	05/16/07	05/22/07

LOGGED BY	CHECKED BY	APPROVED BY
Grainger/Duncan	Meyer EM	Meyer EM

SAMPLING							CORING										
SAMPLE TYPE	SAMPLE NUMBER	SET 6 INCHES	2ND 6 INCHES	3RD 6 INCHES	N VALUE	SAMPLE RECOVERY	CORE SIZE	RUN NUMBER	RUN LENGTH	RUN RECOVERY	RQD RECOVERY	PERCENT RECOVERY	RQD	DEPTH (FEET)	SAMPLE TYPE	ELEVATION (FEET)	GRAPHIC LOG

CLASSIFICATION OF MATERIALS	REMARKS
BOULDERS - About 50% angular, elongated, very hard boulders; about 20% angular, rounded to elongated, very hard cobbles; about 20% angular, rounded to elongated, hard gravel; about 10% fine to coarse, angular, hard sand; pinkish gray; strong reaction w/HCl; homogeneous; (Fill).	Boring advanced w/vacuum excavation
	Refusal to vacuum excavation @ 3.0'. Below 3.0' continued w/4" ID sonic continuous sampler w/ nominal 6" temporary steel casing advanced w/sampler.

SAMPLE TYPE	SAMPLE NUMBER	RUN LENGTH	RUN RECOVERY	RQD	DEPTH (FEET)	ELEVATION (FEET)
					0	578
					1	
					2	577
					3	576
S	1		3.0	0.0	4	575
					5	574
S	2		5.0	3.0	6	573
					7	572
					8	571
					9	570
S	3		10.0	3.5	10	569
					11	568
					12	567
					13	566
					14	565
					15	564

BLACK & VEATCH

BORING LOG

BORING NO. MW-391D

CLIENT	PROJECT	PROJECT NO.
Detroit Edison	Fermi 3 COL Application	147483

PROJECT LOCATION	COORDINATES	GROUND ELEVATION (DATUM)	TOTAL DEPTH
Monroe, Michigan	N 8240.3' E 5237.2'	578.7 ft (NAVD 88)	101.0 (feet)

SURFACE CONDITIONS	COORDINATE SYSTEM	DATE START	DATE FINISHED
Level, gravel surface SE of Cooling Tower	Plant	05/16/07	05/22/07

LOGGED BY	CHECKED BY	APPROVED BY
Grainger/Duncan	Meyer	Meyer

SAMPLING: SAMPLE TYPE	SAMPLE NUMBER	SET 6 INCHES	2ND 6 INCHES	3RD 6 INCHES	N VALUE	SAMPLE RECOVERY	CORING: CORE SIZE	RUN NUMBER	RUN LENGTH	RUN RECOVERY	RQD RECOVERY	PERCENT RECOVERY	RQD	DEPTH (FEET)	SAMPLE TYPE	ELEVATION (FEET)	GRAPHIC LOG	CLASSIFICATION OF MATERIALS	REMARKS
										15.0				15				grades boulders & glacial till mixture @ 15.0'	
																563			
														16				16.0	
																562		Sandy Lean CLAY (CL) - About 70% fines; about 20% fine to coarse, rounded, hard sand; about 10% fine, rounded, hard gravel; yellowish brown; hard to very hard; moist; strong reaction w/HCl; homogeneous; (Glacial Till).	PP > 4.5 TSF @ 17.0-17.5'
S	4					5.0								17					
																561			
														18					
																560			
														19					
																559			
										20.0				20					
																558			
														21				21.0	
																557		Sandy Lean CLAY (CL) - About 70% medium plasticity, medium toughness, no dilatancy, very high dry strength fines; about 20% fine to coarse, angular to subrounded, hard sand; about 10% angular, rounded, hard gravel; dark gray; hard; moist; strong reaction w/ HCl; homogeneous; (Glacial Till).	
S	5					5.0								22					
																556			PP > 4.5 TSF @ 23.0-24.0'
														23					
																555			
														24					
																554			
										25.0				25					
																553			
														26					
																552			
														27					
S	6					4.7										551			
														28				28.0	
																550		DOLOMITE; gray; blocky; very fine grained; slightly weathered; very strong; hard; pitted; (Bass Islands Group).	
														29					
																549			
														30					

BLACK & VEATCH

BORING LOG

BORING NO. MW-391D

CLIENT	PROJECT	PROJECT NO.
Detroit Edison	Fermi 3 COL Application	147483

PROJECT LOCATION	COORDINATES	GROUND ELEVATION (DATUM)	TOTAL DEPTH
Monroe, Michigan	N 8240.3' E 5237.2'	578.7 ft (NAVD 88)	101.0 (feet)

SURFACE CONDITIONS	COORDINATE SYSTEM	DATE START	DATE FINISHED
Level, gravel surface SE of Cooling Tower	Plant	05/16/07	05/22/07

LOGGED BY	CHECKED BY	APPROVED BY
Grainger/Duncan	Meyer	Meyer

SAMPLING							CORING										
SAMPLE TYPE	SAMPLE NUMBER	SET 6 INCHES	2ND 6 INCHES	3RD 6 INCHES	N VALUE	SAMPLE RECOVERY	CORE SIZE	RUN NUMBER	RUN LENGTH	RUN RECOVERY	RQD RECOVERY	PERCENT RECOVERY	RQD	DEPTH (FEET)	SAMPLE TYPE	ELEVATION (FEET)	GRAPHIC LOG

CLASSIFICATION OF MATERIALS	REMARKS
	Set nominal 6" temporary steel casing to 30.0'. Below 30.1' continued w/triple tube wire line core barrel w/ diamond bit using water as drilling fluid. Core box #1 starts @ 30.1'. Water level @ 5.4' @ start of drilling on 05/21/07.
30.5 DOLOMITE; gray; blocky; micritic; fresh; extremely strong; hard; w/shale, shale veins & partings; tight & irregular joints; (Bass Islands Group).	
grades w/o shale veins; horizontal shale striations @ 31.9'	
shale parting; weathered - 0-10°,B,MW,Fi,Pl,SR @ 31.6'	
shale parting - 0°,B,MW,Fi,Pl,SR @ 33.5'	
0°,J,MW,Cl,Fi,Pl,SR @ 33.9'	
shale parting - 10°,B,MW,Fi,Pl,SR @ 34.5'	
15°,J,MW,Cl,Pa,Ir,R @ 35.4'	
grades very strong; very hard; massive; w/trace pits @ 35.4'	
shale parting - B,MW,Fi,Pl,R @ 36.8',37.4'	
grades extremely strong; w/trace pits & vugs partially filled w/calcite @ 41.4'	
15°,J,T,No,No,Ir,R @ 41.9'	Core box #2 starts @ 41.9'.
0°,J,T,No,No,Ir,R @ 44.9'	

SAMPLE TYPE	SAMPLE NUMBER	SET 6 INCHES	2ND 6 INCHES	3RD 6 INCHES	N VALUE	SAMPLE RECOVERY	CORE SIZE	RUN NUMBER	RUN LENGTH	RUN RECOVERY	RQD RECOVERY	PERCENT RECOVERY	RQD	DEPTH (FEET)	ELEVATION (FEET)
										30.1				30	
							PQ	1	0.9	0.9	0.5	100	56		548
										31.0				31	
															547
														32	
															546
														33	
							PQ	2	5.0	4.7	4.2	94	84		545
														34	
															544
														35	
															543
										36.0				36	
															542
														37	
															541
														38	
							PQ	3	5.0	5.0	5.0	100	100		540
														39	
															539
														40	
															538
										41.0				41	
															537
														42	
															536
														43	
							PQ	4	5.0	5.0	5.0	100	100		535
														44	
															534
														45	

BLACK & VEATCH

BORING LOG

BORING NO. MW-391D

CLIENT	PROJECT	PROJECT NO.
Detroit Edison	Fermi 3 COL Application	147483

PROJECT LOCATION	COORDINATES	GROUND ELEVATION (DATUM)	TOTAL DEPTH
Monroe, Michigan	N 8240.3' E 5237.2'	578.7 ft (NAVD 88)	101.0 (feet)

SURFACE CONDITIONS	COORDINATE SYSTEM	DATE START	DATE FINISHED
Level, gravel surface SE of Cooling Tower	Plant	05/16/07	05/22/07

LOGGED BY	CHECKED BY	APPROVED BY
Grainger/Duncan	Meyer	Meyer

SAMPLING							CORING									
SAMPLE TYPE	SAMPLE NUMBER	SET 6 INCHES	2ND 6 INCHES	3RD 6 INCHES	N VALUE	SAMPLE RECOVERY	CORE SIZE	RUN NUMBER	RUN LENGTH	RUN RECOVERY	RQD RECOVERY	PERCENT RECOVERY	RQD	DEPTH (FEET)	ELEVATION (FEET)	CLASSIFICATION OF MATERIALS	REMARKS
														45	533		
										46.0				46			
														47	532	clay mixed w/rock fragments (highly weathered) @ 47.2-47.5'	
														48	531	shale band; moderately weathered; partially cemented w/calcite @ 48.1-48.2'	
PQ	5	5.0	5.0	4.6	100	92								49	530	0-60°,numerous,J,VN - MW,UK,Ir,R @ 49.0'	
														50	529	0°,B,MW - W,Cl & shale infill,Su,Pa,SR @ 49.6' (completely weathered) 0°,J,N - MW,quartz & Cl,Su,Ir,R @ 50.5' (moderately to completely weathered)	Core box #3 starts @ 49.4'.
														51	528		
										51.0				52	527		
														53	526	0°,J,MW,UK,No,SR @ 52.5' (moderately weathered) highly fractured; gravel size; w/o infilling @ 52.5-52.8' 0°,J,N,UK,No,Pl,SR @ 52.9'	
PQ	6	5.0	5.0	2.6	100	52								54	525	53.0 SHALE; black; highly weathered; very weak; friable; thin bedded; (Bass Islands Group). highly fractured; gravel size; w/o infilling @ 53.0-53.2' 53.5	
														55	524	DOLOMITE; light yellowish brown; very fine grained; moderately weathered with zones of complete weathering & fractures; hard; thin bedded; pitty & vuggy; w/close joint spacing; (Bass Islands Group). highly fractured; gravel size; w/o infilling @ 55.0-55.6' grades gray; fresh; very strong; hard; thick bedded; w/o pits & vugs; joints moderately wide @ 55.6'	
														56	523		
										56.0				57	522		
														58	521		
PQ	7	5.0	5.0	4.5	100	90								59	520	highly fractured; surface stained; partial clay & quartz infilling @ 58.8-59.6'	Core box #4 starts @ 58.5'.
														60	519		

BLACK & VEATCH

BORING LOG

BORING NO. MW-391D

CLIENT	PROJECT	PROJECT NO.
Detroit Edison	Fermi 3 COL Application	147483

PROJECT LOCATION	COORDINATES	GROUND ELEVATION (DATUM)	TOTAL DEPTH
Monroe, Michigan	N 8240.3' E 5237.2'	578.7 ft (NAVD 88)	101.0 (feet)

SURFACE CONDITIONS	COORDINATE SYSTEM	DATE START	DATE FINISHED
Level, gravel surface SE of Cooling Tower	Plant	05/16/07	05/22/07

LOGGED BY	CHECKED BY	APPROVED BY
Graihger/Duncan	Meyer	Meyer

SAMPLING							CORING										
SAMPLE TYPE	SAMPLE NUMBER	SET 6 INCHES	2ND 6 INCHES	3RD 6 INCHES	N VALUE	SAMPLE RECOVERY	CORE SIZE	RUN NUMBER	RUN LENGTH	RUN RECOVERY	RQD RECOVERY	PERCENT RECOVERY	RQD	DEPTH (FEET)	SAMPLE TYPE	ELEVATION (FEET)	GRAPHIC LOG	CLASSIFICATION OF MATERIALS	REMARKS
														60		518			
			61.0											61					
																517		45°,J,N,Qz,Sp,Ir,SR @ 61.7'	
														62		516			
																		weathered shale - 0°,B,Fi,Su,Pl,SR @ 62.7-63.0'	Core loss possibly due to outwashing @ weathered shale.
PQ	8		4.4	2.5	88	50			5.0					63		515		shale partings (slightly weathered) - 0°,B,VN - N,Qz,Pa & Sp,Pl,SR @ 63.2',63.4',63.6',64.0',64.3',64.6',64.8', 64.9',65.1',65.2' 65.3'	
														64		514			
														65		513		65.5	
																		DOLOMITE; argillaceous; light yellowish brown; very fine grained; moderately weathered; w/zones of complete weathering & fractures; hard; thin bedded; pitty & vuggy; w/close joint spacing; (Bass Islands Group).	
			66.0											66		512		shale parting - 0°,B,VN,Pl,SR @ 66.7'	
														67		511		60°,J,VN,Qz & Sd,Fi,Pl & Ir,SR @ 67.4'	
														68		510			
PQ	9		5.0	4.4	100	88			5.0									25°,J,N,No,No,Su,Pl,SR @ 68.4'	
														69		509			Core box #5 starts @ 69.1'.
														70		508		0°,J,N,No,No,Su,Pl,SR @ 69.8',69.9' fractured; w/clay infilling @ 70.0-70.3'	
														71		507		25°,J,N,No,No,Pl,SR @ 70.7' clay & gravel band @ 71.1-71.3'	
			71.0																Possible outwash of fines @ 71.5' & 73.8'.
														72		506		fractured w/partial clay infill @ 71.5-72.2' 0° & 40°,intersecting,J,N,R & partially fractured @ 72.5' 70°,J,N,No,No,Su,Pa,Pl,Ir,SR @ 72.9'	
PQ	10		4.7	3.3	94	66			5.0					73		505			
														74		504		fractured w/partial clay infill; highly weathered @ 73.8-75.0'	
														75					

BLACK & VEATCH

BORING LOG

BORING NO. MW-391D

CLIENT	PROJECT	PROJECT NO.
Detroit Edison	Fermi 3 COL Application	147483

PROJECT LOCATION	COORDINATES	GROUND ELEVATION (DATUM)	TOTAL DEPTH
Monroe, Michigan	N 8240.3' E 5237.2'	578.7 ft (NAVD 88)	101.0 (feet)

SURFACE CONDITIONS	COORDINATE SYSTEM	DATE START	DATE FINISHED
Level, gravel surface SE of Cooling Tower	Plant	05/16/07	05/22/07

LOGGED BY	CHECKED BY	APPROVED BY
Grainger/Duncan	Meyer	Meyer

SAMPLING							CORING									
SAMPLE TYPE	SAMPLE NUMBER	SET 6 INCHES	2ND 6 INCHES	3RD 6 INCHES	N VALUE	SAMPLE RECOVERY	CORE SIZE	RUN NUMBER	RUN LENGTH	RUN RECOVERY	RQD RECOVERY	PERCENT RECOVERY	RQD	DEPTH (FEET)	SAMPLE TYPE	ELEVATION (FEET)	GRAPHIC LOG	CLASSIFICATION OF MATERIALS	REMARKS
														75		503			
										76.0				76		502		90°,J,N - T,Ca,Pa,Pl,WA,Ir,SR - R @ 76.1-77.0',77.5-79.0',80.4-81.0'	
														77		501		0°,J,No,No,Pl,SR @ 77.0' 0-10°,several,J,N,No,No,Su,Pl,SR @ 77.2',77.4' 0°,J,VN - N,No,No,Pl,SR @ 77.4',77.8',77.9',78.2',78.4'	
PQ	11	5.0	5.0	3.4	100	68								78		500		clay & gravel band @ 78.7'	
														79		499			Core box #6 starts @ 79.0'.
														80		498		0°,J,VN - N,Su,Ir,SR @ 79.8' 10°,J,MW,Cl,Su & Pa,Ir,R @ 80.1' clay & gravel band @ 80.5'	
										81.0				81		497		fractured, partial clay infill, residual @ 81.0-81.9'	
														82		496			
														83		495		80°,J,N,Cl,Su,Ir,SR @ 82.6' (moderately weathered)	
PQ	12	5.0	4.8	3.8	96	76								84		494		trace pitting; w/partial calcite infilling @ 84.0-86.0'	
														85		493			
														86		492		B,W,Cl,No,No & Su,Pl,SR @ 85.6-85.8' (residual infill possibly washed out) 85.8 DOLOMITE; moderately weathered; w/pits & vugs; (Bass Islands Group). 0 & 45°,J,N,No,No,Ir,R @ 86.7'	
										86.0				87		491		87.5 DOLOMITE; brecciated; broken; partial crystalline infilling; moderately weathered; surface staining; (Bass Islands Group).	
PQ	13	5.0.	4.9	4.2	98	84								88		490		88.0 DOLOMITE; argillaceous; light yellowish brown; very fine grained; moderately weathered; w/zones of complete weathering & fractures; hard; thin bedded; pitty & vuggy; w/close joint spacing; (Bass Islands Group).	
														89		489			Core box #7 starts @ 89.0'.
														90					

BLACK & VEATCH

BORING LOG

BORING NO. MW-391D
SHEET 7 OF 7

CLIENT	PROJECT	PROJECT NO.
Detroit Edison	Fermi 3 COL Application	147483

PROJECT LOCATION	COORDINATES	GROUND ELEVATION (DATUM)	TOTAL DEPTH
Monroe, Michigan	N 8240.3' E 5237.2'	578.7 ft (NAVD 88)	101.0 (feet)

SURFACE CONDITIONS	COORDINATE SYSTEM	DATE START	DATE FINISHED
Level, gravel surface SE of Cooling Tower	Plant	05/16/07	05/22/07

LOGGED BY	CHECKED BY	APPROVED BY
Grainger/Duncan	Meyer	Meyer

SAMPLING							CORING									
SAMPLE TYPE	SAMPLE NUMBER	SET 6 INCHES	2ND 6 INCHES	3RD 6 INCHES	N VALUE	SAMPLE RECOVERY	CORE SIZE	RUN NUMBER	RUN LENGTH	RUN RECOVERY	RQD RECOVERY	PERCENT RECOVERY	RQD	DEPTH (FEET)	SAMPLE TYPE	ELEVATION (FEET)	GRAPHIC LOG	CLASSIFICATION OF MATERIALS	REMARKS
														90				30°,J,N,Ca,Pa,Ir,R @ 88.5' 10°,J,N,Ca,Pa,Pl,R @ 88.9'	
																488		90.0 SHALE; highly to completely weathered; fractured (partial clay infill); thin bedded; (Salina Group - Unit F).	
			91.0											91				90.6 DOLOMITE; argillaceous; dark gray; blocky; micritic; fresh; very strong; very hard; close spaced joints; weak reaction w/HCl; (Salina Group - Unit F). 0-10°,J,N,No,No,Pl,SR @ 91.5', 92.0', 92.2', 94.0', 94.1', 94.5'	
																487			
														92					
																486			
PQ	14	5.0	5.0	3.4	100	68								93					
																485		fractured w/partial clay infill; staining @ 93.6'	
														94					
																484			
														95				fractured w/partial clay infill @ 95.0-95.7'	
																483		95.7 DOLOMITE; pale brown; micritic; fresh; extremely strong; very hard; (Salina Group - Unit F) 90°,J,N,No,No,Pl,SR @ 95.7-96.5'	
			96.0											96				96.4 DOLOMITE; argillaceous; dark gray; blocky; micritic; fresh; very strong; very hard; close spaced joints; (Salina Group - Unit F). 0 & 90°,numerous,J,N,crystalline infill,Pa,Ir @ 96.5-97.6' highly fractured band @ 97' 0°,J,N,Cl,Su,Pl,SR @ 97.6-98.0' (numerous)	Possible outwash of fines @ 97.0' & 98.7'.
																482			
														97					
																481			
														98					
PQ	15	5.0	4.0	1.6	80	32										480		98.7 SHALE; dark gray; fine to coarse grained; completely weathered to residual; friable & soft; w/gravel size fragments; (Salina Group - Unit F).	Core box #8 starts @ 98.8'.
														99					
																479			
														100					
																478			
														101					Bottom of boring @ 101.0'. Water level @ 10.5' @ completion of drilling. Monitoring well installed on 06/02/07.
																477			
														102					
																476			
														103					
																475			
														104					
																474			
														105					

BLACK & VEATCH

BORING LOG

BORING NO. MW-391S

SHEET 1 OF 2

CLIENT	PROJECT	PROJECT NO.
Detroit Edison	Fermi 3 COL Application	147483

PROJECT LOCATION	COORDINATES	GROUND ELEVATION (DATUM)	TOTAL DEPTH
Monroe, Michigan	N 8242.9' E 5232.9'	578.6 ft (NAVD 88)	19.0 (feet)

SURFACE CONDITIONS	COORDINATE SYSTEM	DATE START	DATE FINISHED
Level, gravel base, SE of S Cooling Tower	Plant	05/30/07	05/30/07

LOGGED BY	CHECKED BY	APPROVED BY
Duncan	Meyer	Meyer

SAMPLING: SAMPLE TYPE | SAMPLE NUMBER | SET 6 INCHES | 2ND 6 INCHES | 3RD 6 INCHES | N VALUE | SAMPLE RECOVERY

CORING: CORE SIZE | RUN NUMBER | RUN LENGTH | RUN RECOVERY | RQD RECOVERY | PERCENT RECOVERY | RQD

DEPTH (FEET)	SAMPLE TYPE	ELEVATION (FEET)	GRAPHIC LOG	CLASSIFICATION OF MATERIALS	REMARKS
0		578		Undifferentiated Overburden (See log MW-391D)	Boring advanced w/4" ID sonic continuous sampler w/ nominal 6" temporary steel casing advanced w/sampler.
1		577			
2		576			
3		575			
4		574			
5		573			
6		572			
7		571			
8		570			
9		569			
10		568			
11		567			
12		566			
13		565			
14		564			
15					

6/18/2008 2:41 PM DTE-Fermi 3

BLACK & VEATCH

BORING LOG

BORING NO. MW-391S

SHEET 2 OF 2

CLIENT	PROJECT	PROJECT NO.
Detroit Edison	Fermi 3 COL Application	147483

PROJECT LOCATION	COORDINATES	GROUND ELEVATION (DATUM)	TOTAL DEPTH
Monroe, Michigan	N 8242.9' E 5232.9'	578.6 ft (NAVD 88)	19.0 (feet)

SURFACE CONDITIONS	COORDINATE SYSTEM	DATE START	DATE FINISHED
Level, gravel base, SE of S Cooling Tower	Plant	05/30/07	05/30/07

LOGGED BY	CHECKED BY	APPROVED BY
Duncan	Meyer	Meyer

SAMPLING							CORING										
SAMPLE TYPE	SAMPLE NUMBER	SET 6 INCHES	2ND 6 INCHES	3RD 6 INCHES	N VALUE	SAMPLE RECOVERY	CORE SIZE	RUN NUMBER	RUN LENGTH	RUN RECOVERY	RQD RECOVERY	PERCENT RECOVERY	RQD	DEPTH (FEET)	SAMPLE TYPE	ELEVATION (FEET)	GRAPHIC LOG	CLASSIFICATION OF MATERIALS	REMARKS
														15		563			
										16.0				16		562		—16.0—	
S	1					2.0								17		561		Sandy Lean CLAY (CL) - About 70% medium plasticity, medium toughness, no dilatancy, very high dry strength fines; about 20% fine to coarse, rounded, hard sand; about 10% fine, rounded, hard gravel; yellowish brown; very hard; strong reaction w/HCl; homogeneous; (Glacial Till).	
										18.0				18		560			TV = 2.1 TSF @ 19.0'. Refusal to TW @ 19.0'.
TW	2					0.8								19		559			Bottom of boring @ 19.0'. Water level not recorded. Monitoring well installed on 05/30/07.
														20		558			
														21		557			
														22		556			
														23		555			
														24		554			
														25		553			
														26		552			
														27		551			
														28		550			
														29		549			
														30					

BLACK & VEATCH

BORING LOG

BORING NO. MW-391Sa

SHEET 1 OF 1

CLIENT	PROJECT	PROJECT NO.
Detroit Edison	Fermi 3 COL Application	147483

PROJECT LOCATION	COORDINATES	GROUND ELEVATION (DATUM)	TOTAL DEPTH
Monroe, Michigan	N 8242.9' E 5232.9'	578.6 ft (NAVD 88)	6.0 (feet)

SURFACE CONDITIONS	COORDINATE SYSTEM	DATE START	DATE FINISHED
Level, gravel base, SE of S Cooling Tower	Plant	05/22/07	05/22/07

LOGGED BY	CHECKED BY	APPROVED BY
Duncan	Meyer EM	Meyer EM

SAMPLING								CORING									
SAMPLE TYPE	SAMPLE NUMBER	SET 6 INCHES	2ND 6 INCHES	3RD 6 INCHES	N VALUE	SAMPLE RECOVERY		CORE SIZE	RUN NUMBER	RUN LENGTH	RUN RECOVERY	RQD RECOVERY	PERCENT RECOVERY	RQD	DEPTH (FEET)	ELEVATION (FEET)	GRAPHIC LOG	CLASSIFICATION OF MATERIALS	REMARKS
SPT	1	12	17	8	25	0.8									0	578		Poorly graded GRAVEL with Sand (GP) - About 90% fine to coarse, subangular to angular hard gravel; about 10% fine sand; very dark gray; medium dense; dry to moist; weak reaction w/HCl; w/trace of organics; (Fill).	Boring advanced w/4¼" ID, 8" OD hollow stem augers w/tricone center plug. SPT performed w/BK-81 automatic hammer.
															1	577		0.3 Undifferentiated Overburden (See Log for MW-391D)	
SPT	2	6	7	7	14	0.6									2	576			Very hard drilling. Had to shift rig to maintain vertical auger alignment.
SPT	3	6	14	21	35	0.5									3	575			
SPT	4	11	24	66	90	0.7									4	574			
															5	573			Refusal to augers @ 6.0'.
															6	572			Bottom of boring @ 6.0'. Water not encountered. Boring discontinued due to inability to drill vertically through boulders and damage to drilling tools.
															7	571			
															8	570			
															9	569			
															10	568			
															11	567			
															12	566			
															13	565			
															14	564			
															15				

BLACK & VEATCH

BORING LOG

BORING NO. MW-393D

SHEET 1 OF 11

CLIENT	PROJECT	PROJECT NO.
Detroit Edison	Fermi 3 COL Application	147483

PROJECT LOCATION	COORDINATES	GROUND ELEVATION (DATUM)	TOTAL DEPTH
Monroe, Michigan	N 9367.4' E 2922.8'	576.6 ft (NAVD 88)	150.0 (feet)

SURFACE CONDITIONS	COORDINATE SYSTEM	DATE START	DATE FINISHED
Level; at intersection Doxy & N. Bullit, near road edge	Plant	05/03/07	05/10/07

LOGGED BY	CHECKED BY	APPROVED BY
Grainger/Duncan	Meyer	Meyer

SAMPLING							CORING										
SAMPLE TYPE	SAMPLE NUMBER	SET 6 INCHES	2ND 6 INCHES	3RD 6 INCHES	N VALUE	SAMPLE RECOVERY	CORE SIZE	RUN NUMBER	RUN LENGTH	RUN RECOVERY	RQD RECOVERY	PERCENT RECOVERY	RQD	DEPTH (FEET)	SAMPLE TYPE	ELEVATION (FEET)	GRAPHIC LOG	CLASSIFICATION OF MATERIALS	REMARKS
SPT	1	2	13	12	25	0.6								0		576		Poorly graded GRAVEL with Silt and Sand (GP-GM) - About 70% fine to coarse, angular, hard gravel w/ max. size 1½"; about 20% coarse, angular sand; about 10% fines; pinkish gray; dense; moist; strong reaction w/HCl; homogeneous; (Fill).	Boring advanced w/4½" ID, 8" OD hollow stem augers w/tricone center bit. SPT performed w/ BK81 automatic hammer.
														1		575		1.0	
SPT	2	4	5	5	10	0.7								2		574		Lean CLAY (CL) - About 85% medium plasticity, medium toughness, no dilatancy, medium dry strength fines; about 10% fine to medium, angular to subrounded sand; about 5% organic material; very dark gray; hard; moist; no reaction w/HCl; (Topsoil).	
														3		573		1.7	
TW	3					2.0								4		572		Lean CLAY (CL) - About 90% medium plasticity, medium toughness, no dilatancy, medium to high dry strength fines; about 10% fine to coarse, angular to subrounded, hard sand; grayish brown; hard; dry to moist; strong reaction w/HCl; homogeneous; (Glacial Till).	PP>4.5 TSF @ 4.0'
														5		571		grades w/fine gravel, ½" max. size; & iron-stained fractures w/grayish rock @ 5.0'	
SPT	4	8	13	17	30	1.3								6		570			
TW	5					0.7								7		569			Refusal to thin-walled sampler @ 7.1'
TW	6					1.0								8		568			Refusal to thin-walled sampler @ 8.5'
																			PP>4.5 TSF @ 8.5'
SPT	7	8	14	18	32	1.5								9		567			
														10		566		grades very hard	
																		10.1	
SPT	8	9	31	22	53	0.9								11		565		Fat CLAY (CH) - About 90% high plasticity, high toughness, no dilatancy, very high dry strength fines; about 5% fine to coarse angular to subrounded hard gravel, max. size 1"; about 5% fine to coarse, rounded, hard sand; dark gray; very hard; dry; strong reaction w/HCl; w/trace iron streaks; homogeneous	Water encountered @ 10.7' during drilling. Water level rose to 3.2' when gravel encountered.
														12		564		10.7	
SPT	9	9	5	10	15	0.7								13		563		Poorly graded GRAVEL with Sand (GP) - About 50% fine to coarse, flat & elongated, angular to subangular, hard gravel w/max. size 1"; about 45% angular to subrounded, hard sand; about 5% fines; grayish brown; very dense; strong reaction w/HCl; homogeneous	
																		grades medium dense @ 11.5'	
			14.0											14		562		14.0	Below 14.0', continued w/ triple tube wire
														15				DOLOMITE; grayish brown; micritic to very fine grained; fresh; very strong; hard; w/trace pitting; (Bass Islands Group).	

BLACK & VEATCH

BORING LOG

BORING NO. MW-393D

CLIENT	PROJECT	PROJECT NO.
Detroit Edison	Fermi 3 COL Application	147483

PROJECT LOCATION	COORDINATES	GROUND ELEVATION (DATUM)	TOTAL DEPTH
Monroe, Michigan	N 9367.4' E 2922.8'	576.6 ft (NAVD 88)	150.0 (feet)

SURFACE CONDITIONS	COORDINATE SYSTEM	DATE START	DATE FINISHED
Level; at intersection Doxy & N. Bullit, near road edge	Plant	05/03/07	05/10/07

LOGGED BY	CHECKED BY	APPROVED BY
Co for Grainger/Duncan	Meyer EM	Meyer EM

SAMPLING: SAMPLE TYPE	SAMPLE NUMBER	SET 6 INCHES	2ND 6 INCHES	3RD 6 INCHES	N VALUE	SAMPLE RECOVERY	CORING: CORE SIZE	RUN NUMBER	RUN LENGTH	RUN RECOVERY	RQD RECOVERY	PERCENT RECOVERY	RQD	DEPTH (FEET)	SAMPLE TYPE	ELEVATION (FEET)	GRAPHIC LOG	CLASSIFICATION OF MATERIALS	REMARKS
PQ	1							1	2.0	1.7	1.7	85	85	15		561		90°,J,T,Qz,Fi,WA,Ir,cemented @ 14.0-15.1' 70°,J,N,No,No,Ir,R @ 14.5' grades dark gray; micritic @ 15.5' parting @ 15.5'	line core barrel w/diamond bit using water as drilling fluid. Core box #1 starts @ 14.0'.
										16.0				16		560		0°,J,N,No,Su,Pl&Ir,SR @ 16.2'	
														17		559		vuggy, partially filled w/quartz @ 16.8-17.3' grades light brownish gray @ 17.3' 0°,J,N,No,Su,Pl,SR @ 17.3'	
PQ	2							2	5.0	5.0	4.8	100	96	18		558			
														19		557		0°,J,N,No,No,Pl&Ir,R @ 18.9',19.0'	
														20		556		0° & 60°,J,N,No,No,Su,Pl&Ir,R @ 20.5'	
										21.0				21		555		grades w/trace vugs w/no infill @ 21.0' 0°,J,N,No,Su,Pl,SR @ 21.0'	
														22		554			
PQ	3							3	5.0	4.5	3.7	90	74	23		553		0° & 90°,J,N,No,Su,Ir,R,vuggy w/no infill @ 23.0'-23.6' grades w/vugs & veins partially filled w/quartz @ 23.3'	@ 23' lost pressure while coring for 6". Core box #2 starts @ 23.0'.
														24		552			
														25		551		3" thin bed of angular & subangular broken fragments of gravel sized rock @ 24.7' grades w/color striations of gray & dark gray @ 24.9' 0°,60° & 90°,J,N,Cl&Sd,Su,Pa,Pl&Ir,R @ 25.1-25.6'	
										26.0				26		550		grades w/no vugs & veins @ 26.0'	50 gallons of drilling water lost @ 26.0'.
														27		549		0°-30°,numerous,J,N,Cl&Sd,Su,Pa,Pl,Ir,R @ 26.0-26.4'	
														28		548			
PQ	4							4	5.0	5.0	3.7	100	74	29		547		60°,J,T,No,No,Ir,VR @ 28.5'	
														30				0°-90°,numerous,J,F,V to MW,Cl&Sd,Su,Pa,Ir,R @ 29.4'-31.5'	

BLACK & VEATCH

BORING LOG

BORING NO. MW-393D
SHEET 3 OF 11

CLIENT	PROJECT	PROJECT NO.
Detroit Edison	Fermi 3 COL Application	147483

PROJECT LOCATION	COORDINATES	GROUND ELEVATION (DATUM)	TOTAL DEPTH
Monroe, Michigan	N 9367.4' E 2922.8'	576.6 ft (NAVD 88)	150.0 (feet)

SURFACE CONDITIONS	COORDINATE SYSTEM	DATE START	DATE FINISHED
Level; at intersection Doxy & N. Bullit, near road edge	Plant	05/03/07	05/10/07

LOGGED BY	CHECKED BY	APPROVED BY
Eco for Grainger/Duncan	Meyer EM	Meyer EM

SAMPLING							CORING									
SAMPLE TYPE	SAMPLE NUMBER	SET 6 INCHES	2ND 6 INCHES	3RD 6 INCHES	N VALUE	SAMPLE RECOVERY	CORE SIZE	RUN NUMBER	RUN LENGTH	RUN RECOVERY	RQD RECOVERY	PERCENT RECOVERY	RQD	DEPTH (FEET)	SAMPLE TYPE	ELEVATION (FEET)	GRAPHIC LOG	CLASSIFICATION OF MATERIALS	REMARKS
														30		546			
										31.0				31		545			Core box #3 starts @ 31.0'.
							PQ	5	3.6	2.8	2.2	78	61	32		544		3/4" band, dark gray & black; highly weathered @ 31.5' 0°-90°,numerous,J,N,Cl,Sd&Qz,Su&Pa,R w/trace of crystalline infilled veins @ 31.6-33.4'	
														33		543			
																		33.4	
														34		542		DOLOMITE; argillaceous; dark gray; porphyritic; very fine grained; moderately weathered; very strong; hard; highly fractured; w/angular to subangular cobble-size fragments, surface staining, vuggy w/ crystalline infill; (Bass Islands Group). possible 0.6' cavity @ 33.0-33.6'	Outwashing of infill possibly occurring between 33.4'-36.7'. Infill, if present, unknown due to outwashing. Cavity estimated using televiewer log.
										34.6				35		541			
							PQ	6	1.4	0.6	0.0	42	0						
										36.0				36		540			
																		36.7	
														37		539		DOLOMITE; grayish brown; micritic to very fine grained; fresh; very strong; hard; w/fractures, slight discoloration; trace vugs w/no infill; (Bass Islands Group). 65°,J,VN,Ca,Pa,Ir,R @ 36.7-37.2' 0°,several,J,VN,Ca,Pa,Ir,R @ 37.2' 70°,J,N,Ca,Pa,Ir,R @ 37.8-38.4' 0°,several,J,N,Ca,Pa,Ir,R @ 38.4' 0°,J,Ca,Pa,Pl&Ir,R @ ~38.4' 0°,J,N,No,No,Pl,SR @ 39.0'	
														38		538			
							PQ	7	5.0	4.8	3.7	96	74	39		537			
														40		536			
										41.0				41		535		0°,J,VN,Cl,Su,Pl,SR @ 41.2', 41.6', 41.8'	
														42		534		60°, J,VN,No,No,Ir,R @ 42.2'	Core box #4 starts @ 42.2'.
														43		533			
							PQ	8	5.0	5.0	4.8	100	96	44		532			
														45					

5/23/2008 4:55 PM DTE-Fermi 3

BLACK & VEATCH

BORING LOG

BORING NO. MW-393D
SHEET 4 OF 11

CLIENT	PROJECT	PROJECT NO.
Detroit Edison	Fermi 3 COL Application	147483

PROJECT LOCATION	COORDINATES	GROUND ELEVATION (DATUM)	TOTAL DEPTH
Monroe, Michigan	N 9367.4' E 2922.8'	576.6 ft (NAVD 88)	150.0 (feet)

SURFACE CONDITIONS	COORDINATE SYSTEM	DATE START	DATE FINISHED
Level; at intersection Doxy & N. Bullit, near road edge	Plant	05/03/07	05/10/07

LOGGED BY	CHECKED BY	APPROVED BY
GEO for Grainger/Duncan	Meyer EM	Meyer EM

SAMPLING							CORING									
SAMPLE TYPE	SAMPLE NUMBER	SET 6 INCHES	2ND 6 INCHES	3RD 6 INCHES	N VALUE	SAMPLE RECOVERY	CORE SIZE	RUN NUMBER	RUN LENGTH	RUN RECOVERY	RQD RECOVERY	PERCENT RECOVERY	RQD	DEPTH (FEET)	SAMPLE TYPE	ELEVATION (FEET)	GRAPHIC LOG	CLASSIFICATION OF MATERIALS	REMARKS
														45		531			
														46		530		46.0 SHALE; residual	
			46.0											47		529		47.0 DOLOMITE; grayish brown; micritic to very fine grained; fresh; very strong; hard; w/fractures; slight discoloration; trace vugs w/no infill; (Bass Islands Group) fractured @ 47.0-47.7'	
							PQ	9	5.0	4.7	2.5	94	50	48		528		30°, J,Su,Ir,R @ 47.7' 0°-90° numerous,J,N-MW,Qz&Cl,Fi,Su,Ir,S @ 47.8-50.4'	
														49		527			
														50		526		interbeds of dolomite & shale; moderately weathered @ 50.0-50.7'	
														51		525		grades gray to dark gray striations @ 50.7'	Core box #5 starts @ 51.0'.
			51.0											52		524			
														53		523		0°-90° numerous,J,N,No,Su,Ir,R @ 52.5-54.7'	
							PQ	10	5.0	4.7	4.3	94	86	54		522		shale parting @ 54.2'	
														55		521		grades gray @ 54.7'	
			56.0											56		520		residual @ 56.0-56.3'	Soft drilling @ 56.0'.
														57		519		45°,J,N,No,Su,Ir,SR @ 57.0-57.5'	
							PQ	11	5.0	4.7	4.3	94	86	58		518		0°,J,N,No,Su,Pl,SR @ 58.4' 90°,J,N,No,Su,Ir,SR @ 58.4-58.7' 30°,J,N,No,Su,Ir,SR @ 58.6'	
														59		517		grades gray to dark gray striations @ 59.0'	
														60					

5/23/2008 4:55 PM DTE-Fermi 3

BLACK & VEATCH

BORING LOG

BORING NO. MW-393D

CLIENT	PROJECT	PROJECT NO.
Detroit Edison	Fermi 3 COL Application	147483

PROJECT LOCATION	COORDINATES	GROUND ELEVATION (DATUM)	TOTAL DEPTH
Monroe, Michigan	N 9367.4' E 2922.8'	576.6 ft (NAVD 88)	150.0 (feet)

SURFACE CONDITIONS	COORDINATE SYSTEM	DATE START	DATE FINISHED
Level; at intersection Doxy & N. Bullit, near road edge	Plant	05/03/07	05/10/07

LOGGED BY	CHECKED BY	APPROVED BY
Grainger/Duncan	Meyer	Meyer

SAMPLING							CORING									
SAMPLE TYPE	SAMPLE NUMBER	SET 6 INCHES	2ND 6 INCHES	3RD 6 INCHES	N VALUE	SAMPLE RECOVERY	CORE SIZE	RUN NUMBER	RUN LENGTH	RUN RECOVERY	RQD RECOVERY	PERCENT RECOVERY	RQD	DEPTH (FEET)	SAMPLE TYPE	ELEVATION (FEET)	GRAPHIC LOG	CLASSIFICATION OF MATERIALS	REMARKS
														60		516		moderately weathered partings @ 60.5'	
										61.0				61		515		grades moderately strong to strong @ 61.5' 45°,several,J,VN,No,Su,Ir,SR @ 61.5-62.6'	Core box #6 starts @ 61.0'.
														62		514		slightly weathered parting @ 62.6'	
							PQ	12	5.0	5.0	4.3	100	86	63		513		0°, J,VN,No,No,Pl,SR @ 63.4', 64.0', 65.0'	
														64		512			
														65		511		grades highly weathered; moderately strong @ 65.5'	
										66.0				66		510		grades slightly weathered; very strong @ 66.5' 70°, J,VN,No,No,Ir,SR @ 66.5'	
														67		509			
							PQ	13	5.0	5.0	4.5	100	90	68		508		30°, J,T,No,No,Ir,SR @ 68.0', 69.5'	
														69		507			
														70		506		grades fresh; gray; extremely strong; hard @ 70.1'	
										71.0				71		505		grades slightly weathered @ 71.0' 90°,J,N,Qz,Cl&Sd,Su,Fi,Ir,R @ 71.0-76.8'	Core box #7 starts @ 71.0'
														72		504			
														73		503			
							PQ	14	5.0	4.2	2.7	84	54	74		502			
														75					

BLACK & VEATCH

BORING LOG

BORING NO. MW-393D

CLIENT	PROJECT	PROJECT NO.
Detroit Edison	Fermi 3 COL Application	147483

PROJECT LOCATION	COORDINATES		GROUND ELEVATION (DATUM)	TOTAL DEPTH
Monroe, Michigan	N 9367.4'	E 2922.8'	576.6 ft (NAVD 88)	150.0 (feet)

SURFACE CONDITIONS	COORDINATE SYSTEM	DATE START	DATE FINISHED
Level; at intersection Doxy & N. Bullit, near road edge	Plant	05/03/07	05/10/07

LOGGED BY	CHECKED BY	APPROVED BY
CEC for Grainger/Donean	Meyer EM	Meyer EM

SAMPLING							CORING									
SAMPLE TYPE	SAMPLE NUMBER	SET 6 INCHES	2ND 6 INCHES	3RD 6 INCHES	N VALUE	SAMPLE RECOVERY	CORE SIZE	RUN NUMBER	RUN LENGTH	RUN RECOVERY	RQD RECOVERY	PERCENT RECOVERY	RQD	DEPTH (FEET)	SAMPLE TYPE	ELEVATION (FEET)	GRAPHIC LOG	CLASSIFICATION OF MATERIALS	REMARKS
														75		501			
										76.0				76		500		0°, J,N,Qz,Cl&Sd,Su,Fi,Ir,R @ 76.5', 76.8'	
														77		499			
														78		498		5" thick highly weathered bed @ 77.6'	
							PQ	15	5.0	5.0	4.6	100	92	79		497			
														80		496		2" highly weathered band @ 79.4'	
										81.0				81		495			Core box #8 starts @ 81.0'.
														82		494		20°,J,N,No,No,Pl,SR @ 81.5' 0°,J,N,No,No,Pl,SR @ 82.0' 45°,J,N,No,No,Ir,SR @ 82.5'	
							PQ	16	5.0	5.0	3.2	100	64	83		493			
														84		492		0°,J,MW,Qz,Cl&Sd,Fi,Pl&Ir,SR @ 83.7', 85.2', 86.0' 90°, J,MW,Qz,Cl&Sd,Fi,Ir,SR @ 83.7-86.0'	
														85		491			
										86.0				86		490			
														87		489		moderately weathered, gravel to cobble size broken rock fragments @ 86.8-87.4'	
														88		488		1" moderately weathered band @ 88.1'	
							PQ	17	5.0	4.6	2.6	92	52	89		487		2½" highly weathered band @ 88.5'	
														90				<1/4" highly weathered partings @ 89.5-90.6'	

BLACK & VEATCH

BORING LOG

BORING NO. MW-393D

CLIENT	PROJECT	PROJECT NO.
Detroit Edison	Fermi 3 COL Application	147483

PROJECT LOCATION	COORDINATES	GROUND ELEVATION (DATUM)	TOTAL DEPTH
Monroe, Michigan	N 9367.4' E 2922.8'	576.6 ft (NAVD 88)	150.0 (feet)

SURFACE CONDITIONS	COORDINATE SYSTEM	DATE START	DATE FINISHED
Level; at intersection Doxy & N. Bullit, near road edge	Plant	05/03/07	05/10/07

LOGGED BY	CHECKED BY	APPROVED BY
EEC for Grainger/Duncan	Meyer Em	Meyer Em

SAMPLING							CORING									
SAMPLE TYPE	SAMPLE NUMBER	SET 6 INCHES	2ND 6 INCHES	3RD 6 INCHES	N VALUE	SAMPLE RECOVERY	CORE SIZE	RUN NUMBER	RUN LENGTH	RUN RECOVERY	RQD RECOVERY	PERCENT RECOVERY	RQD	DEPTH (FEET)	SAMPLE TYPE	ELEVATION (FEET)	GRAPHIC LOG	CLASSIFICATION OF MATERIALS	REMARKS
														90		486			
										91.0				91		485		numerous <2½" highly weathered bands @ 91.2-95.0'	Core box #9 starts @ 91.0'.
														92		484			
							PQ	18	5.0	3.8	2.0	76	40	93		483			
														94		482			
														95		481		highly weathered & fractured; w/residual infill; coarse gravel to cobble size @ 95.0-96.0'	
										96.0				96		480		0°-90°,numerous,J,MW,No,Su,Pl&Ir,SR @ 96.0-101.0'	Water level @ 2.8' prior to drilling on 05/09/07.
														97		479			
														98		478			
							PQ	19	5.0	4.5	2.5	90	50	99		477			
														100		476			
										101.0				101		475			Core box #10 starts @ 101.0'. Possible washout @ 101.0-101.5'. Possible residual & coarse sand washout @ 101.8'.
														102		474		fractured; fine to coarse gravel size @ 101.8-102.0'	
														103		473		<1/4" moderately weathered parting @ 102.8' & 103.5'	
							PQ	20	5.0	3.9	2.9	78	58	104		472		grades vuggy	
														105					

BLACK & VEATCH

BORING LOG

BORING NO. MW-393D
SHEET 8 OF 11

CLIENT	PROJECT	PROJECT NO.
Detroit Edison	Fermi 3 COL Application	147483

PROJECT LOCATION	COORDINATES	GROUND ELEVATION (DATUM)	TOTAL DEPTH
Monroe, Michigan	N 9367.4' E 2922.8'	576.6 ft (NAVD 88)	150.0 (feet)

SURFACE CONDITIONS	COORDINATE SYSTEM	DATE START	DATE FINISHED
Level; at intersection Doxy & N. Bullit, near road edge	Plant	05/03/07	05/10/07

LOGGED BY	CHECKED BY	APPROVED BY
C.C. for Grainger/Duncan	Meyer	Meyer

SAMPLING							CORING							DEPTH (FEET)	SAMPLE TYPE	ELEVATION (FEET)	GRAPHIC LOG	CLASSIFICATION OF MATERIALS	REMARKS
SAMPLE TYPE	SAMPLE NUMBER	SET 6 INCHES	2ND 6 INCHES	3RD 6 INCHES	N VALUE	SAMPLE RECOVERY	CORE SIZE	RUN NUMBER	RUN LENGTH	RUN RECOVERY	RQD RECOVERY	PERCENT RECOVERY	RQD						
														105		471		fine to coarse gravel size rock fragments w/residual infill @ 105.5-106.0'	
										106.0				106		470		grades w/interbeds of weak & highly weathered fractured rock @ 106.0'	Material washed out during drilling of run #21.
							PQ	21	5.0	2.0	1.3	40	26	107		469			
														108		468			
														109		467		109.0 — DOLOMITE; gray; micritic to very fine grained; vuggy; slightly weathered; w/interbeds of weak & highly weathered fractured rock; slightly weathered portion is extremely strong; hard; w/fractures; (Salina Group - Unit F).	Soft drilling @ 109.0-111.0'.
														110		466			
										111.0				111		465			
														112		464			
							PQ	22	5.0	3.5	1.8	70	36	113		463		grades light olive brown w/gray foliation; micritic; very hard; w/trace pits partially infill w/quartz; interbeds of highly weathered fractured rock grade out @ 113.0' 40°,J,N,No,No,Pl,SR @ 113.0', 113.5', 113.7', 114.5', 114.7' bedding & striations dip 40°; fractures perpendicular to bedding @ 113.2' to 115.0'	
														114		462			
														115		461			
										116.0				116		460			Core box #11 starts @ 116.0'
														117		459		residual to highly weathered band; very dark gray @ 117.2'-117.4'	
														118		458		118.2 — DOLOMITE; fresh; extremely strong; hard; w/trace vugs; (Salina Group - Unit F).	
							PQ	23	5.0	5.0	3.0	100	60	119		457		118.8 — DOLOMITE; light olive brown w/gray foliation; micritic; extremely strong; very hard; w/fractures & trace pits partially filled w/quartz; (Salina Group - Unit F).	
														120					

5/23/2008 4:55 PM DTE-Fermi 3

BLACK & VEATCH

BORING LOG

BORING NO. MW-393D
SHEET 9 OF 11

CLIENT	PROJECT	PROJECT NO.
Detroit Edison	Fermi 3 COL Application	147483

PROJECT LOCATION	COORDINATES	GROUND ELEVATION (DATUM)	TOTAL DEPTH
Monroe, Michigan	N 9367.4' E 2922.8'	576.6 ft (NAVD 88)	150.0 (feet)

SURFACE CONDITIONS	COORDINATE SYSTEM	DATE START	DATE FINISHED
Level; at intersection Doxy & N. Bullit, near road edge	Plant	05/03/07	05/10/07

LOGGED BY	CHECKED BY	APPROVED BY
CGO for Grainger/Duncan	Meyer EM	Meyer EM

SAMPLING							CORING									
SAMPLE TYPE	SAMPLE NUMBER	SET 6 INCHES	2ND 6 INCHES	3RD 6 INCHES	N VALUE	SAMPLE RECOVERY	CORE SIZE	RUN NUMBER	RUN LENGTH	RUN RECOVERY	RQD RECOVERY	PERCENT RECOVERY	RQD	DEPTH (FEET)	SAMPLE TYPE	ELEVATION (FEET)	GRAPHIC LOG	CLASSIFICATION OF MATERIALS	REMARKS
														120		456		20°,J,N,No,Su,Ir,R @ 119.0'	
																		119.5	
														121		455		BRECCIA; light yellowish brown & dark gray; weakly/ partially healed; micritic to very coarse grained; moderate to completely weathered; weak to very strong; friable to hard; extremely fractured; angular clasts, strong reaction w/HCl; (Salina Group - Unit F). thin bed; fresh; extremely strong; hard; w/trace vugs @ 120.0-120.5'	
										121.0				122		454			
							PQ	24	5.0	3.8	1.8	76	36	123		453			
														124		452			
																		124.5	
														125		451		DOLOMITE; grayish brown; micritic to very fine grained; extremely strong; hard; highly fractured; w/ angular fragments; trace pits; (Salina Group - Unit F).	
										126.0				126		450			Core box #12 starts @ 126.0'.
														127		449			
							PQ	25	5.0	3.7	2.2	74	44	128		448		128.3	
																		BRECCIA; (Salina Group - Unit F).	
														129		447		129.3	
																		DOLOMITE; light brown; fresh; extremely strong; hard; highly fractured; trace pits (Salina Group - Unit F).	
														130		446		130.5	
										131.0				131		445		CLAYSTONE; dark gray; very fine grained; fresh; very strong; hard; no reaction w/HCl; fractured into irregular conical fragments; (Salina Group - Unit F).	
														132		444		132.3	
							PQ	26	5.0	1.8	1.4	36	28	133		443		BRECCIA; gray; broken; very fine to very coarse grained; fresh; moderately strong; low hardness; strong reaction w/HCl; sand & gravel size clasts; (Salina Group - Unit F).	Core loss due to washout leaving clayey sand & gravel size breccia fragments @ 132.3'.
														134		442			
														135					

5/23/2008 4:55 PM DTE-Fermi 3

BLACK & VEATCH

BORING LOG

BORING NO. MW-393D
SHEET 10 OF 11

CLIENT	PROJECT	PROJECT NO.
Detroit Edison	Fermi 3 COL Application	147483

PROJECT LOCATION	COORDINATES	GROUND ELEVATION (DATUM)	TOTAL DEPTH
Monroe, Michigan	N 9367.4' E 2922.8'	576.6 ft (NAVD 88)	150.0 (feet)

SURFACE CONDITIONS	COORDINATE SYSTEM	DATE START	DATE FINISHED
Level; at intersection Doxy & N. Bullit, near road edge	Plant	05/03/07	05/10/07

LOGGED BY	CHECKED BY	APPROVED BY
Grainger/Duncan	Meyer	Meyer

SAMPLING: SAMPLE TYPE	SAMPLE NUMBER	SET 6 INCHES	2ND 6 INCHES	3RD 6 INCHES	N VALUE	SAMPLE RECOVERY

CORING: CORE SIZE	RUN NUMBER	RUN LENGTH	RUN RECOVERY	RQD RECOVERY	PERCENT RECOVERY	RQD
PQ	27	5.0	4.4	4.2	88	84
PQ	28	5.0	3.1	2.1	62	42
PQ	29	4.0	3.2	3.2	80	80

DEPTH (FEET)	ELEVATION (FEET)	CLASSIFICATION OF MATERIALS	REMARKS
135	441		
136	440		For PQ-27, to improve recovery allowed time to elapse before withdrawing core barrel.
136.0			
137	439		
138	438		
139	437		
140	436		
141	435		Core box #13 starts @ 141.0'.
141.0			
141.7		DOLOMITE; grayish brown; micritic; fresh; very strong; hard; trace pits & vugs; irregular vertical & horizontal fractures; slightly weathered; (Salina Group - Unit F).	
142	434		
142.7		CLAYSTONE; dark gray; very fine grained; (Salina Group - Unit F).	
143	433		
144	432		
145	431		
145.5		BRECCIA; gray; very fine to very coarse grained; fresh; moderately strong; low hardness; massive; strong reaction w/HCl; (Salina Group - Unit F).	
146	430		
146.0			
147	429		
148	428		
149	427		
150			

5/23/2008 4:55 PM DTE-Fermi 3

BLACK & VEATCH

BORING LOG

BORING NO. MW-393D
SHEET 11 OF 11

CLIENT	PROJECT	PROJECT NO.
Detroit Edison	Fermi 3 COL Application	147483

PROJECT LOCATION	COORDINATES		GROUND ELEVATION (DATUM)	TOTAL DEPTH
Monroe, Michigan	N 9367.4'	E 2922.8'	576.6 ft (NAVD 88)	150.0 (feet)

SURFACE CONDITIONS	COORDINATE SYSTEM	DATE START	DATE FINISHED
Level; at intersection Doxy & N. Bullit, near road edge	Plant	05/03/07	05/10/07

LOGGED BY	CHECKED BY	APPROVED BY
Grainger/Duncan	Meyer EM	Meyer EM

SAMPLING							CORING									
SAMPLE TYPE	SAMPLE NUMBER	SET 6 INCHES	2ND 6 INCHES	3RD 6 INCHES	N VALUE	SAMPLE RECOVERY	CORE SIZE	RUN NUMBER	RUN LENGTH	RUN RECOVERY	RQD RECOVERY	PERCENT RECOVERY	RQD	DEPTH (FEET)	SAMPLE TYPE	ELEVATION (FEET)	GRAPHIC LOG	CLASSIFICATION OF MATERIALS	REMARKS
														150		426			Bottom of boring @ 150.0'. Water level not recorded. Monitoring well installed on 06/06/07.
														151		425			
														152		424			
														153		423			
														154		422			
														155		421			
														156		420			
														157		419			
														158		418			
														159		417			
														160		416			
														161		415			
														162		414			
														163		413			
														164		412			
														165					

BLACK & VEATCH

BORING LOG

BORING NO. MW-393S

SHEET 1 OF 1

CLIENT	PROJECT	PROJECT NO.
Detroit Edison	Fermi 3 COL Application	147483

PROJECT LOCATION	COORDINATES	GROUND ELEVATION (DATUM)	TOTAL DEPTH
Monroe, Michigan	N 9360.0' E 2918.2'	576.5 ft (NAVD 88)	9.8 (feet)

SURFACE CONDITIONS	COORDINATE SYSTEM	DATE START	DATE FINISHED
Slight slope		05/06/07	05/06/07

LOGGED BY	CHECKED BY	APPROVED BY
Duncan	Meyer EM	Meyer EM

SAMPLING							CORING									
SAMPLE TYPE	SAMPLE NUMBER	SET 6 INCHES	2ND 6 INCHES	3RD 6 INCHES	N VALUE	SAMPLE RECOVERY	CORE SIZE	RUN NUMBER	RUN LENGTH	RUN RECOVERY	RQD RECOVERY	PERCENT RECOVERY	RQD	DEPTH (FEET)	SAMPLE TYPE	ELEVATION (FEET)	GRAPHIC LOG	CLASSIFICATION OF MATERIALS	REMARKS
														0		576		Undifferentiated Overburden (See Log for MW-393D)	Boring advanced w/4¼" ID, 8" OD hollow stem augers w/center plug.
														1		575			
														2		574			
														3		573			
														4		572			
														5		571			
														6		570			
														7		569			
														8		568			
														9		567			
														10		566			Bottom of boring @ 9.8'. Water not encountered. Monitoring well installed on 05/06/07.
														11		565			
														12		564			
														13		563			
														14		562			
														15					

5/19/2008 5:02 PM DTE-Fermi 3

BLACK & VEATCH

BORING LOG

BORING NO. MW-395D

SHEET 1 OF 7

CLIENT	PROJECT	PROJECT NO.
Detroit Edison	Fermi 3 COL Application	147483

PROJECT LOCATION	COORDINATES	GROUND ELEVATION (DATUM)	TOTAL DEPTH
Monroe, Michigan	N 8900.0' E 4600.1'	577.3 ft (NAVD 88)	101.0 (feet)

SURFACE CONDITIONS	COORDINATE SYSTEM	DATE START	DATE FINISHED
Level grassed area	Plant	05/16/07	05/21/07

LOGGED BY	CHECKED BY	APPROVED BY
Grainger/Duncan	Dogbey/Meyer	Meyer

SAMPLING: SAMPLE TYPE	SAMPLE NUMBER	SET 6 INCHES	2ND 6 INCHES	3RD 6 INCHES	N VALUE	SAMPLE RECOVERY	CORING: CORE SIZE	RUN NUMBER	RUN LENGTH	RUN RECOVERY	RQD RECOVERY	PERCENT RECOVERY	RQD	DEPTH (FEET)	SAMPLE TYPE	ELEVATION (FEET)	GRAPHIC LOG	CLASSIFICATION OF MATERIALS	REMARKS
														0		577		Gravelly COBBLES - About 50% angular, rounded to flat & elongated, very hard cobbles w/max. size 10"; about 30% fine to coarse, angular, elongated to rounded, hard gravel; about 10% fine to coarse angular, hard sand; about 10% fines; pinkish gray; medium dense to dense; strong reaction w/HCl; homogeneous; (Fill).	Boring advanced w/vacuum excavation.
														1		576			
														2		575			
														3		574			
														4		573			
														5		572			Water encountered @ 4.6' during vacuum excavation. Boring collapsed from 7' to 5' after vacuum excavation. Below 5.0' continued w/4¼" ID, 8" OD hollow stem augers w/ tricone center bit.
														6		571			
														7		570			
														8		569			
														9		568		9.0	
SPT	1	2	1	2	3	0.6								10		567		Fat CLAY (CH) - About 100% high plasticity, low toughness, no dilatancy fines; dark gray & olive brown; soft; moist; no odor; no reaction w/HCl; laminated color dark gray & olive brown grades slow dilatancy; moist to wet @ 10.5'	SPT performed w/BK-81 automatic hammer.
SPT	2	1	1	1	3	0.9								11		566			
														12		565		12.0	
TW	3					1.5								13		564		Lean CLAY with Sand (CL) - About 85% low plasticity, medium toughness, slow dilatancy fines; about 15% fine to coarse, rounded & subrounded sand; olive brown; hard; moist; strong reaction w/HCl; homogeneous; (Glacial Till).	
														14		563			TV = 2.0 TSF
SPT	4	5	8	11	19	NR								15					

5/30/2008 12:13 PM DTE-Fermi 3

BLACK & VEATCH

BORING LOG

BORING NO. MW-395D

CLIENT	PROJECT	PROJECT NO.
Detroit Edison	Fermi 3 COL Application	147483

PROJECT LOCATION	COORDINATES	GROUND ELEVATION (DATUM)	TOTAL DEPTH
Monroe, Michigan	N 8900.0' E 4600.1'	577.3 ft (NAVD 88)	101.0 (feet)

SURFACE CONDITIONS	COORDINATE SYSTEM	DATE START	DATE FINISHED
Level grassed area	Plant	05/16/07	05/21/07

LOGGED BY	CHECKED BY	APPROVED BY
Grainger/Duncan	Dogbey/Meyer	Meyer

SAMPLING / CORING	SAMPLE TYPE	SAMPLE NUMBER	SET 6 INCHES	2ND 6 INCHES	3RD 6 INCHES	N VALUE	SAMPLE RECOVERY	CORE SIZE	RUN NUMBER	RUN LENGTH	RUN RECOVERY	RQD RECOVERY	PERCENT RECOVERY	RQD	DEPTH (FEET)	ELEVATION (FEET)	CLASSIFICATION OF MATERIALS	REMARKS
	TW	5					0.5								15	562	grades w/occasional fine gravel @ 15.5'	
															16	561	grades w/about 15-25% sand & gravel; dark grayish brown; very hard	TW sampler refusal @ 16.0'. TV = 2.25 TSF
	SPT	6	26	15	21	36	1.3								17	560		
	TW	7					0.1								18	559		
															19	558		TW sampler refusal @ 18.5'.
	SPT	8	14	20	23	43	1.3										Lean CLAY with Sand (CL) - About 85% low plasticity, medium toughness, slow dilatancy, medium to high dry strength fines; about 15-25% very fine sand to fine gravel; very dark gray; very hard; dry to moist; strong reaction w/HCl; homogeneous	
	SPT	9	6	50/4"		50	0.6								20	557		SPT refusal @ 20.5'.
																	20.5	
	PQ	1	0.5	20.5 0.5	0.5	100	100										DOLOMITE; gray; blocky; micritic; fresh; extremely strong; hard; irregular, tight veins filled w/shale; (Bass Islands Group).	Below 20.5' continued w/triple tube wire line core barrel w/ diamond bit using water as drilling fluid. Core box #1 starts @ 20.5'.
				21.0											21	556	grades massive @ 21.0'	
															22	555		
	PQ	2	5.0	5.0	5.0	100	100								23	554		
															24	553		
															25	552		
				26.0											26	551	grades trace of pitting @ 26.0'	
															27	550		
															28	549		
	PQ	3	5.0	5.0	5.0	100	100								29	548		
																	0°,J,N,No,Su,Ir,SR @ 29.5'	
															30			

BLACK & VEATCH

BORING LOG

BORING NO. MW-395D
SHEET 3 OF 7

CLIENT	PROJECT	PROJECT NO.
Detroit Edison	Fermi 3 COL Application	147483

PROJECT LOCATION	COORDINATES	GROUND ELEVATION (DATUM)	TOTAL DEPTH
Monroe, Michigan	N 8900.0' E 4600.1'	577.3 ft (NAVD 88)	101.0 (feet)

SURFACE CONDITIONS	COORDINATE SYSTEM	DATE START	DATE FINISHED
Level grassed area	Plant	05/16/07	05/21/07

LOGGED BY	CHECKED BY	APPROVED BY
Grainger/Duncan	Dogbey/Meyer	Meyer

SAMPLING							CORING									
SAMPLE TYPE	SAMPLE NUMBER	SET 6 INCHES	2ND 6 INCHES	3RD 6 INCHES	N VALUE	SAMPLE RECOVERY	CORE SIZE	RUN NUMBER	RUN LENGTH	RUN RECOVERY	RQD RECOVERY	PERCENT RECOVERY	RQD	DEPTH (FEET)	ELEVATION (FEET)	CLASSIFICATION OF MATERIALS	REMARKS
														30	547	fractured band; partial clay infill @ 30.0-30.2'	Core box #2 starts @ 30.0'.
										31.0				31	546		
														32	545		
														33	544	0°,J,VN,No,No,Ir @ 32.8'	
PQ	4							4	5.0	4.3	2.5	86	50	34	543	highly fractured; w/residual fines, sand & gravel; highly to completely weathered @ 33.3-33.8', 34.6-36.3' 10°,J,N,residual infill,Su,Pl,SR @ 34.3'	Core loss possibly due to fines washout @ 34.6-36.0'.
														35	542		
										36.0				36	541		
														37	540	highly fractured & weathered; w/thin bed of fractured breccia; interbeds of breccia, dolomite & shale @ 36.7-38.0'	
														38	539	2" band of completely weathered black shale @ 37.9'	
PQ	5							5	5.0	5.0	4.0	100	80	39	538	15°,J,VN,No,No,Ir,R @ 38.3' pitty & vuggy @ 39.0-39.7' 15°,J,N,Cl,Su,Ir,R @ 39.3'	
														40	537		
														41	536	shale parting - 25°,B,Su,Ir,R @ 40.5'	Core box #3 starts @ 41.0'.
										41.0				42	535		
														43	534	shale parting - 0°,B,VN,Pl,SR @ 42.5' 0°,J,T,No,No,Pl,SR @ 43.0'	
PQ	6							6	5.0	5.0	5.0	100	100	44	533		
														45		weathered dolomite & shale partings - 0° & 20°,B,MW, Pl & Ir,R @ 44.7-44.9'	

BLACK & VEATCH **BORING LOG**

CLIENT	PROJECT	PROJECT NO.
Detroit Edison	Fermi 3 COL Application	147483

PROJECT LOCATION	COORDINATES	GROUND ELEVATION (DATUM)	TOTAL DEPTH
Monroe, Michigan	N 8900.0' E 4600.1'	577.3 ft (NAVD 88)	101.0 (feet)

SURFACE CONDITIONS	COORDINATE SYSTEM	DATE START	DATE FINISHED
Level grassed area	Plant	05/16/07	05/21/07

LOGGED BY	CHECKED BY	APPROVED BY
Grainger/Duncan	Dogbey/Meyer	Meyer

SAMPLING							CORING									
SAMPLE TYPE	SAMPLE NUMBER	SET 6 INCHES	2ND 6 INCHES	3RD 6 INCHES	N VALUE	SAMPLE RECOVERY	CORE SIZE	RUN NUMBER	RUN LENGTH	RUN RECOVERY	RQD RECOVERY	PERCENT RECOVERY	RQD	DEPTH (FEET)	SAMPLE TYPE	ELEVATION (FEET)	GRAPHIC LOG	CLASSIFICATION OF MATERIALS	REMARKS
														45		532		0-90°,numerous,J,N,crystalline & Sd,Pa,Ir,SR; & veins filled w/quartz @ 45.2-45.8'	
			46.0											46		531			
														47		530		10°,J,N,No,No,Ir&Pl,SR @ 47.0' (2 joints)	
																		1" fractured band; highly weathered @ 47.5' grades w/shale striation prominent @ 47.6'	
														48		529			
PQ	7	5.0	5.0	5.0	100	100												fractured; highly weathered; no infilling @ 48.7-48.9'	
														49		528		1" highly weathered band @ 49.3' (0°,N,No,Su,Pl,SR @ top & bottom of band)	
														50		527			Core box #4 starts @ 50.1'.
			51.0											51		526		shale parting - 0°,B,T,Fi,Pl,SR @ 51.0', 52.2', 52.4'	
																		1" highly weathered dolomite band, fractured @ 51.4'	
														52		525			
																		grades shale striation less prominent @ 52.4'	
														53		524		0°,numerous,J,N,fines & Sd infill,Pl,SR highly weathered @ 52.8-53.5'	
PQ	8	5.0	5.0	3.8	100	76													
														54		523		0°,J,VN,No,No,Pl,SR @ 53.7'	
														55		522			
			56.0											56		521		shale partings, moderately weathered - 0°,B,VN to N, Sd,Su,SR @ 56.3', 56.4', 57.7', 57.8'	
														57		520			
														58		519			
PQ	9	5.0	5.0	4.8	100	96								59		518			Core box #5 starts @ 59.8'.
														60					

BLACK & VEATCH

BORING LOG

BORING NO. MW-395D

CLIENT	PROJECT	PROJECT NO.
Detroit Edison	Fermi 3 COL Application	147483

PROJECT LOCATION	COORDINATES	GROUND ELEVATION (DATUM)	TOTAL DEPTH
Monroe, Michigan	N 8900.0' E 4600.1'	577.3 ft (NAVD 88)	101.0 (feet)

SURFACE CONDITIONS	COORDINATE SYSTEM	DATE START	DATE FINISHED
Level grassed area	Plant	05/16/07	05/21/07

LOGGED BY	CHECKED BY	APPROVED BY
Grainger/Duncan	Dogbey/Meyer	Meyer

SAMPLING							CORING									
SAMPLE TYPE	SAMPLE NUMBER	SET 6 INCHES	2ND 6 INCHES	3RD 6 INCHES	N VALUE	SAMPLE RECOVERY	CORE SIZE	RUN NUMBER	RUN LENGTH	RUN RECOVERY	RQD RECOVERY	PERCENT RECOVERY	RQD	DEPTH (FEET)	SAMPLE TYPE	ELEVATION (FEET)	GRAPHIC LOG	CLASSIFICATION OF MATERIALS	REMARKS
														60		517			
														61		516		shale parting - 0°,B,N,Pl,SR @ 61.4'	
			61.0											62		515		dolomitic band; crystalline, moderately weathered; 0°,J,N,Pa,Su,Pl,SR @ 62.1'	
PQ	10	5.0	4.6	4.6	92	92								63		514		shale parting, slightly weathered - 0°,B,VN,Pl,SR @ 63.0'	
														64		513		shale parting - 0°,B,T,crystalline infill,R @ 64.4'	
														65		512		15°,several,J,N,Qz,Su,Ir,SR @ 65.3-65.4'	
			66.0											66		511		80°,J,VN,crystalline,Su,Ir,SR @ 66-66.4'	
														67		510		grades argillaceous, pitty & vuggy @ 66.7'	
																		shale parting - 5°,B,T,Su,Pl,SR @ 67.3'	
														68		509		10°,V,T,No,St,R @ 68.1'	
PQ	11	5.0	4.8	4.0	96	80								69		508		shale parting - 10°,B,VN,Pa,Pl,SR @ 69.0' fractured, highly weathered; some clay infill @ 69.0-69.6' vuggy dolomite @ 69.0-69.7'	Core box #6 starts @ 69.4'.
														70		507		fractured; highly weathered; some clay infill @ 70.2'	
																		70.4	
																		SHALE; dolomitic; dark gray & gray, striated w/trace of very pale brown streaks; fissile & platy; highly weathered; residual infill (Salina Group - Unit F).	
			71.0											71		506			
														72		505		grades fresh; extremely strong; hard; massive; moderately wide joint spacing @ 72.0' 0°,J,VN,No,No,Pl,SR @ 72.4', 73.2', 73.9', 74.7'	
														73		504			
PQ	12	5.0	4.8	4.3	96	86								74		503			
														75					

BLACK & VEATCH

BORING LOG

BORING NO. MW-395D

CLIENT	PROJECT	PROJECT NO.
Detroit Edison	Fermi 3 COL Application	147483

PROJECT LOCATION	COORDINATES	GROUND ELEVATION (DATUM)	TOTAL DEPTH
Monroe, Michigan	N 8900.0' E 4600.1'	577.3 ft (NAVD 88)	101.0 (feet)

SURFACE CONDITIONS	COORDINATE SYSTEM	DATE START	DATE FINISHED
Level grassed area	Plant	05/16/07	05/21/07

LOGGED BY	CHECKED BY	APPROVED BY
Grainger/Duncan	Dogbey/Meyer	Meyer

SAMPLING							CORING									
SAMPLE TYPE	SAMPLE NUMBER	SET 6 INCHES	2ND 6 INCHES	3RD 6 INCHES	N VALUE	SAMPLE RECOVERY	CORE SIZE	RUN NUMBER	RUN LENGTH	RUN RECOVERY	RQD RECOVERY	PERCENT RECOVERY	RQD	DEPTH (FEET)	SAMPLE TYPE	ELEVATION (FEET)	GRAPHIC LOG	CLASSIFICATION OF MATERIALS	REMARKS
														75		502		0°,J,VN,No,No,Pl,SR @ 75.3'	
			76.0											76		501		0°,J,VN,No,No,Pl & Ir,SR @ 76.3', 76.7'	
PQ	13	5.0	4.7	2.7	94	54								77		500		76.9 DOLOMITE; light brownish gray; blocky; very fine grained; fresh; extremely strong; hard; thick bedded; (Salina Group - Unit F). 0-45°,numerous,J,MW,crystalline & Cl,Pa,Ir,R @ 76.9', 77.0', 77.9', 78.2' 90°J,N,Cl & crystalline,Pa,Ir,R @ 77.9-78.4' 90°,J,T,H & Qz,Pa,Ir @ 78.1-78.9'	
														78		499			
														79		498		78.2 SHALE; dolomitic; dark gray & gray, striated w/trace of very pale brown partings; blocky; fresh; very strong; hard; w/trace highly weathered partings & bands; (Salina Group - Unit F). 90°,J,N,Cl & crystalline,Pa,Ir,R @ 78.2-78.6' numerous J,VN,No,No,SR @ 78.4-80.4' highly fractured, weathered; some 90° J @ 79.5-80.0'	Core box #7 starts @ 78.7'.
														80		497			
			81.0											81		496			
														82		495		grades vuggy; w/calcite partial infilling @ 82.4' 0°,J,VN,Ca,Pa,Pl,SR @ 82.4', 84.3', 84.5' 0-30°,J,N,Ca,Pa,Ir,SR @ 82.9', 83.3', 84.0', 84.8'	
PQ	14	5.0	5.0	4.6	100	92								83		494			
														84		493		highly weathered band w/Cl & sand infilling @ 84.6' 90°,J,VN,Ca,Pa,Ir,SR @ 84.8-85.4'	
														85		492		0°,J,N,Ca,Pa,Ir,SR @ 85.4'	
			86.0											86		491			
														87		490		0°,J,VN,No,No,Pl,SR @ 86.7' grades completely weathered @ 87.0-89.5'	Possible solutioning through joints @ 87.0 & 90.0'.
														88		489			Possible 1.8' of fines & sand washout @ 86.0-91.0'.
PQ	15	5.0	3.2	1.4	64	28								89		488		weathered rock fractures @ 88.5-90.7'.	
														90				89.5 DOLOMITE; gray; blocky; micritic; fresh; extremely	Core box #8 starts @ 88.0'.

BLACK & VEATCH

BORING LOG

BORING NO. MW-395D

CLIENT	PROJECT	PROJECT NO.
Detroit Edison	Fermi 3 COL Application	147483

PROJECT LOCATION	COORDINATES	GROUND ELEVATION (DATUM)	TOTAL DEPTH
Monroe, Michigan	N 8900.0' E 4600.1'	577.3 ft (NAVD 88)	101.0 (feet)

SURFACE CONDITIONS	COORDINATE SYSTEM	DATE START	DATE FINISHED
Level grassed area	Plant	05/16/07	05/21/07

LOGGED BY	CHECKED BY	APPROVED BY
Grainger/Duncan	Dogbey/Meyer	Meyer

SAMPLING							CORING									
SAMPLE TYPE	SAMPLE NUMBER	SET 6 INCHES	2ND 6 INCHES	3RD 6 INCHES	N VALUE	SAMPLE RECOVERY	CORE SIZE	RUN NUMBER	RUN LENGTH	RUN RECOVERY	RQD RECOVERY	PERCENT RECOVERY	RQD	DEPTH (FEET)	SAMPLE TYPE	ELEVATION (FEET)	GRAPHIC LOG	CLASSIFICATION OF MATERIALS	REMARKS
														90		487		strong; hard; highly fractured; weathered fracture faces; (Salina Group - Unit F).	
			91.0											91		486		grades highly fractured & completely weathered; w/residual infill @ 91'	
														92		485			
														93		484			Possible washout of fines @ 88.5-96.0'.
PQ	16	5.0	1.7	0	34	0								94		483			
														95		482			
			96.0											96		481			Water level @ 5.3' prior to drilling on 05/21/07. Boring @ 96.0'.
														97		480		97.2 SHALE; dolomitic; dark gray; blocky; highly weathered; strong; moderately hard to hard; pitted (vuggy); close joint spacing; highly fractured, 0-90°,numerous,J,N,Cl, Pa & Fi,Pl & Ir,SR to R; (Salina Group - Unit F).	After PQ-16 pulled outer core barrel for repairs.
PQ	17	5.0	3.0	2.8	60	56								98		479			
														99		478			
														100		477			
														101		476			Bottom of boring @ 101.0'. Water level not recorded. Monitoring well installed on 06/01/07.
														102		475			
														103		474			
														104		473			
														105					

5/30/2008 12:13 PM DTE-Fermi 3

BLACK & VEATCH

BORING LOG

BORING NO. MW-395S

SHEET 1 OF 2

CLIENT	PROJECT	PROJECT NO.
Detroit Edison	Fermi 3 COL Application	147483

PROJECT LOCATION	COORDINATES	GROUND ELEVATION (DATUM)	TOTAL DEPTH
Monroe, Michigan	N 8906.2' E 4599.7'	577.3 ft (NAVD 88)	14.4 (feet)

SURFACE CONDITIONS	COORDINATE SYSTEM	DATE START	DATE FINISHED
Level, gravel surface, E of Cooling Towers	Plant	05/30/07	05/30/07

LOGGED BY	CHECKED BY	APPROVED BY
Duncan	Dogbey	Meyer

SAMPLING							CORING									
SAMPLE TYPE	SAMPLE NUMBER	SET 6 INCHES	2ND 6 INCHES	3RD 6 INCHES	N VALUE	SAMPLE RECOVERY	CORE SIZE	RUN NUMBER	RUN LENGTH	RUN RECOVERY	RQD RECOVERY	PERCENT RECOVERY	RQD	DEPTH (FEET)	SAMPLE TYPE	ELEVATION (FEET)	GRAPHIC LOG	CLASSIFICATION OF MATERIALS	REMARKS
														0		577		Undifferentiated Overburden (See log for MW-395D)	Boring advanced w/4" ID sonic continuous sampler w/ nominal 6" temporary steel casing advanced w/sampler.
														1		576			
														2		575			
														3		574			
														4		573			
														5		572			
														6		571			
														7		570			
														8		569			
														9		568			
														10		567			
														11		566			
														12		565			
														13		564			
														14		563			
														15					

5/22/2008 3:07 PM DTE-Fermi 3

BLACK & VEATCH

BORING LOG

BORING NO. MW-395S

CLIENT	PROJECT	PROJECT NO.
Detroit Edison	Fermi 3 COL Application	147483

PROJECT LOCATION	COORDINATES	GROUND ELEVATION (DATUM)	TOTAL DEPTH
Monroe, Michigan	N 8906.2' E 4599.7'	577.3 ft (NAVD 88)	14.4 (feet)

SURFACE CONDITIONS	COORDINATE SYSTEM	DATE START	DATE FINISHED
Level, gravel surface, E of Cooling Towers	Plant	05/30/07	05/30/07

LOGGED BY	CHECKED BY	APPROVED BY
Duncan	EM for Dogbey	Meyer EM

SAMPLING							CORING									
SAMPLE TYPE	SAMPLE NUMBER	SET 6 INCHES	2ND 6 INCHES	3RD 6 INCHES	N VALUE	SAMPLE RECOVERY	CORE SIZE	RUN NUMBER	RUN LENGTH	RUN RECOVERY	RQD RECOVERY	PERCENT RECOVERY	RQD	DEPTH (FEET)	SAMPLE TYPE	ELEVATION (FEET)	GRAPHIC LOG	CLASSIFICATION OF MATERIALS	REMARKS
														15		562			Bottom of boring @ 14.4'. Water level not recorded. Piezometer installed on 05/30/07.
														16		561			
														17		560			
														18		559			
														19		558			
														20		557			
														21		556			
														22		555			
														23		554			
														24		553			
														25		552			
														26		551			
														27		550			
														28		549			
														29		548			
														30					

5/22/2008 3:07 PM DTE-Fermi 3

BLACK & VEATCH

BORING LOG

BORING NO. P-382S

CLIENT	PROJECT	PROJECT NO.
Detroit Edison	Fermi 3 COL Application	147483

PROJECT LOCATION	COORDINATES	GROUND ELEVATION (DATUM)	TOTAL DEPTH
Monroe, Michigan	N 5730.3' E 3132.4'	576.4 ft (NAVD 88)	16.5 (feet)

SURFACE CONDITIONS	COORDINATE SYSTEM	DATE START	DATE FINISHED
Wooded high spot along a gravel road	Plant	05/06/07	05/07/07

LOGGED BY	CHECKED BY	APPROVED BY
Ohlmacher GAO	Meyer EM	Meyer EM

SAMPLING							CORING										
SAMPLE TYPE	SAMPLE NUMBER	SET 6 INCHES	2ND 6 INCHES	3RD 6 INCHES	N VALUE	SAMPLE RECOVERY	CORE SIZE	RUN NUMBER	RUN LENGTH	RUN RECOVERY	RQD RECOVERY	PERCENT RECOVERY	RQD	DEPTH (FEET)	SAMPLE TYPE	ELEVATION (FEET)	GRAPHIC LOG	CLASSIFICATION OF MATERIALS	REMARKS
SPT	1	1	11	31	42	1.3								0		576		SILT (ML) - About 90% low plasticity, low toughness, rapid dilatancy fines; about 10% organics w/tree roots; very dark grayish brown; soft; moist; no reaction w/HCl; homogeneous; (Topsoil-Fill).	Boring advanced w/4¼" ID, 8" OD hollow stem augers. SPT performed w/D-50 automatic hammer.
														0.5					
SPT	2	23	20	15	35	1.3								1		575		Poorly graded GRAVEL with Sand (GP) - About 70% fine to coarse, angular to subangular, hard gravel, max size 1.2", fractured w/3 hammer blows; about 25% fine to coarse, subangular to subrounded, sand; about 5% fines; light gray; dense; moist; strong reaction w/HCl; homogeneous; (Fill).	
														2		574			
														2.5					
SPT	3	6	22	5	27	0.6								3		573		Sandy Lean CLAY (CL) - About 70% medium plasticity, medium toughness, slow dilatancy fines; about 30% fine to coarse, angular to subangular sand; brown; hard; moist; strong reaction w/HCl; homogeneous; (Fill).	
														4		572		grades w/gravel @ 3.5'	
														4.8					
SPT	4	WOH	WOH	2	2	1.0								5		571		ORGANIC Soil (OL) - About 100% medium plasticity, medium toughness, slow dilatancy, fines; black; very soft; moist; no reaction w/HCl; plant fragments; homogeneous; (Peat).	
														5.8					
SPT	5	WOH	WOH	1	1	0.8								6		570		Fat CLAY (CH) - About 100% high plasticity, high toughness, no dilatancy fines; trace sand; dark brown; very soft; moist; no reaction w/HCl; homogeneous; (Lacustrine Deposit).	
														7		569		grades gray @ 6.5'	
																		grades bluish gray; soft @ 7.5'	
SPT	6	WOH	1	2	3	1.3								8		568			
														9		567			
SPT	7	1	2	1	3	1.4								10		566		grades brownish yellow @ 9.5'	
																		grades laminated @ 10.5'	
SPT	8	1	1	3	4	1.5								11		565			
														12		564			
														12.5					
SPT	9	5	10	14	24	1.5								13		563		Sandy SILT (ML) - About 60% medium plasticity, medium toughness, slow dilatancy fines; about 30% fine to coarse, subangular to subrounded sand; about 10% fine to coarse, angular to subangular gravel; dark grayish brown; hard; moist; strong reaction w/HCl; homogeneous; (Glacial Till).	
														14		562			
SPT	10	5	10	15	25	1.1								15					

BLACK & VEATCH

BORING LOG

BORING NO. P-382S
SHEET 2 OF 2

CLIENT	PROJECT	PROJECT NO.
Detroit Edison	Fermi 3 COL Application	147483

PROJECT LOCATION	COORDINATES	GROUND ELEVATION (DATUM)	TOTAL DEPTH
Monroe, Michigan	N 5730.3' E 3132.4'	576.4 ft (NAVD 88)	16.5 (feet)

SURFACE CONDITIONS	COORDINATE SYSTEM	DATE START	DATE FINISHED
Wooded high spot along a gravel road	Plant	05/06/07	05/07/07

LOGGED BY	CHECKED BY	APPROVED BY
Ohlmacher GCO	Meyer EM	Meyer EM

SAMPLING							CORING									
SAMPLE TYPE	SAMPLE NUMBER	SET 6 INCHES	2ND 6 INCHES	3RD 6 INCHES	N VALUE	SAMPLE RECOVERY	CORE SIZE	RUN NUMBER	RUN LENGTH	RUN RECOVERY	RQD RECOVERY	PERCENT RECOVERY	RQD	DEPTH (FEET)	SAMPLE TYPE	ELEVATION (FEET)	GRAPHIC LOG	CLASSIFICATION OF MATERIALS	REMARKS
SPT	11	4	8	12	20	1.5								15		561		grades dark gray @ 15.5'	
														16		560			
														17		559			Bottom of boring @ 16.5'. Water level @ 14' @ completion of drilling. Piezometer installed on 05/07/07.
														18		558			
														19		557			
														20		556			
														21		555			
														22		554			
														23		553			
														24		552			
														25		551			
														26		550			
														27		549			
														28		548			
														29		547			
														30					

BLACK & VEATCH

BORING LOG

BORING NO. P-385D

CLIENT	PROJECT	PROJECT NO.
Detroit Edison	Fermi 3 COL Application	147483

PROJECT LOCATION	COORDINATES	GROUND ELEVATION (DATUM)	TOTAL DEPTH
Monroe, Michigan	N 6201.7' E 4390.0'	580.1 ft (NAVD 88)	102.5 (feet)

SURFACE CONDITIONS	COORDINATE SYSTEM	DATE START	DATE FINISHED
Gravel parking lot near a field		05/07/07	05/09/07

LOGGED BY	CHECKED BY	APPROVED BY
GCO Ohlmacher	Em for GCO Dogbey/Ohlmacher	Meyer EM

SAMPLING: SAMPLE TYPE, SAMPLE NUMBER, SET 6 INCHES, 2ND 6 INCHES, 3RD 6 INCHES, N VALUE, SAMPLE RECOVERY

CORING: CORE SIZE, RUN NUMBER, RUN LENGTH, RUN RECOVERY, RQD RECOVERY, PERCENT RECOVERY, RQD

SAMPLE TYPE	SAMPLE NUMBER	SET 6 INCHES	2ND 6 INCHES	3RD 6 INCHES	N VALUE	SAMPLE RECOVERY	DEPTH (FEET)	ELEVATION (FEET)	CLASSIFICATION OF MATERIALS	REMARKS
S	1					3.0	0	580	Well graded GRAVEL with Sand and Cobbles (GW) - About 55% fine to coarse, angular to subangular, hard gravel; about 30% fine to coarse, subangular to subrounded, sand; about 10% angular to subangular, hard cobbles; about 5% fines; reddish gray; moist; strong reaction w/HCl; homogeneous; (Fill).	Boring advanced w/4" ID sonic continuous sampler w/ nominal 6" temporary steel casing advanced w/sampler.
							1	579		
							2	578		
							3	577		
							4	576		
			5.0				5	575		
S	2					3.0	6	574		
							7	573		
							8	572		
							9	571		
			10.0				10	570		
S	3					2.9	11	569		
							12	568		
							13	567		
							14	566		
							14.3		Lean CLAY (CL) - About 95% medium plasticity, medium toughness, no dilatancy fines; about 5% fine	PP = 0.75 TSF
							15			

5/23/2008 4:15 PM DTE-Fermi 3

BLACK & VEATCH

BORING LOG

BORING NO. P-385D

CLIENT	PROJECT	PROJECT NO.
Detroit Edison	Fermi 3 COL Application	147483

PROJECT LOCATION	COORDINATES	GROUND ELEVATION (DATUM)	TOTAL DEPTH
Monroe, Michigan	N 6201.7' E 4390.0'	580.1 ft (NAVD 88)	102.5 (feet)

SURFACE CONDITIONS	COORDINATE SYSTEM	DATE START	DATE FINISHED
Gravel parking lot near a field		05/07/07	05/09/07

LOGGED BY	CHECKED BY	APPROVED BY
Ohlmacher GCO	Dogbey/Ohlmacher GCO	Meyer EM

SAMPLING							CORING									
SAMPLE TYPE	SAMPLE NUMBER	SET 6 INCHES	2ND 6 INCHES	3RD 6 INCHES	N VALUE	SAMPLE RECOVERY	CORE SIZE	RUN NUMBER	RUN LENGTH	RUN RECOVERY	RQD RECOVERY	PERCENT RECOVERY	RQD	DEPTH (FEET)	SAMPLE TYPE	ELEVATION (FEET)	GRAPHIC LOG	CLASSIFICATION OF MATERIALS	REMARKS
S	4					4.3				15.0				15		565		to coarse, angular to subrounded sand; gray; soft; moist; weak reaction w/HCl; homogeneous; (Lacustrine Deposit).	
														16		564			
														17		563			
														18		562			
														19		561		18.8 Sandy lean CLAY with Gravel (CL) - About 65% medium plasticity, medium toughness, no dilatancy fines; about 15% fine to coarse, rounded to subangular sand; about 15% fine to coarse, rounded to subangular gravel, max. size 1"; about 5% angular, hard cobbles, max. size 4"; gray; firm; moist; strong reaction w/HCl; homogeneous; (Glacial Till).	
S	5					5.8				20.0				20		560			
														21		559			
														22		558		22.0 Gravelly SILT with Sand (ML) - About 65% medium plastic, low toughness, slow dilatancy fines; about 20% fine to coarse, rounded to subangular gravel, max. size 3"; about 10% fine to coarse rounded to subangular sand; about 5% cobbles; gray; firm; moist; strong reaction w/HCl; homogeneous; (Glacial Till).	
														23		557			
														24		556			
														25		555			
S	6					5.0				25.0				26		554			
														27		553			
														28		552			
														29		551			
														30					

BLACK & VEATCH

BORING LOG

BORING NO. P-385D
SHEET 3 OF 7

CLIENT	PROJECT	PROJECT NO.
Detroit Edison	Fermi 3 COL Application	147483

PROJECT LOCATION	COORDINATES	GROUND ELEVATION (DATUM)	TOTAL DEPTH
Monroe, Michigan	N 6201.7' E 4390.0'	580.1 ft (NAVD 88)	102.5 (feet)

SURFACE CONDITIONS	COORDINATE SYSTEM	DATE START	DATE FINISHED
Gravel parking lot near a field		05/07/07	05/09/07

LOGGED BY	CHECKED BY	APPROVED BY
GCC Ohlmacher	Eric GCO Dogbey/Ohlmacher	Meyer EM

SAMPLING: SAMPLE TYPE	SAMPLE NUMBER	SET 6 INCHES	2ND 6 INCHES	3RD 6 INCHES	N VALUE	SAMPLE RECOVERY	CORING: CORE SIZE	RUN NUMBER	RUN LENGTH	RUN RECOVERY	RQD RECOVERY	PERCENT RECOVERY	RQD	DEPTH (FEET)	SAMPLE TYPE	ELEVATION (FEET)	GRAPHIC LOG	CLASSIFICATION OF MATERIALS	REMARKS
										30.0				30		550			
														31		549		DOLOMITE; gray; very fine grained; moderately weathered; extremely strong; moderately hard; banded; fractures filled w/washed-in glacial till; (Bass Islands Group).	
S	7												4.9	32		548			
														33		547		grades highly weathered @ 33'	
														34		546		grades slightly weathered @ 34'	Set nominal 6" temporary steel casing to 33.5'
										35.0				35		545		80°,J,No,No,Pl,SR @ 35.0-35.3'	Below 35.0' continued w/ triple tube wire line core barrel w/diamond bit using water as drilling fluid. Core box #1 starts @ 34.0'. The top 1 foot of the sample in core box #1 is from S7.
														36		544			
PQ	1							1	4.0	4.0	3.7	100	93	37		543		0°,B,T,No,No,Pl,SR @ 36.5' (2 joints) 90°,J,T,No,No,Pl,SR @ 36.6-37.0' 10% vugs filled w/calcite @ 37.1-37.2' 0°,B,T,No,No,Pl,SR @ 37.3'	
														38		542		0°,B,T,No,No,Pl,SR @ 38.3' 0°,B,T,No,No,Pl,SR @ 38.5' 0°,B,T,No,No,Pl,SR @ 38.7'	
										39.0				39		541		90°,J,T,No,No,Pl,SR @ 39.0-39.7'	
														40		540		82°,J,T,No,No,Pl,SR @ 39.8-40.1'	
														41		539		0°,B,T,No,No,Pl,SR @ 40.3' 35°,J,T,No,No,Pl,SR @ 40.3-40.5' 90°,J,T,No,No,Pl,SR @ 40.3-42.1'	
PQ	2							2	5.0	5.0	3.0	100	60	42		538		90°,J,T,No,No,Pl,SR @ 41.8-42.8'	
														43		537		0°,B,T,No,No,Pl,SR @ 42.9', 43.1', 43.2', 43.7'	
										44.0				44		536			Core box #2 starts @ 43.7'. Short run. Core stuck in barrel.
														45				10°,J,VN,No,No,Pl,SR @ 44.4' grades 10% vugs @ 44.5'	

5/23/2008 4:15 PM DTE-Fermi 3

BLACK & VEATCH

BORING LOG

BORING NO. P-385D
SHEET 4 OF 7

CLIENT	PROJECT	PROJECT NO.
Detroit Edison	Fermi 3 COL Application	147483

PROJECT LOCATION	COORDINATES	GROUND ELEVATION (DATUM)	TOTAL DEPTH
Monroe, Michigan	N 6201.7' E 4390.0'	580.1 ft (NAVD 88)	102.5 (feet)

SURFACE CONDITIONS	COORDINATE SYSTEM	DATE START	DATE FINISHED
Gravel parking lot near a field		05/07/07	05/09/07

LOGGED BY	CHECKED BY	APPROVED BY
Ohlmacher	Dogbey/Ohlmacher	Meyer

SAMPLING: SAMPLE TYPE	SAMPLE NUMBER	SET 6 INCHES	2ND 6 INCHES	3RD 6 INCHES	N VALUE	SAMPLE RECOVERY	CORING: CORE SIZE	RUN NUMBER	RUN LENGTH	RUN RECOVERY	RQD RECOVERY	PERCENT RECOVERY	RQD	DEPTH (FEET)	SAMPLE TYPE	ELEVATION (FEET)	GRAPHIC LOG	CLASSIFICATION OF MATERIALS	REMARKS
PQ	3								3.6	3.6	2.9	100	81	45		535		grades 0% vugs @ 44.9' 22°,J,VN,UK,Pa,Pl,S @ 45.0',45.1 65°,J,No,No,Pl,SR @ 45.2-45.9'	
														46		534			
														47		533		70°,J,T,No,No,Pl,SR @ 46.7-47.8'	
PQ	4								1.4	47.6 1.4	1.3	100	93	48		532		50°,J,T,No,No,Pl,SR @ 47.6-47.9' 75°,J,T,No,No,WA,SR @ 47.8-49.8' grades dark gray and gray alternating bands @ 47.9'	
PQ	5								5.0	49.0 4.3	2.0	86	40	49		531		grading to 5% vugs @ 49.5' 60°,J,UK,Pa,WA,SR @ 49.5-50.1' 90°,J,T,No,No,Pl,R @ 50.1-51.2' fracture zone @ 50.1'-51.3'	
														50		530			
														51		529			
														52		528		grades 0% vugs @ 52.1'	
																		80°,J,T,No,No,Pl,SR @ 52.5-52.9'	
														53		527		grades 15% vugs @ 52.9'	
PQ	6								5.0	54.0 5.0	3.6	100	72	54		526		grades gray, 0% vugs @ 54.2'	
														55		525		0°,J,VN,No,No,St,SR @ 54.8' 20°,J,T,No,No,Pl,R @ 55.2' 90°,J,T,No,No,Pl,SR @ 55.4-56.5'	
														56		524			
																		fractured and broken rock @ 56.5-58.0'	
														57		523			Core box #3 starts @ 57.0'.
														58		522		grades 15% vugs @ 58.0'	
																		20°,J,T,No,No,Pl,R @ 58.7'	
										59.0				59		521		90°,J,VN,Ca,Pa,Pl,R @ 59.2-60.4'	
														60					

5/23/2008 4:15 PM DTE-Fermi 3

BLACK & VEATCH

BORING LOG

BORING NO. P-385D

CLIENT	PROJECT	PROJECT NO.
Detroit Edison	Fermi 3 COL Application	147483

PROJECT LOCATION	COORDINATES	GROUND ELEVATION (DATUM)	TOTAL DEPTH
Monroe, Michigan	N 6201.7' E 4390.0'	580.1 ft (NAVD 88)	102.5 (feet)

SURFACE CONDITIONS	COORDINATE SYSTEM	DATE START	DATE FINISHED
Gravel parking lot near a field		05/07/07	05/09/07

LOGGED BY	CHECKED BY	APPROVED BY
Ohlmacher GO	Dogbey/Ohlmacher 6CO	Meyer EM

SAMPLING							CORING							DEPTH (FEET)	SAMPLE TYPE	ELEVATION (FEET)	GRAPHIC LOG	CLASSIFICATION OF MATERIALS	REMARKS
SAMPLE TYPE	SAMPLE NUMBER	SET 6 INCHES	2ND 6 INCHES	3RD 6 INCHES	N VALUE	SAMPLE RECOVERY	CORE SIZE	RUN NUMBER	RUN LENGTH	RUN RECOVERY	RQD RECOVERY	PERCENT RECOVERY	RQD						
														60		520		thin SHALE bed; dolomitic; black; slightly weathered; very weak; low hardness; @ 60.4-60.7'	
																		60.9	
							PQ	7	5.0	4.8	4.3	96	86	61		519		DOLOMITE; oolitic; brownish gray; fine grained; moderately weathered; strong; moderately hard; parting; (Bass Islands Group). 0°,J,T,No,No,Pl,S @ 61.5'	
														62		518			
														63		517			Core box #4 starts @ 62.9'.
										64.0				64		516			
																		64.0	
														65		515		DOLOMITE; gray; very fine grained; slightly weathered; strong; moderately hard; banding; (Bass Islands Group). 85°,J,T,No,No,Pl,SR @ 64.2-64.8'	
														66		514		grades w/shale partings @ 66.0' fractured zone @ 66.1-66.5' 60°,J,T,No,No,Pl,SR @ 66.6-67.2'	
							PQ	8	5.0	4.9	2.9	98	58	67		513			
														68		512		shale band; black @ 68.5-68.7'	
										69.0				69		511			
														70		510		0°,B,VN,No,No,Pl,SR @ 69.8', 69.9' fractured zone @ 70.1-70.2' 45°,J,VN,No,No,St,SR @ 70.3-70.6'	
														71		509		highly fractured, closely spaced, some vertical joints @ 71.0-73.6'	
							PQ	9	5.0	5.0	1.8	100	36	72		508			
														73		507			Core box #5 starts @ 72.7'.
																		grades 10% vugs partially filled w/calcite @ 73.5'	
										74.0				74		506			
														75				grades highly fractured, healed, @ 74.7-76.7'	

BLACK & VEATCH

BORING LOG

BORING NO. P-385D

CLIENT	PROJECT	PROJECT NO.
Detroit Edison	Fermi 3 COL Application	147483

PROJECT LOCATION	COORDINATES	GROUND ELEVATION (DATUM)	TOTAL DEPTH
Monroe, Michigan	N 6201.7' E 4390.0'	580.1 ft (NAVD 88)	102.5 (feet)

SURFACE CONDITIONS	COORDINATE SYSTEM	DATE START	DATE FINISHED
Gravel parking lot near a field		05/07/07	05/09/07

LOGGED BY	CHECKED BY	APPROVED BY
Ohlmacher	Dogbey/Ohlmacher	Meyer

SAMPLING							CORING									
SAMPLE TYPE	SAMPLE NUMBER	SET 6 INCHES	2ND 6 INCHES	3RD 6 INCHES	N VALUE	SAMPLE RECOVERY	CORE SIZE	RUN NUMBER	RUN LENGTH	RUN RECOVERY	RQD RECOVERY	PERCENT RECOVERY	RQD	DEPTH (FEET)	SAMPLE TYPE	ELEVATION (FEET)	GRAPHIC LOG	CLASSIFICATION OF MATERIALS	REMARKS
														75		505			
														76		504		25°,J,VN,No,No,Ir,R @ 75.9-76.0', 77.5' highly fractured, open @ 76.1-76.3' grades brownish gray, w/no fill in vugs @ 76.4'	
							PQ	10	5.0	5.0	3.8	100	76	77		503		grades highly fractured, healed @ 77.5'	
														78		502			
										79.0				79		501		35°,J,VN,No,No,Pl,R @ 79.6-79.7'	
														80		500			
							PQ	11	5.0	5.0	3.2	100	64	81		499			
														82		498		70°,J,VN,No,No,Pl,SR @ 82.0-82.5' highly fractured, open @ 82.3-83.4'	Core box #6 starts @ 82.2'.
														83		497		90°,J,VN,No,No,St,SR @ 83.4-84.0'	
										84.0				84		496			
														85		495		grades no healed fractures @ 84.5' 10°,J,VN,Cl,Sp,Pl,SR @ 85.2' 90°,J,T,No,No,Pl,R @ 85.2-86.0'	
														86		494		highly fractured, open @ 86.0-87.0'	
							PQ	12	5.0	4.8	2.8	96	56	87		493		90°,J,VN,No,No,Pl,SR @ 86.7-89.2'	
																		87.8	
														88		492		SHALE; dark gray; (Bass Islands Group).	
																		88.4	
										89.0				89		491		DOLOMITE; dark gray; very fine grained; slightly weathered; strong; moderately hard; banding; 10% unfilled vugs; w/shale partings; (Bass Islands Group). 0°,B,VN,No,No,Pl,S @ 89.2' 90°,J,T,No,No,Pl,SR @ 89.2-89.5'	
														90					

BLACK & VEATCH

BORING LOG

BORING NO. P-385D

CLIENT	PROJECT	PROJECT NO.
Detroit Edison	Fermi 3 COL Application	147483

PROJECT LOCATION	COORDINATES	GROUND ELEVATION (DATUM)	TOTAL DEPTH
Monroe, Michigan	N 6201.7' E 4390.0'	580.1 ft (NAVD 88)	102.5 (feet)

SURFACE CONDITIONS	COORDINATE SYSTEM	DATE START	DATE FINISHED
Gravel parking lot near a field		05/07/07	05/09/07

LOGGED BY	CHECKED BY	APPROVED BY
GCO Ohlmacher	GCO Dogbey/Ohlmacher	Meyer

SAMPLING							CORING										
SAMPLE TYPE	SAMPLE NUMBER	SET 6 INCHES	2ND 6 INCHES	3RD 6 INCHES	N VALUE	SAMPLE RECOVERY	CORE SIZE	RUN NUMBER	RUN LENGTH	RUN RECOVERY	RQD RECOVERY	PERCENT RECOVERY	RQD	DEPTH (FEET)	SAMPLE TYPE	ELEVATION (FEET)	GRAPHIC LOG	CLASSIFICATION OF MATERIALS	REMARKS
														90		490		0°,J,VN,No,No,WA,SR @ 89.4' highly fractured, open @ 89.9-91.0'	
														91		489			
							PQ	13	5.0	5.0	3.1	100	62	92		488		20°,J,T,No,No,Pl,SR @ 91.5' highly fractured, open @ 91.6-91.8'	
														93		487		highly fractured, open @ 92.3-92.6' grades gray, no vugs @ 92.3'	Core box #7 starts @ 92.4'.
										94.0				94		486			
														95		485		closely spaced joints @ 94.6-95.7' 70°,J,T,No,No,Pl,SR @ 94.8-95.6'	
														96		484			
							PQ	14	5.0	5.0	3.3	100	66	97		483		0°,J,VN,No,No,Pl,SR @ 96.2', 97.9', 98.2'	
														98		482			
																		98.4	
										99.0				99		481		DOLOMITE; argillaceous; gray; very fine grained; slightly weathered; strong; moderately hard; banding; w/shale partings; (Bass Islands Group). 10°,B,VN,No,No,Pl,SR @ 99.4'	
														100		480			
							PQ	15	3.5	3.5	1.8	100	51	101		479		highly fractured, open @ 100.4-100.9' 80°,J,T,No,No,Pl,SR @ 100.5-101.0', 102.2-102.5' (2 joints) 90°,J,T,No,No,Pl,SR @ 100.9-101.6'	
														102		478		25°,J,T,No,No,Pl,SR @ 102.0-102.2'	Core box #8 starts @ 102.1'.
														103		477			Bottom of boring @ 102.5'. Water level @ 14.5' @ completion of drilling. Piezometer installed on 05/31/07.
														104		476			
														105					

BLACK & VEATCH

BORING LOG

BORING NO. P-385S

SHEET 1 OF 2

CLIENT	PROJECT	PROJECT NO.
Detroit Edison	Fermi 3 COL Application	147483

PROJECT LOCATION	COORDINATES	GROUND ELEVATION (DATUM)	TOTAL DEPTH
Monroe, Michigan	N 6198.1' E 4385.6'	580.2 ft (NAVD 88)	17.0 (feet)

SURFACE CONDITIONS	COORDINATE SYSTEM	DATE START	DATE FINISHED
Gravel parking lot	Plant	05/18/07	05/18/07

LOGGED BY	CHECKED BY	APPROVED BY
Deeken	Dogbey/Ohlmacher	Meyer

SAMPLING							CORING									
SAMPLE TYPE	SAMPLE NUMBER	SET 6 INCHES	2ND 6 INCHES	3RD 6 INCHES	N VALUE	SAMPLE RECOVERY	CORE SIZE	RUN NUMBER	RUN LENGTH	RUN RECOVERY	RQD RECOVERY	PERCENT RECOVERY	RQD	DEPTH (FEET)	SAMPLE TYPE	ELEVATION (FEET)	GRAPHIC LOG	CLASSIFICATION OF MATERIALS	REMARKS
														0		580		Well graded GRAVEL with Sand (GW) - About 70% fine to coarse, angular gravel w/max size 1"; fractured w/1 hammer blow; about 25% fine to coarse, angular sand; about 5% fines; gray; medium dense; moist; strong reaction w/HCl; (Fill).	Boring advanced w/4¼" ID, 8" OD hollow stem augers. SPT performed w/D-50 automatic hammer.
														1		579			
														2		578			
														3		577			
														4		576			
														5		575			
SPT	1	4	7	6	13	0.3								6		574			
														7		573			
														8		572			
														9		571			
														10		570		grades wet @ 10.0'	
SPT	2	18	5	2	7	0.5								11		569			
														12		568			
														13		567			
SPT	3	1	2	3	5	0.0								14		566			
														15				14.7	

5/23/2008 9:41 AM DTE-Fermi 3

BLACK & VEATCH

BORING LOG

BORING NO. P-385S

SHEET 2 OF 2

CLIENT	PROJECT	PROJECT NO.
Detroit Edison	Fermi 3 COL Application	147483

PROJECT LOCATION	COORDINATES	GROUND ELEVATION (DATUM)	TOTAL DEPTH
Monroe, Michigan	N 6198.1' E 4385.6'	580.2 ft (NAVD 88)	17.0 (feet)

SURFACE CONDITIONS	COORDINATE SYSTEM	DATE START	DATE FINISHED
Gravel parking lot	Plant	05/18/07	05/18/07

LOGGED BY	CHECKED BY	APPROVED BY
Deeken JD.	Dogbey/Ohlmacher GLO	Meyer EM

SAMPLING							CORING									
SAMPLE TYPE	SAMPLE NUMBER	SET 6 INCHES	2ND 6 INCHES	3RD 6 INCHES	N VALUE	SAMPLE RECOVERY	CORE SIZE	RUN NUMBER	RUN LENGTH	RUN RECOVERY	RQD RECOVERY	PERCENT RECOVERY	RQD	DEPTH (FEET)	SAMPLE TYPE	ELEVATION (FEET)	GRAPHIC LOG	CLASSIFICATION OF MATERIALS	REMARKS
TW	4					1.7								15		565		Lean CLAY (CL) - About 100% LL=36, PL=16, no dilatancy fines; brown; firm; moist; strong reaction w/ HCl; homogeneous; (Lacustrine Deposits).	
														16		564			
														17		563			Bottom of boring @ 17.0'. Water level not recorded. Piezometer installed on 06/04/07.
														18		562			
														19		561			
														20		560			
														21		559			
														22		558			
														23		557			
														24		556			
														25		555			
														26		554			
														27		553			
														28		552			
														29		551			
														30					

BLACK & VEATCH

BORING LOG

BORING NO. P-389S

SHEET 1 OF 2

CLIENT	PROJECT	PROJECT NO.
Detroit Edison	Fermi 3 COL Application	147483

PROJECT LOCATION	COORDINATES	GROUND ELEVATION (DATUM)	TOTAL DEPTH
Monroe, Michigan	N 7821.4' E 3889.3'	576.9 ft (NAVD 88)	17.0 (feet)

SURFACE CONDITIONS	COORDINATE SYSTEM	DATE START	DATE FINISHED
West side of Doxy Rd near intersection of Tower Rd	Plant	05/15/07	05/15/07

LOGGED BY	CHECKED BY	APPROVED BY
Duncan	SKM for Dogbey/Meyer	Meyer

SAMPLING							CORING							DEPTH (FEET)	SAMPLE TYPE	ELEVATION (FEET)	GRAPHIC LOG	CLASSIFICATION OF MATERIALS	REMARKS
SAMPLE TYPE	SAMPLE NUMBER	SET 6 INCHES	2ND 6 INCHES	3RD 6 INCHES	N VALUE	SAMPLE RECOVERY	CORE SIZE	RUN NUMBER	RUN LENGTH	RUN RECOVERY	RQD RECOVERY	PERCENT RECOVERY	RQD						
SPT	1	11	17	10	27	0.7								0				Sandy SILT (ML) - About 60% low plasticity to non-plastic, low toughness, low dry strength fines; about 40% fine to coarse, subangular & angular sand; hard; (Fill).	Boring advanced w/4¼" ID, 8" OD hollow stem augers w/center bit. SPT performed w/BK-81 automatic hammer.
														1		576			
SPT	2	9	12	13	25	0.8								2		575			
														3		574		3.0 — Well graded GRAVEL with Sand (GW) - About 60% fine to coarse, angular, hard gravel w/max. size 1"; about 40% fine to coarse, angular & subangular sand; medium dense; (Fill).	
SPT	3	7	12	8	20	0.6								4		573		Sandy SILT with Gravel (ML) - About 60% low plasticity, low toughness fines; about 20-40% fine to coarse, angular & subangular sand; 10-20% gravel; light brown; hard; moist; lensed; (Fill).	
														5		572		grades firm	
SPT	4	4	4	3	7	1.0								6		571		5.4 — Lean CLAY with Sand (CL) - About 85% low to medium plasticity, medium toughness, no dilatancy fines; about 15% fine to coarse sand; grayish brown; firm; moist; lensed; (Fill).	
SPT	5	2	3	5	8	1.4								7		570		6.0 — Lean CLAY (CL) - About 100% high plasticity, low toughness, no dilatancy fines; black; soft; moist; homogeneous; peat (organics).	
SPT	6	3	4	4	8	1.1								8		569		6.3 — Lean CLAY (CL) - About 100% medium plasticity, medium toughness, no dilatancy fines; w/trace sand; reddish brown & gray; firm; moist; lensed.	
TW	7					2.0								10		567			
														11		566		grades hard; dry to moist @ 11.0'	
SPT	8	6	8	14	22	1.5								12		565		12.3 — Sandy Lean CLAY (CL) - About 70% low plasticity, medium to high toughness, no dilatancy fines; about 30% fine sand; w/trace gravel; strong; brown; very hard; homogeneous; moist.	
SPT	9	8	13	20	33	1.5								13		564			
														14		563		grades hard	
SPT	10	4	10	18	28	1.0								15		562			

5/23/2008 11:13 AM DTE-Fermi 3

BLACK & VEATCH

BORING LOG

BORING NO. P-389S

CLIENT	PROJECT	PROJECT NO.
Detroit Edison	Fermi 3 COL Application	147483

PROJECT LOCATION	COORDINATES	GROUND ELEVATION (DATUM)	TOTAL DEPTH
Monroe, Michigan	N 7821.4' E 3889.3'	576.9 ft (NAVD 88)	17.0 (feet)

SURFACE CONDITIONS	COORDINATE SYSTEM	DATE START	DATE FINISHED
West side of Doxy Rd near intersection of Tower Rd	Plant	05/15/07	05/15/07

LOGGED BY	CHECKED BY	APPROVED BY
Duncan	Dogbey/Meyer for EM	Meyer EM

SAMPLING							CORING									
SAMPLE TYPE	SAMPLE NUMBER	SET 6 INCHES	2ND 6 INCHES	3RD 6 INCHES	N VALUE	SAMPLE RECOVERY	CORE SIZE	RUN NUMBER	RUN LENGTH	RUN RECOVERY	RQD RECOVERY	PERCENT RECOVERY	RQD	DEPTH (FEET)	SAMPLE TYPE	ELEVATION (FEET)	GRAPHIC LOG	CLASSIFICATION OF MATERIALS	REMARKS
														15					
														16		561			Below 16.0' continued w/4¼" ID, 8" OD hollow stem augers w/ center bit.
														17		560			Bottom of boring @ 17.0'. Water level not recorded. Piezometer installed on 05/15/07.
														18		559			
														19		558			
														20		557			
														21		556			
														22		555			
														23		554			
														24		553			
														25		552			
														26		551			
														27		550			
														28		549			
														29		548			
														30		547			

BLACK & VEATCH

BORING LOG

BORING NO. P-392S

SHEET 1 OF 2

CLIENT	PROJECT	PROJECT NO.
Detroit Edison	Fermi 3 COL Application	147483

PROJECT LOCATION	COORDINATES	GROUND ELEVATION (DATUM)	TOTAL DEPTH
Monroe, Michigan	N 8088.7' E 5841.5'	580.6 ft (NAVD 88)	18.0 (feet)

SURFACE CONDITIONS	COORDINATE SYSTEM	DATE START	DATE FINISHED
Level, gravel surface, SE of S Cooling Tower	Plant	05/29/07	05/29/07

LOGGED BY	CHECKED BY	APPROVED BY
Duncan	Dogbey/Meyer	Meyer

SAMPLING							CORING									
SAMPLE TYPE	SAMPLE NUMBER	SET 6 INCHES	2ND 6 INCHES	3RD 6 INCHES	N VALUE	SAMPLE RECOVERY	CORE SIZE	RUN NUMBER	RUN LENGTH	RUN RECOVERY	RQD RECOVERY	PERCENT RECOVERY	RQD	DEPTH (FEET)	SAMPLE TYPE	ELEVATION (FEET)	GRAPHIC LOG	CLASSIFICATION OF MATERIALS	REMARKS
														0		580		Undifferentiated Rock Fill	Boring advanced w/vacuum excavation.
														1		579			
														2		578			
														3		577			
														4		576			
														5		575			
														6		574			
														7		573			
														8		572		8.0	
SPT	1	2	4	3	7	0.5								9		571		Poorly graded GRAVEL (GP) - About 100% fine to coarse, angular, flat to elongated, hard gravel w/max. size 1¼"; pinkish gray; loose; strong reaction w/HCl; homogeneous; (Fill).	Below 8.0' continued w/4¼" ID, 8" OD hollow stem augers w/ tricone center bit. SPT performed w/BK-81 automatic hammer.
SPT	2	3	3	4	7	0.5								10		570			
														11		569		11.0	
SPT	3	11	11	13	24	0.8								12		568		Poorly graded SAND with Gravel (SP) - About 80% fine to coarse, angular & subangular, hard sand; about 20% fine to coarse, angular, flat & elongated, hard gravel w/max. size 1"; pinkish gray; medium dense; strong reaction w/HCl; homogeneous	
SPT	4	6	6	8	14	0.9								13		567			
														14		566			
SPT	5	7	7	10	17	NR								15					

5/21/2008 1:46 PM DTE-Fermi 3

BLACK & VEATCH

BORING LOG

BORING NO. P-392S

SHEET 2 OF 2

CLIENT	PROJECT	PROJECT NO.
Detroit Edison	Fermi 3 COL Application	147483

PROJECT LOCATION	COORDINATES	GROUND ELEVATION (DATUM)	TOTAL DEPTH
Monroe, Michigan	N 8088.7' E 5841.5'	580.6 ft (NAVD 88)	18.0 (feet)

SURFACE CONDITIONS	COORDINATE SYSTEM	DATE START	DATE FINISHED
Level, gravel surface, SE of S Cooling Tower	Plant	05/29/07	05/29/07

LOGGED BY	CHECKED BY	APPROVED BY
Duncan	Dogbey/Meyer	Meyer

SAMPLING: SAMPLE TYPE	SAMPLE NUMBER	SET 6 INCHES	2ND 6 INCHES	3RD 6 INCHES	N VALUE	SAMPLE RECOVERY	CORING: CORE SIZE	RUN NUMBER	RUN LENGTH	RUN RECOVERY	RQD RECOVERY	PERCENT RECOVERY	RQD	DEPTH (FEET)	SAMPLE TYPE	ELEVATION (FEET)	GRAPHIC LOG	CLASSIFICATION OF MATERIALS	REMARKS
TW	6					2.0								15		565			
														16		564		16.0 Fat CLAY (CH) - About 100% high plasticity, low to medium toughness, no dilatancy, high to very high dry strength fines; dark greenish gray, w/trace brown; soft; moist; no reaction w/HCl; lensed.	TV = 1.0 TSF @ 16.0'.
														17		563			
														18		562			Bottom of boring @ 18.0'. Water level not recorded. Piezometer installed on 05/29/07.
														19		561			
														20		560			
														21		559			
														22		558			
														23		557			
														24		556			
														25		555			
														26		554			
														27		553			
														28		552			
														29		551			
														30					

5/21/2008 1:46 PM DTE-Fermi 3

BLACK & VEATCH

BORING LOG

BORING NO. P-396S

SHEET 1 OF 2

CLIENT	PROJECT	PROJECT NO.
Detroit Edison	Fermi 3 COL Application	147483

PROJECT LOCATION	COORDINATES	GROUND ELEVATION (DATUM)	TOTAL DEPTH
Monroe, Michigan	N 8949.8' E 5248.8'	578.4 ft (NAVD 88)	19.5 (feet)

SURFACE CONDITIONS	COORDINATE SYSTEM	DATE START	DATE FINISHED
Level, grass & gravel surface, E of Cooling Towers	Plant	05/23/07	05/24/07

LOGGED BY	CHECKED BY	APPROVED BY
Duncan	Meyer	Meyer

SAMPLING							CORING									
SAMPLE TYPE	SAMPLE NUMBER	SET 6 INCHES	2ND 6 INCHES	3RD 6 INCHES	N VALUE	SAMPLE RECOVERY	CORE SIZE	RUN NUMBER	RUN LENGTH	RUN RECOVERY	RQD RECOVERY	PERCENT RECOVERY	RQD	DEPTH (FEET)	SAMPLE TYPE	ELEVATION (FEET)	GRAPHIC LOG	CLASSIFICATION OF MATERIALS	REMARKS
														0		578		Undifferentiated Rock Fill	Boring advanced w/4¼" ID, 8" OD hollow stem augers.
														1		577			
														2		576			
														3		575			
														4		574			
														5		573			
														6		572			
														7		571			
														8		570			
														9		569			
														10		568			
														11		567			
														12		566		12.0	
SPT	1	2	3	4	7	0.5								13		565		Fat CLAY (CH) - About 100% medium to high plasticity, low toughness, no dilatancy, high dry strength fines; dark greenish gray; mottled w/trace brown; firm; moist; slight odor; no reaction w/HCl; lensed.	SPT performed w/BK-81 automatic hammer.
														14		564			
														15					

5/20/2008 6:03 PM DTE-Fermi 3

BLACK & VEATCH

BORING LOG

BORING NO. P-396S

CLIENT	PROJECT	PROJECT NO.
Detroit Edison	Fermi 3 COL Application	147483

PROJECT LOCATION	COORDINATES	GROUND ELEVATION (DATUM)	TOTAL DEPTH
Monroe, Michigan	N 8949.8' E 5248.8'	578.4 ft (NAVD 88)	19.5 (feet)

SURFACE CONDITIONS	COORDINATE SYSTEM	DATE START	DATE FINISHED
Level, grass & gravel surface, E of Cooling Towers	Plant	05/23/07	05/24/07

LOGGED BY	CHECKED BY	APPROVED BY
Duncan	Meyer EM	Meyer EM

SAMPLING							CORING									
SAMPLE TYPE	SAMPLE NUMBER	SET 6 INCHES	2ND 6 INCHES	3RD 6 INCHES	N VALUE	SAMPLE RECOVERY	CORE SIZE	RUN NUMBER	RUN LENGTH	RUN RECOVERY	RQD RECOVERY	PERCENT RECOVERY	RQD	DEPTH (FEET)	SAMPLE TYPE	ELEVATION (FEET)	GRAPHIC LOG	CLASSIFICATION OF MATERIALS	REMARKS
TW	2					1.5								15		563		15.0 Lean CLAY (CL) - About 90% low plasticity, medium toughness, no dilatancy, medium dry strength fines; about 10% fine to medium, rounded, hard sand; brown mottled w/dark greenish gray; firm; moist; strong reaction w/HCl; (Glacial Till).	TV = 1.0 TSF @ 15.0'.
														16		562			
														17		561			
														18		560		18.0 Lean CLAY with Sand (CL) - About 85% low plasticity, high toughness, no dilatancy, medium dry strength fines; about 15% fine to coarse, subangular to subrounded, hard sand; dark reddish gray; very hard; moist; strong reaction w/HCl; homogeneous; (Glacial Till).	
SPT	3	5	15	21	36	1.5								19		559			
														20		558			Bottom of boring @ 19.5'. Water level @ 7.0' @ completion of drilling. Piezometer installed on 05/24/07.
														21		557			
														22		556			
														23		555			
														24		554			
														25		553			
														26		552			
														27		551			
														28		550			
														29		549			
														30					

BLACK & VEATCH **BORING LOG**

BORING NO. P-397S

SHEET 1 OF 2

CLIENT	PROJECT	PROJECT NO.
Detroit Edison	Fermi 3 COL Application	147483

PROJECT LOCATION	COORDINATES	GROUND ELEVATION (DATUM)	TOTAL DEPTH
Monroe, Michigan	N 8901.4' E 5748.5'	576.0 ft (NAVD 88)	21.5 (feet)

SURFACE CONDITIONS	COORDINATE SYSTEM	DATE START	DATE FINISHED
Level, gravel shoulder, East of Cooling Towers	Plant	05/23/07	05/23/07

LOGGED BY	CHECKED BY	APPROVED BY
Duncan	Dogbey/Meyer	Meyer

SOIL SAMPLING							ROCK CORING										
SAMPLE TYPE	SAMPLE NUMBER	SET 6 INCHES	2ND 6 INCHES	3RD 6 INCHES	N VALUE	SAMPLE RECOVERY	CORE SIZE	RUN NUMBER	RUN LENGTH	RUN RECOVERY	RQD RECOVERY	PERCENT RECOVERY	RQD	DEPTH (FEET)	SAMPLE TYPE	ELEVATION (FEET)	GRAPHIC LOG	CLASSIFICATION OF MATERIALS	REMARKS
														0		576		Undifferentiated Rock Fill;	Boring advanced w/4¼" ID, 8" OD hollow stem augers. SPT performed w/BK-81 automatic hammer.
														1		575			
														2		574			
														3		573			
														4		572		4.0	
														5		571		Lean CLAY (CL) - About 90% medium plasticity, medium toughness, slow dilatancy, medium dry strength fines; about 10% coarse, subangular & angular, hard sand; dark grayish brown; firm; moist; strong reaction w/HCl; homogeneous	
																		5.5	
SPT	1	1	2	3	5	0.7								6		570		Fat CLAY (CH) - About 90% high plasticity, medium toughness, slow dilatancy, medium dry strength fines; about 10% coarse, subangular & angular, hard sand; dark grayish brown; firm; moist; weak reaction w/HCl; homogeneous	
														7		569			
														8		568			
														9		567			
														10		566			
SPT	2	1	2	3	5	0.0								11		565		11.5	
														12		564		ORGANIC Soil (OL/OH) - About 95% high plasticity, medium toughness, slow dilatancy, low dry strength fines; 5% organic material (peat); dark gray; soft; moist; strong odor; no reaction w/HCl; homogeneous	
																		12.5	Drill reaction changed @ 12.5'.
														13		563		Lean CLAY (CL) - About 95% low to medium plasticity, medium toughness, slow dilatancy, high dry strength fines; about 5% coarse, rounded & subrounded, hard sand; yellowish brown mottled with light olive gray; firm; moist; homogeneous; (Glacial Till).	
SPT	3	3	3	7	10	1.5								14		562			
														15		561			

BLACK & VEATCH

BORING LOG

BORING NO. P-397S

CLIENT	PROJECT	PROJECT NO.
Detroit Edison	Fermi 3 COL Application	147483

PROJECT LOCATION	COORDINATES	GROUND ELEVATION (DATUM)	TOTAL DEPTH
Monroe, Michigan	N 8901.4' E 5748.5'	576.0 ft (NAVD 88)	21.5 (feet)

SURFACE CONDITIONS	COORDINATE SYSTEM	DATE START	DATE FINISHED
Level, gravel shoulder, East of Cooling Towers	Plant	05/23/07	05/23/07

LOGGED BY	CHECKED BY	APPROVED BY
Duncan	Dogbey/Meyer	Meyer

SOIL SAMPLING							ROCK CORING										
SAMPLE TYPE	SAMPLE NUMBER	SET 6 INCHES	2ND 6 INCHES	3RD 6 INCHES	N VALUE	SAMPLE RECOVERY	CORE SIZE	RUN NUMBER	RUN LENGTH	RUN RECOVERY	RQD RECOVERY	PERCENT RECOVERY	RQD	DEPTH (FEET)	SAMPLE TYPE	ELEVATION (FEET)	GRAPHIC LOG	CLASSIFICATION OF MATERIALS	REMARKS
TW	4					0.9								15		561			
														16		560			
														17		559			
														18		558			
														19		557		18.9 Sandy Lean CLAY (CL) - About 70% low plasticity, high toughness, slow to no dilatancy, medium to high dry strength fines; about 30% coarse, rounded to subrounded, hard sand; dark gray; very hard; dry to moist; strong reaction w/HCl; homogeneous; (Glacial Till).	
SPT	5	9	16	20	36	1.3								20		556			
														21		555			
														22		554			Bottom of boring @ 21.5'. Water level not recorded. Piezometer installed on 05/23/07.
														23		553			
														24		552			
														25		551			
														26		550			
														27		549			
														28		548			
														29		547			
														30		546			

BLACK & VEATCH

BORING LOG

BORING NO. P-398D

CLIENT	PROJECT	PROJECT NO.
Detroit Edison	Fermi 3 COL Application	147483

PROJECT LOCATION	COORDINATES	GROUND ELEVATION (DATUM)	TOTAL DEPTH
Monroe, Michigan	N 9510.6' E 5352.1'	577.9 ft (NAVD 88)	101.0 (feet)

SURFACE CONDITIONS	COORDINATE SYSTEM	DATE START	DATE FINISHED
Level, grassy covered; North of North Cooling Tower	Plant	05/15/07	05/17/07

LOGGED BY	CHECKED BY	APPROVED BY
Grainger/Duncan	Meyer	Meyer

SAMPLING: SAMPLE TYPE	SAMPLE NUMBER	SET 6 INCHES	2ND 6 INCHES	3RD 6 INCHES	N VALUE	SAMPLE RECOVERY	CORING: CORE SIZE	RUN NUMBER	RUN LENGTH	RUN RECOVERY	RQD RECOVERY	PERCENT RECOVERY	RQD	DEPTH (FEET)	SAMPLE TYPE	ELEVATION (FEET)	GRAPHIC LOG	CLASSIFICATION OF MATERIALS	REMARKS
S	1					5.0								0		577		Silty GRAVEL with Sand (GM) - About 60% coarse, angular, hard gravel w/max size 3"; about 20% fine to coarse, angular sand; about 15% no plasticity, low toughness, no dilatancy, low dry strength fines; about 5% cobbles; yellowish brown; moist; strong reaction w/ HCl; homogeneous; (Fill).	Boring advanced w/4" ID sonic continuous sampler w/ nominal 6" temporary steel casing advanced w/sampler.
														1		576			
														2		575			
														3		574			
														4		573			
										5.0				5		572			
S	2					4.5								6		571		5.5 Lean CLAY (CL) - About 90% medium plasticity, medium toughness, slow dilatancy, medium dry strength fines; about 10% coarse, subrounded sand; w/trace rounded cobbles; yellowish brown; firm; moist; homogeneous; (Fill).	
														7		570			
														8		569			
														9		568		9.8 ORGANIC Soil (OL/OH) - About 95% medium plasticity, medium toughness, slow dilatancy, low dry strength fines; about 5% peat; dark gray; soft; moist; earthy odor; no reaction w/HCl; homogeneous; (Lacustrine Deposit).	
										10.0				10		567		10.5 Lean CLAY (CL) - About 95% medium plasticity, medium toughness, slow dilatancy, high dry strength fines; about 5% coarse, rounded to subrounded sand; light olive gray mottled w/yellowish brown; firm; moist; homogeneous; (Glacial Till).	
S	3					5.0								11		566			
														12		565			
														13		564			
														14		563			
														15					

BLACK & VEATCH

BORING LOG

BORING NO. P-398D

CLIENT	PROJECT	PROJECT NO.
Detroit Edison	Fermi 3 COL Application	147483

PROJECT LOCATION	COORDINATES	GROUND ELEVATION (DATUM)	TOTAL DEPTH
Monroe, Michigan	N 9510.6' E 5352.1'	577.9 ft (NAVD 88)	101.0 (feet)

SURFACE CONDITIONS	COORDINATE SYSTEM	DATE START	DATE FINISHED
Level, grassy covered; North of North Cooling Tower	Plant	05/15/07	05/17/07

LOGGED BY	CHECKED BY	APPROVED BY
Grainger/Duncan	Meyer	Meyer

SAMPLING: SAMPLE TYPE	SAMPLE NUMBER	SET 6 INCHES	2ND 6 INCHES	3RD 6 INCHES	N VALUE	SAMPLE RECOVERY	CORING: CORE SIZE	RUN NUMBER	RUN LENGTH	RUN RECOVERY	RQD RECOVERY	PERCENT RECOVERY	RQD	DEPTH (FEET)	SAMPLE TYPE	ELEVATION (FEET)	GRAPHIC LOG	CLASSIFICATION OF MATERIALS	REMARKS
										15.0				15					
														16		562			
														17		561		17.0	
S	4												5.0	18		560		Sandy Lean CLAY with Gravel (CL) - About 70% medium plasticity, medium toughness, slow dilatancy, very high dry strength fines; about 15% fine to coarse, angular to rounded, hard sand; about 15% fine to coarse, angular to rounded, hard gravel; dark gray; hard; moist; strong reaction w/HCl; homogeneous; (Glacial Till).	
														19		559			
										20.0				20		558			
														21		557			
S	5												5.0	22		556			
														23		555			
														24		554			
										25.0				25		553			
														26		552			
																		26.5	
S	6												4.5	27		551		DOLOMITE; light olive gray; blocky; very fine grained; slightly weathered; very strong; hard; pitted; (Bass Islands Group).	Below 26.5' water circulated w/ sonic drilling to prevent fines caking on samples. 50% drilling fluid loss @ 27.0'.
														28		550			
														29		549			
										29.5				30		548		0°,J,T,No,No,Pl,SR @ 29.5', 29.8'	Set nominal 6" temporary steel casing to 29.5'.

BLACK & VEATCH

BORING LOG

BORING NO. P-398D

CLIENT	PROJECT	PROJECT NO.
Detroit Edison	Fermi 3 COL Application	147483

PROJECT LOCATION	COORDINATES	GROUND ELEVATION (DATUM)	TOTAL DEPTH
Monroe, Michigan	N 9510.6' E 5352.1'	577.9 ft (NAVD 88)	101.0 (feet)

SURFACE CONDITIONS	COORDINATE SYSTEM	DATE START	DATE FINISHED
Level, grassy covered; North of North Cooling Tower	Plant	05/15/07	05/17/07

LOGGED BY	CHECKED BY	APPROVED BY
Grainger/Duncan	Meyer	Meyer

SAMPLING							CORING									
SAMPLE TYPE	SAMPLE NUMBER	SET 6 INCHES	2ND 6 INCHES	3RD 6 INCHES	N VALUE	SAMPLE RECOVERY	CORE SIZE	RUN NUMBER	RUN LENGTH	RUN RECOVERY	RQD RECOVERY	PERCENT RECOVERY	RQD	DEPTH (FEET)	SAMPLE TYPE	ELEVATION (FEET)	GRAPHIC LOG	CLASSIFICATION OF MATERIALS	REMARKS
PQ	1	1.5	1.4	1.4	93	93								30					Below 29.5' continued w/triple tube wire line core barrel w/ diamond bit using water as drilling fluid. Core box #1 starts @ 29.5'.
			31.0											31		547		grades w/vugs & pits; w/trace quartz infill @ 31.5'	
														32		546		15°,J,VN,Su,SR, w/slight weathering @ 31.5' 0°,J,N,No,Su,Pl,SR w/moderate weathering @ 32.0'	
														33		545		0°,J,N,No,Su,Pl,SR moderately weathered; clay staining @ 32.5', 32.6'	
PQ	2	5.0	5.0	4.8	100	96								34		544		grades w/trace vugs & pits, fresh @ 33.8' 0°,J,T,No,No,Pl,SR @ 33.8, 34.2', 34.4', 34.8'	
														35		543			
														36		542		30° & 40°,J,T,No,No,Ir,R @ 35.5'	
			36.0															0°,J,N,No,Su,Pl,SR w/slight weathering & staining @ 35.9'	
																		36.3	
														37		541		DOLOMITE; crystalline; medium gray; micritic; fresh; strong; hard; interbedded w/argillaceous dolomite & shale partings; (Salina Group - Unit F). shale parting; highly weathered fragments; max size ¾" @ 36.3'	
														38		540		15°,J,T,No,No,Pl,SR @ 36.7'	
PQ	3	5.0	4.7	3.8	94	76								39		539		shale bands -1", highly weathered; fragments, max. size ¾" @ 36.8' tan & gray striations, moderately weathered; w/shale partings @ 37.1' to 37.3'	Core box #2 starts @ 38.1'.
														40		538		slightly weathered; w/staining & large vug @ 39.3-39.5'	Drill speed reduced due to strong vibration around 39.3'.
														41		537			
			41.0											42		536		2" thick fractured zone @ 42.5'	
														43		535		shale band -1½", highly weathered, broken fragments, max. size ¾" @ 42.8'	
PQ	4	5.0	4.9	4.6	98	92								44		534			
														45		533			

6/19/2008 11:24 AM DTE-Fermi 3

BORING LOG

CLIENT	PROJECT	PROJECT NO.
Detroit Edison	Fermi 3 COL Application	147483

PROJECT LOCATION	COORDINATES	GROUND ELEVATION (DATUM)	TOTAL DEPTH
Monroe, Michigan	N 9510.6' E 5352.1'	577.9 ft (NAVD 88)	101.0 (feet)

SURFACE CONDITIONS	COORDINATE SYSTEM	DATE START	DATE FINISHED
Level, grassy covered; North of North Cooling Tower	Plant	05/15/07	05/17/07

LOGGED BY	CHECKED BY	APPROVED BY
Grainger/Duncan	Meyer	Meyer

SAMPLING							CORING										
SAMPLE TYPE	SAMPLE NUMBER	SET 6 INCHES	2ND 6 INCHES	3RD 6 INCHES	N VALUE	SAMPLE RECOVERY	CORE SIZE	RUN NUMBER	RUN LENGTH	RUN RECOVERY	RQD RECOVERY	PERCENT RECOVERY	RQD	DEPTH (FEET)	SAMPLE TYPE	ELEVATION (FEET)	GRAPHIC LOG

CLASSIFICATION OF MATERIALS	REMARKS
45.5 SHALE; gray; blocky; strong; very hard; (Salina Group - Unit F). highly weathered band @ 45.5'-45.7'	
60°J,T,No,No,Ir,R, intersecting 0°,J,T,No,No,Ir,R @ 46.7' 0°,J,T,No,No,Ir,R @ 47.0' 0°,J,N,No,No,Pl,SR, moderately weathered parting @ 47.2'	Core box #3 starts @ 47.6'.
0 & 60° intersecting J,T,No,Su,Ir,R, slightly weathered @ 47.4-47.8' 0°, 50° & 90° intersecting J,T,No,No,Ir,R @ 47.8-49.5'	
30°,J,VN,No,Su,Ir,SR, slight weathering @ 50.0' 0 & 60°,J,VN,No,Su,Ir,SR, numerous, slightly weathered @ 50.0-56.6'	
0 & 60°,J,VN,No,Su,Ir,SR, slightly weathered @ 51.2-51.6' 0, 30 & 80°,J,VN,No,Su,Ir,SR, slightly weathered @ 51.6-52.0' highly weathered to residual, thin bedded, max. size 1½" @ 52.5-53.0'	
0° & other angle,J,N,No,No,Ir,SR numerous, moderately weathered @ 53.3-53.6'	
53.7 DOLOMITE; slightly to moderately weathered, fractured & stained; (Salina Group - Unit F).	
54.3 SHALE; gray; blocky; strong; very hard; (Salina Group - Unit F). highly weathered to residual; fractured @ 54.9-56.0'	
80°,J,T,No,No,Ir,R @ 56.5-57.1' 30°,J,T,No,No,Ir,R @ 56.5'	Core box #4 starts @ 56.0'.
0°,J,VN,No,Su,Pl,R, slightly weathered @ 57.1' 60°,J,T,No,No,Ir,R @ 57.2-57.5' fractured; slightly to completely weathered @ 57.6-58.8'	
58.8 SHALE; dolomitic; gray; highly weathered to residual; very weak; low hardness to friable; (Salina Group - Unit F)	

SAMPLE TYPE	SAMPLE NUMBER	SET 6 INCHES	2ND 6 INCHES	3RD 6 INCHES	N VALUE	SAMPLE RECOVERY	CORE SIZE	RUN NUMBER	RUN LENGTH	RUN RECOVERY	RQD RECOVERY	PERCENT RECOVERY	RQD	DEPTH (FEET)	ELEVATION (FEET)
										46.0				45	
														46	532
														47	531
														48	530
							PQ	5	5.0	5.0	3.5	100	70	49	529
														50	528
										51.0				51	527
														52	526
														53	525
							PQ	6	5.0	4.4	2.3	88	46	54	524
														55	523
										56.0				56	522
														57	521
														58	520
							PQ	7	5.0	3.8	2.4	76	48	59	519
														60	518

BLACK & VEATCH

BORING LOG

BORING NO. P-398D

CLIENT	PROJECT	PROJECT NO.
Detroit Edison	Fermi 3 COL Application	147483

PROJECT LOCATION	COORDINATES	GROUND ELEVATION (DATUM)	TOTAL DEPTH
Monroe, Michigan	N 9510.6' E 5352.1'	577.9 ft (NAVD 88)	101.0 (feet)

SURFACE CONDITIONS	COORDINATE SYSTEM	DATE START	DATE FINISHED
Level, grassy covered; North of North Cooling Tower	Plant	05/15/07	05/17/07

LOGGED BY	CHECKED BY	APPROVED BY
Geo for Grainger/Duncan	Meyer	Meyer

SAMPLING							CORING									
SAMPLE TYPE	SAMPLE NUMBER	SET 6 INCHES	2ND 6 INCHES	3RD 6 INCHES	N VALUE	SAMPLE RECOVERY	CORE SIZE	RUN NUMBER	RUN LENGTH	RUN RECOVERY	RQD RECOVERY	PERCENT RECOVERY	RQD	DEPTH (FEET)	SAMPLE TYPE	ELEVATION (FEET)	GRAPHIC LOG	CLASSIFICATION OF MATERIALS	REMARKS
														60					
														61		517		grades w/trace pits & vugs @ 61.0'	
			61.0											62		516			
														63		515			
							PQ	8	5.0	3.7	1.0	74	20	64		514			
														65		513			
			66.0											66		512			Core box #5 starts @ 66.0'.
														67		511		2" dolomite band @ 66.9-67.1'	
														68		510			
							PQ	9	5.0	3.5	1.3	70	26	69		509			
														70		508			
			71.0											71		507			
														72		506			
														73		505			
							PQ	10	5.0	4.0	3.2	80	64	74		504			
														75		503			

6/19/2008 11:24 AM DTE-Fermi 3

BLACK & VEATCH

BORING LOG

BORING NO. P-398D

CLIENT	PROJECT	PROJECT NO.
Detroit Edison	Fermi 3 COL Application	147483

PROJECT LOCATION	COORDINATES	GROUND ELEVATION (DATUM)	TOTAL DEPTH
Monroe, Michigan	N 9510.6' E 5352.1'	577.9 ft (NAVD 88)	101.0 (feet)

SURFACE CONDITIONS	COORDINATE SYSTEM	DATE START	DATE FINISHED
Level, grassy covered; North of North Cooling Tower	Plant	05/15/07	05/17/07

LOGGED BY	CHECKED BY	APPROVED BY
Grainger/Duncan	Meyer	Meyer

SAMPLING							CORING										
SAMPLE TYPE	SAMPLE NUMBER	SET 6 INCHES	2ND 6 INCHES	3RD 6 INCHES	N VALUE	SAMPLE RECOVERY	CORE SIZE	RUN NUMBER	RUN LENGTH	RUN RECOVERY	RQD RECOVERY	PERCENT RECOVERY	RQD	DEPTH (FEET)	SAMPLE TYPE	ELEVATION (FEET)	GRAPHIC LOG	CLASSIFICATION OF MATERIALS	REMARKS
														75					
														76		502			
			76.0											77		501			
														78		500			
							PQ	11	5.0	3.7	2.8	74	56	79		499			Core box #6 starts @ 78.1'.
														80		498			
																		80.1 SHALE; dolomitic; gray; blocky; micritic; fresh; very strong; hard; highly fractured; w/bands that are highly weathered to completely weathered & infilled w/clay & dolomitic shale fragments; occasional vuggy & pitty beds of dolomitic shale; (Salina Group - Unit F).	
			81.0											81		497			
														82		496			
														83		495			
							PQ	12	5.0	5.0	4.1	100	82	84		494			
														85		493			
														86		492			
			86.0															grades w/residual shale beds @ 86.0'	Water level @ 24.8' prior to drilling on 05/17/07.
														87		491			
														88		490			
							PQ	13	5.0	2.9	0.0	58	0	89		489			
														90		488			

BLACK & VEATCH

BORING LOG

BORING NO. P-398D

SHEET 7 OF 7

CLIENT	PROJECT	PROJECT NO.
Detroit Edison	Fermi 3 COL Application	147483

PROJECT LOCATION	COORDINATES	GROUND ELEVATION (DATUM)	TOTAL DEPTH
Monroe, Michigan	N 9510.6' E 5352.1'	577.9 ft (NAVD 88)	101.0 (feet)

SURFACE CONDITIONS	COORDINATE SYSTEM	DATE START	DATE FINISHED
Level, grassy covered; North of North Cooling Tower	Plant	05/15/07	05/17/07

LOGGED BY	CHECKED BY	APPROVED BY
Grainger/Duncan	Meyer	Meyer

SAMPLING							CORING									
SAMPLE TYPE	SAMPLE NUMBER	SET 6 INCHES	2ND 6 INCHES	3RD 6 INCHES	N VALUE	SAMPLE RECOVERY	CORE SIZE	RUN NUMBER	RUN LENGTH	RUN RECOVERY	RQD RECOVERY	PERCENT RECOVERY	RQD	DEPTH (FEET)	SAMPLE TYPE	ELEVATION (FEET)	GRAPHIC LOG	CLASSIFICATION OF MATERIALS	REMARKS
														90					
										91.0				91		487			Core box #7 starts @ 91.0'.
														92		486			
														93		485			
							PQ	14	5.0	3.8	0.4	76	8	94		484			
														95		483			
										96.0				96		482			1.7' core loss due to wash out.
														97		481			
														97.5					
							PQ	15	5.0	3.3	2.2	66	44	98		480		BRECCIA; dark greenish gray; vuggy; very fine grained; moderately weathered; very strong; hard; pits & vugs; slightly fossiliferous; healed w/calcite; strong reaction w/HCl; very rough surfaces; (Salina Group - Unit F). 3" fractured zone; moderately weathered w/staining @ 99.4-99.8'	
														99		479			
														100		478			
														101		477			Bottom of boring @ 101.0'. Water level @ 24.8' @ completion of drilling. Piezometer installed on 06/02/07.
														102		476			
														103		475			
														104		474			
														105		473			

BLACK & VEATCH

BORING LOG

BORING NO. P-398S

CLIENT	PROJECT	PROJECT NO.
Detroit Edison	Fermi 3 COL Application	147483

PROJECT LOCATION	COORDINATES	GROUND ELEVATION (DATUM)	TOTAL DEPTH
Monroe, Michigan	N 9504.3' E 5350.4'	578.0 ft (NAVD 88)	18.0 (feet)

SURFACE CONDITIONS	COORDINATE SYSTEM	DATE START	DATE FINISHED
Level, grass cover, North of North Cooling Tower	Plant	05/23/07	05/23/07

LOGGED BY	CHECKED BY	APPROVED BY
Duncan	Meyer EM	Meyer EM

SAMPLING: SAMPLE TYPE	SAMPLE NUMBER	SET 6 INCHES	2ND 6 INCHES	3RD 6 INCHES	N VALUE	SAMPLE RECOVERY	CORING: CORE SIZE	RUN NUMBER	RUN LENGTH	RUN RECOVERY	RQD RECOVERY	PERCENT RECOVERY	RQD	DEPTH (FEET)	SAMPLE TYPE	ELEVATION (FEET)	GRAPHIC LOG	CLASSIFICATION OF MATERIALS	REMARKS
														0		578		Undifferentiated Overburden; (Refer to Log P-398D)	Boring advanced w/4½" ID, 8" OD hollow stem augers w/tricone bit as center plug. SPT performed w/BK-81 automatic hammer.
														1		577			
														2		576			
														3		575			
														4		574			
														4.5					
SPT	1	2	3	3	6	0.9								5		573		Lean CLAY (CL) - About 90% medium plasticity, medium toughness, slow dilatancy, medium dry strength fines; about 10% coarse, subrounded, hard sand; trace rounded, moderately hard cobbles; yellowish brown; firm; moist; strong reaction w/HCl; homogeneous; (Fill). about 30% sand @ 5.0-5.5'	
														6		572			
														7		571			
														8		570			
														9		569			
														10		568			
														10.7					
SPT	2	2	2	4	6	1.3								11		567		ORGANIC Soil (OL/OH) - About 95% medium plasticity, medium toughness, slow dilatancy, low dry strength fines; about 5% peat; dark gray; firm; moist; no reaction w/HCl; homogeneous	
														12		566			
														13		565			
														13.0					
TW	3					1.6								14		564		Lean CLAY (CL) - About 95% medium plasticity, medium toughness, slow dilatancy, high dry strength fines; about 5% coarse, rounded to subrounded, hard sand; light olive gray, mottled with yellowish brown; firm; moist; homogeneous; (Glacial Till).	
														15		563			

5/27/2008 3:31 PM DTE-Fermi 3

BLACK & VEATCH

BORING LOG

BORING NO. P-398S

CLIENT	PROJECT	PROJECT NO.
Detroit Edison	Fermi 3 COL Application	147483

PROJECT LOCATION	COORDINATES	GROUND ELEVATION (DATUM)	TOTAL DEPTH
Monroe, Michigan	N 9504.3' E 5350.4'	578.0 ft (NAVD 88)	18.0 (feet)

SURFACE CONDITIONS	COORDINATE SYSTEM	DATE START	DATE FINISHED
Level, grass cover, North of North Cooling Tower	Plant	05/23/07	05/23/07

LOGGED BY	CHECKED BY	APPROVED BY
Duncan	Meyer EM	Meyer EM

SAMPLING							CORING									
SAMPLE TYPE	SAMPLE NUMBER	SET 6 INCHES	2ND 6 INCHES	3RD 6 INCHES	N VALUE	SAMPLE RECOVERY	CORE SIZE	RUN NUMBER	RUN LENGTH	RUN RECOVERY	RQD RECOVERY	PERCENT RECOVERY	RQD	DEPTH (FEET)	SAMPLE TYPE	ELEVATION (FEET)	GRAPHIC LOG	CLASSIFICATION OF MATERIALS	REMARKS
SPT	4	3	6		7	13	1.4							15		563			TV = 1.5 TSF @ 15.0'.
														16		562			
														17		561			
														18		560			Bottom of boring @ 18.0'. Water level not recorded. Piezometer installed on 05/23/07.
														19		559			
														20		558			
														21		557			
														22		556			
														23		555			
														24		554			
														25		553			
														26		552			
														27		551			
														28		550			
														29		549			
														30		548			

BLACK & VEATCH

BORING LOG

BORING NO. P-399D

CLIENT	PROJECT	PROJECT NO.
Detroit Edison	Fermi 3 COL Application	147483

PROJECT LOCATION	COORDINATES	GROUND ELEVATION (DATUM)	TOTAL DEPTH
Monroe, Michigan	N 2565.6' E 5228.7'	574.7 ft (NAVD 88)	104.0 (feet)

SURFACE CONDITIONS	COORDINATE SYSTEM	DATE START	DATE FINISHED
Flat road surface adjacent to wetland	Plant	05/03/07	05/06/07

LOGGED BY	CHECKED BY	APPROVED BY
Ohlmacher GCO	Dogbey/Ohlmacher GCO for	Meyer EM

SAMPLING							CORING									
SAMPLE TYPE	SAMPLE NUMBER	SET 6 INCHES	2ND 6 INCHES	3RD 6 INCHES	N VALUE	SAMPLE RECOVERY	CORE SIZE	RUN NUMBER	RUN LENGTH	RUN RECOVERY	RQD RECOVERY	PERCENT RECOVERY	RQD	DEPTH (FEET)	SAMPLE TYPE	ELEVATION (FEET)	GRAPHIC LOG	CLASSIFICATION OF MATERIALS	REMARKS
														0		574		Undifferentiated overburden (see log for P-399P)	Boring advanced w/4¼" ID, 8" OD hollow stem auger without center bit. Drilled 2'; gravel inside hollow stem. Installed center bit, redrilled to 2'. SPT performed w/D-50 automatic hammer.
SPT	1	2	1	3	4	1.1								1		573			
														2		572		2.0 — ORGANIC Soil (OH) - About 100% high plasticity, high toughness, no dilatancy fines; very dark grayish brown; soft; moist; organic odor; no reaction w/HCl; homogeneous w/organics; (Topsoil). 2.5	
SPT	2	2	2	4	6	1.2								3		571		Lean CLAY (CL) - About 95% low plasticity, medium toughness, no dilatancy fines; about 5% coarse, subrounded, hard sand; grayish brown; firm; moist; no reaction w/HCl; homogeneous; w/trace roots; (Lacustrine Deposit).	
														4		570			
														5		569		grades w/trace gravel, max. size 1½" @ 5'	
														6		568			PP=2.0 TSF
SPT	3	2	5	11	16	1.7								7		567		6.5 — Sandy Lean CLAY (CL) - About 70% medium plasticity, medium toughness, slow dilatancy fines; about 30% fine to coarse, angular to subrounded, hard (fractured w/2 hammer blows) sand; red to reddish brown; hard; moist; strong reaction w/HCl; homogeneous; (Glacial Till).	
														8		566		8.0 — Sandy SILT (ML) - About 70% low plasticity, low toughness, rapid dilatancy fines; about 30% fine to coarse, angular to subrounded sand; brown; hard; moist; strong reaction w/HCl; homogeneous; (Glacial Till).	
SPT	4	5	7	10	17	1.8								9		565			PP>4.5 TSF
														10		564		10.5 — Sandy SILT (ML) - About 60% low plasticity, low toughness, rapid dilatancy fines; about 30% fine to coarse, subangular to subrounded sand; about 10% fine, subangular to subrounded, soft to hard gravel, max. size ½"; brown; hard; moist; strong reaction w/HCl; homogeneous; (Glacial Till).	
SPT	5	2	9	15	24	1.4								11		563			
SPT	6	8	14	17	31	1.3								12		562		grades very hard @ 11.5'	
														13		561		grades hard; gravel, max. size 1" @ 13'	
SPT	7	7	13	15	28	0.8								14		560		grades gray @ 14'	PP>4.5 TSF
														15					

BLACK & VEATCH

BORING LOG

BORING NO. P-399D

CLIENT	PROJECT	PROJECT NO.
Detroit Edison	Fermi 3 COL Application	147483

PROJECT LOCATION	COORDINATES	GROUND ELEVATION (DATUM)	TOTAL DEPTH
Monroe, Michigan	N 2565.6' E 5228.7'	574.7 ft (NAVD 88)	104.0 (feet)

SURFACE CONDITIONS	COORDINATE SYSTEM	DATE START	DATE FINISHED
Flat road surface adjacent to wetland	Plant	05/03/07	05/06/07

LOGGED BY	CHECKED BY	APPROVED BY
GCO Ohlmacher	Ew for GCO Dogbey/Ohlmacher	EM Meyer

SAMPLING							CORING									
SAMPLE TYPE	SAMPLE NUMBER	SET 6 INCHES	2ND 6 INCHES	3RD 6 INCHES	N VALUE	SAMPLE RECOVERY	CORE SIZE	RUN NUMBER	RUN LENGTH	RUN RECOVERY	RQD RECOVERY	PERCENT RECOVERY	RQD	DEPTH (FEET)	ELEVATION (FEET)	CLASSIFICATION OF MATERIALS	REMARKS
SPT	8	6	8	12	20	1.4								15		grades dark gray @ 15'	
															559		
														16			
SPT	9	6	14	27	41	1.4									558		
														17		grades w/sand lenses, 0.4' spacing, up to 1" thick @ 17.0'	
															557		
SPT	10	2	8	27	35	1.2								18			
															556		
														19			
																19.3	Sand heaving: cleaned out augers w/4¼" tricone roller bit w/water as drilling fluid. PP>4.5 TSF @ 20.0'
SPT	11	6	10	17	27	1.3									555	Sandy Lean CLAY (CL) - About 70% medium plasticity, medium toughness, no dilatancy fines; about 20% fine to coarse, subangular to subrounded sand; about 10% fine, subangular to subrounded gravel w/max. size 5/8", fractured w/1 hammer blow; dark gray; hard; moist; strong reaction w/HCl; homogeneous; (Glacial Till).	
														20			
															554		
														21			
SPT	12	7	10	16	26	0.3									553		
														22			
SPT	13	8	11	14	25	1.5									552		
														23			
															551		
SPT	14	12	10	13	23	1.2								24			
															550		
														25			
																25.5	
SPT	15	16	26	17	43	1.1									549	Poorly graded GRAVEL with Silt and Sand (GP-GM) - About 70% fine to coarse angular gravel, max. size 1"; about 20% fine to coarse, angular sand; about 10% fines; gray; dense; slight reaction w/HCl; (Weathered Bass Islands Group).	
														26			
SPT	16	50/4	-	-	50+	NR									548		@ 26.5' gravel inside hollow stem. Cleaned out w/4¼" tricone bit w/ water as drilling fluid. Auger refusal @ 26.8'. Set nominal 6" temporary steel casing to 28.5'.
			26.8											27			
															547		
PQ	1	2.2	2.2	0.4	100	18								28			
															546		
			29.0											29			
															545	20°,J,No,No,St,Slk @ 29.5' grades w/very close joint spacing @29.5-32.0'	
														30			

BLACK & VEATCH

BORING LOG

BORING NO. P-399D

CLIENT	PROJECT	PROJECT NO.
Detroit Edison	Fermi 3 COL Application	147483

PROJECT LOCATION	COORDINATES	GROUND ELEVATION (DATUM)	TOTAL DEPTH
Monroe, Michigan	N 2565.6' E 5228.7'	574.7 ft (NAVD 88)	104.0 (feet)

SURFACE CONDITIONS	COORDINATE SYSTEM	DATE START	DATE FINISHED
Flat road surface adjacent to wetland	Plant	05/03/07	05/06/07

LOGGED BY	CHECKED BY	APPROVED BY
GCO Ohlmacher	Emfo GCO Dogbey/Ohlmacher	Em Meyer

SAMPLING							CORING									
SAMPLE TYPE	SAMPLE NUMBER	SET 6 INCHES	2ND 6 INCHES	3RD 6 INCHES	N VALUE	SAMPLE RECOVERY	CORE SIZE	RUN NUMBER	RUN LENGTH	RUN RECOVERY	RQD RECOVERY	PERCENT RECOVERY	RQD	DEPTH (FEET)	SAMPLE TYPE	ELEVATION (FEET)	GRAPHIC LOG	CLASSIFICATION OF MATERIALS	REMARKS
														30				numerous vertical joints, healed-No,T,UK-No,Sp-No, Pl,SR @ 29.5-32.0'	Below 26.8' continued w/ triple tube wire line core barrel w/diamond bit using water as drilling fluid. Core box #1 starts @ 26.8'.
																544		0°,B,T,No,No,Pl,SR @ 30.0-30.4'; 4 joints	
														31				15°,J,T,No,No,Pl,S @ 30.5'	
							PQ	2	5.0	4.6	1.4	92	28			543			
														32				0°,B,T,No,No,Pl,S @ 32.1'	
																542		90°,J,T,No,No,Pl,SR @ 32.1-33.0'	
														33				5°,J,T,UK,Pa,Pl,SR @ 33.1'	
																541		0°,B,T,No,No,Pl,SR @ 33.5'	
																		90°,J,T,No,No,Pl,SR @ 33.6-34.0'	
										34.0				34				fractured @ 34.0-34.3'	
																540		0°,B,T,No,No,Pl,SR @ 34.3-34.5', 35.3-35.4' two bedding planes	
														35				15°,J,T,Ca,Pa,Pl,SR @ 34.5-35.2'	
																539		0°,B,T,No,No,Pl,SR @ 34.9'	
														36				70°,J,N,No,No,Ir,VR @ 35.8'	
																538		0°,B,VN,No,No,Pl,R @ 35.9'	
							PQ	3	5.0	5.0	1.2	100	24					90°,J,T,No,No,WA,R @ 36.1-36.3'	
																		0°,B,T,No,No,Pl,SR @ 36.3'	
														37		537		50°,J,T,No,No,Pl,SR @ 36.5-36.9' grades w/5% vugs up to ½" @ 37.0'	No drilling fluid return @ 37.0'. Core box #2 starts @ 37.0'.
																		0°,J,T,No,No,Ir,SR @ 37.0'	
														38				20°,J,T,No,No,Pl,S @ 37.2-37.5'	
																536		fractured @ 37.4-37.7'	
										39.0				39					
																535		fractured @ 39.4-39.7'	
														40				brecciated, healed fractures @ 39.7-40.1'	
																		grades brownish gray, thin bedded to massive @ 40'	
																		60°,J,N,No,No,Pl,SR @ 40.1-40.5'	
																534		70°,J,N,Cl,Fi,Pl,SR @ 40.6-41.5'	
														41				30°,J,VN,No,No,Ir,R @ 40.7'	
							PQ	4	5.0	4.8	3.1	96	62						
																533		10°,J,VN,No,No,Ir,R @ 41.6'	
														42					
																532		grades gray @ 42.6'	
														43				50°,J,W,Sd,Fi,Pl,R @ 43.1-43.5'	
																531			
										44.0				44				fractured @ 44.0-44.6'	
																530		50°,J,VN,Ca,Fi,St,SR @ 44.6-44.8'	
														45					

BLACK & VEATCH

BORING LOG

BORING NO. P-399D
SHEET 4 OF 8

CLIENT	PROJECT	PROJECT NO.
Detroit Edison	Fermi 3 COL Application	147483

PROJECT LOCATION	COORDINATES	GROUND ELEVATION (DATUM)	TOTAL DEPTH
Monroe, Michigan	N 2565.6' E 5228.7'	574.7 ft (NAVD 88)	104.0 (feet)

SURFACE CONDITIONS	COORDINATE SYSTEM	DATE START	DATE FINISHED
Flat road surface adjacent to wetland	Plant	05/03/07	05/06/07

LOGGED BY	CHECKED BY	APPROVED BY
Ohlmacher GCO	Dogbey/Ohlmacher GCO	Meyer EM

SAMPLING							CORING									
SAMPLE TYPE	SAMPLE NUMBER	SET 6 INCHES	2ND 6 INCHES	3RD 6 INCHES	N VALUE	SAMPLE RECOVERY	CORE SIZE	RUN NUMBER	RUN LENGTH	RUN RECOVERY	RQD RECOVERY	PERCENT RECOVERY	RQD	DEPTH (FEET)	SAMPLE TYPE	ELEVATION (FEET)	GRAPHIC LOG	CLASSIFICATION OF MATERIALS	REMARKS
PQ	5	5.0	4.9	3.4	98	68								45		529		fractured @ 45.1-45.4' 30°,J,VN,Ca,Sp,St,SR @ 45.1'	
														46				10°,J,T,No,No,St,SR @ 46.1' fractured @ 46.3-46.5'	Core box #3 starts @ 46.3'.
																528			
														47		527		75°,J,T,No,No,Pl,SR @ 47.3-47.7'	
														48		526		10°,J,W,Sd,Pa,Pl,R @ 48.4'	
			49.0											49		525		fractured, clayey sand infilling @ 49.0-49.7'	
PQ	6	2.0	1.5	0.4	75	20								50		524		15°,J,Pl @ 49.9' 0°,J,Ca,Sp,Pl,SR @ 50.3'	
																		50.5 SHALE; dolomitic; dark gray; micritic; slightly weathered; strong; hard; closely spaced joints; (Salina Group Unit F).	
			51.0											51		523			
														52				52.0 DOLOMITE; dark gray; very fine grained; slightly weathered; strong; hard; closely spaced joints; interbedded w/shale; (Salina Group Unit F). dolomitic gravel @ 52.0-52.2' 0°,J,W,Cl,Fi,Pl,SR @ 52.5' 10°,J,No,No,Pl,SR @ 52.8'	
PQ	7	3.0	1.6	0.7	53	23										522			
														53		521			
			54.0											54		520		90°,J,Ca,Sp,Pl,SR @ 54.0-54.5' fractured @ 54.2-54.4' 25°,J,No,No,Pl,SR @ 54.5' 15°,J,T,No,No,Pl,SR @ 54.8' grades brownish gray, 10% vugs @ 54.8' fractured @ 54.9-55.3' 10°,J,VN,No,No,Pl,SR @ 55.1' 90°,J,T,No,No,Pl,SR @ 55.1' fractured @ 55.8-56.5'	
														55		519			
														56		518			
PQ	8	5.0	4.8	0.5	96	10												45°,J,T,No,No,St,R @ 56.5-56.7' 0°,B,T,Ca,Sp,Pl,SR @ 56.8' fractured @ 56.9-57.4'	
														57		517		0°,V,W,Ca,Fi,Ir,R @ 57.5-57.7'	
																		57.6 DOLOMITE; brownish gray & gray; crystalline; very fine grained; slightly weathered; strong; hard; 20% vugs; (Salina Group Unit F). 90°,J,N,No,No,Pl,SR @ 57.7-58.4'	Core box #4 starts @ 58.5'.
														58		516			
			59.0											59				58.3 DOLOMITE; gray; crystalline; very fine grained; slightly weathered; strong; hard; massive; no vugs; (Salina Group Unit F).	
														60		515			

BLACK & VEATCH

BORING LOG

BORING NO. P-399D

CLIENT	PROJECT	PROJECT NO.
Detroit Edison	Fermi 3 COL Application	147483

PROJECT LOCATION	COORDINATES	GROUND ELEVATION (DATUM)	TOTAL DEPTH
Monroe, Michigan	N 2565.6' E 5228.7'	574.7 ft (NAVD 88)	104.0 (feet)

SURFACE CONDITIONS	COORDINATE SYSTEM	DATE START	DATE FINISHED
Flat road surface adjacent to wetland	Plant	05/03/07	05/06/07

LOGGED BY	CHECKED BY	APPROVED BY
Ohlmacher GCO	Dogbey/Ohlmacher GCO	Meyer EM

SAMPLING							CORING									
SAMPLE TYPE	SAMPLE NUMBER	SET 6 INCHES	2ND 6 INCHES	3RD 6 INCHES	N VALUE	SAMPLE RECOVERY	CORE SIZE	RUN NUMBER	RUN LENGTH	RUN RECOVERY	RQD RECOVERY	PERCENT RECOVERY	RQD	DEPTH (FEET)	SAMPLE TYPE	ELEVATION (FEET)	GRAPHIC LOG	CLASSIFICATION OF MATERIALS	REMARKS
														60		514		0°,J,Cl,Sp,Pl,R @ 58.4' closely spaced joints @ 58.4-59.0' fractured @ 59.0-60.5'	
														61				60.5 SHALE; w/calcite sand; moderately weathered; weak; friable; (Salina Group - Unit F).	
PQ	9	2.7	1.5	0.0	56	0	PQ	9	2.7	1.5	0.0	56	0			513			
			61.7							61.7				62				62.0 DOLOMITE; brownish gray; vuggy; micritic; slightly weathered; strong; hard; banded; 10% vugs up to 1"; w/shale bands up to 1" thick; (Salina Group - Unit F). highly fractured @ 62.0-63.1'	
PQ	10	2.1	2.1	0.7	100	29	PQ	10	2.1	2.1	0.7	100	29	63		512			
																511		0°,J,Pl,SR @ 63.5' fractured @ 63.8-66.6'	
			63.8							63.8				64					
																510			
														65				0°,B,T,No,No,Pl,SR @ 65.2' 90°,J,T,No,No,Pl,SR @ 65.2-65.8'	
PQ	11	3.6	2.3	0.0	64	0	PQ	11	3.6	2.3	0.0	64	0			509			
														66				66.4 SHALE; gray; fresh; very weak; friable; (Salina Group - Unit F). 66.6	
			67.4							67.4				67		508		DOLOMITE; brownish gray; vuggy; micritic; slightly weathered; strong; hard; banded; 10% vugs up to 1"; w/shale bands up to 1" thick; (Salina Group - Unit F). fractured @ 67.4-68.4'	
PQ	12	1.6	1.0	0.4	63	25	PQ	12	1.6	1.0	0.4	63	25	68		507			
																506		0°,J,No,No,Pl,SR @ 68.4',68.8'	
			69.0							69.0				69				highly fractured, gravel @ 69.0-72.4'	
																505			
														70					
																504			
														71				grades 20% vugs @ 71.0'	
PQ	13	5.0	2.4	0.0	48	0	PQ	13	5.0	2.4	0.0	48	0			503			
														72					
																502		grades no vugs @ 72.4' 0°,J,No,No,Pl,R @ 72.4' 85°,J,VN,No,No,Pl,SR @ 72.4-72.9' fractured @ 72.9-73.1'	
														73					
																501		90°,J,T,No,No,Pl,SR @ 73.1-73.6' 80°,J,T,No,No,Pl,SR @ 73.1-73.6'	
			74.0											74				fractured @ 73.6-73.8' 74.0	
																500		CLAYSTONE; gray; highly weathered; w/dolomite bands; some dolomite bands are brecciated (poorly	
														75					

BLACK & VEATCH

BORING LOG

BORING NO. P-399D

CLIENT	PROJECT	PROJECT NO.
Detroit Edison	Fermi 3 COL Application	147483

PROJECT LOCATION	COORDINATES	GROUND ELEVATION (DATUM)	TOTAL DEPTH
Monroe, Michigan	N 2565.6' E 5228.7'	574.7 ft (NAVD 88)	104.0 (feet)

SURFACE CONDITIONS	COORDINATE SYSTEM	DATE START	DATE FINISHED
Flat road surface adjacent to wetland	Plant	05/03/07	05/06/07

LOGGED BY	CHECKED BY	APPROVED BY
Ohlmacher GCO	Dogbey/Ohlmacher GCO	Meyer EM

SAMPLING							CORING									
SAMPLE TYPE	SAMPLE NUMBER	SET 6 INCHES	2ND 6 INCHES	3RD 6 INCHES	N VALUE	SAMPLE RECOVERY	CORE SIZE	RUN NUMBER	RUN LENGTH	RUN RECOVERY	RQD RECOVERY	PERCENT RECOVERY	RQD	DEPTH (FEET)	SAMPLE TYPE	ELEVATION (FEET)	GRAPHIC LOG	CLASSIFICATION OF MATERIALS	REMARKS
														75		499		indurated to indurated) or highly fractured; (Salina Group - Unit F).	Core box #5 starts @ 75.6'.
							PQ	14	5.0	3.0	0.0	60	0	76		498			
														77		497			
														78		496			
										79.0				79		495			
							PQ	15	4.8	2.7	0.0	56	0	80		494			
														81		493			
														82		492			
														83		491		83.2 DOLOMITE; argillaceous; dark gray; very fine grained; highly weathered; very weak; friable; banded; (Salina Group - Unit F).	Core barrel jammed @ 83.8'.
										83.8				84		490			
							PQ	16	5.3	2.9	0.4	55	8	85		489		85.0 DOLOMITE; w/shale layers; highly weathered; 0.1'-0.2' dolomite fragments; (Salina Group - Unit F)	
														86		488			
														87		487			(a) PQ 16 drilled to 89.0'. After barrel was pulled, 1.1' of core still in hole. PQ 17 used to recover lost core. Recovered core added to PQ 16. After
										87.9				88		486		87.9 SHALE; gray; highly weathered to residual; weak; friable; banded; (Salina Group - Unit F).	
							PQ	17	1.1	(a)				89		485		89.0 SAND; gray; (Salina Group - Unit F).	
										89.0				90					

BLACK & VEATCH

BORING LOG

BORING NO. P-399D

CLIENT	PROJECT	PROJECT NO.
Detroit Edison	Fermi 3 COL Application	147483

PROJECT LOCATION	COORDINATES	GROUND ELEVATION (DATUM)	TOTAL DEPTH
Monroe, Michigan	N 2565.6' E 5228.7'	574.7 ft (NAVD 88)	104.0 (feet)

SURFACE CONDITIONS	COORDINATE SYSTEM	DATE START	DATE FINISHED
Flat road surface adjacent to wetland	Plant	05/03/07	05/06/07

LOGGED BY	CHECKED BY	APPROVED BY
GCO Ohlmacher	Emm for GCO Dogbey/Ohlmacher	Em Meyer

SAMPLING							CORING									
SAMPLE TYPE	SAMPLE NUMBER	SET 6 INCHES	2ND 6 INCHES	3RD 6 INCHES	N VALUE	SAMPLE RECOVERY	CORE SIZE	RUN NUMBER	RUN LENGTH	RUN RECOVERY	RQD RECOVERY	PERCENT RECOVERY	RQD	DEPTH (FEET)	SAMPLE TYPE	ELEVATION (FEET)	GRAPHIC LOG	CLASSIFICATION OF MATERIALS	REMARKS
														90		484			barrel pulled for PQ 17 the hole tagged @ 87.4'. Grab sample of sand labeled Core 1.
PQ								18	5.0	4.5	2.7	90	54	91		483		SHALE; gray; highly weathered to residual; weak; friable; banded; (Salina Group - Unit F).	
														92		482			
														93		481		grades w/dolomite bands @ 93.1'	
										94.0				94		480		fractured @ 94.0-96.3'	Core box #6 starts @ 94.0'.
														95		479		grades no dolomite bands; dark gray @ 95.4'	
PQ								19	5.0	3.2	0.7	64	14	96		478		95.6 DOLOMITE; (Salina Group - Unit F). 60°,J,No,No,Pl,SR @ 96.3-96.7' J,T,No,No,WA,R @ 96.9-97.4'	
														97		477		97.4 SHALE; (Salina Group - Unit F). highly fractured @ 97.4-99.0'	
														98		476		97.8 DOLOMITE; (Salina Group - Unit F). 30°,F,T,No,No,Pl,Slk @ 97.8',98.0' 98.6	
										99.0				99		475		99.0 SHALE; (Salina Group - Unit F). SAND; gray; (Salina Group - Unit F).	Water level @ 6.75' prior to drilling on 05/06/07.
														100		474		100.0 SHALE; gray; (Salina Group - Unit F).	
														101		473		101.0 DOLOMITE; gray; (Salina Group - Unit F). highly fractured @ 101.0-103.0'	
PQ								20	5.0	3.1	0.8	62	16	102		472			
														103		471		103.0 SHALE; gray; highly weathered; (Salina Group - Unit F).	
														104		470			Bottom of boring @ 104.0'. Water level not
														105					

BLACK & VEATCH

BORING LOG

BORING NO. P-399D

CLIENT	PROJECT	PROJECT NO.
Detroit Edison	Fermi 3 COL Application	147483

PROJECT LOCATION	COORDINATES		GROUND ELEVATION (DATUM)	TOTAL DEPTH
Monroe, Michigan	N 2565.6'	E 5228.7'	574.7 ft (NAVD 88)	104.0 (feet)

SURFACE CONDITIONS	COORDINATE SYSTEM	DATE START	DATE FINISHED
Flat road surface adjacent to wetland	Plant	05/03/07	05/06/07

LOGGED BY	CHECKED BY	APPROVED BY
Ohlmacher GCO	Dogbey/Ohlmacher GCO	Meyer EM

SAMPLING: SAMPLE TYPE | SAMPLE NUMBER | SET 6 INCHES | 2ND 6 INCHES | 3RD 6 INCHES | N VALUE | SAMPLE RECOVERY

CORING: CORE SIZE | RUN NUMBER | RUN LENGTH | RUN RECOVERY | RQD RECOVERY | PERCENT RECOVERY | RQD

DEPTH (FEET)	SAMPLE TYPE	ELEVATION (FEET)	GRAPHIC LOG	CLASSIFICATION OF MATERIALS	REMARKS
105					recorded. Piezometer installed on 05/30/07.
		469			
106					
		468			
107					
		467			
108					
		466			
109					
		465			
110					
		464			
111					
		463			
112					
		462			
113					
		461			
114					
		460			
115					
		459			
116					
		458			
117					
		457			
118					
		456			
119					
		455			
120					

BLACK & VEATCH

BORING LOG

BORING NO. P-399P

SHEET 1 OF 1

CLIENT	PROJECT	PROJECT NO.
Detroit Edison	Fermi 3 COL Application	147483

PROJECT LOCATION	COORDINATES	GROUND ELEVATION (DATUM)	TOTAL DEPTH
Monroe, Michigan	N 2569.1' E 5228.7'	574.7 ft (NAVD 88)	7.0 (feet)

SURFACE CONDITIONS	COORDINATE SYSTEM	DATE START	DATE FINISHED
Edge of gravel road bed.	Plant	05/01/07	05/01/07

LOGGED BY	CHECKED BY	APPROVED BY
GCC for Grainger	Meyer EM	Meyer EM

SAMPLING							CORING										
SAMPLE TYPE	SAMPLE NUMBER	SET 6 INCHES	2ND 6 INCHES	3RD 6 INCHES	N VALUE	SAMPLE RECOVERY	CORE SIZE	RUN NUMBER	RUN LENGTH	RUN RECOVERY	RQD RECOVERY	PERCENT RECOVERY	RQD	DEPTH (FEET)	SAMPLE TYPE	ELEVATION (FEET)	GRAPHIC LOG	CLASSIFICATION OF MATERIALS	REMARKS
GP	1					1.6								0		574		Poorly graded GRAVEL with Sand (GP) - About 50% fine to coarse, angular, hard gravel, w/max. size 2"; about 45% coarse, angular sand; about 5% silt; pinkish gray; moist; strong reaction w/HCl; homogeneous; (Fill).	Boring advanced w/2¼" OD geoprobe continuous barrel sampler.
														1		573			
														2		572		2.0 ORGANIC Soil (OL) - About 95% low plasticity, low toughness, no dilatancy, no dry strength organic material; about 5% clay fines; reddish black; moist; no odor; no reaction w/HCL; homogeneous; (Peat).	Water encountered @ 2.0'.
GP	2		3.0			0.0								3		571			
			4.0											4		570			
GP	3		4.5			1.1								5		569		5.0 Lean CLAY (CL) - About 90% medium plasticity, medium toughness, no dilatancy, medium dry strength fines; about 10% fine to medium, angular to rounded, hard sand; pinkish gray; moist; strong reaction w/HCl; laminated; (Lacustrine Deposit).	PP = 0.5 TSF Collected water sample 6'-7'.
GP	4		6.0			0.7								6		568			
														7		567			Bottom of boring @ 7.0'. Water level @ 6.0' @ completion of drilling. Boring backfilled w/14.9 lbs/gal cement-bentonite grout by tremie method.
														8		566			
														9		565			
														10		564			
														11		563			
														12		562			
														13		561			
														14		560			
														15					

5/30/2008 6:58 PM DTE-Fermi 3

BLACK & VEATCH

BORING LOG

BORING NO. CB-C1

SHEET 1 OF 9

CLIENT	PROJECT	PROJECT NO.
Detroit Edison	Fermi 3 COL Application	147483

PROJECT LOCATION	COORDINATES	GROUND ELEVATION (DATUM)	TOTAL DEPTH
Monroe, MI	N 6363.4' E 4451.9'	580.6 ft (NAVD 88)	128.0 (feet)

SURFACE CONDITIONS	COORDINATE SYSTEM	DATE START	DATE FINISHED
Gravel parking lot near storage garage	Plant	07/16/07	09/21/07

LOGGED BY	CHECKED BY	APPROVED BY
TB/KW GLA GLC for Mass/Ang/Grainger	GLC for Dogbey/Bonnie TB	Meyer

SAMPLING							CORING							DEPTH (FEET)	SAMPLE TYPE	ELEVATION (FEET)	GRAPHIC LOG	CLASSIFICATION OF MATERIALS	REMARKS
SAMPLE TYPE	SAMPLE NUMBER	SET 6 INCHES	2ND 6 INCHES	3RD 6 INCHES	N VALUE	SAMPLE RECOVERY	CORE SIZE	RUN NUMBER	RUN LENGTH	RUN RECOVERY	RQD RECOVERY	PERCENT RECOVERY	RQD						
														0		580		Well-graded GRAVEL with Sand (GW) - About 75% fine to coarse, angular to subangular, hard gravel w/ max. size 2"; about 25% fine to coarse, angular, hard sand; light olive brown; dry to moist; strong reaction w/HCl; homogeneous; (Fill).	Boring advanced w/vacuum excavation.
														1		579			
														2		578			
														3		577			
														4		576			
														5		575			
			6.0											6		574			Below 6.0' continued w/4" ID sonic continuous sampler w/ nominal 6" temporary steel casing advanced w/sampler.
S	1					NR								7		573			
														8		572			
														9		571			
			10.0											10		570		grades light gray; moist; @ 10.0-12.0'	Discrete sample S01A collected @ 10.0-11.5'
S	2					NR								11		569			Water level @ 9.5' on 07/24/07; boring @ 12.7'.
														12		568		12.0	Discrete sample S02A collected @ 12.0-12.7'
			12.75											13		567		Well-graded GRAVEL with Silt and Sand (GW-GM) - About 65% fine to coarse, angular to subangular, hard gravel w/max. size 2"; about 25% fine to coarse, angular, hard sand; about 10% low plasticity, low toughness, rapid dilatancy, low dry strength fines; light olive brown; moist; weak reaction w/HCl; homogeneous; (Fill).	Set nominal 6" temporary steel casing to 12.7'. Below 12.7' continued w/ NWJ rods & 4½" tricone bit using bentonite mud
SPT	3	5	1	2	3	0.9								14		566		12.7 Fat CLAY (CH) - About 100% high plasticity, high toughness, no dilatancy fines; gray; soft; moist;	
														15					

5/12/2008 5:34 PM DTE - Fermi 3 Geotech

BLACK & VEATCH

BORING LOG

BORING NO. CB-C1

CLIENT	PROJECT	PROJECT NO.
Detroit Edison	Fermi 3 COL Application	147483

PROJECT LOCATION	COORDINATES	GROUND ELEVATION (DATUM)	TOTAL DEPTH
Monroe, MI	N 6363.4' E 4451.9'	580.6 ft (NAVD 88)	128.0 (feet)

SURFACE CONDITIONS	COORDINATE SYSTEM	DATE START	DATE FINISHED
Gravel parking lot near storage garage	Plant	07/16/07	09/21/07

LOGGED BY	CHECKED BY	APPROVED BY
TB for EM for GLO for Mass/Ang/Grainger	EM for TB Dogbey/Bonnie	EM Meyer

SAMPLING: SAMPLE TYPE	SAMPLE NUMBER	SET 6 INCHES	2ND 6 INCHES	3RD 6 INCHES	N VALUE	SAMPLE RECOVERY	CORING: CORE SIZE	RUN NUMBER	RUN LENGTH	RUN RECOVERY	RQD RECOVERY	PERCENT RECOVERY	RQD	DEPTH (FEET)	SAMPLE TYPE	ELEVATION (FEET)	GRAPHIC LOG	CLASSIFICATION OF MATERIALS	REMARKS
														15		565		homogeneous; (Lacustrine Deposit).	as drilling fluid. SPT performed w/D-50 automatic hammer.
TW	4												1.5	16		564		—16.5— Lean CLAY (CL) - About 100% medium plasticity, medium toughness, no dilatancy fines; grayish brown; hard; moist; homogeneous; (Glacial Till).	PP = 1.75 TSF @ 14.0'.
														17		563			PP > 4.5 TSF @ 17.5'.
														18		562		grades 88% LL=41,PL=19 fines; about 12% sand; trace fine to coarse, subrounded gravel w/max. size ½", fractured w/2 hammer blows; light olive brown @ 18.0'	
TW	5												1.8	19		561			
														20		560			PP > 4.5 TSF @ 20.0'.
														21		559			TW-6 bent possibly on gravel or cobble.
TW	6												1.2	22		558			
														23		557		grades olive brown @ 22.5' —22.8— Lean CLAY with Sand (CL) - About 75% medium plasticity, medium toughness, no dilatancy fines; about 15% fine to coarse, subrounded to subangular sand; about 10% fine to coarse, subrounded to subangular gravel w/max. size 3/4", fractured w/2 hammer blows; dark green; very hard; moist; (Glacial Till).	
SPT	7	16	28	31	59	1.5								24		556			PP > 4.5 TSF @ 24.0'.
														25		555			
														26		554			PP > 4.5 TSF @ 26.5'.
SPT	8	21	24	27	51	1.4								27		553		—27.5— Silty GRAVEL (GM) - About 75% fine to coarse, subangular to subrounded gravel w/max. size 1½", fractured with 3 hammer blows; about 15% low plasticity, low toughness, slow dilatancy fines; about 10% medium to coarse, subangular to subrounded sand; gray; medium dense; wet; (Glacial Till).	
														28		552			
SPT	9	4	5	6	11	0.5								29		551			
														30					

BLACK & VEATCH

BORING LOG

BORING NO. CB-C1

CLIENT	PROJECT	PROJECT NO.
Detroit Edison	Fermi 3 COL Application	147483

PROJECT LOCATION	COORDINATES	GROUND ELEVATION (DATUM)	TOTAL DEPTH
Monroe, MI	N 6363.4' E 4451.9'	580.6 ft (NAVD 88)	128.0 (feet)

SURFACE CONDITIONS	COORDINATE SYSTEM	DATE START	DATE FINISHED
Gravel parking lot near storage garage	Plant	07/16/07	09/21/07

LOGGED BY	CHECKED BY	APPROVED BY
TB for EM GEO for Mass/Ang/Grainger	TB for Dogbey/Bonnie	EM Meyer

SAMPLING							CORING									
SAMPLE TYPE	SAMPLE NUMBER	SET 6 INCHES	2ND 6 INCHES	3RD 6 INCHES	N VALUE	SAMPLE RECOVERY	CORE SIZE	RUN NUMBER	RUN LENGTH	RUN RECOVERY	RQD RECOVERY	PERCENT RECOVERY	RQD	DEPTH (FEET)	SAMPLE TYPE	ELEVATION (FEET)	GRAPHIC LOG	CLASSIFICATION OF MATERIALS	REMARKS
SPT	10	5	17	50/3"		0.5						50+		30		550		30.0 Clayey GRAVEL (GC) - About 70% fine to coarse, subangular to subrounded gravel w/max. size 1½"; about 20% high plasticity, high toughness, no dilatancy fines; about 10% medium to coarse, subangular to subrounded sand; dark gray; very dense; moist; (Weathered Rock).	
														31		549			
														32		548		32.5 DOLOMITE; light brown & gray, mottled; micritic; fresh ; strong; hard; (Bass Islands Group).	Below 32.5' continued w/4" ID sonic continuous sampler w/ nominal 6" temporary steel casing advanced w/sampler. Sonic core stored in box labeled S1. Set nominal 6" temporary steel casing to 35.5'. Below 35.5' continued w/ triple tube wire line core barrel w/diamond bit using water as drilling fluid. Core box #1 starts @ 35.5'. No drilling fluid return @ 36.0'.
S	11					3.0								33		547			
														34		546			
														35		545		36.3 DOLOMITE; argillaceous; gray; micritic; slightly weathered; very strong; hard; w/dark gray partings; (Bass Islands Group). pitted @ 36.3-37.0', 39.4-39.7' 0°,B,N,No,No,Ir,R @ 37.2',38.7',38.8'	
														36		544			
														37		543			
PQ	1	5.0	4.5	3.8								90	76	38		542			
														39		541		0°,B,N,No,No,Ir,R @ 39.1',39.3',39.7'	
														40		540		90°,J,T,H,No,Ir @ 40.5' 0°,B,N,No,No,Ir,R @ 40.8',41.9' fractured @ 41.2-41.5'	
														41		539			
														42		538		0°,B,N,No,No,Ir,R @ 42.0'	
PQ	2	5.0	4.7	3.3								94	66	43		537		90°,J,T,H,No,Ir @ 42.7-43.4'	
														44		536		0°,B,N,No,No,Ir,R @ 43.6',43.7' 90°,J,T,H,No,Ir @ 43.8-44.1'	
														45				0°,B,N,No,No,Ir,R @ 44.4'	

BLACK & VEATCH

BORING LOG

BORING NO. CB-C1

CLIENT	PROJECT	PROJECT NO.
Detroit Edison	Fermi 3 COL Application	147483

PROJECT LOCATION	COORDINATES	GROUND ELEVATION (DATUM)	TOTAL DEPTH
Monroe, MI	N 6363.4' E 4451.9'	580.6 ft (NAVD 88)	128.0 (feet)

SURFACE CONDITIONS	COORDINATE SYSTEM	DATE START	DATE FINISHED
Gravel parking lot near storage garage	Plant	07/16/07	09/21/07

LOGGED BY	CHECKED BY	APPROVED BY
TB for EM GEO for Mass/Ang/Grainger	RM EC Dogbey/Bonnie TB	EM Meyer

SAMPLING							CORING									
SAMPLE TYPE	SAMPLE NUMBER	SET 6 INCHES	2ND 6 INCHES	3RD 6 INCHES	N VALUE	SAMPLE RECOVERY	CORE SIZE	RUN NUMBER	RUN LENGTH	RUN RECOVERY	RQD RECOVERY	PERCENT RECOVERY	RQD	DEPTH (FEET)	SAMPLE TYPE	ELEVATION (FEET)	GRAPHIC LOG	CLASSIFICATION OF MATERIALS	REMARKS
														45				45.3	
										45.5						535		DOLOMITE; grayish brown; micritic; fresh; very strong; hard; w/stylolites; (Bass Islands Group). 85-90°,J,T,No,No,Ir,R @ 45.3-46.2',46.3-50.5' 0°,B,UK,Su,Ir,SR @ 46.2'	Core box #2 starts @ 45.5'.
														46					
																534			
														47				pitted & vuggy @ 47.2-47.7'	
																533			
PQ	3	5.0	5.0	1.0	100	20								48				fractured @ 47.8-48.3' 0°,B,UK,Su,Ir,SR @ 47.8' 85-90°,J,T,No,No,Ir,R @ 47.8-48.9'	
																532			
														49				0°,B,UK,Su,Ir,SR @ 48.7'	
																531		85-90°,J,T,No,No,Ir,R @ 49.3-50.0' 0°,B,UK,Su,Ir,SR @ 49.4'	
														50					
										50.5						530		60°,J,N,No,No,Ir,R @ 50.5'	
																		0°,B,UK,Su,Ir,SR @ 51.0',51.2'	
														51				51.1	
																529		DOLOMITE; light gray & dark gray (mottled); micritic; fresh; very strong; hard; w/argillaceous partings & stylolites; (Bass Islands Group).	
														52					
																528		very closely spaced (1"), parallel 90°,J,T,No,No @ 52.4-53.9'	
PQ	4	5.0	5.0	1.0	100	20								53					
																527		fractured @ 53.3-53.9'	
																		0°,B,UK,Su,Ir,SR @ 53.7',53.9'	
														54				53.9	
																526		DOLOMITE; argillaceous; dark grayish brown; pitted; micritic; fresh; very strong; hard; (Bass Islands Group). 90°,J,T,No,No,Ir,R @ 53.9-57.2' 0°,B,UK,Su,Ir,SR @ 55.0'	
														55					
										55.5						525			Core box #3 starts @ 55.5'. Water level @ 15.0' prior to drilling on 08/30/07.
														56				0°,B,UK,Sp,Pl,SR @ 56.1',56.3'	
																524			
														57					
																523			
PQ	5	5.0	5.0	2.8	100	56								58					
																522			
														59				0°,B,UK,Sp,Pl,SR @ 59.1',59.2',59.4'	
																521		59.4 BRECCIA; healed; pinkish gray; micritic; dolomite	
														60					

BLACK & VEATCH

BORING LOG

BORING NO. CB-C1

CLIENT	PROJECT	PROJECT NO.
Detroit Edison	Fermi 3 COL Application	147483

PROJECT LOCATION	COORDINATES	GROUND ELEVATION (DATUM)	TOTAL DEPTH
Monroe, MI	N 6363.4' E 4451.9'	580.6 ft (NAVD 88)	128.0 (feet)

SURFACE CONDITIONS	COORDINATE SYSTEM	DATE START	DATE FINISHED
Gravel parking lot near storage garage	Plant	07/16/07	09/21/07

LOGGED BY	CHECKED BY	APPROVED BY
Mass/Ang/Grainger	Dogbey/Bonnie	Meyer

SAMPLING							CORING									
SAMPLE TYPE	SAMPLE NUMBER	SET 6 INCHES	2ND 6 INCHES	3RD 6 INCHES	N VALUE	SAMPLE RECOVERY	CORE SIZE	RUN NUMBER	RUN LENGTH	RUN RECOVERY	RQD RECOVERY	PERCENT RECOVERY	RQD	DEPTH (FEET)	SAMPLE TYPE	ELEVATION (FEET)	GRAPHIC LOG	CLASSIFICATION OF MATERIALS	REMARKS
														60				matrix w/light gray micritic dolomite clasts; fresh; very strong; hard; w/stylolites; (Bass Islands Group). fractured w/anhydrite crystals 59.4-60.5'	
			60.5											61		520		85-90°,J,T,No,No,Ir,VR @ 61.2-64.2'	
														62		519		fractured @ 62.1-63.6', 64.9-65.5'	
							PQ	6	5.0	5.0	1.7	100	34	63		518			
														64		517		60°,J,N,No,No,Ir,R @ 64.0'	
														65		516			Core box #4 starts @ 64.5'.
																515		64.9 — DOLOMITE; gray; micritic, fresh; very strong; hard; (Bass Islands Group). 90°,J,T,No,No,Ir,VR @ 65.5-66.7'	
			65.5											66		514			
														67		513		66.7 — DOLOMITE; oolitic; light brownish gray; very fine grained; fresh; strong; hard; massive w/few dark gray, argillaceous partings; (Bass Islands Group). 0°,B,N,No,No,WA,R @ 66.7'	
							PQ	7	5.0	5.0	4.7	100	94	68		512			
														69		511		60°,J,T,No,No,Pl,R @ 69.3'	
														70		510		70.3 — BRECCIA; healed; pinkish gray; micritic; dolomite matrix; w/light gray, micritic dolomite clasts; fresh; strong; hard; contorted bedding & stylolites; (Bass Islands Group). 0°,B,Cl,Fi @ 70.5' 90°,J,T,No,No,Ir,VR @ 71.8-73.7'	
			70.5											71		509			
														72		508		72.1 — 0°,B,N,No,No,WA,SR @ 72.1',72.3' DOLOMITE; gray; micritic; fresh; strong; hard; banded; w/argillaceous partings; (Bass Islands Group).	
							PQ	8	5.0	5.0	1.7	100	34	73		507		0°,B,N,No,No,WA,SR @ 73.7'	Core box #5 starts @ 73.7'.
														74		506		fractured @ 74.1-75.5' 10°,B,T,UK,Su,Pl,SR @ 74.1',74.7',74.9'	
														75					

BLACK & VEATCH

BORING LOG

BORING NO. CB-C1

CLIENT	PROJECT	PROJECT NO.
Detroit Edison	Fermi 3 COL Application	147483

PROJECT LOCATION	COORDINATES	GROUND ELEVATION (DATUM)	TOTAL DEPTH
Monroe, MI	N 6363.4' E 4451.9'	580.6 ft (NAVD 88)	128.0 (feet)

SURFACE CONDITIONS	COORDINATE SYSTEM	DATE START	DATE FINISHED
Gravel parking lot near storage garage	Plant	07/16/07	09/21/07

LOGGED BY	CHECKED BY	APPROVED BY
TB for GW Mass/Ang/Grainger	EM for TB Dogbey/Bonnie	EM Meyer

SAMPLING							CORING									
SAMPLE TYPE	SAMPLE NUMBER	SET 6 INCHES	2ND 6 INCHES	3RD 6 INCHES	N VALUE	SAMPLE RECOVERY	CORE SIZE	RUN NUMBER	RUN LENGTH	RUN RECOVERY	RQD RECOVERY	PERCENT RECOVERY	RQD	DEPTH (FEET)	SAMPLE TYPE	ELEVATION (FEET)	GRAPHIC LOG	CLASSIFICATION OF MATERIALS	REMARKS
														75				60°,J,T,No,No,Ir,R @ 75.2'	
										75.5						505		75.3 DOLOMITE; gray; micritic; fresh; strong; hard; w/ stylolites & few argillaceous partings; (Bass Islands Group).	
														76		504		10°,B,T,UK,Su,Pl,SR @ 75.3',75.4' 0-5°,B,UK,Sp,Ir,R @ 75.6',76.7'	
														77		503		fractured @ 76.0-76.9' 30°,J,UK,Sp,Ir,R @ 77.3'	
							PQ	9	5.0	5.0	2.7	100	54	78		502		0-5°,B,UK,Sp,Ir,R @ 78.2' fractured @ 78.2-78.3'	
														79		501		fractured @ 79.4-80.1' 0-5°,B,UK,Sp,Ir,R @ 79.4'	
										80.5				80		500		60°,J,T,No,No,Ir,VR @ 80.5'	
														81		499		5°,B,N,No,No,Ir,R @ 80.7' 5°,B,N,No,No,Ir,R @ 81.4'	
														82		498		5°,B,N,No,No,Ir,R @ 82.0' 70°,J,N,Ca,Pa,Pl,R @ 82.5'	
							PQ	10	5.0	4.5	2.7	90	54	83		497			
														84		496			
														85		495			Core box #6 starts @ 85.5'.
										85.5				86		494			
							PQ	11	2.5	2.5	1.8	100	72	87		493		fractured @ 87.7-88.4	
										88.0				88		492		0-5°,B,N (solutioned) @ 88.6'	
							PQ	12	2.5	2.3	1.3	92	52	89		491		0-5°,B,N,No,No,Ir,R @ 89.4' 85-90°,J,N,No,No,Ir,VR @ 89.4-90.5'	
														90					

BLACK & VEATCH

BORING LOG

BORING NO. CB-C1

CLIENT	PROJECT	PROJECT NO.
Detroit Edison	Fermi 3 COL Application	147483

PROJECT LOCATION	COORDINATES	GROUND ELEVATION (DATUM)	TOTAL DEPTH
Monroe, MI	N 6363.4' E 4451.9'	580.6 ft (NAVD 88)	128.0 (feet)

SURFACE CONDITIONS	COORDINATE SYSTEM	DATE START	DATE FINISHED
Gravel parking lot near storage garage	Plant	07/16/07	09/21/07

LOGGED BY	CHECKED BY	APPROVED BY
TB for EM GC for Mass/Ang/Grainger	EM for Dogbey/Bonnie TB	EM Meyer

SAMPLING: SAMPLE TYPE	SAMPLE NUMBER	SET 6 INCHES	2ND 6 INCHES	3RD 6 INCHES	N VALUE	SAMPLE RECOVERY	CORING: CORE SIZE	RUN NUMBER	RUN LENGTH	RUN RECOVERY	RQD RECOVERY	PERCENT RECOVERY	RQD	DEPTH (FEET)	SAMPLE TYPE	ELEVATION (FEET)	GRAPHIC LOG	CLASSIFICATION OF MATERIALS	REMARKS
														90					
										90.5						490		90°,J,N,No,No,Ir,R @ 90.5-92.3' dolomite; mottled gray & dark gray @ 90.8-91.7'	Core box #7 starts @ 90.5'.
														91				0°,B,N,No,No,Ir (solutioned) @ 91.3',91.6',91.7',92.0',	
							PQ	13	2.6	2.6	0.6	100	23			489			
														92				91.7 SHALE; gray; fissile; highly weathered; very weak; low hardness; (Bass Islands Group). 92.0	
																488		DOLOMITE; gray; micritic; fresh; strong; hard; w/ stylolites & few argillaceous partings; (Bass Islands Group).	
														93				0°,B,N,No,No,Ir (solutioned) @ 93.1'	Core barrel blocked.
										93.1						487			
							PQ	14	2.4	2.4	1.6	100	67	94				fractured @ 94.5-95.0'	
																486		94.5 SHALE; dark gray; fissile; slightly weathered; weak; medium hard; (Bass Islands Group). 0°,B,N,No,No,Ir (solutioned) @ 94.5',94.8'	
														95				94.9 DOLOMITE; gray; micritic; fresh; strong; hard; w/ stylolites & few argillaceous partings; (Bass Islands Group).	
										95.5						485		75°,J,T,No,No,Ir,VR (slightly weathered) @ 95.2-95.9'	
														96				0-10°,B,N,No,No,Ir,R (slightly weathered) @ 95.7', 95.5'	
																484		85-90° J,T,No,No,Ir,R @ 95.8-97.0'	
														97				50°,J,T,Ca,Fe,Pl,SR @ 96.5' slightly weathered, fractured @ 97.3-97.8'	
							PQ	15	5.0	4.8	2.7	96	54			483			
														98				50°,J,T,Ca,Fe,Pl,SR @ 97.7'	
																482		slightly weathered, fractured @ 98.7-98.9'	
														99					
																481			
														100				0-10°,B,N,No,No,Ir,R (slightly weathered) @ 99.9'	
										100.5						480		85° J,T,No,No,Ir,R @ 100.5-101.0'	Core box #8 starts @ 100.5'.
														101				50°,J,T,Ca,Fe,Pl,SR @ 101.3'	
																479			
														102					
																478			
							PQ	16	5.0	5.0	2.7	100	54	103				10° B,T,No,No,Pl,SR @ 102.9'	
																477		103.8 DOLOMITE; argillaceous; gray; micritic; slightly weathered; strong; hard; w/stylolites & argillaceous partings; (Bass Islands Group).	
														104		476		0-5° B,UK,Ca, slightly weathered @ 103.8', 104.9',	
														105					

BLACK & VEATCH

BORING LOG

BORING NO. CB-C1

CLIENT	PROJECT	PROJECT NO.
Detroit Edison	Fermi 3 COL Application	147483

PROJECT LOCATION	COORDINATES	GROUND ELEVATION (DATUM)	TOTAL DEPTH
Monroe, MI	N 6363.4' E 4451.9'	580.6 ft (NAVD 88)	128.0 (feet)

SURFACE CONDITIONS	COORDINATE SYSTEM	DATE START	DATE FINISHED
Gravel parking lot near storage garage	Plant	07/16/07	09/21/07

LOGGED BY	CHECKED BY	APPROVED BY
Mass/Ang/Grainger	Dogbey/Bonnie	Meyer

SAMPLING							CORING									
SAMPLE TYPE	SAMPLE NUMBER	SET 6 INCHES	2ND 6 INCHES	3RD 6 INCHES	N VALUE	SAMPLE RECOVERY	CORE SIZE	RUN NUMBER	RUN LENGTH	RUN RECOVERY	RQD RECOVERY	PERCENT RECOVERY	RQD	DEPTH (FEET)	SAMPLE TYPE	ELEVATION (FEET)	GRAPHIC LOG	CLASSIFICATION OF MATERIALS	REMARKS
														105				105.0'	
										105.5				106		475		90° J,T,No,No,Ir,R @ 105.5-106.2', 107.0-107.6' 0°,B,T,No,No,Pl,SR @ 105.5',105.6',105.8',106.2', 106.3', 106.6'	
														107		474			
														108		473		0°,B,T,No,No,Pl,SR @ 107.0' 0°,B,T,No,No,Pl,SR @ 107.4',107.6'	
PQ	17		5.0	4.7	2.0	94	40							109		472		argillaceous seams w/calcite crystals @ 108.0' 0°,B,T,No,No,Pl,SR @ 108.2' 0°,B,T,No,No,Pl,SR @ 108.6'	
														110		471		argillaceous seams w/calcite crystals @ 109.0',109.4' 0°,B,T,No,No,Pl,SR @ 109.6'	
										110.5				111		470		109.9 DOLOMITE; crystalline; gray; micritic; fresh; very strong; hard; (Bass Islands Group). 60°,J,N,No,No (slightly weathered) @ 110.5'	Core box #9 starts @ 110.5'.
														112		469		0°,B,T,No,No,WA,SR @ 110.9',111.1',111.2',111.8', 112.1' 85-90°,J,T,No,No,Ir,R @ 111.2-112.1',111.8-112.5', 112.7-113.2'	
PQ	18		5.0	4.7	3.1	94	62							113		468			
														114		467		0°,B,T,No,No,WA,SR @ 113.5'	
														115		466		85-90°,J,T,No,No,Ir,R @ 114.1-114.7' 0° B,T,Ca,Sp,WA,SR @ 114.1' 30° J,T,Ca,Sp,Pl,SR @ 114.8'	
										115.5				116		465			
														117		464		pyrite & black material filling cracks @ 116.5', 117.9' 60°,J,N,No,No (slightly weathered) @ 116.7-117.2'	
														118		463			
PQ	19		5.0	5.0	2.1	100	42							119		462		0° B,N,Cl,Sp,Ir,R @ 118.2', 118.6' 85-90° J,T,Cl,Sp,Ir,SR @ 118.2-119.3' fractured @ 118.6-119.3'	
														120		461		118.8 DOLOMITE; argillaceous; dark grayish brown; fresh; very strong; hard; w/stylolites & argillaceous partings; (Bass Islands Group).	

BLACK & VEATCH

BORING LOG

BORING NO. CB-C1

CLIENT	PROJECT	PROJECT NO.
Detroit Edison	Fermi 3 COL Application	147483

PROJECT LOCATION	COORDINATES	GROUND ELEVATION (DATUM)	TOTAL DEPTH
Monroe, MI	N 6363.4' E 4451.9'	580.6 ft (NAVD 88)	128.0 (feet)

SURFACE CONDITIONS	COORDINATE SYSTEM	DATE START	DATE FINISHED
Gravel parking lot near storage garage	Plant	07/16/07	09/21/07

LOGGED BY	CHECKED BY	APPROVED BY
TB for EMP Grofer Mass/Ang/Grainger	EM for TB Dogbey/Bonnie	EM Meyer

SAMPLING							CORING										
SAMPLE TYPE	SAMPLE NUMBER	SET 6 INCHES	2ND 6 INCHES	3RD 6 INCHES	N VALUE	SAMPLE RECOVERY	CORE SIZE	RUN NUMBER	RUN LENGTH	RUN RECOVERY	RQD RECOVERY	PERCENT RECOVERY	RQD	DEPTH (FEET)	SAMPLE TYPE	ELEVATION (FEET)	GRAPHIC LOG	CLASSIFICATION OF MATERIALS	REMARKS
														120		460		10°,B,N,An,Fi @ 119.3'	
			120.5											121		459		70°,J,N,No,No,Ir,R (slightly weathered) @ 120.9', 122.7'	Core box #10 starts @ 120.5'.
PQ	20	2.5	2.5	2.2	100	88								122		458		80°,J,N,No,No,Ir,R (slightly weathered) @ 122.7'	
			123.0											123		457		10°,B,N,Cl, weathered @ 122.8'	
														124		456		90°,J,T,No,No,Ir,VR @ 124.2-125.7'	
PQ	21	5.0	4.3	2.1	86	42								125		455		125.2 DOLOMITE; interbedded gray & very dark gray; micritic; slightly weathered; strong; hard; interbedded w/bands of SHALE; weak, low hardness fissile; (Salina Group - Unit F). 5°,B,T,No,No,Pl,R @ 125.2',125.8',126.0',126.4'	
														126		454		126.4 CLAYSTONE; dark gray; micritic; highly weathered; weak; low hardness; interbedded w/partings & seams of micritic dolomite; (Salina Group - Unit F).	
														127		453			
														128		452			Bottom of boring @ 128.0'. Water level not recorded @ completion of drilling. Boring backfilled w/ bentonite chips on 09/21/07.
														129		451			
														130		450			
														131		449			
														132		448			
														133		447			
														134		446			
														135					

BLACK & VEATCH

BORING LOG

BORING NO. CB-C2

CLIENT	PROJECT	PROJECT NO.
Detroit Edison	Fermi 3 COL Application	147483

PROJECT LOCATION	COORDINATES	GROUND ELEVATION (DATUM)	TOTAL DEPTH
Monroe, MI	N 6353.2' E 4517.1'	580.5 ft (NAVD 88)	271.0 (feet)

SURFACE CONDITIONS	COORDINATE SYSTEM	DATE START	DATE FINISHED
Gravel parking area	Plant	07/18/07	08/01/07

LOGGED BY	CHECKED BY	APPROVED BY
TB Bonnie/Ang/Grainger	TB Dogbey/Bonnie	Meyer

SAMPLING: SAMPLE TYPE	SAMPLE NUMBER	SET 6 INCHES	2ND 6 INCHES	3RD 6 INCHES	N VALUE	SAMPLE RECOVERY	CORING: CORE SIZE	RUN NUMBER	RUN LENGTH	RUN RECOVERY	RQD RECOVERY	PERCENT RECOVERY	RQD	DEPTH (FEET)	ELEVATION (FEET)	CLASSIFICATION OF MATERIALS	REMARKS
														0	580	Silty COBBLES with Sand - About 60% angular, very hard cobbles w/max. size 9"; about 20% fine to coarse, spherical to elongated, hard sand; about 20% fines; dark gray; strong reaction w/HCl; homogeneous; (Fill).	Boring advanced w/vacuum excavation.
														1	579		
														2	578		
														3	577		
														4	576		
														5	575		
										6.0				6	574		Below 6.0' continued w/4" ID sonic continuous sampler w/ nominal 6" temporary steel casing advanced w/sampler.
S	1												NR	7	573		
														8	572		
														9	571		
										10.0				10	570		
														11	569		Discrete sample collected @ 11.0-12.0'.
S	2												NR	12	568		
														13	567	13.0 Fat CLAY (CH) - About 100% high plasticity, high toughness, no dilatancy fines; gray; firm; moist; no reaction w/HCl; (Lacustrine Deposit).	
														14	566		
														15			

BLACK & VEATCH

BORING LOG

BORING NO. CB-C2

CLIENT	PROJECT	PROJECT NO.
Detroit Edison	Fermi 3 COL Application	147483

PROJECT LOCATION	COORDINATES	GROUND ELEVATION (DATUM)	TOTAL DEPTH
Monroe, MI	N 6353.2' E 4517.1'	580.5 ft (NAVD 88)	271.0 (feet)

SURFACE CONDITIONS	COORDINATE SYSTEM	DATE START	DATE FINISHED
Gravel parking area	Plant	07/18/07	08/01/07

LOGGED BY	CHECKED BY	APPROVED BY
TB Bonnie/Ang/Grainger	Dogbey/Bonnie	Meyer

SAMPLING: SAMPLE TYPE	SAMPLE NUMBER	SET 6 INCHES	2ND 6 INCHES	3RD 6 INCHES	N VALUE	SAMPLE RECOVERY	CORING: CORE SIZE	RUN NUMBER	RUN LENGTH	RUN RECOVERY	RQD RECOVERY	PERCENT RECOVERY	RQD	DEPTH (FEET)	ELEVATION (FEET)	CLASSIFICATION OF MATERIALS	REMARKS
														15	565		Below 15.5' continued w/NWJ rod, 4½" tricone bit using bentonite mud as drilling fluid. SPT performed w/D-50 automatic hammer.
										16.0				16	564	grades about 96% LL=51,PL=20 fines; about 4% sand; trace fine to coarse, subrounded gravel w/max. size ½"; fractured w/2 hammer blows	
TW	3					1.5								17	563		
														18	562	18.3	
																Lean CLAY (CL) - About 100% medium plasticity, medium toughness, no dilatancy fines; trace fine, subrounded gravel w/max. size ½"; light olive brown; hard; moist; (Glacial Till).	PP = 2.0 TSF @ 18.0'.
TW	4					1.6								19	561		
														20	560		
														21	559		PP = 4.5 TSF @ 20.5'.
TW	5					1.4								22	558	grades olive brown	
														23	557	23.3	
																Lean CLAY with Gravel (CL) - About 80% medium plasticity, medium toughness, no dilatancy fines; about 20% fine to coarse, subangular to subrounded, hard gravel w/max. size 1"; dark gray; very hard	PP > 4.5 TSF @ 22.7'. PP > 4.5 TSF @ 24.0'.
SPT	6	19	30	25	55	1.8								24	556		
														25	555		
SPT	7	18	20/0"		50+	0.6								26	554		PP > 4.5 TSF @ 26.3'.
														27	553	27.0	
										27.5						DOLOMITE; light brownish gray & dark gray, mottled; micritic; fresh; strong; hard; (Bass Islands Group).	Below 27.5' continued w/4" ID sonic continuous sampler w/ nominal 6" temporary steel casing advanced w/sampler.
														28	552		
S	1					3.2								29	551	mottled light gray & dark gray @ 28.5-28.7'	
														30			

BLACK & VEATCH

BORING LOG

BORING NO. CB-C2

CLIENT	PROJECT	PROJECT NO.
Detroit Edison	Fermi 3 COL Application	147483

PROJECT LOCATION	COORDINATES	GROUND ELEVATION (DATUM)	TOTAL DEPTH
Monroe, MI	N 6353.2' E 4517.1'	580.5 ft (NAVD 88)	271.0 (feet)

SURFACE CONDITIONS	COORDINATE SYSTEM	DATE START	DATE FINISHED
Gravel parking area	Plant	07/18/07	08/01/07

LOGGED BY	CHECKED BY	APPROVED BY
TB EM GEO for Bonnie/Ang/Grainger	EM for TB Dogbey/Bonnie	Meyer EM

SAMPLING							CORING									
SAMPLE TYPE	SAMPLE NUMBER	SET 6 INCHES	2ND 6 INCHES	3RD 6 INCHES	N VALUE	SAMPLE RECOVERY	CORE SIZE	RUN NUMBER	RUN LENGTH	RUN RECOVERY	RQD RECOVERY	PERCENT RECOVERY	RQD	DEPTH (FEET)	SAMPLE TYPE	ELEVATION (FEET)	GRAPHIC LOG	CLASSIFICATION OF MATERIALS	REMARKS
														30		550			Sample SC-1 stored in box labeled S1. Set nominal 6" casing to 30.5'. Below 30.7' continued w/triple tube wire line core barrel w/diamond bit using water as drilling fluid. Core box #1 starts @ 30.7'.
PQ	1	0.3	30.7				PQ	1	0.3	0.3	0.0	100	0	31		549		30.7 DOLOMITE; crystalline; grayish brown; micritic; slightly weathered; very strong; hard; thick bedded w/stylolites; (Bass Islands Group).	
			31.0											32		548		0°,B, fractured @ 31.9-32.0'	
PQ	2	5.0	5.0				PQ	2	5.0	5.0	4.1	100	82	33		547		0°,B,N,Pa,Pl,SR @ 33.2', 33.9' 90° intersecting,J (70° intersection),T,No,No,Ir,VR @ 33.2-34.7'; partial Ca,Fi @ 34.2-34.6'	
														34		546		85°-90°,J,T,No,No,Ir,VR @ 34.6-36.7' pitted @ 34.9-35.5'	
														35		545			
			36.0											36		544		0°,B,MW (solutioned) @ 35.9'	
PQ	3	5.0	4.9				PQ	3	5.0	4.9	1.5	98	30	37		543		0°,B,N,No,No,Pl,Ir,SR @ 37.5', 38.2', 38.5', 38.8' fractured zone 37.5-41.0' due to intersecting vertical joints & bedding	
														38		542			
														39		541		0°,B,N,No,No,Pl,Ir,SR @ 39.1', 39.3', 39.5'	Core box #2 starts @ 39.5'.
														40		540		85-90°,Two joints (70° intersection),T,No,No,Ir,VR @ 39.6-42.5' 0°,B,N,No,No,Pl,Ir,SR @ 39.7', 39.9', 40.0',40.3'	
			41.0											41		539		0°,B,N,No,No,Pl,Ir,SR @ 40.6', 40.7', 40.9'	100% drilling fluid loss @ 41.0'.
														42		538		0°,B,N,No,No,Pl,SR @ 42.0', 43.2', 43.3' 50°,J,T,No,No,Ir,SR @ 42.5'	
PQ	4	5.0	5.0				PQ	4	5.0	5.0	4.5	100	90	43		537		85°,J,T,No,No,Ir,R @ 42.9-43.6', 49.8' pitted @ 43.0-43.2', 45.0-45.5'	Drill chatter @ 43.0-44.0'.
														44		536		stylolites increasing frequency @ 43.8-46.0'	
														45					

BLACK & VEATCH

BORING LOG

BORING NO. CB-C2

CLIENT	PROJECT	PROJECT NO.
Detroit Edison	Fermi 3 COL Application	147483

PROJECT LOCATION	COORDINATES	GROUND ELEVATION (DATUM)	TOTAL DEPTH
Monroe, MI	N 6353.2' E 4517.1'	580.5 ft (NAVD 88)	271.0 (feet)

SURFACE CONDITIONS	COORDINATE SYSTEM	DATE START	DATE FINISHED
Gravel parking area	Plant	07/18/07	08/01/07

LOGGED BY	CHECKED BY	APPROVED BY
TB ECA GCO for Bonnie/Ang/Grainger	Ernie for TB Dogbey/Bonnie	Em Meyer

SAMPLE TYPE	SAMPLE NUMBER	SET 6 INCHES	2ND 6 INCHES	3RD 6 INCHES	N VALUE	SAMPLE RECOVERY	DEPTH (FEET)	ELEVATION (FEET)	CLASSIFICATION OF MATERIALS	REMARKS
							45	535		
			46.0				46	534	fractured @ 46.0-47.2' 85-90°,J,T,No,No,Ir,VR @ 46.0-49.2'; intersected @ 70°, w/85-90° J,T,No,No,VR @ 46.0-48.5' 10°,B,N,No,No,Ir,R @ 46.5', 47.1', 47.8', 48.5'	
							47	533		
							48			
PQ	5	5.0	5.0	0.5	100	10		532	48.5 DOLOMITE; light brownish gray & gray, mottled; micritic; fresh; very strong; hard; (Bass Islands Group). 10°,B,N,No,No,Ir,R @ 49.2', 49.5', 50.0' 85-90°,J,T,No,No,Ir,VR @ 49.5-50.0'; 50.5-51.0' fractured @ 49.5-51.0'	Core box #3 starts @ 49.2'.
							49	531		
							50	530		
			51.0				51	529	51.0 DOLOMITE; argillaceous; dark brownish gray; micritic; very strong; hard; thick bedded; fossiliferous; pitted w/stylolites & argillaceous partings; (Bass Islands Group).	
							52	528		
							53			
PQ	6	5.0	5.0	4.6	100	92		527	0°,B,N,UK,Fi,Pl,SR @ 53.5', 53.6', 53.8'	
							54	526		
							55	525		
			56.0				56	524	0°,B,N,UK,Fi,Pl,SR @ 56.3', 56.5'	
							57	523	56.9 DOLOMITE; light brownish gray; crystalline; fresh; very strong; hard; w/zones of oolites; (Bass Islands Group). 90°,J,T,partly healed,anhydrite,Pa,Ir,VR @ 57.8-59.3'	Core box #4 starts @ 58.0'.
							58			
PQ	7	5.0	5.0	3.5	100	70		522	20°,B,N,No,No,Pl,R @ 58.4', 58.6', 58.7', 58.9', 59.3'	
							59		40°,J,N,No,No,Pl,R @ 59.3'	
								521	59.3 DOLOMITE; gray; micritic; fresh; very strong; hard;	
							60			

5/20/2008 4:40 PM DTE - Fermi 3 Geotech

BLACK & VEATCH

BORING LOG

BORING NO. CB-C2
SHEET 5 OF 19

CLIENT	PROJECT	PROJECT NO.
Detroit Edison	Fermi 3 COL Application	147483

PROJECT LOCATION	COORDINATES	GROUND ELEVATION (DATUM)	TOTAL DEPTH
Monroe, MI	N 6353.2' E 4517.1'	580.5 ft (NAVD 88)	271.0 (feet)

SURFACE CONDITIONS	COORDINATE SYSTEM	DATE START	DATE FINISHED
Gravel parking area	Plant	07/18/07	08/01/07

LOGGED BY	CHECKED BY	APPROVED BY
TB Bonnie/Ang/Grainger ECA GCO for	Dogbey/Bonnie TB	Meyer EM

SAMPLING: SAMPLE TYPE	SAMPLE NUMBER	SET 6 INCHES	2ND 6 INCHES	3RD 6 INCHES	N VALUE	SAMPLE RECOVERY

CORING: CORE SIZE	RUN NUMBER	RUN LENGTH	RUN RECOVERY	RQD RECOVERY	PERCENT RECOVERY	RQD
PQ	8	5.0	5.0	4.3	100	86
PQ	9	5.0	4.9	4.3	98	86
PQ	10	5.0	4.6	1.6	92	32

DEPTH (FEET)	ELEVATION (FEET)	CLASSIFICATION OF MATERIALS	REMARKS
60	520	medium bedded; w/argillaceous parting & stylolites; (Bass Islands Group).	
61	519	61.0 0°,B,N,UK,Su,Pl,SR @ 61.2', 61.4', 61.6', 61.7', 62.3'	
62	518		
63	517	0°,B,N,UK,Su,Pl,SR @ 62.6', 62.9', 63.0'	
64	516	63.5 DOLOMITE; oolitic; light brownish gray; very fine grained; fresh; very strong; hard; massive; (Bass Islands Group). 0°,B,MW,Cl(black shale),Sp,Pl,R @ 63.5'	
65	515		
66	514	66.0 66.5 DOLOMITE; white & gray, mottled; micritic; fresh; very strong; hard; (Bass Islands Group).	
67	513	contact @ 66.5' convoluted B,MW,Cl,Fi,WA,R, @ 66.8' fractured @ 67.0-67.2'	Core box #5 starts @ 67.3'.
68	512	67.8 DOLOMITE; argillaceous; light gray; fresh; very strong; hard; banded w/stylolites & argillaceous partings; (Bass Islands Group). convoluted bedding @ 68.2-69.3'	
69	511		
70	510		
71	509	71.0 0°,B,N,No,No,Pl,R @ 71.2', 71.4', 71.7'	
72	508	0°,B,N,No,No,Pl,R @ 72.4', 72.5', 73.0'	
73	507	85-90°,J,T,No,No,Ir,VR @ 73.3-74.8' fractured @ 73.3-74.9'	Core trying to block @ 73.0-75.0'. Drill chatter @ 73.0-75.0'.
74	506	73.5 DOLOMITE; crystalline; gray; fresh; extremely strong; hard; massive; (Bass Islands Group). 0°,B,N,No,No,Pl,R @ 74.2', 74.5', 74.6', 74.7', 74.6' 85-90°,J,T,anhydrite,Pa,Ir,VR @ 74.5-76.0' (parallel	
75			

BLACK & VEATCH

BORING LOG

BORING NO. CB-C2
SHEET 6 OF 19

CLIENT	PROJECT	PROJECT NO.
Detroit Edison	Fermi 3 COL Application	147483

PROJECT LOCATION	COORDINATES	GROUND ELEVATION (DATUM)	TOTAL DEPTH
Monroe, MI	N 6353.2' E 4517.1'	580.5 ft (NAVD 88)	271.0 (feet)

SURFACE CONDITIONS	COORDINATE SYSTEM	DATE START	DATE FINISHED
Gravel parking area	Plant	07/18/07	08/01/07

LOGGED BY	CHECKED BY	APPROVED BY
TB ECM GEOfer Bonnie/Ang/Grainger	EMF TB Dogbey/Bonnie	EM Meyer

SAMPLING: SAMPLE TYPE	SAMPLE NUMBER	SET 6 INCHES	2ND 6 INCHES	3RD 6 INCHES	N VALUE	SAMPLE RECOVERY	CORING: CORE SIZE	RUN NUMBER	RUN LENGTH	RUN RECOVERY	RQD RECOVERY	PERCENT RECOVERY	RQD	DEPTH (FEET)	SAMPLE TYPE	ELEVATION (FEET)	GRAPHIC LOG	CLASSIFICATION OF MATERIALS	REMARKS
														75		505		set) pitted @ 74.9-75.4'	
										76.0				76					
																504		solutioned fractures @ 76.4'	
																		76.5 BRECCIA; healed; gray, micritic, dolomite clasts (1->3"); in a pale brown micritic dolomite matrix; some black shale runners fill cracks & w/anhydrite filling fractures & pits/vugs; (Bass Islands Group).	
														77		503		convoluted contact @ 76.5'.	Core box #6 starts @ 77.6'.
							PQ	11	5.0	5.0	4.2	100	84	78		502		solutioned fractures @ 77.0', 77.6'	
														79		501			
														80		500			
										81.0				81		499			
														82		498		pitted @ 82.0-84.6'	
														83		497		weathered convoluted fractures @ 83.0'	
							PQ	12	5.0	4.9	3.3	98	66	84		496		weathered convoluted fractures @ 84.0', 84.4' weathered, near vertical fracture @ 84.4-86.6'	
														85		495			
										86				86		494			Core box #7 starts @ 86.0'.
																		weathered convoluted fractures @ 86.4'	
														87		493		86.6 DOLOMITE; light gray; crystalline; fresh; very strong; hard; banded w/stylolites; (Bass Islands Group). 0-5°,B,N,UK,Su,WA,R @ 86.8', 87.1', 87.6' 80-90°,J,T,No,No,Ir,VR @ 87.2-89.1', 87.4-88.9' B,W (solutioned) @ 87.8', 88.2'	
														88		492		¼" clay filled solution feature along bedding; clay (CL); gray; very soft; moist; @ 88.3' 70°,J,N,No,No,Ir,R @ 88.5', 89.5'	
							PQ	13	5.0	4.8	1.0	96	20	89		491			
														90					

BLACK & VEATCH

BORING LOG

BORING NO. CB-C2

CLIENT	PROJECT	PROJECT NO.
Detroit Edison	Fermi 3 COL Application	147483

PROJECT LOCATION	COORDINATES	GROUND ELEVATION (DATUM)	TOTAL DEPTH
Monroe, MI	N 6353.2' E 4517.1'	580.5 ft (NAVD 88)	271.0 (feet)

SURFACE CONDITIONS	COORDINATE SYSTEM	DATE START	DATE FINISHED
Gravel parking area	Plant	07/18/07	08/01/07

LOGGED BY	CHECKED BY	APPROVED BY
TB ECA GCC for Bonnie/Ang/Grainger	TB Dogbey/Bonnie	Meyer

SAMPLING: SAMPLE TYPE	SAMPLE NUMBER	SET 6 INCHES	2ND 6 INCHES	3RD 6 INCHES	N VALUE	SAMPLE RECOVERY

CORING: CORE SIZE	RUN NUMBER	RUN LENGTH	RUN RECOVERY	RQD RECOVERY	PERCENT RECOVERY	RQD
PQ	14	5.0	5.0	2.4	100	48
PQ	15	5.0	4.7	3.2	94	64
PQ	16	5.0	5.0	3.2	100	64

DEPTH (FEET)	ELEVATION (FEET)	CLASSIFICATION OF MATERIALS	REMARKS
90	490	0-5°,B,N,UK,Su,WA,R @ 90.0', 90.6'	
91		91.0	
	489	SHALE; black; slightly weathered; low hardness; no reaction w/HCl; (Bass Islands Group).	
		91.3	
92		DOLOMITE; dark gray; micritic; fresh; very strong; hard; (Bass Islands Group).	
	488	0°,B,N,UK,Sp,Ir,R @ 91.6', 92.1', 92.3'	
		92.5	
93		DOLOMITE; dark grayish brown; crystalline; fresh; very strong; hard; banded w/stylolites; (Bass Islands Group).	
	487	20°,J,T,No,No,Pl,SR @ 92.8', 92.9'	
94		0°,B,N,UK,Sp,Ir,R @ 93.3', 94.1'	
	486	60°,J,MW (solutioned) @ 93.3'	
		85-90°,J,N,anhydrite,Pa,Ir,R @ 93.5-94.2'	
95		20°,J,T,No,No,Pl,SR @ 94.9'	
	485		
96		60°,J,N,No,No,Pl,SR @ 95.9'	Core box #8 starts @ 95.8'. Water level @ 18.0' prior to drilling on 07/30/07.
	484	85-90°,J,T,No,No,Ir,R @ 96.3-97.5'	
97		0°,B,N,UK,Su,Ir,VR @ 97.2', 98.2'	
	483	97.6	
		SHALE; dark grayish brown; highly weathered; (Clay); medium plasticity, medium toughness, no dilatancy; hard; moist; no reaction w/HCl; (Bass Islands Group).	
98		97.7	
	482	DOLOMITE; dark grayish brown; crystalline; fresh; very strong; hard; banded; w/stylolites; (Bass Islands Group).	
99		20°,J,N (solutioned) @ 97.7', 98.2'	
	481	healed brecciated zones @ 98.2-98.7', 99.7-100.5'	
100		0°,B,N,UK,Su,Ir,VR @ 100.5'	
	480	¼" Clay (CL); medium plasticity, medium toughness, no dilatancy; soft; moist; no reaction w/HCl @ 100.7'	
101		85-90°,J,T,No,No,Ir,VR @ 100.8-101.4', 101.2-102.3'	
	479	0°,B,N,UK,Sp,Pl,R @ 101.5', 101.6', 101.7', 102.0'	
102		fractured @ 102.3-102.5'	
	478	102.4	
103		DOLOMITE; argillaceous; very dark gray; fresh; very strong; hard; w/thin argillaceous partings; (Bass Islands Group).	
	477	0°,B,N,anhydrite,Fi @ 102.8'	
104		0°,B,N,UK,Sp,Pl,R @ 103.6', 104.3'	
	476	fractured @ 103.8-103.9'	
105		fractured @ 104.6'	Core box #9 starts @ 104.8'.

BLACK & VEATCH

BORING LOG

BORING NO. CB-C2

CLIENT	PROJECT	PROJECT NO.
Detroit Edison	Fermi 3 COL Application	147483

PROJECT LOCATION	COORDINATES		GROUND ELEVATION (DATUM)	TOTAL DEPTH
Monroe, MI	N 6353.2'	E 4517.1'	580.5 ft (NAVD 88)	271.0 (feet)

SURFACE CONDITIONS	COORDINATE SYSTEM	DATE START	DATE FINISHED
Gravel parking area	Plant	07/18/07	08/01/07

LOGGED BY	CHECKED BY	APPROVED BY
TB ECA Geofor Bonnie/Ang/Grainger	EM for TB Dogbey/Bonnie	EM Meyer

SAMPLING: SAMPLE TYPE | SAMPLE NUMBER | SET 6 INCHES | 2ND 6 INCHES | 3RD 6 INCHES | N VALUE | SAMPLE RECOVERY

CORING: CORE SIZE | RUN NUMBER | RUN LENGTH | RUN RECOVERY | RQD RECOVERY | PERCENT RECOVERY | RQD

SAMPLE TYPE	SAMPLE NUMBER	SET 6 INCHES	2ND 6 INCHES	3RD 6 INCHES	N VALUE	SAMPLE RECOVERY	DEPTH (FEET)	ELEVATION (FEET)	CLASSIFICATION OF MATERIALS	REMARKS
							105	475	0°,B,N,UK,Sp,Pl,R @ 105.2'	
			106.0				106	474	fractured @ 106.0-106.5' 90°,J,T,No,No,Ir,R @ 106.0-107.3' 106.4 DOLOMITE; gray; crystalline; fresh; very strong; hard; medium bedded w/stylolites; (Bass Islands Group). 0°,B,N,No,No,Pl,SR @ 106.4', 106.5', 106.7', 107.1', 107.3', 107.35', 108.2' fractured @ 106.7-107.1', 107.9-108.2' 90°,J,T,No,No,Ir,R @ 107.4-108.9' 80°,J,T,No,No,Ir,R @ 108.2-108.9'	
PQ	17	5.0	5.0	1.7	100	34	107	473		
							108	472		
							109	471	0°,B,N,No,No,Pl,SR @ 109.1', 109.2'	
							110	470	80°,J,T,No,No,Ir,R @ 110.0-111.0', 110.0-111.1' 90°,J,T,No,No,Ir,R 110.0-112.0' 0°,B,N,No,No,Pl,SR @ 110.0', 110.2', 110.6' fractured @ 110.0-110.2'	
			111.0				111	469	0°,B,N,UK,Sp,Ir,VR @ 111.1', 111.5', 111.8'	
							112	468	0°,B,MW (solutioned) @ 111.7' 0°,B,MW (solutioned) @ 112.1'	
PQ	18	5.0	5.0	3.0	100	60	113	467		
							114	466	0°,B,MW (solutioned) @ 113.7'	Core box #10 starts @ 114.0'.
							115	465	20°,J,MW, ¼" shale parting; gray; highly weathered; comparable to medium plasticity, medium toughness, no dilatancy; hard soil fines @ 115.3-115.4' 80°,J,T,Ca,H,Ir,R @ 115.3-117.1' 115.7 DOLOMITE; argillaceous; very dark grayish brown; fresh; very strong; hard; massive; pitted; w/stylolites; (Bass Islands Group). 90°,J,T,No,No,Ir,VR @ 116.0-117.3'	
			116.0				116	464		
							117	463		
PQ	19	5.0	4.8	3.5	96	70	118	462		
							119	461	118.7 CLAY (CL); gray; medium plasticity, medium toughness, no dilatancy; hard; (Bass Islands Group). 0-10°,B,MW (solutioned) @ 118.7' 119.2 DOLOMITE; argillaceous; very dark grayish brown;	Soft drilling @ 119.0'.
							120			

5/20/2008 4:40 PM DTE - Fermi 3 Geotech

BLACK & VEATCH

BORING LOG

BORING NO. CB-C2

CLIENT	PROJECT	PROJECT NO.
Detroit Edison	Fermi 3 COL Application	147483

PROJECT LOCATION	COORDINATES	GROUND ELEVATION (DATUM)	TOTAL DEPTH
Monroe, MI	N 6353.2' E 4517.1'	580.5 ft (NAVD 88)	271.0 (feet)

SURFACE CONDITIONS	COORDINATE SYSTEM	DATE START	DATE FINISHED
Gravel parking area	Plant	07/18/07	08/01/07

LOGGED BY	CHECKED BY	APPROVED BY
TB ECA GEO for Bonnie/Ang/Grainger	Dogbey/Bonnie TB	Meyer

SAMPLING							CORING							DEPTH (FEET)	SAMPLE TYPE	ELEVATION (FEET)	GRAPHIC LOG	CLASSIFICATION OF MATERIALS	REMARKS
SAMPLE TYPE	SAMPLE NUMBER	SET 6 INCHES	2ND 6 INCHES	3RD 6 INCHES	N VALUE	SAMPLE RECOVERY	CORE SIZE	RUN NUMBER	RUN LENGTH	RUN RECOVERY	RQD RECOVERY	PERCENT RECOVERY	RQD						
														120		460		fresh; very strong; hard; massive; pitted; w/stylolites; (Bass Islands Group). 75°,J,N,No,No,Ir,R @ 119.2' 10°,B,N,anhydrite,Fi @ 119.2' 10°,B,N,No,No,Ir,R @ 119.6', 119.7'	
										121.0				121		459		0-10°,B,MW (solutioned) @ 120.3' healed brecciated @ 120.5-122.1' 75°,J,N,No,No,Ir,R @ 121.4-122.1'	
														122		458			
														123		457		50°,J,N,No,No,Ir @ 122.6' (slightly weathered) 0°,B,N,No,No,Pl,SR @ 123.0', 123.5', 123.6', 123.8', 124.0', 124.1', 124.3'	Core box #11 starts @ 123.0'.
PQ	20	5.0	3.8	1.1	76	22								124		456		clay band (CL); gray; medium plasticity, medium toughness, no dilatancy; hard; @ 123.3-123.4' 123.4 DOLOMITE; micritic; (Salina Group - Unit F).	Core loss @ 124.5-126.0'.
														125		455		125.5 DOLOMITE; argillaceous; gray; slightly weathered to fresh; strong to very strong; hard; w/band of grayish brown; pitted; very fine grained dolomite; w/partings & nodules of anhydrite; (Salina Group - Unit F).	
										126.0				126		454		Clay (CL); medium plasticity, medium toughness, no dilatancy; soft; @ 126.0-126.2'	
														127		453		fractured @ 126.2-127.1' 0°,B,N,No,No,Ir,R @ 126.4', 126.6', 127.0', 127.7'	
														128		452		70°,J,N,No,No,Ir,R @ 127.4-128.4' 0°,B,N,No,No,Ir,R @ 128.1', 128.2', 128.4'	
PQ	21	5.0	5.0	0.5	100	10												fractured @ 128.2-128.7'	
														129		451		70°,J,N,No,No,Ir,R @ 128.7-129.5' 0°,B,N,No,No,Ir,R @ 128.8', 129.3', 129.6'	
														130		450		fractured @ 130.2-131.0' 0°,B,N,No,No,Ir,R @ 130.4', 130.5'	
										131.0				131		449			Core loss @ 131.1-132.3'.
														132		448		90°,J,N,No,No,Ir,R @ 132.2-132.9' 0°,B,N,No,No,Ir,R @ 132.2', 132.7',	
														133		447		0°,B,N,Ir,R @ 132.9', 133.1', 134.4'	
PQ	22	5.0	4.2	1.9	84	38								134		446		fracture zone @ 134.1-134.3'; fossiliferous; grayish brown limestone 134.4	Core box #12 starts @ 134.1'.
														135					

BLACK & VEATCH

BORING LOG

BORING NO. CB-C2
SHEET 10 OF 19

CLIENT	PROJECT	PROJECT NO.
Detroit Edison	Fermi 3 COL Application	147483

PROJECT LOCATION	COORDINATES	GROUND ELEVATION (DATUM)	TOTAL DEPTH
Monroe, MI	N 6353.2' E 4517.1'	580.5 ft (NAVD 88)	271.0 (feet)

SURFACE CONDITIONS	COORDINATE SYSTEM	DATE START	DATE FINISHED
Gravel parking area	Plant	07/18/07	08/01/07

LOGGED BY	CHECKED BY	APPROVED BY
TB Bonnie/Ang/Grainger	Dogbey/Bonnie	Meyer

SAMPLING: SAMPLE TYPE	SAMPLE NUMBER	SET 6 INCHES	2ND 6 INCHES	3RD 6 INCHES	N VALUE	SAMPLE RECOVERY

CORING: CORE SIZE	RUN NUMBER	RUN LENGTH	RUN RECOVERY	RQD RECOVERY	PERCENT RECOVERY	RQD
PQ	23	5.0	4.4	0.9	88	18
PQ	24	5.0	4.8	0.5	96	10
PQ	25	5.0	2.5	0.0	50	0

DEPTH (FEET)	SAMPLE TYPE	ELEVATION (FEET)	GRAPHIC LOG	CLASSIFICATION OF MATERIALS	REMARKS
135		445		DOLOMITE; dark gray; micritic (Salina Group - Unit F)	
				135.0	
				CLAYSTONE; dolomitic; gray; slightly weathered; strong to weak; moderately hard; (Salina Group - Unit F).	
136				0°,B,N,No,No,Ir,R @ 134.8', 135.0', 135.1'	
136.0		444		136.4	
				LIMESTONE; argillaceous; dark gray; very fine grained; moderately hard to weak; interbedded w/gray dolomitic claystone; bedding contorted; (Salina Group - Unit F).	
137		443		0°,B,N,No,No,Ir,R @ 137.1', 137.5', 138.2'	
138		442			
				138.8	
139		441		CLAYSTONE; dolomitic; gray; slightly weathered; strong; moderately hard; thick bedded; (Salina Group - Unit F).	
				fractured @ 138.9-139.9', 140.2-140.4'	
140		440		90°,J,N,No,No,Ir,SR @ 138.9-139.9'	
141		439		10°,B,N,No,No,Pl,R @ 141.3', 141.7'	
141.0				141.9	
142		438		LIMESTONE; argillaceous; gray; fine grained to very fine grained; moderately weathered; weak to moderately strong; moderately hard; pitted; (Salina Group - Unit F).	
143		437		fractured/gravelly @ 143.5-144.7'	
144		436		highly weathered @ 144.5-144.7'	Core box #13 starts @ 144.2'.
145		435		144.9	
				DOLOMITE; gray; micritic; fresh; strong; hard; (Salina Group - Unit F).	
146		434		90°,J,T,No,No,Pl,SR @ 144.9-147.0'	
146.0					Sampler frequently jammed @ 146.0-148.0'.
147		433		147.0	
				CLAYSTONE; dolomitic; gray; slightly to moderately weathered; weak; moderately hard; w/softer gravelly zones & thin clayey dolomite layers; (Salina Group - Unit F).	
148		432			
149		431			
150					

BLACK & VEATCH

BORING LOG

BORING NO. CB-C2

SHEET 11 OF 19

CLIENT	PROJECT	PROJECT NO.
Detroit Edison	Fermi 3 COL Application	147483

PROJECT LOCATION	COORDINATES	GROUND ELEVATION (DATUM)	TOTAL DEPTH
Monroe, MI	N 6353.2' E 4517.1'	580.5 ft (NAVD 88)	271.0 (feet)

SURFACE CONDITIONS	COORDINATE SYSTEM	DATE START	DATE FINISHED
Gravel parking area	Plant	07/18/07	08/01/07

LOGGED BY	CHECKED BY	APPROVED BY
TB ELA GCO for Bonnie/Ang/Grainger	EMF for TB Dogbey/Bonnie	EM Meyer

SAMPLING							CORING									
SAMPLE TYPE	SAMPLE NUMBER	SET 6 INCHES	2ND 6 INCHES	3RD 6 INCHES	N VALUE	SAMPLE RECOVERY	CORE SIZE	RUN NUMBER	RUN LENGTH	RUN RECOVERY	RQD RECOVERY	PERCENT RECOVERY	RQD	DEPTH (FEET)	SAMPLE TYPE	ELEVATION (FEET)	GRAPHIC LOG	CLASSIFICATION OF MATERIALS	REMARKS
														150		430			
														151		429		151.0 CLAYSTONE; calcareous; gray; slightly to moderately weathered; moderately strong; low to moderately hard; w/thin limestone & dolomite bands; (Salina Group - Unit F). dolomite band; clayey @ 152.0-152.2'	
														152		428			
														153		427			
							PQ	26	5.0	4.0	1.6	80	32	154		426			Discrete sample box 13A collected @ 153.5-154.4'.
														155		425		0°,B,soft;fractured @ 154.7-154.9' 0°,B,N,No,No,Ir,R @ 155.2'	
														156		424		156.0 DOLOMITE; (Salina Group - Unit F).	
														157		423		157.0 CLAYSTONE; calcareous; gray; slightly to moderately weathered; moderately strong; low to moderately hard; w/thin limestone & dolomite bands; (Salina Group - Unit F).	
														158		422			
							PQ	27	5.0	3.0	0.0	60	0	159		421		dolomite band @ 158.5-158.7' dolomite band @ 159.1-159.4'	Core box #14 starts @ 158.5'.
														160		420			
														161		419		161.0 fractured @ 161.4-161.7'	Water level @ 17.3' prior to drilling on 07/31/07.
														162		418		0-5°,B,W,No,No @ 162.3' fractured @ 162.7-162.9'	
														163		417			
							PQ	28	5.0	3.0	1.2	60	24	164		416		dolomite band; gray; micritic @ 163.4-163.6'	
														165					

5/20/2008 4:40 PM DTE - Fermi 3 Geotech

BLACK & VEATCH

BORING LOG

BORING NO. CB-C2

CLIENT	PROJECT	PROJECT NO.
Detroit Edison	Fermi 3 COL Application	147483

PROJECT LOCATION	COORDINATES	GROUND ELEVATION (DATUM)	TOTAL DEPTH
Monroe, MI	N 6353.2' E 4517.1'	580.5 ft (NAVD 88)	271.0 (feet)

SURFACE CONDITIONS	COORDINATE SYSTEM	DATE START	DATE FINISHED
Gravel parking area	Plant	07/18/07	08/01/07

LOGGED BY	CHECKED BY	APPROVED BY
Bonnie/Ang/Grainger	Dogbey/Bonnie	Meyer

SAMPLING							CORING									
SAMPLE TYPE	SAMPLE NUMBER	SET 6 INCHES	2ND 6 INCHES	3RD 6 INCHES	N VALUE	SAMPLE RECOVERY	CORE SIZE	RUN NUMBER	RUN LENGTH	RUN RECOVERY	RQD RECOVERY	PERCENT RECOVERY	RQD	DEPTH (FEET)	SAMPLE TYPE	ELEVATION (FEET)	GRAPHIC LOG	CLASSIFICATION OF MATERIALS	REMARKS
														165		415		165.0 CLAYSTONE; gray; slightly to moderately weathered; weak to moderately strong; low hardness; w/thin partings to bands of gray, fine grained limestone & bands of gray, micritic dolomite; (Salina Group - Unit F).	
			166.0				PQ	29	3.3	3.2	1.2	97	36	166		414			
														167		413			
														168		412			
														169				dolomite partings to bands @ 169.0-169.5'	Material swelling in core barrel shoe.
			169.3				PQ	30	1.7	1.6	0.8	94	47	170		411		169.3 BRECCIA; gray; poorly indurated claystone matrix; w/ dolomite clasts; micritic; gray; strong; ranging from sand size to >3"; (Salina Group - Unit F).	
																410		dolomite partings to bands @ 170.5-170.7'	
			171.0				PQ	31	3.0	2.5	0.4	83	13	171		409			Core box #15 starts @ 171.0'.
														172		408		172.1 DOLOMITE; micritic; fractured (high angled joints & bedding planes); (Salina Group - Unit F).	
														173		407			
			174.0				PQ	32	2.0	0.8	0.0	40	0	174		406		174.0 BRECCIA; gray; poorly indurated claystone matrix; w/ dolomite clasts; micritic; gray; strong; ranging from sand size to >3"; (Salina Group - Unit F).	Prior to run 33, pulled back 10'; caved 0.5 to 1.0'. Washed back down to 176.0'.
														175		405		175.2 DOLOMITE; micritic; fractured; (Salina Group - Unit F).	
			176.0				PQ	33	4.0	2.1	0.0	52.5	0	176		404			
														177		403		177.0 BRECCIA; gray; poorly indurated claystone matrix; w/ dolomite clasts; micritic; gray; strong; ranging from sand size to >3"; (Salina Group - Unit F).	
														178		402			
														179		401		179.0 DOLOMITE; micritic; fractured; (Salina Group - Unit F).	
														180					

BLACK & VEATCH

BORING LOG

BORING NO. CB-C2

CLIENT	PROJECT	PROJECT NO.
Detroit Edison	Fermi 3 COL Application	147483

PROJECT LOCATION	COORDINATES	GROUND ELEVATION (DATUM)	TOTAL DEPTH
Monroe, MI	N 6353.2' E 4517.1'	580.5 ft (NAVD 88)	271.0 (feet)

SURFACE CONDITIONS	COORDINATE SYSTEM	DATE START	DATE FINISHED
Gravel parking area	Plant	07/18/07	08/01/07

LOGGED BY	CHECKED BY	APPROVED BY
TB ECA GLO for Bonnie/Ang/Grainger	TB Dogbey/Bonnie	Meyer

SAMPLING							CORING										
SAMPLE TYPE	SAMPLE NUMBER	SET 6 INCHES	2ND 6 INCHES	3RD 6 INCHES	N VALUE	SAMPLE RECOVERY	CORE SIZE	RUN NUMBER	RUN LENGTH	RUN RECOVERY	RQD RECOVERY	PERCENT RECOVERY	RQD	DEPTH (FEET)	SAMPLE TYPE	ELEVATION (FEET)	GRAPHIC LOG	CLASSIFICATION OF MATERIALS	REMARKS
										180.0				180		400		180.0 SAND; fine to coarse grained; (Salina Group - Unit F). 180.6	Core barrel jammed @ 180.0'. Drill chatter @ 180-181'.
							PQ	34	1.0	1.0	0.0	100	0	181		399		CLAYSTONE; gray; completely weathered; w/micritic dolomite fragments & sand; properties comparable to: gravelly lean clay - about 70% medium plasticity, medium toughness, no dilatancy soil fines; about 20% fine to coarse, angular, hard gravel w/max. size 2"; about 10% fine to coarse, angular, hard sand; (Salina Group - Unit F). 181.0	
										181.0				182		398			
														183		397		BRECCIA; gray; poorly indurated claystone matrix; w/ dolomite clasts; micritic; gray; strong; ranging from sand size to >3"; (Salina Group - Unit F).	
							PQ	35	5.0	2.7	0.0	54	0	184		396		micritic dolomite, fractured @ 184.1-184.3'	
														185		395			Core box #16 starts @ 185.0'.
										186.0				186		394			Prior to run 36, pulled back 10'. Caved about 1.0'; washed back down to 186.0'.
														187		393			
														188		392		30°,J,Pl,SR @ 187.9'	
							PQ	36	5.0	3.8	0.0	76	0	189		391			
														190		390		189.6 BRECCIA; light brownish gray; partially healed calcareous clay & calcite matrix; w/angular dolomite clasts; max. size 3"; (Salina Group - Unit F).	
										191.0				191		389		60°,J,No,No,Pl,SR @ 191.1'	
														192		388			
														193		387		grades w/clasts maximum size 1" @ 192.6'	
							PQ	37	5.0	4.3	0.9	86	18	194		386			
														195					

BLACK & VEATCH

BORING LOG

BORING NO. CB-C2

CLIENT	PROJECT	PROJECT NO.
Detroit Edison	Fermi 3 COL Application	147483

PROJECT LOCATION	COORDINATES	GROUND ELEVATION (DATUM)	TOTAL DEPTH
Monroe, MI	N 6353.2' E 4517.1'	580.5 ft (NAVD 88)	271.0 (feet)

SURFACE CONDITIONS	COORDINATE SYSTEM	DATE START	DATE FINISHED
Gravel parking area	Plant	07/18/07	08/01/07

LOGGED BY	CHECKED BY	APPROVED BY
TB ELA GCO for Bonnie/Ang/Grainger	EM for TB Dogbey/Bonnie	EM Meyer

SAMPLE TYPE	SAMPLE NUMBER	SET 6 INCHES	2ND 6 INCHES	3RD 6 INCHES	N VALUE	SAMPLE RECOVERY	DEPTH (FEET)	ELEVATION (FEET)	CLASSIFICATION OF MATERIALS	REMARKS
							195	385	195.2 DOLOMITE; gray; micritic; fresh; very strong; hard; thin bedded; (Salina Group - Unit F). 0°,B,N,No,No,Pl,R @ 195.2', 195.3', 195.4' 90°,J,No,No,Pl,R @ 195.2-196'	
			196.0				196	384	196.0 DOLOMITE; gray; micritic; slightly weathered; strong; thin bedded; interbedded w/claystone; (Salina Group - Unit F).	Core loss @ 196.0-198.0'.
							197	383		Prior to run 38, pulled back 10'. Some cave-in. Washed back down to 196.0'.
PQ	38	5.0	2.2	0.0	44	0	198	382	soft; weathered @ 198.0-199.0'	
							199	381		
							200	380	200.0 DOLOMITE; light gray; micritic; slightly weathered; strong; hard; fossiliferous; (Salina Group - Unit F). 20°,B,N,Pl,R @ 200.4', 200.5'	Core box #17 starts @ 200.0'.
			201.0				201	379	201.0 LIMESTONE; dark grayish brown; pitted & vuggy; crystalline; very fine grained; slightly weathered; strong; hard; (Salina Group - Unit F).	
							202	378		
PQ	39	5.0	3.6	0.9	72	18	203	377	60°,J,N,No,No,Ir,VR @ 203.1' 90°,J,T,No,No,Ir @ 203.4-204.0' dolomite; micritic; light gray; fossiliferous; fractured @ 203.7-204.1'	
							204	376	204.1 BRECCIA; light gray; claystone matrix; w/light gray dolomite clasts; hard; cemented; (Salina Group - Unit F).	
							205	375	204.9 LIMESTONE; dark grayish brown; pitted & vuggy; crystalline; very fine grained; slightly weathered; strong; hard; (Salina Group - Unit F). 0°,B,Ir (solutioned) @ 205.3', 205.8'	
			206.0				206	374		
							207	373	207.6 BRECCIA; calcareous clay matrix; light gray; cemented; w/light brownish gray; micritic dolomite clasts; maximum size 2"; angular; (Salina Group - Unit F).	
PQ	40	5.0	3.8	1.9	76	38	208	372		
							209	371	fractured @ 209.4-209.8', 210.1-210.2'	
							210			

5/20/2008 4:40 PM DTE - Fermi 3 Geotech

BLACK & VEATCH

BORING LOG

BORING NO. CB-C2

CLIENT	PROJECT	PROJECT NO.
Detroit Edison	Fermi 3 COL Application	147483

PROJECT LOCATION	COORDINATES	GROUND ELEVATION (DATUM)	TOTAL DEPTH
Monroe, MI	N 6353.2' E 4517.1'	580.5 ft (NAVD 88)	271.0 (feet)

SURFACE CONDITIONS	COORDINATE SYSTEM	DATE START	DATE FINISHED
Gravel parking area	Plant	07/18/07	08/01/07

LOGGED BY	CHECKED BY	APPROVED BY
TB EJA GCO for Bonnie/Ang/Grainger	EJA TB Dogbey/Bonnie	EM Meyer

SAMPLING							CORING							DEPTH (FEET)	SAMPLE TYPE	ELEVATION (FEET)	GRAPHIC LOG	CLASSIFICATION OF MATERIALS	REMARKS
SAMPLE TYPE	SAMPLE NUMBER	SET 6 INCHES	2ND 6 INCHES	3RD 6 INCHES	N VALUE	SAMPLE RECOVERY	CORE SIZE	RUN NUMBER	RUN LENGTH	RUN RECOVERY	RQD RECOVERY	PERCENT RECOVERY	RQD						
														210		370		fractured @ 210.1-210.2'	
										211.0				211					Core box #18 starts @ 211.0'.
																369		211.5 DOLOMITE; light gray; micritic; slightly weathered; strong; hard; closely spaced horizontal & vertical fractures filled w/gray limestone; (Salina Group - Unit F).	
														212		368		212.8 DOLOMITE; brecciated, healed; (Salina Group - Unit F).	
														213		367		213.5 LIMESTONE; vuggy; dark grayish brown; very fine grained; fresh to slightly weathered; strong; hard; w/vugs filled w/claystone; light brownish gray; highly weathered (some claystone washed away); (Salina Group - Unit F).	
PQ	41	5.0	5.0	3.8	100	76								214		366		214.2 DOLOMITE; crystalline; light brownish gray; micritic; slightly weathered; strong; hard; w/limestone interlayed in upper 1.0'; (Salina Group - Unit F). gradational contact over 1.0' @ 214.2'	
														215		365			
										216.0				216		364		0°,B,N,UK,Sp,Pl,SR @ 214.4', 214.5', 214.9', 215.4', 216.0', 216.1', 216.6', 216.9'	
																		85-90°,J,T,Ca,H,Fi,Ir @ 216.0-217.0'	
														217		363		60°,J,N,Pl,SR @ 217.2-217.6', 218.2'	
																		0°,B,N,UK,Sp,Pl,SR @ 217.5', 217.8', 218.0', 218.3'	
														218		362		60°,J,Pl,SR @ 217.9-218.1'	
PQ	42	5.0	3.1	0.4	62	8												fractured zone (core loss) @ 218.3-220.8'	
														219		361			
														220		360			
										221.0				221		359		221.5 LIMESTONE; vuggy; dark grayish brown; very fine grained; fresh; strong; hard; (Salina Group - Unit F).	Core box #19 starts @ 221.0'. Water level @ 23.4' on 08/01/07.
														222		358		222.3 DOLOMITE; light brownish gray; micritic; (Salina Group - Unit F). fractured zones @ 222.7-223.1',223.4-223.9'	
														223		357		222.8 LIMESTONE; vuggy; dark grayish brown; very fine grained; fresh; strong; hard; (Salina Group - Unit F).	
PQ	43	5.0	4.5	0.9	90	18								224		356		60°,J,N,No,No,Ir,VR @ 223.9', 225.1'	
														225				fractured zones @ 224.7-225.1'	

BLACK & VEATCH

BORING LOG

BORING NO. CB-C2

CLIENT	PROJECT	PROJECT NO.
Detroit Edison	Fermi 3 COL Application	147483

PROJECT LOCATION	COORDINATES	GROUND ELEVATION (DATUM)	TOTAL DEPTH
Monroe, MI	N 6353.2' E 4517.1'	580.5 ft (NAVD 88)	271.0 (feet)

SURFACE CONDITIONS	COORDINATE SYSTEM	DATE START	DATE FINISHED
Gravel parking area	Plant	07/18/07	08/01/07

LOGGED BY	CHECKED BY	APPROVED BY
TB Bonnie/Ang/Grainger	Dogbey/Bonnie	Meyer

SAMPLING							CORING									
SAMPLE TYPE	SAMPLE NUMBER	SET 6 INCHES	2ND 6 INCHES	3RD 6 INCHES	N VALUE	SAMPLE RECOVERY	CORE SIZE	RUN NUMBER	RUN LENGTH	RUN RECOVERY	RQD RECOVERY	PERCENT RECOVERY	RQD	DEPTH (FEET)	SAMPLE TYPE	ELEVATION (FEET)	GRAPHIC LOG	CLASSIFICATION OF MATERIALS	REMARKS
														225		355		225.3	
																		DOLOMITE; light brownish gray; micritic; (Salina Group - Unit F).	
			226.0											226		354		grading gray; micritic; hard @ 226.3'	
														227		353		226.9	
																		LIMESTONE; vuggy; dark grayish brown; very fine grained; fresh; strong; hard; (Salina Group - Unit F). 80°,J,N,No,No,Ir,VR @ 227.1-227.8', 227.7-228.1'	
														228		352		228.1	
PQ	44	5.0	4.5	0.8	90	16												DOLOMITE; brownish gray; micritic; slightly weathered; strong; hard; w/calcite healed fractures; (Salina Group - Unit F). healed fracture @ 228.1-228.7' 0-5°,B,W (solutioned), R @ 228.3', 228.7', 228.9' 80°,J,Ca,H,Sp,Ir @ 228.4-228.8', 229.4-229.8'	
														229		351			
														230		350		0-5°,B,W (solutioned), R @ 230.0', 230.1', 230.6' healed fracture @ 230.3-230.6'	
														231		349			Core box #20 starts @ 231.0'.
			231.0															231.5	
														232		348		BRECCIA; poorly cemented; dark grayish brown; crystalline limestone matrix; w/angular dolomite clasts; light brownish gray; micritic; (Salina Group - Unit F).	
														233		347			Core loss; no drill chatter @ 233.0'.
PQ	45	5.0	1.7	0.0	34	0								234		346			
														235		345		235.0	
																		DOLOMITE; dark gray; micritic; slightly weathered; strong; hard; w/soft layers; (Salina Group - Unit F). 80°,J,T,Ca,Fi,Pl,R @ 235.3' strike intersecting @ 70° w/80°,J,T,Ca, Fi,Pl,R @ 235.3'	
			236.0											236		344			
														237		343			
														238		342			
PQ	46	5.0	1.7	0.0	34	0								239		341			
														240					

BLACK & VEATCH

BORING LOG

BORING NO. CB-C2

CLIENT	PROJECT	PROJECT NO.
Detroit Edison	Fermi 3 COL Application	147483

PROJECT LOCATION	COORDINATES	GROUND ELEVATION (DATUM)	TOTAL DEPTH
Monroe, MI	N 6353.2' E 4517.1'	580.5 ft (NAVD 88)	271.0 (feet)

SURFACE CONDITIONS	COORDINATE SYSTEM	DATE START	DATE FINISHED
Gravel parking area	Plant	07/18/07	08/01/07

LOGGED BY	CHECKED BY	APPROVED BY
Bonnie/Ang/Grainger	Dogbey/Bonnie	Meyer

SAMPLING							CORING										
SAMPLE TYPE	SAMPLE NUMBER	SET 6 INCHES	2ND 6 INCHES	3RD 6 INCHES	N VALUE	SAMPLE RECOVERY	CORE SIZE	RUN NUMBER	RUN LENGTH	RUN RECOVERY	RQD RECOVERY	PERCENT RECOVERY	RQD	DEPTH (FEET)	SAMPLE TYPE	ELEVATION (FEET)	GRAPHIC LOG
														240		340	
														241		339	
			241.0														
PQ	47	2.5	0.5	0.0	20	0								242		338	
														243		337	
			243.5														
PQ	48	2.5	1.6	0.0	64	0								244		336	
														245		335	
			246.0														
														246		334	
														247		333	
PQ	49	5.0	4.6	3.3	92	66								248		332	
														249		331	
														250		330	
			251.0														
														251		329	
														252		328	
														253		327	
PQ	50	5.0	5.0	3.8	100	76											
														254		326	
														255			

CLASSIFICATION OF MATERIALS	REMARKS
90°,J,Pl,R @ 240.0-240.8'	
240.8	
CLAY; dolomitic (Salina Group - Unit F).	Barrel dropped 0.2' at end of run 46. Possible soft zone - barrel washed down to 242.0' from 241.9'.
243.0	
DOLOMITE; dark gray; micritic; strong; hard; w/very soft white clay coating rock; (Salina Group - Unit F). 90°,J,Pl,SR @ 243.0-243.5'	
243.5	
BRECCIA; poorly indurated claystone matrix; vuggy limestone; fossiliferous dolomite; (Salina Group - Unit F).	
245.5	Prior to run 49, pulled back 10'. Caved to 242.5'; washed back down to 246.0'.
DOLOMITE; gray; micritic; strong; hard; (Salina Group - Unit F). 0°,B,N,UK,Sp,Pl,SR @ 245.5', 245.6' light brownish gray @ 246.0-246.2' 10°,B,N,UK,Pa,WA,SR @ 246.7', 246.9', 247.1'	
247.2	
DOLOMITE; fossiliferous; light brownish gray; micritic; fresh; very strong; hard; medium bedded; w/stylolites; (Salina Group - Unit E). 10°,B,N,UK,Pa,WA,SR @ 247.2', 247.5', 248.2'	
85°,J,T,Ca,Pa,Ir,SR @ 251.0-251.7' 10°,B,N,UK,Pa,WA,SR @ 251.2', 252.3'	Core box #21 starts @ 251.0'.
0°,B,N,UK,Pa,WA,SR @ 252.0', 252.2', 252.6', 252.7'	
0°,B,N,UK,Pa,WA,SR @ 254.0', 254.8'	

BLACK & VEATCH

BORING LOG

BORING NO. CB-C2

CLIENT	PROJECT	PROJECT NO.
Detroit Edison	Fermi 3 COL Application	147483

PROJECT LOCATION	COORDINATES	GROUND ELEVATION (DATUM)	TOTAL DEPTH
Monroe, MI	N 6353.2' E 4517.1'	580.5 ft (NAVD 88)	271.0 (feet)

SURFACE CONDITIONS	COORDINATE SYSTEM	DATE START	DATE FINISHED
Gravel parking area	Plant	07/18/07	08/01/07

LOGGED BY	CHECKED BY	APPROVED BY
TB Bonnie/Ang/Grainger	Em for TB Dogbey/Bonnie	Em Meyer

SAMPLING							CORING									
SAMPLE TYPE	SAMPLE NUMBER	SET 6 INCHES	2ND 6 INCHES	3RD 6 INCHES	N VALUE	SAMPLE RECOVERY	CORE SIZE	RUN NUMBER	RUN LENGTH	RUN RECOVERY	RQD RECOVERY	PERCENT RECOVERY	RQD	DEPTH (FEET)	SAMPLE TYPE	ELEVATION (FEET)	GRAPHIC LOG	CLASSIFICATION OF MATERIALS	REMARKS
														255		325			
														256		324		mottled, gray convoluted band @ 255.6-255.8' 0°,B,N,UK,Pa,WA,SR @ 255.8' 5°,B,N,No,No,Pl,SR @ 256.0', 259.7'	
			256.0											257		323		0°,B,N,UK,Su,WA,SR @ 256.7'	
														258		322		0°,V,N, healed w/anhydrite & very fine dolomite chips @ 257.4' 65°,J,T,anhydrite,Fi,Ir @ 257.4-258.1'	
PQ	51	5.0	5.0	4.5	100	90								259		321			
														260		320		260.3 DOLOMITE; gray; micritic; fresh; strong; hard; w/shale bands; (Salina Group - Unit E). ¼" thick very soft white clay seam @ 260.3'	Core box #22 starts @ 260.3'.
			261.0											261		319		0-10°,V,N,Gy,Fi,Pl @ 261.1', 261.15', 261.2', 261.3', 261.8'	
														262		318		261.3 DOLOMITE; fossiliferous; light brownish gray; micritic; fresh; strong; hard w/gypsum veins & nodules; (Salina Group - Unit E).	
														263		317		262.3 DOLOMITE; argillaceous; gray; micritic; fresh; very strong; hard; interbedded w/thin shaley partings & bands; & gypsum veins & nodules; (Salina Group - Unit E).	
PQ	52	5.0	4.9	4.2	98	84								264		316		0-10°,V,N,Gy,Fi,Pl @ 262.5', 263.8' bedding contorted @ 263.0-264.4' shale partings @ 263.5', 263.8', 264.4', 265.8' 0-10°,V,N,Gy,Fi,Pl @ 264.6', 264.9', 264.95', 265.0'	
														265		315			
			266.0											266		314		266.7 DOLOMITE; argillaceous; gray; micritic; fresh; very strong; hard; interbedded w/numerous gypsum & crystal filled gypsum veins; (Salina Group - Unit E).	
														267		313		267.4 GYPSUM; (Salina Group - Unit E). 0°,V,VN to N,Gy,Fi,Pl @ 267.4', 267.5', 267.55', 267.6', 267.7', 267.75', 267.85', 267.9', 267.95', 268.05', 268.15'	
														268		312			
PQ	53	5.0	4.9	4.9	98	98								269		311		267.9 DOLOMITE; light gray & white; micritic; fresh; very strong; hard; interbedded w/gypsum; (Salina Group - Unit E).	Core box #23 starts @ 269.8'.
														270					

BLACK & VEATCH

BORING LOG

BORING NO. CB-C2

CLIENT	PROJECT	PROJECT NO.
Detroit Edison	Fermi 3 COL Application	147483

PROJECT LOCATION	COORDINATES	GROUND ELEVATION (DATUM)	TOTAL DEPTH
Monroe, MI	N 6353.2' E 4517.1'	580.5 ft (NAVD 88)	271.0 (feet)

SURFACE CONDITIONS	COORDINATE SYSTEM	DATE START	DATE FINISHED
Gravel parking area	Plant	07/18/07	08/01/07

LOGGED BY	CHECKED BY	APPROVED BY
TB EOA GCO for Bonnie/Ang/Grainger	EM for TB Dogbey/Bonnie	Meyer EM

SAMPLING: SAMPLE TYPE | SAMPLE NUMBER | SET 6 INCHES | 2ND 6 INCHES | 3RD 6 INCHES | N VALUE | SAMPLE RECOVERY

CORING: CORE SIZE | RUN NUMBER | RUN LENGTH | RUN RECOVERY | RQD RECOVERY | PERCENT RECOVERY | RQD

DEPTH (FEET)	SAMPLE TYPE	ELEVATION (FEET)	GRAPHIC LOG	CLASSIFICATION OF MATERIALS	REMARKS
270		310		0-5°,V,N,anhydrite,Fi,Ir @ 268.4'	
				269.0	
271		309		DOLOMITE; gray; micritic; fresh; very strong; hard; w/gypsum & anhydrite partings & veins; & shale partings; (Salina Group - Unit E).	Bottom of boring @ 271.0'. Water level @ 24.0' at completion of drilling. Hole caved to 184.0'. Backfilled w/bentonite chips from 271' on 09/12/07.
272		308			
273		307			
274		306			
275		305			
276		304			
277		303			
278		302			
279		301			
280		300			
281		299			
282		298			
283		297			
284		296			
285					

BLACK & VEATCH

BORING LOG

BORING NO. CB-C3

SHEET 1 OF 19

CLIENT	PROJECT	PROJECT NO.
Detroit Edison	Fermi 3 COL Application	147483

PROJECT LOCATION	COORDINATES	GROUND ELEVATION (DATUM)	TOTAL DEPTH
Monroe, MI	N 6341.4' E 4673.8'	581.1 ft (NAVD 88)	273.7 (feet)

SURFACE CONDITIONS	COORDINATE SYSTEM	DATE START	DATE FINISHED
Gravel parking lot	Plant	07/17/07	08/12/07

LOGGED BY	CHECKED BY	APPROVED BY
TB ECA TB for Bonnie/Ang/Mass	TB Dogbey/Bonnie	Meyer

SAMPLING							CORING									
SAMPLE TYPE	SAMPLE NUMBER	SET 6 INCHES	2ND 6 INCHES	3RD 6 INCHES	N VALUE	SAMPLE RECOVERY	CORE SIZE	RUN NUMBER	RUN LENGTH	RUN RECOVERY	RQD RECOVERY	PERCENT RECOVERY	RQD	DEPTH (FEET)	SAMPLE TYPE	ELEVATION (FEET)	GRAPHIC LOG	CLASSIFICATION OF MATERIALS	REMARKS
														0		581		Gravelly COBBLES with Sand - About 60% angular, very hard cobbles; w/max. size 9"; about 20% fine to coarse, angular, hard gravel w/max. size 3"; about 15% fine to coarse, angular, hard sand; about 5% fines; gray; dry; weak reaction w/HCl; homogeneous; (Fill).	Boring advanced w/vacuum excavation.
										1.3				1		580			Vacuum excavation encountered refusal @ 1.3'. Below 1.3' continued w/4" ID sonic continuous sampler w/ nominal 6" temporary steel casing advanced w/sampler.
S	1					NR								2		579			
														3		578			
														4		577			
														5		576			
														6		575			
														7		574			
														8		573			
														9		572			
										10.0				10		571			
														11		570			
														12		569			
S	2					NR								13		568			
														14		567			Discrete sample S02A collected from 14.0-15.0'.
														15					

5/13/2008 10:07 AM DTE - Fermi 3 Geotech

BLACK & VEATCH

BORING LOG

BORING NO. CB-C3

CLIENT	PROJECT	PROJECT NO.
Detroit Edison	Fermi 3 COL Application	147483

PROJECT LOCATION	COORDINATES	GROUND ELEVATION (DATUM)	TOTAL DEPTH
Monroe, MI	N 6341.4' E 4673.8'	581.1 ft (NAVD 88)	273.7 (feet)

SURFACE CONDITIONS	COORDINATE SYSTEM	DATE START	DATE FINISHED
Gravel parking lot	Plant	07/17/07	08/12/07

LOGGED BY	CHECKED BY	APPROVED BY
TB EJA TB for Bonnie/Ang/Mass	Em for Dogbey/Bonnie TB	Em Meyer

SAMPLING							CORING									
SAMPLE TYPE	SAMPLE NUMBER	SET 6 INCHES	2ND 6 INCHES	3RD 6 INCHES	N VALUE	SAMPLE RECOVERY	CORE SIZE	RUN NUMBER	RUN LENGTH	RUN RECOVERY	RQD RECOVERY	PERCENT RECOVERY	RQD	DEPTH (FEET)	SAMPLE TYPE	ELEVATION (FEET)
						15.0								15		566
S	3												NR	16		565
														17		564
						17.3										
TW	4												1.7	18		563
														19		562
														20		561
														21		560
TW	5												1.2	22		559
														23		558
SPT	6	12	27	27	54	1.5								24		557
														25		556
														26		555
SPT	7	18	27	36	63	1.0								27		554
														28		553
SPT	8	9	29	23	52	1.0								29		552
														30		

GRAPHIC LOG	CLASSIFICATION OF MATERIALS	REMARKS
	15.4 — PEAT (PT) - organic odor — 15.5	Discrete sample B-2A taken from S-2 @ 14.0-15.0'.
	Fat CLAY (CH) - About 100% high plasticity, high toughness, no dilatancy, high dry strength fines; dark gray; soft; moist; no reaction w/HCl	Set nominal 6" temporary steel casing to 15.5'. Hole opened to 17.7'.
	17.5 — Clayey GRAVEL with Sand (GC) - About 55% gravel w/max. size ¾"; about 26% LL=41,PL=11, no dilatancy fines; about 19% sand; grayish brown; hard; moist; (Glacial Till).	Water level @ 9.6' on 07/24/07. Hole open to 16.9'. Below 16.9', continued w/NWJ rods & 4½" tricone bit using bentonite mud as drilling fluid. SPT performed w/ D-50 automatic hammer.
	grades olive brown @ 21.0'	PP = 4.5 TSF @ 20.0'.
	22.8 — Sandy Silty CLAY (CL-ML) - About 59% LL=18,PL= 11, no dilatancy fines; about 37% fine to coarse, subrounded sand; about 4% fine to coarse, subangular to subrounded gravel w/max. size ½", fractured w/2 hammer blows; dark gray; very hard; moist; (Glacial Till).	PP > 4.5 TSF @ 22.5'.
		PP > 4.5 TSF @ 23.5'.
	grades w/max. gravel size 1½" @ 26.5'	PP > 4.5 TSF @ 26.0'.
	grades w/boulders	Boulder @ 27.5'.
	28.5 — Silty GRAVEL (GM) - About 70% coarse, subangular to subrounded, hard gravel w/max. size 1½"; about 30% low plasticity, low toughness, rapid dilatancy fines; grayish brown; very dense; wet; (Weathered Rock).	

BLACK & VEATCH

BORING LOG

BORING NO. CB-C3

CLIENT	PROJECT	PROJECT NO.
Detroit Edison	Fermi 3 COL Application	147483

PROJECT LOCATION	COORDINATES	GROUND ELEVATION (DATUM)	TOTAL DEPTH
Monroe, MI	N 6341.4' E 4673.8'	581.1 ft (NAVD 88)	273.7 (feet)

SURFACE CONDITIONS	COORDINATE SYSTEM	DATE START	DATE FINISHED
Gravel parking lot	Plant	07/17/07	08/12/07

LOGGED BY	CHECKED BY	APPROVED BY
TB Bonnie/Ang/Mass TB for	Dogbey/Bonnie TB	Meyer

SAMPLING: SAMPLE TYPE	SAMPLE NUMBER	SET 6 INCHES	2ND 6 INCHES	3RD 6 INCHES	N VALUE	SAMPLE RECOVERY	CORING: CORE SIZE	RUN NUMBER	RUN LENGTH	RUN RECOVERY	RQD RECOVERY	PERCENT RECOVERY	RQD	DEPTH (FEET)	SAMPLE TYPE	ELEVATION (FEET)	GRAPHIC LOG	CLASSIFICATION OF MATERIALS	REMARKS
														30		551		30.0	
SPT	9	34	14	26	40	1.0								31		550		Poorly graded GRAVEL (GP) - About 90% fine to coarse, subangular gravel max. size 1½", fractured w/2 hammer blows; about 10% medium to coarse, subangular sand; gray; dense; wet; (Weathered Rock).	
														32		549			
			32.5															32.5	
S	10					3.5								33		548		DOLOMITE; crystalline; light brownish gray; micritic; fresh; strong; hard; (Bass Islands Group).	Below 32.5' continued w/4" ID sonic continuous sampler w/ nominal 6" temporary steel casing advanced w/sampler. Sonic core box #1 starts @ 32.5'. Set nominal 6" temporary steel casing to 35.5'. Hole open to 36.0'. Core box #1 starts @ 36.0'. Below 36.0', continued w/ triple tube wire line core barrel w/diamond bit using water as drilling fluid.
														34		547			
														35		546			
			36.0											36		545		shale parting - 0°,B,T,WA,SR @ 36.1' 60°,J,T,No,No,Pl,Healed @ 36.3-36.6', 36.35-36.5'	
HQ	1	2.5	2.5	1.8	100	72								37		544		shale partings - 0°,B,T,Pl,SR @ 37.3', 37.6', 37.85' 90°,J,T,Cl,Sp,Pl,SR @ 37.3-37.6'	
														38		543			
			38.5											39		542		0°,J,VN,No,No,Pl,SR @ 39.3', 40.2'	
														40		541		90°,J,T,No,No,Pl,SR @ 40.2-40.8', 42.0-43.2'	
HQ	2	5.0	5.0	3.4	100	68								41		540		0°,J,VN,No,No,Pl,SR @ 40.8', 41.0', 41.2'	
																		41.3	
														42		539		DOLOMITE; crystalline; grayish brown; micritic; fresh; strong; hard; banded; (Bass Islands Group).	
														43		538		0°,J,VN,No,No,Pl,SR @ 43.0'	
			43.5											44		537		shale partings - 0°,B,VN,Pl,SR @ 43.9', 44.25', 44.8' 90°,J,T,No,No,Pl,SR @ 43.9-44.3', 44.8-45.1', 43.6-43.8' (on edge of core)	
														45					

BLACK & VEATCH

BORING LOG

BORING NO. CB-C3

CLIENT	PROJECT	PROJECT NO.
Detroit Edison	Fermi 3 COL Application	147483

PROJECT LOCATION	COORDINATES	GROUND ELEVATION (DATUM)	TOTAL DEPTH
Monroe, MI	N 6341.4' E 4673.8'	581.1 ft (NAVD 88)	273.7 (feet)

SURFACE CONDITIONS	COORDINATE SYSTEM	DATE START	DATE FINISHED
Gravel parking lot	Plant	07/17/07	08/12/07

LOGGED BY	CHECKED BY	APPROVED BY
TB Bonnie/Ang/Mass ELA TB for	EM for Dogbey/Bonnie TB	EM Meyer

SAMPLING: SAMPLE TYPE, SAMPLE NUMBER, SET 6 INCHES, 2ND 6 INCHES, 3RD 6 INCHES, N VALUE, SAMPLE RECOVERY

CORING: CORE SIZE, RUN NUMBER, RUN LENGTH, RUN RECOVERY, RQD RECOVERY, PERCENT RECOVERY, RQD

SAMPLE TYPE	SAMPLE NUMBER	SET 6 INCHES	2ND 6 INCHES	3RD 6 INCHES	N VALUE	SAMPLE RECOVERY	DEPTH (FEET)	ELEVATION (FEET)	CLASSIFICATION OF MATERIALS	REMARKS
							45	536	shale parting - 0°,B,VN,Pl,SR @ 45.4'	
HQ	3	5.0	5.0	3.7	100	74	46	535	shale partings - 0°,B,VN,Pl,SR @ 46.0', 46.15', 46.4'	
									46.4 DOLOMITE; gray; micritic; fresh; strong; hard; slightly pitted; (Bass Islands Group).	
							47	534	50°,J,T,No,No,Pl,SR @ 46.7-46.8' 20°,J,T,No,No,Pl,SR @ 46.9-48.0'	
							48	533	10°,J,T,No,No,Ir,R @ 47.8'	
			48.5							
							49	532	60°,J,T,No,No,Pl,SR @ 49.0-49.3' 50°,J,T,No,No,Pl,SR @ 49.3-49.4'	Core box #2 starts @ 49.4'.
							50	531		
HQ	4	5.0	4.6	3.8	92	76	51	530	80°,J,No,No,Pl,Slk @ 50.6-51.0' shale band @ 50.6' 40°,J,No,No,Pl,SR @ 50.6' 10°,J,T,No,No,Pl,SR @ 51.5-51.6'	
							52	529		
							53	528		
			53.5							
							54	527		
							55	526	10°,J,VN,Cl,Fi,Pl,SR @ 54.6'	
HQ	5	5.0	5.0	5.0	100	100	56	525	grades w/stylolites @ 55.5' convoluted bedding @ 55.8-56.0' 70°,J,VN,No,No,Pl,SR @ 55.8-56.0' 0°,J,VN,No,No,Pl,SR @ 56.0' 0°,B,T,No,No,Pl,SR @ 56.6'	
							57	524	grades light grayish brown @ 57.0' 40°,J,T,No,No,Pl,SR @ 57.1-57.3'	
							58	523	grades no stylolites @ 58.0' 10°,J,T,No,No,Pl,SR @ 58.0'	
			58.5						brecciated, healed @ 58.5-60.0'	
							59	522		
							60		20°,J,T,No,No,Pl,SR @ 59.7-59.8'	

5/13/2008 10:07 AM DTE - Fermi 3 Geotech

BLACK & VEATCH

BORING LOG

BORING NO. CB-C3

CLIENT	PROJECT	PROJECT NO.
Detroit Edison	Fermi 3 COL Application	147483

PROJECT LOCATION	COORDINATES	GROUND ELEVATION (DATUM)	TOTAL DEPTH
Monroe, MI	N 6341.4' E 4673.8'	581.1 ft (NAVD 88)	273.7 (feet)

SURFACE CONDITIONS	COORDINATE SYSTEM	DATE START	DATE FINISHED
Gravel parking lot	Plant	07/17/07	08/12/07

LOGGED BY	CHECKED BY	APPROVED BY
TB ECA Bonnie/Ang/Mass	TB for Dogbey/Bonnie	Meyer

SAMPLING							CORING									
SAMPLE TYPE	SAMPLE NUMBER	SET 6 INCHES	2ND 6 INCHES	3RD 6 INCHES	N VALUE	SAMPLE RECOVERY	CORE SIZE	RUN NUMBER	RUN LENGTH	RUN RECOVERY	RQD RECOVERY	PERCENT RECOVERY	RQD	DEPTH (FEET)	SAMPLE TYPE	ELEVATION (FEET)	GRAPHIC LOG	CLASSIFICATION OF MATERIALS	REMARKS
														60		521		60.0	
							HQ	6	5.0	5.0	4.5	100	90	61		520		DOLOMITE; gray; (Bass Islands Group). J,VN,No,No,WA,SR @ 60.5' 60.9 DOLOMITE; mottled; (Bass Islands Group). shale band @ 61.1-61.25 61.5	Core box #3 starts @ 61.1'.
														62		519		DOLOMITE; oolitic; (Bass Islands Group). 90°,F,T,No,No,WA,SR @ 61.5-64.5' (healed)	
														63		518			
										63.5				64		517			
																		64.6	
							HQ	7	5.0	5.0	3.0	100	60	65		516		DOLOMITE; grayish brown & dark gray, mottled; micritic; fresh; strong; very hard; convoluted bedding; (Bass Islands Group). 20°,J,T,No,No,Pl,SR @ 64.6', 66.6-66.7' 10°,J,T,No,No,Pl,SR @ 64.7', 67.4', 68.2'	
														66		515		65.1 SHALE; very dark gray; fresh; moderately strong; hard; fissile; (Bass Islands Group).	
																		65.2	
														67		514		DOLOMITE; light gray; micritic; fresh; strong; hard; (Bass Islands Group). 80°,J,T,No,No,Pl,SR @ 65.2-65.4'	
																		65.4	
										68.5				68		513		DOLOMITE; light brownish gray; micritic; fresh; strong; hard; banded w/brecciated dolomite; (Bass Islands Group). brecciated dolomite bed, healed @ 66.5-67.2 30°,J,T,No,No,Pl,SR @ 66.95-67.1' shale parting @ 67.2-67.25' 90°,J,T,No,No,Pl,SR @ 67.25-67.4'(2)	Water level @ 21.7' on 08/09/07.
														69		512		68.3	
							HQ	8	5.0	4.5	0.4	90	8	70		511		DOLOMITE; light brownish gray; micritic; fresh; strong; hard; w/stylolites; (Bass Islands Group). 10°,J,T,No,No,Pl,SR @ 68.9', 69.6', 69.8', 70.5' 90°,J,T,No,No,Pl,SR @ 68.9-69.1' 0°,B,T,No,No,Pl,SR @ 69.2', 70.0', 70.2' 80°,J,T,No,No,Pl,SR @ 69.7-70.3' 30°,J,T,No,No,Pl,SR @ 70.7-71.0' 90°,J,T,No,No,Pl,SR 71.1-71.5' 10°,J,T,No,No,Pl,SR @ 71.1' highly fractured @ 71.4-73.0' 90°,J,T,No,No,Pl,SR 72.0-72.2' 0°,B,T,No,No,Pl,SR @ 72.0'	
														71		510			
														72		509			
														73		508			
										73.5								90°,J,N,No,No,Pl,SR @ 73.5-73.7' 80°,J,T,No,No,Pl,Sr @ 73.75-74.15' 0°,B,T,No,No,Pl,SR @ 73.75', 74.15'	
														74		507			
														75					

BLACK & VEATCH **BORING LOG**

BORING NO. CB-C3
SHEET 6 OF 19

CLIENT	PROJECT	PROJECT NO.
Detroit Edison	Fermi 3 COL Application	147483

PROJECT LOCATION	COORDINATES	GROUND ELEVATION (DATUM)	TOTAL DEPTH
Monroe, MI	N 6341.4' E 4673.8'	581.1 ft (NAVD 88)	273.7 (feet)

SURFACE CONDITIONS	COORDINATE SYSTEM	DATE START	DATE FINISHED
Gravel parking lot	Plant	07/17/07	08/12/07

LOGGED BY	CHECKED BY	APPROVED BY
TB Bonnie/Ang/Mass	TB Dogbey/Bonnie	Meyer

SAMPLING							CORING									
SAMPLE TYPE	SAMPLE NUMBER	SET 6 INCHES	2ND 6 INCHES	3RD 6 INCHES	N VALUE	SAMPLE RECOVERY	CORE SIZE	RUN NUMBER	RUN LENGTH	RUN RECOVERY	RQD RECOVERY	PERCENT RECOVERY	RQD	DEPTH (FEET)	ELEVATION (FEET)	CLASSIFICATION OF MATERIALS	REMARKS
														75	506	20°,J,T,No,No,Pl,SR @ 75.2'	Core box #4 starts @ 75.2'.
HQ	9							9	5.0	5.0	4.1	100	82	76	505		
														77	504		
														78	503	70°,J,T,No,No,Pl,SR @ 78.3-78.8'	
										78.5				79	502		
																20°,J,T,No,No,Pl,SR @ 79.5-79.6'	
														80	501	45°,J,T,No,No,Pl,SR @ 80.25-80.8'	
HQ	10							10	5.0	5.0	4.5	100	90	81	500	shale parting @ 81.25' brecciated, healed @ 81.25-81.7'	
														82	499	10°,J,T,Cl,Sp,Pl,SR @ 81.7' 0°,J,T,Cl,Sp,Pl,SR @ 82.1'	
														83	498	0°,J,T,Cl,Sp,Pl,SR @ 82.9'	
										83.5						claystone; gray; slightly weathered, moderately strong; low hardness @ 83.5-83.7'	
														84	497		
														85	496	shale parting - 0°,B,VN,Pl,SR @ 84.9'	
HQ	11							11	5.0	5.0	3.8	100	76	86	495	shale parting - 0°,B,VN,Pl,SR @ 85.9' shale parting - 0°,B,VN,Pl,SR @ 86.2'	
																shale partings - 0°,B,VN,Pl,SR @ 86.6', 87.1'	
														87	494	pitted @ 87.2-87.8'	
														88	493	87.8 DOLOMITE; gray; micritic; fresh; strong; hard; (Bass Islands Group). shale parting @ 88.3'	
										88.5						88.4 SHALE; dark gray; (Bass Islands Group).	Core box #5 starts # 88.5'.
														89	492	88.8 DOLOMITE; gray; micritic; fresh; strong; hard; (Bass Islands Group).	
														90			

BLACK & VEATCH

BORING LOG

BORING NO. CB-C3

CLIENT	PROJECT	PROJECT NO.
Detroit Edison	Fermi 3 COL Application	147483

PROJECT LOCATION	COORDINATES	GROUND ELEVATION (DATUM)	TOTAL DEPTH
Monroe, MI	N 6341.4' E 4673.8'	581.1 ft (NAVD 88)	273.7 (feet)

SURFACE CONDITIONS	COORDINATE SYSTEM	DATE START	DATE FINISHED
Gravel parking lot	Plant	07/17/07	08/12/07

LOGGED BY	CHECKED BY	APPROVED BY
Bonnie/Ang/Mass	Dogbey/Bonnie	Meyer

SAMPLING							CORING									
SAMPLE TYPE	SAMPLE NUMBER	SET 6 INCHES	2ND 6 INCHES	3RD 6 INCHES	N VALUE	SAMPLE RECOVERY	CORE SIZE	RUN NUMBER	RUN LENGTH	RUN RECOVERY	RQD RECOVERY	PERCENT RECOVERY	RQD	DEPTH (FEET)	SAMPLE TYPE	ELEVATION (FEET)	GRAPHIC LOG	CLASSIFICATION OF MATERIALS	REMARKS
							HQ	12	4.0	1.25	0.8	31	20	90		491		0°,B,T,No,No,WA,SR @ 90.0'	
														91		490			
														92		489			
										92.5									
							HQ	13	1.0	0.0	0.0	0	0	93		488			Core barrel blocked @ 92.5'.
										93.5									
														94		487			
														95		486			
							HQ	14	5.0	0.0	0.0	0	0	96		485			Rapid penetration @ 95.5-97.5'.
														97		484			
														98		483			
										98.5									
							HQ	15	1.0	0.0	0.0	0	0	99		482			
										99.5								99.5	
							HQ	16	1.5	1.5	0.5	100	35	100		481		DOLOMITE; grayish brown & gray; micritic; fresh; strong; hard; banded; (Bass Islands Group). shale partings - 0°,B,VN,Pl,SR @ 99.7', 100.4', 100.5', 100.6', 100.7', 100.8', 100.9' 15°,J,VN,Cl,Sp,Pl,SR @ 100.15' 90°,J,T,No,Pl,SR @ 99.7-99.9', 100.4-100.7' (healed) shale partings - 0°,B,VN,Sp,Pl,SR @ 101.05', 101.1', 101.5', 101.7', 101.8', 102.05', 102.25' 90°,J,VN,Cl,Sp,Pl,SR @ 101.5-102.1', 102.0-102.1'	Following run HQ-15, pulled outer barrel. Bedrock pieces in bottom of outer barrel - likely cause of '0' recovery in HQ-13, 14, & 15. Pieces saved as HQ-15 in core box.
										101.0				101		480			
							HQ	17	2.5	2.5	1.0	100	40	102		479		shale partings - 0°,B,VN,Sp,Pl,SR @ 102.5', 102.7'	
														103		478		shale parting - 0°,B,VN,Sp,Pl,SR @ 103.3'	
										103.5								shale partings - 0°,B,VN,Sp,Pl,SR @ 103.6', 103.65', 103.85' 90°,J,T,No,No,Pl,SR @ 103.65-103.85',103.95-104.05' 90°,J,T,H,Fi,Pl,SR @ 103.85-103.95' (healed)	
														104		477			
														105					

BLACK & VEATCH

BORING LOG

BORING NO. CB-C3

CLIENT	PROJECT	PROJECT NO.
Detroit Edison	Fermi 3 COL Application	147483

PROJECT LOCATION	COORDINATES	GROUND ELEVATION (DATUM)	TOTAL DEPTH
Monroe, MI	N 6341.4' E 4673.8'	581.1 ft (NAVD 88)	273.7 (feet)

SURFACE CONDITIONS	COORDINATE SYSTEM	DATE START	DATE FINISHED
Gravel parking lot	Plant	07/17/07	08/12/07

LOGGED BY	CHECKED BY	APPROVED BY
TB BCA TB for Bonnie/Ang/Mass	Eng for Dogbey/Bonnie TB	Eng Meyer

SAMPLING							CORING									
SAMPLE TYPE	SAMPLE NUMBER	SET 6 INCHES	2ND 6 INCHES	3RD 6 INCHES	N VALUE	SAMPLE RECOVERY	CORE SIZE	RUN NUMBER	RUN LENGTH	RUN RECOVERY	RQD RECOVERY	PERCENT RECOVERY	RQD	DEPTH (FEET)	SAMPLE TYPE	ELEVATION (FEET)	GRAPHIC LOG	CLASSIFICATION OF MATERIALS	REMARKS
														105		476		103.9 DOLOMITE; gray; micritic; fresh; strong; hard; (Bass Islands Group). shale partings - 0°,B,VN,Sp,Pl,SR @ 103.95', 104.05', 104.3', 104.6', 104.8' 90°,J,T,H,Fi,Pl,SR @ 104.05-105.1' 90°,J,T,No,No,Pl,SR @ 106.1-106.2' shale partings - 0°,B,VN,Sp,Pl,SR @ 106.1', 106.2', 106.3' 90°,J,T,H,Fi,Pl,SR @ 106.2-108.2'	
HQ	18		4.6	2.5	92	50	HQ	18	5.0	4.6	2.5	92	50	106		475			
														107		474		107.5 DOLOMITE; light brownish gray; micritic; fresh; strong; hard; w/stylolites; (Bass Islands Group). shale partings - 0°,B,VN,Sp,Pl,SR @ 108.1', 108.5', 108.8', 109.2' 90°,J,T,No,No,Pl,SR @ 108.2-108.8', 108.8-109.2' (on edge of core) grades gray w/stylolites @ 108.3-109.3' shale partings - 0°,B,VN,Sp,Pl,SR @ 109.5', 109.8', 109.9' 80°,J,T,No,No,Pl,SR @ 109.9-110.7' brecciated, healed @ 110.1-110.6'	
			108.5											108		473			
HQ	19		5.0	1.1	100	22	HQ	19	5.0	5.0	1.1	100	22	109		472			
														110		471			
														111		470		shale parting - 0°,B,VN,Sp,Pl,SR @ 111.5' 20°,J,VN,Cl,Sp,Pl,R @ 111.8-111.9' 90°,J,T,No,No,Pl,SR @ 111.8-113.5'	Core box #6 starts @ 111.5'.
														112		469			
														113		468		shale partings - 0°,B,VN,Sp,Pl,SR @ 112.7', 112.9', 113.0', 113.2' fragmented @ 113.0-113.2'	Water level @ 26.3' prior to drilling on 08/10/07.
			113.5											114		467		shale partings - 0°,B,VN,Sp,Pl,SR @ 113.6', 116.65'	
														115		466		pitted @ 114.1-116.6'	
HQ	20		5.0	4.5	100	90	HQ	20	5.0	5.0	4.5	100	90	116		465		60°,J,T,No,No,Pl,SR @ 116.1-116.5'	
														117		464		116.6 DOLOMITE; grayish brown; micritic; fresh; strong; hard; (Bass Islands Group). 0°,B,VN,anhydrite,Fi,Pl,SR @ 117.1' anhydrite filled vug @ 117.4'	
														118		463		30°,J,VN,Ca,Fi,Pl,SR @ 117.9-118.1' anhydrite/shale parting @ 118.1' 75°,J,T,No,No,Pl,S @ 118.2-118.5'	
			118.5											119		462			
														120					

BLACK & VEATCH

BORING LOG

BORING NO. CB-C3

CLIENT	PROJECT	PROJECT NO.
Detroit Edison	Fermi 3 COL Application	147483

PROJECT LOCATION	COORDINATES	GROUND ELEVATION (DATUM)	TOTAL DEPTH
Monroe, MI	N 6341.4' E 4673.8'	581.1 ft (NAVD 88)	273.7 (feet)

SURFACE CONDITIONS	COORDINATE SYSTEM	DATE START	DATE FINISHED
Gravel parking lot	Plant	07/17/07	08/12/07

LOGGED BY	CHECKED BY	APPROVED BY
TB ECA TB for Bonnie/Ang/Mass	ECA for TB Dogbey/Bonnie	ECA Meyer

SAMPLING							CORING									
SAMPLE TYPE	SAMPLE NUMBER	SET 6 INCHES	2ND 6 INCHES	3RD 6 INCHES	N VALUE	SAMPLE RECOVERY	CORE SIZE	RUN NUMBER	RUN LENGTH	RUN RECOVERY	RQD RECOVERY	PERCENT RECOVERY	RQD	DEPTH (FEET)	SAMPLE TYPE	ELEVATION (FEET)	GRAPHIC LOG	CLASSIFICATION OF MATERIALS	REMARKS
														120		461		brecciated, healed @ 120.1-120.5'	
																		convoluted bedding @ 120.5-120.8'	
							HQ	21	5.0	3.8	1.6	76	32	121		460		shale parting - 0°,B,VN,Sp,Pl,SR @ 120.9'	
																		0°,B,VN,No,No,Pl,SR @ 121.7'	
														122		459		121.7 DOLOMITE; gray; micritic; fresh; strong; hard; (Salina Group - Unit F).	
														123		458		0°,B,VN,Ca,Fi,Pl,SR @ 121.9', 122.1' 90°,J,T,No,No,Pl,SR @ 122.1-122.3', 122.5-122.9', 123.0-123.5' 0°,B,VN,No,No,Pl,SR @ 122.3', 122.4', 122.5', 122.7', 123.05', 123.25'	
										123.5								shale parting @ 122.35'	
														124		457			
														125		456		90°,J,T,No,No,Pl,SR @ 125.0-125.5'	
							HQ	22	5.0	3.1	0.5	62	10					0°,B,VN,No,No,Pl,SR @ 125.5', 126.0', 126.1', 126.3', 126.5'	
														126		455		126.5 DOLOMITE; grayish brown; micritic; fresh; strong; hard; banded; w/gypsum beds, veins; (Salina Group - Unit F).	
														127		454		shale parting @ 126.65'	
														128		453		gypsum @ 126.65-126.7' 0°,B,VN,No,No,Pl,SR @ 126.7', 126.9'	Core box #7 starts @ 127.8'.
										128.5								fragmented @ 126.7-127.1'	
														129		452		90°,J,VN,Ca,Fi,WA,SR @ 127.1-127.8' gypsum band @ 127.1-127.3' gypsum band @ 127.8-127.9'	
																		90°,J,T,No,No,Pl,SR @ 127.9-128.1' gypsum band @ 128.0-128.1'	
														130		451		0°,B,T,No,No,Pl,SR @ 130.1', 130.5', 130.65', 130.9', 131.15'	
							HQ	23	5.0	3.0	0.7	60	14	131		450		gypsum band @ 130.2-130.3' gypsum band @ 130.45-130.5' 90°,J,T,No,No,Pl,SR @ 130.5-130.6' 70°,J,VN,No,No,Pl,SR @ 130.6-130.8', 131.6-131.8'	
														132		449		131.7 DOLOMITE; argillaceous; light grayish brown; micritic; fresh; strong; hard; (Salina Group - Unit F).	
														133		448		anhydrite convoluted veins @ 131.8-132.1' 90°,J,T,No,No,Pl,SR @ 132.35-133.7'	
										133.5								132.8 CLAYSTONE; gray; highly weathered; weak; low hardness; w/interbedded dolomite & limestone bands; (Salina Group - Unit F).	
														134		447		fragmented @ 132.8-133.2', 132.3-133.5' 10°,J,T,No,No,Pl,SR @ 133.1', 133.3' limestone band @ 133.2-133.3' limestone band @ 134.1-134.2'	
														135					

BLACK & VEATCH **BORING LOG**

BORING NO. CB-C3
SHEET 10 OF 19

CLIENT	PROJECT	PROJECT NO.
Detroit Edison	Fermi 3 COL Application	147483

PROJECT LOCATION	COORDINATES	GROUND ELEVATION (DATUM)	TOTAL DEPTH
Monroe, MI	N 6341.4' E 4673.8'	581.1 ft (NAVD 88)	273.7 (feet)

SURFACE CONDITIONS	COORDINATE SYSTEM	DATE START	DATE FINISHED
Gravel parking lot	Plant	07/17/07	08/12/07

LOGGED BY	CHECKED BY	APPROVED BY
TB EVA TB for Bonnie/Ang/Mass	Dogbey/Bonnie TB	Meyer EM

SAMPLING							CORING									
SAMPLE TYPE	SAMPLE NUMBER	SET 6 INCHES	2ND 6 INCHES	3RD 6 INCHES	N VALUE	SAMPLE RECOVERY	CORE SIZE	RUN NUMBER	RUN LENGTH	RUN RECOVERY	RQD RECOVERY	PERCENT RECOVERY	RQD	DEPTH (FEET)	SAMPLE TYPE	ELEVATION (FEET)	GRAPHIC LOG	CLASSIFICATION OF MATERIALS	REMARKS
							HQ	24	5.0	2.3	0.0	46	0	135		446		limestone band @ 134.8-134.9' limestone band @ 135.5-135.6' limestone @ 136.2-136.5' dolomite band @ 137.5-137.7' dolomite @ 138.2-138.5' slightly weathered @ 138.5-138.7', 140.3-140.5' dolomite @ 138.7-139.0'	Core loss @ 135.0'-138.5'.
							HQ	25	2.5	1.7	0.4	68	16	140		441		139.3 DOLOMITE; (Salina Group - Unit F). 10°,B,VN,No,No,PI,SR @ 139.6', 139.7', 139.9' 90°,J,T,No,No,PI,SR @ 139.7-140.3' 0°,B,VN,No,No,PI,SR @ 140.0', 141.05', 141.1', 141.15'	
							HQ	26	2.5	1.2	0.0	48	0	142		439		140.4 CLAYSTONE; gray; highly weathered; weak; low hardness; w/interbedded dolomite & limestone bands; (Salina Group - Unit F). dolomite band @ 141.2-141.4' limestone band; fragmented @ 141.6-141.7' dolomite band; w/calcite bedding @ 141.9-142.2'	
							HQ	27	2.5	1.2	0.0	48	0	145		436		142.5 DOLOMITE; (Salina Group - Unit F). 0°,B,T,No,No,PI,SR @ 142.7', 142.8', 143.95', 143.1', 143.15', 143.2' 90°,J,T,No,No,PI,SR @ 142.7-143.25' 143.3 CLAYSTONE; gray; highly weathered; weak; low hardness; w/interbedded dolomite & limestone bands; (Salina Group - Unit F). 144.2 DOLOMITE; light brownish gray; (Salina Group - Unit F). highly fractured @ 144.2-144.5' 90°,J,T,No,No,PI,SR @ 144.5-144.7' 0°,B,T,No,No,PI,SR @ 144.5', 144.6', 144.7'	
							HQ	28	2.5	0.2	0.0	8	0	147		434		144.7 CLAYSTONE; gray; highly weathered; weak; low hardness; w/interbedded dolomite & limestone bands; (Salina Group - Unit F). 0°,B,T,No,No,PI,SR @ 145.0' 145.2 DOLOMITE; bluish gray; highly fractured; (Salina Group - Unit F). 145.7 CLAYSTONE; gray; highly weathered; weak; low hardness; w/interbedded dolomite & limestone bands; (Salina Group - Unit F). dolomite; argillaceous @ 148.8-149.2' 90°,J,T,No,No,PI,SR @ 149.0-149.2' 60°,J,T,No,No,PI,SR @ 149.1-149.2'	
							HQ	29	2.5	1.3	0.0	52	0	150		432			

5/13/2008 10:07 AM DTE - Fermi 3 Geotech

BLACK & VEATCH

BORING LOG

BORING NO. CB-C3

CLIENT	PROJECT	PROJECT NO.
Detroit Edison	Fermi 3 COL Application	147483

PROJECT LOCATION	COORDINATES	GROUND ELEVATION (DATUM)	TOTAL DEPTH
Monroe, MI	N 6341.4' E 4673.8'	581.1 ft (NAVD 88)	273.7 (feet)

SURFACE CONDITIONS	COORDINATE SYSTEM	DATE START	DATE FINISHED
Gravel parking lot	Plant	07/17/07	08/12/07

LOGGED BY	CHECKED BY	APPROVED BY
Bonnie/Ang/Mass	Dogbey/Bonnie	Meyer

SAMPLING							CORING										
SAMPLE TYPE	SAMPLE NUMBER	SET 6 INCHES	2ND 6 INCHES	3RD 6 INCHES	N VALUE	SAMPLE RECOVERY	CORE SIZE	RUN NUMBER	RUN LENGTH	RUN RECOVERY	RQD RECOVERY	PERCENT RECOVERY	RQD	DEPTH (FEET)	SAMPLE TYPE	ELEVATION (FEET)	GRAPHIC LOG	CLASSIFICATION OF MATERIALS	REMARKS
														150		431		dolomite band; argillaceous @ 149.5-149.6' slightly weathered @ 150.2-150.4' dolomite band @ 150.4-150.6' slightly weathered @ 150.6-150.8'	
										151				151		430		dolomite band @ 151.3-151.5'	Core box #8 starts @ 151.0'
							HQ	30	2.5	0.7	0.0	28	0	152		429		dolomite band @ 151.9-152.1' slightly weathered @ 152.1-152.3'	
														153		428		dolomite band @ 152.9-153.0' slightly weathered @ 153.0-153.2'	
										153.5				154		427			
							HQ	31	2.5	0.5	0.0	20	0	155		426			
										156.0				156		425		dolomite band @ 156.1-156.3'	
							HQ	32	2.5	0.9	0.0	36	0	157		424		dolomite @ 157.2-157.5'	
														158		423		dolomite @ 158.1-158.4'	
										158.5				159		422		dolomite band @ 158.9-159.0'	
							HQ	33	2.5	1.3	0.4	52	16	160		421		160.0 BRECCIA; poorly indurated to indurated claystone matrix; gray; slightly weathered; weak; low hardness; w/clasts of claystone; gray; fresh; strong; hard; (Salina Group - Unit F).	
										161.0				161		420		limestone @ 161.4-161.5'	
							HQ	34	2.5	2.0	0.0	80	0	162		419			
														163		418			
										163.5				164		417			
							HQ	35	2.5	1.2	0.0	48	0	165					

BLACK & VEATCH

BORING LOG

BORING NO. CB-C3

CLIENT	PROJECT	PROJECT NO.
Detroit Edison	Fermi 3 COL Application	147483

PROJECT LOCATION	COORDINATES	GROUND ELEVATION (DATUM)	TOTAL DEPTH
Monroe, MI	N 6341.4' E 4673.8'	581.1 ft (NAVD 88)	273.7 (feet)

SURFACE CONDITIONS	COORDINATE SYSTEM	DATE START	DATE FINISHED
Gravel parking lot	Plant	07/17/07	08/12/07

LOGGED BY	CHECKED BY	APPROVED BY
Bonnie/Ang/Mass	Dogbey/Bonnie	Meyer

SAMPLING							CORING									
SAMPLE TYPE	SAMPLE NUMBER	SET 6 INCHES	2ND 6 INCHES	3RD 6 INCHES	N VALUE	SAMPLE RECOVERY	CORE SIZE	RUN NUMBER	RUN LENGTH	RUN RECOVERY	RQD RECOVERY	PERCENT RECOVERY	RQD	DEPTH (FEET)	ELEVATION (FEET)	GRAPHIC LOG	CLASSIFICATION OF MATERIALS	REMARKS
														165	416		dolomite band; gray @ 165.3-165.5' 90°,J,T,No,No,Pl,SR @ 165.5-165.7' dolomite band; grayish brown @ 165.5-165.7'	
			166.0											166	415		dolomite band @ 166.2-166.4'	
							HQ	36	2.5	1.5	0.0	60	0	167	414		0°,B,T,No,No,Pl,SR @ 166.6' 30°,J,T,No,No,Pl,SR @ 166.6-166.7' dolomite band @ 166.6-166.8'	
														168	413		dolomite band @ 168.0-168.2'	
			168.5											169	412		169.2	
							HQ	37	2.5	1.2	0.0	48	0	170	411		DOLOMITE; (Salina Group - Unit F). 90°,J,T,No,No,Pl,SR @ 169.2-169.4', 170.1-170.3' breccia band @ 169.8-169.9'	
																	170.5	
			171.0											171	410		BRECCIA; poorly indurated claystone matrix; gray; slightly weathered; weak; low hardness; w/clasts of claystone; gray; fresh; strong; hard; (Salina Group - Unit F). dolomite @ 171.6-171.9'	
							HQ	38	2.5	2.0	0.0	80	0	172	409			
														173	408		dolomite band @ 173.1-173.3'	
			173.5											174	407			
							HQ	39	2.5	0.0	0.0	4	0	175	406			
			176.0											176	405		dolomite band @ 176.5-176.7'	
							HQ	40	2.5	1.0	0.5	40	20	177	404			
														178	403			
			178.5											179	402			
							HQ	41	2.5	0.0	0.0	0	0	180				

BLACK & VEATCH

BORING LOG

BORING NO. CB-C3
SHEET 13 OF 19

CLIENT	PROJECT	PROJECT NO.
Detroit Edison	Fermi 3 COL Application	147483

PROJECT LOCATION	COORDINATES	GROUND ELEVATION (DATUM)	TOTAL DEPTH
Monroe, MI	N 6341.4' E 4673.8'	581.1 ft (NAVD 88)	273.7 (feet)

SURFACE CONDITIONS	COORDINATE SYSTEM	DATE START	DATE FINISHED
Gravel parking lot	Plant	07/17/07	08/12/07

LOGGED BY	CHECKED BY	APPROVED BY
TB EJA TB Bonnie/Ang/Mass	EJM TB Dogbey/Bonnie	EJM Meyer

SAMPLING							CORING									
SAMPLE TYPE	SAMPLE NUMBER	SET 6 INCHES	2ND 6 INCHES	3RD 6 INCHES	N VALUE	SAMPLE RECOVERY	CORE SIZE	RUN NUMBER	RUN LENGTH	RUN RECOVERY	RQD RECOVERY	PERCENT RECOVERY	RQD	DEPTH (FEET)	SAMPLE TYPE	ELEVATION (FEET)	GRAPHIC LOG	CLASSIFICATION OF MATERIALS	REMARKS
														180		401			
														181		400			
			181.0															dolomite; gray @ 181.5'	
							HQ	42	2.5	0.3	0.0	12	0	182		399			
														183		398		dolomite; grayish brown @ 183.0'	
			183.5																
							HQ	43	2.5	0.3	0.0	12	0	184		397			
																		dolomite @ 184.7-185.0' 90°,J,T,No,No,Pl,SR @ 184.7-185.0'	
														185		396			
			186.0											186		395			Core box #9 starts @ 186.0'. Claystone possibly washed out during coring.
							HQ	44	2.5	0.5	0.0	20	0					dolomite; brownish gray layers @ 186.5'	
														187		394			
														188		393			
			188.5															0°,B,VN,No,No,Pl,SR @ 188.6'	
							HQ	45	2.5	2.1	1.7	84	68	189		392		189.0 BRECCIA; indurated claystone matrix; gray; moderately strong; moderately hard; w/clasts of claystone; brownish gray; fresh; moderately strong; moderately hard; & dolomite; gray; micritic; fresh; strong; hard; (Salina Group - Unit F). 0°,B,VN,No,No,Pl,SR @ 189.1', 190.3', 190.4', 190.5'	
														190		391			
			191.0											191		390		191.2 BRECCIA; poorly indurated limestone matrix; bluish gray; micritic; strong; hard; w/clasts of claystone; brownish gray; fresh; moderately strong; moderately hard; (Salina Group - Unit F). 20°,J,T,No,No,Pl,SR @ 191.8' 0°,B,VN,No,No,Pl,SR @ 192.1', 192.2', 193.3'	
							HQ	46	2.5	1.0	0.0	40	0	192		389			
														193		388		193.1 DOLOMITE; gray; micritic; fresh; strong; hard; (Salina Group - Unit F).	
			193.5															193.5 BRECCIA; poorly indurated claystone matrix; gray; slightly weathered; weak; low hardness; w/clasts of dolomite; gray; micritic; fresh; moderately strong; moderately hard; (Salina Group - Unit F).	
							HQ	47	2.5	0.6	0.0	24	0	194		387			
														195					

5/13/2008 10:07 AM DTE - Fermi 3 Geotech

BLACK & VEATCH

BORING LOG

BORING NO. CB-C3

CLIENT	PROJECT	PROJECT NO.
Detroit Edison	Fermi 3 COL Application	147483

PROJECT LOCATION	COORDINATES	GROUND ELEVATION (DATUM)	TOTAL DEPTH
Monroe, MI	N 6341.4' E 4673.8'	581.1 ft (NAVD 88)	273.7 (feet)

SURFACE CONDITIONS	COORDINATE SYSTEM	DATE START	DATE FINISHED
Gravel parking lot	Plant	07/17/07	08/12/07

LOGGED BY	CHECKED BY	APPROVED BY
TB Bonnie/Ang/Mass	TB Dogbey/Bonnie	Meyer

SAMPLING: SAMPLE TYPE	SAMPLE NUMBER	SET 6 INCHES	2ND 6 INCHES	3RD 6 INCHES	N VALUE	SAMPLE RECOVERY

CORING: CORE SIZE	RUN NUMBER	RUN LENGTH	RUN RECOVERY	RQD RECOVERY	PERCENT RECOVERY	RQD
HQ	48	2.5	2.4	0.0	96	0
HQ	49	5.0	4.6	2.0	92	40
HQ	50	5.0	4.2	1.0	84	20

DEPTH (FEET)	ELEVATION (FEET)	CLASSIFICATION OF MATERIALS	REMARKS
195	386	195.0	
		DOLOMITE; light gray; micritic; fresh; strong; hard; w/limestone partings; (Salina Group - Unit F).	
196	385	196.0	
		BRECCIA; indurated limestone matrix; bluish gray; micritic; fresh; strong; hard; w/clasts of claystone; pale yellow; fresh; moderately strong; moderately hard; (Salina Group - Unit F).	
197	384	0°,B,T,No,No,Pl,SR @ 196.4', 196.6', 196.8'	
		196.4	
198	383	DOLOMITE; brownish gray; micritic; fresh; strong; hard; (Salina Group - Unit F).	
		80°,J,T,No,No,Pl,SR @ 197.0-198.1'	
		10°,B,T,No,No,Pl,SR @ 197.0', 197.4', 197.5', 197.6'	
		shale partings @ 197.4'	
199	382	grades banded, light gray @ 197.6'	
		198.1	
		BRECCIA; indurated limestone matrix; very dark gray; micritic; fresh; strong; hard; w/clasts of claystone; pale yellow; moderately strong; moderately hard; (Salina Group - Unit F).	
200	381	0°,B,VN,No,No,Pl,SR @ 199.5', 199.9'	
		10°,J,VN,No,No,Pl,SR @ 200.6', 200.7'	
201	380	0°,B,VN,No,No,Pl,SR @ 201.4', 201.7'	
		201.8	
202	379	DOLOMITE; gray; micritic; fresh; strong; hard; (Salina Group - Unit F).	
		0°,B,VN,No,No,Pl,SR @ 202.3'	
203	378	90°,J,VN,Ca,Fi,WA,SR @ 201.8-202.3'	
			Core box #10 starts @ 203.5'.
204	377	0°,B,VN,No,No,Pl,SR @ 204.0', 204.2'	
		black shale seam @ 204.4-204.5'	
		204.7	
205	376	LIMESTONE; very dark gray; micritic; fresh; strong; hard; vuggy; (Salina Group - Unit F).	
		0°,B,VN,No,No,Pl,SR @ 204.7', 205.3'	
206	375		
207	374		
		30°,J,VN,No,No,Pl,SR @ 207.5'	
208	373	0°,B,VN,No,No,Pl,SR @ 208.1', 208.3'	
209	372	0°,B,VN,No,No,Pl,SR @ 209.1', 209.4', 209.8'	
210			

BLACK & VEATCH

BORING LOG

BORING NO. CB-C3

CLIENT	PROJECT	PROJECT NO.
Detroit Edison	Fermi 3 COL Application	147483

PROJECT LOCATION	COORDINATES	GROUND ELEVATION (DATUM)	TOTAL DEPTH
Monroe, MI	N 6341.4' E 4673.8'	581.1 ft (NAVD 88)	273.7 (feet)

SURFACE CONDITIONS	COORDINATE SYSTEM	DATE START	DATE FINISHED
Gravel parking lot	Plant	07/17/07	08/12/07

LOGGED BY	CHECKED BY	APPROVED BY
TB EM TB for Bonnie/Ang/Mass	TB for EM for Dogbey/Bonnie	EM Meyer

SAMPLING: SAMPLE TYPE	SAMPLE NUMBER	SET 6 INCHES	2ND 6 INCHES	3RD 6 INCHES	N VALUE	SAMPLE RECOVERY	CORING: CORE SIZE	RUN NUMBER	RUN LENGTH	RUN RECOVERY	RQD RECOVERY	PERCENT RECOVERY	RQD	DEPTH (FEET)	SAMPLE TYPE	ELEVATION (FEET)	GRAPHIC LOG	CLASSIFICATION OF MATERIALS	REMARKS
							HQ	51	5.0	4.5	2.4	90	48	210		371		0°,B,VN,No,No,Pl,SR @ 210.0', 210.1'	
														211		370		fractured @ 211.0-212.0' 0°,B,VN,No,No,Pl,SR @ 211.0'	
														212		369			
														213		368		0°,B,VN,Ca,Fi,Pl,SR @ 212.5', 212.55', 212.65', 213.0' 90°,J,VN,Ca,Fi,Pl,SR @ 212.6-213.5'	
										213.5				214		367			
																		214.3	
							HQ	52	5.0	4.6	2.5	92	50	215		366		DOLOMITE; light brownish gray; micritic; fresh; strong; hard; (Salina Group - Unit F) fractured; grading from open at top to filled w/calcite (healed) at bottom; @ 214.6-215.8'	
														216		365		shale parting @ 215.8' some vugs filled w/claystone @ 216.0', 217.0'	
																		216.2	
														217		364		LIMESTONE; very dark gray; micritic; fresh; strong; hard; vuggy; (Salina Group - Unit F). 80°,J,T,Ca,Fi,Pl,SR @ 216.9-218.5'	
														218		363		0°,B,T,Ca,Fi,Pl,SR @ 216.5', 216.7', 217.7' 218.0'	
										218.5				219		362		dolomite; light yellowish brown @ 218.7-219.1' 80°,J,VN,Ca,Fi,Pl @ 218.7-218.9', 218.95-219.1'	Core box #11 starts @ 218.5'.
							HQ	53	3.0	2.3	1.5	77	50	220		361		shale partings @ 219.5' 0°,B,VN,No,No,Pl,SR @ 220.0'	
																		220.5	
														221		360		BRECCIA; indurated limestone matrix; very dark gray; w/clasts of dolomite; light brownish gray; (Salina Group - Unit F). 45°,J,VN,Ca,Fi,Pl,SR @ 220.5' 90°,J,VN,Ca,Fi,Pl,SR @ 221.0-221.4'	
										221.5								221.5	
							HQ	54	2.0	1.5	0.7	75	35	222		359		LIMESTONE; very dark gray; micritic; fresh; strong; hard; vuggy; (Salina Group - Unit F). 0°,B,T,Ca,Sp,Pl,SR @ 222.3', 224.4' 0°,B,VN,Ca,Fi,Pl,SR @ 222.7', 222.9', 223.1', 223.3' fragmented @ 222.9-223.1'	
														223		358			
										223.5				224		357			
																		30°,J,T,Ca,Fi,Pl,SR @ 224.35-224.4	
														225				60°,J,VN,Ca,Fi,Pl,R @ 224.7-225.0'	

BLACK & VEATCH

BORING LOG

BORING NO. CB-C3

CLIENT	PROJECT	PROJECT NO.
Detroit Edison	Fermi 3 COL Application	147483

PROJECT LOCATION	COORDINATES	GROUND ELEVATION (DATUM)	TOTAL DEPTH
Monroe, MI	N 6341.4' E 4673.8'	581.1 ft (NAVD 88)	273.7 (feet)

SURFACE CONDITIONS	COORDINATE SYSTEM	DATE START	DATE FINISHED
Gravel parking lot	Plant	07/17/07	08/12/07

LOGGED BY	CHECKED BY	APPROVED BY
TB Bonnie/Ang/Mass ECA TB for	EM for Dogbey/Bonnie TB	EM Meyer

SAMPLING: SAMPLE TYPE, SAMPLE NUMBER, SET 6 INCHES, 2ND 6 INCHES, 3RD 6 INCHES, N VALUE, SAMPLE RECOVERY

CORING: CORE SIZE, RUN NUMBER, RUN LENGTH, RUN RECOVERY, RQD RECOVERY, PERCENT RECOVERY, RQD

SAMPLE TYPE	SAMPLE NUMBER	SET 6 INCHES	2ND 6 INCHES	3RD 6 INCHES	N VALUE	SAMPLE RECOVERY	DEPTH (FEET)	ELEVATION (FEET)	CLASSIFICATION OF MATERIALS	REMARKS
							225	356	10°,J,T,Ca,Fi,Pl,SR @ 224.9-225.0'	
									fractured @ 225.5-226.0'	
HQ	55	5.0	1.9	0.0	38	0	226	355		
							227	354		
							228	353		
			228.5						fractured @ 228.5-229.0	
							229	352		
							230	351	0°,B,VN,Ca,Sp,Pl,SR @ 230.1', 230.25'	
HQ	56	5.0	2.9	0.4	58	8	231	350	0°,B,VN,Ca,Sp,Pl,SR @ 230.8', 230.95'	
									231.7	
							232	349	DOLOMITE; gray; micritic; fresh; strong; hard; (Salina Group - Unit F). 0°,B,VN,Ca,Sp,Pl,SR @ 231.85', 232.3', 232.7', 233.2'	
							233	348	90°,J,T,Ca,Fi,Sp,SR @ 231.9-232.25', 233.1-233.5' 45°,J,T,Ca,Fi,Sp,SR @ 232.3-232.45' fractured @ 232.3-232.5' fractured @ 232.7-232.9'	
			233.5							
							234	347		
							235	346		
									235.8	
HQ	57	5.0	2.9	0.0	58	0	236	345	CLAYSTONE; gray; micritic; highly weathered; very weak; low hardness; (Salina Group - Unit F).	
									236.3	
							237	344	LIMESTONE; very dark gray; micritic; fresh; strong; hard; pitted; (Salina Group - Unit F). 0°,B,T,No,No,Pl,SR @ 236.7', 237.25', 237.4', 237.5', 237.75', 238.0', 238.1' 40°,J,T,No,No,Pl,SR @ 237.6-237.7'	
							238	343	dolomite; gray @ 238.1-238.5'	
			238.5							Water level @ 25.3' prior to drilling on 08/12/07.
							239	342	0°,B,T,No,No,Pl,SR @ 239.3', 239.6', 239.8', 240.4', 240.7'	
							240			

BLACK & VEATCH

BORING LOG

BORING NO. CB-C3
SHEET 17 OF 19

CLIENT	PROJECT	PROJECT NO.
Detroit Edison	Fermi 3 COL Application	147483

PROJECT LOCATION	COORDINATES	GROUND ELEVATION (DATUM)	TOTAL DEPTH
Monroe, MI	N 6341.4' E 4673.8'	581.1 ft (NAVD 88)	273.7 (feet)

SURFACE CONDITIONS	COORDINATE SYSTEM	DATE START	DATE FINISHED
Gravel parking lot	Plant	07/17/07	08/12/07

LOGGED BY	CHECKED BY	APPROVED BY
TB ECA TB for Bonnie/Ang/Mass	EM for Dogbey/Bonnie TB	EM Meyer

SAMPLING: SAMPLE TYPE	SAMPLE NUMBER	SET 6 INCHES	2ND 6 INCHES	3RD 6 INCHES	N VALUE	SAMPLE RECOVERY

CORING: CORE SIZE	RUN NUMBER	RUN LENGTH	RUN RECOVERY	RQD RECOVERY	PERCENT RECOVERY	RQD
HQ	58	5.0	4.5	3.3	90	66
HQ	59	5.0	4.9	2.75	98	55
HQ	60	5.0	4.3	2.75	86	55

DEPTH (FEET)	SAMPLE TYPE	ELEVATION (FEET)	GRAPHIC LOG	CLASSIFICATION OF MATERIALS	REMARKS
240		341		dolomite band @ 239.5-239.6'	Core box #12 starts @ 240.7'.
				239.6	
				BRECCIA; indurated limestone matrix; very dark gray; micritic; fresh; strong; hard; w/clasts of dolomite; gray; micritic; fresh; strong; hard; 5% vuggy; (Salina Group - Unit F).	
241		340		241.0	
				DOLOMITE; (Salina Group - Unit F). 80°,J,VN,No,No,PI,SR @ 241.1-241.3' 0°,B,T,No,No,PI,SR @ 241.45'	
242		339		241.5	
				BRECCIA; indurated limestone matrix; very dark gray; micritic; fresh; strong; hard; w/clasts of dolomite; gray; micritic; fresh; strong; hard; 5% vuggy; (Salina Group - Unit F). dolomite band (large clasts) @ 242.5-242.6' 0°,B,T,No,No,PI,SR @ 242.65' 0°,B,VN,No,No,PI,SR @ 243.8', 244.1', 244.7', 245.0', 245.2' dolomite clasts grade very pale brown @ 244.4'	
243		338			
244		337			
245		336		245.2	
				DOLOMITE; very pale brown; micritic; fresh; strong; hard; w/shale partings; (Salina Group - Unit F). 0°,B,VN,No,PI,SR @ 245.4', 245.5' limestone @ 246.2-246.6'	
246		335		246.6	
				DOLOMITE; very pale brown; micritic; fresh; strong; hard; w/shale partings & fossils; (Salina Group - Unit E). shale partings @ 246.6' 0°,B,VN,No,No,PI,SR @ 246.7', 246.8', 247.0', 247.5' shale partings - 0°,B,VN,Sp,PI,SR @ 247.2', 247.3', 247.9' 90°,J,VN,No,No,PI,SR @ 248.3'-248.5', 249.3-249.55' 0°,B,T,No,No,PI,SR @ 248.6', 248.7', 249.2' fractured @ 248.7-249.0'; 249.1-249.3' 20°,J,T,No,No,PI,SR @ 249.0-249.1' 0°,B,T,No,No,PI,SR @ 249.55', 249.6', 250.2', 250.55'	
247		334			
248		333			
249		332			
250		331			
251		330		0°,B,T,No,No,PI,SR @ 250.9', 251.1'	
252		329		0°,B,T,No,No,PI,SR @ 252.2'	
253		328			
254		327		0°,B,VN,No,No,PI,SR @ 254.1', 254.65'	
255					

5/13/2008 10:07 AM DTE - Fermi 3 Geotech

BLACK & VEATCH

BORING LOG

BORING NO. CB-C3
SHEET 18 OF 19

CLIENT	PROJECT	PROJECT NO.
Detroit Edison	Fermi 3 COL Application	147483

PROJECT LOCATION	COORDINATES	GROUND ELEVATION (DATUM)	TOTAL DEPTH
Monroe, MI	N 6341.4' E 4673.8'	581.1 ft (NAVD 88)	273.7 (feet)

SURFACE CONDITIONS	COORDINATE SYSTEM	DATE START	DATE FINISHED
Gravel parking lot	Plant	07/17/07	08/12/07

LOGGED BY	CHECKED BY	APPROVED BY
TB Bonnie/Ang/Mass	Dogbey/Bonnie TB	Meyer

SAMPLING							CORING									
SAMPLE TYPE	SAMPLE NUMBER	SET 6 INCHES	2ND 6 INCHES	3RD 6 INCHES	N VALUE	SAMPLE RECOVERY	CORE SIZE	RUN NUMBER	RUN LENGTH	RUN RECOVERY	RQD RECOVERY	PERCENT RECOVERY	RQD	DEPTH (FEET)	SAMPLE TYPE	ELEVATION (FEET)	GRAPHIC LOG	CLASSIFICATION OF MATERIALS	REMARKS
							HQ	61	5.0	4.8	4.4	96	88	255		326		shale parting @ 255.45' 0°,B,T,No,No,Pl,SR @ 255.6', 255.8'	Core box #13 starts @ 255.6'.
														256		325			
														257		324		60°,J,T,No,No,Pl,SR @ 257.3-257.7'	
														258		323			
										258.5				259		322			
														260		321			
							HQ	62	5.0	4.2	2.75	84	55	261		320		260.3 DOLOMITE; very pale brown & grayish brown; micritic; slightly weathered; gravel-sized fragments; w/shale; possible hydrocarbon odor; (Salina Group - Unit E). 260.6 DOLOMITE; gray; micritic; fresh; strong; hard; w/ shale parting; (Salina Group - Unit E). grayish brown @ 260.6-260.9' shale partings - 0°,B,VN,Sp,Pl,SR @ 260.7', 260.9', 261.15', 261.4', 261.6', 261.8', 262.3' shale parting @ 261.9'	
														262		319			
														263		318			
										263.5				264		317		0°,B,VN,gypsum,Fi,Pl,S @ 263.4' 0°,B,T,No,No,Pl,SR @ 263.85', 263.95' 264.0 DOLOMITE; grayish brown; micritic; fresh; strong; hard; w/gypsum nodules, veins, & bands; shale partings; (Salina Group - Unit E). gypsum nodules @ 264.5' shale parting @ 265.3' gypsum @ 265.4-266.0'	
														265		316			
							HQ	63	5.0	5.0	3.7	100	74	266		315		0°,B,VN,No,No,Pl,SR @ 265.6', 266.8', 267.15' grades gray @ 266.1'	
														267		314		gypsum band @ 266.7-267.6'	
														268		313		grades grayish brown @ 267.6'	
										268.5				269		312		0°,B,T,No,No,Pl,SR @ 268.1', 268.5', 269.3' grades dark grayish brown @ 268.5'	
														270				269.3 DOLOMITE; light gray; micritic; fresh; strong; hard; (Salina Group - Unit E).	

BLACK & VEATCH

BORING LOG

BORING NO. CB-C3

CLIENT	PROJECT	PROJECT NO.
Detroit Edison	Fermi 3 COL Application	147483

PROJECT LOCATION	COORDINATES	GROUND ELEVATION (DATUM)	TOTAL DEPTH
Monroe, MI	N 6341.4' E 4673.8'	581.1 ft (NAVD 88)	273.7 (feet)

SURFACE CONDITIONS	COORDINATE SYSTEM	DATE START	DATE FINISHED
Gravel parking lot	Plant	07/17/07	08/12/07

LOGGED BY	CHECKED BY	APPROVED BY
Bonnie/Ang/Mass	Dogbey/Bonnie	Meyer

SAMPLING							CORING									
SAMPLE TYPE	SAMPLE NUMBER	SET 6 INCHES	2ND 6 INCHES	3RD 6 INCHES	N VALUE	SAMPLE RECOVERY	CORE SIZE	RUN NUMBER	RUN LENGTH	RUN RECOVERY	RQD RECOVERY	PERCENT RECOVERY	RQD	DEPTH (FEET)	SAMPLE TYPE	ELEVATION (FEET)	GRAPHIC LOG	CLASSIFICATION OF MATERIALS	REMARKS
														270		311		0°,B,T,No,No,Pl,SR @ 269.6', 269.7' grades gray @ 270.2' 0°,B,T,No,No,Pl,SR @ 270.3' 0°,B,T,No,No,Pl,SR @ 270.85', 271.6'	Core box #14 starts @ 270.5'.
							HQ	64	5.0	5.0	4.4	100	88	271		310			
														271.6					
														272		309		DOLOMITE; light brownish gray; micritic; fresh; strong; hard; w/gypsum bands & nodules; (Salina Group - Unit E). grades gray @ 272.1' 0°,B,T,No,No,Pl,SR @ 272.1', 272.7' grades grayish brown @ 272.8' gypsum bands & nodules @ 272.9-273.4'	
														273		308			
														274		307			Bottom of boring @ 273.7'. Water level @ 24.5' @ completion of drilling. Boring backfilled w/ bentonite chips on 09/21/07.
														275		306			
														276		305			
														277		304			
														278		303			
														279		302			
														280		301			
														281		300			
														282		299			
														283		298			
														284		297			
														285					

BLACK & VEATCH

BORING LOG

BORING NO. CB-C4

SHEET 1 OF 10

CLIENT	PROJECT	PROJECT NO.
Detroit Edison	Fermi 3 COL Application	147483

PROJECT LOCATION	COORDINATES	GROUND ELEVATION (DATUM)	TOTAL DEPTH
Monroe, MI	N 6230.3' E 4663.3'	580.8 ft (NAVD 88)	133.5 (feet)

SURFACE CONDITIONS	COORDINATE SYSTEM	DATE START	DATE FINISHED
Gravel parking lot	Plant	07/17/07	08/08/07

LOGGED BY	CHECKED BY	APPROVED BY
TB ECA TB for Bonnie/Ang/Mass	SM for TB Dogbey/Bonnie	Meyer EM

SAMPLING							CORING									
SAMPLE TYPE	SAMPLE NUMBER	SET 6 INCHES	2ND 6 INCHES	3RD 6 INCHES	N VALUE	SAMPLE RECOVERY	CORE SIZE	RUN NUMBER	RUN LENGTH	RUN RECOVERY	RQD RECOVERY	PERCENT RECOVERY	RQD	DEPTH (FEET)	SAMPLE TYPE	ELEVATION (FEET)	GRAPHIC LOG	CLASSIFICATION OF MATERIALS	REMARKS
														0		580		COBBLES with Gravel & Sand - About 65% angular to elongated, very hard cobbles w/max. size 12"; 20% fine to coarse, angular, hard gravel w/max. size 3"; 15% fine to coarse, angular, hard sand; about 5% fines; gray; dry; homogeneous; (Fill).	Boring advanced w/vacuum excavation.
														1					
														2		579			Below 2.0' continued w/4" ID sonic continuous sampler w/ nominal 6" temporary steel casing advanced w/sampler.
S	1		2.0			NR								3		578			
														4		577			
														5		576			
														6		575			
			6.5											7		574			
														8		573			
														9		572			
														10		571			
S	2					NR								11		570			Discrete sample S02A collected @ 10.5-11.5'.
														12		569			
														13		568		13.0	
														14		567		Lean CLAY (CL) - About 100% LL=45, PL=16, no dilatancy, high dry strength fines; olive gray; firm; moist; no reaction w/HCl; homogeneous	Discrete sample S02B collected @ 13.0-14.0'. Set nominal 6" temporary steel casing to 13.5'. Hole was
			14.0											15		566		14.5 Lean CLAY (CL) - About 87 to 88%, LL=32, PL=16,	

4/7/2008 6:28 PM DTE - Fermi 3 Geotech

BLACK & VEATCH

BORING LOG

BORING NO. CB-C4

CLIENT	PROJECT	PROJECT NO.
Detroit Edison	Fermi 3 COL Application	147483

PROJECT LOCATION	COORDINATES	GROUND ELEVATION (DATUM)	TOTAL DEPTH
Monroe, MI	N 6230.3' E 4663.3'	580.8 ft (NAVD 88)	133.5 (feet)

SURFACE CONDITIONS	COORDINATE SYSTEM	DATE START	DATE FINISHED
Gravel parking lot	Plant	07/17/07	08/08/07

LOGGED BY	CHECKED BY	APPROVED BY
TB ECA TB for Bonnie/Ang/Mass	EM for TB for TOC 4/11 Dogbey/Bonnie	EM Meyer

SAMPLING							CORING							DEPTH (FEET)	SAMPLE TYPE	ELEVATION (FEET)	GRAPHIC LOG	CLASSIFICATION OF MATERIALS	REMARKS
SAMPLE TYPE	SAMPLE NUMBER	SET 6 INCHES	2ND 6 INCHES	3RD 6 INCHES	N VALUE	SAMPLE RECOVERY	CORE SIZE	RUN NUMBER	RUN LENGTH	RUN RECOVERY	RQD RECOVERY	PERCENT RECOVERY	RQD						
														15					opened to 14.0'. Below 14.0' continued w/ rotary wash boring using NWJ rods using bentonite mud as drilling fluid. SPT performed w/D-50 automatic hammer. Water level @ 11.0' prior to drilling on 07/19/07.
TW	3												1.4	16		565		no dilatancy fines; about 3 to 9% sand; about 3 to 10% gravel; brown; hard; moist; homogeneous; (Glacial Till).	
														17		564			
														18		563		grades about 92% LL=39, PL=17 fines; about 7% sand; about 1% gravel w/max. size 3/4"; light olive brown	
TW	4												1.7	19		562			
														20		561			PP = 3.75 TSF @ 17.0'
																		grades w/trace fine to coarse, subrounded sand; olive brown	PP = 3.3-4.5 TSF @ 19.5'.
TW	5												1.9	21		560			
														22		559			PP = 4.0 TSF @ 22.0'.
														23		558		grades w/trace coarse, subrounded gravel w/max. size 1½", fractured with 1 hammer blow; trace coarse, subrounded to subangular sand; dark gray; hard; moist	
TW	6												1.4	24		557			
														25		556			PP > 4.5 TSF @ 24.5'.
																		24.8	
SPT	7	19	23	25	48	1.4								26		555		Sandy Lean CLAY (CL) - About 57% LL=18, PL=11, no dilatancy fines; about 37% fine to coarse, subrounded to subangular sand; about 6% fine to coarse, subangular to subrounded, hard gravel w/ max. size 3/4"; dark gray; very hard; moist; (Glacial Till).	PP > 4.5 TSF @ 26.0'.
														27		554			
SPT	8	9	50/5"		50+	0.9								28		553			
			28.5															28.5	
S	9					1.5								29		552		DOLOMITE; crystalline; light brownish gray; micritic; fresh; strong; hard; (Bass Islands Group).	Below 28.5' continued w/4" ID sonic continuous sampler w/
														30		551			

BLACK & VEATCH

BORING LOG

BORING NO. CB-C4

CLIENT	PROJECT	PROJECT NO.
Detroit Edison	Fermi 3 COL Application	147483

PROJECT LOCATION	COORDINATES	GROUND ELEVATION (DATUM)	TOTAL DEPTH
Monroe, MI	N 6230.3' E 4663.3'	580.8 ft (NAVD 88)	133.5 (feet)

SURFACE CONDITIONS	COORDINATE SYSTEM	DATE START	DATE FINISHED
Gravel parking lot	Plant	07/17/07	08/08/07

LOGGED BY	CHECKED BY	APPROVED BY
TB ELA TB for Bonnie/Ang/Mass	ZM for TB Dogbey/Bonnie	FM Meyer

SAMPLE TYPE	SAMPLE NUMBER	SET 6 INCHES	2ND 6 INCHES	3RD 6 INCHES	N VALUE	SAMPLE RECOVERY	DEPTH (FEET)	ELEVATION (FEET)	CLASSIFICATION OF MATERIALS	REMARKS
							30			nominal 6" temporary steel casing advanced w/sampler. Sonic core stored in box labeled SC1. Set nominal 6" temporary steel casing to 30.4'. Boring open to 30.5'. Below 30.5', continued w/ triple tube wire line core barrel w/diamond bit using water as drilling fluid. Core box #1 starts @ 30.5'. Water level @ 14.5' prior to drilling on 08/02/07.
			30.5						30.5	
HQ	1	3.0	3.0	0.5	100	17	31, 32, 33	550, 549, 548	DOLOMITE; argillaceous; dark gray; micritic; fresh; strong; hard; w/stylolites; (Bass Islands Group). 90°,J,Ca,Pa,WA,SR @ 30.5-31.5' 70°,J,Cl,Pa,Pl,Slk @ 30.8-31.1' 90°,J,Cl,Pa,WA,SR @ 31.1-32.4' 0°,B,UK,Fi,Pl,SR @ 31.6', 31.8', 32.1', 32.8', 33.3' highly fractured @ 32.4-32.7' 90°,J,Ca,Pa,Pl,SR @ 32.4-32.7' (2 joints) 90°,J,Cl,Pa,Pl,SR @ 32.8-33.4' 90°,T,No,No,Pl,SR @ 32.9-33.5'	
			33.5						33.5	
HQ	2	5.0	5.0	1.2	100	24	34, 35, 36, 37, 38	547, 546, 545, 544, 543	DOLOMITE; argillaceous; grayish brown & light brownish gray, banded; micritic; fresh; strong; very hard; w/thin shale partings & closely spaced stylolites; (Bass Islands Group). 90°,J,Ca,Pa,Pl,SR @ 34.5-34.9' highly fractured @ 34.9-35.9' 90°,J,No,No,Pl,SR @ 35.8-36.4' (2 joints)	
									36.1	
			38.5						DOLOMITE; argillaceous; grayish brown; very fine grained (crystalline); fresh; strong; very hard; w/ stylolites; trace shale partings; (Bass Islands Group). 80°,J,T,No,No,Pl @ 36.5-36.8' 90°,J,No,No,Pl,SR @ 36.8-37.0' 90°,J,pyrite/Ca,Pa,WA,SR @ 37.5-38.0' 60°,J,Ca,Pa,Pl,SR @ 38.0-38.2' 70°,J,Cl,Pa,Pl,SR @ 38.3-38.5' gray @ 38.5' 90°,J,T,Cl,Pa,WA,SR @ 38.5-39.6' shale partings - 0°,B,Pl,SR @ 39.0', 39.3', 39.6'	
HQ	3	5.0	5.0	2.3	100	46	39, 40, 41, 42, 43	542, 541, 540, 539, 538	highly fractured @ 40.0-40.2' 90°,J,VN,No,No,Pl @ 40.2-40.5' (2 joints) 90°,J,No,No,WA,SR @ 40.7-41.0' 20°,J,No,No,Pl,SR @ 41.7', 41.8'	
									41.9	
									DOLOMITE; gray; pitted (pits<.02"); very fine grained (crystalline); slightly weathered; very strong; hard; (Bass Islands Group).	
			43.5				44, 45	537, 536		Core box #2 starts @ 43.5'.
									44.7	

4/7/2008 6:28 PM DTE - Fermi 3 Geotech

BLACK & VEATCH

BORING LOG

BORING NO. CB-C4

CLIENT	PROJECT	PROJECT NO.
Detroit Edison	Fermi 3 COL Application	147483

PROJECT LOCATION	COORDINATES	GROUND ELEVATION (DATUM)	TOTAL DEPTH
Monroe, MI	N 6230.3' E 4663.3'	580.8 ft (NAVD 88)	133.5 (feet)

SURFACE CONDITIONS	COORDINATE SYSTEM	DATE START	DATE FINISHED
Gravel parking lot	Plant	07/17/07	08/08/07

LOGGED BY	CHECKED BY	APPROVED BY
TB ECA TB for Bonnie/Ang/Mass	Fm for TB Dogbey/Bonnie	Fm Meyer

SAMPLING: SAMPLE TYPE | SAMPLE NUMBER | SET 6 INCHES | 2ND 6 INCHES | 3RD 6 INCHES | N VALUE | SAMPLE RECOVERY

CORING: CORE SIZE | RUN NUMBER | RUN LENGTH | RUN RECOVERY | RQD RECOVERY | PERCENT RECOVERY | RQD

SAMPLE TYPE	SAMPLE NUMBER	SET 6 INCHES	2ND 6 INCHES	3RD 6 INCHES	N VALUE	SAMPLE RECOVERY	DEPTH (FEET)	ELEVATION (FEET)	CLASSIFICATION OF MATERIALS	REMARKS
HQ	4	5.0	4.7	1.6	94	32	45–48	535, 534, 533	DOLOMITE; dark grayish brown; micritic; fresh; strong; very hard; vuggy/pitted, pits/vugs (0.05-1.2"); larger vugs filled w/calcite and anhydrite; (Bass Islands Group). 80°,J,No,No,Pl,R @ 45.0-45.4' 10°,J,No,No,Pl,R @ 45.1' 50°,J,No,No,Pl,R @ 45.3-45.5' 20°,J,UK,Fi,Pl,R @ 46.1-46.2' highly fractured @ 46.5-46.8' grades light brownish gray @ 46.8-53.7' 90°,J,Ca,Pa,Pl,SR @ 46.9-47.6' 75°,J,Ca,Pa,Pl,SR @ 47.5-48.0' 60°,J,Ca,Pa,Pl,SR @ 47.9-48.1'	
HQ	5	5.0	48.5 5.0	5.0	100	100	49–53	532, 531, 530, 529, 528	30°,J,anhydrite,Fi,Pl,SR @ 49.0-49.3'; joint contains large anhydrite crystals (0.4-1.2"); anhydrite also fills the surrounding vugs 0°,J,UK,Fi,Pl,SR @ 50.6' 30°,J,No,No,Pl,R @ 51.7-51.8' 30°,J,anhydrite,Fi,Pl,SR @ 52.8-52.9', 53.6-53.7' brecciated, healed; grayish brown @ 53.6' 0°,J,anhydrite,Fi,Pl,SR @ 53.7'	
HQ	6	5.0	53.5 5.0	3.0	100	60	54–56	527, 526, 525	53.9 DOLOMITE; light brownish gray; micritic; fresh; strong; hard; some brecciation, healed, up to 1.5" clasts; (Bass Islands Group). 30°,J,T,No,No,Ir,R @ 54.3-54.4', 57.5-57.7' 50°,J,T,No,No,Pl,SR @ 55.3-55.5' grades light yellowish brown @ 55.5' 56.0	Water level @ 21.0' prior to drilling on 08/07/07.
							57–58	524, 523	DOLOMITE; dark grayish brown; micritic; fresh; strong; hard; (Bass Islands Group). fractured @ 56.0-56.5 90°,J,T,No,No,Pl,SR @ 56.0-56.5', 56.5-56.9' 0°,B,T,No,No,Pl,SR @ 56.0', 56.1', 56.4', 56.5' 56.6 DOLOMITE; light gray & dark gray (mottled); micritic; fresh; strong; hard; (Bass Islands Group). shale; very dark gray @ 56.9-57.1' 57.1	Core box #3 starts @ 56.5'. No drilling fluid return @ 56.5'.
			58.5				59–60	522, 521	DOLOMITE; oolitic; light yellowish brown; very fine grained; fresh; strong; hard; (Bass Islands Group). 20°,J,T,No,No,Pl,SR @ 59.5-59.6'	

4/7/2008 6:28 PM DTE - Fermi 3 Geotech

BLACK & VEATCH

BORING LOG

BORING NO. CB-C4

SHEET 5 OF 10

CLIENT	PROJECT	PROJECT NO.
Detroit Edison	Fermi 3 COL Application	147483

PROJECT LOCATION	COORDINATES	GROUND ELEVATION (DATUM)	TOTAL DEPTH
Monroe, MI	N 6230.3' E 4663.3'	580.8 ft (NAVD 88)	133.5 (feet)

SURFACE CONDITIONS	COORDINATE SYSTEM	DATE START	DATE FINISHED
Gravel parking lot	Plant	07/17/07	08/08/07

LOGGED BY	CHECKED BY	APPROVED BY
TB Bonnie/Ang/Mass	Dogbey/Bonnie	Meyer

SAMPLING							CORING									
SAMPLE TYPE	SAMPLE NUMBER	SET 6 INCHES	2ND 6 INCHES	3RD 6 INCHES	N VALUE	SAMPLE RECOVERY	CORE SIZE	RUN NUMBER	RUN LENGTH	RUN RECOVERY	RQD RECOVERY	PERCENT RECOVERY	RQD	DEPTH (FEET)	SAMPLE TYPE	ELEVATION (FEET)	GRAPHIC LOG	CLASSIFICATION OF MATERIALS	REMARKS
							HQ	7	3.5	3.3	2.5	94	71	60					
														61		520		60.9 DOLOMITE; light gray; micritic; fresh; strong; hard; banded; w/stylolites; (Bass Islands Group). some brecciation, healed @ 60.9-61.6' 10°,J,T,No,No,WA,SR @ 61.0'	
														62		519		shale band; dark gray @ 61.3-61.5', 61.6-61.7' 0°,B,T,No,No,Pl,SR @ 61.5', 61.8', 62.2',62.5', 62.9', 63.0'	
			62.0				HQ	8	1.5	1.5	0.0	100	0	63		518		90°,J,T,No,No,Pl,SR @ 61.8-62.0', 62.0-62.5' shale partings - 0°,B,VN,Pl,SR @ 62.0',63.3' laminar bedding; w/shale parting @ 62.2-62.6'	
			63.5											64		517		grades dark gray @ 62.5' grades light gray @ 62.6' some brecciation, healed @ 62.6-62.9'	
																		grades laminar bedding w/shale partings @ 62.9' shale partings - 0°,B,VN,Pl,SR @ 63.6',63.7',63.8', 64.9'	
														65		516		shale @ 65.3-65.4' shale partings - 0°,B,VN,Pl,SR @ 65.3',65.9'	
							HQ	9	5.0	5.0	2.5	100	50	66		515		66.4 DOLOMITE; light brownish gray; micritic; fresh; strong; hard; w/shale parting; (Bass Islands Group). shale partings - 0°,B,VN,Pl,SR @ 66.4',67.0',67.2', 67.3',67.8',68.0'	
														67		514		shale parting; weathered @ 66.6'	
														68		513		breccia, healed @ 66.6-66.7' 90°,J,T,No,No,Pl,SR @ 67.0-67.2' 80°,J,T,No,No,Pl,SR @ 67.8-68.1'	
			68.5											69		512		70°,J,VN,No,No,Pl,SR @ 68.8-69.1'	Core box #4 starts @ 68.5'.
														70		511		40°,J,VN,anhydrite,Fi,Pl,SR @ 69.7-70.1	
							HQ	10	5.0	5.0	4.3	100	86	71		510			
														72		509			
														73		508		pitted @ 73.0-74.0'	
			73.5											74		507			
																		pitted & vuggy @ 74.4-75.1' 50°,J,T,No,No,Pl,SR @ 74.7-75.0'	
														75		506			

BLACK & VEATCH

BORING LOG

BORING NO. CB-C4

CLIENT	PROJECT	PROJECT NO.
Detroit Edison	Fermi 3 COL Application	147483

PROJECT LOCATION	COORDINATES	GROUND ELEVATION (DATUM)	TOTAL DEPTH
Monroe, MI	N 6230.3' E 4663.3'	580.8 ft (NAVD 88)	133.5 (feet)

SURFACE CONDITIONS	COORDINATE SYSTEM	DATE START	DATE FINISHED
Gravel parking lot	Plant	07/17/07	08/08/07

LOGGED BY	CHECKED BY	APPROVED BY
Bonnie/Ang/Mass	Dogbey/Bonnie	Meyer

SAMPLING							CORING									
SAMPLE TYPE	SAMPLE NUMBER	SET 6 INCHES	2ND 6 INCHES	3RD 6 INCHES	N VALUE	SAMPLE RECOVERY	CORE SIZE	RUN NUMBER	RUN LENGTH	RUN RECOVERY	RQD RECOVERY	PERCENT RECOVERY	RQD	DEPTH (FEET)	SAMPLE TYPE	ELEVATION (FEET)	GRAPHIC LOG	CLASSIFICATION OF MATERIALS	REMARKS
														75					
							HQ	11	5.0	5.0	4.7	100	94	76		505		breccia, healed, thin bedded @ 76.5-76.9' 45°,J,T,No,No,Ir,R @ 76.8-77.0', 77.2-77.4'	
														77		504			
														78		503		77.8 BRECCIA; healed; (Bass Islands Group) 80°,J,T,No,No,Pl,SR @ 78.0-78.2' 78.3	
										78.5				79		502		DOLOMITE; light brownish gray; micritic; fresh; strong; hard; w/shale parting; (Bass Islands Group). 0°,B,VN,No,No,Pl,SR @ 79.4'	
							HQ	12	5.0	5.0	3.3	100	66	80		501		dolomite; argillaceous; grayish brown; micritic; fresh; strong; hard @ 79.8-80.0' 30°,J,VN,UK,Fi,Pl,SR @ 79.95-80.1' shale partings - 0°,B,VN,Pl,SR @ 80.0',80.9'	
														81		500			
														82		499		0°,B,T,No,No,Pl,SR @ 81.5', 82.3' 65°,J,T,No,No,Pl,SR @ 81.5-81.95' 90°,J,T,No,No,WA,R @ 82.1-82.4' shale partings - 0°,B,VN,Pl,SR @ 82.5',82.9'	Core box #5 starts @ 81.5'.
														83		498			
										83.5				84		497		10°,B,T,No,No,Pl,SR @ 83.2' 0°,J,VN,No,No,Ir,SR @ 83.4' 83.7 DOLOMITE; argillaceous; dark gray & light gray, mottled; micritic; fresh; strong; hard; (Bass Islands Group). 84.0	Water level @ 22.0' prior to drilling on 08/08/07.
														85		496		SHALE; (Bass Islands Group). 84.3 brecciated, healed @ 84.3-84.8'	
							HQ	13	5.0	5.0	3.4	100	68	86		495		DOLOMITE; argillaceous; dark gray & light gray, mottled; micritic; fresh; strong; hard; (Bass Islands Group). 0°,B,T,No,No,Pl,SR @ 84.4', 84.9'	
														87		494		84.9 DOLOMITE; grayish brown; micritic; fresh; strong; hard; (Bass Islands Group). 70°,J,VN,anhydrite,Sp,Pl,R @ 84.9-85.3', 86.0-86.3' banded @ 84.9-86.0' shale band @ 85.0-85.1'	
														88		493		shale partings - 0°,B,VN,Pl @ 85.5 anhydrite filled vugs @ 86.0-86.5'	
										88.5				89		492		85°,J,T,UK,Sp,Pl,SR @ 87.0-88.5' 90°,J,T,No,No,Pl,SR @ 88.5-89.4' 0°,B,J,T,No,No,Pl,SR @ 88.7', 89.1', 89.3' grades light grayish brown @ 88.8'	
														90		491			

BLACK & VEATCH

BORING LOG

BORING NO. CB-C4

CLIENT	PROJECT	PROJECT NO.
Detroit Edison	Fermi 3 COL Application	147483

PROJECT LOCATION	COORDINATES	GROUND ELEVATION (DATUM)	TOTAL DEPTH
Monroe, MI	N 6230.3' E 4663.3'	580.8 ft (NAVD 88)	133.5 (feet)

SURFACE CONDITIONS	COORDINATE SYSTEM	DATE START	DATE FINISHED
Gravel parking lot	Plant	07/17/07	08/08/07

LOGGED BY	CHECKED BY	APPROVED BY
TB ECA TB for Bonnie/Ang/Mass	TB for Dogbey/Bonnie	Meyer

SAMPLING							CORING										
SAMPLE TYPE	SAMPLE NUMBER	SET 6 INCHES	2ND 6 INCHES	3RD 6 INCHES	N VALUE	SAMPLE RECOVERY	CORE SIZE	RUN NUMBER	RUN LENGTH	RUN RECOVERY	RQD RECOVERY	PERCENT RECOVERY	RQD	DEPTH (FEET)	SAMPLE TYPE	ELEVATION (FEET)	GRAPHIC LOG	CLASSIFICATION OF MATERIALS	REMARKS
														90					
														91		490		10°,J,VN,Cl,Sp,WA,SR @ 90.7'	
																		70°,J,T,No,No,Pl,SR @ 90.7-91.0'	
																		shale partings @ 91.0'	
														92		489		shale partings - 0°,B,VN,WA,SR @ 91.2',91.3',91.5', 91.6'	
																		pitted @ 91.2-91.3'	
																		0°,B,T,No,No,Pl,SR @ 91.8'	
																		anhydrite filled healed fracture @ 92.0-92.3'	
														93		488		shale parting @ 92.2'	
HQ	14	5.0	5.0	3.0	100	60												0°,B,T,No,No,Pl,SR @ 93.0'	
										93.5									Core box #6 starts @ 93.5'.
														94		487		argillaceous @ 93.6-93.7'	
																		0°,B,T,No,No,Pl,SR @ 93.7', 93.8', 93.9', 94.3'	
																		90°,J,T,No,No,Pl,SR @ 93.7-93.9'	
																		convoluted bedding @ 94.2-94.7'	
														95		486		0°,B,T,No,No,Pl,SR @ 94.3'	
																		0°,B,T,No,No,Pl,SR @ 94.9',95.1',95.3'	
																		fragmented @ 95.6-95.8'	
HQ	15	5.0	4.6	1.7	92	34								96		485		95.8	
																		20°,J,T,No,No,Pl,SR @ 95.8-96.05'	
																		DOLOMITE; grayish brown; micritic; fresh; strong; hard; banded; (Bass Islands Group).	
																		shale partings - 0°,B,VN,Pl,SR @ 96.4',96.8'	
														97		484		90°,J,T,No,No,Pl,SR @ 96.4-96.9'	
														98		483		shale partings - 0°,B,VN,Pl,SR @ 98.0',98.1'	
										98.5						482		98.9	
														99				DOLOMITE; gray; micritic; fresh; strong; hard; massive; w/stylolites; (Bass Islands Group).	
																		30°,J,T,No,No,Pl,SR @ 98.9-99.1', 99.2-99.4'	
														100		481		0°,B,T,No,No,Pl,SR @ 99.5', 99.9',100.1',100.2', 100.3', 100.4', 101.2', 101.3'	
																		90°,J,T,No,No,Pl,SR @ 100.3-100.4'	
HQ	16	5.0	5.0	2.9	100	58								101		480		90°,J,T,No,No,Ir,SR @ 101.3-101.7'	
																		90°,J,T,No,No,Pl,SR @ 101.3-101.7', 101.7-101.8'	
														102		479		shale partings - 0°,B,VN,Pl,SR @ 101.65', 101.85'	
																		0°,B,T,No,No,Pl,SR @ 102.4'	
														103		478			
										103.5								shale parting - 0°,B,Pl,SR @ 103.8'	
														104		477		40°,J,T,No,No,Pl,SR @ 104.2-104.4'	
																		90°,J,T,No,No,Pl,SR @ 104.7-105.5'	
														105		476			

BLACK & VEATCH

BORING LOG

BORING NO. CB-C4

CLIENT	PROJECT	PROJECT NO.
Detroit Edison	Fermi 3 COL Application	147483

PROJECT LOCATION	COORDINATES	GROUND ELEVATION (DATUM)	TOTAL DEPTH
Monroe, MI	N 6230.3' E 4663.3'	580.8 ft (NAVD 88)	133.5 (feet)

SURFACE CONDITIONS	COORDINATE SYSTEM	DATE START	DATE FINISHED
Gravel parking lot	Plant	07/17/07	08/08/07

LOGGED BY	CHECKED BY	APPROVED BY
TB ECA TB for Bonnie/Ang/Mass	Dogbey/Bonnie	Meyer

SAMPLING: SAMPLE TYPE	SAMPLE NUMBER	SET 6 INCHES	2ND 6 INCHES	3RD 6 INCHES	N VALUE	SAMPLE RECOVERY

CORING: CORE SIZE	RUN NUMBER	RUN LENGTH	RUN RECOVERY	RQD RECOVERY	PERCENT RECOVERY	RQD
HQ	17	5.0	4.8	2.7	96	54
HQ	18	5.0	4.9	3.1	98	62
HQ	19	5.0	3.7	1.4	74	28

108.5

113.5

118.5

DEPTH (FEET) | SAMPLE TYPE | ELEVATION (FEET) | GRAPHIC LOG

105 (475) 106 (474) 107 (473) 108 (472) 109 (471) 110 (470) 111 (469) 112 (468) 113 (467) 114 (466) 115 (465) 116 (464) 117 (463) 118 (462) 119 (461) 120

CLASSIFICATION OF MATERIALS

shale partings - 0°,B,T,Pl,SR @ 104.7',105.5',105.6'

80°,J,T,No,No,Pl,SR @ 105.55-106.6'

shale parting - 0°,B,T,Pl,SR @ 106.6'

shale parting - 0°,B,T,Pl,SR @ 107.9'

shale partings - 0°,B,VN,Pl,SR @ 108.7',108.9'

grades grayish brown @ 109.5'

10°,J,T,No,No,Pl,SR @ 112.0'
20°,J,T,No,No,Pl,SR @ 112.1'
30°,J,T,anhydrite,Sp,Pl,SR @ 112.2-112.3'
80°,J,T,No,No,Pl,SR @ 112.7-113.2'
0°,B,T,No,No,Pl,SR @ 112.7', 112.8', 113.3'

90°,J,T,anhydrite,Sp,Pl,SR @ 113.5-115.0'

70°,J,T,No,No,Pl,SR @ 114.7-114.9'

shale partings - 0°,B,VN,Pl,SR @ 115.3',115.7',116.0'

40°,J,T,No,No,Pl,SR @ 116.0-116.1'

116.8

DOLOMITE; argillaceous; very dark gray; micritic; fresh; strong; hard; (Salina Group - Unit F).

119.1

90°,J,T,No,No,Pl,SR @ 119.1-119.6'

DOLOMITE; grayish brown & gray, banded; micritic; fresh; strong; hard; (Salina Group - Unit F).

REMARKS

Core box #7 starts @ 108.5'.

BLACK & VEATCH

BORING LOG

BORING NO. CB-C4

CLIENT	PROJECT	PROJECT NO.
Detroit Edison	Fermi 3 COL Application	147483

PROJECT LOCATION	COORDINATES	GROUND ELEVATION (DATUM)	TOTAL DEPTH
Monroe, MI	N 6230.3' E 4663.3'	580.8 ft (NAVD 88)	133.5 (feet)

SURFACE CONDITIONS	COORDINATE SYSTEM	DATE START	DATE FINISHED
Gravel parking lot	Plant	07/17/07	08/08/07

LOGGED BY	CHECKED BY	APPROVED BY
TB ECA TB for Bonnie/Ang/Mass	EM for TB Dogbey/Bonnie	Meyer

SAMPLING: SAMPLE TYPE	SAMPLE NUMBER	SET 6 INCHES	2ND 6 INCHES	3RD 6 INCHES	N VALUE	SAMPLE RECOVERY
CORING: CORE SIZE	RUN NUMBER	RUN LENGTH	RUN RECOVERY	RQD RECOVERY	PERCENT RECOVERY	RQD
HQ	20	5.0	4.1	0.3	82	6
HQ	21	5.0	5.0	2.3	100	46
HQ	22	5.0	3.5	0.6	70	12

DEPTH (FEET)	ELEVATION (FEET)	GRAPHIC LOG	CLASSIFICATION OF MATERIALS	REMARKS
120			0°,B,T,No,No,PI,SR @ 119.2', 119.4', 119.55', 119.6', 119.7'	
			119.7	
121	460		DOLOMITE; gray; micritic; fresh; strong; hard; w/ bands of anhydrite; (Salina Group - Unit F). 0°,B,T,No,No,PI,SR @ 120.1', 120.4', 120.5', 120.9', 121.1', 121.3' 80°,J,T,No,No,PI,SR @ 120.6-120.8', 121.3-121.6', 122.5-122.7' anhydrite beds @ 121.1-121.15', 121.25-121.3', 121.7-121.8', 121.8-121.9', 121.9-122.0', 122.2-122.3', 122.5-122.6', 122.9-123.0' 0°,B,VN,Ca,Fi,PI,SR @ 122.2' fractured @ 122.5-122.6'	
122	459			
123	458			
123.5				Core box #8 starts @ 123.5'.
124	457		10°,J,T,No,No,PI,SR @ 123.0' fractured @ 123.0-123.3' anhydrite beds @ 123.8-123.9', 124.6-124.8' 0°,B,T,No,No,PI,SR @ 124.0', 124.2', 125.3', 126.0', 126.7', 127.1', 127.7', 127.8', 128.1'	
125	456			
126	455		10°,J,T,No,No,PI,SR @ 125.8' grayish brown; w/anhydrite beds @ 126.1-126.7'	
127	454		light gray; micritic; fresh; strong; hard; thin limestone bed @ 127.1-127.4' fractured @ 127.3-127.4'	
128	453		light gray; micritic; fresh; strong; hard; thin limestone bed @ 127.7-127.8'	
128.5			128.1	
129	452		LIMESTONE; light gray; micritic; fresh to slightly weathered; strong; hard; (Salina Group - Unit F).	
130	451		0°,B,T,No,No,PI,SR @ 129.9', 130.1', 130.2', 130.3', 130.5'	
131	450		0°,B,T,No,No,PI,SR @ 131.2', 131.5', 131.7',131.8'	
132	449		90°,J,T,No,No,PI,SR @ 131.9-132.0' 0°,B,T,No,No,PI,SR @ 132.0' claystone; highly weathered @ 132.1-132.7'	
133	448		vuggy @ 133.1' 0°,B,T,No,No,PI,SR @ 133.3'	
133.5				Bottom of boring @ 133.5'. Water level @ 21.2' @ completion of drilling. Boring
134	447			
135	446			

BLACK & VEATCH

BORING LOG

BORING NO. CB-C4
SHEET 10 OF 10

CLIENT	PROJECT	PROJECT NO.
Detroit Edison	Fermi 3 COL Application	147483

PROJECT LOCATION	COORDINATES	GROUND ELEVATION (DATUM)	TOTAL DEPTH
Monroe, MI	N 6230.3' E 4663.3'	580.8 ft (NAVD 88)	133.5 (feet)

SURFACE CONDITIONS	COORDINATE SYSTEM	DATE START	DATE FINISHED
Gravel parking lot	Plant	07/17/07	08/08/07

LOGGED BY	CHECKED BY	APPROVED BY
TB ECA TJB for Bonnie/Ang/Mass	Dogbey/Bonnie TJB	Meyer

SAMPLING: SAMPLE TYPE | SAMPLE NUMBER | SET 6 INCHES | 2ND 6 INCHES | 3RD 6 INCHES | N VALUE | SAMPLE RECOVERY

CORING: CORE SIZE | RUN NUMBER | RUN LENGTH | RUN RECOVERY | RQD RECOVERY | PERCENT RECOVERY | RQD

DEPTH (FEET)	SAMPLE TYPE	ELEVATION (FEET)	GRAPHIC LOG	CLASSIFICATION OF MATERIALS	REMARKS
135					backfilled w/ bentonite chips on 09/13/07.
136		445			
137		444			
138		443			
139		442			
140		441			
141		440			
142		439			
143		438			
144		437			
145		436			
146		435			
147		434			
148		433			
149		432			
150		431			

4/7/2008 6:28 PM DTE - Fermi 3 Geotech

BLACK & VEATCH

BORING LOG

BORING NO. CB-C5

CLIENT	PROJECT	PROJECT NO.
Detroit Edison	Fermi 3 COL Application	147483

PROJECT LOCATION	COORDINATES	GROUND ELEVATION (DATUM)	TOTAL DEPTH
Monroe, MI	N 6123.0' E 4663.4'	581.0 ft (NAVD 88)	131.0 (feet)

SURFACE CONDITIONS	COORDINATE SYSTEM	DATE START	DATE FINISHED
Gravel parking lot, northeast corner	Plant	07/17/07	07/28/07

LOGGED BY	CHECKED BY	APPROVED BY
Mass/Ang/Grainger	Dogbey/Bonnie	Meyer

SAMPLING: SAMPLE TYPE	SAMPLE NUMBER	SET 6 INCHES	2ND 6 INCHES	3RD 6 INCHES	N VALUE	SAMPLE RECOVERY	CORING: CORE SIZE	RUN NUMBER	RUN LENGTH	RUN RECOVERY	RQD RECOVERY	PERCENT RECOVERY	RQD	DEPTH (FEET)	ELEVATION (FEET)	CLASSIFICATION OF MATERIALS	REMARKS
														0	581	Well-graded GRAVEL with Sand (GW) - About 70% fine to coarse, angular to subrounded, hard gravel w/ max. size 3"; about 25% fine to coarse, angular to subangular, hard sand; about 5% angular, hard cobbles w/max. size 4"; grayish brown; dry to moist; strong reaction w/HCl; homogeneous; (Fill).	Boring advanced w/vacuum excavation.
														1	580		
														2	579		
														3	578		
														4	577		
														5	576		
										6.0				6	575		
S	1					NR								7	574	Well-graded GRAVEL with Silt and Sand (GW) - About 75% fine to coarse, angular to subrounded, hard gravel w/max. size 3"; about 15% fine to coarse, angular to subangular, hard sand; about 10% low plasticity, low toughness, rapid dilatancy, low dry strength fines; brown; weak reaction w/HCl; (Fill).	Stopped vacuum excavation @ 6.0'. Hole caved to 1.9'. Continued w/4" ID sonic continuous sampler w/ nominal 6" temporary steel casing advanced w/sampler. Discrete sample S01A collected from S-1.
														8	573		
														9	572		
										10				10	571		Set nominal 6" temporary steel casing to 10.0'. Below 10.0' continued w/NWJ rods and 4½" tricone bit using bentonite mud as drilling fluid. SPT performed w/D-50 automatic hammer. Approximately 100 gallons drilling fluid loss @ 11.5'. Below 11.5' continued w/4" ID
SPT	2	7		9	3	12	0.8							11	570	Well graded GRAVEL with Sand (GW) - About 70% fine to coarse, angular to subrounded, hard gravel w/ max. size 3"; about 25% fine to coarse, angular to subangular, hard sand; about 5% angular, hard cobbles w/max. size 4"; grayish brown; dry to moist; strong reaction w/HCl; homogeneous; (Fill).	
										11.5				12	569		
																Lean CLAY (CL) - About 100% medium plasticity, medium toughness, no dilatancy fines; olive gray; soft to firm; moist; homogeneous; (Lacustrine Deposit).	
S	3					2.3								13	568		
														14	567		
														15	566		

12.3

7/11/2008 2:52 . DTE - Fermi 3 Geotech

BLACK & VEATCH

BORING LOG

BORING NO. CB-C5

CLIENT	PROJECT	PROJECT NO.
Detroit Edison	Fermi 3 COL Application	147483

PROJECT LOCATION	COORDINATES	GROUND ELEVATION (DATUM)	TOTAL DEPTH
Monroe, MI	N 6123.0' E 4663.4'	581.0 ft (NAVD 88)	131.0 (feet)

SURFACE CONDITIONS	COORDINATE SYSTEM	DATE START	DATE FINISHED
Gravel parking lot, northeast corner	Plant	07/17/07	07/28/07

LOGGED BY	CHECKED BY	APPROVED BY
JBK EVA FO for Mass/Ang/Grainger	EM for TB Dogbey/Bonnie	EM Meyer

SAMPLE TYPE	SAMPLE NUMBER	SET 6 INCHES	2ND 6 INCHES	3RD 6 INCHES	N VALUE	SAMPLE RECOVERY	DEPTH (FEET)	ELEVATION (FEET)	CLASSIFICATION OF MATERIALS	REMARKS
			15.0				15	566		sonic continuous sampler w/ nominal 6" temporary steel casing advanced w/sampler. Set nominal 6" temporary steel casing to 12.3'. PP = 1.25 TSF @ 13.0'. Discrete sample S3A collected @ 14.5-15.0'. Below 15.0' continued w/NWJ rods w/4½" tricone bit using bentonite mud as drilling fluid. PP = 3.25-3.75 TSF @ 17.5'. PP > 4.5 TSF @ 20.0'. Thin walled tube for TW-6 slipped off connecting rods into hole; TW-6 retrieved by overdrilling w/ sonic rig. Below 22.5' continued w/4" ID sonic continuous sampler w/ nominal 6" temporary steel casing advanced w/sampler. Discrete sample S7A collected from 23.5-24.0'. PP > 4.5 TSF for S7. Below 24.5' continued w/NWJ rods w/4½" tricone bit using bentonite mud as drilling fluid. Approximately 200 gallons drilling fluid lost @ 24.5'.
TW	4					1.7	16	565	Lean CLAY (CL) - About 100% medium plasticity, medium toughness, no dilatancy fines; brown; hard; moist; (Glacial Till).	
							17	564		
TW	5					1.8	18	563	Lean CLAY (CL) - About 100% medium plasticity, medium toughness, no dilatancy fines; trace fine to coarse, subrounded sand; trace fine to coarse, subrounded gravel w/max. size ½", fractured w/2 hammer blows; olive brown; hard; moist; (Glacial Till).	
							19	562		
							20	561		
TW	6					NR	21	560		
							22	559		
S	7		22.5				23	558	Lean CLAY with Gravel (CL) - About 75% medium plasticity, medium toughness, no dilatancy fines; about 15% fine to coarse, subrounded, hard gravel, w/max. size 2½"; about 10% fine to coarse, subrounded sand; dark gray; hard; moist; (Glacial Till). 4" cobble @ about 23.5'.	
							24	557		
			24.5				25	556	DOLOMITE; weathered	
							26	555		
S	8		26.5			3.5	27	554	DOLOMITE; light brownish gray; crystalline; micritic; fresh; strong; hard; (Bass Islands Group).	
							28	553		
							29	552		
							30	551		

7/11/2008 2:52 DTE - Fermi 3 Geotech

BLACK & VEATCH

BORING LOG

BORING NO. CB-C5

CLIENT	PROJECT	PROJECT NO.
Detroit Edison	Fermi 3 COL Application	147483

PROJECT LOCATION	COORDINATES	GROUND ELEVATION (DATUM)	TOTAL DEPTH
Monroe, MI	N 6123.0' E 4663.4'	581.0 ft (NAVD 88)	131.0 (feet)

SURFACE CONDITIONS	COORDINATE SYSTEM	DATE START	DATE FINISHED
Gravel parking lot, northeast corner	Plant	07/17/07	07/28/07

LOGGED BY	CHECKED BY	APPROVED BY
TB for GLA 60 for Mass/Ang/Grainger	EM for TB Dogbey/Bonnie	EM Meyer

SAMPLE TYPE	SAMPLE NUMBER	SET 6 INCHES	2ND 6 INCHES	3RD 6 INCHES	N VALUE	SAMPLE RECOVERY	DEPTH (FEET)	ELEVATION (FEET)	CLASSIFICATION OF MATERIALS	REMARKS
							30	551		Refusal to tricone bit @ 26.5'. Below 26.5' continued w/4" ID sonic sampler w/ nominal 6" temporary steel casing advanced w/sampler. Set nominal 6" temporary steel casing to 30.7'. Sonic core stored in box labeled SC1. Hole opened to 31.0'. Below 31.0' continued w/triple tube wire line core barrel w/ diamond bit using water as drilling fluid. Core box #1 starts @ 31.0'.
			31.0				31	550	31.0 DOLOMITE; grayish brown; crystalline; micritic; slightly weathered; strong; hard; thin bedded; (Bass Islands Group). 20°,B,MW,UK,Su,Pl,R @ 31.2',32.0',32.5',32.8' 80°,J,N,No,No,Ir,R @ 32.0-37.8' fractured @ 32.0-34.4'	
							32	549		
							33	548	20°,B,MW,UK,Su,Pl,R @ 33.1',33.2',33.4',33.7'	
PQ	1	5.0	5.0	0.8	100	16				
							34	547	20°,B,MW,UK,Su,Pl,R @ 34.3' 80°,J,N,No,No,Ir,R @ 34.7-35.6'	
							35	546	20°,B,MW,UK,Su,Pl,R @ 35.0',35.2' fractured @ 35.0-35.5'	
			36.0				36	545	36.2 DOLOMITE; white & dark gray, mottled; micritic; fresh; very strong; hard; thin bedded; (Bass Islands Group). 80°,J,N,No,No,Ir,VR @ 36.2-37.8',38.2-39.6'	
							37	544	20°,B,MW,UK,Su,Pl,R @ 37.2' 80°,J,N,No,No,Ir,R @ 37.2'	
							38	543	20°,B,N,No,No,Ir,R @ 38.2' bedding 0° @ 38.5-39.0'	
PQ	2	5.0	5.0	3.2	100	64				
							39	542	39.0 DOLOMITE; argillaceous; dark grayish brown; pitted; micritic; fresh; slightly weathered; strong; hard; fossiliferous; (Bass Islands Group). ¼" black shale parting @ 39.0'	
							40	541	20°,B,N,No,No,Ir,R @ 39.2'	Core box #2 starts @ 40.0'.
			41.0				41	540	0°,B,MW,UK,Su,Ir,R @ 40.8',41.0',41.2',41.3',41.4' 20°,B,MW,UK,Su,Pl,R @ 41.3' 80°,J,N,No,No,Ir,VR @ 41.5-42.2'	
							42	539	0°,B,MW,UK,Su,Ir,R @ 42.4'	
							43	538		
PQ	3	5.0	4.9	3.6	98	72				
							44	537		
							45	536	44.8	

7/11/2008 2:52 . DTE - Fermi 3 Geotech

BLACK & VEATCH

BORING LOG

BORING NO. CB-C5

CLIENT	PROJECT	PROJECT NO.
Detroit Edison	Fermi 3 COL Application	147483

PROJECT LOCATION	COORDINATES	GROUND ELEVATION (DATUM)	TOTAL DEPTH
Monroe, MI	N 6123.0' E 4663.4'	581.0 ft (NAVD 88)	131.0 (feet)

SURFACE CONDITIONS	COORDINATE SYSTEM	DATE START	DATE FINISHED
Gravel parking lot, northeast corner	Plant	07/17/07	07/28/07

LOGGED BY	CHECKED BY	APPROVED BY
TB for SCA GO for Mass/Ang/Grainger	Em for TB Dogbey/Bonnie	Em Meyer

SAMPLING: SAMPLE TYPE, SAMPLE NUMBER, SET 6 INCHES, 2ND 6 INCHES, 3RD 6 INCHES, N VALUE, SAMPLE RECOVERY

CORING: CORE SIZE, RUN NUMBER, RUN LENGTH, RUN RECOVERY, RQD RECOVERY, PERCENT RECOVERY, RQD

SAMPLE TYPE	SAMPLE NUMBER	SET 6 INCHES	2ND 6 INCHES	3RD 6 INCHES	N VALUE	SAMPLE RECOVERY	DEPTH (FEET)	ELEVATION (FEET)	CLASSIFICATION OF MATERIALS	REMARKS
							45	536	DOLOMITE; oolitic; light brownish gray; crystalline; fresh; strong; hard; w/stylolites; (Bass Islands Group).	
			46.0				46	535	intersecting 90°,J,N,No,No,Ir,R @ 46.0-48.5' 0°,B,N,No,No,Ir,R @ 46.1',46.2',46.5',47.2'	
							47	534		
							48	533	0°,B,N,No,No,Ir,R @ 47.7',47.9',	
PQ	4	5.0	5.0	1.3	100	26			0°,B,N,No,No,Ir,R @ 48.4',48.8',49.0'	
							49	532		
									0°,B,N,No,No,Ir,R 49.5' intersecting 90°,J,N,No,No,Ir,R @ 49.8-51.0'	Core box #3 starts @ 49.3'.
							50	531	49.9 DOLOMITE; dark grayish brown; micritic; fresh; slightly weathered; strong; hard; (Bass Islands Group). 0°,B,N,No,No,Ir,R @ 50.0',50.3',50.4'	
			51.0				51	530	51.3 DOLOMITE; oolitic; light brownish gray; crystalline; fresh; strong; hard; massive; w/argillaceous parting @ depth; massive; (Bass Islands Group). 0.2' black shale band; moderately weathered @ 51.3'	
							52	529		
							53	528		
PQ	5	5.0	5.0	4.3	100	86			10°,B,N,No,No,Pl,R @ 53.4',54.7'	
							54	527	argillaceous parting @ 54.2',54.5'	
									80°,J,N,No,No,Ir,R @ 54.7',55.0'	
							55	526	55.1 DOLOMITE; argillaceous; gray; fresh; strong; hard; banded w/stylolites; (Bass Islands Group). convoluted bedding @ 55.1-57.9' 10°,B,N,No,No,Pl,R @ 55.6' 85-90°,J,T,No,No,Ir,R @ 56.0-58.7' 0-5°,B,N,Cl,Su,Ir,R @ 56.1',56.5'	
			56.0				56	525		
							57	524		
									0-5°,B,N,Cl,Su,Ir,R @ 57.6',57.9',58.1'	
							58	523		
PQ	6	5.0	5.0	2.3	100	46				
							59	522		Core box #4 starts @ 58.8'.
									0-5°,B,N,Cl,Su,Ir,R @ 59.3',59.5' 85-90°,J,T,No,No,Ir,R @ 59.5-61.0'	
							60	521		

BLACK & VEATCH

BORING LOG

BORING NO. CB-C5

SHEET 5 OF 9

CLIENT	PROJECT	PROJECT NO.
Detroit Edison	Fermi 3 COL Application	147483

PROJECT LOCATION	COORDINATES	GROUND ELEVATION (DATUM)	TOTAL DEPTH
Monroe, MI	N 6123.0' E 4663.4'	581.0 ft (NAVD 88)	131.0 (feet)

SURFACE CONDITIONS	COORDINATE SYSTEM	DATE START	DATE FINISHED
Gravel parking lot, northeast corner	Plant	07/17/07	07/28/07

LOGGED BY	CHECKED BY	APPROVED BY
TB for ESA G.O.G. Mass/Ang/Grainger	EM for TB Dogbey/Bonnie	EM Meyer

SAMPLING							CORING									
SAMPLE TYPE	SAMPLE NUMBER	SET 6 INCHES	2ND 6 INCHES	3RD 6 INCHES	N VALUE	SAMPLE RECOVERY	CORE SIZE	RUN NUMBER	RUN LENGTH	RUN RECOVERY	RQD RECOVERY	PERCENT RECOVERY	RQD	DEPTH (FEET)	SAMPLE TYPE	ELEVATION (FEET)	GRAPHIC LOG	CLASSIFICATION OF MATERIALS	REMARKS
														60		521		fractured @ 59.5-63.1' 0-5°,B,N,Cl,Su,Ir,R @ 60.0',60.4',60.7'	
														61		520		85-90°,J,N,No,No,Ir,VR @ 60.8-63.1'	No drilling fluid return @ 60.8-61.0'.
			61.0											62		519		0-5°,B,UK,Sp,WA,R @ 61.3',61.4',61.7',61.9',62.4'	
														63		518		0-5°,B,UK,Sp,WA,R @ 62.6',62.8',63.1'	
PQ	7	5.0	5.0	2.8	100	56								64		517		63.1 DOLOMITE; brecciated; grayish brown; fresh; strong; hard; healed w/calcite; pitted in areas; (Bass Islands Group).	
														65		516			
			66.0											66		515			
														67		514		60°,J,MW,No,No,Ir,VR @ 67.0',67.2',67.4'	
PQ	8	5.0	5.0	3.5	100	70								68		513			Core box #5 starts @ 67.6'.
														69		512		0-5°,J,No,No,Ir,VR @ 69.2',69.8'	
														70		511		0-5°,J,No,No,Ir,VR @ 70.3' 0°,B,W,Cl,Fi,Ir,VR @ 70.5'	
			71.0											71		510		71.7	
														72		509		DOLOMITE; light gray; fresh; very strong; hard; banded; w/stylolites; (Bass Islands Group). 60°,J,MW,No,No,Ir,VR @ 71.7' 0°,B,MW,No,No,WA,R @ 71.8',72.0',72.7',73.0',73.3'	
														73		508			
PQ	9	5.0	5.0	4.0	100	80								74		507		0°,B,MW,No,No,WA,R @ 74.0',75.0',75.5'	
														75		506			

BLACK & VEATCH **BORING LOG**

BORING NO. CB-C5
SHEET 6 OF 9

CLIENT	PROJECT	PROJECT NO.
Detroit Edison	Fermi 3 COL Application	147483

PROJECT LOCATION	COORDINATES	GROUND ELEVATION (DATUM)	TOTAL DEPTH
Monroe, MI	N 6123.0' E 4663.4'	581.0 ft (NAVD 88)	131.0 (feet)

SURFACE CONDITIONS	COORDINATE SYSTEM	DATE START	DATE FINISHED
Gravel parking lot, northeast corner	Plant	07/17/07	07/28/07

LOGGED BY	CHECKED BY	APPROVED BY
TB for GA GO for Mass/Ang/Grainger	EM for TB Dogbey/Bonnie	EM Meyer

SAMPLING							CORING							DEPTH (FEET)	SAMPLE TYPE	ELEVATION (FEET)	GRAPHIC LOG	CLASSIFICATION OF MATERIALS	REMARKS
SAMPLE TYPE	SAMPLE NUMBER	SET 6 INCHES	2ND 6 INCHES	3RD 6 INCHES	N VALUE	SAMPLE RECOVERY	CORE SIZE	RUN NUMBER	RUN LENGTH	RUN RECOVERY	RQD RECOVERY	PERCENT RECOVERY	RQD						
														75		506			
										76.0				76		505		85-90°,J,N,No,No,Ir,R @ 76.0'	Core box #6 starts @ 76.2'.
																		0°,B,N,Sp,Pl,R @ 76.2'	
														77		504			
																		0°,B,N,Sp,Pl,R @ 77.4',77.5'	
														78		503		0°,B,N,Sp,Pl,R @ 77.9,78.2'	
																		78.2	
PQ	10	5.0	5.0	2.8	100	56												SHALE; dark gray; slightly weathered; strong; moderately hard; weathered to soft clay seam @ top; (Bass Islands Group).	
														79		502		0°,B,N,Sp,Pl,R @ 78.5'	
																		79.0	Soft material @ 79.5-81.0'.
														80		501		DOLOMITE; dark gray; fresh to slightly weathered; very strong; hard; banded w/stylolites & argillaceous partings; (Bass Islands Group).	
																		fractured @ 79.1-79.4'	
																		0°,B,N,Sp,Pl,R @ 79.0'	
										81.0				81		500		80°,J,N,H,No,Ir,VR @ 80.0',81.0'	
																		0°,B,N,Sp,Pl,R @ 80.0'	
														82		499		80°,J,N,H,No,Ir,VR @ 81.8'	
																		0-5°,B,MW,No,No,Ir,R (solutioned) @ 82.7'	
														83		498			
PQ	11	5.0	5.0	3.4	100	68												0-5°,B,W,Cl,Pa,Ir,R @ 83.3'	
														84		497		0-5°,B,MW,No,No,Ir,R (solutioned) @ 83.9'	
														85		496			
																		0-5°,B,MW,No,No,Ir,R (solutioned) @ 85.5',85.7'	
										86.0				86		495		85-90°,J,T,H,Ir @ 86.3-86.7'	Core box #7 starts @ 86.0'.
														87		494			
																		87.8	
														88		493		SHALE; dark gray; (Bass Islands Group). shale parting weathered to residual soil; hard; moist @ 87.9'	
PQ	12	5.0	5.0	3.1	100	62												88.3	
														89		492		DOLOMITE; dark gray; fresh to slightly weathered; very strong; hard; banded w/stylolites & argillaceous partings; (Bass Islands Group).	
																		0-5°,B,MW,No,No,Ir,R (solutioned) @ 88.1',88.2',88.3'	
														90		491			

BLACK & VEATCH

BORING LOG

BORING NO. CB-C5

CLIENT	PROJECT	PROJECT NO.
Detroit Edison	Fermi 3 COL Application	147483

PROJECT LOCATION	COORDINATES	GROUND ELEVATION (DATUM)	TOTAL DEPTH
Monroe, MI	N 6123.0' E 4663.4'	581.0 ft (NAVD 88)	131.0 (feet)

SURFACE CONDITIONS	COORDINATE SYSTEM	DATE START	DATE FINISHED
Gravel parking lot, northeast corner	Plant	07/17/07	07/28/07

LOGGED BY	CHECKED BY	APPROVED BY
Mass/Ang/Grainger	Dogbey/Bonnie	Meyer

SAMPLING							CORING									
SAMPLE TYPE	SAMPLE NUMBER	SET 6 INCHES	2ND 6 INCHES	3RD 6 INCHES	N VALUE	SAMPLE RECOVERY	CORE SIZE	RUN NUMBER	RUN LENGTH	RUN RECOVERY	RQD RECOVERY	PERCENT RECOVERY	RQD	DEPTH (FEET)	SAMPLE TYPE	ELEVATION (FEET)	GRAPHIC LOG	CLASSIFICATION OF MATERIALS	REMARKS
														90		491		0-5°,B,MW,No,No,Pl,R (solutioned) @ 88.3',88.5' 85-90°,J,T,H,Ir @ 88.8-90.4' 0-5°,B,MW,No,No,Pl,R (solutioned) @ 89.7' 0-5°,B,MW,No,No,Pl,R (solutioned) @ 90.0',90.1'	
			91.0											91		490			
														92		489		fractured @ 92.1-93.4' 0°,B,N,No,No,Pl,SR @ 92.1',92.3',92.4',92.5',92.6', 92.7', 92.75',92.9',93.0',93.05',93.1',93.2',93.4' 60°,J,T,No,No,Ir,R @ 92.3', 92.7'	
														93		488		90°,J,T,No,No,Ir,R @ 92.6-93.4', 94.0-94.3'	
PQ	13	5.0	5.0	2.1	100	42								94		487		0°,B,N,No,No,Pl,SR @ 94.0',94.3',94.35'	
																		94.6	
														95		486		DOLOMITE; gray; crystalline; micritic; fresh; very strong; hard; medium to thick bedded; (Bass Islands Group). 0°,B,N,No,No,Pl,SR @ 94.7',94.8',95.3',95.5' 90°,J,T,No,No,Ir,R @ 95.5-96.5' (2 intersecting)	
			96.0											96		485			Core box #8 starts @ 96.0'.
														97		484		½" shale band; partly weathered to soft white clay @ 96.4' 0°,B,T,No,No,Pl,SR @ 96.7', 96.8', 97.1' 60°,J,T,No,No,Pl,SR @ 96.8'	
														98		483		90°,J,N,No,No,Ir,R @ 97.1-98.3', 98.7-99.1', 100.8-101.3'	
PQ	14	5.0	5.0	2.6	100	52								99		482		0°,B,N,No,No,Ir,SR (solutioned) @ 98.3',99.1',99.2'	
														100		481		0°,B,N,No,No,Ir,SR (solutioned) @ 100.1'	
			101.0											101		480		0°,B,N,No,No,Ir,SR (solutioned) @ 100.8'	
																		0°,B,N,No,No,Ir,SR (solutioned) @ 101.4'	
														102		479		0°,B,N,No,No,Ir,SR (solutioned) @ 102.0',102.3'	
																		soft; weathered @ 102.4-103.2'	Soft drilling @ 102.4-103.2'.
														103		478			Core barrel blocked @ 102.4'.
PQ	15	5.0	4.7	3.2	94	64												0°,B,N,No,No,Ir,SR (solutioned) @ 103.2',103.5'	
																		103.6	
														104		477		DOLOMITE; argillaceous; dark grayish brown; micritic; fresh; strong; hard; w/argillaceous parting & stylolites; bedding convoluted; (Bass Islands Group).	Core loss @ 102.4-103.5'.
														105		476			

BLACK & VEATCH

BORING LOG

BORING NO. CB-C5
SHEET 8 OF 9

CLIENT	PROJECT	PROJECT NO.
Detroit Edison	Fermi 3 COL Application	147483

PROJECT LOCATION	COORDINATES	GROUND ELEVATION (DATUM)	TOTAL DEPTH
Monroe, MI	N 6123.0' E 4663.4'	581.0 ft (NAVD 88)	131.0 (feet)

SURFACE CONDITIONS	COORDINATE SYSTEM	DATE START	DATE FINISHED
Gravel parking lot, northeast corner	Plant	07/17/07	07/28/07

LOGGED BY	CHECKED BY	APPROVED BY
Mass/Ang/Grainger	Dogbey/Bonnie	Meyer

SAMPLING							CORING									
SAMPLE TYPE	SAMPLE NUMBER	SET 6 INCHES	2ND 6 INCHES	3RD 6 INCHES	N VALUE	SAMPLE RECOVERY	CORE SIZE	RUN NUMBER	RUN LENGTH	RUN RECOVERY	RQD RECOVERY	PERCENT RECOVERY	RQD	DEPTH (FEET)	SAMPLE TYPE	ELEVATION (FEET)	GRAPHIC LOG	CLASSIFICATION OF MATERIALS	REMARKS
														105		476		60°,J (solutioned) @ 105.5-106.0' 0°,B,N,No,No,Ir,SR (solutioned) @ 105.6'	
			106.0											106		475		80°,J,W,Ca,Fi,Ir (solutioned) @ 106.1-107.1'	Soft drilling @ 106.0-110.0'. Core box #9 starts @ 106.0'.
																		106.7	
														107		474		DOLOMITE; grayish brown; crystalline; slightly weathered; strong; hard; medium bedded; w/stylolites; (Bass Islands Group). 80-90°,J,N,No,No,Ir,R @ 106.8-107.3' 0-5°,B,W,No,No (solutioned) @ 107.3',107.7',107.9'	
PQ	16	5.0	4.6	1.9	92	38								108		473			
														109		472		fractured @ 109.0-109.2' healed brecciated @ 109.0-111.4' 60°,J,MW,No,No,Ir,VR @ 109.2' 80-90°,J,N,No,No,Ir,R @ 109.8-110.9' 0-5°,B,W,No,No (solutioned) @ 109.8'	
														110		471			
			111.0											111		470			
																		111.4	
														112		469		DOLOMITE; gray & very dark gray; interbedded w/ shaley DOLOMITE; slightly weathered; strong; moderately hard; (Salina Group - Unit F). 20°,J,Ca,Pa,Pl,SR @ 111.6',112.0' 90°,J,N,No,No,Ir @ 112.3-113.4' shaley dolomite @ 112.4-113.3; 113.8-114.1' highly fractured @ 112.4-114.6' 0°,B,W,Ca,Pa,Ir,R (solutioned) @ 113.2', 113.8'	
PQ	17	5.0	4.4	0.5	88	10								113		468			
														114		467			
																		114.1	
														115		466		DOLOMITE; argillaceous; dark greenish gray; moderately weathered; moderately strong; moderately hard; w/bands of shaley dolomite & anhydrite; (Salina Group - Unit F). 90°,J,N,No,No,Ir @ 114.3-114.9', 115.1-116.1'	
			116.0											116		465			Soft drilling @ 116.0-121.0'. Core box #10 starts @ 116.0'.
														117		464			
														118		463			
PQ	18	5.0	1.5	0.0	30	0								119		462			
														120		461			

BLACK & VEATCH

BORING LOG

BORING NO. CB-C5
SHEET 9 OF 9

CLIENT	PROJECT	PROJECT NO.
Detroit Edison	Fermi 3 COL Application	147483

PROJECT LOCATION	COORDINATES	GROUND ELEVATION (DATUM)	TOTAL DEPTH
Monroe, MI	N 6123.0' E 4663.4'	581.0 ft (NAVD 88)	131.0 (feet)

SURFACE CONDITIONS	COORDINATE SYSTEM	DATE START	DATE FINISHED
Gravel parking lot, northeast corner	Plant	07/17/07	07/28/07

LOGGED BY	CHECKED BY	APPROVED BY
Mass/Ang/Grainger	Dogbey/Bonnie	Meyer

SAMPLING: SAMPLE TYPE	SAMPLE NUMBER	SET 6 INCHES	2ND 6 INCHES	3RD 6 INCHES	N VALUE	SAMPLE RECOVERY	CORING: CORE SIZE	RUN NUMBER	RUN LENGTH	RUN RECOVERY	RQD RECOVERY	PERCENT RECOVERY	RQD	DEPTH (FEET)	SAMPLE TYPE	ELEVATION (FEET)	GRAPHIC LOG	CLASSIFICATION OF MATERIALS	REMARKS
														120		461			
																		120.8	
										121.0				121		460		DOLOMITE & ANHYDRITE; interbedded material & color; pale brownish gray & white; fresh; moderately strong; moderately hard; w/vugs filled w/anhydrite crystals; (Salina Group - Unit F).	
							PQ	19	2.5	2.5	0.5	100	20	122		459			
																		122.0	
														123		458		DOLOMITE; gray; micritic; slightly weathered; strong; moderately hard; (Salina Group - Unit F).	
																		122.7	
										123.5								LIMESTONE; argillaceous; dark gray; moderately weathered; moderately strong; moderately hard; vuggy; w/bands of clayey dolomite; gray; thin bedded; (Salina Group - Unit F).	
							PQ	20	2.5	2.2	0.0	88	0	124		457		clayey dolomite band; highly weathered; w/clay in area; medium toughness, slow dilatancy, high dry strength fines @ 123.5-123.7'	Drill chatter @ 124.0-126.0'.
														125		456			
														126		455			
										126.0									Core loss @ 126.0-127.0'.
														127		454			
																		127.3	
							PQ	21	5.0	2.6	0.0	52	0	128		453		CLAYSTONE; dolomitic; gray; moderately weathered; weak; low hardness; thin bedded; w/bands of micritic dolomite; (Salina Group - Unit F). fractured @ 127.7-131.0' 90°,J,Ir,R @ 128.0-129.0'	
														129		452			
														130		451			
														131		450			Bottom of boring @ 131.0'. Water level @ 20.2' @ completion of drilling. Piezometer installed on 08/24/07.
														132		449			
														133		448			
														134		447			
														135		446			

7/11/2008 2:52 PM DTE - Fermi 3 Geotech

BLACK & VEATCH

BORING LOG

BORING NO. CST-AB1

CLIENT	PROJECT	PROJECT NO.
Detroit Edison	Fermi 3 COL Application	147483

PROJECT LOCATION	COORDINATES	GROUND ELEVATION (DATUM)	TOTAL DEPTH
Monroe, MI	N 6577.6' E 4331.1'	580.2 ft (NAVD 88)	30.8 (feet)

SURFACE CONDITIONS	COORDINATE SYSTEM	DATE START	DATE FINISHED
Gravel parking area	Plant	08/25/07	08/25/07

LOGGED BY	CHECKED BY	APPROVED BY
TB Bonnie/Grainger	EB JC TB Dogbey/Bonnie	Meyer EM

SAMPLING							CORING									
SAMPLE TYPE	SAMPLE NUMBER	SET 6 INCHES	2ND 6 INCHES	3RD 6 INCHES	N VALUE	SAMPLE RECOVERY	CORE SIZE	RUN NUMBER	RUN LENGTH	RUN RECOVERY	RQD RECOVERY	PERCENT RECOVERY	RQD	DEPTH (FEET)	SAMPLE TYPE	ELEVATION (FEET)	GRAPHIC LOG	CLASSIFICATION OF MATERIALS	REMARKS
														0		580		COBBLES - About 90% subangular to angular cobbles w/max. size 6"; about 5% fine to coarse gravel; about 5% sand; grayish brown; dry; weak reaction w/HCl; (Fill).	Boring advanced w/vacuum excavation.
														1		579			
														2		578			
														3		577			
														4		576			
														5		575			
														6		574			
										7.0				7		573			Below 7.0' continued w/4" ID sonic continuous sampler w/nominal 6" temporary steel casing advanced w/sampler.
S	1												1.4	8		572			
														9		571			
										10.0				10		570			
														11		569			
														12		568			
S	2												3.0	13		567			
														14		566		Organic SOIL with gravel (OL) - About 80% nonplastic, no dilatancy fines; about 20% fine, angular gravel; very dark grayish brown; very soft; moist; no reaction w/HCl;	13.8 Discrete sample S-2A collected @ 13.8-14.2'. Discrete sample
														15					

BLACK & VEATCH

BORING LOG

BORING NO. CST-AB1

CLIENT	PROJECT	PROJECT NO.
Detroit Edison	Fermi 3 COL Application	147483

PROJECT LOCATION	COORDINATES	GROUND ELEVATION (DATUM)	TOTAL DEPTH
Monroe, MI	N 6577.6' E 4331.1'	580.2 ft (NAVD 88)	30.8 (feet)

SURFACE CONDITIONS	COORDINATE SYSTEM	DATE START	DATE FINISHED
Gravel parking area	Plant	08/25/07	08/25/07

LOGGED BY	CHECKED BY	APPROVED BY
TB Bonnie/Grainger	TB Dogbey/Bonnie	Meyer

SAMPLING							CORING									
SAMPLE TYPE	SAMPLE NUMBER	SET 6 INCHES	2ND 6 INCHES	3RD 6 INCHES	N VALUE	SAMPLE RECOVERY	CORE SIZE	RUN NUMBER	RUN LENGTH	RUN RECOVERY	RQD RECOVERY	PERCENT RECOVERY	RQD	DEPTH (FEET)	SAMPLE TYPE	ELEVATION (FEET)	GRAPHIC LOG	CLASSIFICATION OF MATERIALS	REMARKS
										15.0				15		565			
TW	3					1.5								16		564		Fat CLAY (CH) - About 100% high plasticity, high toughness, no dilatancy fines; very dark greenish gray; soft; moist; no reaction w/HCl; homogeneous; (Lacustrine Deposit). grades about 91% LL=54, PL=17 fines; about 9% sand.	S-2B collected @ 14.2-15.0'. Set nominal 6" temporary steel casing to 15.5'. Below 15.0' continued w/ NWJ rods & 4½" tricone bit using bentonite mud as drilling fluid. SPT performed w/D-50 automatic hammer. PP = 0.25 TSF @ 17.5'.
														17		563			
														18		562		14.2	
SPT	4	4	8	10	18	1.4								19		561		Lean CLAY (CL) - About 90% medium plasticity, medium toughness, no dilatancy, high dry strength fines; about 10% fine to medium sand; dark grayish brown; very stiff; moist; strong reaction w/HCl; homogeneous; (Glacial Till).	
														20		560			
TW	5					1.2								21		559			PP > 4.5 TSF @ 21.7'.
														22		558		18.1	
														23		557		Lean CLAY (CL) - About 85% medium plasticity, medium toughness, no dilatancy, high dry strength fines; about 10% fine to medium sand; about 5% fine to medium, angular, hard; gravel; dark gray; very stiff; moist; strong reaction w/HCl; homogeneous; (Glacial Till).	Drill chatter @ 22.5'.
														24		556			
														25		555			
SPT	6	8	12	14	26	NR								26		554			
														27		553			
														28		552			
														29		551			
														30				22.5	

BLACK & VEATCH

BORING LOG

BORING NO. CST-AB1

CLIENT	PROJECT	PROJECT NO.
Detroit Edison	Fermi 3 COL Application	147483

PROJECT LOCATION	COORDINATES	GROUND ELEVATION (DATUM)	TOTAL DEPTH
Monroe, MI	N 6577.6' E 4331.1'	580.2 ft (NAVD 88)	30.8 (feet)

SURFACE CONDITIONS	COORDINATE SYSTEM	DATE START	DATE FINISHED
Gravel parking area	Plant	08/25/07	08/25/07

LOGGED BY	CHECKED BY	APPROVED BY
TB Bonnie/Grainger	Dogbey/Bonnie TB	Meyer

SAMPLING							CORING									
SAMPLE TYPE	SAMPLE NUMBER	SET 6 INCHES	2ND 6 INCHES	3RD 6 INCHES	N VALUE	SAMPLE RECOVERY	CORE SIZE	RUN NUMBER	RUN LENGTH	RUN RECOVERY	RQD RECOVERY	PERCENT RECOVERY	RQD	DEPTH (FEET)	SAMPLE TYPE	ELEVATION (FEET)	GRAPHIC LOG	CLASSIFICATION OF MATERIALS	REMARKS
SPT	7	50/4"	-	-	50+	0								30		550			
														31		549			Bottom of boring @ 30.8'. Water level @ 13.6' @ completion of drilling. Boring backfilled w/ bentonite chips to 2.0'. Top filled w/gravel.
														32		548			
														33		547			
														34		546			
														35		545			
														36		544			
														37		543			
														38		542			
														39		541			
														40		540			
														41		539			
														42		538			
														43		537			
														44		536			
														45					

BLACK & VEATCH

BORING LOG

BORING NO. CT-E1

CLIENT	PROJECT	PROJECT NO.
Detroit Edison	Fermi 3 COL Application	147483

PROJECT LOCATION	COORDINATES	GROUND ELEVATION (DATUM)	TOTAL DEPTH
Monroe, MI	N 6061.8' E 4942.6'	579.9 ft (NAVD 88)	26.5 (feet)

SURFACE CONDITIONS	COORDINATE SYSTEM	DATE START	DATE FINISHED
Paved parking lot	Plant	08/23/07	08/23/07

LOGGED BY	CHECKED BY	APPROVED BY
Grainger	Dogbey/Bonnie TB	Meyer EM

SAMPLING								CORING									
SAMPLE TYPE	SAMPLE NUMBER	SET 6 INCHES	2ND 6 INCHES	3RD 6 INCHES	N VALUE	SAMPLE RECOVERY		CORE SIZE	RUN NUMBER	RUN LENGTH	RUN RECOVERY	RQD RECOVERY	PERCENT RECOVERY	RQD	DEPTH (FEET)	SAMPLE TYPE	ELEVATION (FEET)	GRAPHIC LOG	CLASSIFICATION OF MATERIALS	REMARKS
															0				COBBLES - About 60% angular, elongated to cubical, hard cobbles w/max. size 12"; about 25% fine to coarse, angular, hard gravel; about 10% fine to coarse, angular, hard sand; about 5% fines; light gray; moist; strong reaction w/HCl; homogeneous; (Fill).	Boring advanced w/vacuum excavation.
															1		579			
															2		578			
															3		577			
															4		576			
															5		575			
															6		574			
			6.0												6					Below 6.0' continued w/4" ID sonic continuous sampler w/ nominal 6" temporary steel casing advanced w/sampler. Discrete sample SC-1 collected from S1.
S	1						1.5								7		573			
															8		572			
															9		571			
															10		570			
			10.0												10					
															11		569			
															12		568			
S	2						3.0								13		567			
															14		566			
															15		565			

5/23/2008 10:40 AM DTE - Fermi 3 Geotech

BLACK & VEATCH

BORING LOG

BORING NO. CT-E1

CLIENT	PROJECT	PROJECT NO.
Detroit Edison	Fermi 3 COL Application	147483

PROJECT LOCATION	COORDINATES	GROUND ELEVATION (DATUM)	TOTAL DEPTH
Monroe, MI	N 6061.8' E 4942.6'	579.9 ft (NAVD 88)	26.5 (feet)

SURFACE CONDITIONS	COORDINATE SYSTEM	DATE START	DATE FINISHED
Paved parking lot	Plant	08/23/07	08/23/07

LOGGED BY	CHECKED BY	APPROVED BY
Grainger	Dogbey/Bonnie	Meyer

SAMPLING							CORING									
SAMPLE TYPE	SAMPLE NUMBER	SET 6 INCHES	2ND 6 INCHES	3RD 6 INCHES	N VALUE	SAMPLE RECOVERY	CORE SIZE	RUN NUMBER	RUN LENGTH	RUN RECOVERY	RQD RECOVERY	PERCENT RECOVERY	RQD	DEPTH (FEET)	ELEVATION (FEET)	CLASSIFICATION OF MATERIALS	REMARKS
														15		15.0	
										16.0				16	564	Lean CLAY (CL) - About 100% medium plasticity, medium toughness, no dilatancy, high dry strength fines; gray & brown, mottled; firm; moist; weak reaction w/HCl; homogeneous; trace fibrous material. fibrous material grades out @ 15.5'	Core barrel dropped in soft clay from 15.0-16.0'.
TW	3					1.6								17	563		Discrete sample SC-2 collected from S2.
														18	562		Set nominal 6" temporary steel casing to 16.0'.
																18.3	Below 16.0' advanced w/ NWJ rods & 4½" tricone bit using bentonite mud as drilling fluid.
SPT	4	7	7	11	18	1.3								19	561	Lean CLAY (CL) - About 90% medium plasticity, medium toughness, no dilatancy, high dry strength fines; about 10% fine to coarse, rounded, hard sand; brown; very stiff; moist; strong reaction w/HCl; homogeneous; (Glacial Till).	SPT performed w/D50 automatic hammer.
														20	560		PP = 3.25 TSF @ 18.0'.
														21	559		Lost drilling fluid return @ 18.0'.
																21.9	
TW	5					2.1								22	558	Lean CLAY with Sand (CL) - About 75% medium plasticity, medium toughness, no dilatancy, high dry strength fines; about 15% fine to coarse, rounded, hard sand; about 10% angular, fine to coarse, hard gravel; dark gray; hard; moist; strong reaction w/HCl; homogeneous; (Glacial Till).	
														23	557		TW-5 refusal @ 23.0'.
														24	556		PP > 4.5 TSF @ 23.0'.
														25	555		
SPT	6	50/ 0.2	-	-	50+	NR								26	554		Tricone bit refusal @ 26.5'.
														27	553		Bottom of boring @ 26.5'. Water level @ 7.6' @ completion of drilling. Boring caved @ 26.0'. Boring backfilled w/bentonite chips on 08/23/07 to 1.5' bgs then gravel to surface.
														28	552		
														29	551		
														30	550		

BLACK & VEATCH

BORING LOG

BORING NO. EB/TSC-C2

CLIENT	PROJECT	PROJECT NO.
Detroit Edison	Fermi 3 COL Application	147483

PROJECT LOCATION	COORDINATES	GROUND ELEVATION (DATUM)	TOTAL DEPTH
Monroe, MI	N 6579.3' E 4697.2'	581.4 ft (NAVD 88)	50.5 (feet)

SURFACE CONDITIONS	COORDINATE SYSTEM	DATE START	DATE FINISHED
Level, gravel surface/roadway	Plant	06/16/07	08/27/07

LOGGED BY	CHECKED BY	APPROVED BY
Grainger/Bonnie/Mass	Dogbey/Bonnie	Meyer

SAMPLING: SAMPLE TYPE	SAMPLE NUMBER	SET 6 INCHES	2ND 6 INCHES	3RD 6 INCHES	N VALUE	SAMPLE RECOVERY	CORING: CORE SIZE	RUN NUMBER	RUN LENGTH	RUN RECOVERY	RQD RECOVERY	PERCENT RECOVERY	RQD	DEPTH (FEET)	SAMPLE TYPE	ELEVATION (FEET)	GRAPHIC LOG	CLASSIFICATION OF MATERIALS	REMARKS
														0		581		Poorly graded GRAVEL with Cobbles (GP) - About 60% fine to coarse, angular, hard gravel w/max. size 3"; about 20% angular, elongated, hard cobbles w/max. size 12"; about 15% fine to coarse, angular, hard sand; about 5% fines; (Fill).	Boring advanced w/vacuum excavation.
														1		580			
														2		579			
														3		578			
														4		577			
										5.0				5		576		grades w/boulders @ 5.0'	Below 5.0' continued w/4" ID sonic continuous sampler w/ nominal 6" temporary steel casing advanced w/sampler.
S	1												5.0	6		575			
														7		574			
														8		573			
														9		572			
										10.0				10		571			
														11		570			
														12		569		12.0	
S	2												4.0	13		568		Lean CLAY (CL) - About 100% medium plasticity, medium toughness, no dilatancy, high dry strength fines; gray & brown; firm; moist; musty odor; no reaction w/HCl; homogeneous; (Lacustrine Deposit).	Discrete sample SC2 collected @ 13.5-13.8'.
														14		567			
														15					

BLACK & VEATCH

BORING LOG

BORING NO. EB/TSC-C2

CLIENT	PROJECT	PROJECT NO.
Detroit Edison	Fermi 3 COL Application	147483

PROJECT LOCATION	COORDINATES	GROUND ELEVATION (DATUM)	TOTAL DEPTH
Monroe, MI	N 6579.3' E 4697.2'	581.4 ft (NAVD 88)	50.5 (feet)

SURFACE CONDITIONS	COORDINATE SYSTEM	DATE START	DATE FINISHED
Level, gravel surface/roadway	Plant	06/16/07	08/27/07

LOGGED BY	CHECKED BY	APPROVED BY
Grainger/Bonnie/Mass	Dogbey/Bonnie	Meyer

SAMPLING: SAMPLE TYPE	SAMPLE NUMBER	SET 6 INCHES	2ND 6 INCHES	3RD 6 INCHES	N VALUE	SAMPLE RECOVERY	CORING: CORE SIZE	RUN NUMBER	RUN LENGTH	RUN RECOVERY	RQD RECOVERY	PERCENT RECOVERY	RQD	DEPTH (FEET)	ELEVATION (FEET)	CLASSIFICATION OF MATERIALS	REMARKS
										15.5				15	566		
TW	1					0.9								16	565	Lean CLAY (CL) - About 90% low plasticity, low toughness, no dilatancy, very high dry strength fines; about 10% fine to coarse, subrounded to angular, hard sand; brown; very soft; moist; weak organic (swampy) odor; strong reaction w/HCl; homogeneous; (Glacial Till).	Set nominal 6" temporary steel casing to 15.5'. Below 15.5' continued w/ NWJ rods & 4½" tricone bit using water as drilling fluid. SPT performed w/D-50 automatic hammer. PP = 4.5 TSF @ 17.5'. TV = 0.87 TSF @ 17.5'.
														17	564		
														18	563		
SPT	2	7	11	15	26	1.5								19	562	grades w/ trace fine, angular, hard gravel & wood fragments; brown & yellowish brown; very stiff; no odor; w/fine sand lenses	
														20	561		
										21.0				21	560		
TW	3	1.6				1.6								22	559	Lean CLAY (CL) - About 70% low plasticity, medium toughness, no dilatancy, high dry strength fines; about 25% fine to coarse, subrounded to angular, hard sand; about 5% fine, subangular to angular, hard gravel; dark gray & brown, mottled; hard; moist; strong reaction w/HCl; (Glacial Till).	TW3 could not be retrieved. Used sonic rig to retrieve tube. Sonic sample advanced from 22.6-24.0'. Water level @ 16.8' prior to drilling on 08/21/07.
			22.6											23	558		
S	4					1.4								24	557	grades w/subangular, very hard, dolomite cobbles w/ max. size 3.5" @ 22.6'	Discrete sample S4 collected @ 23.6-23.8'.
			24.0							25.0				25	556		Below 24.0' continued w/ NWJ rods & 4½" tricone bit using water as drilling fluid.
SPT	5	9	13	23	36	1.3								26	555	Lean CLAY with Sand (CL) - About 85% medium plasticity, medium toughness, no dilatancy, high dry strength fines; about 10% fine to coarse, subrounded to angular, hard sand; about 5% fine, subangular, hard gravel; dark gray; very hard; moist; strong reaction w/HCl; homogeneous; (Glacial Till).	
														27	554		
										27.5				28	553		
SPT	6	11	16	17	33	1.3								29	552	Clayey SAND (SC) - About 75% fine to coarse, subangular to angular, hard sand; about 25% medium plasticity, medium toughness, slow dilatancy, high dry strength fines; light olive brown; hard; wet; strong reaction w/HCl; grades courser w/ depth; (Glacial Till).	
			29.0							28.4				30			Tricone refusal @ 29.0'. Core box #1
S	7					1.5										Sandy Lean CLAY (CL) - About 65% medium plasticity, medium toughness, slow dilatancy, high dry strength fines; about 35% fine to coarse, angular,	

BLACK & VEATCH

BORING LOG

BORING NO. EB/TSC-C2

CLIENT	PROJECT	PROJECT NO.
Detroit Edison	Fermi 3 COL Application	147483

PROJECT LOCATION	COORDINATES	GROUND ELEVATION (DATUM)	TOTAL DEPTH
Monroe, MI	N 6579.3' E 4697.2'	581.4 ft (NAVD 88)	50.5 (feet)

SURFACE CONDITIONS	COORDINATE SYSTEM	DATE START	DATE FINISHED
Level, gravel surface/roadway	Plant	06/16/07	08/27/07

LOGGED BY	CHECKED BY	APPROVED BY
Grainger/Bonnie/Mass	Dogbey/Bonnie	Meyer

SAMPLING: SAMPLE TYPE	SAMPLE NUMBER	SET 6 INCHES	2ND 6 INCHES	3RD 6 INCHES	N VALUE	SAMPLE RECOVERY	CORING: CORE SIZE	RUN NUMBER	RUN LENGTH	RUN RECOVERY	RQD RECOVERY	PERCENT RECOVERY	RQD	DEPTH (FEET)	SAMPLE TYPE	ELEVATION (FEET)	GRAPHIC LOG	CLASSIFICATION OF MATERIALS	REMARKS
														30		551		hard sand; gray; hard; wet; strong reaction w/HCl, homogeneous; (Glacial Till).	starts @ 29.0'. Below 29.0' continued w/4" ID sonic continuous sampler w/ nominal 6" temporary steel casing advanced w/sampler. Set nominal 6" temporary steel casing to 30.5'. Below 30.5' continued w/ triple tube wire line core barrel w/diamond bit using water as drilling fluid. No drilling fluid return @ 34.0'. Core box #2 starts @ 35.5'.
																		28.8	
										30.5				31		550		DOLOMITE; gray; micritic; fresh; very strong; hard; highly fractured; (Bass Islands Group).	
																		30.5	
							PQ	1	5.0	5.0	2.3	100	46	32		549		DOLOMITE; grayish brown; micritic; fresh; strong; hard; (Bass Islands Group). 90°,J,T,No,No,Pl,SR @ 30.7-32.3' 0°,J,VN,Cl,Sp,Pl,SR @ 31.4' highly fractured @ 31.8-32.1' shale partings - 0°,B,VN,Pl,SR @ 32.3',33.5' 90°,J,T,No,No,Pl,SR @ 32.8-33.5' fractured @ 32.8-33.5'	
														33		548			
														34		547		0°,J,VN,No,Pl,SR @ 34.6'	
														35		546			
										35.5				36		545			
																		36.6	
							PQ	2	5.0	4.9	1.8	98	36	37		544		DOLOMITE; dark grayish brown; micritic; fresh; strong; hard; w/stylolites; (Bass Islands Group). highly fractured, clay filled @ 37.0-37.1' 70°-80°,J,T,No,No,Ir,R @ 37.1-37.8' some scattered vugs, anhydrite filled @ 37.6-38.5' 0°,B,VN,No,No,Pl,SR @ 37.8' fossils @ 37.8' shale partings - 0°,B,VN,Pl,SR @ 38.0', 38.8', 39.1', 39.2', 39.5', 39.6', 39.7', 39.8', 39.9' 10°,B,VN,No,No,Pl,SR @ 38.2' 90°,J,T,No,No,Pl,SR @ 38.6-39.1'	
														38		543			
														39		542			
																		39.1	
														40		541		DOLOMITE; grayish brown; micritic; fresh; strong; hard; w/stylolites; (Bass Islands Group).	
										40.5				41		540			
																		90°,J,T,No,No,Pl,SR @ 41.2-41.4', 42.0-42.7' 0°,B,VN,No,No,Pl,SR @ 41.2', 41.4' 42.0', 42.5', 42.7', 42.9', 43.4', 44.0' light brownish gray @ 41.6-42.1'	
														42		539			
																		42.9	
							PQ	3	5.0	5.0	3.8	100	76	43		538		DOLOMITE; light gray; micritic; fresh; strong; hard; w/stylolites; (Bass Islands Group).	
														44		537			Core box #3 starts @ 44.2'.
														45				shale parting - 0°,B,VN,Pl,SR @ 44.6'	

BLACK & VEATCH

BORING LOG

BORING NO. EB/TSC-C2

CLIENT	PROJECT	PROJECT NO.
Detroit Edison	Fermi 3 COL Application	147483

PROJECT LOCATION	COORDINATES	GROUND ELEVATION (DATUM)	TOTAL DEPTH
Monroe, MI	N 6579.3' E 4697.2'	581.4 ft (NAVD 88)	50.5 (feet)

SURFACE CONDITIONS	COORDINATE SYSTEM	DATE START	DATE FINISHED
Level, gravel surface/roadway	Plant	06/16/07	08/27/07

LOGGED BY	CHECKED BY	APPROVED BY
Grainger/Bonnie/Mass	Dogbey/Bonnie	Meyer

SAMPLING							CORING									
SAMPLE TYPE	SAMPLE NUMBER	SET 6 INCHES	2ND 6 INCHES	3RD 6 INCHES	N VALUE	SAMPLE RECOVERY	CORE SIZE	RUN NUMBER	RUN LENGTH	RUN RECOVERY	RQD RECOVERY	PERCENT RECOVERY	RQD	DEPTH (FEET)	SAMPLE TYPE	ELEVATION (FEET)	GRAPHIC LOG	CLASSIFICATION OF MATERIALS	REMARKS
														45		536		50°,J,VN,No,No,PI,SR @ 44.7-45.0'	
										45.5				46		535		shale partings - 0°,B,VN,PI,SR @ 46.0',47.8',48.1' fractured @ 46.0-46.2'	
														47		534		46.1 DOLOMITE; grayish brown; micritic; fresh; strong; hard; (Bass Islands Group). 0°,B,VN,No,No,PI,SR @ 46.2', 47.2' 60°,J,T,No,No,PI,SR @ 46.8-47.0', 46.8-46.9'	
PQ	4	5.0	4.8	2.7	96	54								48		533		shale parting @ 48.0'	
														49		532		48.1 DOLOMITE; gray; micritic; fresh; strong; hard; (Bass Islands Group). shale partings - 0°,B,VN,PI,S @ 48.65', 49.4' brecciated, healed @ 48.8-48.9' mottled @ 49.3-49.5' 55°,J,T,No,No,PI,SR @ 49.4'-49.5' grades w/stylolites @ 49.5' 40°,J,T,No,No,PI,SR @ 49.9-50.1' 90°,J,T,No,No,PI @ 50.0-50.5' grades mottled @ 50.1'	
														50		531			Bottom of boring @ 50.5'. Water level @ 14.45' @ completion of drilling. Boring caved @ 49.35'. Piezometer installed on 09/11/07.
														51		530			
														52		529			
														53		528			
														54		527			
														55		526			
														56		525			
														57		524			
														58		523			
														59		522			
														60					

BLACK & VEATCH

BORING LOG

BORING NO. EB/TSC-E3

CLIENT	PROJECT	PROJECT NO.
Detroit Edison	Fermi 3 COL Application	147483

PROJECT LOCATION	COORDINATES	GROUND ELEVATION (DATUM)	TOTAL DEPTH
Monroe, MI	N 6567.3' E 4819.5'	581.8 ft (NAVD 88)	130.5 (feet)

SURFACE CONDITIONS	COORDINATE SYSTEM	DATE START	DATE FINISHED
Paved street	Plant	08/21/07	08/23/07

LOGGED BY	CHECKED BY	APPROVED BY
Grainger/Mass	Dogbey/Mass	Meyer

SAMPLING: SAMPLE TYPE	SAMPLE NUMBER	SET 6 INCHES	2ND 6 INCHES	3RD 6 INCHES	N VALUE	SAMPLE RECOVERY	CORING: CORE SIZE	RUN NUMBER	RUN LENGTH	RUN RECOVERY	RQD RECOVERY	PERCENT RECOVERY	RQD	DEPTH (FEET)	ELEVATION (FEET)	CLASSIFICATION OF MATERIALS	REMARKS
														0	581	ASPHALT (0.3)	Boring advanced w/vacuum excavation.
														1		COBBLES - About 50% angular, elongated to rounded, very hard cobbles, max size 8"; about 25% fine to coarse, angular, elongated to rounded gravel, max. size 3"; about 15% fine to coarse, angular, hard sand; about 10% fines; gray; moist; strong reaction w/HCl; homogeneous; (Fill).	
														2	580		
														3	579		
														4	578		
														5	577		
														6	576		
S	1		6.0			2.5								7	575		Below 6.0' continued w/4" ID sonic continuous sampler w/ nominal 6" temporary steel casing advanced w/sampler. Discrete sample SC1 collected @ 8.0-8.2'.
														8	574		
														9	573		
														10	572		
S	2		10.0			5.0								11	571		
														12	570	(11.5) Lean CLAY (CL) - About 100% medium plasticity, medium toughness, no dilatancy, high dry strength fines; gray & brown, mottled; firm; moist; no reaction w/HCl; homogeneous; (Lacustrine Deposit).	
														13	569		Discrete sample SC2 collected @ 12.9-13.2'.
														14	568	dark gray, organic lean clay @ 14.0-15.0'	
														15	567		

BORING LOG

CLIENT	PROJECT	PROJECT NO.
Detroit Edison	Fermi 3 COL Application	147483

PROJECT LOCATION	COORDINATES	GROUND ELEVATION (DATUM)	TOTAL DEPTH
Monroe, MI	N 6567.3' E 4819.5'	581.8 ft (NAVD 88)	130.5 (feet)

SURFACE CONDITIONS	COORDINATE SYSTEM	DATE START	DATE FINISHED
Paved street	Plant	08/21/07	08/23/07

LOGGED BY	CHECKED BY	APPROVED BY
GEO for TB for Grainger/Mass	EB for TB for Dogbey/Mass	Em Meyer

SAMPLING								CORING									
SAMPLE TYPE	SAMPLE NUMBER	SET 6 INCHES	2ND 6 INCHES	3RD 6 INCHES	N VALUE	SAMPLE RECOVERY		CORE SIZE	RUN NUMBER	RUN LENGTH	RUN RECOVERY	RQD RECOVERY	PERCENT RECOVERY	RQD	DEPTH (FEET)	ELEVATION (FEET)	CLASSIFICATION OF MATERIALS	REMARKS
															15			
																	15.3	
TW	3					0.6									16	566	Lean CLAY (CL) - About 95% medium plasticity, medium toughness, no dilatancy, high dry strength fines; about 5% fine to medium sand; gray & grayish brown, mottled; hard; moist; weak reaction w/HCl; (Glacial Till).	Set nominal 6" temporary steel casing to 15.5'. Below 15.5' continued w/ NWJ rods & 4½" tricone bit using water as drilling fluid. SPT performed w/D-50 automatic hammer. PP = 4.0 TSF @ 17.5' TV = 0.6 TSF @ 17.5'
															17	565		
															18	564		
																563	grades brown and gray, banded; homogeneous	
SPT	4	6	7	11	18	1.5									19			
															20	562		
																	20.5	
															21	561	Sandy Lean CLAY (CL) - About 70% medium plasticity, medium toughness, no dilatancy, high dry strength fines; about 30% fine to coarse, subangular to angular, hard sand; light brownish gray; hard; moist; weak reaction w/HCl; homogeneous; (Glacial Till).	
TW	5					1.4									22	560		
															23	559		PP > 4.5 TSF @ 23.0' TV = 0.67 TSF @ 23.0'
																	23.5	
															24	558	Sandy Lean CLAY (CL) - About 60% medium plasticity, medium toughness, slow dilatancy, high dry strength fines; about 35% fine to coarse, subangular to angular, hard sand; about 5% fine, subangular, hard gravel; gray; very hard; moist; strong reaction w/ HCl; homogeneous; (Glacial Till).	
SPT	6	11	16	17	33	1.3									25	557		
															26	556		
																	26.0	
																	Clayey SAND (SC) - About 70% fine to coarse, subangular to angular, hard sand; about 30% medium plasticity, medium toughness, no dilatancy, high dry strength fines; trace fine to coarse, subangular, flat, hard gravel; grayish brown; medium dense; wet; strong reaction w/HCl; homogeneous; (Glacial Till).	Spoon blocked while taking SPT 7.
SPT	7	20	11	13	24	0.5									27	555		
															28	554		
			28.0														hydrocarbon odor @ 28.0-28.7'	Below 28.0' continued w/4" ID sonic continuous sampler w/ nominal 6" temporary steel
																	28.7	
															29	553	DOLOMITE; grayish brown, banded; very fine grained; fresh; very strong; hard; (Bass Islands Group).	
S	8					3.0									30	552		

BLACK & VEATCH

BORING LOG

BORING NO. EB/TSC-E3

CLIENT	PROJECT	PROJECT NO.
Detroit Edison	Fermi 3 COL Application	147483

PROJECT LOCATION	COORDINATES	GROUND ELEVATION (DATUM)	TOTAL DEPTH
Monroe, MI	N 6567.3' E 4819.5'	581.8 ft (NAVD 88)	130.5 (feet)

SURFACE CONDITIONS	COORDINATE SYSTEM	DATE START	DATE FINISHED
Paved street	Plant	08/21/07	08/23/07

LOGGED BY	CHECKED BY	APPROVED BY
Grainger/Mass (for TB for)	Dogbey/Mass (for TB for)	Meyer

SAMPLING							CORING									
SAMPLE TYPE	SAMPLE NUMBER	SET 6 INCHES	2ND 6 INCHES	3RD 6 INCHES	N VALUE	SAMPLE RECOVERY	CORE SIZE	RUN NUMBER	RUN LENGTH	RUN RECOVERY	RQD RECOVERY	PERCENT RECOVERY	RQD	DEPTH (FEET)	SAMPLE TYPE	ELEVATION (FEET)	GRAPHIC LOG	CLASSIFICATION OF MATERIALS	REMARKS
														30					casing advanced w/sampler.
										30.5								30.5	
														31		551		DOLOMITE; dark gray; pitted; micritic; fresh to slightly weathered; very strong; hard; w/stylolites in very closely spaced zones; (Bass Islands Group). highly fractured @ 30.8-31.7'	Core box #1 starts @ 28.0'. Sonic core S-8 stored in core box #1. Discrete sample SC3-A collected @ 28.2' for chemical anaylsis. Discrete sample SC3-B collected @ 28.3' for chemical analysis. Below 30.5' continued w/ triple tube wire line core barrel w/diamond bit using water as drilling fluid. Partial core loss @ 30.8-31.7'.
														32		550			
HQ	1	5.0	4.6	3.1	92	62								33		549		20°,J,Cl,Pa,Pl,SR @ 32.7' 20°,J,Cl,Pa,Ir,SR @ 33.0-33.1'	
																		33.6	
														34		548		DOLOMITE; argillaceous; grayish brown; fresh; very strong; hard; w/thin shale partings; (Bass Islands Group). 0°,B,Cl,Fi,Pl,SR @ 33.6'	
														35		547			
										35.5									
														36		546		vuggy @ 36.1-36.2'	
																		stylolites @ 36.5-39.4'	
														37		545		0°,B,UK,Fi,Pl,SR @ 36.6', 37.7' 90°,J,No,No,Pl,SR @ 36.6-36.7', 37.6-37.7' shale partings - 0°,B,Pl,SR @ 36.7',36.9',37.4',37.5', 38.6', 39.4'	
HQ	2	5.0	5.0	4.0	100	80								38		544		80°,J,T,Pl @ 37.0-37.4' closely to very closely spaced stylolites @ 37.9-38.3'	
														39		543		90°,J,VC,WA @ 38.9-39.4'	
																		90°,J,No,No,Pl,SR @ 39.5-39.8', 39.9-40.4'	
														40		542		90°,J,T,WA @ 39.6-40.4'	
																		40.2	
										40.5				41		541		DOLOMITE; grayish brown, banded; micritic; fresh to slightly weathered; very strong; very hard; w/shale partings; (Bass Islands Group). closely spaced stylolites @ 40.5-40.9' highly fractured @ 40.5-40.6'	
														42		540		80°,J,UK,Fi,Ir,SR @ 40.9-42.3' 0°,B,No,No,Pl,SR @ 40.9' 60°,J,No,No,Pl,SR @ 41.5-41.8' 90°,J,No,No,Pl,SR @ 41.6-42.0'	
HQ	3	5.0	4.9	1.6	98	32								43		539		70°,J,No,No,Pl,SR @ 43.1-43.9'	
														44		538		0°,J,UK,Fi,Pl,SR @ 43.6', 43.7', 44.2' lean clay parting - about 100% medium plasticity, medium toughness, no dilatancy fines; white; soft; moist; strong reaction w/HCl; slight hydrocarbon odor; homogeneous @ 43.9'	Core box #2 starts @ 43.9'.
														45		537			

BLACK & VEATCH

BORING LOG

BORING NO. EB/TSC-E3

CLIENT	PROJECT	PROJECT NO.
Detroit Edison	Fermi 3 COL Application	147483

PROJECT LOCATION	COORDINATES	GROUND ELEVATION (DATUM)	TOTAL DEPTH
Monroe, MI	N 6567.3' E 4819.5'	581.8 ft (NAVD 88)	130.5 (feet)

SURFACE CONDITIONS	COORDINATE SYSTEM	DATE START	DATE FINISHED
Paved street	Plant	08/21/07	08/23/07

LOGGED BY	CHECKED BY	APPROVED BY
Grainger/Mass	Dogbey/Mass	Meyer

SAMPLING							CORING									
SAMPLE TYPE	SAMPLE NUMBER	SET 6 INCHES	2ND 6 INCHES	3RD 6 INCHES	N VALUE	SAMPLE RECOVERY	CORE SIZE	RUN NUMBER	RUN LENGTH	RUN RECOVERY	RQD RECOVERY	PERCENT RECOVERY	RQD	DEPTH (FEET)	SAMPLE TYPE	ELEVATION (FEET)	GRAPHIC LOG	CLASSIFICATION OF MATERIALS	REMARKS
														45					
										45.5								0°,J,No,No,Pl,SR @ 45.3' 40°,J,No,No,Pl,SR @ 45.3-45.5' lean clay parting - about 100% medium plasticity, medium toughness, no dilatancy fines; white; soft; moist; strong reaction w/HCl; slight hydrocarbon odor; homogeneous @ 45.7' 0°,J,Cl,Fi,Pl,SR @ 46.0' pitted @ 46.2-46.7'	
														46		536			
														47		535			
																		46.3 DOLOMITE; light gray, banded; micritic; fresh; very strong; hard; widely spaced stylolites; (bands bedding parallel); (Bass Islands Group). 0°,J,Cl,Fi,Pl,SR @ 46.6' bands @ 20° @ 46.8-48.7' 75°,J,No,No,Pl,SR @ 47.8-48.2'	
HQ	4	5.0	5.0	1.4	100	28								48		534			
														49		533			
																		48.7 DOLOMITE; olive gray; pitted; micritic; slightly weathered; strong; hard; w/trace fossils (mollusks) & widely spaced stylolites; (Bass Islands Group). shale band; black; platy; very fine grained; fresh; strong; hard; weathered contact w/surrounding dolomite @ 49.0-49.2' 85°,J,N to MW,No,No,Pl,SR @ 49.2-50.0' 0°,J,Cl,Fi,Pl,SR @ 49.7' 20°,J,MW,WA @ 51.0-51.2' 0°,J,UK,Pa,Ir,Slk (vertically oriented slickensides) @ 51.0-51.2' 0°,B,UK,Fi,Pl,SR @ 51.0', 52.5', 52.6' shale partings - 0°,B,Pl,SR @ 51.2',51.7'	Water level @ 15.0' prior to drilling on 08/23/07.
														50		532			
										50.5									
														51		531			
														52		530			
HQ	5	5.0	5.0	4.7	100	94								53		529			
														54		528		closely spaced stylolites @ 53.8-54.5'	
														55		527			
																		54.9 DOLOMITE; light brownish gray; pitted; micritic to fine grained; fresh to slightly weathered; strong; medium bedded; healed fractures weathered out to form pits; fine grained sections possibly oolitic; (Bass Islands Group).	
										55.5				56		526			
														57		525			
HQ	6	5.0	4.6	3.9	92	78								58		524		argillaceous limestone @ 57.8-58.0'	
														59		523		0°,B/J,anhydrite,Pa,Pl,R @ 58.5'; joint has anhydrite crystals 0.4-1.2" diameter argillaceous limestone; very fine grained (crystalline); fresh; strong; very hard; strong reaction w/HCl on fresh surface @ 58.5-58.8'	Drill chatter @ 59.5'.
														60		522			

BLACK & VEATCH

BORING LOG

BORING NO. EB/TSC-E3

CLIENT	PROJECT	PROJECT NO.
Detroit Edison	Fermi 3 COL Application	147483

PROJECT LOCATION	COORDINATES	GROUND ELEVATION (DATUM)	TOTAL DEPTH
Monroe, MI	N 6567.3' E 4819.5'	581.8 ft (NAVD 88)	130.5 (feet)

SURFACE CONDITIONS	COORDINATE SYSTEM	DATE START	DATE FINISHED
Paved street	Plant	08/21/07	08/23/07

LOGGED BY	CHECKED BY	APPROVED BY
Grainger/Mass	Dogbey/Mass	Meyer

SAMPLING: SAMPLE TYPE	SAMPLE NUMBER	SET 6 INCHES	2ND 6 INCHES	3RD 6 INCHES	N VALUE	SAMPLE RECOVERY

CORING: CORE SIZE	RUN NUMBER	RUN LENGTH	RUN RECOVERY	RQD RECOVERY	PERCENT RECOVERY	RQD
HQ	7	5.0	5.0	1.8	100	36
HQ	8	5.0	5.0	3.0	100	60
HQ	9	5.0	5.0	3.3	100	66

DEPTH (FEET)	SAMPLE TYPE	ELEVATION (FEET)	GRAPHIC LOG	CLASSIFICATION OF MATERIALS	REMARKS
60				90°,J,MW,anhydrite,Fi,Pl @ 58.8-59.2'	Core box #3 starts @ 59.6'.
				80°,J,N,anhydrite,Fi,Pl @ 59.0-59.5'	
				grayish brown, banded; w/shale partings @ 59.8-60.1'	
				60.5	
61		521		DOLOMITE; gray; micritic to very fine grained; fresh; very strong; very hard; (Bass Islands Group).	
				dolomite & dolomitic shale band; gray & dark gray, mottled; very fine grained; fresh strong; very hard @ 61.4-61.5'	
62		520		10°,B,UK,Fi,Pl,R @ 61.4'	
				lean clay band - about 100% medium plasticity, medium toughness, slow dilatancy fines; white; soft; moist; hydrocarbon odor; strong reaction w/HCl; homogeneous @ 61.5-61.6'	
63		519		61.6	
				DOLOMITE; oolitic; light brownish gray; medium to coarse grained; fresh; strong; very hard; oolites approximately 0.02-0.04"; (Bass Islands Group).	
64		518		90°,J,VN,WA @ 61.6-63.5'	
				70°,J,Ca,Fi,Pl,SR @ 63.3-63.5'	
65		517		90°,J,No,No,Pl,SR @ 63.3-64.4'	
				65.5	
66		516		DOLOMITE; brecciated (healed); argillaceous; light gray & gray, banded; micritic; fresh; very strong; hard; w/black; micritic; fresh; strong; hard; shale partings; (Bass Islands Group).	
				dolomitic shale; light gray & dark gray, mottled; very fine grained; fresh; strong; very hard @ 65.5-65.8'	
67		515		claystone band; very dark gray; fresh; strong; hard; laminated @ 65.8-65.9'	
				10°,J,T,Ca,Fi,Pl @ 65.9'	
68		514		shale parting - 0°,B,Ir,R @ 67.3'	
				67.8	
69		513		claystone parting; very dark gray; fresh; strong; hard; laminated @ 67.8'	
				DOLOMITE; light brownish gray; micritic; fresh; strong; very hard; banded w/black; fresh; very strong; hard; shale partings & bands; (Bass Islands Group).	
70		512		bands @ 40° @ 68.0-68.5'	
				bands @ 0° @ 68.5-70.0'	
				lean clay parting - about 100% medium plasticity, medium toughness, no dilatancy fines; gray; moist; hydrocarbon odor; strong reaction w/HCl; homogeneous @ 68.7-68.8'	
71		511		50°,J,Ca,Fi,Pl,SR @ 69.0-69.3'	
				shale partings - 0°,B,Pl,SR @ 69.2', 69.6', 69.9'	
72		510		gray; banding less pronounced; fewer shale partings @ 70.0-73.5'	
				70°,J,Ca/Cl,Pa,Pl,SR @ 70.2-70.5'	Core box #4 starts @ 72.5'.
73		509		150°,J,Cl,Pa,Pl,SR @ 70.3-70.4'	
				fat clay - about 100% high plasticity, medium toughness, slow dilatancy fines; white; moist; slight hydrocarbon odor; strong reaction w/HCl; homogeneous @ 71.3-71.6'	
74		508		10°,J,No,No,Pl,SR @ 71.9', 72.0', 72.5'	
				pitted @ 72.8-73.5'	
75		507		73.5	
				DOLOMITE; oolitic; light brownish gray; pitted; very	

BLACK & VEATCH

BORING LOG

BORING NO. EB/TSC-E3

CLIENT	PROJECT	PROJECT NO.
Detroit Edison	Fermi 3 COL Application	147483

PROJECT LOCATION	COORDINATES	GROUND ELEVATION (DATUM)	TOTAL DEPTH
Monroe, MI	N 6567.3' E 4819.5'	581.8 ft (NAVD 88)	130.5 (feet)

SURFACE CONDITIONS	COORDINATE SYSTEM	DATE START	DATE FINISHED
Paved street	Plant	08/21/07	08/23/07

LOGGED BY	CHECKED BY	APPROVED BY
Grainger/Mass	Dogbey/Mass	Meyer

SAMPLING: SAMPLE TYPE	SAMPLE NUMBER	SET 6 INCHES	2ND 6 INCHES	3RD 6 INCHES	N VALUE	SAMPLE RECOVERY

CORING: CORE SIZE	RUN NUMBER	RUN LENGTH	RUN RECOVERY	RQD RECOVERY	PERCENT RECOVERY	RQD
HQ	10	5.0	5.0	2.3	100	46
HQ	11	5.0	5.0	1.6	100	32
HQ	12	5.0	5.0	2.0	100	40

DEPTH (FEET)	SAMPLE TYPE	ELEVATION (FEET)	GRAPHIC LOG	CLASSIFICATION OF MATERIALS	REMARKS
75				fine to fine grained; fresh; very strong; hard w/closely to moderately wide spaced stylolites; (Bass Islands Group).	
				30°,J,No,No,Pl,SR @ 73.5-73.7'	
				0°,J,No,No,Pl,SR @ 73.5'	
76		506		micritic to very fine grained @ 75.5-82.9'	
				50°,J,Ca,Pa,Pl,SR @ 76.9-77.2'	
77		505			
				80°,J,No,No,Pl,SR @ 77.5-77.9'	
78		504			
				0°,B/J,Cl,Fi,Ir,R @ 78.7-78.8'	
79		503		60°,J,No,No,Pl,SR @ 79.0-79.5'	
				0°,B,No,No,Pl,SR @ 79.8', 80.7'	
80		502		80°,J,No,No,Pl,SR @ 80.0-80.9'	
				highly fractured @ 80.9-81.0'	
81		501		80°,J,No,No,Pl,SR @ 81.0-82.9'	
82		500			
				grades brecciated (healed) @ 82.6-82.9'	
83		499		20°,J,Cl,Pa,Pl,SR @ 82.7'	
				82.9	
				DOLOMITE; light gray; micritic; fresh; very strong; hard; w/moderately wide spaced stylolites; (Bass Islands Group).	
84		498			
				shale partings & bands - 0°,B,Pl,SR @ 84.0-88.4'	
85		497		90°,J,No,No,Pl,SR @ 84.8-85.2'	Drill chatter @ 85.0-85.5'.
86		496		0°,B,No,No,Pl,SR @ 86.3'	Core box #5 starts @ 86.0'.
87		495			
88		494		brecciated (healed); gray; very fine grained @ 88.0-88.5'	
				80°,J,Cl,Pa,Pl,SR @ 88.2-88.3'	
89		493		60°,J,Cl,Pa,Pl,SR @ 88.4-88.5'	
				dolomite & dolomitic shale; greenish gray & gray, mottled; fresh; very strong; hard @ 88.5-88.9'	
90		492		60°,J,UK,Pa,Pl,Slk @ 88.5-88.8'	
				88.9	

BLACK & VEATCH

BORING LOG

BORING NO. EB/TSC-E3

CLIENT	PROJECT	PROJECT NO.
Detroit Edison	Fermi 3 COL Application	147483

PROJECT LOCATION	COORDINATES	GROUND ELEVATION (DATUM)	TOTAL DEPTH
Monroe, MI	N 6567.3' E 4819.5'	581.8 ft (NAVD 88)	130.5 (feet)

SURFACE CONDITIONS	COORDINATE SYSTEM	DATE START	DATE FINISHED
Paved street	Plant	08/21/07	08/23/07

LOGGED BY	CHECKED BY	APPROVED BY
Grainger/Mass	Dogbey/Mass	Meyer

SAMPLING							CORING									
SAMPLE TYPE	SAMPLE NUMBER	SET 6 INCHES	2ND 6 INCHES	3RD 6 INCHES	N VALUE	SAMPLE RECOVERY	CORE SIZE	RUN NUMBER	RUN LENGTH	RUN RECOVERY	RQD RECOVERY	PERCENT RECOVERY	RQD	DEPTH (FEET)	SAMPLE TYPE	ELEVATION (FEET)

GRAPHIC LOG	CLASSIFICATION OF MATERIALS	REMARKS
	SHALE; dark gray; very fine grained; fissile; fresh; strong; moderately hard; (Bass Islands Group). 0°,B,No,No,Pl,SR @ 89.2' highly fractured @ 89.5-89.7'	
	89.7 DOLOMITE; argillaceous; dark grayish brown; micritic; slightly weathered; strong; hard; grades downward from shale; (Bass Islands Group). 80°,J,anhydrite,Pa,Pl,SR @ 90.0-90.3' 160°,J,anhydrite,Pa,Pl,SR @ 90.0'	Core loss in fractured zones.
	90.3 DOLOMITE; grayish brown; very fine grained (crystalline); fresh; very strong; hard; trace shale partings; (Bass Islands Group). highly fractured w/clay @ 90.5-90.9', 94.0-94.2' 90°,J,No,Pl,SR @ 91.0-91.4' highly fractured @ 92.0-92.6' 60°,J,Cl,Fi,Pl,SR @ 92.5-92.9' brecciated (healed) @ 92.8-92.9', 93.2-93.3', 93.5-93.6' 0°,B,Cl,Fi,Pl,SR @ 93.0'	
	94.2 DOLOMITE; argillaceous; light brownish gray; very fine grained (crystalline); fresh; strong; hard; (Bass Islands Group). 0°,B,No,No,Pl,SR @ 97.2' 60°,J,Cl,Pa,Pl,SR @ 97.6-97.8' highly fractured @ 98.4-98.5'	Core loss @ 95.5-96.0'.
	98.7 DOLOMITE; gray & light brownish gray, banded; micritic; fresh; very strong; hard; w/shale partings; dark gray bands parallel to bedding; (Bass Islands Group). convoluted bands (not parallel) @ 98.7-99.8' highly fractured @ 99.5-99.7' shale partings - 0°,B,Pl,SR @ 100.0',100.7',101.1' highly fractured w/clay @ 101.3-101.4' highly fractured w/clay @ 102.2-102.3', 102.5-102.7', 103.2-103.3' 90°,J,Cl,Pa,Pl,S @ 102.3-102.5' shale partings - 0°,B,Pl,SR @ 103.2', 103.3' 0.05' thick shale parting @ 103.2'	Core loss in fractured zones.
	103.3 DOLOMITE; argillaceous; dark gray; micritic; fresh; strong; hard; (Bass Islands Group). shale partings - 0°,B,Pl,SR @ 103.6'(2),104.1',104.2', 104.3',104.4'	

			90.5											90		491
HQ	13	5.0	4.8	2.3	96	46								91		490
			95.5											92		489
HQ	14	5.0	4.5	2.2	90	44								93		488
			100.5											94		487
HQ	15	5.0	4.5	0.7	90	14								95		486
														96		485
														97		484
														98		483
														99		482
														100		481
														101		480
														102		479
														103		478
														104		477
														105		

BLACK & VEATCH

BORING LOG

BORING NO. EB/TSC-E3

CLIENT	PROJECT	PROJECT NO.
Detroit Edison	Fermi 3 COL Application	147483

PROJECT LOCATION	COORDINATES	GROUND ELEVATION (DATUM)	TOTAL DEPTH
Monroe, MI	N 6567.3' E 4819.5'	581.8 ft (NAVD 88)	130.5 (feet)

SURFACE CONDITIONS	COORDINATE SYSTEM	DATE START	DATE FINISHED
Paved street	Plant	08/21/07	08/23/07

LOGGED BY	CHECKED BY	APPROVED BY
Grainger/Mass	Dogbey/Mass	Meyer

SAMPLING: SAMPLE TYPE	SAMPLE NUMBER	SET 6 INCHES	2ND 6 INCHES	3RD 6 INCHES	N VALUE	SAMPLE RECOVERY

CORING: CORE SIZE	RUN NUMBER	RUN LENGTH	RUN RECOVERY	RQD RECOVERY	PERCENT RECOVERY	RQD
			105.5			
HQ	16	5.0	5.0	2.2	100	44
			110.5			
HQ	17	5.0	5.0	2.7	100	54
			115.5			
HQ	18	5.0	5.0	4.0	100	80

DEPTH (FEET)	SAMPLE TYPE	ELEVATION (FEET)	GRAPHIC LOG	CLASSIFICATION OF MATERIALS	REMARKS
105				90°,J,Ca,Pa,Pl,SR @ 103.3-103.5', 103.6-104.1', 104.4-104.9' highly fractured w/clay @ 104.3-104.4'	
				-105.5-	Core box #6 starts @ 105.5'.
106		476		DOLOMITE; gray; very fine grained (crystalline); fresh to slightly weathered; strong; hard; w/very widely spaced stylolites; (Bass Islands Group). 30°,J,Ca,Fi,Pl,SR @ 106.3-106.4'	
107		475		0°,B,Ca,Fi,Pl,SR @ 106.8',107.0' highly fractured @ 107.3-107.4'	
108		474		0°,B,Ca,Fi,Pl,SR @ 108.0',108.1',108.7'	
109		473		90°,J,No,No,Pl,SR @ 108.8-109.0'	
110		472		10°,B/J,Ca/UK,Fi,Pl,SR @ 109.0' 0°,B,Ca/Cl,Fi,Pl,SR @ 109.4', 109.7' 90°,J,Ca,Pa,Pl,SR @ 109.4-110.1', 110.0-110.4' 80°,J,Ca,Pa,Pl,SR @ 109.7-109.9' 50°,J,Ca,Fi,Pl,SR @ 110.0-110.2'	
				-110.5-	
111		471		DOLOMITE; light gray; very fine to fine grained (crystalline); fresh; very strong; very hard; (Bass Islands Group). 20°,J,Ca,Fi,Pl,SR @ 111.1-111.2'	
112		470		highly fractured w/clay @ 111.3-111.4' 0°,J,No,No,Ir,SR @ 111.8' 70°,J,No,No,Pl,SR @ 111.8-112.2'	
113		469		lean clay band - about 100% medium plasticity, medium toughness, no dilatancy fines; firm; moist; slight hydrocarbon odor; strong reaction w/HCl; homogeneous @ 113.1-113.2'	
				-113.3-	
114		468		DOLOMITE; light gray; micritic; fresh; very strong; hard; (Bass Islands Group). 70°,J,No,No,Pl,SR @ 113.9-114.2'	
115		467		-114.4-	Core box #7 starts @ 115.2'.
116		466		DOLOMITE; argillaceous; brecciated (healed); grayish brown; micritic; fresh; strong; hard; banded; w/stylolites; brecciated zones filled w/very dark gray; fresh; strong; hard; shale & w/pyrite; (Bass Islands Group). highly fractured w/clay @ 114.8-114.9' 90°,J,No,No,WA,SR @ 114.9-115.2'	
				-116.2-	
117		465		DOLOMITE; light brownish gray; pitted; micritic; slightly weathered; strong; hard; (Bass Islands Group). 30°,J,No,No,Pl,S @ 117.5-117.8' 70°,J,Ca,Pa,Pl,SR @ 118.2-118.7'	
118		464		shale parting - 0°,B,Pl,SR @ 118.3' 130°,J,Ca,Fi,Pl,SR @ 118.7-118.8'	
				-119.0-	
119		463		DOLOMITE; argillaceous; dark grayish brown; micritic; fresh; very strong; hard; (Bass Islands	
120		462			

BLACK & VEATCH

BORING LOG

BORING NO. EB/TSC-E3

CLIENT	PROJECT	PROJECT NO.
Detroit Edison	Fermi 3 COL Application	147483

PROJECT LOCATION	COORDINATES	GROUND ELEVATION (DATUM)	TOTAL DEPTH
Monroe, MI	N 6567.3' E 4819.5'	581.8 ft (NAVD 88)	130.5 (feet)

SURFACE CONDITIONS	COORDINATE SYSTEM	DATE START	DATE FINISHED
Paved street	Plant	08/21/07	08/23/07

LOGGED BY Grainger/Mass (TB for) | CHECKED BY Dogbey/Mass (TB for) | APPROVED BY Meyer

SAMPLING: SAMPLE TYPE	SAMPLE NUMBER	SET 6 INCHES	2ND 6 INCHES	3RD 6 INCHES	N VALUE	SAMPLE RECOVERY	CORING: CORE SIZE	RUN NUMBER	RUN LENGTH	RUN RECOVERY	RQD RECOVERY	PERCENT RECOVERY	RQD	DEPTH (FEET)	SAMPLE TYPE	ELEVATION (FEET)	GRAPHIC LOG	CLASSIFICATION OF MATERIALS	REMARKS
														120				Group).	
										120.5						461			
														121				0°,B,Cl,Fi,Pl,SR @ 121.1',121.2'	
																460		20°,J,anhydrite,Fi,Pl,SR @ 121.6'	
														122				highly fractured @ 122.4-122.6'	
																459		122.6	
							HQ	19	5.0	3.5	0.4	70	8	123				DOLOMITE; argillaceous; & SHALE; dolomitic; olive brown, dark gray & black, banded; micritic; slightly weathered; strong; hard; (Salina Group - Unit F). highly fractured @ 123.0-124.1'	
																458			
														124					Core loss @ 124.1-125.5'.
																457			
														125					
										125.5						456			Core loss throughout 125.5-128.7'.
														126					
																455			
														127					
							HQ	20	5.0	1.8	0.0	36	0			454			
														128					
																453		claystone; dark gray; highly weathered; weak; low hardness; properties comparable to high plasticity, low toughness, no dilatancy fines soil; moist @ 128.7-129.1'	
														129				highly fractured @ 129.1-129.5'	
																452		shale partings - 0°,B,Ca,Pa,Pl,SR @ 129.5', 129.9', 130.0' (2), 130.2'	
														130				80°,J,Cl,Pa,Pl,SR @ 130.3-130.4'	
																451			Bottom of boring @ 130.5'; Water level @ 16.7' @ completion of drilling. Backfilled w/ bentonite chips to 2' & backfilled w/gravel to surface on 09/12/07.
														131					
																450			
														132					
																449			
														133					
																448			
														134					
																447			
														135					

BLACK & VEATCH

BORING LOG

BORING NO. FO-E1

SHEET 1 OF 10

CLIENT	PROJECT	PROJECT NO.
Detroit Edison	Fermi 3 COL Application	147483

PROJECT LOCATION	COORDINATES	GROUND ELEVATION (DATUM)	TOTAL DEPTH
Monroe, MI	N 6490.2' E 4915.0'	581.2 ft (NAVD 88)	130.3 (feet)

SURFACE CONDITIONS	COORDINATE SYSTEM	DATE START	DATE FINISHED
Gravel street	Plant	08/22/07	08/26/07

LOGGED BY	CHECKED BY	APPROVED BY
Grainger/Mass	Dogbey/Mass	Meyer

SAMPLING: SAMPLE TYPE	SAMPLE NUMBER	SET 6 INCHES	2ND 6 INCHES	3RD 6 INCHES	N VALUE	SAMPLE RECOVERY	CORING: CORE SIZE	RUN NUMBER	RUN LENGTH	RUN RECOVERY	RQD RECOVERY	PERCENT RECOVERY	RQD	DEPTH (FEET)	SAMPLE TYPE	ELEVATION (FEET)	GRAPHIC LOG	CLASSIFICATION OF MATERIALS	REMARKS
														0		581		COBBLES - About 60% angular, cubical to elongated, hard cobbles, w/max. size 8"; about 25% fine to coarse, angular, hard gravel; about 10% fine to coarse, angular, hard sand; about 5% fines; gray; moist; strong reaction w/HCl; homogeneous; (Fill).	Boring advanced w/vacuum excavation.
														1		580			
														2		579			
														3		578			
														4		577			
										5.0				5		576			Below 5.0' continued w/4" ID sonic continuous sampler w/ nominal 6" temporary steel casing advanced w/sampler.
S	1					3.0								6		575			
														7		574			
														8		573			
														9		572			Discrete sample SC1 collected @ 8.9-9.2'.
										10.0				10		571			
														11		570			
														12		569			
S	2					3.5								13		568		12.8 Lean CLAY (CL) - About 100% medium plasticity, medium toughness, no dilatancy, high dry strength fines; gray & yellowish brown, mottled; soft; moist; swampy odor; no reaction w/HCl; homogeneous; (Lacustrine Deposit).	
														14		567			Discrete sample SC2 collected @ 14.0-14.2'.
														15					

BLACK & VEATCH

BORING LOG

BORING NO. FO-E1

CLIENT	PROJECT	PROJECT NO.
Detroit Edison	Fermi 3 COL Application	147483

PROJECT LOCATION	COORDINATES	GROUND ELEVATION (DATUM)	TOTAL DEPTH
Monroe, MI	N 6490.2' E 4915.0'	581.2 ft (NAVD 88)	130.3 (feet)

SURFACE CONDITIONS	COORDINATE SYSTEM	DATE START	DATE FINISHED
Gravel street	Plant	08/22/07	08/26/07

LOGGED BY	CHECKED BY	APPROVED BY
GCO for TB for Grainger/Mass	EM for TB for Dogbey/Mass	EM Meyer

SAMPLING: SAMPLE TYPE	SAMPLE NUMBER	SET 6 INCHES	2ND 6 INCHES	3RD 6 INCHES	N VALUE	SAMPLE RECOVERY	DEPTH (FEET)	ELEVATION (FEET)	CLASSIFICATION OF MATERIALS	REMARKS
							15	566		
			15.5							Set nominal 6" temporary steel casing to 15.5'. Below 15.5' continued w/NWJ rods & 4½" tricone bit using bentonite mud as drilling fluid.
TW	3					1.5	16	565		
							17	564		
							18	563	18.2	PP = 3.5 TSF @ 17.5'.
SPT	4	3	4	9	13	1.5	19	562	Lean CLAY (CL) - About 90% medium plasticity, medium toughness, no dilatancy, high dry strength fines; about 10% fine to coarse, rounded to subangular, hard sand; brown; firm; moist; strong reaction w/HCl; homogeneous; (Glacial Till).	
							20	561		
TW	5					1.4	21	560		
							22	559		PP = 3.3 TSF @ 21.7'.
							23	558	23.0	
							24	557	Lean CLAY with Gravel (CL) - About 75% medium plasticity, medium toughness, no dilatancy fines; about 15% fine to coarse, angular, micritic, dolomite hard gravel; about 10% fine to coarse, angular, hard sand; gray; hard; moist; strong reaction w/HCl; homogeneous; trace cobbles; (Glacial Till).	
SPT	6	50/5"	-	-	50+	0.4	25	556		Drill chatter @ 23.0'.
							26	555		
							27	554		
							28	553		
			28.5						28.5	Tricone refusal @ 28.5'. Below 28.5' continued w/4" ID sonic continuous
S	7					1.5	29	552	DOLOMITE; massive; crystalline; gray; micritic; slightly weathered; very strong; hard; highly fractured; (Bass Islands Group).	
							30			

7/11/2008 4:07 DTE - Fermi 3 Geotech

BLACK & VEATCH

BORING LOG

BORING NO. FO-E1

CLIENT	PROJECT	PROJECT NO.
Detroit Edison	Fermi 3 COL Application	147483

PROJECT LOCATION	COORDINATES	GROUND ELEVATION (DATUM)	TOTAL DEPTH
Monroe, MI	N 6490.2' E 4915.0'	581.2 ft (NAVD 88)	130.3 (feet)

SURFACE CONDITIONS	COORDINATE SYSTEM	DATE START	DATE FINISHED
Gravel street	Plant	08/22/07	08/26/07

LOGGED BY	CHECKED BY	APPROVED BY
Grainger/Mass	Dogbey/Mass	Meyer

SAMPLING: SAMPLE TYPE	SAMPLE NUMBER	SET 6 INCHES	2ND 6 INCHES	3RD 6 INCHES	N VALUE	SAMPLE RECOVERY

CORING: CORE SIZE	RUN NUMBER	RUN LENGTH	RUN RECOVERY	RQD RECOVERY	PERCENT RECOVERY	RQD
HQ	1	5.0	4.5	0.0	90	0
HQ	2	5.0	5.0	3.6	100	72
HQ	3	5.0	4.8	2.0	96	40

DEPTH (FEET) | SAMPLE TYPE | ELEVATION (FEET) | GRAPHIC LOG

CLASSIFICATION OF MATERIALS

30.5

DOLOMITE; argillaceous; dark gray; micritic; fresh to slightly weathered; very strong; very hard; highly fractured; (Bass Islands Group).
highly fractured @ 30.5-30.9', 32.9-33.1', 33.5-33.8'
0°,B,No,No,PI,SR to R @ 31.2', 31.3', 31.4', 31.7', 32.1', 32.2', 32.5', 32.7', 32.9', 33.1', 33.3', 34.1', 34.5'
90°,J,Ca,Pa,PI,SR @ 31.3-32.5'

90°,J,No,No,PI,SR @ 32.7-35.2'

90°,J,No,No,WA,SR @ 33.1-33.5'

brecciated @ 33.6-33.7'
gray, trace stylolites @ 33.7-34.8'

0°,B,UK,Fi,PI,SR to R @ 35.6', 35.8', 35.9', 36.0'
very closely spaced stylolites @ 35.6-37.3'

grades light brownish gray; w/shale partings @ 36.5'
0°,B,Cl,Pa,PI,SR @ 36.6'

15°,J,Cl,Pa,PI,SR @ 37.8'

38.3

DOLOMITE; argillaceous; olive gray; micritic; fresh to slightly weathered; strong; hard; w/stylolites; (Bass Islands Group).
banded @ 38.3-39.3'
90°,J,T,PI @ 38.5-40.5', 39.0-40.5'
0°,B,UK,Fi,PI,SR to R @ 39.0', 39.6'
80°,J,Cl,Fi,PI,SR @ 39.8'
0°,J,Ca,Pa,PI,SR @ 40.2'
highly fractured @ 40.5-41.2'

grades light brownish gray & gray, banded @ 41.3'

shale parting - 0°,B,PI,SR @ 42.0'

42.2

DOLOMITE; grayish brown, gray, & very dark gray, mottled; pitted; micritic; slightly to moderately weathered; strong; very hard; pits closely spaced, 0.004-0.04", some partially filled w/calcite; (Bass Islands Group).
30°,J,No,No,PI,R @ 43.0-43.1', 43.3-43.4'
highly fractured @ 44.0-44.1'

44.1

DOLOMITE; grayish brown; pitted; micritic to very fine

REMARKS

- sampler w/ nominal 6" temporary steel casing advanced w/sampler.
- Sonic core S7 stored in box labeled SC1.
- Set nominal 6" temporary steel casing to 30.0'.
- Below 30.0' continued w/triple tube wire line core barrel w/ diamond bit using water as drilling fluid.
- Water level @ 13.2' prior to start of drilling on 08/25/07.
- Core box #1 starts @ 30.0'.
- Core loss @ 30.0-30.5'.
- Drill chatter @ 35.5'.
- Drill chatter @ 36.0'.
- Drill chatter @ 37.5'.
- Core loss in highly fractured zone @ 44.0-

BLACK & VEATCH

BORING LOG

BORING NO. FO-E1

CLIENT	PROJECT	PROJECT NO.
Detroit Edison	Fermi 3 COL Application	147483

PROJECT LOCATION	COORDINATES		GROUND ELEVATION (DATUM)	TOTAL DEPTH
Monroe, MI	N 6490.2'	E 4915.0'	581.2 ft (NAVD 88)	130.3 (feet)

SURFACE CONDITIONS	COORDINATE SYSTEM	DATE START	DATE FINISHED
Gravel street	Plant	08/22/07	08/26/07

LOGGED BY	CHECKED BY	APPROVED BY
GO for TB for Grainger/Mass	EM for TB for Dogbey/Mass	EM Meyer

SAMPLING							CORING										
SAMPLE TYPE	SAMPLE NUMBER	SET 6 INCHES	2ND 6 INCHES	3RD 6 INCHES	N VALUE	SAMPLE RECOVERY	CORE SIZE	RUN NUMBER	RUN LENGTH	RUN RECOVERY	RQD RECOVERY	PERCENT RECOVERY	RQD	DEPTH (FEET)	SAMPLE TYPE	ELEVATION (FEET)	GRAPHIC LOG

CLASSIFICATION OF MATERIALS	REMARKS
grained; fresh; strong; hard; w/trace fossils (mollusks) & stylolites; pits (0.004-0.008"); trace shale partings; (Bass Islands Group). shale partings - 0°,B,Pl,SR @ 44.4', 46.3' 0°,B,No,No,Pl,SR @ 46.5', 47.0' shale partings - 0°,B,WA,SR @ 47.9', 49.1' highly fractured @ 49.1-49.3'	44.1'. Core box #2 starts @ 45.0'.
49.4 DOLOMITE; argillaceous; grayish brown & gray, banded; very fine grained; fresh; very strong; hard; (Bass Islands Group). 0°,B,No,No,Pl,SR @ 49.7' highly fractured @ 50.5-50.7' 0°,J,No,No,Pl,SR @ 50.5',50.7' 70°,J,N,No,No,Pl,SR @ 50.9-51.2', 51.0-51.2'	Drill chatter @ 49.5'.
51.1 DOLOMITE; grayish brown; micritic; fresh; strong; hard; w/shale partings; (Bass Islands Group). 0°,J,No,No,Pl,SR @ 51.4',51.6',53.2' 90°,J,N,Pl @ 51.5-52.1' highly fractured @ 52.1-52.4' anhydrite; white; micritic; fresh; strong; hard; possible joint fill; ~0.4" crystals @ 52.4-52.7' shale parting @ 52.7' 120°,J,Ca,Pa,Pl,SR @ 53.5-53.8' 60°,J,Ca,Pa,Pl,SR @ 53.6-53.7'	
shale partings & stylolites @ 55.0-55.3'	
55.6 DOLOMITE; argillaceous; olive gray; micritic; fresh; very strong; very hard; (Bass Islands Group). 10°,B,No,No,Pl,R @ 55.7-55.8' 30°,J,No,No,Ir,R @ 56.2' 85°,J,T,Pl @ 56.6-56.8' 75°,J,Ca,Fi,Pl,Slk @ 56.6-56.8' dolomite & dolomitic shale; light gray & light brownish gray, mottled; micritic; fresh; strong; hard; @ 56.8-56.9'	
56.9 DOLOMITE; oolitic; light brownish gray; medium to coarse grained (crystalline); fresh; strong; hard; oolites about 0.02-0.04"; (Bass Islands Group). fine grained @ 57.9-58.1' elongated vugs, 0.04-0.08" @ 59.1-59.5'	
59.6 DOLOMITE; white & light gray, banded; micritic; fresh;	

HQ	4	5.0	45.0 5.0	3.9	100	78								45 46 47 48 49 50		536 535 534 533 532 531	
HQ	5	5.0	50.0 5.0	1.3	100	26								51 52 53 54 55		530 529 528 527 526	
HQ	6	5.0	55.0 4.8	3.3	96	66								56 57 58 59 60		525 524 523 522	

BLACK & VEATCH

BORING LOG

BORING NO. FO-E1

CLIENT	PROJECT	PROJECT NO.
Detroit Edison	Fermi 3 COL Application	147483

PROJECT LOCATION	COORDINATES	GROUND ELEVATION (DATUM)	TOTAL DEPTH
Monroe, MI	N 6490.2' E 4915.0'	581.2 ft (NAVD 88)	130.3 (feet)

SURFACE CONDITIONS	COORDINATE SYSTEM	DATE START	DATE FINISHED
Gravel street	Plant	08/22/07	08/26/07

LOGGED BY	CHECKED BY	APPROVED BY
TB for Grainger/Mass	TB for Dogbey/Mass	Em Meyer

SAMPLING: SAMPLE TYPE	SAMPLE NUMBER	SET 6 INCHES	2ND 6 INCHES	3RD 6 INCHES	N VALUE	SAMPLE RECOVERY	CORING: CORE SIZE	RUN NUMBER	RUN LENGTH	RUN RECOVERY	RQD RECOVERY	PERCENT RECOVERY	RQD	DEPTH (FEET)	SAMPLE TYPE	ELEVATION (FEET)	GRAPHIC LOG	CLASSIFICATION OF MATERIALS	REMARKS
										60.0				60		521		very strong; hard; w/very dark gray; very fine grained; fresh; strong; hard; shale partings; wavy, subhorizontal bands; (Bass Islands Group). highly fractured @ 60.0-60.4' 10°,J,No,No,Pl,R @ 61.1'	Core box #3 starts @ 60.0'.
														61		520			
														62		519		20°,J,Cl,Fi,Pl,R @ 61.7'	
							HQ	7	5.0	5.0	2.9	100	58					10°,J,Cl,Fi,Pl,SR @ 62.2', 62.5'	
														63		518		DOLOMITE; grayish brown, light brownish gray & gray, banded; laminated; micritic; fresh; strong; hard; (Bass Islands Group).	
														64		517		60°,J,Cl,Pa,Pl,R @ 63.9-64.3' (2) highly fractured w/clay @ 64.5-64.6'	No drilling fluid return @ 64.0'.
										65.0				65		516			Core loss @ 65.0-65.4'.
														66		515		0°,J,UK,Pa,St,R @ 65.6' 20°,J,Ca/Cl,Pa,Pl,SR @ 65.9', 66.0' 0°,J,No,No,Pl,SR @ 66.1' 20°,J,Cl,Fi,Pl,SR @ 66.3'	
														67		514		gray; pitted; less banding @ 66.8-67.6'	
							HQ	8	5.0	4.6	2.0	92	40					90°,J,Cl,Pa,Pl,SR @ 67.5-68.0' 90°,J,T,Pl @ 67.6-68.0'	
														68		513			
														69		512		highly fractured @ 68.6-68.7' 68.7 DOLOMITE; light brownish gray; pitted; micritic; fresh to slightly weathered; strong; hard; w/closely to very closely spaced stylolites; pits 0.02"; (Bass Islands Group).	
										70.0				70		511		40°,J,Cl,Pa,Pl,St,SR @ 68.9-69.0' 80°,J,No,No,Pl,SR @ 70.2-70.5'	
														71		510			
														72		509		highly fractured @ 72.2-72.3', 73.3-73.5' grades light olive gray & light yellowish brown, banded @ about 72.3' 65°,J,No,No,Pl,SR @ 72.6-73.0' 90°,J,No,No,Pl,R @ 73.0-73.3'	
							HQ	9	5.0	5.0	2.1	100	42						
														73		508			
														74		507			
														75				fat clay - about 100% high plasticity, medium	

BLACK & VEATCH

BORING LOG

BORING NO. FO-E1

CLIENT	PROJECT	PROJECT NO.
Detroit Edison	Fermi 3 COL Application	147483

PROJECT LOCATION	COORDINATES	GROUND ELEVATION (DATUM)	TOTAL DEPTH
Monroe, MI	N 6490.2' E 4915.0'	581.2 ft (NAVD 88)	130.3 (feet)

SURFACE CONDITIONS	COORDINATE SYSTEM	DATE START	DATE FINISHED
Gravel street	Plant	08/22/07	08/26/07

LOGGED BY	CHECKED BY	APPROVED BY
Grainger/Mass	Dogbey/Mass	Meyer

SAMPLING: SAMPLE TYPE	SAMPLE NUMBER	SET 6 INCHES	2ND 6 INCHES	3RD 6 INCHES	N VALUE	SAMPLE RECOVERY

CORING: CORE SIZE	RUN NUMBER	RUN LENGTH	RUN RECOVERY	RQD RECOVERY	PERCENT RECOVERY	RQD
HQ	10	5.0	4.7	3.1	94	62
HQ	11	5.0	5.0	2.2	100	44
HQ	12	5.0	5.0	3.2	100	64

DEPTH (FEET)	ELEVATION (FEET)	CLASSIFICATION OF MATERIALS	REMARKS
75	506	75.0 toughness, no dilatancy fines; gray; soft; moist; no reaction w/HCl; homogeneous @ 74.7-74.8'	Core box #4 starts @ 75.0'.
		75.2 DOLOMITE; brecciated (healed); grayish brown; micritic; fresh; very strong; hard; w/stylolites; mottled w/ shale in matrix; (Bass Islands Group).	
76	505		
77	504		
		77.5 DOLOMITE; light gray; pitted; micritic; slightly weathered; strong; hard; (Bass Islands Group). highly fractured @ 77.5-78.5' 80°,J,No,No,Pl,SR @ 78.5-79.1'	Core loss in highly fractured zone @ 77.5-78.5'.
78	503		
79	502	79.0 DOLOMITE; gray to light brownish gray; banded; micritic; fresh; very strong; hard; (Bass Islands Group). 0°,J,UK,Fi,Pl,SR @ 79.8' 80°,J,No,No,Pl,SR @ 79.8-79.9'	
80	501	80.0 very closely spaced stylolites @ 80.5-80.6'	
81	500	highly fractured @ 81.2-81.3' light gray & gray, mottled @ about 81.3-81.7'	
82	499	80°,J,No,No,Pl,SR @ 81.7-82.2' 0°,B,No,No,Pl,S @ 82.1'	
83	498	0°,B,Ca,Fi,Pl,SR @ 83.3'	
84	497	83.8 SHALE; very dark gray; laminated; very fine grained; fresh; strong; hard; (Bass Islands Group). moderately weathered; weak; low hardness @ 83.8-84.0' 150°,J,Cl,Fi,Pl,SR @ 84.3-84.4' 20°,J,Cl,Fi,Pl,SR @ 84.4'	
85	496	84.8 DOLOMITE; argillaceous; gray; micritic; fresh; strong; hard; (Bass Islands Group). 90°,J,Cl,Pa,Pl,SR @ 84.8-86.0', 85.0-86.0'	
86	495	85.3 DOLOMITE; grayish brown; micritic; fresh; very strong; hard; w/stylolites; (Bass Islands Group). 0°,J,UK,Pa,Pl,SR @ 85.3', 85.7' vuggy; slightly weathered @ 86.8-87.5' shale partings - 0°,B,Pl,SR @ 86.9', 87.0' 50°,J,No,No,Pl,SR @ 87.3-87.4' very closely spaced stylolites @ 88.0-88.1'	
87	494		
88	493		
89	492	30°,J,No,No,Pl,SR @ 89.1-89.2'	
90		89.9	

BLACK & VEATCH

BORING LOG

BORING NO. FO-E1
SHEET 7 OF 10

CLIENT	PROJECT	PROJECT NO.
Detroit Edison	Fermi 3 COL Application	147483

PROJECT LOCATION	COORDINATES	GROUND ELEVATION (DATUM)	TOTAL DEPTH
Monroe, MI	N 6490.2' E 4915.0'	581.2 ft (NAVD 88)	130.3 (feet)

SURFACE CONDITIONS	COORDINATE SYSTEM	DATE START	DATE FINISHED
Gravel street	Plant	08/22/07	08/26/07

LOGGED BY	CHECKED BY	APPROVED BY
Grainger/Mass	Dogbey/Mass	Meyer

SAMPLING: SAMPLE TYPE	SAMPLE NUMBER	SET 6 INCHES	2ND 6 INCHES	3RD 6 INCHES	N VALUE	SAMPLE RECOVERY

CORING: CORE SIZE	RUN NUMBER	RUN LENGTH	RUN RECOVERY	RQD RECOVERY	PERCENT RECOVERY	RQD
HQ	13	5.0	5.0	3.1	100	62
HQ	14	5.0	4.6	1.6	92	32
HQ	15	5.0	5.0	2.9	100	58

DEPTH (FEET)	ELEVATION (FEET)	CLASSIFICATION OF MATERIALS	REMARKS
90	491	DOLOMITE; argillaceous; light brownish gray; micritic; fresh; strong; hard; w/trace stylolites; (Bass Islands Group).	Core box #5 starts @ 90.0'.
		shale parting - 0°,B,Pl,SR @ 90.7'	
91	490	0°,B,Cl,Fi,Pl,SR @ 90.9'	
		0°,B,No,No,Pl,SR @ 91.5', 93.4'	
92	489		
93	488	mottled w/dolomitic shale @ 93.3-93.5'	
		shale parting - 10°,B,Pl,SR @ 93.7'	
94	487	grades brecciated; fractured argillaceous dolomite healed/recrystallized w/quartz (hardness > knife blade) @ 93.7'	
		94.0	
95	486	DOLOMITE; olive gray, light gray & dark gray, banded; micritic; fresh; very strong; hard; (Bass Islands Group).	
		90°,J,VN,Ca,Fi,Pl @ 94.0-95.1'	
96	485	60°,J,T,Ca,Fi,Pl @ 94.9-95.0'	
		shale partings - 0°,B,Pl,SR @ 95.0',95.1',95.2',95.4', 95.6', 95.7',95.9',96.0',96.1',97.3',97.5'	
97	484	gray, mottled @ 96.2-97.2'	
		highly fractured @ 97.3-97.5'	
		50°,J,No,No,Pl,SR @ 97.5-97.7'	
98	483	97.8	
		DOLOMITE; gray; micritic; fresh; strong; hard; thick bedded; w/trace stylolites; (Bass Islands Group).	
99	482	shale partings - 0°,B,Pl,SR @ 97.9',98.9'	
		highly fractured @ 97.9-98.0'	
		40°,J,Cl,Pa,Pl,SR @ 99.2-99.3'	
100	481	90°,J,No,No,Pl,SR @ 99.8-100.0' (2)	
		0°,B,UK,Fi,Pl,SR @ 100.0',101.1'	
101	480		
		0°,B,UK,Fi,Pl,SR @ 101.6',101.7',102.1'	
102	479	50°,J,Cl,Pa,Pl,Slk @ 102.1-102.2'	
		50°,J,Cl,Pa,Pl,S @ 102.2-102.3'	
103	478	90°,J,No,No,Pl,SR @ 102.3-102.8'	
		0°,B,UK,Fi,Pl,SR @ 102.4',102.8',103.2',103.3'	
		highly fractured @ 103.1-103.3'	
104	477	0°,B,UK,Fi,Pl,SR @ 103.7',103.9',104.4'	
			Core box #6 starts @ 104.4'.
105		40°,J,No,No,Pl,SR @ 104.8-105.0'	

BLACK & VEATCH

BORING LOG

BORING NO. FO-E1

CLIENT	PROJECT	PROJECT NO.
Detroit Edison	Fermi 3 COL Application	147483

PROJECT LOCATION	COORDINATES	GROUND ELEVATION (DATUM)	TOTAL DEPTH
Monroe, MI	N 6490.2' E 4915.0'	581.2 ft (NAVD 88)	130.3 (feet)

SURFACE CONDITIONS	COORDINATE SYSTEM	DATE START	DATE FINISHED
Gravel street	Plant	08/22/07	08/26/07

LOGGED BY	CHECKED BY	APPROVED BY
Grainger/Mass	Dogbey/Mass	Meyer

SAMPLING							CORING									
SAMPLE TYPE	SAMPLE NUMBER	SET 6 INCHES	2ND 6 INCHES	3RD 6 INCHES	N VALUE	SAMPLE RECOVERY	CORE SIZE	RUN NUMBER	RUN LENGTH	RUN RECOVERY	RQD RECOVERY	PERCENT RECOVERY	RQD	DEPTH (FEET)	SAMPLE TYPE	ELEVATION (FEET)	GRAPHIC LOG	CLASSIFICATION OF MATERIALS	REMARKS
										105.0				105		476		110°,J,No,No,Pl,S @ 105.1-105.3' 80°,J,No,No,Pl,S @ 105.3-105.5'	
														106		475			
														107		474		mottled w/shale @ 106.7-107.1' 0°,J,Ca,Fi,Pl,SR @ 107.1', 107.5'	
							HQ	16	5.0	4.9	3.7	98	74	108		473		highly fractured @ 107.7-107.8' 70°,J,No,No,WA,S @ 108.1-108.5'	
																		108.6 DOLOMITE; argillaceous; grayish brown; pitted; very fine grained (crystalline); fresh to slightly weathered; strong; hard; w/very closely spaced stylolites; (Bass Islands Group). 0°,J,Cl,Pa,Pl,SR @ 108.6'	
														109		472			
										110.0				110		471			
														111		470			
														112		469			
							HQ	17	5.0	5.0	3.9	100	78	113		468		113.2 DOLOMITE; light brownish gray; micritic; slightly weathered; strong; hard; (Bass Islands Group). highly fractured @ 113.2-113.3' 0°,B,Ca/Cl,Fi,Pl,SR @ 113.3' 0°,J,Ca,Pa,Pl,SR @ 113.6', 113.9' 90°,J,T,Ca,Fi,Pl @ 113.7-114.0' (3) 30°,J,Ca,Pa,Pl,SR @ 113.9-114.0', 114.1-114.2'	
														114		467			
										115.0				115		466		114.2 DOLOMITE & argillaceous DOLOMITE; grayish brown & gray, mottled; pitted; micritic to very fine grained; fresh to slightly weathered; very strong; hard; (Bass Islands Group). highly fractured @ 115.4-115.6', 116.2-116.4'	
														116		465			
														117		464		116.3 DOLOMITE; argillaceous; gray; micritic; fresh; very strong; hard; (Bass Islands Group). claystone; dolomitic; greenish gray; very fine grained; highly weathered; weak; low hardness; hydrocarbon odor; bed; properties comparable to low plasticity, low toughness, no dilatancy fines @ 116.5-116.8'	
							HQ	18	5.0	4.0	0.9	80	18	118		463		30°,J,Cl,Pa,Pl,SR @ 116.7-116.8' 90°,J,Cl,Pa,Pl,SR @ 116.8-117.0' 0°,J,Cl,Fi,Pl,SR @ 117.2', 117.4' 0°,J,Cl/Ca,Fi,Pl,SR @ 117.3'	
														119		462			
														120				117.9 DOLOMITE & SHALE; dolomitic; light olive brown, dark	

BLACK & VEATCH

BORING LOG

BORING NO. FO-E1

CLIENT	PROJECT	PROJECT NO.
Detroit Edison	Fermi 3 COL Application	147483

PROJECT LOCATION	COORDINATES	GROUND ELEVATION (DATUM)	TOTAL DEPTH
Monroe, MI	N 6490.2' E 4915.0'	581.2 ft (NAVD 88)	130.3 (feet)

SURFACE CONDITIONS	COORDINATE SYSTEM	DATE START	DATE FINISHED
Gravel street	Plant	08/22/07	08/26/07

LOGGED BY GTO for TB for Grainger/Mass | CHECKED BY EM for TB for Dogbey/Mass | APPROVED BY EM Meyer

SAMPLING: SAMPLE TYPE	SAMPLE NUMBER	SET 6 INCHES	2ND 6 INCHES	3RD 6 INCHES	N VALUE	SAMPLE RECOVERY

CORING: CORE SIZE	RUN NUMBER	RUN LENGTH	RUN RECOVERY	RQD RECOVERY	PERCENT RECOVERY	RQD
HQ	19	5.0	3.0	0	60	0
HQ	20	2.5	1.0	0	40	0
HQ	21	2.5	1.3	0.3	52	12

DEPTH (FEET)	SAMPLE TYPE	ELEVATION (FEET)	GRAPHIC LOG	CLASSIFICATION OF MATERIALS	REMARKS
120		461		120.0 gray & dark grayish brown, banded; laminated; micritic to very fine grained; slightly weathered; strong; hard; (Salina Group - Unit F). 70°,J,Cl,Pa,Pl,SR @ 118.2-118.7' 90°,J,Cl,Pa,Pl,SR @ 118.6-118.8' highly fractured @ 118.8-119.0' claystone; dolomitic; gray; highly weathered; weak to very weak; low hardness to friable; slight hydrocarbon odor @ 121.2-121.6'	Core box #7 starts @ 120.0'. Core loss throughout @ 120.0-130.0'.
121		460			
122		459			
123		458		shale parting - 0°,B,Pl,SR @ 122.7' 80°,J,No,No,Pl,SR @ 122.7-122.9'	
124		457		122.9 DOLOMITE; light gray; pitted; micritic; slightly weathered; strong; hard; (Salina Group - Unit F). 0°,B,No,No,Pl,SR @ 123.4' claystone; light brownish gray; highly weathered; weak; low hardness; contains fragments of dolomite @ 123.7-123.8' mottled w/anhydrite @ 123.8-124.0'	Water level @ 15.0' prior to drilling on 08/26/07.
125		456			
126		455		125.7 LIMESTONE; argillaceous; greenish gray; micritic; slightly to moderately weathered; strong; hard; (Salina Group - Unit F).	
127		454		126.3 DOLOMITE; light gray; pitted; micritic; slightly weathered; strong; hard; (Salina Group - Unit F) mottled w/anhydrite @ 126.3-126.7'	
128		453			
129		452		129.0 DOLOMITE; argillaceous; gray; micritic; fresh; very strong; very hard; (Salina Group - Unit F). 90°,J,Cl,Pa,Pl,SR @ 129.1-129.4'	
130		451		130.0	
131		450			Bottom of boring @ 130.3'. Water level @ 14.9' at completion of drilling. The extra 0.3' may be due to washout while taking the last core sample. Backfilled w/ bentonite chips to 39' on 09/07/07. Backfilled w/ bentonite chips to 3' & backfilled
132		449			
133		448			
134		447			
135					

BLACK & VEATCH

BORING LOG

BORING NO. FO-E1

CLIENT	PROJECT	PROJECT NO.
Detroit Edison	Fermi 3 COL Application	147483

PROJECT LOCATION	COORDINATES	GROUND ELEVATION (DATUM)	TOTAL DEPTH
Monroe, MI	N 6490.2' E 4915.0'	581.2 ft (NAVD 88)	130.3 (feet)

SURFACE CONDITIONS	COORDINATE SYSTEM	DATE START	DATE FINISHED
Gravel street	Plant	08/22/07	08/26/07

LOGGED BY	CHECKED BY	APPROVED BY
Grainger/Mass	Dogbey/Mass	Meyer

SAMPLING: SAMPLE TYPE	SAMPLE NUMBER	SET 6 INCHES	2ND 6 INCHES	3RD 6 INCHES	N VALUE	SAMPLE RECOVERY
CORING: CORE SIZE	RUN NUMBER	RUN LENGTH	RUN RECOVERY	RQD RECOVERY	PERCENT RECOVERY	RQD

DEPTH (FEET)	SAMPLE TYPE	ELEVATION (FEET)	GRAPHIC LOG	CLASSIFICATION OF MATERIALS	REMARKS
135		446			w/gravel to surface on 09/12/07.
136		445			
137		444			
138		443			
139		442			
140		441			
141		440			
142		439			
143		438			
144		437			
145		436			
146		435			
147		434			
148		433			
149		432			
150					

BLACK & VEATCH

BORING LOG

BORING NO. FWS/ACB-C1

SHEET 1 OF 8

CLIENT	PROJECT	PROJECT NO.
Detroit Edison	Fermi 3 COL Application	147483

PROJECT LOCATION	COORDINATES		GROUND ELEVATION (DATUM)	TOTAL DEPTH
Monroe, MI	N 6203.1'	E 4776.3'	581.4 ft (NAVD 88)	105.2 (feet)

SURFACE CONDITIONS	COORDINATE SYSTEM	DATE START	DATE FINISHED
Asphalt Parking Lot		08/25/07	08/26/07

LOGGED BY	CHECKED BY	APPROVED BY
Grainger/Bonnie TB	Dogbey/Bonnie TB	Meyer

SAMPLING							CORING									
SAMPLE TYPE	SAMPLE NUMBER	SET 6 INCHES	2ND 6 INCHES	3RD 6 INCHES	N VALUE	SAMPLE RECOVERY	CORE SIZE	RUN NUMBER	RUN LENGTH	RUN RECOVERY	RQD RECOVERY	PERCENT RECOVERY	RQD	DEPTH (FEET)	SAMPLE TYPE	ELEVATION (FEET)	GRAPHIC LOG	CLASSIFICATION OF MATERIALS	REMARKS
														0		581		Undifferentiated Overburden. (see logs for FWS/ACB-C1a & TP 1)	Boring advanced w/4" ID sonic continuous sampler w/ nominal 6" temporary steel casing advanced w/sampler. Drilled through TP-1 backfill.
														1		580			
														2		579			
														3		578			
														4		577			
														5		576			
														6		575			
														7		574			
														8		573			
														9		572			
														10				10.0	
S	1									10.0				10		571		Well-graded GRAVEL with Fines and Sand (GW-GM) - About 75% gravel; about 15% sand; about 10% fines; (Fill).	From 10'-15' logged based on sample photo labeled S3 in photo record.
														11		570			
														12		569			
														13		568			
														14		567			
														15					

BLACK & VEATCH

BORING LOG

BORING NO. FWS/ACB-C1

CLIENT	PROJECT	PROJECT NO.
Detroit Edison	Fermi 3 COL Application	147483

PROJECT LOCATION	COORDINATES	GROUND ELEVATION (DATUM)	TOTAL DEPTH
Monroe, MI	N 6203.1' E 4776.3'	581.4 ft (NAVD 88)	105.2 (feet)

SURFACE CONDITIONS	COORDINATE SYSTEM	DATE START	DATE FINISHED
Asphalt Parking Lot		08/25/07	08/26/07

LOGGED BY	CHECKED BY	APPROVED BY
Grainger/Bonnie TB	Dogbey/Bonnie TB	Meyer

SAMPLING: SAMPLE TYPE	SAMPLE NUMBER	SET 6 INCHES	2ND 6 INCHES	3RD 6 INCHES	N VALUE	SAMPLE RECOVERY	CORING: CORE SIZE	RUN NUMBER	RUN LENGTH	RUN RECOVERY	RQD RECOVERY	PERCENT RECOVERY	RQD	DEPTH (FEET)	SAMPLE TYPE	ELEVATION (FEET)	GRAPHIC LOG	CLASSIFICATION OF MATERIALS	REMARKS
										15.0				15		566		Silty/Clayey GRAVEL with Sand (GM/GC) - About 45% gravel; about 40% sand; about 15% fines. — 15.0	From 15'-16' logged based on sample photo labeled S4 in photo record, w/ silt/clay content based on natural gamma log.
														16		565		Fat CLAY (CH) - About 100% high plasticity, high toughness, no dilatancy fines; greenish gray; soft; moist; weak reaction w/HCl; homogeneous; (Lacustrine Deposit). — 16.0	
S	2												5.0	17		564			Discrete sample 4A collected from S2 @ 16.5'-17.0'.
														18		563		Lean CLAY with Sand (CL) - About 75% medium plasticity, high toughness, no dilatancy fines; 15% fine to coarse, subangular to angular sand; 10% fine to coarse, subangular gravel w/max. size 1"; brown; firm; moist; strong reaction w/HCl; homogeneous; (Glacial Till). — 17.8	
														19		562			Discrete sample 4B collected from S2 @ 19.0'-19.5'.
										20.0				20		561			
																		Poorly graded SAND (SP) - About 100% fine to medium sand; grayish brown; moist; strong reaction w/HCl; homogeneous; (Glacial Till). — 20.6	Discrete sample 5A from S3 @ 20.6'-20.7'.
														21		560		Lean CLAY with Gravel (CL) - About 75% medium plasticity, medium toughness fines; 20% angular to subangular, fine to coarse gravel w/max. size 3"; about 5% subangular cobbles w/max. size of 5"; dark gray; firm; moist; strong reaction w/HCl; (Glacial Till). — 20.7	
S	3												5.0	22		559			
														23		558			Discrete sample 5B collected from S3 @ 23.3'-23.8'.
														24		557			
										25.0				25		556			
														26		555			
S	4												3.3	27		554			Discrete sample 6 collected from S4 @ 26.8-27.2'.
														28		553			
										28.3								DOLOMITE; grayish brown; crystalline; micritic; fresh; strong; hard; banded; (Bass Islands Group). — 28.3	Sonic Core Box 1 starts @ 28.3'. Set nominal 6" temporary steel casing @ 30.5'.
S	5												2.0	29		552			
														30					

BLACK & VEATCH

BORING LOG

BORING NO. FWS/ACB-C1

SHEET 3 OF 8

CLIENT	PROJECT	PROJECT NO.
Detroit Edison	Fermi 3 COL Application	147483

PROJECT LOCATION	COORDINATES	GROUND ELEVATION (DATUM)	TOTAL DEPTH
Monroe, MI	N 6203.1' E 4776.3'	581.4 ft (NAVD 88)	105.2 (feet)

SURFACE CONDITIONS	COORDINATE SYSTEM	DATE START	DATE FINISHED
Asphalt Parking Lot		08/25/07	08/26/07

LOGGED BY	CHECKED BY	APPROVED BY
Grainger/Bonnie TB	Dogbey/Bonnie TB	Meyer

SAMPLING: SAMPLE TYPE	SAMPLE NUMBER	SET 6 INCHES	2ND 6 INCHES	3RD 6 INCHES	N VALUE	SAMPLE RECOVERY	CORING: CORE SIZE	RUN NUMBER	RUN LENGTH	RUN RECOVERY	RQD RECOVERY	PERCENT RECOVERY	RQD	DEPTH (FEET)	SAMPLE TYPE	ELEVATION (FEET)	GRAPHIC LOG	CLASSIFICATION OF MATERIALS	REMARKS
														30		551			
										30.5				31		550		0°,B,N,No,No,Ir @ 30.8', 31.4' 90°,J,T,No,No,Ir @ 30.8-31.4', 31.6', 33.5-33.8'	Below 30.5' continued w/ triple tube wire line core barrel w/diamond bit using water as drilling fluid. Core box #1 starts @ 30.5'.
														32		549		0°,B,N,Ir (solutioned) @ 31.8', 32.0', 34.5', 34.9'	
PQ	1	4.5	4.5	3.7	100	82	PQ	1	4.5	4.5	3.7	100	82	33		548			
														34		547			
										35.0				35		546		90°,J,T,No,No,Ir @ 35.0-35.6' (closely spaced 1")	
														36		545		bedding contorted @ 35.6-37.6' pitted & vuggy @ 36.2-36.6'	
														37		544		0°,B,N,No,No,Ir @ 36.9', 38.2', 38.6' 25-30°,B,N,UK,Sp,WA @ 37.3'	
PQ	2	5.0	4.9	3.8	98	76	PQ	2	5.0	4.9	3.8	98	76	38		543		37.6 DOLOMITE; light gray & dark gray, mottled; micritic; fresh; very strong; hard; (Bass Islands Group). 0°,B,N,UK,Sp,Ir @ 37.6' 85-90°,J,T,H @ 38.2-39.7'	
														39		542			
										40.0				40		541		40.2 DOLOMITE; fossiliferous; dark grayish brown; micritic; fresh; very strong, hard; w/pits left from shell casts; (Bass Islands Group). 0°,B,N,UK,Sp,Ir @ 40.5', 41.8', 42.0'	Core box #2 starts @ 40.0'.
														41		540		0°,B (solutioned) @ 41.6'	
PQ	3	5.0	5.0	2.2	100	44	PQ	3	5.0	5.0	2.2	100	44	42		539		41.9 DOLOMITE; light gray; micritic; slightly weathered; strong; hard; highly fractured; partially healed w/ anhydrite filling; (Bass Islands Group).	
														43		538		70°,J,N,No,No,Ir @ 43.2-43.8' 70°,J,N (solutioned) @ 43.6-44.3'	
														44		537		highly fractured @ 44.4-44.8'	
														45					

5/13/2008 3:11 PM DTE - Fermi 3 Geotech

BLACK & VEATCH

BORING LOG

BORING NO. FWS/ACB-C1

CLIENT	PROJECT	PROJECT NO.
Detroit Edison	Fermi 3 COL Application	147483

PROJECT LOCATION	COORDINATES	GROUND ELEVATION (DATUM)	TOTAL DEPTH
Monroe, MI	N 6203.1' E 4776.3'	581.4 ft (NAVD 88)	105.2 (feet)

SURFACE CONDITIONS	COORDINATE SYSTEM	DATE START	DATE FINISHED
Asphalt Parking Lot		08/25/07	08/26/07

LOGGED BY	CHECKED BY	APPROVED BY
Grafinger/Bonnie TB	Dogbey/Bonnie TB	Meyer

SAMPLING							CORING							DEPTH (FEET)	SAMPLE TYPE	ELEVATION (FEET)	GRAPHIC LOG	CLASSIFICATION OF MATERIALS	REMARKS
SAMPLE TYPE	SAMPLE NUMBER	SET 6 INCHES	2ND 6 INCHES	3RD 6 INCHES	N VALUE	SAMPLE RECOVERY	CORE SIZE	RUN NUMBER	RUN LENGTH	RUN RECOVERY	RQD RECOVERY	PERCENT RECOVERY	RQD						
										45.0				45		536		45.2 DOLOMITE; argillaceous; light gray; micritic; slightly weathered; strong; hard; w/argillaceous partings and stylolites; (Bass Islands Group). 0°,B,N,Ir (solutioned) @ 45.5',46.1',46.3',46.5',46.7', 47.7', 48.2'	
							PQ	4	5.0	5.0	2.9	100	58	46		535			
														47		534			
														48		533		48.2 DOLOMITE; light gray; micritic; slightly weathered; strong; hard; w/vugs filled w/light brownish gray dolomite; fractured; healed; (Bass Islands Group). 85°-90°,J,MW,No,No,Ir,VR @ 49.4-49.9'	Core box #3 starts @ 49.5'.
														49		532			
										50.0				50		531		50.2 DOLOMITE; light gray; micritic; fresh; very strong; hard; (Bass Islands Group). 10°,B,N,No,No,Ir,R @ 50.4', 50.7', 51.3', 51.3'	
														51		530		51.5 SHALE; fissile; dark gray; fresh; moderately strong, hard; (Bass Islands Group). 90°,J,N,No,No,Ir,R @ 51.7-52.0'	
							PQ	5	5.0	5.0	3.0	100	60	52		529		51.8 DOLOMITE; light gray & dark gray, mottled; micritic; fresh; very strong; hard; gradational contact on bottom; (Bass Islands Group).	
														53		528		52.0 DOLOMITE; oolitic, light brownish gray; crystalline; very fine grained; fresh; strong; hard; massive; w/ some dark gray seams; (Bass Islands Group). 30°,J,N,No,No,Ir,R @ 52.9' 70°,J,N,No,No,Ir,R @ 53.6', 53.8'	
														54		527			
										55.0				55		526		55.3 DOLOMITE; oolitic; intermixed light gray & light brownish gray, micritic; fresh; strong; hard; grading to mottled; (Bass Islands Group). 30°,J,T,No,No,Ir,R @ 55.5' 10°,B,N,No,No,Ir @ 55.9', 56.1', 56.2', 56.6', 57.3', 57.6', 58.0', 58.4', 58.6', 58.9', 59.5'	
														56		525			
														57		524		56.2 healed brecciated zone @ 56.2-56.4' DOLOMITE; argillaceous; light gray; micritic; fresh; strong; hard; w/shaley bands & partings; stylolites; (Bass Islands Group). contorted bedding @ 56.4-58.0' shale band @ 58.0'	
							PQ	6	5.0	4.9	2.6	98	52	58		523			Core box #4 starts @ 58.3'.
														59		522			
														60					

BLACK & VEATCH

BORING LOG

BORING NO. FWS/ACB-C1

CLIENT	PROJECT	PROJECT NO.
Detroit Edison	Fermi 3 COL Application	147483

PROJECT LOCATION	COORDINATES	GROUND ELEVATION (DATUM)	TOTAL DEPTH
Monroe, MI	N 6203.1' E 4776.3'	581.4 ft (NAVD 88)	105.2 (feet)

SURFACE CONDITIONS	COORDINATE SYSTEM	DATE START	DATE FINISHED
Asphalt Parking Lot		08/25/07	08/26/07

LOGGED BY	CHECKED BY	APPROVED BY
Grainger/Bonnie TB	Dogbey/Bonnie TB	Meyer

SAMPLING							CORING									
SAMPLE TYPE	SAMPLE NUMBER	SET 6 INCHES	2ND 6 INCHES	3RD 6 INCHES	N VALUE	SAMPLE RECOVERY	CORE SIZE	RUN NUMBER	RUN LENGTH	RUN RECOVERY	RQD RECOVERY	PERCENT RECOVERY	RQD	DEPTH (FEET)	SAMPLE TYPE	ELEVATION (FEET)	GRAPHIC LOG	CLASSIFICATION OF MATERIALS	REMARKS
										60.0				60		521		0°,B,N,No,No,Ir,R @ 60.3', 61.6', 65.4'	
														61		520		fractured along bedding; weathered @ 60.7-60.8', 61.8-62.0', 63.8'	
														62		519		62.0 DOLOMITE; light gray; micritic; slightly weathered; strong; hard; banded; w/stylolites & argillaceous partings; (Bass Islands Group).	
							PQ	7	5.0	5.0	3.2	100	64	63		518		85°,J,N,No,No,Ir,VR @ 62.6-63.9'	
														64		517			
										65.0				65		516		80°,J,T,H,No,Ir,R @ 64.9-65.8', 68.1-68.7'	
																		60°,J,T,H,Fi,Ir,R @ 65.4'	
														66		515			
														67		514			
							PQ	8	5.0	5.0	5.0	100	100	68		513			Core box #5 starts @ 67.8'.
														69		512			
										70.0				70		511		60°,J,MW,Cl,Fi,Ir,R @ 70.3'	
														71		510		60°,J,N,No,No,Ir,R @ 70.8' 70.9 BRECCIA; healed; dolomite matrix; light gray; micritic, fresh; very strong; hard; w/clasts of dolomite; light brownish gray; (Bass Islands Group).	
														72		509		fractured @ 71.5',71.7',72.0',72.3'	
							PQ	9	5.0	5.0	3.0	100	60	73		508		fractured @ 72.7',73.2'	
														74		507			
														75				fractured @ 74.6'	

BLACK & VEATCH

BORING LOG

BORING NO. FWS/ACB-C1

CLIENT	PROJECT	PROJECT NO.
Detroit Edison	Fermi 3 COL Application	147483

PROJECT LOCATION	COORDINATES	GROUND ELEVATION (DATUM)	TOTAL DEPTH
Monroe, MI	N 6203.1' E 4776.3'	581.4 ft (NAVD 88)	105.2 (feet)

SURFACE CONDITIONS	COORDINATE SYSTEM	DATE START	DATE FINISHED
Asphalt Parking Lot		08/25/07	08/26/07

LOGGED BY	CHECKED BY	APPROVED BY
Granger/Bonnie TB	Dogbey/Bonnie TB	Meyer

SAMPLING							CORING									
SAMPLE TYPE	SAMPLE NUMBER	SET 6 INCHES	2ND 6 INCHES	3RD 6 INCHES	N VALUE	SAMPLE RECOVERY	CORE SIZE	RUN NUMBER	RUN LENGTH	RUN RECOVERY	RQD RECOVERY	PERCENT RECOVERY	RQD	DEPTH (FEET)	SAMPLE TYPE	ELEVATION (FEET)	GRAPHIC LOG	CLASSIFICATION OF MATERIALS	REMARKS
										75.0				75		506		75.1 DOLOMITE; argillaceous; light gray; micritic; slightly weathered; strong; hard; w/dark gray partings; (Bass Islands Group). 0-5°,B,UK,Pa,Ir,R @ 75.1', 75.2', 76.4'	Core box #6 starts @ 76.4'.
							PQ	10	5.0	4.7	2.5	94	50	76		505			
														77		504		0°,B,N (solutioned) @ 77.6', 77.9', 78.1', 78.2'	
														78		503		80-85°,J,N,No,No,Ir,R @ 78.2-79.4' 0°,B,N,UK,Sp,Ir,R @ 78.5', 78.9', 79.0', 79.1'	
														79		502		79.4 SHALE; very dark gray; fissile; micritic; fresh; weak; low hardness; (Bass Islands Group).	
										80.0				80		501		80.1 DOLOMITE; crystalline; gray; micritic; fresh; very strong; hard; w/stylolites; (Bass Islands Group). 0-10°,B,N,UK,Sp,Ir,R @ 80.1',80.6',81.7',	
							PQ	11	5.0	5.0	3.7	100	74	81		500			
														82		499		0-10°,B,N,UK,Sp,Ir,R @ 82.5'	
														83		498		0-10°,B,N,UK,Sp,Ir,R @ 83.1',83.3'	
														84		497			
										85.0				85		496		very soft, light gray parting @ 84.9'	
																		0°,B,N,UK,Sp,Ir,R @ 85.4', 86.1', 87.1'	
														86		495		70°,J,N,No,No,Ir,VR @ 86.0'	Core box #7 starts @ 86.1'.
														87		494		0°,B (solutioned) @ 86.9'	
							PQ	12	5.0	5.0	3.7	100	74					70°,J,N,No,No,Ir,VR @ 87.5'	
														88		493			
														89		492		shaley dolomite band, dark gray @ 89.5-89.8'	
														90				0°,B (solutioned) @ 89.6'	

BLACK & VEATCH

BORING LOG

BORING NO. FWS/ACB-C1

CLIENT	PROJECT	PROJECT NO.
Detroit Edison	Fermi 3 COL Application	147483

PROJECT LOCATION	COORDINATES	GROUND ELEVATION (DATUM)	TOTAL DEPTH
Monroe, MI	N 6203.1' E 4776.3'	581.4 ft (NAVD 88)	105.2 (feet)

SURFACE CONDITIONS	COORDINATE SYSTEM	DATE START	DATE FINISHED
Asphalt Parking Lot		08/25/07	08/26/07

LOGGED BY	CHECKED BY	APPROVED BY
Grainger/Bonnie TB	Dogbey/Bonnie TB	Meyer

SAMPLING							CORING									
SAMPLE TYPE	SAMPLE NUMBER	SET 6 INCHES	2ND 6 INCHES	3RD 6 INCHES	N VALUE	SAMPLE RECOVERY	CORE SIZE	RUN NUMBER	RUN LENGTH	RUN RECOVERY	RQD RECOVERY	PERCENT RECOVERY	RQD	DEPTH (FEET)	SAMPLE TYPE	ELEVATION (FEET)	GRAPHIC LOG	CLASSIFICATION OF MATERIALS	REMARKS
										90.0				90		491		89.8	
														91		490		DOLOMITE; argillaceous; light gray; micritic; fresh; strong; hard w/dark gray partings & stylolites; (Bass Islands Group). 0°,B,N,UK,Sp,Ir,R @ 89.9' 0°,B,N,UK,Su,Ir,R @ 90.1'	
														92		489			
PQ	13	5.0	5.0	4.1	100	82								93		488		90°,J,T,No,No,Pl,R @ 92.4-92.9' 0°,B,N,UK,Su,Ir,R @ 92.4',92.6' 50°,J,N,No,No,Pl,R @ 92.7', 94.7'	
														94		487		0°,B,N,UK,Su,Ir,R @ 93.6'	
										95.0				95		486		0°,B,N,UK,Su,Ir,R @ 94.7'	
														96		485		94.9 DOLOMITE; light gray; micritic; fresh; very strong; hard; w/occasional stylolites; (Bass Islands Group). 0°,B,N,UK,Su,Ir,R @ 95.7',95.8',96.3'	Core box #8 starts @ 95.0'.
														97		484		60°,J,N,No,No,Ir,R @ 96.6'	
PQ	14	5.0	4.9	4.3	98	86								98		483		0°,B,N,UK,Su,Ir,R @ 97.5'	
														99		482		80°,J,T,Fi @ 98.5-99.7' 0°,B,N,UK,Su,Ir,R @ 98.6',99.0'	
										100.0				100		481			
														101		480		0°,B,N,No,No,Ir,R @ 101.1' 90°,J,T,H,Ir @ 101.1-101.7' 0°,B,N,No,No,Ir,R @ 101.6'	
														102		479		60°,J,N,No,No,Ir,R @ 102.2', 102.3'	
PQ	15	5.2	4.7	3.8	90	73								103		478			
														104		477		0°,B,N,No,No,Ir,R @ 103.7',103.9'	
														105				90°,J,Ca,Fi,Ir,R @ 104.4-105.0'	

BLACK & VEATCH

BORING LOG

BORING NO. FWS/ACB-C1

CLIENT	PROJECT	PROJECT NO.
Detroit Edison	Fermi 3 COL Application	147483

PROJECT LOCATION	COORDINATES	GROUND ELEVATION (DATUM)	TOTAL DEPTH
Monroe, MI	N 6203.1' E 4776.3'	581.4 ft (NAVD 88)	105.2 (feet)

SURFACE CONDITIONS	COORDINATE SYSTEM	DATE START	DATE FINISHED
Asphalt Parking Lot		08/25/07	08/26/07

LOGGED BY	CHECKED BY	APPROVED BY
Grainger/Bonnie TB	Dogbey/Bonnie TB	Meyer Em

SAMPLING							CORING									
SAMPLE TYPE	SAMPLE NUMBER	SET 6 INCHES	2ND 6 INCHES	3RD 6 INCHES	N VALUE	SAMPLE RECOVERY	CORE SIZE	RUN NUMBER	RUN LENGTH	RUN RECOVERY	RQD RECOVERY	PERCENT RECOVERY	RQD	DEPTH (FEET)	SAMPLE TYPE	ELEVATION (FEET)	GRAPHIC LOG	CLASSIFICATION OF MATERIALS	REMARKS
														105		476			Bottom of boring @ 105.2'. Water level @ 17.4' @ completion of drilling. Boring backfilled w/bentonite chips on 09/13/07.
														106		475			
														107		474			
														108		473			
														109		472			
														110		471			
														111		470			
														112		469			
														113		468			
														114		467			
														115		466			
														116		465			
														117		464			
														118		463			
														119		462			
														120					

5/13/2008 3:11 PM DTE - Fermi 3 Geotech

BLACK & VEATCH

BORING LOG

BORING NO. FWS/ACB-C1a

SHEET 1 OF 1

CLIENT	PROJECT	PROJECT NO.
Detroit Edison	Fermi 3 COL Application	147483

PROJECT LOCATION	COORDINATES	GROUND ELEVATION (DATUM)	TOTAL DEPTH
Monroe, MI	N 6200.6' E 4782.7'	581.4 ft (NAVD 88)	9.9 (feet)

SURFACE CONDITIONS	COORDINATE SYSTEM	DATE START	DATE FINISHED
Asphalt Parking Lot	Plant	08/23/07	08/24/07

LOGGED BY	CHECKED BY	APPROVED BY
GEO for Grainger	Dogbey/Bonnie TB	Meyer EM

SAMPLING							CORING									
SAMPLE TYPE	SAMPLE NUMBER	SET 6 INCHES	2ND 6 INCHES	3RD 6 INCHES	N VALUE	SAMPLE RECOVERY	CORE SIZE	RUN NUMBER	RUN LENGTH	RUN RECOVERY	RQD RECOVERY	PERCENT RECOVERY	RQD	DEPTH (FEET)	SAMPLE TYPE	ELEVATION (FEET)	GRAPHIC LOG	CLASSIFICATION OF MATERIALS	REMARKS
														0		581		ASPHALT; 0.3	Boring advanced w/vacuum excavation.
														1		580		COBBLES with Gravel - About 60% angular, cubical to elongated, hard cobbles w/max size 12"; about 25% fine to coarse, angular, hard gravel; about 10% fine to course, angular hard sand; about 5% fines; gray; moist; strong reaction w/HCl; homogeneous; (Fill).	
														2		579			
			3.0											3		578			Below 3.0' continued w/4" ID sonic continuous sampler w/ nominal 6" temporary steel casing advanced w/sampler.
S	1					1.5								4		577			
			5.0											5		576			
														6		575			Encountered piece of PVC pipe between 5.0-7.0' (later determined to be from a sewer line).
S	2					4.0								7		574			
														8		573			
														9		572		9.5	
														10		571		PEAT (PT) - About 100% black; fibrous organic material.	Bottom of boring @ 9.9'. Boring abandoned & relocated due to sewer line. Area excavated to repair sewer line.
														11		570			
														12		569			
														13		568			
														14		567			
														15					

5/10/2008 2:47 PM DTE - Fermi 3 Geotech

BLACK & VEATCH

BORING LOG

BORING NO. HM-E1
SHEET 1 OF 6

CLIENT	PROJECT	PROJECT NO.
Detroit Edison	Fermi 3 COL Application	147483

PROJECT LOCATION	COORDINATES	GROUND ELEVATION (DATUM)	TOTAL DEPTH
Monroe, MI	N 5985.3' E 4530.2'	581.0 ft (NAVD 88)	75.5 (feet)

SURFACE CONDITIONS	COORDINATE SYSTEM	DATE START	DATE FINISHED
Paved Parking Area	Plant	08/23/07	08/25/07

LOGGED BY	CHECKED BY	APPROVED BY
RC for TB for Grainger/Mass	Dogbey/Grainger	Meyer

SAMPLING: SAMPLE TYPE	SAMPLE NUMBER	SET 6 INCHES	2ND 6 INCHES	3RD 6 INCHES	N VALUE	SAMPLE RECOVERY
CORING: CORE SIZE	RUN NUMBER	RUN LENGTH	RUN RECOVERY	RQD RECOVERY	PERCENT RECOVERY	RQD
S	1		3.0			1.5
S	2		5.0			2.0
S	3		10.0			3.5

DEPTH (FEET)	ELEVATION (FEET)	CLASSIFICATION OF MATERIALS	REMARKS
0	581	ASPHALT 0.3	Boring advanced w/vacuum excavation.
1	580	COBBLES - About 60% angular, cubical to elongated, hard, cobbles w/max. size 12"; about 25% fine to coarse, angular, elongated to cubical, hard gravel w/ max. size 3"; about 15% fine to coarse, angular, hard, sand; gray; moist; strong reaction w/HCl; homogeneous; (Fill).	
2	579		
3	578		Below 3.0' continued w/4" ID sonic continuous sampler w/ nominal 6" temporary steel casing advanced w/sampler.
4	577		Discrete sample collected from S1 @ 4.0-4.2'.
5	576		
6	575		
7	574		Discrete sample collected from S2 @ 7.0-7.3'.
8	573		
9	572		
10	571		
11	570		
12	569		
13	568	13.0 Fat CLAY (CH) - About 100% high plasticity, high toughness, no dilatancy, high dry strength fines; gray (10YR 6/1) & yellowish brown, mottled; soft; moist; no reaction w/HCl; homogeneous; (Lacustrine Deposit).	
14	567		
15	566		

5/13/2008 3:34 PM DTE - Fermi 3 Geotech

BLACK & VEATCH

BORING LOG

BORING NO. HM-E1

CLIENT	PROJECT	PROJECT NO.
Detroit Edison	Fermi 3 COL Application	147483

PROJECT LOCATION	COORDINATES		GROUND ELEVATION (DATUM)	TOTAL DEPTH
Monroe, MI	N 5985.3'	E 4530.2'	581.0 ft (NAVD 88)	75.5 (feet)

SURFACE CONDITIONS	COORDINATE SYSTEM	DATE START	DATE FINISHED
Paved Parking Area	Plant	08/23/07	08/25/07

LOGGED BY	CHECKED BY	APPROVED BY
GCC for TB for Grainger/Mass	EM for GCC for Dogbey/Grainger	EM Meyer

SAMPLE TYPE	SAMPLE NUMBER	SET 6 INCHES	2ND 6 INCHES	3RD 6 INCHES	N VALUE	SAMPLE RECOVERY	DEPTH (FEET)	ELEVATION (FEET)	CLASSIFICATION OF MATERIALS	REMARKS
							15	566		
			16.0				16	565	16.0 Lean CLAY (CL) - About 90% LL=36,PL=18, no dilatancy, high dry strength fines; about 10% sand; light olive brown; soft; moist; strong reaction w/HCl; homogeneous; (Lacustrine Deposit).	Set nominal 6" temporary steel casing to 15.5'. Hole open to 16.0. Below 16.0' continue w/NWJ rods & 4½" tricone bit using water as drilling fluid. SPT performed w/D-50 automatic hammer. PP = 2.9 TSF @ 18.0'. TV = 0.57 TSF @ 18.0'.
TW	4					1.7	17	564		
							18	563		
							19	562	19.0 Lean CLAY (CL) - About 90% medium plasticity, medium toughness, no dilatancy, high dry strength fines; about 10% fine to medium sand; yellowish brown & light gray; firm; moist; strong reaction w/HCl; banded; (Glacial Till).	
SPT	5	3	4	8	12	1.5	20	561		
							21	560		
							22	559		
TW	6					1.6	23	558	grades dark grayish brown; homogeneous @ 23.5'	PP = 4.5 TSF @ 23.5'. T = 0.65 TSF @ 23.5'.
							24	557		
							25	556	24.5 Sandy Lean CLAY (CL) - About 60% medium plasticity, medium toughness, no dilatancy, high dry strength fines; about 40% fine to coarse, subangular to angular, hard sand; trace fine, subangular, hard gravel; dark gray; very hard; moist; strong reaction w/ HCl, homogeneous; (Glacial Till).	
SPT	7	21	23	24	47	1.1	26	555		
							27	554	27.0 Clayey SAND (SC) - About 80% fine to medium, sand; about 20% medium plasticity, low toughness, slow dilatancy, medium dry strength fines; dark grayish brown; very dense; wet; strong reaction w/ HCl; homogeneous; (Glacial Till).	Tricone refusal @ 27.6'. Below 27.6' continued w/4" ID sonic continuous sampler w/ nominal 6" temporary steel casing advanced
SPT	8	23	50/1"	-	50+	0.4				
			27.6				28	553	27.2 DOLOMITE; gray; crystalline; micritic; slightly weathered; strong; hard; (Bass Islands Group).	
S	9					2.9	29	552		
							30	551		

5/13/2008 3:34 PM DTE - Fermi 3 Geotech

BLACK & VEATCH

BORING LOG

BORING NO. HM-E1

CLIENT	PROJECT	PROJECT NO.
Detroit Edison	Fermi 3 COL Application	147483

PROJECT LOCATION	COORDINATES	GROUND ELEVATION (DATUM)	TOTAL DEPTH
Monroe, MI	N 5985.3' E 4530.2'	581.0 ft (NAVD 88)	75.5 (feet)

SURFACE CONDITIONS	COORDINATE SYSTEM	DATE START	DATE FINISHED
Paved Parking Area	Plant	08/23/07	08/25/07

LOGGED BY	CHECKED BY	APPROVED BY
GC for TB for Grainger/Mass	SP for GC for Dogbey/Grainger	SM Meyer

SAMPLING							CORING									
SAMPLE TYPE	SAMPLE NUMBER	SET 6 INCHES	2ND 6 INCHES	3RD 6 INCHES	N VALUE	SAMPLE RECOVERY	CORE SIZE	RUN NUMBER	RUN LENGTH	RUN RECOVERY	RQD RECOVERY	PERCENT RECOVERY	RQD	DEPTH (FEET)	SAMPLE TYPE	ELEVATION (FEET)	GRAPHIC LOG

CLASSIFICATION OF MATERIALS	REMARKS
	w/sampler. Sonic core stored in box labeled SC4. Set nominal 6" temporary steel casing to 30.5'. Below 30.5' continued w/ triple tube wire line core barrel w/diamond bit using water as drilling fluid. Core box #1 starts @ 30.5'.
10°,B,N,No,No,Ir @ 30.8',31.6',31.7'	
85°,J,N,No,No,Ir @ 31.2'	
30°,J,N,No,No,Ir @ 32.2'	
10°,B,N,No,No,Ir @ 32.5',33.3'	
34.1	
DOLOMITE; light gray & dark gray, mottled; micritic; fresh; very strong; hard; (Bass Islands Group).	
0°,B,N,UK,Pa,Ir @ 34.1',35.0',35.1',36.0'	
85°,J,N,No,No,Ir @ 34.5-35.6', 36.2-36.5'	
50°,J,N,No,No,Ir @ 35.8'	
36.6	
DOLOMITE; dark grayish brown; pitted; crystalline; micritic; fresh; very strong; hard; banded; w/stylolites; (Bass Islands Group).	
0°,B,N,UK,Pa,Ir @ 36.6',37.4',37.8'	
85°,J,N,No,No,Ir @ 37.4-38.4'	
90°,J,T,No,No,Ir @ 38.0-41.7'	
0°,B,N,No,No,Ir @ 38.9',39.5'	
90°,joints,intersecting at 90° @ 39.5-40.5'	Core box #2 starts @ 39.3'.
0°,B,N,No,No,Ir @ 40.5'	
0°,B,N,No,No,Ir @ 42.1',42.4',42.7', 42.9'	
90°,joints,intersecting at 90° @ 42.1-42.6'	
pitting stops @ 42.1'	
bedding convoluted @ 43.0-49.0'	
85°,parallel joints,T,H,Pa @ 43.5-44.5'	
10°,B,T,UK,Sp,Ir @ 44.5', 45.1', 45.2'	
fractured @ 44.5-45.2'	

														30		551	
			30.5											31		550	
PQ	1	3.0	3.0	1.5	100	50								32		549	
														33		548	
			33.5											34		547	
PQ	2	5.0	5.0	1.6	100	32								35		546	
														36		545	
														37		544	
														38		543	
			38.5											39		542	
PQ	3	4.7	4.7	0.9	100	19								40		541	
														41		540	
														42		539	
			43.2											43		538	
PQ	4	2.3	2.3	1.1	100	48								44		537	
														45		536	

BLACK & VEATCH

BORING LOG

BORING NO. HM-E1

CLIENT	PROJECT	PROJECT NO.
Detroit Edison	Fermi 3 COL Application	147483

PROJECT LOCATION	COORDINATES	GROUND ELEVATION (DATUM)	TOTAL DEPTH
Monroe, MI	N 5985.3' E 4530.2'	581.0 ft (NAVD 88)	75.5 (feet)

SURFACE CONDITIONS	COORDINATE SYSTEM	DATE START	DATE FINISHED
Paved Parking Area	Plant	08/23/07	08/25/07

LOGGED BY	CHECKED BY	APPROVED BY
Grainger/Mass	Dogbey/Grainger	Meyer

SAMPLING: SAMPLE TYPE	SAMPLE NUMBER	SET 6 INCHES	2ND 6 INCHES	3RD 6 INCHES	N VALUE	SAMPLE RECOVERY	CORING: CORE SIZE	RUN NUMBER	RUN LENGTH	RUN RECOVERY	RQD RECOVERY	PERCENT RECOVERY	RQD	DEPTH (FEET)	SAMPLE TYPE	ELEVATION (FEET)	GRAPHIC LOG	CLASSIFICATION OF MATERIALS	REMARKS
														45		536			
										45.5				46		535		70°,Intersecting joints,T,No,No,Ir @ 46.5', 48.0'	
														47		534		0°,B,UK,Sp,Ir @ 47.2',47.7'	
PQ	5	5.0	4.7	1.1	94	22								48		533			Core box #3 starts @ 47.7'.
														49		532			
														50		531		49.4 DOLOMITE; oolitic; light brownish gray; crystalline; micritic; fresh; very strong; hard; w/thin parting of dark gray shale; (Bass Islands Group). 0°,B,UK,Sp,Ir @ 49.4' 85°,J,T,No,No,Ir @ 49.4-52.0'	
										50.5				51		530			
														52		529			
PQ	6	5.0	5.0	3.0	100	60								53		528		53.0 DOLOMITE; light gray; micritic; slightly weathered; strong; hard; banded; w/shale partings & stylolites; (Bass Islands Group). brecciated, healed @ 53.0-53.7' convoluted bedding @ 53.7-55.1'	
														54		527			
														55		526		shale; dark gray @ 54.7'	
										55.5				56		525			Core box #4 starts @ 56.5'.
														57		524		10°,B,N (solutioned) @ 56.9',57.3' 70°,J,T,Ir @ 56.9-57.2'	
PQ	7	5.0	5.0	2.8	100	56								58		523		90°,J,N (solutioned) @ 58.0-58.5' 10°,B,N (solutioned) @ 58.0',58.2',58.5'	
														59		522			
														60		521		10°,B,N (solutioned) @ 59.4',59.8',60.2' 85°,J,N,No,No,Ir @ 59.4-60.2'	

BLACK & VEATCH

BORING LOG

BORING NO. HM-E1
SHEET 5 OF 6

CLIENT	PROJECT	PROJECT NO.
Detroit Edison	Fermi 3 COL Application	147483

PROJECT LOCATION	COORDINATES	GROUND ELEVATION (DATUM)	TOTAL DEPTH
Monroe, MI	N 5985.3' E 4530.2'	581.0 ft (NAVD 88)	75.5 (feet)

SURFACE CONDITIONS	COORDINATE SYSTEM	DATE START	DATE FINISHED
Paved Parking Area	Plant	08/23/07	08/25/07

LOGGED BY	CHECKED BY	APPROVED BY
Grainger/Mass	Dogbey/Grainger	Meyer

SAMPLING: SAMPLE TYPE	SAMPLE NUMBER	SET 6 INCHES	2ND 6 INCHES	3RD 6 INCHES	N VALUE	SAMPLE RECOVERY	CORING: CORE SIZE	RUN NUMBER	RUN LENGTH	RUN RECOVERY	RQD RECOVERY	PERCENT RECOVERY	RQD	DEPTH (FEET)	SAMPLE TYPE	ELEVATION (FEET)	GRAPHIC LOG	CLASSIFICATION OF MATERIALS	REMARKS
														60		521		60.2 BRECCIA; dolomite matrix; light gray; micritic; healed; slightly weathered; hard; w/gray dolomite; micritic clasts; w/stylolites; (Bass Islands Group). 85°,J,N,No,No,Ir @ 60.5-61.8'	
										60.5				61		520			
														62		519		30°,J,N,No,No,Ir @ 61.8, 62.3' 0°,B (solutioned) @ 62.2, 63.7'	
							PQ	8	5.0	5.0	2.5	100	50	63		518		70°,J,N,No,No,Ir @ 62.7'	
														64		517		70°,J,N,No,No,Ir @ 64.0-64.3'	
														65		516			Core box #5 starts @ 65.0'.
										65.5								60°,J,N (solutioned),Cl,Pa,Ir @ 65.5'	
														66		515			
														67		514			
							PQ	9	5.0	5.0	4.2	100	84	68		513			
														69		512			
																		0°,B,N,H,Pa,Ir @ 69.5'	
														70		511		0°,B,N (solutioned) @ 70.0', 70.5'	
										70.5								70.2 DOLOMITE; light gray; micritic; slightly weathered; very strong; hard; banded; w/argillaceous partings & stylolites; (Bass Islands Group). 0°,B,T,UK,Pa,Ir @ 71.2', 73.9'	
														71		510			
														72		509			
							PQ	10	5.0	5.0	4.4	100	88	73		508			
																		fractured, solutioned @ 73.5-73.8' 90°,J,T,No,No,Ir @ 73.5-74.0' 0°,B,N (solutioned) @ 73.8', 74.2'	Core box #6 starts @ 73.5'.
														74		507			
														75		506			

BLACK & VEATCH

BORING LOG

BORING NO. HM-E1

CLIENT	PROJECT	PROJECT NO.
Detroit Edison	Fermi 3 COL Application	147483

PROJECT LOCATION	COORDINATES	GROUND ELEVATION (DATUM)	TOTAL DEPTH
Monroe, MI	N 5985.3' E 4530.2'	581.0 ft (NAVD 88)	75.5 (feet)

SURFACE CONDITIONS	COORDINATE SYSTEM	DATE START	DATE FINISHED
Paved Parking Area	Plant	08/23/07	08/25/07

LOGGED BY	CHECKED BY	APPROVED BY
Grainger/Mass	Dogbey/Grainger	Meyer

SAMPLING: SAMPLE TYPE | SAMPLE NUMBER | SET 6 INCHES | 2ND 6 INCHES | 3RD 6 INCHES | N VALUE | SAMPLE RECOVERY

CORING: CORE SIZE | RUN NUMBER | RUN LENGTH | RUN RECOVERY | RQD RECOVERY | PERCENT RECOVERY | RQD

DEPTH (FEET)	SAMPLE TYPE	ELEVATION (FEET)	GRAPHIC LOG	CLASSIFICATION OF MATERIALS	REMARKS
75		506		pitted @ 75.0-75.1'	
76		505			Bottom of boring @ 75.5'. Water level at 20.2' @ completion of drilling. Boring backfilled with bentonite chips on 09/13/07.
77		504			
78		503			
79		502			
80		501			
81		500			
82		499			
83		498			
84		497			
85		496			
86		495			
87		494			
88		493			
89		492			
90		491			

BLACK & VEATCH

BORING LOG

BORING NO. PS-E1

SHEET 1 OF 3

CLIENT	PROJECT	PROJECT NO.
Detroit Edison	Fermi 3 COL Application	147483

PROJECT LOCATION	COORDINATES	GROUND ELEVATION (DATUM)	TOTAL DEPTH
Monroe, MI	N 6164.9' E 4247.2'	579.9 ft (NAVD 88)	28.8 (feet)

SURFACE CONDITIONS	COORDINATE SYSTEM	DATE START	DATE FINISHED
Hummock spoil area	Plant	08/28/07	08/29/07

LOGGED BY	CHECKED BY	APPROVED BY
Grainger	Dogbey/Grainger	Meyer

SAMPLING							CORING										
SAMPLE TYPE	SAMPLE NUMBER	SET 6 INCHES	2ND 6 INCHES	3RD 6 INCHES	N VALUE	SAMPLE RECOVERY	CORE SIZE	RUN NUMBER	RUN LENGTH	RUN RECOVERY	RQD RECOVERY	PERCENT RECOVERY	RQD	DEPTH (FEET)	SAMPLE TYPE	ELEVATION (FEET)	GRAPHIC LOG	CLASSIFICATION OF MATERIALS	REMARKS
														0		579		Well graded SAND with Silt (SW-SM) - About 90% fine to medium sand; about 10% medium plasticity, medium toughness, no dilatancy fines; dark grayish brown; moist; (Fill).	Boring advanced w/4¼" ID, 8" OD hollow stem augers. SPT performed w/D-50 automatic hammer.
														1		578			
														2		577			
														3		576			
SPT	1	1	4	8	12	0.8								4		575		GRAVEL & COBBLES; medium dense; (Fill). 3.8	Gravel lodged @ tip of spoon.
														5		574			
														6		573			
														7		572			
														8		571		PEAT (PT) - About 100% plant tissue, fibrous; very soft; (Lacustrine Deposit). 8.3	
SPT	2	1/18"	0	0	0	1.2								9		570		1" thick very dark gray fat clay; high plasticity, high toughness, no dilatancy @ 9.5'	
														10		569		Lean CLAY (CL) - About 94% LL=46, PL=16, no dilatancy, high dry strength fines; about 6% sand; greenish gray; moist; no reaction w/HCl; homogeneous; (Lacustrine Deposit). 10.3	
TW	3					0.0								11		568			
														12		567			
														13		566			
														14		565			PP = 0.25 TSF @ 15.5'.
TW	4					1.5								15					

BLACK & VEATCH

BORING LOG

BORING NO. PS-E1

CLIENT	PROJECT	PROJECT NO.
Detroit Edison	Fermi 3 COL Application	147483

PROJECT LOCATION	COORDINATES	GROUND ELEVATION (DATUM)	TOTAL DEPTH
Monroe, MI	N 6164.9' E 4247.2'	579.9 ft (NAVD 88)	28.8 (feet)

SURFACE CONDITIONS	COORDINATE SYSTEM	DATE START	DATE FINISHED
Hummock spoil area	Plant	08/28/07	08/29/07

LOGGED BY	CHECKED BY	APPROVED BY
GCG for Grainger	GCG for Dogbey/Grainger	Meyer

SAMPLING: SAMPLE TYPE	SAMPLE NUMBER	SET 6 INCHES	2ND 6 INCHES	3RD 6 INCHES	N VALUE	SAMPLE RECOVERY	CORING: CORE SIZE	RUN NUMBER	RUN LENGTH	RUN RECOVERY	RQD RECOVERY	PERCENT RECOVERY	RQD	DEPTH (FEET)	ELEVATION (FEET)	CLASSIFICATION OF MATERIALS	REMARKS
														15			
														16	564		
														17	563		
SPT	5	WOH	2	3	5	1.5								17.0		Lean CLAY (CL) - About 90% medium plasticity, medium toughness, no dilatancy, high dry strength fines; about 10% fine to medium, rounded, hard gravel; dark grayish brown; firm; moist; weak reaction w/HCl; homogeneous; (Glacial Till).	
														18	562		
														19	561		
TW	6					0.5								20	560		
														21	559	grades w/few gravel @ 21.0'	PP = 1.25 TSF @ 20.5'.
														21.8			
														22	558	Lean CLAY with Sand (CL) - About 85% medium plasticity, medium toughness, no dilatancy, high dry strength fines; about 15% fine to coarse, rounded to subrounded, hard sand; very dark gray; hard; moist; strong reaction w/HCl; homogeneous; (Glacial Till).	
														23	557		
SPT	7	10	20	25	45	1.5								24	556		
														25	555		
														26	554		
														27	553	grades w/few cobbles @ 27.0'	
														28	552		Hard drilling @ 28.0'. Auger refusal at 28.8'.
SPT	8	5	50/4"	-	50+	NR								29	551		Bottom of boring @ 28.8'. Water level @ 8.6' @ completion of
														30	550		

BLACK & VEATCH

BORING LOG

BORING NO. PS-E1

CLIENT	PROJECT	PROJECT NO.
Detroit Edison	Fermi 3 COL Application	147483

PROJECT LOCATION	COORDINATES	GROUND ELEVATION (DATUM)	TOTAL DEPTH
Monroe, MI	N 6164.9' E 4247.2'	579.9 ft (NAVD 88)	28.8 (feet)

SURFACE CONDITIONS	COORDINATE SYSTEM	DATE START	DATE FINISHED
Hummock spoil area	Plant	08/28/07	08/29/07

LOGGED BY	CHECKED BY	APPROVED BY
Grainger	Dogbey/Grainger	Meyer

SAMPLING							CORING							DEPTH (FEET)	SAMPLE TYPE	ELEVATION (FEET)	GRAPHIC LOG	CLASSIFICATION OF MATERIALS	REMARKS
SAMPLE TYPE	SAMPLE NUMBER	SET 6 INCHES	2ND 6 INCHES	3RD 6 INCHES	N VALUE	SAMPLE RECOVERY	CORE SIZE	RUN NUMBER	RUN LENGTH	RUN RECOVERY	RQD RECOVERY	PERCENT RECOVERY	RQD						
														30					drilling. Backfilled w/ bentonite chips on 08/29/07.
														31		549			
														32		548			
														33		547			
														34		546			
														35		545			
														36		544			
														37		543			
														38		542			
														39		541			
														40		540			
														41		539			
														42		538			
														43		537			
														44		536			
														45		535			

BLACK & VEATCH

BORING LOG

BORING NO. RB-C1

CLIENT	PROJECT	PROJECT NO.
Detroit Edison	Fermi 3 COL Application	147483

PROJECT LOCATION	COORDINATES	GROUND ELEVATION (DATUM)	TOTAL DEPTH
Monroe, MI	N 6273.2' E 4445.3'	579.2 ft (NAVD 88)	271.0 (feet)

SURFACE CONDITIONS	COORDINATE SYSTEM	DATE START	DATE FINISHED
Gravel Parking Lot	Plant	06/14/07	07/26/07

LOGGED BY	CHECKED BY	APPROVED BY
Grainger/Mass	Dogbey/Mass	Meyer

SAMPLING							CORING									
SAMPLE TYPE	SAMPLE NUMBER	SET 6 INCHES	2ND 6 INCHES	3RD 6 INCHES	N VALUE	SAMPLE RECOVERY	CORE SIZE	RUN NUMBER	RUN LENGTH	RUN RECOVERY	RQD RECOVERY	PERCENT RECOVERY	RQD	DEPTH (FEET)	SAMPLE TYPE	ELEVATION (FEET)	GRAPHIC LOG	CLASSIFICATION OF MATERIALS	REMARKS
														0		579		Well graded GRAVEL with Silt and Sand (GW - GM) - About 75% fine to coarse, angular, hard gravel w/ max. size 3"; about 15% fine to coarse, angular, hard sand; about 10% fines (silt); dark grayish brown; moist; strong reaction w/HCl; homogeneous; (Fill).	Boring advanced w/vacuum excavation.
														1		578			
														2		577			
														3		576			
														4		575			
										5.0				5		574			
S	1					2.0								6		573		cobbles @ 5.5'	Below 5.0' continued w/4" ID sonic continuous sampler w/ nominal 6" temporary steel casing advanced w/sampler. Discrete sample S1 collected from S-1.
														7		572			
														8		571			
														9		570			
										10.0				10		569		10.3	
														11		568		Fat CLAY (CH) - About 100% high plasticity, high toughness, no dilatancy fines; light gray & yellowish red, mottled; soft; moist; weak reaction w/HCl; (Lacustrine Deposit).	Gray clay on sonic sample barrel after 10' to 15' sample attempt.
														12		567			
S	2					0.0								13		566			
														14		565			
														15					

BORING LOG

CLIENT	PROJECT	PROJECT NO.
Detroit Edison	Fermi 3 COL Application	147483

PROJECT LOCATION	COORDINATES	GROUND ELEVATION (DATUM)	TOTAL DEPTH
Monroe, MI	N 6273.2' E 4445.3'	579.2 ft (NAVD 88)	271.0 (feet)

SURFACE CONDITIONS	COORDINATE SYSTEM	DATE START	DATE FINISHED
Gravel Parking Lot	Plant	06/14/07	07/26/07

LOGGED BY	CHECKED BY	APPROVED BY
Grainger/Mass	Dogbey/Mass	Meyer

SAMPLING: SAMPLE TYPE	SAMPLE NUMBER	SET 6 INCHES	2ND 6 INCHES	3RD 6 INCHES	N VALUE	SAMPLE RECOVERY	CORING: CORE SIZE	RUN NUMBER	RUN LENGTH	RUN RECOVERY	RQD RECOVERY	PERCENT RECOVERY	RQD	DEPTH (FEET)	ELEVATION (FEET)	CLASSIFICATION OF MATERIALS	REMARKS
SPT	2	2	2	3	5	1.3								15	564		
																15.5 — Lean CLAY with Sand (CL) - About 82% LL=37, PL=18, no dilatancy, medium dry strength fines; about 18% fine to medium sand; reddish brown & yellowish red; soft; moist; strong reaction w/HCl; homogeneous; (Glacial Till).	Set nominal 6" temporary steel casing to 15.0'. Below 15.0' continued w/ NWJ rods & 4½" tricone bit using bentonite mud as drilling fluid. SPT performed w/D-50 automatic hammer. Split SPT-2 into two jars, A & B
														16	563		
														17	562		
														18	561		
														19	560		
P	3					0.0								20	559	20.0 — Lean CLAY with Sand (CL) - About 71% LL=23, PL=13, slow dilatancy, high dry strength fines; about 27% fine to coarse, rounded to subrounded sand; about 2% fine to coarse, subangular, hard gravel; (Glacial Till).	Attempted pitcher sample @ 20', refusal to sampler @ 20.2'.
TW	4					1.5								21	558		
														22	557		Thin wall refusal @ 22.5'. PP>4.5 TSF @ 22.5'.
														23	556		
														24	555	23.8 — Sandy Silty CLAY (CL-ML) - About 52% LL=18, PL=11, slow dilatancy, high dry strength fines; about 35% fine to coarse, rounded to subrounded sand; about 13% fine to coarse, subangular, hard gravel; (Glacial Till).	
														25	554		
SPT	5	10	13	18	31	1.3								26	553		
														27	552		
														28	551		
			29.0											29	550	29.0 — DOLOMITE; undifferentiated.	Tricone bit refusal @ 29.0'. Below 29.0'
														30			

BLACK & VEATCH

BORING LOG

BORING NO. RB-C1

CLIENT	PROJECT	PROJECT NO.
Detroit Edison	Fermi 3 COL Application	147483

PROJECT LOCATION	COORDINATES	GROUND ELEVATION (DATUM)	TOTAL DEPTH
Monroe, MI	N 6273.2' E 4445.3'	579.2 ft (NAVD 88)	271.0 (feet)

SURFACE CONDITIONS	COORDINATE SYSTEM	DATE START	DATE FINISHED
Gravel Parking Lot	Plant	06/14/07	07/26/07

LOGGED BY	CHECKED BY	APPROVED BY
Grainger/Mass	Dogbey/Mass	Meyer

SAMPLING: SAMPLE TYPE	SAMPLE NUMBER	SET 6 INCHES	2ND 6 INCHES	3RD 6 INCHES	N VALUE	SAMPLE RECOVERY	CORING: CORE SIZE	RUN NUMBER	RUN LENGTH	RUN RECOVERY	RQD RECOVERY	PERCENT RECOVERY	RQD	DEPTH (FEET)	ELEVATION (FEET)	CLASSIFICATION OF MATERIALS	REMARKS
														30	549		continued w/4" ID sonic continuous sampler w/ nominal 6" temporary steel casing advanced w/sampler.
S	6					5.0								31	548	DOLOMITE; dark gray; micritic; crystalline; slightly weathered; very strong; very hard; medium bedded; (Bass Islands Group). soft weathered bed @ 32.0-33.0'	
														32	547		
														33	546	fractured along 90° J @ 33.0-34.0'	
			34.0											34	545	DOLOMITE; very dark grayish brown; vuggy; fine grained (crystalline); slightly weathered; very strong; hard; some vugs filled w/calcium carbonate; (Bass Islands Group). 90°,J,No,No,Pl,SR @ 35.0-38.2'	Set nominal 6" temporary steel casing to 33.6'. Below 34.0' continued w/ triple tube wire line core barrel w/diamond bit using water as drilling fluid. Core box #1 starts @ 34.0'. Water level @ 9.0' prior to drilling on 07/13/07.
														35	544		
HQ	1	5.0	5.0	2.1	100	42								36	543	DOLOMITE; dark gray; micritic; slightly weathered; very strong; hard; banded w/argillaceous dolomite; (Bass Islands Group). 0°,B,No,No,Pl,SR @ 36.7, 38.6' 90°,J,No,No,Pl,SR @ 36.7-38.6'	
														37	542		
														38	541	90°,J,No,No,Pl,SR @ 37.7-38.8'	Drill chatter @ 34.5'. Drill chatter @ 35.5'.
			39.0											39	540	70°,J,No,No,Pl,SR @ 39.0-39.2', 39.2-39.8' closely spaced stylolites @ 39.0-40.1'	
														40	539		
														41	538	90°,J,Ca,Fi,Pl,SR @ 40.4-40.8' highly fractured @ 40.8-42.4' grades dark grayish brown @ 40.8'	
HQ	2	5.0	4.9	2.9	98	58								42	537		Drill chatter @ about 42.0'.
														43	536	70°,J,T,Ca,Fi,Pl @ 42.4-43.0' closely spaced stylolites @ 42.4-42.6'	Drill chatter @ about 42.5'.
																closely spaced stylolites @ 43.5'	
			44.0											44	535		Water level @ 10.5' prior to drilling on 07/14/07.
														45		70°,J,Ca,Pa,Pl,SR @ 44.4-44.8'	

BLACK & VEATCH

BORING LOG

BORING NO. RB-C1

CLIENT	PROJECT	PROJECT NO.
Detroit Edison	Fermi 3 COL Application	147483

PROJECT LOCATION	COORDINATES	GROUND ELEVATION (DATUM)	TOTAL DEPTH
Monroe, MI	N 6273.2' E 4445.3'	579.2 ft (NAVD 88)	271.0 (feet)

SURFACE CONDITIONS	COORDINATE SYSTEM	DATE START	DATE FINISHED
Gravel Parking Lot	Plant	06/14/07	07/26/07

LOGGED BY	CHECKED BY	APPROVED BY
Grainger/Mass	Dogbey/Mass	Meyer

SAMPLING: SAMPLE TYPE	SAMPLE NUMBER	SET 6 INCHES	2ND 6 INCHES	3RD 6 INCHES	N VALUE	SAMPLE RECOVERY

CORING: CORE SIZE	RUN NUMBER	RUN LENGTH	RUN RECOVERY	RQD RECOVERY	PERCENT RECOVERY	RQD
HQ	3	5.0	5.0	2.0	100	40
HQ	4	5.0	5.0	1.9	100	38
HQ	5	5.0	4.2	1.7	84	34

DEPTH (FEET)	ELEVATION (FEET)	CLASSIFICATION OF MATERIALS	REMARKS
45	534	very closely spaced stylolites @ 44.9' 70°,J,No,No,Pl,SR @ 45.0-45.4'	
46	533	90°,J,Ca,Pa,WA,SR @ 45.7-47.4'	
47	532	40°,J,No,No,Pl,SR @ 47.2-47.4'	
48	531	grades w/dolomite partings; argillaceous; dark gray, banded @ 47.4' 90°,J,Ca,Pa,Pl,SR @ 47.5-48.1' 60°,J,No,No,Pl,SR @ 47.6-47.9' very closely spaced stylolites @ 48.4', 48.6-48.9'	Core box #2 starts @ 48.4'.
49	530	70°,J,Cl,Pa,Pl,SR @ 48.8-49.2'	
50	529	90°,J,VN,Ca,Pa,Pl,SR @ 49.7-50.5'	
51	528	90°,J,UK,Pa,Pl,SR @ 50.2-50.5' (2) claystone parting; black; fresh; moderately strong; medium hard; 0.03' thick @ 50.5'	
52	527	50.5 DOLOMITE; dark gray; vuggy; micritic; fresh to slightly weathered; strong; very hard; some vugs filled w/calcium carbonate; (Bass Islands Group). 80°,J,Ca,Pa,Pl,R @ 50.8-52.3' 90°,J,Ca,Pa,Pl,SR @ 51.1-51.9' 50°,J,Ca,Pa,Pl,SR @ 51.4-51.5'	
53	526	0°,B,UK,Pa,Pl,SR @ 52.5' 30°,J,No,No,Pl,SR @ 52.7' fractured @ 53.0-53.6' 30°,J,N,Pl @ 53.6'	
54	525	90°,J,No,No,WA,R @ 54.6-54.8'	Drill chatter @ 54.5'.
55	524	highly fractured @ 55.1-55.6'	
56	523	grades grayish brown; w/closely to moderately wide spaced stylolites; fewer vugs @ 55.6'	
57	522	80°,J,No,No,Pl,SR @ 56.4-56.9'	
58	521	70°,J,UK,Pa,Pl,SR @ 57.3-57.6' 90°,J,No,No,Pl,R @ 57.7-58.0'	Core loss @ 58.2-59.1'.
59	520		No drilling fluid return @ 59.0'.
60		highly fractured @ 59.7-60.9'	

49.0 54.0 59.0

BLACK & VEATCH

BORING LOG

BORING NO. RB-C1

CLIENT	PROJECT	PROJECT NO.
Detroit Edison	Fermi 3 COL Application	147483

PROJECT LOCATION	COORDINATES	GROUND ELEVATION (DATUM)	TOTAL DEPTH
Monroe, MI	N 6273.2' E 4445.3'	579.2 ft (NAVD 88)	271.0 (feet)

SURFACE CONDITIONS	COORDINATE SYSTEM	DATE START	DATE FINISHED
Gravel Parking Lot	Plant	06/14/07	07/26/07

LOGGED BY	CHECKED BY	APPROVED BY
Grainger/Mass	Dogbey/Mass	Meyer

SAMPLING							CORING									
SAMPLE TYPE	SAMPLE NUMBER	SET 6 INCHES	2ND 6 INCHES	3RD 6 INCHES	N VALUE	SAMPLE RECOVERY	CORE SIZE	RUN NUMBER	RUN LENGTH	RUN RECOVERY	RQD RECOVERY	PERCENT RECOVERY	RQD	DEPTH (FEET)	SAMPLE TYPE	ELEVATION (FEET)	GRAPHIC LOG	CLASSIFICATION OF MATERIALS	REMARKS
														60		519			
														61		518		DOLOMITE; argillaceous; gray; micritic; fresh; strong; hard; (Bass Islands Group).	
							HQ	6	5.0	5.0	3.5	100	70	62		517		dolomite & shale; dolomitic; white and gray, mottled; micritic to very fine grained; fresh; strong; moderately hard; 0.2' thick @ 61.9-62.1'	
														63		516		10°,J,Cl,Fi,Pl,SR @ 62.0'	
																		62.1 DOLOMITE; oolitic; light gray; medium to coarse grained (crystalline); fresh; very strong; very hard; grains approximately 0.02-0.04" diameter; (Bass Islands Group).	
										64.0				64		515			Core box #3 starts @ 64.0'
														65		514		0°,B,UK,Fi,Pl,SR @ 65.4'	
																		65.5 DOLOMITE; light gray, banded; micritic to very fine grained; fresh; moderately strong; moderately hard; w/convoluted partings of black; very fine grained; fresh; moderately strong; moderately hard shale; (Bass Islands Group).	
							HQ	7	5.0	5.0	4.3	100	86	66		513		30°,J,W,Cl,Fi,Pl,SR @ 65.7-65.8'	
														67		512		claystone band; brecciated; gray; very fine grained; highly weathered; very weak; low hardness; 0.6" thick @ 65.9'	
														68		511		0°,B,Cl,Fi,Pl,SR @ 66.3'	
										69.0				69		510		shale parting; black; very fine grained; fresh; moderately strong; moderately hard @ 68.4'	
														70		509		40°,J,Ca,Pa,Pl,R @ 70.1-70.3'	
																		highly fractured @ 70.5-71.5'	
														71		508		71.5	
							HQ	8	5.0	5.0	2.0	100	40	72		507		DOLOMITE; gray; micritic; fresh; strong; hard; w/ widely spaced stylolites; few shale partings; pitted zones; (Bass Islands Group). highly fractured @ 71.7-71.8', 72.0-72.1', 72.7-73.1' 60°,J,Ca,Pa,Pl,SR @ 72.4-72.7'	
														73		506			
																		highly fractured @ 73.6-74.9'	Drill chatter @ 73.5-74.0'.
										74.0				74		505			
														75					

BLACK & VEATCH

BORING LOG

BORING NO. RB-C1

CLIENT	PROJECT	PROJECT NO.
Detroit Edison	Fermi 3 COL Application	147483

PROJECT LOCATION	COORDINATES	GROUND ELEVATION (DATUM)	TOTAL DEPTH
Monroe, MI	N 6273.2' E 4445.3'	579.2 ft (NAVD 88)	271.0 (feet)

SURFACE CONDITIONS	COORDINATE SYSTEM	DATE START	DATE FINISHED
Gravel Parking Lot	Plant	06/14/07	07/26/07

LOGGED BY	CHECKED BY	APPROVED BY
CO for TB for Grainger/Mass	SM for TB for Dogbey/Mass	Meyer

SAMPLING: SAMPLE TYPE	SAMPLE NUMBER	SET 6 INCHES	2ND 6 INCHES	3RD 6 INCHES	N VALUE	SAMPLE RECOVERY

CORING: CORE SIZE	RUN NUMBER	RUN LENGTH	RUN RECOVERY	RQD RECOVERY	PERCENT RECOVERY	RQD
HQ	9	5.0	5.0	3.7	100	74
HQ	10	5.0	4.6	3.4	92	68
HQ	11	5.0	2.8	0.7	56	14

DEPTH (FEET)	ELEVATION (FEET)	CLASSIFICATION OF MATERIALS	REMARKS
75	504	grades light brownish gray; w/closely to moderately wide spaced stylolites @ 74.9'	
76	503		
77	502		
78	501	highly fractured @ 77.7-78.0' 30°,J,Cl,Pa,Pl,SR @ 78.0-78.2' 150°,J,Cl,Pa,Pl,SR @ 78.2-78.5'	
79	500	79.0	Core box #4 starts @ 79.0'.
80	499	grades w/increased pitted zones; some very closely spaced stylolites @ 80.0'	
81	498		
82	497	90°,J,Ca,Pa,Pl,SR @ 82.1-82.4' 30°,J,No,No,Pl,SR @ 82.3-82.4' 60°,J,Ca,Pa,Pl,SR @ 82.4'	
83	496		
84	495	84.0 highly fractured @ 84.4-87.3'	Core loss of 2.2' @ 84.4-87.3'.
85	494		
86	493		
87	492	90°,J,Cl,Pa,WA,SR @ 87.4-87.9'	
88	491	shale band; black; platy; very fine grained; fresh; moderately strong; hard @ 88.0-88.1' 90°,J,No,No,Pl,SR @ 88.1-88.3', 88.1-88.4' (2 sets) 70°,J,No,No,Pl,SR @ 88.6-88.9'	
89	490	89.0 SHALE; very dark gray; fissile; platy; very fine grained; moderately to highly weathered; very weak to moderately strong; low hardness; (Bass Islands	
90			

BLACK & VEATCH

BORING LOG

BORING NO. RB-C1

CLIENT	PROJECT	PROJECT NO.
Detroit Edison	Fermi 3 COL Application	147483

PROJECT LOCATION	COORDINATES	GROUND ELEVATION (DATUM)	TOTAL DEPTH
Monroe, MI	N 6273.2' E 4445.3'	579.2 ft (NAVD 88)	271.0 (feet)

SURFACE CONDITIONS	COORDINATE SYSTEM	DATE START	DATE FINISHED
Gravel Parking Lot	Plant	06/14/07	07/26/07

LOGGED BY	CHECKED BY	APPROVED BY
Grainger/Mass	Dogbey/Mass	Meyer

SAMPLING: SAMPLE TYPE	SAMPLE NUMBER	SET 6 INCHES	2ND 6 INCHES	3RD 6 INCHES	N VALUE	SAMPLE RECOVERY

CORING: CORE SIZE	RUN NUMBER	RUN LENGTH	RUN RECOVERY	RQD RECOVERY	PERCENT RECOVERY	RQD
HQ	12	3.8	2.0	0.0	53	0
HQ	13	1.2	92.8 0.8	0.0	67	0
HQ	14	5.0	94.0 4.8	2.4	96	48
HQ	15	5.0	99.0 4.8	0.7	96	14
			104.0			

DEPTH (FEET)	ELEVATION (FEET)	CLASSIFICATION OF MATERIALS	REMARKS
90	489	Group).	
		89.5	
		DOLOMITE; grayish brown; micritic; fresh; very strong; very hard; trace shale partings; (Bass Islands Group).	
91	488	highly fractured @ 89.5-92.8'	Drill chatter constantly @ 91.0-94.0'.
92	487		
93	486	90°,J,Cl,Fi,Pl,SR @ 92.8-93.3'	Core barrel jammed @ 92.8'.
		w/few widely spaced stylolites @ 92.8'	
94	485	highly fractured @ 94.2-94.9'	Core loss @ 94.0-94.2'.
95	484	grades very fine grained (crystalline) @ 95.0'	Drill chatter @ 94.5'.
		very closely spaced stylolites @ 95.1'	
96	483	90°,J,No,No,Pl,SR @ 95.5-96.3'	Water level @ 19.3' prior to drilling on 07/15/07.
		70°,J,No,No,Pl,SR @ 96.3-96.4'	
97	482	40°,J,No,No,Pl,SR @ 96.7-96.8'	
		140°,J,No,No,Pl,SR @ 96.7-96.8'	
		0°,B,UK,Pa,Pl,SR @ 96.8'	
		vuggy @ 97.0-97.2'	
98	481	80°,J,No,No,Pl,SR @ 97.2-97.3'	
		0°,B,No,No,Pl,R @ 97.3'	Core box #5 starts @ 97.9'.
		80°,J,Cl,Pa,Pl,SR @ 97.6-98.5'	
99	480	10°,J,Cl,Pa,Pl,SR @ 97.7'	
		30°,V,MW,Cl,Fi @ 99.2-99.3'	
		99.3	
100	479	DOLOMITE; argillaceous; gray, banded; micritic; fresh; strong; hard; w/black; very fine grained; fresh; moderately strong; moderately hard shale partings; (Bass Islands Group).	
		90°,J,Cl,Pa,Pl,SR @ 100.8-101.5'	
101	478	highly fractured @ 101.0-101.2'	
102	477	highly fractured @ 101.9-102.0'	
		90°,J,No,No,Pl,SR @ 102.0-102.1'	
		40°,J,Cl,Pa,Pl,Slk @ 102.7-103.0'	
103	476		
		90°,J,Cl,Pa,Pl,S @ 103.5-104.0'	
104	475	30°,J,Cl,Pa,Pl,SR @ 104.0'	
105			

BLACK & VEATCH

BORING LOG

BORING NO. RB-C1

CLIENT	PROJECT	PROJECT NO.
Detroit Edison	Fermi 3 COL Application	147483

PROJECT LOCATION	COORDINATES	GROUND ELEVATION (DATUM)	TOTAL DEPTH
Monroe, MI	N 6273.2' E 4445.3'	579.2 ft (NAVD 88)	271.0 (feet)

SURFACE CONDITIONS	COORDINATE SYSTEM	DATE START	DATE FINISHED
Gravel Parking Lot	Plant	06/14/07	07/26/07

LOGGED BY	CHECKED BY	APPROVED BY
GB Lee TB Lee Grainger/Mass	EM for TB Lee Dogbey/Mass	EM Meyer

SAMPLING							CORING									
SAMPLE TYPE	SAMPLE NUMBER	SET 6 INCHES	2ND 6 INCHES	3RD 6 INCHES	N VALUE	SAMPLE RECOVERY	CORE SIZE	RUN NUMBER	RUN LENGTH	RUN RECOVERY	RQD RECOVERY	PERCENT RECOVERY	RQD	DEPTH (FEET)	SAMPLE TYPE	ELEVATION (FEET)	GRAPHIC LOG	CLASSIFICATION OF MATERIALS	REMARKS
							HQ	16	5.0	4.4	2.4	88	48	105		474		highly fractured @ 104.9-105.2'	
																		90°,J,Cl,Pa,Pl,SR @ 105.7-105.8'	
														106		473		70°,J,Cl,Pa,Pl,SR @ 105.8-105.9'	
																		highly fractured @ 106.0-106.8'	
														107		472		80°,J,Ca,Pa,Pl,SR @ 106.8-107.3'	
																		30°,J,Cl,Fi,Pl,SR @ 107.1-107.2'	
																		0°,J,Cl,Fi,Pl,SR @ 107.6'	
														108		471		10°,V,N,Cl,Fi,Pl,SR @ 107.9'	
										109.0				109		470			
														110		469		highly fractured @ 109.9-110.1'	
																		110.4	
							HQ	17	5.0	5.0	2.8	100	56					DOLOMITE; light brownish gray; micritic; fresh to slightly weathered; very strong; hard; w/vuggy zones & widely spaced stylolites; (Bass Islands Group).	
														111		468		90°,J,Cl,Pa,WA,SR @ 111.7-111.8'	
														112		467		highly fractured @ 112.0-112.2'	
																		60°,J,No,No,St,SR @ 112.4-112.9'	
																		60°,J,No,No,Pl,SR @ 112.7-113.1'	Core box #6 starts @ 112.7'.
														113		466		20°,J,No,No,Pl,SR @ 113.2'	
										114.0				114		465		70°,J,Cl,Pa,Pl,S @ 113.9-114.1'	HQ-18: core fell out of core barrel into hole; ultimately recovered core.
														115		464		115.1	
																		DOLOMITE; argillaceous; dark gray; very fine to fine grained; fresh; strong; moderately hard; (Bass Islands Group).	
														116		463		0°,B,Cl,Pa,Pl,SR @ 115.4-115.8'	
							HQ	18	5.0	5.0	3.7	100	74					116.1	
																		DOLOMITE; grayish brown; vuggy; very fine to fine grained; slightly weathered; strong; moderately hard; w/closely to very closely spaced stylolites; (Bass Islands Group).	
														117		462		80°,J,Cl,Pa,Pl,SR @ 117.7-117.8'	
														118		461		0°,B,No,No,Pl,SR @ 118.1'	
																		20°,J,Ca,Pa,Pl,SR @ 118.3-118.4'	
										119.0				119		460		50°,J,Cl,Pa,Pl,SR @ 119.0-119.1'	
																		119.6	
														120				DOLOMITE & DOLOMITE; argillaceous; greenish	

BLACK & VEATCH

BORING LOG

BORING NO. RB-C1

CLIENT	PROJECT	PROJECT NO.
Detroit Edison	Fermi 3 COL Application	147483

PROJECT LOCATION	COORDINATES	GROUND ELEVATION (DATUM)	TOTAL DEPTH
Monroe, MI	N 6273.2' E 4445.3'	579.2 ft (NAVD 88)	271.0 (feet)

SURFACE CONDITIONS	COORDINATE SYSTEM	DATE START	DATE FINISHED
Gravel Parking Lot	Plant	06/14/07	07/26/07

LOGGED BY	CHECKED BY	APPROVED BY
Grainger/Mass	Dogbey/Mass	Meyer

SAMPLING: SAMPLE TYPE	SAMPLE NUMBER	SET 6 INCHES	2ND 6 INCHES	3RD 6 INCHES	N VALUE	SAMPLE RECOVERY	CORING: CORE SIZE	RUN NUMBER	RUN LENGTH	RUN RECOVERY	RQD RECOVERY	PERCENT RECOVERY	RQD	DEPTH (FEET)	SAMPLE TYPE	ELEVATION (FEET)	GRAPHIC LOG	CLASSIFICATION OF MATERIALS	REMARKS
							HQ	19	5.0	3.7	2.2	74	44	120		459		gray (argillaceous dolomite) mottled w/grayish brown (dolomite); very fine grained; fresh to slightly weathered; strong; very hard; vugs in dolomite; (Bass Islands Group), 60°,J,Cl,Pa,Pl,SR @ 119.8-119.9' joints filled w/large (0.4-0.8") anhydrite crystals @ 121.3-121.4' 30°,J,anhydrite,Fi,Pl,SR @ 121.3-121.4' 140°,J,anhydrite,Fi,Pl,SR @ 121.3-121.4'	
														121		458			
														122		457			
														123		456			
										124.0				124		455			Core loss @ 124.0-125.4'.
														125		454		highly fractured @ 125.4-126.1'	
							HQ	20	5.0	3.6	0.0	72	0	126		453		126.1 DOLOMITE & SHALE; dolomitic; dark gray to very dark gray w/bands of grayish brown; micritic to very fine grained; fresh; moderately strong; moderately hard; (Salina Group - Unit F). highly fractured @ 126.4-126.9' 90°,J,Cl,Pa,Pl,SR @ 127.4-127.6' claystone band; dolomitic; brecciated; very dark gray; highly weathered; very weak; low hardness; w/angular fragments of dolomite @ 127.8-128.0' 70°,J,Ca,Fi,Pl,SR @ 128.5-128.6' 90°,J,No,No,Pl,SR @ 128.6-129.0'	
														127		452			
														128		451			
										129.0				129		450			Core box #7 starts @ 129.0'.
														130		449			
														131		448		mottled w/anhydrite beds @ 130.8-131.0'	
							HQ	21	5.0	4.0	1.4	80	28					highly fractured @ 131.3-131.6'	
														132		447		70°,J,anhydrite,Pa,Pl,SR @ 132.1-132.3' mottled w/anhydrite beds, anhydrite crystals fill part of 70° joint @ 132.2-132.5'	
														133		446		dolomite band; light gray; vuggy; micritic; slightly weathered; strong; very hard @ 132.5-132.6' limestone; black; vuggy; very fine grained; slightly weathered; strong; hard @ 132.7-133.1'	
										134.0				134		445		133.1 SHALE; dolomitic; gray; platy; very fine grained; fresh; strong; hard; (Salina Group - Unit F). 134.2	Core loss throughout @ 134.2-138.2'.
														135					

BLACK & VEATCH

BORING LOG

BORING NO. RB-C1

CLIENT	PROJECT	PROJECT NO.
Detroit Edison	Fermi 3 COL Application	147483

PROJECT LOCATION	COORDINATES	GROUND ELEVATION (DATUM)	TOTAL DEPTH
Monroe, MI	N 6273.2' E 4445.3'	579.2 ft (NAVD 88)	271.0 (feet)

SURFACE CONDITIONS	COORDINATE SYSTEM	DATE START	DATE FINISHED
Gravel Parking Lot	Plant	06/14/07	07/26/07

LOGGED BY	CHECKED BY	APPROVED BY
Grainger/Mass	Dogbey/Mass	Meyer

SAMPLING: SAMPLE TYPE	SAMPLE NUMBER	SET 6 INCHES	2ND 6 INCHES	3RD 6 INCHES	N VALUE	SAMPLE RECOVERY

CORING: CORE SIZE	RUN NUMBER	RUN LENGTH	RUN RECOVERY	RQD RECOVERY	PERCENT RECOVERY	RQD
HQ	22	5.0	1.8	0.0	36	0
HQ	23	2.5	2.4	0.5	96	20
HQ	24	2.5	1.5	0.4	60	16
HQ	25	2.5	2.0	0.4	80	16
HQ	26	2.5	2.0	0.0	80	0

DEPTH (FEET)	ELEVATION (FEET)	CLASSIFICATION OF MATERIALS	REMARKS
135	444	LIMESTONE; vuggy; very dark grayish brown; very fine grained; slightly to moderately weathered; strong; moderately hard; highly fractured; (Salina Group - Unit F).	
136	443		
137	442		
138	441	138.2	
		CLAYSTONE; dolomitic; dark gray; highly weathered; weak; low hardness; (Salina Group - Unit F).	
139	440	139.0 gray; slightly weathered; strong; moderately hard @ 139.0 -139.8'	PP = 2.3 TSF TV = 1.7 TSF @ 139.8'.
		80°,J,Cl,Fi,Pl,SR @ 139.2-139.4'	
140	439	very weak @ 139.8-140.5'	
		slightly weathered; strong; moderately hard @ 140.5-141.4'	
141	438	40°,J,Cl,Fi,Pl,SR @ 140.7-140.8',140.9-141.1'	
		141.5	Core loss @ 141.4-141.5'.
142	437	gray; very weak; friable @ 142.5-142.9'	Discrete sample 7-A collected @ 142.5-142.9'.
143	436	slightly to moderately weathered; moderately strong; moderately hard @ 142.9-143.5'	
		90°,J,Cl,Fi,Pl,SR @ 143.0-143.2', 143.3-143.4'	
		w/weaker claystone @ 143.3-143.4'	
144	435	grades very dark gray @ 143.5'	
		144.0	Core loss @ 144.0-144.5'.
		DOLOMITE; argillaceous; dark gray; micritic; fresh; strong; moderately hard; (Salina Group - Unit F).	
145	434	90°,J,No,No,Pl,SR @ 145.1-145.6'	
146	433	146.3	
		CLAYSTONE; dolomitic; gray; micritic; moderately weathered; weak; low hardness; slight hydrocarbon odor; w/highly fractured, argillaceous dolomite partings; (Salina Group - Unit F).	
147	432	146.5 strong hydrocarbon odor @ 147.0-148.0'	Discrete sample 7-B collected @ 147.0-149.0' for chemical analysis.
148	431	148.0	
		DOLOMITE; argillaceous; gray; micritic; fresh; strong; moderately hard; (Salina Group - Unit F).	
149	430	148.5	
		CLAYSTONE; dolomitic; gray; moderately weathered; weak; low hardness; slight hydrocarbon odor; w/highly fractured, argillaceous dolomite partings; (Salina Group - Unit F).	Core box #8 starts @ 149.0'. Water level @
		149.0	
150			

BLACK & VEATCH

BORING LOG

BORING NO. RB-C1

CLIENT	PROJECT	PROJECT NO.
Detroit Edison	Fermi 3 COL Application	147483

PROJECT LOCATION	COORDINATES	GROUND ELEVATION (DATUM)	TOTAL DEPTH
Monroe, MI	N 6273.2' E 4445.3'	579.2 ft (NAVD 88)	271.0 (feet)

SURFACE CONDITIONS	COORDINATE SYSTEM	DATE START	DATE FINISHED
Gravel Parking Lot	Plant	06/14/07	07/26/07

LOGGED BY	CHECKED BY	APPROVED BY
Grainger/Mass	Dogbey/Mass	Meyer

SAMPLING								CORING									
SAMPLE TYPE	SAMPLE NUMBER	SET 6 INCHES	2ND 6 INCHES	3RD 6 INCHES	N VALUE	SAMPLE RECOVERY		CORE SIZE	RUN NUMBER	RUN LENGTH	RUN RECOVERY	RQD RECOVERY	PERCENT RECOVERY	RQD	DEPTH (FEET)	ELEVATION (FEET)	GRAPHIC LOG	CLASSIFICATION OF MATERIALS	REMARKS
								HQ	27	2.5	2.5	0.0	100	0	150	429		highly weathered; very weak to extremely weak; low hardness to friable @ 149.0-151.0'	18.1' prior to drilling on 07/16/07. Hole @ 149.0'.
															151	428		moderately strong; moderately hard @ 151.0-151.5'	
											151.5								Core loss @ 151.5-152.0'.
								HQ	28	2.5	2.0	1.2	80	48	152	427		highly weathered; very weak @ 152.0-152.8'	
															153	426		light greenish gray; slightly to moderately weathered; moderately strong; moderately hard @ 152.8-154.0'	Discrete sample 8-A collected @ 152.8-153.4'. Drill chatter @ 153.5-154.0'.
											154.0				154	425			Core loss @ 154.0-156.5'.
								HQ	29	5.0	2.5	0.0	50	0	155	424			
															156	423			
															157	422		grades moderately to highly weathered; weak to very weak; hydrocarbon odor @ 156.5'	
															158	421			
											159.0				159	420		CLAYSTONE; dolomitic; gray; moderately to highly weathered; weak; low hardness; strong hydrocarbon odor; w/highly fractured, sand- & gravel-sized fragments of dolomite partings; (Salina Group - Unit F).	
								HQ	30	2.5	2.5	0.4	100	16	160	419			Discrete sample 8-B collected @ 159.8-160.6' for chemical analysis.
															161	418			
											161.5				162	417		grades very dark gray @ 161.5'	
								HQ	31	2.5	2.0	1.2	80	48	163	416		CLAYSTONE; dolomitic; gray; slightly to moderately weathered; moderately strong; moderately hard; hydrocarbon odor; w/highly fractured, sand- and gravel-sized fragments of dolomite partings; (Salina Group - Unit F).	Discrete sample 8-C collected @ 162.8-164.0'.
											164.0				164	415			
															165				

159.0

162.8

7/21/2008 5:28 PM DTE - Fermi 3 Geotech

BLACK & VEATCH

BORING LOG

BORING NO. RB-C1

CLIENT	PROJECT	PROJECT NO.
Detroit Edison	Fermi 3 COL Application	147483

PROJECT LOCATION	COORDINATES	GROUND ELEVATION (DATUM)	TOTAL DEPTH
Monroe, MI	N 6273.2' E 4445.3'	579.2 ft (NAVD 88)	271.0 (feet)

SURFACE CONDITIONS	COORDINATE SYSTEM	DATE START	DATE FINISHED
Gravel Parking Lot	Plant	06/14/07	07/26/07

LOGGED BY	CHECKED BY	APPROVED BY
Grainger/Mass	Dogbey/Mass	Meyer

SAMPLING							CORING									
SAMPLE TYPE	SAMPLE NUMBER	SET 6 INCHES	2ND 6 INCHES	3RD 6 INCHES	N VALUE	SAMPLE RECOVERY	CORE SIZE	RUN NUMBER	RUN LENGTH	RUN RECOVERY	RQD RECOVERY	PERCENT RECOVERY	RQD	DEPTH (FEET)	SAMPLE TYPE	ELEVATION (FEET)	GRAPHIC LOG	CLASSIFICATION OF MATERIALS	REMARKS
							HQ	32	2.5	2.3	0.0	92	0	165		414		dolomite band; argillaceous; gray; very fine grained (crystalline); fresh; strong; hard @ 166.3-166.5' 40°,J,Cl,Pa,Pl,SR @ 166.3-166.4', 166.4-166.5' 90°,J,Cl,Pa,Pl,SR @ 166.3-166.5'	Discrete sample 8-D collected @ 166.5-167.5' for chemical analysis.
							HQ	33	1.2	166.5 1.2	0.0	100	0	166		413			
							HQ	34	1.3	167.7 0.1	0.0	8	0	167		412			Core box #9 starts @ 167.7'. Core barrel jammed @ 167.7'.
							HQ	35	2.5	169.0 1.8	0.0	72	0	168		411			
							HQ	36	2.5	171.5 1.8	0.0	72	0	169		410		169.4 BRECCIA - dolomite clasts in a poorly indurated claystone matrix: claystone matrix; highly weathered; very weak; friable; w/angular clasts of dolomite; argillaceous; (Salina Group - Unit F).	Drill chatter @ about 170.0'.
							HQ	37	2.5	174.0 2.2	0.0	88	0	170		409			
							HQ	38	2.5	176.5 1.4	0.0	56	0	171		408			
										179.0				172		407			Drill chatter @ about 173.5'.
														173		406			
														174		405		shale parting; black; platy; very fine grained; fresh; moderately strong; moderately hard @ 175.2'	
														175		404			
														176		403		176.0 DOLOMITE; argillaceous; gray; very fine to fine grained (crystalline); fresh; strong; hard; (Salina Group - Unit F). 125°,J,Cl,Fi,Pl,SR @ 176.0-176.5' 110°,J,Cl,Pa,Pl,SR @ 176.4-176.5' 60°,J,Cl,Pa,Pl,SR @ 176.4-176.5'	
														177		402		176.5 CLAYSTONE; dolomitic; gray; slightly to moderately weathered; moderately strong; moderately hard; hydrocarbon odor; w/highly fractured, sand- and gravel-sized fragments of dolomite partings; (Salina Group - Unit F). slight hydrocarbon odor @ about 176.9'	
														178		401			
														179		400			Water level @ 18.2' prior to drilling on
														180				dolomite bands; argillaceous; gray; micritic to very	

BLACK & VEATCH

BORING LOG

BORING NO. RB-C1

CLIENT	PROJECT	PROJECT NO.
Detroit Edison	Fermi 3 COL Application	147483

PROJECT LOCATION	COORDINATES	GROUND ELEVATION (DATUM)	TOTAL DEPTH
Monroe, MI	N 6273.2' E 4445.3'	579.2 ft (NAVD 88)	271.0 (feet)

SURFACE CONDITIONS	COORDINATE SYSTEM	DATE START	DATE FINISHED
Gravel Parking Lot	Plant	06/14/07	07/26/07

LOGGED BY Grainger/Mass (Geofor TB for) | CHECKED BY Dogbey/Mass (EM for TB for) | APPROVED BY Meyer (EM)

SAMPLING: SAMPLE TYPE	SAMPLE NUMBER	SET 6 INCHES	2ND 6 INCHES	3RD 6 INCHES	N VALUE	SAMPLE RECOVERY	CORING: CORE SIZE	RUN NUMBER	RUN LENGTH	RUN RECOVERY	RQD RECOVERY	PERCENT RECOVERY	RQD	DEPTH (FEET)	SAMPLE TYPE	ELEVATION (FEET)	GRAPHIC LOG	CLASSIFICATION OF MATERIALS	REMARKS
							HQ	39	2.0	0.8	0.0	40	0	180		399		fine grained; slightly weathered; strong; moderately hard to hard @ about 179.8-180.4'	07/17/07. Hole @ 178.8'.
																		grades brecciated (healed) @ 180.4'	Core loss throughout @ 179.0-181.0'.
							HQ	40	2.5	181.0 2.4	0.7	96	28	181		398			
														182		397		40°,J,Cl,Fi,Pl,SR @ 182.4-182.6'	
																		182.5	
														183		396		CLAYSTONE; dolomitic; very dark gray to gray; slightly weathered; moderately strong; moderately hard; (Salina Group - Unit F).	Discrete sample 9-A collected @ 182.8-183.5'.
							HQ	41	2.5	183.5 1.0	0.0	40	0	184		395			Core loss throughout @ 183.5-186.0'.
																		184.3	
														185		394		BRECCIA - dolomite clasts in a poorly indurated claystone matrix: claystone matrix; dolomitic; dark bluish gray; moderately weathered; moderately strong; moderately hard w/angular clasts of dolomite; light brownish gray; micritic; fresh to slightly weathered; moderately strong; moderately hard; some vuggy clasts; (Salina Group - Unit F).	
							HQ	42	2.5	186.0 1.7	0.4	68	16	186		393		dolomite parting; light brownish gray; micritic; slightly weathered; moderately strong; moderately hard @ 184.8'	
														187		392		light gray; highly weathered; very weak; low hardness @ 186.8-187.2'	
														188		391		highly fractured zone; consists of angular fragments of dolomite (as described @ 184.3') and calcite; white; micritic; fresh; strong; hard @ 187.2-188.1'	
							HQ	43	2.5	188.5 0.7	0.0	28	0	189		390			Core loss @ 188.5-190.3'.
														190		389		dark gray; highly weathered; weak; low hardness @ 190.3-190.8'	
														191		388		very dark greenish gray; slightly weathered @ 190.8-191.0'	
							HQ	44	2.5	191.0 0.0	0.0	0	0	192		387			
														193		386			
							HQ	45	2.5	193.5 0.5	0.0	20	0	194		385			Water level @ 17.4' prior to drilling on 07/18/07.
														195				194.5 BRECCIA - dolomite clasts in a poorly indurated	

BLACK & VEATCH

BORING LOG

BORING NO. RB-C1

CLIENT	PROJECT	PROJECT NO.
Detroit Edison	Fermi 3 COL Application	147483

PROJECT LOCATION	COORDINATES	GROUND ELEVATION (DATUM)	TOTAL DEPTH
Monroe, MI	N 6273.2' E 4445.3'	579.2 ft (NAVD 88)	271.0 (feet)

SURFACE CONDITIONS	COORDINATE SYSTEM	DATE START	DATE FINISHED
Gravel Parking Lot	Plant	06/14/07	07/26/07

LOGGED BY	CHECKED BY	APPROVED BY
Grainger/Mass	Dogbey/Mass	Meyer

SAMPLING							CORING										
SAMPLE TYPE	SAMPLE NUMBER	SET 6 INCHES	2ND 6 INCHES	3RD 6 INCHES	N VALUE	SAMPLE RECOVERY	CORE SIZE	RUN NUMBER	RUN LENGTH	RUN RECOVERY	RQD RECOVERY	PERCENT RECOVERY	RQD	DEPTH (FEET)	SAMPLE TYPE	ELEVATION (FEET)	GRAPHIC LOG	CLASSIFICATION OF MATERIALS	REMARKS
														195		384		claystone matrix: claystone matrix; gray; highly weathered, weak to very weak; low hardness to friable; w/angular clasts of dolomite; greenish gray to dark gray; micritic to very fine grained; fresh; strong; hard; (Salina Group - Unit F).	
			196.0											196		383			Core box #10 starts @ 196.0'. Core loss @ 196.0-197.2'.
HQ	46	2.5	1.3	0.0	52	0								197		382		grades dark gray @ about 197.2'	
														198		381		90°,J,Ca,Fi,Pl,SR @ 198.3-198.5'	
			198.5											199		380		198.6 DOLOMITE; light gray; micritic; fresh; strong; hard; (Salina Group - Unit F).	
HQ	47	2.5	1.7	0.0	68	0								200		379		grades pale yellow @ 199.7' claystone band; white; very fine grained; highly weathered; very weak; low hardness @ 200.1-200.3' 20°,J,Cl,Fi,Pl,SR @ 200.3'	Core loss between 199.5-199.9' and 200.5-200.9'.
			201.0											201		378		200.4 LIMESTONE; dark olive brown & light brownish gray; pitted/vuggy; very fine to fine grained; slightly to moderately weathered; strong; moderately hard; pits/vugs 0.02-0.4"; trace vugs filled w/anhydrite; (Salina Group - Unit F).	Core loss throughout @ 201.0-205.0'.
HQ	48	2.5	0.7	0.0	28	0								202		377			
														203		376		highly fractured (consists of angular fragments of vuggy limestone and argillaceous dolomite) @ 201.0-203.5'	
			203.5											204		375			
HQ	49	2.5	0.9	0.0	36	0								205		374		205.0 BRECCIA - dolomite clasts in a poorly indurated claystone matrix: claystone matrix; dolomitic; very dark gray; slightly weathered; moderately strong; moderately hard; w/angular clasts of dolomite; light gray; micritic; slightly weathered; strong; moderately hard; (Salina Group - Unit F).	
			206.0											206		373			Water level @ 17.3' prior to drilling on 07/19/07. Hole @ 206.0'. Core loss @ 206.0-207.2'.
HQ	50	2.5	1.3	0.0	52	0								207		372		gray; highly weathered; weak to very weak; low hardness; fewer fragments of dolomite @ 207.2-208.0'	
														208		371			
			208.5											209		370		w/limestone bands; dark gray; pitted; micritic; slightly weathered; strong; hard; some pits filled w/dolomite @ 208.0-208.5'	
HQ	51	2.5	0.0	0.0	0	0								210					

BLACK & VEATCH

BORING LOG

BORING NO. RB-C1

CLIENT	PROJECT	PROJECT NO.
Detroit Edison	Fermi 3 COL Application	147483

PROJECT LOCATION	COORDINATES	GROUND ELEVATION (DATUM)	TOTAL DEPTH
Monroe, MI	N 6273.2' E 4445.3'	579.2 ft (NAVD 88)	271.0 (feet)

SURFACE CONDITIONS	COORDINATE SYSTEM	DATE START	DATE FINISHED
Gravel Parking Lot	Plant	06/14/07	07/26/07

LOGGED BY	CHECKED BY	APPROVED BY
Grainger/Mass	Dogbey/Mass	Meyer

SAMPLING							CORING									
SAMPLE TYPE	SAMPLE NUMBER	SET 6 INCHES	2ND 6 INCHES	3RD 6 INCHES	N VALUE	SAMPLE RECOVERY	CORE SIZE	RUN NUMBER	RUN LENGTH	RUN RECOVERY	RQD RECOVERY	PERCENT RECOVERY	RQD	DEPTH (FEET)	SAMPLE TYPE	ELEVATION (FEET)	GRAPHIC LOG	CLASSIFICATION OF MATERIALS	REMARKS
														210		369			
														211		368		highly fractured @ 211.2-211.6'	Core loss @ 211.0-211.2'.
							HQ	52	2.5	2.3	0.0	92	0	212		367		claystone band; gray; highly weathered; weak; low hardness @ 211.5-211.6'	
																		211.6	
														213		366		LIMESTONE; olive gray & very dark gray; vuggy; micritic; slightly to moderately weathered; strong; very hard; (Salina Group - Unit F).	
																		212.4	
																		DOLOMITE; argillaceous; light brownish gray; micritic; fresh; strong; hard; w/fossils (ostracodes); (Salina Group - Unit F).	Core loss @ 213.5-213.9'.
							HQ	53	2.5	2.1	0.0	24	0	214		365		90°,J,Cl,Pa,Pl,SR @ 213.0-213.4'	
																		claystone parting; white; highly weathered; very weak; low hardness to friable @ 213.0'	
														215		364		40°,J,Cl,Pa,Pl,SR @ 213.4-213.6', 213.6-213.7'	
																		170°,J,Cl,Pa,Pl,SR @ 213.5'	
																		30°,J,Cl,Pa,Pl,SR @ 213.5'	
																		claystone lens w/fragments of dolomite @ 214.3-214.5', 214.7-214.9'	
														216		363		70°,J,Cl,Pa,Pl,S @ 214.5-214.7'	Core loss @ 216.0-217.1'.
																		120°,J,Cl,Pa,Pl,S @ 214.5-214.6'	
														217		362		highly fractured @ 215.2-215.4'	
																		50°,J,No,No,Pl,R @ 215.6-215.8'	
																		217.3	
														218		361		CLAYSTONE; dolomitic; gray; highly weathered; very weak; low hardness; strong hydrocarbon odor; properties comparable to low plasticity, low toughness, slow dilatancy soil fines; (Salina Group - Unit F).	
							HQ	54	5.0	3.5	0.4	70	8	219		360		shale band; dark greenish gray; fissile; very fine grained; fresh; moderately strong; hard; strong hydrocarbon odor @ 218.1-218.3'	
																		85°,J,No,No,Pl,R @ 218.6-218.9'	Core box #11 starts @ 219.6'.
														220		359		219.2	
																		DOLOMITE; grayish brown; micritic; fresh; strong; hard; (Salina Group - Unit F).	
																		50°,J,Cl,Pa,Pl,SR @ 220.0-220.1'	
														221		358		220.4	
																		LIMESTONE; dark greenish gray; pitted/vuggy; micritic; slightly to moderately weathered; strong; hard; pits/vugs 0.02-0.6"; (Salina Group - Unit F).	Core loss @ 221.0-223.0'.
														222		357			
														223		356		highly fractured w/limestone & dolomite fragments @ 223.0-223.4'	
							HQ	55	5.0	3.0	1.4	60	28					90°,J,Cl,Fi,Pl,SR @ 223.5-223.9'	
														224		355		223.9	
																		DOLOMITE; argillaceous; light gray & light brownish gray, banded; micritic; fresh; very strong; very hard; (Salina Group - Unit F).	
														225					

BLACK & VEATCH

BORING LOG

BORING NO. RB-C1

CLIENT	PROJECT	PROJECT NO.
Detroit Edison	Fermi 3 COL Application	147483

PROJECT LOCATION	COORDINATES	GROUND ELEVATION (DATUM)	TOTAL DEPTH
Monroe, MI	N 6273.2' E 4445.3'	579.2 ft (NAVD 88)	271.0 (feet)

SURFACE CONDITIONS	COORDINATE SYSTEM	DATE START	DATE FINISHED
Gravel Parking Lot	Plant	06/14/07	07/26/07

LOGGED BY	CHECKED BY	APPROVED BY
Grainger/Mass	Dogbey/Mass	Meyer

SAMPLING							CORING										
SAMPLE TYPE	SAMPLE NUMBER	SET 6 INCHES	2ND 6 INCHES	3RD 6 INCHES	N VALUE	SAMPLE RECOVERY	CORE SIZE	RUN NUMBER	RUN LENGTH	RUN RECOVERY	RQD RECOVERY	PERCENT RECOVERY	RQD	DEPTH (FEET)	SAMPLE TYPE	ELEVATION (FEET)	GRAPHIC LOG	CLASSIFICATION OF MATERIALS	REMARKS
														225		354		90°,J,Cl/Ca,Pa,Pl,SR @ 223.9-224.4' 135°,J,Ca,Pa,Pl,SR @ 224.3-224.4'	
																		224.5	
																		LIMESTONE; dark greenish gray; pitted/vuggy; micritic; slightly to moderately weathered; strong; hard; pits/vugs 0.02-0.6"; (Salina Group - Unit F).	
							HQ	56	0.5	226.0 0.5	0.0	100	0	226		353		highly fractured @ 224.5-224.7'	Water level @ 24.5' prior to drilling on 07/24/07.
										226.5								30°,J,Ca,Pa,Pl,SR @ 224.7'	
							HQ	57	1.5	1.1	0.5	73	33	227		352		20°,J,Ca,Pa,Pl,SR @ 225.5'	Core barrel jammed @ 226.5'.
																		80°,J,Ca,Fi,Pl,SR @ 225.7-226.0'	
																		226.0	
										228.0				228		351		DOLOMITE; grayish brown; very fine grained (crystalline); fresh; strong; hard; (Salina Group - Unit F).	HQ-57 drilled very slowly. Core loss @ 226.5-226.9'.
							HQ	58	2.2	1.8	0.0	82	0					20°,J,Ca,Pa,Pl,SR @ 226.3-226.4'	
																		80°,J,Ca,Pa,Pl,SR @ 226.3-226.5'	
														229		350		highly fractured; some vertical fractures filled w/calcite @ 226.9-227.5'	
																		227.5	
														230		349		DOLOMITE; argillaceous; light gray; micritic; fresh; strong; hard to very hard; w/zones of very closely spaced (about 2.4" apart) stylolites; (Salina Group - Unit F).	
										230.2								110°,J,Ca,Pa,Pl,SR @ 227.5-227.6'	
							HQ	59	0.8	0.8	0.0	100	0					75°,J,T,WA, @ 227.6-228.0'	
														231		348		grades very dark greenish gray; hard; highly fractured; w/trace limestone fragments @ 228.0'	Core loss @ 231.0-233.7'.
																		230.2	
										231.0				232		347		DOLOMITE; argillaceous; grayish brown; micritic; fresh; strong; very hard; (Salina Group - Unit F).	
														233		346			
							HQ	60	5.0	2.3	0.0	46	0						
														234		345		grades grayish brown to greenish gray @ 233.7'	
																		20°,J,Ca,Fi,Pl,SR @ 233.8'	
																		50°,J,No,No,Pl,S @ 234.0-234.2'	
																		234.3	
														235		344		DOLOMITE & BRECCIA; DOLOMITE: argillaceous; greenish gray to grayish brown; micritic; fresh; strong; very hard; BRECCIA - dolomite clasts in a well indurated claystone matrix: healed; claystone matrix; dolomitic; dark gray; slightly weathered; strong; moderately hard; angular sand- & gravel-sized clasts of dolomite; rock types separated by approximately 90° joints; (Salina Group - Unit F).	
														236		343			PID = 1.2ppm
							HQ	61	1.0	236.0 1.0	0.0	100	0					60°,J,No,No,Pl,S @ 234.3-234.4'	
																		150°,J,No,No,Pl,SR @ 234.3'	
										237.0				237		342		90°,J,T,Cl,Pa,WA,S @ 234.8-236.0'	Core barrel jammed @ 237.0'.
																		highly fractured @ 235.1-236.0'	
														238		341		90°,J,Cl,Pa,Pl,S @ 235.4-235.6'	
																		236.0	
																		CLAYSTONE; dolomitic; gray; highly weathered; very weak to extremely weak; low hardness to friable; hydrocarbon odor; properties comparable to high plasticity, low toughness, slow to rapid dilatancy soil fines; w/highly fractured dolomite partings; (Salina Group - Unit F).	Core loss throughout @ 237.0-241.8'.
							HQ	62	4.0	1.0	0.0	25	0	239		340			
														240					

BLACK & VEATCH

BORING LOG

BORING NO. RB-C1

CLIENT	PROJECT	PROJECT NO.
Detroit Edison	Fermi 3 COL Application	147483

PROJECT LOCATION	COORDINATES	GROUND ELEVATION (DATUM)	TOTAL DEPTH
Monroe, MI	N 6273.2' E 4445.3'	579.2 ft (NAVD 88)	271.0 (feet)

SURFACE CONDITIONS	COORDINATE SYSTEM	DATE START	DATE FINISHED
Gravel Parking Lot	Plant	06/14/07	07/26/07

LOGGED BY	CHECKED BY	APPROVED BY
Grainger/Mass	Dogbey/Mass	Meyer

SAMPLING: SAMPLE TYPE	SAMPLE NUMBER	SET 6 INCHES	2ND 6 INCHES	3RD 6 INCHES	N VALUE	SAMPLE RECOVERY

CORING: CORE SIZE	RUN NUMBER	RUN LENGTH	RUN RECOVERY	RQD RECOVERY	PERCENT RECOVERY	RQD
HQ	63	5.0	4.1	1.5	82	30
HQ	64	5.0	4.0	3.0	80	60
HQ	65	5.0	5.0	4.3	100	86

DEPTH (FEET)	SAMPLE TYPE	ELEVATION (FEET)	GRAPHIC LOG	CLASSIFICATION OF MATERIALS	REMARKS
240		339		238.5	
				DOLOMITE; argillaceous; bluish gray; micritic; fresh; strong; hard; (Salina Group - Unit E). grades gray; very hard @ 239.0'	
241		338		241.0	
242		337		grades light brownish gray; w/dark gray shale partings @ 241.8'	
243		336		0°,B,Cl,Fi,Pl,S @ 242.6', 243.0' 60°,J,No,No,Pl,SR @ 242.8' 30°,J,No,No,Pl,SR @ 243.2-243.3' 140°,J,No,No,Pl,SR @ 243.2-243.3'	Core box #12 starts @ 242.8'. Core loss @ 243.3-243.4'.
244		335		243.4 DOLOMITE; light brownish gray; pitted; micritic; fresh; very strong; very hard; w/fossils (ostracodes) dissolved to form pits; (Salina Group - Unit E). 40°,J,No,No,Pl,SR @ 243.5-243.6' dense fossil beds @ 243.7', 244.2-244.5', 245.2-245.4', 246.6', 246.8' argillaceous @ 243.8-244.0', 244.7-244.8' 90°,J,No,No,Pl,SR @ 244.0-244.3' 20°,J,No,No,Pl,SR @ 245.2' highly fractured @ 245.2-245.5'	
245		334			
246		333		246.0	
247		332		247.0 CLAYSTONE; dolomitic; pale yellow; highly weathered; very weak; low hardness to friable; hydrocarbon odor; properties comparable to low plasticity, low toughness, rapid dilatancy soil fines; (Salina Group - Unit E).	Core barrel blocked @ 247.0'
248		331		247.5 DOLOMITE; light brownish gray; pitted; micritic; fresh; very strong; very hard; w/fossils (ostracodes) dissolved to form pits; (Salina Group - Unit E). light gray @ 247.5-251.1' claystone band; dolomitic; white; highly weathered; very weak; friable; hydrocarbon odor; properties comparable to low plasticity, low toughness, slow dilatancy soil fines @ 248.6-248.8' stylolites begin @ 249.7' very closely spaced stylolites @ 250.5-250.6' highly fractured @ 250.7-250.9' 90°,J,N,chert,Pa,WA,SR @ 251.0-251.2' light gray @ 251.1-255.3' 0°,J,No,No,Pl,SR @ 251.2' 40°,J,No,No,Pl,SR @ 251.2-251.3' 20°,J,MW,anhydrite,Fi,Pl @ 251.5' 20°,J,T,Pl @ 252.5-252.6' 50°,J,T,Pl @ 253.1-253.5'	
249		330			
250		329			
251		328		251.0	
252		327			
253		326			
254		325			
255				20°,J,No,No,Pl,S @ 254.7'	

BLACK & VEATCH

BORING LOG

BORING NO. RB-C1

CLIENT	PROJECT	PROJECT NO.
Detroit Edison	Fermi 3 COL Application	147483

PROJECT LOCATION	COORDINATES	GROUND ELEVATION (DATUM)	TOTAL DEPTH
Monroe, MI	N 6273.2' E 4445.3'	579.2 ft (NAVD 88)	271.0 (feet)

SURFACE CONDITIONS	COORDINATE SYSTEM	DATE START	DATE FINISHED
Gravel Parking Lot	Plant	06/14/07	07/26/07

LOGGED BY	CHECKED BY	APPROVED BY
Grainger/Mass	Dogbey/Mass	Meyer

SAMPLING							CORING									
SAMPLE TYPE	SAMPLE NUMBER	SET 6 INCHES	2ND 6 INCHES	3RD 6 INCHES	N VALUE	SAMPLE RECOVERY	CORE SIZE	RUN NUMBER	RUN LENGTH	RUN RECOVERY	RQD RECOVERY	PERCENT RECOVERY	RQD	DEPTH (FEET)	SAMPLE TYPE	ELEVATION (FEET)	GRAPHIC LOG	CLASSIFICATION OF MATERIALS	REMARKS
														255		324		claystone band; dolomitic; light gray; slightly to moderately weathered; moderately strong; moderately hard @ 255.3-255.5'	
																		255.5	
										256.0				256		323		DOLOMITE; brown to grayish brown; micritic; fresh; very strong; very hard; w/white to light gray; fresh; moderately strong; moderately hard; convoluted gypsum partings, bands, & beds; thickest bed about 0.3' @ 256.0'; (Salina Group - Unit E).	Core box #13 starts @ 256.0'.
														257		322		0°,B,Gy,Fi,Ir,SR @ 256.0'	
HQ	66	5.0	5.0	4.0	100	80								258		321		claystone band; dolomitic; white; ighly weathered; very weak; low hardness; properties comparable to 75% low plasticity, low toughness, rapid dilatancy soil fines; 25% fine sand; moist @ 256.7-256.9'	
														259		320		257.3	
																		DOLOMITE; argillaceous; grayish brown & very dark gray, banded; micritic; fresh; very strong; very hard; w/shale partings & bands; (Salina Group - Unit E).	
														260		319		claystone band; dolomitic; gray; moderately weathered; weak; moderately hard; properties comparable to low plasticity, low toughness, no dilatancy soil fines; moist @ 259.8-260.0'	
																		260.0	
										261.0				261		318		DOLOMITE; argillaceous; greenish gray; micritic; fresh to slightly weathered; very strong; very hard; w/ white; micritic; fresh; moderately strong; moderately hard; gypsum partings; partings ~ 0.1"; thickest bed @ 263.1'; (Salina Group - Unit E).	
														262		317		0°,B,Cl,Fl,Pl,SR @ 261.4, 261.8'	
														263		316		0°,B,No,No,Pl,R @ 262.8'	
HQ	67	5.0	5.0	4.6	100	92												263.6	
														264		315		DOLOMITE; grayish brown; micritic to very fine grained (crystalline); fresh; very strong; hard; w/white; micritic; fresh; moderately strong; moderately hard; anhydrite lenses; convoluted boundaries; possibly soft sediment deformation; (Salina Group - Unit E).	
														265		314		264.7	
																		DOLOMITE; argillaceous; dark greenish gray w/thin partings of very dark grayish brown, banded; micritic; fresh; strong; very hard; w/few gypsum partings (about 0.1"); (Salina Group - Unit E).	
										266.0				266		313		20°,J,Cl,Pa,Pl,S @ 265.1', 265.2'	Core box #14 starts @ 266.0'. Water level @ 18.9' prior to drilling on 07/26/07. Hole @ 266.0'.
														267		312		grades gray @ 266.2'	
																		claystone band; dolomitic; gray; moderately weathered; weak; moderately hard; properties comparable to medium plasticity, low toughness, no dilatancy soil fines; moist @ 266.3-266.5'	
HQ	68	5.0	4.4	3.7	88	74								268		311		0°,B,Cl,Fi,Pl,S @ 266.7'	
														269		310		claystone band; dolomitic; white; highly weathered; very weak; low hardness; properties comparable to high plasticity, low toughness, slow dilatancy soil fines; moist @ 267.7-267.9'	
																		267.9	
														270				DOLOMITE; grayish brown to dark grayish brown;	

BLACK & VEATCH

BORING LOG

BORING NO. RB-C1

CLIENT	PROJECT	PROJECT NO.
Detroit Edison	Fermi 3 COL Application	147483

PROJECT LOCATION	COORDINATES	GROUND ELEVATION (DATUM)	TOTAL DEPTH
Monroe, MI	N 6273.2' E 4445.3'	579.2 ft (NAVD 88)	271.0 (feet)

SURFACE CONDITIONS	COORDINATE SYSTEM	DATE START	DATE FINISHED
Gravel Parking Lot	Plant	06/14/07	07/26/07

LOGGED BY	CHECKED BY	APPROVED BY
CCG for TBG Grainger/Mass	EMD for TBG Dogbey/Mass	EM Meyer

SAMPLING							CORING										
SAMPLE TYPE	SAMPLE NUMBER	SET 6 INCHES	2ND 6 INCHES	3RD 6 INCHES	N VALUE	SAMPLE RECOVERY	CORE SIZE	RUN NUMBER	RUN LENGTH	RUN RECOVERY	RQD RECOVERY	PERCENT RECOVERY	RQD	DEPTH (FEET)	SAMPLE TYPE	ELEVATION (FEET)	GRAPHIC LOG	CLASSIFICATION OF MATERIALS	REMARKS
														270		309		micritic; fresh; very strong; hard; w/convoluted gypsum partings & bands; thickness 0.1-1.2"; thickest bed @ 269.2'; (Salina Group - Unit E).	
														271		308		argillaceous; very hard @ 268.5-268.9' highly fractured @ 270.6-270.7'	Bottom of boring @ 271.0'. Water level @ 19.7' @ completion of drilling. Backfilled w/ bentonite chips to 39' bgs on 08/15/07. Continued w/ bentonite chips to 1' bgs then gravel to surface on 08/22/07.
														272		307			
														273		306			
														274		305			
														275		304			
														276		303			
														277		302			
														278		301			
														279		300			
														280		299			
														281		298			
														282		297			
														283		296			
														284		295			
														285					

7/21/2008 5:28 PM DTE - Fermi 3 Geotech

BLACK & VEATCH

BORING LOG

BORING NO. RB-C2

CLIENT	PROJECT	PROJECT NO.
Detroit Edison	Fermi 3 COL Application	147483

PROJECT LOCATION	COORDINATES	GROUND ELEVATION (DATUM)	TOTAL DEPTH
Monroe, MI	N 6273.2' E 4525.7'	579.3 ft (NAVD 88)	270.0 (feet)

SURFACE CONDITIONS	COORDINATE SYSTEM	DATE START	DATE FINISHED
Gravel parking area	Plant	06/14/07	07/30/07

LOGGED BY	CHECKED BY	APPROVED BY
Grainger/Bonnie TB	Dogbey/Bonnie TB	Meyer

SAMPLING: SAMPLE TYPE	SAMPLE NUMBER	SET 6 INCHES	2ND 6 INCHES	3RD 6 INCHES	N VALUE	SAMPLE RECOVERY	CORING: CORE SIZE	RUN NUMBER	RUN LENGTH	RUN RECOVERY	RQD RECOVERY	PERCENT RECOVERY	RQD	DEPTH (FEET)	SAMPLE TYPE	ELEVATION (FEET)	GRAPHIC LOG	CLASSIFICATION OF MATERIALS	REMARKS
														0		579		BOULDERS with Cobbles and Sand - About 50% angular; spherical to elongated; very hard boulders; about 20% angular, elongate to spherical, very hard cobbles; about 20% fine to coarse, angular hard sand; gray; loose; moist; strong reaction w/HCl; homogeneous; (Fill).	Boring advanced w/vacuum excavation. Vacuum refusal @ 1.5' on obstruction. Below 1.5' continued w/4" ID sonic continuous sampler w/ nominal 6" temporary steel casing advanced w/sampler. Discrete sample collected from S1.
S	1									1.0			1.0	1		578			
														2		577			
														3		576			
														4		575			
										5.0				5		574			
														6		573			
S	2												2.0	7		572			Discrete sample collected from S2.
														8		571			
														9		570			
										10.0				10		569			
																		10.5	
														11		568		Fat CLAY (CH) - About 95% high plasticity, high toughness, no dilatancy, high dry strength fines; about 5% fine to coarse, rounded, hard sand; dark gray & reddish brown; soft; moist; no reaction w/HCl; laminated; (Lacustrine Deposit).	
														12		567			
S	3												5.0	13		566			Discrete sample collected from S3.
														14		565			Set nominal 6" temporary steel casing to 14.0'.
														15					

BLACK & VEATCH

BORING LOG

BORING NO. RB-C2

CLIENT	PROJECT	PROJECT NO.
Detroit Edison	Fermi 3 COL Application	147483

PROJECT LOCATION	COORDINATES	GROUND ELEVATION (DATUM)	TOTAL DEPTH
Monroe, MI	N 6273.2' E 4525.7'	579.3 ft (NAVD 88)	270.0 (feet)

SURFACE CONDITIONS	COORDINATE SYSTEM	DATE START	DATE FINISHED
Gravel parking area	Plant	06/14/07	07/30/07

LOGGED BY	CHECKED BY	APPROVED BY
Granger/Bonnie TB	Dogbey/Bonnie TD	Meyer

SAMPLING							CORING									
SAMPLE TYPE	SAMPLE NUMBER	SET 6 INCHES	2ND 6 INCHES	3RD 6 INCHES	N VALUE	SAMPLE RECOVERY	CORE SIZE	RUN NUMBER	RUN LENGTH	RUN RECOVERY	RQD RECOVERY	PERCENT RECOVERY	RQD	DEPTH (FEET)	ELEVATION (FEET)	CLASSIFICATION OF MATERIALS	REMARKS
														15	564		
TW	4					1.4								16	563	Lean CLAY (CL) - About 88% LL=38,PL=18, slow dilatancy, high dry strength fines; about 12% fine to medium sand; dark grayish brown; firm to hard; moist; strong reaction w/HCl; homogeneous; (Glacial Till).	Below 15.0' continued w/ NWJ rods & 4½" tricone bit using bentonite mud as drilling fluid. SPT performed w/D-50 automatic hammer. PP = 4.0 TSF @ 17.0'.
														17	562		
														18	561		
														19	560		
														20	559	15.0	
SPT	5	6				NR								21	558	Lean CLAY with Sand (CL) - About 81% LL=25,PL=13, no dilatancy, high dry strength fines; about 18% fine to coarse, rounded to subrounded, hard sand; about 1% gravel; dark gray; hard; moist; homogeneous; (Glacial Till). 20.3	
														22	557		
														23	556	gravel layer @ 23.0' & 24.5'	
														24	555		
														25	554		
P	6					2.0								26	553		
														27	552	grades w/ cobbles	
														28	551		
														29	550		
			29.0											30			Tricone bit refusal @ 29.0' Below 29.0'

BLACK & VEATCH

BORING LOG

BORING NO. RB-C2

CLIENT	PROJECT	PROJECT NO.
Detroit Edison	Fermi 3 COL Application	147483

PROJECT LOCATION	COORDINATES	GROUND ELEVATION (DATUM)	TOTAL DEPTH
Monroe, MI	N 6273.2' E 4525.7'	579.3 ft (NAVD 88)	270.0 (feet)

SURFACE CONDITIONS	COORDINATE SYSTEM	DATE START	DATE FINISHED
Gravel parking area	Plant	06/14/07	07/30/07

LOGGED BY	CHECKED BY	APPROVED BY
Grainger/Bonnie TB	Dogbey/Bonnie TB	Meyer EM

SAMPLING: SAMPLE TYPE	SAMPLE NUMBER	SET 6 INCHES	2ND 6 INCHES	3RD 6 INCHES	N VALUE	SAMPLE RECOVERY	CORING: CORE SIZE	RUN NUMBER	RUN LENGTH	RUN RECOVERY	RQD RECOVERY	PERCENT RECOVERY	RQD	DEPTH (FEET)	SAMPLE TYPE	ELEVATION (FEET)	GRAPHIC LOG	CLASSIFICATION OF MATERIALS	REMARKS
S	7					5.0								30		549			continued w/4" ID sonic continuous sampler w/ nominal 6" temporary steel casing advanced w/sampler. Sonic core stored in box labeled S1.
														31		548		31.0 — DOLOMITE; crystalline; dark gray; micritic; fresh; very strong; very hard; (Bass Islands Group).	
														32		547			
														33		546			
										34.0				34		545			Set nominal 6" temporary steel casing to 33.8'. Below 34.0' continued w/ triple tube wire line core barrel w/diamond bit using water as drilling fluid. Water level @ 10.2' prior to drilling on 06/26/07. Water level @ 13.2' prior to drilling on 07/16/07. Core box #1 starts @ 34.0'.
HQ	1	1.0							1.0	0.0	0.0	0	0	35		544			
										35.0				36		543			
HQ	2	2.5							2.5	0.8	0.0	32	0	37		542			
										37.5				38		541		37.7 — DOLOMITE; crystalline; light brownish gray; micritic; fresh; very strong; hard; w/stylolites; (Bass Islands Group). 30°,J,T,No,No,Pl,R @ 38.5-38.6' 90°,J,VN,No,No,Pl,R @ 38.6-38.7' 0°,J,VN,No,No,Pl,R @ 38.6', 37.9'	
HQ	3	2.5							2.5	2.0	0.55	80	22	39		540			
										40.0				40		539		0°,J,VN,Cl,Pa,Pl,R @ 40.2', 40.7', 42.95' 90°,J,T,No,No,Pl,SR @ 40.0-40.2',40.7-41.2',42.1-42.9' 50°,J,T,No,No,Pl,SR @ 40.7-41.0',43.6-43.8',44.4-44.6' 0°,J,T,UK,Pa,Pl,SR @ 41.2',42.1' 60°,J,T,No,No,Pl,SR @ 41.5-42.1' grades brownish gray @ 41.8' 90°,J,T,No,No,Pl,SR @42.1-42.9' grades light brownish gray @ 42.2'	
														41		538			
HQ	4	5.0							5.0	5.0	1.6	100	32	42		537			
														43		536		0°,J,T,UK,Pa,Pl,SR @ 43.3' 50°,J,T,No,No,Pl,SR @ 43.6-43.8'	
														44		535		0°,J,T,UK,Pa,Pl,SR @ 44.4' 50°,J,T,No,No,Pl,SR @ 44.4-44.6'	
														45					

BLACK & VEATCH

BORING LOG

BORING NO. RB-C2

CLIENT	PROJECT	PROJECT NO.
Detroit Edison	Fermi 3 COL Application	147483

PROJECT LOCATION	COORDINATES	GROUND ELEVATION (DATUM)	TOTAL DEPTH
Monroe, MI	N 6273.2' E 4525.7'	579.3 ft (NAVD 88)	270.0 (feet)

SURFACE CONDITIONS	COORDINATE SYSTEM	DATE START	DATE FINISHED
Gravel parking area	Plant	06/14/07	07/30/07

LOGGED BY	CHECKED BY	APPROVED BY
Grainger/Bonnie TB	Dogbey/Bonnie TB	Meyer

SAMPLING							CORING									
SAMPLE TYPE	SAMPLE NUMBER	SET 6 INCHES	2ND 6 INCHES	3RD 6 INCHES	N VALUE	SAMPLE RECOVERY	CORE SIZE	RUN NUMBER	RUN LENGTH	RUN RECOVERY	RQD RECOVERY	PERCENT RECOVERY	RQD	DEPTH (FEET)	SAMPLE TYPE	ELEVATION (FEET)	GRAPHIC LOG	CLASSIFICATION OF MATERIALS	REMARKS
										45.0				45		534		highly fragmented @ 44.6-45.0'	Water level @ 7.6' prior to drilling on 07/17/07.
																		45.2 highly fractured @ 45.2-46.0'	
														46		533		DOLOMITE; gray & very dark gray (mottled); micritic; fresh; strong; hard; (Bass Islands Group). 45.7	
														47		532		DOLOMITE; gray; micritic; fresh; strong; hard; w/ fossils; (Bass Islands Group). 30°,J,VN,No,No,WA,R @ 46.1-46.2', 46.4-46.5' 10°,J,VN,No,No,PI,R @ 46.7' 80°,J,VN,UK,Pa,SR @ 47.2-47.6', 46.7-46.8' 47.7	
HQ	5	5.0	5.0	1.2	100	24								48		531		DOLOMITE; dark grayish brown; micritic; fresh; strong; hard; w/fossils; (Bass Islands Group). 0°,J,VN,No,No,PI,SR @ 48.1', 45.2'	
														49		530		0°,J,VN,Cl,Pa,PI,SR @ 49.0'	
										50.0				50		529			Core box #2 starts @ 50.0'.
														51		528		10°,J,T,No,No,PI,SR @ 50.7', 53.6' 0°,J,T,No,No,PI,SR @ 51.1',51.4',51.6',52.1',52.4'	
														52		527		52.6	
HQ	6	5.0	4.5	1.6	90	32								53		526		DOLOMITE; grayish brown; micritic; fresh; strong; hard; (Bass Islands Group). 0°,J,T,No,No,PI,SR @ 52.7' 53.1	
														54		525		DOLOMITE; light brownish gray; micritic; fresh; strong; hard; (Bass Islands Group). 90°,J,VN,No,No,PI,SR @ 53.2-53.6' 0°,J,T,No,No,PI,SR @ 53.2',54.7',54.35' grades to w/stylolites @ 53.7'	
										55.0				55		524		0°,J,T,No,No,PI,SR @ 55.3' fragmented @ 55.5-56.1'	
														56		523		70°,J,T,No,No,PI,SR @ 56.1-56.15',56.35-56.4' partially brecciated @ 56.5-57.0'	
														57		522			
HQ	7	5.0	5.0	2.6	100	52								58		521		57.9 DOLOMITE; gray; micritic; fresh; strong; hard; (Bass Islands Group). 0°,J,T,No,No,PI,SR @ 58.6', 58.9', 59.25'	
														59		520		59.0 SHALE; dolomitic; dark gray; platy; fresh; moderately strong; moderately hard; (Bass Islands Group). 59.3	
														60					

BLACK & VEATCH

BORING LOG

BORING NO. RB-C2

CLIENT	PROJECT	PROJECT NO.
Detroit Edison	Fermi 3 COL Application	147483

PROJECT LOCATION	COORDINATES	GROUND ELEVATION (DATUM)	TOTAL DEPTH
Monroe, MI	N 6273.2' E 4525.7'	579.3 ft (NAVD 88)	270.0 (feet)

SURFACE CONDITIONS	COORDINATE SYSTEM	DATE START	DATE FINISHED
Gravel parking area	Plant	06/14/07	07/30/07

LOGGED BY	CHECKED BY	APPROVED BY
Grainger/Bonnie TB	Dogbey/Bonnie TB	Meyer

SAMPLING: SAMPLE TYPE	SAMPLE NUMBER	SET 6 INCHES	2ND 6 INCHES	3RD 6 INCHES	N VALUE	SAMPLE RECOVERY

CORING: CORE SIZE	RUN NUMBER	RUN LENGTH	RUN RECOVERY	RQD RECOVERY	PERCENT RECOVERY	RQD
HQ	8	5.0	5.0	2.8	100	56
HQ	9	2.3	2.2	0.4	95	17
HQ	10	1.0	1.0	0.0	100	0
HQ	11	1.7	0.1	0.0	5	0
HQ	12	0.2	0.2	0.0	100	0
HQ	13	4.8	4.8	4.6	100	96

DEPTH (FEET)	ELEVATION (FEET)	GRAPHIC LOG	CLASSIFICATION OF MATERIALS	REMARKS
60	519		DOLOMITE; mottled light gray & very dark gray; (Bass Islands Group).	
			59.6	
61	518		DOLOMITE; oolitic; light brownish gray; micritic; fresh; strong; hard; (Bass Islands Group). 0°,J,T,No,No,Pl,SR @ 60.2',62.2'	
62	517		shale parting @ 62.05'	
			62.2	
63	516		BRECCIA; indurated; gray; coarse grained to micritic; fresh; strong; hard; dolomite clasts & matrix; (Bass Islands Group). 30°,J,VN,No,No,Pl,R @ 62.6-62.7' Claystone; soft @ 62.9-63.0' fragmented @ 63.0-63.2' shale parting (.1" thick) @ 63.3'	
64	515		63.3	
65	514		BRECCIA; indurated; light gray; micritic; very coarse grained; laminar bedding; fresh; strong; hard; dolomite clasts & matrix; (Bass Islands Group). 0°,J,T,No,No,Pl,SR @ 63.7',64.35',64.6',64.85' coarser grained @ 64.5-65.0'	Core box #3 starts @ 64.8'.
66	513		65.3 DOLOMITE; gray; micritic; fresh; strong; hard; (Bass Islands Group). 0°,J,VN,Ca,Pa,SR @ 65.4'	
67	512		0°,J,VN,Cl,Pa,SR @ 65.2',65.7',65.9',66.2',66.4',66.9' Claystone, soft @ 67.1-67.2' fragmented @ 67.3-67.5', 67.6-67.8' light brownish gray @ 67.4-67.5' shale partings @ 67.8-68.6' 90°,J,T,No,No,Ir,R @ 67.9-68.3'	Water level @ 18.7' prior to drilling on 07/26/07.
68	511			
69	510			
70	509		brecciated, healed (coarse grained to fine) @ 70.5-70.7' grades light brownish gray @ 70.5' 30°,J,VN,Cl,Pa,WA,SR @ 70.5-70.6' shale parting, wavy @ 70.5' 20°,J,VN,Cl,Pa,WA,SR @ 70.9-71.6' grades to w/stylolites @ 71.5' brecciated, healed (very coarse to fine grained) @ 71.9-72.4' 0°,J,T,No,No,Ir,R @ 72.0', 72.3'	
71	508			
72	507			
73	506			
74	505			
75			some anhydrite filled vugs @ 74.5-75.0'	

BLACK & VEATCH

BORING LOG

BORING NO. RB-C2

CLIENT	PROJECT	PROJECT NO.
Detroit Edison	Fermi 3 COL Application	147483

PROJECT LOCATION	COORDINATES	GROUND ELEVATION (DATUM)	TOTAL DEPTH
Monroe, MI	N 6273.2' E 4525.7'	579.3 ft (NAVD 88)	270.0 (feet)

SURFACE CONDITIONS	COORDINATE SYSTEM	DATE START	DATE FINISHED
Gravel parking area	Plant	06/14/07	07/30/07

LOGGED BY	CHECKED BY	APPROVED BY
Grainger/Bonnie TB	Dogbey/Bonnie TB	Meyer

SAMPLING							CORING									
SAMPLE TYPE	SAMPLE NUMBER	SET 6 INCHES	2ND 6 INCHES	3RD 6 INCHES	N VALUE	SAMPLE RECOVERY	CORE SIZE	RUN NUMBER	RUN LENGTH	RUN RECOVERY	RQD RECOVERY	PERCENT RECOVERY	RQD	DEPTH (FEET)	SAMPLE TYPE	ELEVATION (FEET)	GRAPHIC LOG	CLASSIFICATION OF MATERIALS	REMARKS
										75.0				75		504		30°,J,T,No,No,Pl,SR @ 75.3'	
														76		503		breccia, healed; coarse to fine grained; dolomite clasts & matrix @ 75.7-75.9',	
																		76.2	
																		BRECCIA; healed; coarse to fine grained; dolomite clasts & matrix; (Bass Islands Group)	
														77		502		30°,J,VN,UK,Pa,WA,SR @ 76.3'	
																		76.8	
							HQ	14	5.0	5.0	4.7	100	94					DOLOMITE; light brownish gray; micritic; fresh; strong; hard; w/stylolites (Bass Islands Group).	
														78		501		breccia, healed; coarse to fine grained; dolomite clasts & matrix @ 77.1-77.5'	
																		10°,J,VN,UK,Pa,Pl,SR @ 77.2'	
																		78.0	
														79		500		BRECCIA; healed; coarse to fine grained; dolomite clasts & matrix; (Bass Islands Group)	
																		78.5	
										80.0				80		499		DOLOMITE; light brownish gray; micritic; fresh; strong; hard; w/stylolites (Bass Islands Group).	Core box #4 starts @ 80.0'.
																		10°,J,VN,Cl,Pa,Pl,SR @ 79.2'	
														81		498		0°,J,T,Cl,Sp,Pl,SR @ 80.4'	
																		20°,J,T,Cl,Sp,Pl,SR @ 80.7', 80.9'	
																		15°,J,N,Cl,Fi,WA,SR @ 81.5'	
														82		497		0°,J,T,No,No,Pl,SR @ 81.9', 82.1', 83.0', 84.9'	
							HQ	15	5.0	5.0	2.4	100	48					siltstone band; white; micritic to very fine grained; highly weathered; very weak; friable; properties comparable to (ML), 100% low plasticity, low toughness, slow dilatancy, soil fines; firm; strong reaction w/HCl @ 82.7-82.9'	Discrete sample 4A taken from HQ15 @ 82.7-82.9'.
														83		496		fractured @ 82.9-83.1'	
																		60°,J,T,No,No,Pl,SR @ 83.5-83.6', 83.6-83.7'	
														84		495		90°,J,T,No,No,Pl,SR @ 83.5-83.6'	
																		0°,J,VN,Cl,Pa,WA,SR @ 83.9', 84.5'	
																		10°,J,N,No,No,Pl,R @ 84.1'	
										85.0				85		494		84.6	
																		DOLOMITE; light brownish gray; micritic; fresh; strong; hard; 5% vuggy; (Bass Islands Group).	
														86		493		10°,J,VN,Cl,Sp,Pl,SR @ 85.1', 87.6'	
																		grades no vugs @ 85.1'	
														87		492		dolomite; brecciated, healed; fine to medium grained @ 85.3-85.4', 89.3-89.4'	
																		85.5	
							HQ	16	5.0	5.0	2.5	100	50					SHALE; very dark gray; fresh; moderately strong; moderately hard; (Bass Islands Group).	
														88		491		85.8	
																		DOLOMITE; grayish brown; micritic; fresh; strong; hard; (Bass Islands Group).	
														89		490		0°,J,VN,No,No,WA,SR @ 86.1', 86.3', 86.5', 87.8', 88.0'	
																		fractured @ 86.3-86.8'	
																		90°,J,T,No,No,Pl,SR @ 86.3-86.8'	
														90				20°,J,VN,Cl,Sp,WA,SR @ 87.1'	

BLACK & VEATCH

BORING LOG

CLIENT	PROJECT	PROJECT NO.
Detroit Edison	Fermi 3 COL Application	147483

PROJECT LOCATION	COORDINATES	GROUND ELEVATION (DATUM)	TOTAL DEPTH
Monroe, MI	N 6273.2' E 4525.7'	579.3 ft (NAVD 88)	270.0 (feet)

SURFACE CONDITIONS	COORDINATE SYSTEM	DATE START	DATE FINISHED
Gravel parking area	Plant	06/14/07	07/30/07

LOGGED BY	CHECKED BY	APPROVED BY
Graihger/Bonnie TB	Dogbey/Bonnie TB	Meyer

SAMPLING: SAMPLE TYPE	SAMPLE NUMBER	SET 6 INCHES	2ND 6 INCHES	3RD 6 INCHES	N VALUE	SAMPLE RECOVERY

CORING: CORE SIZE	RUN NUMBER	RUN LENGTH	RUN RECOVERY	RQD RECOVERY	PERCENT RECOVERY	RQD
HQ	17	5.0	5.0	4.1	100	82
HQ	18	5.0	5.0	1.5	100	30
HQ	19	5.0	5.0	4.2	100	84

DEPTH (FEET)	ELEVATION (FEET)	CLASSIFICATION OF MATERIALS	REMARKS
90	489	0°,J,N,Cl,Fi,Pl,SR @ 88.5' 10°,J,N,No,No,Pl,SR @ 89.6' 30°,V,VN,Cl,Fi,Pl,SR @ 90.2-90.3'	Water level @ 21.8' prior to drilling on 07/27/07.
91	488	siltstone band; very fine grained; white; highly weathered; very weak; friable; properties comparable to (ML) low plasticity, medium toughness, slow dilatancy soil fines; firm; @ 90.8-91.0'	
92	487	0°,J,VN,Cl,Pa,WA,R @ 91.6' 90°,J,T,No,No,Pl,R @ 91.8-92.1' 60°,J,T,No,No,WA,R @ 91.8'	
93	486	siltstone band; very fine grained; light gray; highly weathered; very weak; friable; properties comparable to low plasticity, medium toughness, slow dilatancy soil fines; firm; @ 92.1-92.15'	
94	485	breccia; depositional; carbonate; grayish brown & very dark gray @ 92.5-92.8' 0°,J,T,No,No,Pl,SR @ 94.0' grades w/stylolites @ 94.3'	Core box #5 starts @ 94.0'.
95	484	95.4 BRECCIA, poorly indurated SILTSTONE matrix; very fine grained; light gray; completely weathered; weak; friable; w/clasts of dolomite, light brownish gray; micritic; fresh; strong; hard; (Bass Islands Group). 95.7	
96	483	DOLOMITE; light brownish gray; micritic; fresh; strong; hard; w/stylolites; (Bass Islands Group). 90°,J,T,No,No,Pl,SR @ 97.05-97.2', 98.5-99.1'	
97	482		
98	481	siltstone band; highly weathered; light gray; very fine grained to micritic; highly weathered; @ 98.25-98.3' 10°,J,VN,Cl,Sp,Pl,SR @ 98.7', 99.40', 99.45' 0°,J,VN,Cl,Sp,Pl,SR @ 95.8', 95.9', 96.3', 96.6', 96.75', 97.0', 97.15', 97.3', 97.45', 97.75', 97.9', 98.1', 98.4', 98.65', 98.8', 98.9', 99.05', 99.65', 99.95'	
99	480		
100	479	0°,J,VN,Cl,Sp,Pl,SR @ 100.2'	
101	478	90°,J,T,No,No,Pl,SR @ 100.8-100.9', 101.2-101.4' 0°,J,VN,No,No,Pl,SR @ 100.8', 100.9', 101.1', 101.2', 101.4'	
102	477	20°,J,T,No,No,Pl,SR @ 102.3-102.35'	
103	476	0°,J,N,Cl,Fi,Pl,SR @ 102.9'	
104	475	10°,J,N,anhydrite,Fi,Pl,SR @ 103.95' 10°,J,N,Cl,Fi,Pl,SR @ 104.0'	
105			

BLACK & VEATCH

BORING LOG

BORING NO. RB-C2

CLIENT	PROJECT	PROJECT NO.
Detroit Edison	Fermi 3 COL Application	147483

PROJECT LOCATION	COORDINATES	GROUND ELEVATION (DATUM)	TOTAL DEPTH
Monroe, MI	N 6273.2' E 4525.7'	579.3 ft (NAVD 88)	270.0 (feet)

SURFACE CONDITIONS	COORDINATE SYSTEM	DATE START	DATE FINISHED
Gravel parking area	Plant	06/14/07	07/30/07

LOGGED BY	CHECKED BY	APPROVED BY
Grainger/Bonnie TB	Dogbey/Bonnie TB	Meyer

SAMPLING							CORING									
SAMPLE TYPE	SAMPLE NUMBER	SET 6 INCHES	2ND 6 INCHES	3RD 6 INCHES	N VALUE	SAMPLE RECOVERY	CORE SIZE	RUN NUMBER	RUN LENGTH	RUN RECOVERY	RQD RECOVERY	PERCENT RECOVERY	RQD	DEPTH (FEET)	SAMPLE TYPE	ELEVATION (FEET)	GRAPHIC LOG	CLASSIFICATION OF MATERIALS	REMARKS
										105.0				105		474		dark gray shale & light gray anhydrite band @ 105.0-105.35'	
																		90°,J,T,Cl,Sp,WA,SR @ 105.35-105.9'	
														106		473		0°,J,T,Cl,Sp,Pl,SR @ 105.5', 106.2'	
																		40°,J,T,No,No,Pl,SR @ 106.4-106.5'	
														107		472		siltstone band; light gray; very fine grained; highly weathered; very weak; friable; @ 107.1-107.2'	
							HQ	20	5.0	5.0	2.9	100	58					0°,J,T,UK,Pa,Pl,SR @ 107.1', 107.2',107.3',107.4'	Core box #6 starts @ 107.3'.
														108		471		0°,J,T,No,No,Pl,SR @ 108.0', 109.3'	
														109		470			
																		10°,J,VN,Cl,Sp,Pl,SR @ 109.6'	
										110.0				110		469			
														111		468		grades w/2% vugs @ 111.4'	
														112		467			
							HQ	21	5.0	5.0	4.75	100	95					grades w/5% vugs @ 112.6'	
														113		466		grades w/2% vugs @ 113.0'	
																		grades w/no vugs @ 113.6'	
														114		465		shale parting @ 113.7'	
																		0°,J,VN,No,No,WA,SR @ 114.1'	
																		0°,J,VN,Cl,Sp,Pl,R @ 114.3'	
										115.0				115		464			
														116		463			
																		10°,J,VN,No,No,Ir,R @ 116.5'	
														117		462			
							HQ	22	5.0	5.0	3.4	100	68	118		461		117.9	
																		DOLOMITE; light gray; micritic; highly weathered; weak; friable; (Bass Islands Group).	Discrete sample 6A taken from HQ22 @ 118.6-118.95'.
																		118.3	
														119		460		DOLOMITE; light gray; micritic; fresh; strong; hard; (Bass Islands Group).	
																		118.6	
														120				CLAYSTONE; gray; highly weathered; weak; friable; (Salina Group - Unit F).	Core box #7 starts @ 119.3'.

BLACK & VEATCH

BORING LOG

BORING NO. RB-C2

CLIENT	PROJECT	PROJECT NO.
Detroit Edison	Fermi 3 COL Application	147483

PROJECT LOCATION	COORDINATES	GROUND ELEVATION (DATUM)	TOTAL DEPTH
Monroe, MI	N 6273.2' E 4525.7'	579.3 ft (NAVD 88)	270.0 (feet)

SURFACE CONDITIONS	COORDINATE SYSTEM	DATE START	DATE FINISHED
Gravel parking area	Plant	06/14/07	07/30/07

LOGGED BY	CHECKED BY	APPROVED BY
Grainger/Bonnie TB	Dogbey/Bonnie TB	Meyer

SAMPLING							CORING										
SAMPLE TYPE	SAMPLE NUMBER	SET 6 INCHES	2ND 6 INCHES	3RD 6 INCHES	N VALUE	SAMPLE RECOVERY	CORE SIZE	RUN NUMBER	RUN LENGTH	RUN RECOVERY	RQD RECOVERY	PERCENT RECOVERY	RQD	DEPTH (FEET)	SAMPLE TYPE	ELEVATION (FEET)	GRAPHIC LOG	CLASSIFICATION OF MATERIALS	REMARKS
														120		459		119.0 CLAYSTONE; dark gray; fresh; strong; hard; (Salina Group - Unit F). grades very dark gray @ 119.8' 90°,J,T,No,No,Pl,SR @ 120.4-121.4',121.7-122.5' grades interbedded dolomite; dark gray @ 120.4' 0°,J,T,No,No,Pl,SR @ 120.8', 120.9', 120.4', 121.0', 121.05', 121.15', 121.3', 121.4',121.7', 121.9', 122.05', 122.1', 122.2', 122.3', 122.5', 123.0', 123.2', 123.7' grades not interbedded @ 121.8' grades interbedded w/dolomite @ 122.5' highly weathered; weak; friable @ 122.6-122.7'	
										120.0				121		458			
														122		457			
							HQ	23	5.0	4.8	1.1	96	22	123		456		123.2 DOLOMITE; argillaceous; very dark grayish brown; micritic; fresh, strong; hard; w/anhydrite bedding; (Salina Group - Unit F). claystone band; highly fractured; very dark gray; moderately weathered (no discoloration); moderately strong; hard @ 124.4-124.6'	
														124		455			
										125.0				125		454			
														126		453		60°,J,T,No,No,Pl,SR @ 125.8-125.9' 0°,J,VN,No,No,Pl,SR @ 126.0', 126.3', 127.0', 128.4' 0°,J,VN,Ca,Pa,Pl,SR @ 126.0' highly fractured @ 126.4-126.6' 90°,J,VN,No,No,Pl,SR @ 126.4-127.2'	
														127		452			
							HQ	24	5.0	4.1	0.7	82	14	128		451		128.3 10°,J,T,No,No,Pl,SR @ 128.3' DOLOMITE; gray; micritic; fresh; strong; hard; (Salina Group - Unit F). 90°,J,T,No,No,Ir,SR @ 128.7-129.3'	
														129		450		129.9	
										130.0				130		449		LIMESTONE; dark gray; micritic; fresh; strong; hard; (Salina Group - Unit F). highly weathered @ 130.1-130.9'	
														131		448		0°,J,VN,No,No,Ir,R @ 131.3'	
							HQ	25	4.2	3.7	0.0	88	0	132		447		0°,J,VN,No,No,Pl,SR @ 131.7', 132.0', 132.7', 132.8' moderately weathered (no discoloration); fractured @ 132.0-132.4' 90°,J,VN,No,No,Pl,SR @ 132.5-132.7'	Core box #8 starts @ 131.9'.
														133		446		highly weathered @ 133.2' 90°,J,VN,No,No,Pl,SR @ 133.3-133.5',133.6-133.7'	
														134		445			
										134.2								134.6	Water level @ 21.5' prior to drilling on
							HQ	26	0.8	0.3	0.0	37	0	135				CLAYSTONE; gray; fresh; weak; moderately hard;	

BLACK & VEATCH

BORING LOG

BORING NO. RB-C2

CLIENT	PROJECT	PROJECT NO.
Detroit Edison	Fermi 3 COL Application	147483

PROJECT LOCATION	COORDINATES	GROUND ELEVATION (DATUM)	TOTAL DEPTH
Monroe, MI	N 6273.2' E 4525.7'	579.3 ft (NAVD 88)	270.0 (feet)

SURFACE CONDITIONS	COORDINATE SYSTEM	DATE START	DATE FINISHED
Gravel parking area	Plant	06/14/07	07/30/07

LOGGED BY	CHECKED BY	APPROVED BY
Grainger/Bonnie TB	Dogbey/Bonnie TB	Meyer

SAMPLING							CORING										
SAMPLE TYPE	SAMPLE NUMBER	SET 6 INCHES	2ND 6 INCHES	3RD 6 INCHES	N VALUE	SAMPLE RECOVERY	CORE SIZE	RUN NUMBER	RUN LENGTH	RUN RECOVERY	RQD RECOVERY	PERCENT RECOVERY	RQD	DEPTH (FEET)	SAMPLE TYPE	ELEVATION (FEET)	GRAPHIC LOG

CLASSIFICATION OF MATERIALS	REMARKS
(Salina Group - Unit F).	07/28/07.
137.1	
DOLOMITE; gray; micritic; fresh; strong; hard; (Salina Group - Unit F).	
138.3	
CLAYSTONE; calcareous; gray; fresh; strong; hard; (Salina Group - Unit F).	
grades gray @ 139.3'	
139.6	
LIMESTONE; dark gray; micritic; fresh; strong; hard; (Salina Group - Unit F).	
anhydrite nodules @ 139.6-139.8'	
90°,J,VN,Ca,Pa,Pl,SR @ 139.8-140.0'	
140.8	
DOLOMITE; light brownish gray; slightly weathered (no discoloration); strong; hard; (Salina Group - Unit F).	
0°,J,VN,UK,Fi,Pl,SR @ 141.9'	
fractured @ 142.0-142.3'	
142.5	
DOLOMITE; gray; micritic; fresh; strong; hard; (Salina Group - Unit F).	
90°,J,T,No,No,Pl,SR @ 143.1-143.5'	
0°,J,T,No,No,Pl,SR @ 143.1', 143.3', 143.5', 143.55', 143.7'	
fractured @ 143.7-144.0'	
30°,J,VN,UK,Pa,Ir,R @ 144.2-144.3'	
0°,J,VN,UK,Pa,Pl,SR @ 144.15', 144.3'	
144.7	
CLAYSTONE; bluish gray; slightly weathered (no discoloration); moderately strong; moderately hard; w/dolomite & limestone interbedding; (Salina Group - Unit F).	
fractured @ 144.8-145.0'	
dolomite band; gray; @ 146.0-146.2'	
fractured @ 146.0-146.2',146.4-146.6'	
dolomite; gray; @ 146.4-146.8'	
40°,J,T,No,No,Pl,SR @ 146.4-146.5'	
90°,J,T,No,No,Pl,SR @ 146.5-146.7'	
10°,J,T,No,No,Pl,SR @ 146.35-146.4'	
20°,J,T,No,No,Pl,S @ 146.8'	
20°,J,T,No,No,Pl,SR @ 147.9'	Sample 8A taken from HQ30 @ 148.1-149.15'

CORE SIZE	RUN NUMBER	RUN LENGTH	RUN RECOVERY	RQD RECOVERY	PERCENT RECOVERY	RQD
HQ	27	5.0	4.5	1.6	90	32
HQ	28	5.0	2.4	0.0	48	0
HQ	29	2.5	2.2	0.0	88	0
HQ	30	2.5	2.5	1.2	100	48

135.0 140.0 145.0 147.5

DEPTH (FEET): 135 136 137 138 139 140 141 142 143 144 145 146 147 148 149 150

ELEVATION (FEET): 444 443 442 441 440 439 438 437 436 435 434 433 432 431 430

BLACK & VEATCH

BORING LOG

BORING NO. RB-C2

CLIENT	PROJECT	PROJECT NO.
Detroit Edison	Fermi 3 COL Application	147483

PROJECT LOCATION	COORDINATES	GROUND ELEVATION (DATUM)	TOTAL DEPTH
Monroe, MI	N 6273.2' E 4525.7'	579.3 ft (NAVD 88)	270.0 (feet)

SURFACE CONDITIONS	COORDINATE SYSTEM	DATE START	DATE FINISHED
Gravel parking area	Plant	06/14/07	07/30/07

LOGGED BY	CHECKED BY	APPROVED BY
Grainger/Bonnie TB	Dogbey/Bonnie TB	Meyer EM

SAMPLING							CORING									
SAMPLE TYPE	SAMPLE NUMBER	SET 6 INCHES	2ND 6 INCHES	3RD 6 INCHES	N VALUE	SAMPLE RECOVERY	CORE SIZE	RUN NUMBER	RUN LENGTH	RUN RECOVERY	RQD RECOVERY	PERCENT RECOVERY	RQD	DEPTH (FEET)	SAMPLE TYPE	ELEVATION (FEET)	GRAPHIC LOG	CLASSIFICATION OF MATERIALS	REMARKS
										150.0				150		429			Core box #9 starts @ 150.7'.
							HQ	31	5.0	3.5	1.7	70	34	151		428			
														152		427		limestone band; gray; micritic; fresh; moderately strong; moderately hard; @ 152.65-152.8'	
														153		426		dolomite band; gray; micritic; fresh; strong; hard; @ 153.6-153.8'	
														154		425			Discrete sample 9A taken from HQ31 @ 154.4-154.9'.
										155.0				155		424		grades highly weathered; comparable properties to medium plasticity, medium toughness, no dilatancy soil fines; soft consistency @ 155.0	PP = 2.0 TSF @ 155-156'.
							HQ	32	5.0	2.0	0.9	40	18	156		423			Discrete sample 9B taken from HQ32 @ 155.5-156.0'.
														157		422			
														158		421		grades slightly weathered (no discoloration); low hardness; comparable properties no longer apply @ 157.5'	
														159		420			
										160.0				160		419		159.9 DOLOMITE; gray; (Salina Group - Unit F).	
							HQ	33	2.5	1.8	1.0	72	40	161		418			
														162		417		90°,J,T,No,No,Pl,SR @ 162.0-162.2' (2 perpendicular joints)	
										162.5								162.3	
							HQ	34	2.5	2.2	0.9	80	36	163		416		CLAYSTONE; bluish gray; slightly weathered (no discoloration); moderately strong; moderately hard; w/ dolomite & limestone interbedding; (Salina Group - Unit F).	
														164		415		dolomite band @ 162.8-162.9' dolomite band @ 163.5-163.6' 90°,J,T,No,No,Pl,SR @ 163.5-163.6' 90°,J,VN,UK,Pa,WA,SR @ 163.8-163.9'	
														165					

BLACK & VEATCH

BORING LOG

BORING NO. RB-C2

CLIENT	PROJECT	PROJECT NO.
Detroit Edison	Fermi 3 COL Application	147483

PROJECT LOCATION	COORDINATES	GROUND ELEVATION (DATUM)	TOTAL DEPTH
Monroe, MI	N 6273.2' E 4525.7'	579.3 ft (NAVD 88)	270.0 (feet)

SURFACE CONDITIONS	COORDINATE SYSTEM	DATE START	DATE FINISHED
Gravel parking area	Plant	06/14/07	07/30/07

LOGGED BY	CHECKED BY	APPROVED BY
Grainger/Bonnie	Dogbey/Bonnie	Meyer

SAMPLING							CORING									
SAMPLE TYPE	SAMPLE NUMBER	SET 6 INCHES	2ND 6 INCHES	3RD 6 INCHES	N VALUE	SAMPLE RECOVERY	CORE SIZE	RUN NUMBER	RUN LENGTH	RUN RECOVERY	RQD RECOVERY	PERCENT RECOVERY	RQD	DEPTH (FEET)	SAMPLE TYPE	ELEVATION (FEET)	GRAPHIC LOG	CLASSIFICATION OF MATERIALS	REMARKS
										165.0				165		414		60°,J,VN,Cl,Pa,Pl,SR @ 164.8-164.85' dolomite @ 164.8-164.9' grades highly weathered @ 165.0'	Water level @ 19.6' prior to drilling on 07/29/07.
														166		413			
														167		412		167.0 DOLOMITE; (Salina Group - Unit F). 90°,J,T,No,No,Pl,SR @ 167.0-167.4' 30°,J,T,No,No,Pl,SR @ 167.1-167.3' fractured @ 167.1-167.4' 60°,J,T,No,No,Pl,SR @ 167.5-167.8'	
							HQ	35	5.0	2.2	0.0	44	0	168		411		168.1 CLAYSTONE; bluish gray; slightly weathered; moderately strong; moderately hard; w/dolomite & limestone interbedding; (Salina Group - Unit F).	
														169		410			
										170.0				170		409			
							HQ	36	2.5	0.6	0.0	24	0	171		408			
														172		407			
										172.5				173		406		dolomite @ 173.1-173.4' fractured @ 173.1-173.4'	
							HQ	37	2.5	0.5	0.0	20	0	174		405		173.8 BRECCIA; poorly indurated; claystone; calcareous; bluish gray; fresh; weak; low hardness; w/clasts of dolomite; (Salina Group - Unit F).	
										175.0				175		404			Core box #10 starts @ 175.0'.
							HQ	38	1.0	0.0	0.0	0	0	176		403			Runs 38 & 39 - possibly soft material washing out during drilling.
							HQ	39	1.5	176.0 0.0	0.0	0	0	177		402			
										177.5				178		401		dolomite band @ 177.5-177.9' grades non-calcareous claystone @ 177.9'	
							HQ	40	2.5	2.4	1.3	96	52	179		400			Sample 10A taken from HQ40 @ 179.05-179.3'.
														180				179.8	

BLACK & VEATCH

BORING LOG

BORING NO. RB-C2

CLIENT	PROJECT	PROJECT NO.
Detroit Edison	Fermi 3 COL Application	147483

PROJECT LOCATION	COORDINATES	GROUND ELEVATION (DATUM)	TOTAL DEPTH
Monroe, MI	N 6273.2' E 4525.7'	579.3 ft (NAVD 88)	270.0 (feet)

SURFACE CONDITIONS	COORDINATE SYSTEM	DATE START	DATE FINISHED
Gravel parking area	Plant	06/14/07	07/30/07

LOGGED BY	CHECKED BY	APPROVED BY
Grainger/Bonnie TB	Dogbey/Bonnie TB	Meyer

SAMPLING							CORING									
SAMPLE TYPE	SAMPLE NUMBER	SET 6 INCHES	2ND 6 INCHES	3RD 6 INCHES	N VALUE	SAMPLE RECOVERY	CORE SIZE	RUN NUMBER	RUN LENGTH	RUN RECOVERY	RQD RECOVERY	PERCENT RECOVERY	RQD	DEPTH (FEET)	SAMPLE TYPE	ELEVATION (FEET)	GRAPHIC LOG	CLASSIFICATION OF MATERIALS	REMARKS
							HQ	41	2.5	180.0 2.4	0.0	96	0	180 181 182		399 398 397		BRECCIA; indurated; limestone matrix; grayish brown; micritic; fresh; moderately strong; moderately hard; w/dolomite clasts; light grayish brown; micritic; fresh; strong; hard; (Salina Group - Unit F). 0°,J,T,No,No,PI,SR @ 180.5', 180.9', 181.1' 30°,J,T,No,No,PI,SR @ 180.6-180.7' 10°,J,T,No,No,PI,SR @ 181.2', 181.3', 181.7', 181.9', 182.0'	
							HQ	42	2.5	182.5 2.5	0.5	100	20	183 184		396 395		0°,J,VN,No,No,PI,R @ 182.65', 184.2' 10°,J,VN,No,No,PI,SR @ 182.7', 183.8', 184.7' 30°,J,VN,No,No,WA,SR @ 183.1', 183.35'	Discrete sample 10B taken from HQ42 @ 184.2-184.7'.
							HQ	43	5.0	185.0 4.7	2.3	94	46	185 186 187 188 189 190		394 393 392 391 390		0°,J,VN,No,No,PI,SR @ 185.5', 186.1', 186.4' 186.0 CLAYSTONE; gray; slightly weathered; moderately strong; medium hard; w/carbonate bands; (Salina Group - Unit F). fractured @ 187.9-188.2' 10°,J,VN,No,No,PI,SR @ 188.5', 188.6' 60°,J,VN,No,No,PI,SR @ 188.5-188.7'	
							HQ	44	5.0	190.0 4.5	2.7	90	54	191 192 193 194 195		389 388 387 386 385		191.3 LIMESTONE; bluish gray; micritic; fresh; strong; hard; (Salina Group - Unit F). 192.2 DOLOMITE; light brownish gray; w/interbedded limestone; 10° bedding; (Salina Group - Unit F). 192.7 LIMESTONE; bluish gray; micritic; fresh; strong; hard; 15% vugs; (Salina Group - Unit F). 0°,J,VN,No,No,PI,SR @ 192.8', 193.15', 193.8', 193.9' grades 10% vugs @ 193.5' 193.9 DOLOMITE; light brownish gray w/interbedded limestone; 10° bedding; (Salina Group - Unit F). 194.4	Core box #11 starts @ 192.7'.

BLACK & VEATCH

BORING LOG

BORING NO. RB-C2

CLIENT	PROJECT	PROJECT NO.
Detroit Edison	Fermi 3 COL Application	147483

PROJECT LOCATION	COORDINATES	GROUND ELEVATION (DATUM)	TOTAL DEPTH
Monroe, MI	N 6273.2' E 4525.7'	579.3 ft (NAVD 88)	270.0 (feet)

SURFACE CONDITIONS	COORDINATE SYSTEM	DATE START	DATE FINISHED
Gravel parking area	Plant	06/14/07	07/30/07

LOGGED BY	CHECKED BY	APPROVED BY
Grainger/Bonnie TB	Dogbey/Bonnie TB	Meyer EM

SAMPLING							CORING									
SAMPLE TYPE	SAMPLE NUMBER	SET 6 INCHES	2ND 6 INCHES	3RD 6 INCHES	N VALUE	SAMPLE RECOVERY	CORE SIZE	RUN NUMBER	RUN LENGTH	RUN RECOVERY	RQD RECOVERY	PERCENT RECOVERY	RQD	DEPTH (FEET)	SAMPLE TYPE	ELEVATION (FEET)	GRAPHIC LOG	CLASSIFICATION OF MATERIALS	REMARKS
										195.0				195		384		LIMESTONE; bluish gray; micritic; fresh; strong; hard; (Salina Group - Unit F). 20°,J,VN,No,No,PI,SR @ 194.7'	
														196		383		195.2 DOLOMITE; interbedded; (Salina Group - Unit F).	
														197		382		195.7 LIMESTONE; bluish gray; micritic; fresh; strong; hard; (Salina Group - Unit F).	
							HQ	45	5.0	4.0	2.25	80	45	198		381		dolomite band; brown; moderately strong; moderately hard; @ 197.3-197.45' 40°,J,VN,UK,Pa,PI,SR @ 197.45-197.55', 197.5-197.6' 30°,J,VN,UK,Pa,PI,SR @ 197.6-197.75'	
														199		380		dolomite band; grayish brown; moderately strong; moderately hard; @ 197.7-197.9' dolomite; light grayish brown; strong; hard; @ 197.95-198.2' 10°,J,T,UK,Fi,PI,SR @ 198.2', 198.3', 198.4'	
										200.0				200		379		dolomite; strong; hard; @ 198.4-198.8' 70°,J,N,UK,Pa,PI,SR @ 198.4-198.7'	
														201		378		dolomite; gray; micritic; fresh; strong; hard; @ 198.9-199.3' claystone band; dark bluish gray; micritic; fresh; weak; low hardness; 10° bedding; @ 199.3-199.4'	
														202		377		200.1 DOLOMITE; interbedded; moderately strong; moderately hard; (Salina Group - Unit F).	
							HQ	46	5.0	4.8	2.2	96	44	203		376		200.9 LIMESTONE; bluish gray; micritic; fresh; strong; hard; (Salina Group - Unit F). 60°,J,N,No,No,PI,SR @ 202.3-203.5'	
														204		375		202.5 BRECCIA; indurated; claystone; calcareous; gray; fresh; moderately strong; low hardness; w/clasts of light grayish brown; micritic; slightly weathered; strong; moderately hard; dolomite; (Salina Group - Unit F). highly weathered @ 202.5-203.5'	
										205.0				205		374		60°,J,VN,No,No,PI,SR @ 204.0-204.15' 30°,J,VN,No,No,PI,SR @ 204.7-204.8', 204.8-204.9'	
														206		373		205.4 LIMESTONE; dark grayish brown; vuggy; micritic; strong to very strong; hard; 15% vugs, some connected, some filled w/claystone; grayish brown; (Salina Group - Unit F).	Core box #12 starts @ 206.3'.
							HQ	47	5.0	4.5	2.5	90	50	207		372		0°,J,T,No,No,PI,SR @ 205.5',206.0' 20°,J,T,No,No,PI,SR @ 206.9' 10°,J,T,No,No,PI,SR @ 207.0' 0°,J,T,No,No,PI,SR @ 207.5',207.6'	
														208		371		0°,J,T,No,No,PI,SR @ 208.2'	
														209		370		10°,J,VN,Ca,Pa,PI,SR @ 209.2'	
														210				209.2 DOLOMITE; shale; light brownish gray; micritic; fresh; strong; hard; (Salina Group - Unit F).	

BLACK & VEATCH

BORING LOG

BORING NO. RB-C2

CLIENT	PROJECT	PROJECT NO.
Detroit Edison	Fermi 3 COL Application	147483

PROJECT LOCATION	COORDINATES	GROUND ELEVATION (DATUM)	TOTAL DEPTH
Monroe, MI	N 6273.2' E 4525.7'	579.3 ft (NAVD 88)	270.0 (feet)

SURFACE CONDITIONS	COORDINATE SYSTEM	DATE START	DATE FINISHED
Gravel parking area	Plant	06/14/07	07/30/07

LOGGED BY	CHECKED BY	APPROVED BY
Grainger/Bonnie TB	Dogbey/Bonnie TB	Meyer

SAMPLING							CORING									
SAMPLE TYPE	SAMPLE NUMBER	SET 6 INCHES	2ND 6 INCHES	3RD 6 INCHES	N VALUE	SAMPLE RECOVERY	CORE SIZE	RUN NUMBER	RUN LENGTH	RUN RECOVERY	RQD RECOVERY	PERCENT RECOVERY	RQD	DEPTH (FEET)	SAMPLE TYPE	ELEVATION (FEET)

GRAPHIC LOG	CLASSIFICATION OF MATERIALS	REMARKS

CORE SIZE	RUN NUMBER	RUN LENGTH	RUN RECOVERY	RQD RECOVERY	PERCENT RECOVERY	RQD	DEPTH (FEET)	ELEVATION (FEET)	CLASSIFICATION OF MATERIALS	REMARKS
			210.0				210	369	highly weathered; weak; low hardness @ 209.7-209.8' 80°,J,T,No,No,Pl,SR @ 210.05-210.3' highly weathered; weak; low hardness @ 210.6-210.7' shale parting @ 210.75' highly weathered; extremely weak; low hardness @ 211.4-211.9'	
							211	368		
							212	367	212.0 DOLOMITE; dark gray; micritic; fresh; strong; hard; (Salina Group - Unit F).	
HQ	48	5.0	5.0	1.9	100	38	213	366	212.4 DOLOMITE; dark gray; micritic; weak; low hardness; (Salina Group - Unit F).	
							214	365	212.8 DOLOMITE; dark gray; micritic; fresh; strong; hard; (Salina Group - Unit F).	
							215	364	213.3 LIMESTONE; gray; micritic; fresh; strong to very strong; hard; (Salina Group - Unit F). fragmented @ 213.8-214.0' 10°,J,T,No,No,Pl,SR @ 214.0'	
			215.0				216	363	214.1 DOLOMITE; light grayish brown; micritic; fresh; strong; hard; w/limestone layers; (Salina Group - Unit F). 90°,J,VN,Ca,Pa,Pl,SR @ 214.1-214.3', 214.5-214.9', 216.1-216.3', 216.4-216.5', 216.5-217.3' 10°,J,VN,Ca,Pa,Pl,SR @ 214.6'	
HQ	49	5.0	4.0	1.3	80	26	217	362	limestone band; dark grayish brown; micritic; fresh; strong; hard @ 216.4-216.5'	
							218	361	0°,J,T,No,No,Pl,SR @ 216.6', 216.7', 216.9',217.2', 218.2', 217.85', 217.95'	
							219	360	217.3 LIMESTONE; dark grayish brown; micritic; fresh; strong hard; (Salina Group - Unit F).	
							220	359	217.9 DOLOMITE; light grayish brown; micritic; fresh; strong; hard; w/limestone layers; (Salina Group - Unit F). 0°,J,T,No,No,Pl,SR @ 218.7' grades dark gray @ 218.9'	Core box #13 starts @ 220.0'.
			220.0				221	358	219.1 LIMESTONE; dark grayish brown; micritic; fresh; strong; hard; 5% vugs; (Salina Group - Unit F). 0°,J,T,No,No,Pl,SR @ 220.3' 80°,J,T,No,No,Pl,SR @ 220.4-220.6' 50°,J,T,No,No,Pl,SR @ 220.5-220.65'	
							222	357	221.0 DOLOMITE; argillaceous; gray; micritic; fresh; strong; hard; (Salina Group - Unit F). grades light grayish brown @ 221.3' claystone band @ 221.5-221.7'	
HQ	50	5.0	4.2	1.9	84	38	223	356	221.8 LIMESTONE; dark grayish brown; micritic; fresh; strong; hard; (Salina Group - Unit F).	
							224	355	222.8 DOLOMITE; light grayish brown; micritic; fresh; strong; hard; (Salina Group - Unit F). 0°,J,T,No,No,Pl,SR @ 224.0', 224.5', 224.8'	
							225			

BLACK & VEATCH

BORING LOG

BORING NO. RB-C2

CLIENT	PROJECT	PROJECT NO.
Detroit Edison	Fermi 3 COL Application	147483

PROJECT LOCATION	COORDINATES	GROUND ELEVATION (DATUM)	TOTAL DEPTH
Monroe, MI	N 6273.2' E 4525.7'	579.3 ft (NAVD 88)	270.0 (feet)

SURFACE CONDITIONS	COORDINATE SYSTEM	DATE START	DATE FINISHED
Gravel parking area	Plant	06/14/07	07/30/07

LOGGED BY	CHECKED BY	APPROVED BY
Grainger/Bonnie TB	Dogbey/Bonnie TB	Meyer EM

SAMPLING							CORING									
SAMPLE TYPE	SAMPLE NUMBER	SET 6 INCHES	2ND 6 INCHES	3RD 6 INCHES	N VALUE	SAMPLE RECOVERY	CORE SIZE	RUN NUMBER	RUN LENGTH	RUN RECOVERY	RQD RECOVERY	PERCENT RECOVERY	RQD	DEPTH (FEET)	SAMPLE TYPE	ELEVATION (FEET)	GRAPHIC LOG	CLASSIFICATION OF MATERIALS	REMARKS
										225.0				225		354		fossils @ 224.0-224.3'	
																		0°,J,T,No,No,Pl,SR @ 225.35', 225.6', 225.65'	
														226		353		10°,J,T,No,No,Pl,SR @ 226.05'	
																		226.5	
														227		352		CLAYSTONE; gray; highly weathered; very weak; low hardness; (Salina Group - Unit F).	
							HQ	51	5.0	2.7	1.0	54	20	228		351		228.0	
																		DOLOMITE; grayish brown; fresh; strong; hard; (Salina Group - Unit F).	
														229		350		228.5	
																		CLAYSTONE; gray; highly weathered; very weak; low hardness; (Salina Group - Unit F).	
										230.0				230		349		grades very weak to extremely weak; w/properties comparable to medium plasticity, medium toughness, no dilatancy soil fines; soft to firm; moist	
														231		348		grades slightly weathered; comparable soil properties no longer apply @ 231.0'	
							HQ	52	5.0	2.0	0.0	40	0.0	232		347			
														233		346			
														234		345		dolomite band; dark gray @ 234.0-234.2'	
										235.0				235		344			
														236		343		236.2	236.0' - 0.9 PPM, PID reading, reading in bagged sample
							HQ	53	2.5	3.5	1.1	100	44	237		342		DOLOMITE; dark gray; micritic; fresh; strong; hard; (Salina Group - Unit F). 70°,J,VN,Cl,Pa,Pl,SR @ 236.5-236.7' 0°,J,VN,No,No,Pl,SR @ 236.7'	
										237.5								237.8	
														238		341		CLAYSTONE; gray; micritic; slightly to highly weathered (no discoloration); weak to extremely weak; low hardness to soft; (Salina Group - Unit F).	Core box #14 starts @ 238.3'.
							HQ	54	2.5	2.0	0.4	80	16	239		340		dolomite band; dark gray; fragmented @ 238.2-238.4' grades slightly to moderately weathered (no discoloration); weak; low to moderately hard @ 239.0'	
														240					

BLACK & VEATCH

BORING LOG

BORING NO. RB-C2

CLIENT	PROJECT	PROJECT NO.
Detroit Edison	Fermi 3 COL Application	147483

PROJECT LOCATION	COORDINATES	GROUND ELEVATION (DATUM)	TOTAL DEPTH
Monroe, MI	N 6273.2' E 4525.7'	579.3 ft (NAVD 88)	270.0 (feet)

SURFACE CONDITIONS	COORDINATE SYSTEM	DATE START	DATE FINISHED
Gravel parking area	Plant	06/14/07	07/30/07

LOGGED BY	CHECKED BY	APPROVED BY
Grainger/Bonnie TB	Dogbey/Bonnie TD	Meyer

SAMPLING: SAMPLE TYPE	SAMPLE NUMBER	SET 6 INCHES	2ND 6 INCHES	3RD 6 INCHES	N VALUE	SAMPLE RECOVERY

CORING: CORE SIZE	RUN NUMBER	RUN LENGTH	RUN RECOVERY	RQD RECOVERY	PERCENT RECOVERY	RQD
HQ	55	5.0	4.5	2.75	90	55
HQ	56	5.0	4.6	3.4	92	68
HQ	57	5.0	4.5	3.65	90	73

DEPTH (FEET)	SAMPLE TYPE	ELEVATION (FEET)	GRAPHIC LOG	CLASSIFICATION OF MATERIALS	REMARKS
240		339		240.0	Discreate jar sample 14A taken from HQ55 @ 240.0-240.1'.
				240.7 DOLOMITE; brownish gray; micritic; fresh; strong; hard; w/limestone; (Salina Group - Unit F). 0°,J,VN,UK,PI,SR @ 240.8' shale parting @ 241.05'	
241		338			
242		337		241.4 DOLOMITE; gray; fresh; strong; hard; (Salina Group - Unit F). 15°,J,T,No,No,PI,SR @ 241.7'	
243		336		241.7 DOLOMITE; pale brown; micritic; fresh; strong; hard; fossiliferous; (Salina Group - Unit E). highly fragmented @ 241.7-242.1' w/stylolite and fossil voids @ 242.1-242.9' 0°,J,T,No,No,PI,SR @ 242.2', 243.15', 244.0' fossil pits @ 244.1-244.3' 40°,J,T,No,No,Ir,SR @ 244.35-244.55'	
244		335			
245		334		245.0 fossil pits @ 245.4-246.4'	
246		333			
				fragmented @ 246.6-246.8'	
247		332		fossil pits @ 247.0-248.8' 0°,J,T,No,No,PI,R @ 247.1', 247.2', 247.4', 248.6'	
248		331			
249		330		claystone band; white; micritic; highly weathered; soft; very weak @ 248.9-249.0'	248.9'-249.0': 5.7 PPM, PID reading in headspace of plastic bag stored in core box.
250		329		250.0 40°,J,T,No,No,PI,SR @ 250.0-250.1' 0°,J,VN,CI,Pa,PI,SR @ 250.1', 251.0', 251.4', 251.5' fragmented @ 250.1-250.25' shale partings @ 251.6', 251.7' fossil pits @ 251.0-251.5'	
251		328			
252		327			Core box #15 starts @ 251.51'.
253		326			
254		325			
255				40°,J,T,No,No,PI,S @ 254.7-254.9'	

BLACK & VEATCH

BORING LOG

BORING NO. RB-C2

CLIENT	PROJECT	PROJECT NO.
Detroit Edison	Fermi 3 COL Application	147483

PROJECT LOCATION	COORDINATES	GROUND ELEVATION (DATUM)	TOTAL DEPTH
Monroe, MI	N 6273.2' E 4525.7'	579.3 ft (NAVD 88)	270.0 (feet)

SURFACE CONDITIONS	COORDINATE SYSTEM	DATE START	DATE FINISHED
Gravel parking area	Plant	06/14/07	07/30/07

LOGGED BY	CHECKED BY	APPROVED BY
Grainger/Bonnie TB	Dogbey/Bonnie TB	Meyer

SAMPLING: SAMPLE TYPE	SAMPLE NUMBER	SET 6 INCHES	2ND 6 INCHES	3RD 6 INCHES	N VALUE	SAMPLE RECOVERY

CORING: CORE SIZE	RUN NUMBER	RUN LENGTH	RUN RECOVERY	RQD RECOVERY	PERCENT RECOVERY	RQD
HQ	58	5.0	4.2	1.4	84	28
HQ	59	5.0	5.0	4.9	100	98
HQ	60	5.0	4.7	4.3	94	86

DEPTH (FEET)	SAMPLE TYPE	ELEVATION (FEET)	GRAPHIC LOG	CLASSIFICATION OF MATERIALS	REMARKS
255.0		324		vuggy dolomite (5% vugs) @ 255.0-255.3'	
				255.3	
				CLAYSTONE; gray; micritic; highly to slightly weathered; weak; low hardness; (Salina Group - Unit E).	
256		323		255.7	
				DOLOMITE; gray; micritic; highly weathered to fresh; weak to strong; low hardness to hard; (Salina Group - Unit E).	
257		322		shale parting @ 256.2'	
				256.4	
				DOLOMITE; light grayish brown; micritic; fresh; strong; hard; (Salina Group - Unit E).	
258		321		fractured @ 256.4-257.0'	
				0°,J,VN,shale,Fi,Pl,SR @ 256.9'	
259		320		257.0	
				DOLOMITE; grayish brown; micritic; fresh; strong; hard; (Salina Group - Unit E).	
260.0				30°,J,VN,Cl,Fi,WA,S @ 257.25-257.35'	
260		319		0°,J,VN,Cl,Fi,Pl,SR @ 257.4',257.55',258.1',258.2'	
				258.2	
				DOLOMITE; gray to grayish brown; micritic; fresh; strong; hard; w/gypsum partings and bands; (Salina Group - Unit E).	
261		318		0°,J,VN,Cl,Fi,Pl,SR @ 258.4',259.0'	
				shale parting @ 259.9'	
262		317		gypsum nodules @ 258.9-259.1',260.8-261.1',262.85-263.1', 264.0'	
				gypsum partings @ 259.1-259.8'	
263		316		gypsum parting (0.2") 260.05'	
				gypsum parting (0.05") @ 260.15'	
264		315		gypsum parting (0.1") @ 260.2'	
				gypsum parting (0.15") @ 260.4'	
265.0				gypsum parting (0.2") @ 260.55'	
265		314		gypsum partings @ 260.6-262.0'	
				grades grayish brown @ 262.5'	
266		313		convoluted gypsum beds & nodules w/shale partings @ 262.0-262.7	
				grades light grayish brown @ 263.4'	Core box #16 starts @ 264.7'.
267		312		grades grayish brown @ 263.9'	
				gypsum nodules w/shale parting @ 264.25'	
268		311		grades w/shale partings @ 264.5'	
				265.2	
269		310		DOLOMITE; gray; micritic; fresh; strong; hard; w/ shale partings; (Salina Group - Unit E).	
270				0°,J,VN,No,No,Ir,SR @ 265.7'	
				shale parting (0.2"-0.25") @ 265.95'	
				shale parting @ 266.08'	
				267.0	
				DOLOMITE; light grayish brown; micritic; fresh; strong; hard; w/gypsum nodules & parting; (Salina Group - Unit E).	
				gypsum parting @ 267.1-267.5'	
				gypsum nodules @ 267.0-267.1'	
				gypsum parting (0.1-0.2") @ 267.2'	
				grades grayish brown @ 267.5'	
				grades w/shale parting @ 267.5'	
				gypsum nodules & bands, convoluted @ 268.1-268.7'	
				gypsum parting @ 268.7-269.2'	

BLACK & VEATCH

BORING LOG

BORING NO. RB-C2

CLIENT	PROJECT	PROJECT NO.
Detroit Edison	Fermi 3 COL Application	147483

PROJECT LOCATION	COORDINATES	GROUND ELEVATION (DATUM)	TOTAL DEPTH
Monroe, MI	N 6273.2' E 4525.7'	579.3 ft (NAVD 88)	270.0 (feet)

SURFACE CONDITIONS	COORDINATE SYSTEM	DATE START	DATE FINISHED
Gravel parking area	Plant	06/14/07	07/30/07

LOGGED BY	CHECKED BY	APPROVED BY
Grainger/Bonnie TB	Dogbey/Bonnie TB	Meyer EM

SAMPLING: SAMPLE TYPE	SAMPLE NUMBER	SET 6 INCHES	2ND 6 INCHES	3RD 6 INCHES	N VALUE	SAMPLE RECOVERY
CORING: CORE SIZE	RUN NUMBER	RUN LENGTH	RUN RECOVERY	RQD RECOVERY	PERCENT RECOVERY	RQD

DEPTH (FEET)	SAMPLE TYPE	ELEVATION (FEET)	GRAPHIC LOG	CLASSIFICATION OF MATERIALS	REMARKS
270		309		gypsum nodules & partings @ 269.2-270.0'	Bottom of boring @ 270.0'. Water level @ 19.9' @ completion of drilling. Boring caved @ 176.7'. Cleared cavein. Caved to 259.1' Backfilled from 259.1 w/ bentenite chips to 62' bgs on 09/06/07. Continued w/bentionite chips to 35' bgs on 09/07/07. Continued w/ bentionite chips to 5' bgs then gravel to surface on 09/12/07.
271		308			
272		307			
273		306			
274		305			
275		304			
276		303			
277		302			
278		301			
279		300			
280		299			
281		298			
282		297			
283		296			
284		295			
285					

BLACK & VEATCH

BORING LOG

BORING NO. RB-C3

CLIENT	PROJECT	PROJECT NO.
Detroit Edison	Fermi 3 COL Application	147483

PROJECT LOCATION	COORDINATES	GROUND ELEVATION (DATUM)	TOTAL DEPTH
Monroe, MI	N 6273.2' E 4606.0'	580.6 ft (NAVD 88)	274.0 (feet)

SURFACE CONDITIONS	COORDINATE SYSTEM	DATE START	DATE FINISHED
Gravel parking lot	Plant	06/13/07	08/01/07

LOGGED BY	CHECKED BY	APPROVED BY
Grainger/Bonnie/Mass	Dogbey/Mass	Meyer

SAMPLING							CORING									
SAMPLE TYPE	SAMPLE NUMBER	SET 6 INCHES	2ND 6 INCHES	3RD 6 INCHES	N VALUE	SAMPLE RECOVERY	CORE SIZE	RUN NUMBER	RUN LENGTH	RUN RECOVERY	RQD RECOVERY	PERCENT RECOVERY	RQD	DEPTH (FEET)	SAMPLE TYPE	ELEVATION (FEET)	GRAPHIC LOG	CLASSIFICATION OF MATERIALS	REMARKS
														0		580		COBBLES - About 60% angular, flat to cubical, hard cobbles w/max. size 10"; about 20% fine to coarse, angular, hard gravel w/max. size 3"; about 15% fine to coarse, angular, hard sand; about 5% fines; dark grayish brown; moist; strong reaction w/HCl; homogeneous; (Fill).	Boring advanced w/vacuum excavation.
														1		579			
														2		578			
														3		577			
			3.7											4		576			Below 3.7' continued w/4" ID sonic continuous sampler w/ nominal 6" temporary steel casing advanced w/sampler.
S	1					1.3								5		575			Discrete sample S1 collected from S-1.
			5.0											6		574			
														7		573			Discrete sample S2 collected from S-2.
S	2					NR								8		572			
														9		571			
			10.0											10		570			
														11		569			
														12		568			
S	3					3.0								13		567		Fat CLAY (CH) - About 95% high plasticity, high toughness, no dilatancy high dry strength fines; about 5% fine sand; gray & dark reddish brown; soft; moist; weak reaction w/HCl; laminated; (Lacustrine Deposit).	
														14		566			
														15					Discrete sample S3 collected @

BORING LOG

CLIENT	PROJECT	PROJECT NO.
Detroit Edison	Fermi 3 COL Application	147483

PROJECT LOCATION	COORDINATES	GROUND ELEVATION (DATUM)	TOTAL DEPTH
Monroe, MI	N 6273.2' E 4606.0'	580.6 ft (NAVD 88)	274.0 (feet)

SURFACE CONDITIONS	COORDINATE SYSTEM	DATE START	DATE FINISHED
Gravel parking lot	Plant	06/13/07	08/01/07

LOGGED BY	CHECKED BY	APPROVED BY
Grainger/Bonnie/Mass	Dogbey/Mass	Meyer

SAMPLING: SAMPLE TYPE	SAMPLE NUMBER	SET 6 INCHES	2ND 6 INCHES	3RD 6 INCHES	N VALUE	SAMPLE RECOVERY	CORING: CORE SIZE	RUN NUMBER	RUN LENGTH	RUN RECOVERY	RQD RECOVERY	PERCENT RECOVERY	RQD	DEPTH (FEET)	ELEVATION (FEET)	CLASSIFICATION OF MATERIALS	REMARKS
										15.0				15	565		14.4-14.6'. Set nominal 6" temporary steel casing to 14.5'. Below 15.0' continue w/NWJ rods & 4½" tricone bit using bentonite mud as drilling fluid. SPT performed w/D-50 automatic hammer. Split SPT-4 into two jars, A & B.
SPT	4	3	3	5	8	1.3								16	564	—16.0— Lean CLAY with Sand (CL) - About 85% medium plasticity, medium toughness, slow dilatancy, medium dry strength fines; about 15% fine to medium sand; dark grayish brown & light gray; firm; moist; strong reaction w/HCl; homogeneous; (Glacial Till).	
														17	563		
														18	562		
														19	561		
														20	560		TW-5: bottom 6" of tube bent.
TW	5					2.0								21	559		
														22	558		
														23	557	—23.3— Lean CLAY with Sand (CL) - About 85% medium plasticity, medium toughness, no dilatancy, high dry strength fines; about 15% fine to coarse, rounded to subrounded, hard sand; dark gray; very hard; moist; strong reaction w/HCl; homogeneous; (Glacial Till).	
														24	556		
														25	555		
SPT	6	9	18	30	48	1.5								26	554		
														27	553		
CA	7					1.6								28	552		
										29.0				29	551	grades w/gabbro gravel, rounded @ 29.0'	Tricone bit refusal @ 30.0'. Caved to 29.0'
														30			

BLACK & VEATCH

BORING LOG

BORING NO. RB-C3

CLIENT	PROJECT	PROJECT NO.
Detroit Edison	Fermi 3 COL Application	147483

PROJECT LOCATION	COORDINATES	GROUND ELEVATION (DATUM)	TOTAL DEPTH
Monroe, MI	N 6273.2' E 4606.0'	580.6 ft (NAVD 88)	274.0 (feet)

SURFACE CONDITIONS	COORDINATE SYSTEM	DATE START	DATE FINISHED
Gravel parking lot	Plant	06/13/07	08/01/07

LOGGED BY	CHECKED BY	APPROVED BY
Grainger/Bonnie/Mass	Dogbey/Mass	Meyer

SAMPLING: SAMPLE TYPE	SAMPLE NUMBER	SET 6 INCHES	2ND 6 INCHES	3RD 6 INCHES	N VALUE	SAMPLE RECOVERY	CORING: CORE SIZE	RUN NUMBER	RUN LENGTH	RUN RECOVERY	RQD RECOVERY	PERCENT RECOVERY	RQD	DEPTH (FEET)	ELEVATION (FEET)	CLASSIFICATION OF MATERIALS	REMARKS
S	8					4.5								30	550	30.0 DOLOMITE; dark gray; micritic (crystalline); fresh; very strong; very hard; w/stylolites; (Bass Islands Group).	(caved material contains gabbro gravel). Below 29.0' continued w/4" ID sonic continuous sampler w/ nominal 6" temporary steel casing advanced w/sampler.
														31	549		
														32	548		
														33	547		
S	9					2.0				33.5				34	546		Set nominal 6" temporary steel casing to 33.5'. Water level @ 12.2' prior to drilling on 06/26/07.
														35	545	35.5	
HQ	1	3.0	3.0	0.4	100	13				35.5				36	544	DOLOMITE; argillaceous; gray; micritic; fresh; very strong; very hard; w/few shale partings and stylolites; partings 0.1" thick; (Bass Islands Group). highly fractured @ 35.5-35.9' 80°,J,No,No,Ir,SR @ 36.0-36.7' shale partings - 0°,B,Pl,SR @ 36.2', 36.5', 36.8', 37.0', 37.2', 37.5', 38.1' 90°,J,No,No,Pl,SR @ 37.0-37.3' 80°,J,No,No,Pl,SR @ 37.3-37.8' 10°,J,Cl,Pl,SR @ 37.3' vuggy @ 37.9-38.1' 90°,J,Ca,Pa,WA,SR @ 38.2-38.8' 80°,J,Ca,Pa,Pl,SR @ 38.5-39.0' 80°,J,Ca,Pa,Pl,SR @ 39.1-39.4' 90°,J,Ca,Pa,Pl,SR @ 39.4-39.6' very closely spaced stylolites @ 39.6-39.7' 90°,J,T,Ca,Pa,Pl @ 39.7-40.1'	Sonic cores S-8 & S-9 stored in box labeled S1. Set nominal 6" temporary steel casing to 35.5'. Below 35.5' continued w/ triple tube wire line core barrel w/diamond bit using water as drilling fluid. Water level @ 15.8' prior to drilling on 07/28/07. Core box #1 starts @ 35.5'.
														37	543		
														38	542		
HQ	2	5.0	5.0	1.8	100	36				38.5				39	541		
														40	540		
														41	539	39.8 DOLOMITE; argillaceous; light brownish gray, banded; micritic to very fine grained; fresh; very strong; hard; (Bass Islands Group). 80°,J,Ca,Pa,Pl,SR @ 40.5-40.9' highly fractured @ 40.9-41.8'	
														42	538	41.0 DOLOMITE; argillaceous; grayish brown & gray, banded; micritic to very fine grained; fresh; very strong; hard; w/zones of very closely spaced stylolites; (Bass Islands Group). 90°,J,Ca,Pa,Pl,SR @ 41.5-42.2' 90°,J,No,No,Pl,SR @ 42.6-42.8' 0°,B,No,No,Pl,SR @ 42.8', 42.9', 43.2',43.3',43.4' light gray; pitted/vuggy; pits/vugs 0.04-0.4"; vugs filled w/anhydrite and calcite @ 43.8-44.5' 0°,J,No,No,Pl,SR @ 44.4', 44.5' brecciated (healed) @ 44.5-44.8'	
														43	537		
										43.5				44	536		
														45			

BLACK & VEATCH

BORING LOG

BORING NO. RB-C3

CLIENT	PROJECT	PROJECT NO.
Detroit Edison	Fermi 3 COL Application	147483

PROJECT LOCATION	COORDINATES	GROUND ELEVATION (DATUM)	TOTAL DEPTH
Monroe, MI	N 6273.2' E 4606.0'	580.6 ft (NAVD 88)	274.0 (feet)

SURFACE CONDITIONS	COORDINATE SYSTEM	DATE START	DATE FINISHED
Gravel parking lot	Plant	06/13/07	08/01/07

LOGGED BY	CHECKED BY	APPROVED BY
Grainger/Bonnie/Mass	Dogbey/Mass	Meyer

SAMPLING: SAMPLE TYPE	SAMPLE NUMBER	SET 6 INCHES	2ND 6 INCHES	3RD 6 INCHES	N VALUE	SAMPLE RECOVERY

CORING: CORE SIZE	RUN NUMBER	RUN LENGTH	RUN RECOVERY	RQD RECOVERY	PERCENT RECOVERY	RQD
HQ	3	5.2	5.2	2.5	100	48
HQ	4	5.3	5.3	3.4	100	64
HQ	5	5.0	5.0	2.0	100	40

48.7

54.0

59.0

DEPTH (FEET)	SAMPLE TYPE	ELEVATION (FEET)	GRAPHIC LOG	CLASSIFICATION OF MATERIALS	REMARKS
45		535		20°,J,No,No,Pl,SR @ 44.8' highly fractured @ 45.2-45.4'	
				-45.6-	
46		534		DOLOMITE; gray, mottled; pitted/vuggy; micritic; slightly weathered; very strong; very hard; pits/vugs 0.2-0.4"; vugs filled w/calcite & anhydrite; (Bass Islands Group). 60°,J,No,No,St,R @ 46.4-46.5'	
47				-46.8-	
		533		DOLOMITE; argillaceous; dark grayish brown & dark gray, banded; pitted/vuggy; micritic; fresh to slightly weathered; very strong; very hard; pits/vugs 0.04-0.4"; vugs occur in beds; w/black; very fine grained; fresh; strong; hard; shale partings and stylolites; thickest parting (0.1") @ 47.7'; (Bass Islands Group). highly fractured @ 46.8-47.0',47.3-47.4' shale partings - 0°,B,Pl,St,SR @ 47.2', 47.7', 48.5', 48.9' 70°,J,T,Ir @ 48.2-48.9' 100°,J,anhydrite,Pa,Pl,SR @ 48.7-49.1' highly fractured @ 49.1-49.4', 50.1-50.6' 40°,J,Ca,Pa,Pl,Slk @ 49.3-49.4' 30°,J,Cl,Pa,Pl,SR @ 49.9-50.0' shale; black; platy; very fine grained; fresh; strong; hard @ 50.1-50.2' brecciated (not healed) @ 50.1-50.9' 0.8" vug @ 51.1-51.2' 0°,J,No,No,Pl,SR @ 51.8-52.7' few vugs @ 52.0'	Core box #2 starts @ 48.5'.
48		532			
49		531			
50		530			
51		529			
52		528			
53		527		20°,J,No,No,Pl,SR @ 53.3', 55.6'	
				-53.5-	
54		526		DOLOMITE; light brownish gray; micritic to very fine grained; fresh; strong; hard; w/few vugs (about 0.4-0.8") & very closely spaced stylolites; (possibly oolitic); (Bass Islands Group). 0°,J,No,No,Pl,SR @ 54.7',54.9' highly fractured @ 55.1-55.3', 56.2-56.4'	
55		525			
56		524		60°,J,No,No,Pl,SR @ 56.0-56.2' brecciated (healed) @ 56.2-57.0'	
				-56.3-	
57		523		DOLOMITE; argillaceous; grayish brown & very dark grayish brown, banded; pitted/vuggy; micritic; fresh to slightly weathered; very strong; very hard; w/stylolites; (Bass Islands Group). 50°,J,No,No,Ir,SR @ 57.3-57.4' 70°,J,No,No,Pl,SR @ 57.7-57.8' 70°,J,No,No,Pl,SR @ 58.0-58.3' 0°,B,T,Pl,SR @ 58.2-58.3' highly fractured @ 58.4-58.5', 58.9-59.0' 90°,J,No,No,Pl,SR @ 58.5-58.9' 80°,J,No,No,Pl,SR @ 58.5-58.9' shale band; very dark gray; platy; very fine grained;	
58		522			
59		521			
60					

BLACK & VEATCH

BORING LOG

BORING NO. RB-C3

CLIENT	PROJECT	PROJECT NO.
Detroit Edison	Fermi 3 COL Application	147483

PROJECT LOCATION	COORDINATES	GROUND ELEVATION (DATUM)	TOTAL DEPTH
Monroe, MI	N 6273.2' E 4606.0'	580.6 ft (NAVD 88)	274.0 (feet)

SURFACE CONDITIONS	COORDINATE SYSTEM	DATE START	DATE FINISHED
Gravel parking lot	Plant	06/13/07	08/01/07

LOGGED BY	CHECKED BY	APPROVED BY
Grainger/Bonnie/Mass	Dogbey/Mass	Meyer

SAMPLING: SAMPLE TYPE	SAMPLE NUMBER	SET 6 INCHES	2ND 6 INCHES	3RD 6 INCHES	N VALUE	SAMPLE RECOVERY	CORING: CORE SIZE	RUN NUMBER	RUN LENGTH	RUN RECOVERY	RQD RECOVERY	PERCENT RECOVERY	RQD	DEPTH (FEET)	SAMPLE TYPE	ELEVATION (FEET)	GRAPHIC LOG	CLASSIFICATION OF MATERIALS	REMARKS
							HQ	6	5.0	5.0	3.6	100	72	60		520		fresh; strong; hard @ 59.0-59.2' dolomite & shale; dolomitic; white & gray, mottled; micritic to very fine grained; fresh; very strong; very hard @ 59.2-59.4'	
																		59.4 DOLOMITE; oolitic; light brownish gray; medium to coarse grained (crystalline); fresh; very strong; very hard; oolites 0.02-0.04"; (Bass Islands Group). 10°,B/J,No,No,Pl,SR @ 60.5' 40°,J,No,No,Pl,R @ 61.5-61.7'	Core box #3 starts @ 61.5'.
														61		519			
														62		518			
																		62.7 DOLOMITE & SHALE; dolomitic; white & gray, mottled; micritic to very fine grained; fresh; very strong; very hard; (Bass Islands Group). highly fractured @ 63.0-63.4' shale; very dark gray; fissile; very fine grained; fresh; strong; hard @ 63.3-63.5'	
														63		517			
										64.0				64		516		63.7 DOLOMITE; light gray, gray, & dark gray, banded; micritic; fresh; very strong; very hard; w/convoluted, wavy shale partings & bands, & stylolites; thickest shale band (0.4") @ 65.6'; (Bass Islands Group). shale parting - 10°,B,Pl,SR @ 63.7'	
														65		515			
														66		514		66.0 DOLOMITE; light gray, gray, & greenish gray, banded; micritic; fresh; very strong; very hard; w/ horizontal bands; (Bass Islands Group).	
							HQ	7	5.0	4.9	4.4	98	88	67		513		0°,B,Cl/Ca,Fi,Pl,S @ 67.4', 67.8', 68.0', 68.2'	
														68		512			
										69.0				69		511		highly fractured @ 69.4-69.5',70.2-70.4' shale parting - 10°,B,Pl,SR @ 69.6'	
														70		510		70.5 DOLOMITE; brecciated (healed); light brownish gray; vuggy; micritic; slightly weathered; very strong; hard; w/very dark gray; fresh; moderately strong; hard; convoluted lenses, partings & bands of shale; brecciated (healed) fragments subangular to subrounded, up to 6" diameter; vugs spherical to elongate, 0.04-0.4"; few filled w/anhydrite; (Bass Islands Group). brecciated, healed w/shale & dolomite @ 70.5-72.5'	
							HQ	8	5.0	5.0	3.2	100	64	71		509			
														72		508		highly fractured @ 73.3-73.4', 73.8-74.0' 30°,J,Cl,Pa,Ir,R @ 73.3-73.4' 30°,J,No,No,Pl,R @ 73.5-73.6' 50°,J,Cl,Pa,Pl,SR @ 74.0-74.1' 120°,J,Cl,Pa,Pl,SR @ 74.0-74.1'	
														73		507			
										74.0				74		506			
														75					

BLACK & VEATCH

BORING LOG

BORING NO. RB-C3

CLIENT	PROJECT	PROJECT NO.
Detroit Edison	Fermi 3 COL Application	147483

PROJECT LOCATION	COORDINATES	GROUND ELEVATION (DATUM)	TOTAL DEPTH
Monroe, MI	N 6273.2' E 4606.0'	580.6 ft (NAVD 88)	274.0 (feet)

SURFACE CONDITIONS	COORDINATE SYSTEM	DATE START	DATE FINISHED
Gravel parking lot	Plant	06/13/07	08/01/07

LOGGED BY	CHECKED BY	APPROVED BY
TB for Grainger/Bonnie/Mass	TB for Dogbey/Mass	Meyer

SAMPLING: SAMPLE TYPE	SAMPLE NUMBER	SET 6 INCHES	2ND 6 INCHES	3RD 6 INCHES	N VALUE	SAMPLE RECOVERY

CORING: CORE SIZE	RUN NUMBER	RUN LENGTH	RUN RECOVERY	RQD RECOVERY	PERCENT RECOVERY	RQD
HQ	9	5.0	5.0	4.9	100	98
HQ	10	5.0	5.0	5.0	100	100
HQ	11	5.0	5.0	1.8	100	36

DEPTH (FEET)	ELEVATION (FEET)	CLASSIFICATION OF MATERIALS	REMARKS
75	505	0°,J,T,No,No,Ir,R @ 75.7'	Core box #4 starts @ 75.7'.
76	504	0°,J,No,No,Ir,R @ 76.2'	Partial loss of drilling fluid @ 76.5'.
77	503		
78	502		
79	501		
80	500	closely spaced stylolites @ 80.7'	
81	499		
82	498		
83	497	83.1 DOLOMITE; gray & light brownish gray, banded; very fine grained (crystalline); fresh; very strong; hard; w/ stylolites; (Bass Islands Group).	
84	496	0°,J,Cl,Fi,Pl,SR @ 84.5' 20°,J,Cl,Fi,Pl,SR @ 84.5-84.6' lean clay band - about 100% medium plasticity, medium toughness, no dilatancy, high dry strength fines; greenish gray; moist; weak reaction w/HCl; homogeneous @ 84.5-84.6'	
85	495	85.1 DOLOMITE; brecciated (healed); argillaceous; gray; pitted; micritic; fresh to slightly weathered; strong; hard; pits 0.04-0.16", some filled w/calcite & anhydrite; (Bass Islands Group).	
86	494	86.0 DOLOMITE & SHALE; dolomitic; gray, mottled; micritic to very fine grained; fresh; very strong; very hard; (Bass Islands Group). shale band; dark gray; very fine grained; fresh; strong; hard @ 87.0-87.1'	
87	493	grades w/shale partings @ 87.1'	
88	492	87.3 DOLOMITE; argillaceous; light olive brown & gray; micritic fresh; strong; hard; w/zones of very closely	Core box #5 starts @ 89.0'.
89	491		
90			

BLACK & VEATCH

BORING LOG

BORING NO. RB-C3

CLIENT	PROJECT	PROJECT NO.
Detroit Edison	Fermi 3 COL Application	147483

PROJECT LOCATION	COORDINATES	GROUND ELEVATION (DATUM)	TOTAL DEPTH
Monroe, MI	N 6273.2' E 4606.0'	580.6 ft (NAVD 88)	274.0 (feet)

SURFACE CONDITIONS	COORDINATE SYSTEM	DATE START	DATE FINISHED
Gravel parking lot	Plant	06/13/07	08/01/07

LOGGED BY Grainger/Bonnie/Mass | CHECKED BY Dogbey/Mass | APPROVED BY Meyer

SAMPLING: SAMPLE TYPE	SAMPLE NUMBER	SET 6 INCHES	2ND 6 INCHES	3RD 6 INCHES	N VALUE	SAMPLE RECOVERY

CORING: CORE SIZE	RUN NUMBER	RUN LENGTH	RUN RECOVERY	RQD RECOVERY	PERCENT RECOVERY	RQD
HQ	12	5.0	5.0	4.4	100	88
HQ	13	5.0	5.0	3.4	100	68
HQ	14	5.0	5.0	3.7	100	74

DEPTH (FEET)	SAMPLE TYPE	ELEVATION (FEET)	GRAPHIC LOG	CLASSIFICATION OF MATERIALS	REMARKS
90		490		spaced stylolites (7" apart); (Bass Islands Group).	
				highly fractured @ 87.4-87.9'	
				90°,J,Ca,Pa,Pl,SR @ 87.4-87.9' (2)	
91				0°,J,No,No,Pl,SR @ 88.3'	
		489		20°,J,Cl,Fi,Pl,S @ 88.7'	
				vuggy @ 89.4-89.8'	
				brecciated (healed) @ 89.8-90.3'	
92				highly fractured @ 91.7-92.0'	
		488		90°,J,T,Pl @ 92.0-92.5' (many)	
93					
		487		30°,J,Cl,Fi,Pl,SR @ 93.4-93.5'	
				0°,J,Cl,Fi,Pl,SR @ 93.4'	
94				0° & 30° joints filled w/clay & highly fractured dolomite @ 93.4-93.5'	
		486			
				20°,J,No,No,Pl,SR @ 94.8'	
95				shale lenses in dolomite matrix, some fractures healed @ 95.0-96.3'	
		485			
96					
		484		shale parting - 0°,B,WA,SR @ 96.4'	
				96.5	
97				DOLOMITE; argillaceous; light brownish gray; micritic; fresh; very strong; hard; w/very closely spaced, black shale partings; (Bass Islands Group).	
		483		shale; black; very fine grained; fresh; strong; hard @ 96.7-96.8'	
98				90°,J,No,No,WA,SR @ 96.8-97.0'	
		482		90°,J,Cl,Fi,WA,SR @ 96.8-97.7'	
				90°,J,No,No,Pl,SR @ 97.9-98.0', 100.5-100.7'	
99					No drilling fluid return @ 99.0'.
		481		0°,B,Cl,Fi,Pl,SR @ 99.2', 99.4'	
				60°,J,No,No,Pl,SR @ 99.4-99.6'	
100					
		480		10°,B/J,No,No,Pl,S @ 100.5', 100.6', 100.7'	
101				mottled; convoluted bands @ 100.7-101.7'	
		479		highly fractured @ 101.6-101.7'	
				101.8	
102				DOLOMITE; olive gray & grayish brown, banded; micritic; fresh; strong; hard; w/stylolites; (Bass Islands Group).	
		478		0°,B,No,No,Pl,SR @ 101.9'	Core box #6 starts @ 102.8'.
103				10°,B,UK,Fi,Pl,SR @ 102.7'	
		477		very closely spaced stylolites @ 102.7'	
				grades light brownish gray @ 103.8'	
104		476			
				highly fractured @ 104.6', 105.1-105.2'	
105					

94.0 | 99.0 | 104.0

BLACK & VEATCH

BORING LOG

BORING NO. RB-C3

CLIENT	PROJECT	PROJECT NO.
Detroit Edison	Fermi 3 COL Application	147483

PROJECT LOCATION	COORDINATES	GROUND ELEVATION (DATUM)	TOTAL DEPTH
Monroe, MI	N 6273.2' E 4606.0'	580.6 ft (NAVD 88)	274.0 (feet)

SURFACE CONDITIONS	COORDINATE SYSTEM	DATE START	DATE FINISHED
Gravel parking lot	Plant	06/13/07	08/01/07

LOGGED BY	CHECKED BY	APPROVED BY
Grainger/Bonnie/Mass	Dogbey/Mass	Meyer

SAMPLING: SAMPLE TYPE	SAMPLE NUMBER	SET 6 INCHES	2ND 6 INCHES	3RD 6 INCHES	N VALUE	SAMPLE RECOVERY

CORING: CORE SIZE	RUN NUMBER	RUN LENGTH	RUN RECOVERY	RQD RECOVERY	PERCENT RECOVERY	RQD
HQ	15	5.0	5.0	2.8	100	56
HQ	16	5.0	4.8	2.9	96	58
HQ	17	5.0	4.7	1.3	94	26

DEPTH (FEET)	SAMPLE TYPE	ELEVATION (FEET)	GRAPHIC LOG	CLASSIFICATION OF MATERIALS	REMARKS
105		475		90°,J,No,No,Pl,SR @ 105.4-105.6'	
				lean clay band - medium plasticity, medium toughness, no dilatancy fines; dark gray; moist; strong reaction w/HCl; homogeneous @ 105.6-105.7'	
106		474			
107		473		90°,J,No,No,Pl,SR @ 107.1-107.2'	
				highly fractured @ 107.1-109.0'	
				shale parting - 0°,B,Pl,SR @ 107.1'	
				20°,J,No,No,Pl,SR @ 107.5'	
108		472		70°,J,Ca,Fi,Pl,SR @ 107.5-107.7', 107.7-107.9'	
				80°,J,No,No,WA,SR @ 107.7-108.6' (3)	
109		471		30°,J,Cl,Pa,Pl,SR @ 109.5'	
				90°,J,Cl,Fi,Pl,SR @ 109.9-110.1'	
110		470		0°,B,Cl,Pa,Pl,SR @ 109.9'	
				highly fractured @ 110.1-110.3'	
				110.3	
111		469		DOLOMITE; argillaceous; grayish brown; pitted; very fine grained (crystalline); fresh to slightly weathered; strong; hard; w/stylolites; pits 0.004-0.12"; (Bass Islands Group).	
				90°,J,No,No,Pl,SR @ 110.3-110.8', 110.6-111.1'	
112		468		20°,J,Cl,Pa,Pl,SR @ 110.8'	
				80°,J,No,No,Pl,SR @ 110.8-112.2'	
113		467		very closely spaced stylolites @ 111.1',111.6',112.6'	
				0°,B,UK,Fi,Pl,SR @ 111.1'	
114		466		60°,J,Cl,Pa,Pl,SR @ 113.5-113.8'	Core loss @ 113.8-114.0'.
				very pale brown @ 114.0-115.0'	
115		465		50°,J,Ca,Pa,Pl,R @ 114.0-114.1'	
				0°,J/B,anhydrite,Fi,Pl,SR @ 115.6'	
116		464		joint filled w/large (~ 0.8") anhydrite crystals	Core box #7 starts @ 116.1'.
				highly fractured @ 115.6-115.8', 116.8-117.5', 118.2-118.7'	
117		463		very strong; very hard @ 115.8-116.8'	
				0°,B,Cl,Fi,Pl,SR @ 116.1'	
				40°,J,Ca,Pa,Pl,SR @ 116.3'	
118		462		fat clay band - about 100% high plasticity, medium toughness, no dilatancy, very high dry strength fines; greenish gray; moist; weak reaction w/HCl; homogeneous @ 116.5-116.8'	
				30°,J,Ca,Fi,Pl,SR @ 117.5'	
119		461		gray & light brownish gray, mottled @ 117.5-119.0'	Core loss @ 118.7-121.6'.
120				80°,J,Cl,Pa,Pl,R @ 117.5-118.2'	

109.0 114.0 119.0

BLACK & VEATCH

BORING LOG

BORING NO. RB-C3
SHEET 9 OF 19

CLIENT	PROJECT	PROJECT NO.
Detroit Edison	Fermi 3 COL Application	147483

PROJECT LOCATION	COORDINATES	GROUND ELEVATION (DATUM)	TOTAL DEPTH
Monroe, MI	N 6273.2' E 4606.0'	580.6 ft (NAVD 88)	274.0 (feet)

SURFACE CONDITIONS	COORDINATE SYSTEM	DATE START	DATE FINISHED
Gravel parking lot	Plant	06/13/07	08/01/07

LOGGED BY	CHECKED BY	APPROVED BY
TB for TB for TB for Grainger/Bonnie/Mass	EM for TB for Dogbey/Mass	EM Meyer

SAMPLING							CORING							DEPTH (FEET)	SAMPLE TYPE	ELEVATION (FEET)	GRAPHIC LOG	CLASSIFICATION OF MATERIALS	REMARKS
SAMPLE TYPE	SAMPLE NUMBER	SET 6 INCHES	2ND 6 INCHES	3RD 6 INCHES	N VALUE	SAMPLE RECOVERY	CORE SIZE	RUN NUMBER	RUN LENGTH	RUN RECOVERY	RQD RECOVERY	PERCENT RECOVERY	RQD						
							HQ	18	5.0	2.4	0.0	48	0	120		460			
														121					
																459		121.6	
														122		458		DOLOMITE & SHALE; dolomitic; dark greenish gray & gray, banded; micritic to very fine grained; fresh; very strong; hard; (Salina Group - Unit F). highly fractured @ 121.6-122.1', 122.7-123.0'	
														123		457		80°,J,No,No,Pl,SR @ 123.0-123.4' 0°,J/B,No,No,Pl,SR @ 123.2' 0°,B,Cl,Fi,Pl,SR @ 123.4' 60°,J,No,No,Pl,SR @ 123.5-123.7' 90°,J,No,No,Pl,SR @ 123.8-124.0'	
										124.0				124		456			Core loss @ 124.0-127.2'.
							HQ	19	5.0	1.6	0.0	32	0	125		455			
														126		454			
														127		453		highly fractured; some clasts contain large (~ 0.8") anhydrite crystals & calcite filled joints @ 127.0-128.2' brecciated; light gray; w/lenses of white; micritic (crystalline); fresh; strong; hard; anhydrite @ 128.2-130.5' 80°,J,anhydrite,Pa,Pl,SR @ 128.2-128.5'	
														128		452			
										129.0				129		451			Core loss @ 129.0-130.0'.
							HQ	20	2.5	1.5	0.0	60	0	130		450		highly fractured @ 130.0-130.4', 130.6-131.1' 90°,J,No,No,Pl,SR @ 130.4-130.6' grades gray @ 130.5'	
														131		449			Core loss @ 131.5-132.5'.
										131.5				132		448			
							HQ	21	2.5	1.5	0.0	60	0	133		447		132.9 LIMESTONE; argillaceous; dark greenish gray; pitted; very fine grained (crystalline); slightly to moderately weathered; strong; moderately hard to hard; thin bedded; w/clay partings; medium plasticity, medium toughness, no dilatancy fines; gray; moist; strong reaction w/HCl; homogeneous; (Salina Group - Unit F).	
										134.0				134		446			
														135					

7/17/2008 8:39 AM DTE - Fermi 3 Geotech

BLACK & VEATCH

BORING LOG

BORING NO. RB-C3

CLIENT	PROJECT	PROJECT NO.
Detroit Edison	Fermi 3 COL Application	147483

PROJECT LOCATION	COORDINATES	GROUND ELEVATION (DATUM)	TOTAL DEPTH
Monroe, MI	N 6273.2' E 4606.0'	580.6 ft (NAVD 88)	274.0 (feet)

SURFACE CONDITIONS	COORDINATE SYSTEM	DATE START	DATE FINISHED
Gravel parking lot	Plant	06/13/07	08/01/07

LOGGED BY	CHECKED BY	APPROVED BY
Granger/Bonnie/Mass	Dogbey/Mass	Meyer

SAMPLING							CORING									
SAMPLE TYPE	SAMPLE NUMBER	SET 6 INCHES	2ND 6 INCHES	3RD 6 INCHES	N VALUE	SAMPLE RECOVERY	CORE SIZE	RUN NUMBER	RUN LENGTH	RUN RECOVERY	RQD RECOVERY	PERCENT RECOVERY	RQD	DEPTH (FEET)	SAMPLE TYPE	ELEVATION (FEET)	GRAPHIC LOG	CLASSIFICATION OF MATERIALS	REMARKS
							HQ	22	2.0	1.5	0.0	75	0	135		445		135.0 CLAYSTONE; dolomitic; greenish gray; very fine grained; moderately weathered; moderately strong; moderately hard; w/areas of weak, low hardness; (Salina Group - Unit F). highly fractured @ 135.5-136.0'	
			136.0				HQ	23	3.0	1.1	0.0	37	0	136		444			Core barrel jammed @ 136.0'. Core loss throughout @ 136.0-139.0'.
														137		443		argillaceous dolomite fragments ; gray; micritic; fresh; strong; hard @ 137.2-137.3'	
														138		442			
			139.0											139		441		argillaceous dolomite fragments @ 139.0-139.6'	Core loss @ 139.0-139.6'.
							HQ	24	2.5	1.9	0.4	76	16	140		440		140.0 CLAYSTONE & LIMESTONE; CLAYSTONE: dolomitic; very dark greenish gray; moderately weathered; moderately strong; moderately hard; LIMESTONE: shaley; very dark gray; fissile to massive; slightly to moderately weathered; strong; hard; thin bedded; w/calcite & trace pyrite filling/ healing of fractures, pits, & vugs; (Salina Group - Unit F).	
			141.5											141		439			Core box #8 starts @ 141.5'. Core loss throughout @ 141.5-149.0'.
							HQ	25	2.5	1.5	0.0	60	0	142		438		142.0 DOLOMITE; argillaceous; gray; micritic; fresh; very strong; hard; highly fractured; (Salina Group - Unit F).	
														143		437		143.5 CLAYSTONE & LIMESTONE; CLAYSTONE: dolomitic; very dark greenish gray; moderately weathered; moderately strong; moderately hard; LIMESTONE: shaley; very dark gray; fissile to massive; slightly to moderately weathered; strong; hard; thin bedded; w/calcite & trace pyrite filling/ healing of fractures, pits, & vugs; (Salina Group - Unit F).	
			144.0				HQ	26	2.5	1.0	0.0	40	0	144		436			
														145		435		dolomite fragments; argillaceous; dark bluish gray; very fine grained; fresh; strong; hard @ 145.7-146.7'	
														146		434			
			146.5				HQ	27	2.5	1.7	0.0	68	0	147		433		147.0 CLAYSTONE; dolomitic; brecciated (not healed); gray; moderately to highly weathered; very weak to weak; low hardness to friable; slight hydrocarbon odor; properties comparable to low plasticity, low toughness, slow dilatancy to rapid dilatancy soil fines; (Salina Group - Unit F). highly fractured @ 147.8-149.0'	
														148		432			
			149.0											149		431		moderately weathered; moderately strong; moderately hard @ 148.3-148.4' highly weathered; weak; low hardness @ 148.7-	
														150					

BLACK & VEATCH

BORING LOG

BORING NO. RB-C3
SHEET 11 OF 19

CLIENT	PROJECT	PROJECT NO.
Detroit Edison	Fermi 3 COL Application	147483

PROJECT LOCATION	COORDINATES	GROUND ELEVATION (DATUM)	TOTAL DEPTH
Monroe, MI	N 6273.2' E 4606.0'	580.6 ft (NAVD 88)	274.0 (feet)

SURFACE CONDITIONS	COORDINATE SYSTEM	DATE START	DATE FINISHED
Gravel parking lot	Plant	06/13/07	08/01/07

LOGGED BY	CHECKED BY	APPROVED BY
GCO for TB TB for Grainger/Bonnie/Mass	EM for TB for Dogbey/Mass	fm Meyer

SAMPLING							CORING							DEPTH (FEET)	SAMPLE TYPE	ELEVATION (FEET)	GRAPHIC LOG	CLASSIFICATION OF MATERIALS	REMARKS
SAMPLE TYPE	SAMPLE NUMBER	SET 6 INCHES	2ND 6 INCHES	3RD 6 INCHES	N VALUE	SAMPLE RECOVERY	CORE SIZE	RUN NUMBER	RUN LENGTH	RUN RECOVERY	RQD RECOVERY	PERCENT RECOVERY	RQD						
							HQ	28	2.5	2.5	2.0	100	80	150				148.9' 60°,J,No,No,Pl,SR @ 148.9-149.1'	Discrete sample 8-A collected @ 149.9-151.3'.
														151		430		149.0 CLAYSTONE; dolomitic; light greenish gray; very fine grained; moderately weathered; moderately strong; moderately hard; (Salina Group - Unit F). 10°,B/J,No,No,St,R @ 151.3' grades greenish gray @ 151.3'	
							HQ	29	2.5	151.5 1.0	0.5	40	20	152		429		152.2 DOLOMITE; argillaceous; & SHALE; dolomitic; greenish gray & very dark gray, banded; pitted; micritic to very fine grained; slightly weathered; strong; hard; banded to thin bedded; wavy bedding; (Salina Group - Unit F). 20°,J,No,No,Pl,SR @ 152.6-152.7' highly fractured @ 154.0-154.3',154.5-154.7', 154.9-155.1',155.4-155.6',155.9-156.0'	
														153		428			
														154		427			
							HQ	30	2.5	154.0 2.5	0.5	100	20	155		426		100°,J,No,No,Pl,SR @ 155.7-155.9' 80°,J,No,No,WA,SR @ 155.7-155.9'	
														156		425			
							HQ	31	2.5	156.5 1.2	0.0	48	0	157		424		90°,J,Ca,Fi,Pl,SR @ 157.2-157.5', 157.9-158.1' 90°,J,No,No,Pl,SR @ 157.2-157.5' light greenish gray and very dark gray @ about 157.2-158.4'	Core loss throughout @ 156.5-159.0'.
														158		423			
														159		422			
							HQ	32	2.5	159.0 2.5	0.0	100	0	160		421		highly fractured; w/many joints oriented @ 70°,J,No, No,Pl,SR @ 159.8-160.5'	
														161		420		40°,J,Cl,Fi,Pl,SR @ 160.9-161.0'	
							HQ	33	2.5	161.5 2.5	0.8	100	32	162		419			Discrete sample 8-B collected @ 161.9-162.8'.
														163		418		Breccia - dolomite clasts in a indurated claystone matrix: claystone matrix; dolomitic; greenish gray; micritic; slightly weathered; moderately strong; moderately hard; w/angular clasts of dolomite; argillaceous; dark gray; micritic; slightly weathered; moderately strong; moderately hard @ 163.0-163.4'	
														164		417			Core box #9 starts @ 164.0'. Core loss @
										164.0				165		416			

BLACK & VEATCH

BORING LOG

BORING NO. RB-C3

CLIENT	PROJECT	PROJECT NO.
Detroit Edison	Fermi 3 COL Application	147483

PROJECT LOCATION	COORDINATES	GROUND ELEVATION (DATUM)	TOTAL DEPTH
Monroe, MI	N 6273.2' E 4606.0'	580.6 ft (NAVD 88)	274.0 (feet)

SURFACE CONDITIONS	COORDINATE SYSTEM	DATE START	DATE FINISHED
Gravel parking lot	Plant	06/13/07	08/01/07

LOGGED BY	CHECKED BY	APPROVED BY
Grainger/Bonnie/Mass	Dogbey/Mass	Meyer

SAMPLING: SAMPLE TYPE	SAMPLE NUMBER	SET 6 INCHES	2ND 6 INCHES	3RD 6 INCHES	N VALUE	SAMPLE RECOVERY

CORING: CORE SIZE	RUN NUMBER	RUN LENGTH	RUN RECOVERY	RQD RECOVERY	PERCENT RECOVERY	RQD
HQ	34	5.0	3.8	1.5	76	30
HQ	35	5.0	0.0	0.0	0	0
HQ	36	2.5	1.0	0.4	40	16
HQ	37	2.5	0.5	0.0	20	0

DEPTH (FEET)	ELEVATION (FEET)	CLASSIFICATION OF MATERIALS	REMARKS
165	415		164.0-164.7'.
		—165.4—	
166	414	LIMESTONE & DOLOMITE; argillaceous; gray; interbedded; micritic; slightly weathered; moderately strong; moderately hard; thin bedded w/shale bands; (Salina Group - Unit F).	Discrete sample 9-A collected @ 166.2-166.8'.
167	413	—167.3—	
		DOLOMITE; argillaceous; banded; greenish gray; micritic; slightly weathered; strong; hard; w/very dark gray shale partings & bands; (Salina Group - Unit F).	
168	412	shale band; very dark gray; very fine grained; slightly weathered; moderately strong; moderately hard @ 167.5-167.6'	Core loss throughout @ 168.5-184.5'.
169	411	169.0 highly fractured @ 167.6-168.5'	
170	410		
171	409		
172	408		
173	407		
174	406	174.0	
		—174.7—	
175	405	DOLOMITE & CLAYSTONE; dolomitic; light greenish gray to very dark gray; pitted; micritic; slightly weathered; strong; hard; (Salina Group - Unit F).	
176	404	176.5	
177	403	dolomite fragments; argillaceous; dark gray; micritic; fresh; strong; hard @ 177.5-177.7'	
178	402	claystone; brecciated (not healed); very dark greenish gray; highly weathered; weak, low hardness; properties comparable to high plasticity, low toughness, no dilatancy soil fines; moist @ 177.7-178.0'	
179	401	179.0	
		—179.8—	
180			

BLACK & VEATCH

BORING LOG

BORING NO. RB-C3

CLIENT	PROJECT	PROJECT NO.
Detroit Edison	Fermi 3 COL Application	147483

PROJECT LOCATION	COORDINATES	GROUND ELEVATION (DATUM)	TOTAL DEPTH
Monroe, MI	N 6273.2' E 4606.0'	580.6 ft (NAVD 88)	274.0 (feet)

SURFACE CONDITIONS	COORDINATE SYSTEM	DATE START	DATE FINISHED
Gravel parking lot	Plant	06/13/07	08/01/07

LOGGED BY	CHECKED BY	APPROVED BY
Grainger/Bonnie/Mass	Dogbey/Mass	Meyer

SAMPLING: SAMPLE TYPE	SAMPLE NUMBER	SET 6 INCHES	2ND 6 INCHES	3RD 6 INCHES	N VALUE	SAMPLE RECOVERY	CORING: CORE SIZE	RUN NUMBER	RUN LENGTH	RUN RECOVERY	RQD RECOVERY	PERCENT RECOVERY	RQD	DEPTH (FEET)	SAMPLE TYPE	ELEVATION (FEET)	GRAPHIC LOG	CLASSIFICATION OF MATERIALS	REMARKS
							HQ	38	2.5	0.8	0.0	32	0	180		400		BRECCIA - dolomite clasts in a poorly indurated claystone matrix: claystone matrix; dolomitic; gray; highly weathered; very weak; low hardness; w/clasts of dolomite; gray & light greenish gray; micritic; fresh; strong; hard; (Salinga Group - Unit F). 70°,J,Cl,Pa,Pl,SR @ about 180.4-180.6'	
														181					
										181.5						399			
																		180.6	
														182				DOLOMITE & CLAYSTONE; dolomitic; light greenish gray to very dark gray; pitted; micritic; slightly weathered; strong; hard; (Salina Group - Unit F). 40°,J,Cl,Pa,Pl,SR @ 182.4-183.5'	
							HQ	39	2.5	1.2	0.7	48	28			398			
														183					
																397		182.6	
																		BRECCIA - dolomite clasts in a indurated claystone matrix: claystone matrix; pale yellow to dark gray; very fine grained; slightly weathered; moderately strong; moderately hard; w/angular clasts of dolomite; light brownish gray; micritic; slightly weathered; strong; hard; (Salina Group - Unit F). 60°,J,N,Pl @ 183.0-183.1' 90°,J,N,Pl @ 183.1-183.3' 50°,J,N,Pl @ 183.3'	
										184.0				184					
							HQ	40	2.5	2.0	0.8	80	32			396			
														185					
																395		184.5	
														186				BRECCIA - dolomite clasts in a indurated claystone matrix: claystone matrix; greenish gray; moderately weathered; moderately strong; moderately hard; w/ angular clasts of dolomite; argillaceous; gray; micritic; fresh; strong; hard; w/calcite partings; (Salina Group - Unit F).	
										186.5						394			
							HQ	41	2.5	2.5	0.8	100	32	187					
																393		186.5	
														188				BRECCIA - dolomite clasts in a indurated claystone matrix: claystone matrix; dolomitic; dark greenish gray; moderately weathered; moderately strong; moderately hard; w/lenses of fine medium sand; w/ angular clasts of dolomite; some argillaceous; dark gray & grayish brown; micritic to very fine grained; fresh to slightly weathered; strong; hard; includes sand-, gravel-, and cobble-sized clasts; (Salina Group - Unit F). fissile @ 186.9-187.2' claystone band; dolomitic; gray; completely weathered; extremely weak; friable; properties comparable to low plasticity, low toughness, rapid dilatancy soil fines @ 189.4-189.5' dolomite; light brownish gray; micritic; fresh; strong; hard @ 190.0-190.3' claystone band; dolomitic; gray; highly weathered; very weak; low hardness; properties comparable to low plasticity, low toughness, slow dilatancy soil fines @ 190.4-190.6' greenish gray breccia fragments @ 190.6-191.4'	Core loss @ 189.0-189.2'
														189		392			
										189.0									
														190		391			
																390			
														191					
							HQ	42	5.0	4.8	2.2	96	44			389			Core box #10 starts @ 191.3'.
														192					
																388			
														193					
																387		193.8	
														194				DOLOMITE & LIMESTONE; light gray, banded; micritic; fresh; strong; hard; (Salina Group - Unit F). 0°,B,No,No,Pl,SR @ 194.1', 194.2'	
										194.0						386			
														195				194.8	

BLACK & VEATCH

BORING LOG

BORING NO. RB-C3

CLIENT	PROJECT	PROJECT NO.
Detroit Edison	Fermi 3 COL Application	147483

PROJECT LOCATION	COORDINATES	GROUND ELEVATION (DATUM)	TOTAL DEPTH
Monroe, MI	N 6273.2' E 4606.0'	580.6 ft (NAVD 88)	274.0 (feet)

SURFACE CONDITIONS	COORDINATE SYSTEM	DATE START	DATE FINISHED
Gravel parking lot	Plant	06/13/07	08/01/07

LOGGED BY	CHECKED BY	APPROVED BY
Grainger/Bonnie/Mass	Dogbey/Mass	Meyer

SAMPLING: SAMPLE TYPE	SAMPLE NUMBER	SET 6 INCHES	2ND 6 INCHES	3RD 6 INCHES	N VALUE	SAMPLE RECOVERY

CORING: CORE SIZE	RUN NUMBER	RUN LENGTH	RUN RECOVERY	RQD RECOVERY	PERCENT RECOVERY	RQD
HQ	43	5.0	4.6	2.4	92	48
HQ	44	3.0	2.5	0.6	83	20
HQ	45	2.0	2.0	0.8	100	40
HQ	46	1.5	1.5	0.8	100	53
HQ	47	3.5	3.5	1.6	100	46

DEPTH (FEET)	ELEVATION (FEET)	CLASSIFICATION OF MATERIALS	REMARKS
195	385	DOLOMITE; light brownish gray; micritic; fresh; very strong; very hard; w/fossils (ostracodes); (Salina Group - Unit F).	
196	384	20°,J,Cl,Pa,Pl,R @ 196.1' grades argillaceous; gray @ 196.1' 70°,J,VN,Ca,Fi,Pl @ 196.2-196.6'	
		196.6	
197	383	LIMESTONE; dark grayish brown & grayish brown; pitted/vuggy; very fine to fine grained (crystalline); slightly to moderately weathered; strong; hard; pits/ vugs 0.04-0.8"; irregular shape; many elongate; joints/vugs w/0.08" calcite crystals; (Salina Group - Unit F).	
198	382	dolomite; light brownish gray; micritic; fresh; very strong; very hard @ 196.9-197.3' 40°,J,Ca,Fi,Pl,SR @ 198.4-198.5'	
199	381	199.0	Water level @ 23.9' prior to drilling on 07/31/07.
200	380	70°,J,Ca,Fi,Ir,SR @ 199.8-200.1'	
201	379	20°,J,Ca/Cl,Pa,Pl,SR @ 200.8' 80°,J,Ca/Cl,Pa,Pl,SR @ 201.1' siltstone band; calcareous, gray, very fine grained, highly weathered, weak; low hardness; properties comparable to low plasticity, low toughness, slow dilatancy soil fines @ 201.3-201.4'	Core loss @ 201.4-202.0'.
202	378	202.0	Core barrel jammed @ 202.0'.
		201.9	
203	377	BRECCIA - claystone & dolomite clasts in a indurated limestone matrix: limestone matrix; argillaceous; gray; pitted/vuggy; micritic; slightly weathered; strong; moderately hard to hard; w/angular clasts of claystone & trace dolomite; dark gray & grayish brown; micritic; slightly weathered; strong; moderately hard to hard; (Salina Group - Unit F).	
204	376	204.0 50°,J,Cl,Pa,Pl,R @ 202.3-202.5'	
205	375	205.5 claystone parting; dolomitic; gray; highly weathered; weak; low hardness; properties comparable to low plasticity, low toughness, slow dilatancy soil fines @ 205.3-205.4'	Core box #11 starts @ 205.5'.
		205.4	
206	374	LIMESTONE; dark gray; pitted; micritic to very fine grained (crystalline); slightly to moderately weathered; strong; moderately hard to hard; pits 0.04-0.16", many elongate w/long axis parallel to bedding; calcite crystal growth in pits; (Salina Group - Unit F).	
207	373	90°,J,Ca,Fi,Pl,SR @ 206.8-207.2' argillaceous @ 207.6-207.8'	
		207.9	
208	372	BRECCIA - claystone & dolomite clasts in a indurated limestone matrix: limestone matrix; argillaceous; gray; pitted; micritic; slightly weathered; strong; moderately hard to hard; w/angular clasts of claystone & trace	
209	371	209.0	Core loss @ 209.0-210.0'.
210			

BLACK & VEATCH

BORING LOG

BORING NO. RB-C3

CLIENT	PROJECT	PROJECT NO.
Detroit Edison	Fermi 3 COL Application	147483

PROJECT LOCATION	COORDINATES	GROUND ELEVATION (DATUM)	TOTAL DEPTH
Monroe, MI	N 6273.2' E 4606.0'	580.6 ft (NAVD 88)	274.0 (feet)

SURFACE CONDITIONS	COORDINATE SYSTEM	DATE START	DATE FINISHED
Gravel parking lot	Plant	06/13/07	08/01/07

LOGGED BY	CHECKED BY	APPROVED BY
Grainger/Bonnie/Mass	Dogbey/Mass	Meyer

SAMPLING: SAMPLE TYPE	SAMPLE NUMBER	SET 6 INCHES	2ND 6 INCHES	3RD 6 INCHES	N VALUE	SAMPLE RECOVERY

CORING: CORE SIZE	RUN NUMBER	RUN LENGTH	RUN RECOVERY	RQD RECOVERY	PERCENT RECOVERY	RQD
HQ	48	5.0	4.0	0.5	80	10
HQ	49	5.0	4.8	1.6	96	32
HQ	50	5.0	4.4	1.0	88	20

DEPTH (FEET)	SAMPLE TYPE	ELEVATION (FEET)	GRAPHIC LOG	CLASSIFICATION OF MATERIALS	REMARKS
210		370		dolomite; dark gray & grayish brown; micritic; slightly weathered; strong; moderately hard to hard; (Salina Group - Unit F).	
				208.5	
211		369		LIMESTONE; dark gray; pitted; micritic to very fine grained (crystalline); slightly to moderately weathered; strong; moderately hard to hard; pits 0.04-0.16", many elongate w/long axis parallel to bedding; calcite crystal growth in pits; (Salina Group - Unit F).	
212		368		20°,J,N,Ca,Pa,Pl,SR @ 208.5'	
213		367		0°,B,Ca,Fi,Pl,SR @ 208.8'	
				210.1	
214		366		DOLOMITE; light gray; micritic; fresh; strong; hard; w/ fossils & very dark gray; micritic; fresh; strong; hard; lenses & thin partings of limestone; (Salina Group - Unit F).	
214.0				90°,J,VN,Ca,Fi,WA @ 210.3-211.7' (many)	Core loss @ 214.0-214.2'.
215		365		0°,B,No,No,Pl,SR @ 210.5', 211.6'	
216		364		fossils grade out @ 210.8'	
				limestone partings - 0°,B,Pl,SR @ 211.2', 213.0'	
				211.7	
217		363		LIMESTONE & DOLOMITE; gray, banded; micritic; fresh; strong; hard; (Salina Group - Unit F).	
218		362		limestone band; very dark gray; pitted/vuggy; micritic; slightly weathered; strong; hard @ 213.4-213.6'	
				214.2	
219		361		LIMESTONE; dark gray; pitted; micritic to very fine grained; slightly weathered; strong; hard; (Salina Group - Unit F).	
219.0				90°,J,Ca,Pa,Pl,SR @ 214.3-214.6'	Core loss @ 219.0-219.6'.
220		360		80°,J,Ca,Fi,Pl,SR @ 214.6-215.2'	
				214.8	
221		359		DOLOMITE; light brownish gray; micritic; fresh; strong; very hard; w/fossils (ostracodes); (Salina Group - Unit F).	
222		358		0°,B,No,No,Pl,SR @ 215.9'	
				limestone parting - 0°,B,Pl,SR @ 216.1'	
				highly fractured @ 216.5-216.6'	
				216.7	
223		357		LIMESTONE; grayish brown; vuggy; micritic; slightly weathered; strong; hard; (Salina Group - Unit F).	
224		356		20°,J,Ca,Pa,Pl,SR @ 217.5-217.6'	
				highly fractured @ 218.3-218.4'	
				50°,J,Ca,Fi,Pl,SR @ 218.9'-219.0'	
				claystone band; dolomitic; very dark greenish gray; very fine grained; highly weathered; very weak; low hardness; slight hydrocarbon odor; properties comparable to low plasticity, low toughness, no dilatancy soil fines @ 219.7-219.9'	Core box #12 starts @ 221.7'.
				30°,J,Ca,Pa,Pl,SR @ 220.4-220.5',220.6-220.7'	
				70°,J,Ca,Pa,Pl,SR @ 220.8-221.2'	
				dolomite; light brownish gray; micritic; fresh; strong; hard; @ 221.4-221.7'	
				20°,J,No,No,Pl,SR @ 222.8'	
				222.9	
224.0				DOLOMITE; light olive brown; micritic; fresh; strong; hard; (Salina Group - Unit F).	Core loss @ 224.0-225.0'.
225				10°,J,Cl,Fi,Pl,SR @ 222.9'	

BORING LOG

CLIENT	PROJECT	PROJECT NO.
Detroit Edison	Fermi 3 COL Application	147483

PROJECT LOCATION	COORDINATES	GROUND ELEVATION (DATUM)	TOTAL DEPTH
Monroe, MI	N 6273.2' E 4606.0'	580.6 ft (NAVD 88)	274.0 (feet)

SURFACE CONDITIONS	COORDINATE SYSTEM	DATE START	DATE FINISHED
Gravel parking lot	Plant	06/13/07	08/01/07

LOGGED BY	CHECKED BY	APPROVED BY
Grainger/Bonnie/Mass	Dogbey/Mass	Meyer

SAMPLING							CORING									
SAMPLE TYPE	SAMPLE NUMBER	SET 6 INCHES	2ND 6 INCHES	3RD 6 INCHES	N VALUE	SAMPLE RECOVERY	CORE SIZE	RUN NUMBER	RUN LENGTH	RUN RECOVERY	RQD RECOVERY	PERCENT RECOVERY	RQD	DEPTH (FEET)	SAMPLE TYPE	ELEVATION (FEET)	GRAPHIC LOG	CLASSIFICATION OF MATERIALS	REMARKS
														225				10°,J,T,Pl @ 223.0'	
																		223.4	
																355		LIMESTONE; grayish brown; vuggy; micritic; slightly weathered; strong; hard; (Salina Group - Unit F).	
														226				30°,J,Cl,Fi,Pl,SR @ 223.5'	
							HQ	51	4.5	3.0	0.0	67	0			354		10°,J,Cl,Fi,Pl,SR @ 223.6'	
																		dark gray; highly fractured @ 225.0-226.0'	
														227				90°,J,Cl,Fi,Pl,SR @ 226.0-226.2'	
																353		dolomite band; pale yellow; micritic; fresh; strong; very hard @ 226.0-226.2'	
																		226.2	
														228				BRECCIA - dolomite clasts in a poorly indurated claystone matrix: claystone matrix; dolomitic; gray; moderately to highly weathered; weak; low hardness; hydrocarbon odor; properties comparable to high plasticity, low toughness, no dilatancy soil fines; w/ angular clasts of dolomite; light gray; micritic; slightly weathered; moderately strong; moderately hard; (Salina Group - Unit F).	Core loss @ 228.0-228.5'. Core barrel jammed @ 228.5'.
										228.5						352			
														229					
																351			
														230					
							HQ	52	4.5	3.8	0.6	84	13			350			
														231					
																349			
																		227.3	
																		DOLOMITE; argillaceous; grayish brown to very dark brownish gray; micritic; fresh; strong; hard; (Salina Group - Unit F).	
																		70°,J,Ca,Fi,Pl,SR @ 227.3-227.8'	
																		0°,J,Ca,Fi,Pl,SR @ 228.2'	
																		60°,J,Ca,Fi,Pl,SR @ 228.3-228.4'	
																		228.5	
														232				BRECCIA - dolomite clasts in a poorly indurated claystone matrix: claystone matrix; dolomitic; gray; moderately to highly weathered; weak; low hardness; hydrocarbon odor; properties comparable to high plasticity, low toughness, no dilatancy soil fines; w/ angular clasts of dolomite; light gray; micritic; slightly weathered; moderately strong; moderately hard; (Salina Group - Unit F).	
																348			
										233.0				233					Core barrel jammed @ 233.0'.
							HQ	53	1.0	0.7	0.0	70	0			347			
														234				grades dark greenish gray @ 229.2'	
										234.0						346		grades greenish gray @ 230.1'	
														235				dolomite; argillaceous; gray; micritic; fresh; strong; hard; w/gypsum nodules @ 230.8-231.1'	
																345			
														236					
																		231.8	
																		DOLOMITE; argillaceous; dark gray; very fine grained (crystalline); fresh; strong; hard; (Salina Group - Unit F).	
																		60°,J,VN,Gy,Fi,Pl @ 231.8-232.4' (many)	
							HQ	54	5.0	4.1	2.2	82	44			344			
																		232.4	
														237				BRECCIA - dolomite clasts in a poorly indurated claystone matrix; claystone matrix; dolomitic; light gray; micritic; moderately to highly weathered; weak; low hardness; hydrocarbon odor; properties comparable to low plasticity, low toughness, no dilatancy soil fines; w/angular clasts of dolomite; light gray; micritic; slightly weathered; moderately strong; moderately hard; (Salina Group - Unit F).	Core loss of 1.0' @ 236.7-239.0'.
																343			
														238					
																342			
										239.0				239				dolomite band; argillaceous; dark gray; very fine grained (crystalline); fresh; strong; hard @ 232.9'	Core box #13 starts @ 239.0'.
																		90°,J,VN-N,Gy,Fi,WA @ 232.9-233.0' (many)	
														240		341		233.0	

BLACK & VEATCH

BORING NO. RB-C3
SHEET 17 OF 19

BORING LOG

CLIENT	PROJECT	PROJECT NO.
Detroit Edison	Fermi 3 COL Application	147483

PROJECT LOCATION	COORDINATES	GROUND ELEVATION (DATUM)	TOTAL DEPTH
Monroe, MI	N 6273.2' E 4606.0'	580.6 ft (NAVD 88)	274.0 (feet)

SURFACE CONDITIONS	COORDINATE SYSTEM	DATE START	DATE FINISHED
Gravel parking lot	Plant	06/13/07	08/01/07

LOGGED BY	CHECKED BY	APPROVED BY
Grainger/Bonnie/Mass	Dogbey/Mass	Meyer

SAMPLING: SAMPLE TYPE, SAMPLE NUMBER, SET 6 INCHES, 2ND 6 INCHES, 3RD 6 INCHES, N VALUE, SAMPLE RECOVERY

CORING: CORE SIZE, RUN NUMBER, RUN LENGTH, RUN RECOVERY, RQD RECOVERY, PERCENT RECOVERY, RQD

SAMPLE TYPE	SAMPLE NUMBER	SET 6 INCHES	2ND 6 INCHES	3RD 6 INCHES	N VALUE	SAMPLE RECOVERY	DEPTH (FEET)	ELEVATION (FEET)	CLASSIFICATION OF MATERIALS	REMARKS
HQ	55	5.0	4.6	1.9	92	38	240–244	340–336	DOLOMITE & ANHYDRITE; mottled; DOLOMITE: dark greenish gray to gray; fresh; strong; hard; ANHYDRITE: light greenish gray to light gray; micritic; fresh; strong; hard; massive; convoluted lenses and partings; (Salina Group - Unit F). 90°,J,VN,anhydrite,Fi,WA @ 233.0-236.7' (many) —236.7— BRECCIA - dolomite clasts in a poorly to indurated claystone matrix: claystone matrix; greenish gray to gray; slightly to highly weathered; moderately hard to very weak; moderately hard to low hardness; slight hydrocarbon odor; properties comparable to low plasticity, low toughness, slow dilatancy soil fines; w/ angular clasts of dolomite; argillaceous; greenish gray; micritic; fresh; strong; hard; (Salina Group - Unit F). —241.3— LIMESTONE; dark grayish brown; vuggy; very fine grained (crystalline); slightly weathered; strong; hard; vugs 0.04-0.4"; some vugs partially filled w/calcite; (Salina Group - Unit F). 90°,J,Ca,Fi,WA,SR @ 241.3-242.0' 50°,J,Ca,Fi,Pl,SR @ 241.6-241.7' 70°,J,Ca,Fi,Pl,SR @ 241.9-242.3' —242.6— DOLOMITE; argillaceous; gray; micritic; fresh; strong; hard; w/shale partings; (Salina Group - Unit E). limestone parting - 0°,J,Pl,SR @ 243.0' 60°,J,Ca,Fi,Pl,SR @ 243.3-243.5' —243.7— DOLOMITE; light brownish gray; micritic; fresh; very strong; hard; w/fossils (ostracodes); few shale partings; (Salina Group - Unit E). 20°,J,No,No,Pl,SR @ 244.8-244.9' mottled w/limestone @ 244.9-245.0' 50°,J,N,Pl @ 245.5-245.9' 150°,J,Ca,Fi,Pl,SR @ 245.5' (2) 70°,J,N,Pl @ 245.8-246.1' 40°,J,Ca,Fi,Pl,SR @ 245.9-246.0' 90°,J,VN,Ca,Fi,Pl @ 246.3-247.2' —247.3— DOLOMITE & LIMESTONE; mottled; dolomite grades to limestone; (Salina Group - Unit E). —249.6— LIMESTONE; dark grayish brown; pitted/vuggy; slightly to moderately weathered; strong; hard; highly fractured; dolomite fragments in limestone; (Salina Group - Unit E). —250.2— DOLOMITE; light gray; micritic; fresh; strong; hard; w/ fossils (ostracodes); few stylolites & shale partings; (Salina Group - Unit E). 44°,J,Ca,Fi,Pl,SR @ 250.6-250.8' 60°, 90°,J,N,Ca,Fi,Pl,SR @ 250.9-251.1' (many fractures) 90°,J,Ca,Pa,Pl,SR @ 251.4-252.0' 0°,J,Cl,Pa,Pl,SR @ 251.5-252.6' grades pale yellow; pitted; w/fossils that dissolve to	
			244.0				244–249	336–331		
HQ	56	5.0	5.0	2.1	100	42	249–254	331–326		Core loss @ 249.0-249.4'. Water level @ 24.5' prior to drilling on 08/01/07.
			249.0				249–254	331–326		
HQ	57	5.0	4.6	1.5	92	30	254–255	326		Core box #14 starts @ 254.0'.
			254.0				254–255	326		

7/17/2008 8:39 AM DTE - Fermi 3 Geotech

BLACK & VEATCH

BORING LOG

BORING NO. RB-C3

CLIENT	PROJECT	PROJECT NO.
Detroit Edison	Fermi 3 COL Application	147483

PROJECT LOCATION	COORDINATES	GROUND ELEVATION (DATUM)	TOTAL DEPTH
Monroe, MI	N 6273.2' E 4606.0'	580.6 ft (NAVD 88)	274.0 (feet)

SURFACE CONDITIONS	COORDINATE SYSTEM	DATE START	DATE FINISHED
Gravel parking lot	Plant	06/13/07	08/01/07

LOGGED BY	CHECKED BY	APPROVED BY
Grainger/Bonnie/Mass	Dogbey/Mass	Meyer

SAMPLING							CORING										
SAMPLE TYPE	SAMPLE NUMBER	SET 6 INCHES	2ND 6 INCHES	3RD 6 INCHES	N VALUE	SAMPLE RECOVERY	CORE SIZE	RUN NUMBER	RUN LENGTH	RUN RECOVERY	RQD RECOVERY	PERCENT RECOVERY	RQD	DEPTH (FEET)	SAMPLE TYPE	ELEVATION (FEET)	GRAPHIC LOG	CLASSIFICATION OF MATERIALS	REMARKS
														255		325		form pits @ 252.1' highly fractured @ 252.3-252.4',252.5-253.0' 70°,J,No,No,Pl,SR @ 252.5-252.9', 253.3-253.7' 40°,J,No,No,Pl,SR @ 253.3-253.5' 0°,B,No,No,Pl,SR @ 253.4' 30°,J,No,No,Pl,SR @ 253.6', 253.7'	Core loss of 1.4' @ 255.7-258.7'.
							HQ	58	5.0	3.6	0.4	72	8	256		324		70°,J,No,No,Pl,SR @ 253.7-254.0' 40°,J,Cl,Pa,Pl,SR @ 254.3-254.6'	
														257		323		highly fractured w/fat clay; about 100% high plasticity, medium toughness, no dilatancy fines; white; wet; slight hydrocarbon odor; strong reaction w/HCl;	
														258		322		homogeneous @ 254.6 254.9' highly fractured @ 255.1-255.2' 30°,J,No,No,Pl,SR @ 255.2' 0°,B,UK,Fi,Pl,SR @ 255.4'	
										259.0				259		321		40°,J,No,No,Pl,SR @ 255.6-255.7' highly fractured @ 255.7-258.7' grades light gray & grayish brown, banded @ 257.8'	
														260		320		—258.8— DOLOMITE; argillaceous; gray, banded; micritic; fresh; very strong; hard; w/shale partings; (Salina Group - Unit E).	
														261		319		—260.1— DOLOMITE; argillaceous; gray & dark gray; interbedded; micritic to very fine grained; fresh; strong to very strong; hard to very hard; w/white; micritic; fresh; moderately strong; moderately hard; convoluted gypsum lenses, partings, bands, and thin beds; trace anhydrite; thickest gypsum bed @ 263.5-263.8'; w/shale partings; (Salina Group - Unit E).	
							HQ	59	5.0	5.0	3.2	100	64	262		318		0°,J,No,No,Pl,SR @ 260.3', 260.5', 262.6' 0°,J,N,Cl,Fi,SR @ 261.8'	
														263		317			
										264.0				264		316		—263.8— DOLOMITE; grayish brown; very fine grained (crystalline); fresh; strong; hard; w/gypsum lenses; (Salina Group - Unit E).	
														265		315		—265.4— DOLOMITE; argillaceous; dark greenish gray; micritic; fresh; strong; hard; w/dark gray; very fine grained; fresh; strong; hard; shale partings and bands; (Salina Group - Unit E).	
							HQ	60	5.0	5.0	4.8	100	96	266		314		0°,J,Cl,Pa,Pl,SR @ 266.1', 266.3' 80°,J,VN,Gy,Fi,Pl,S @ 266.8-267.1'	
														267		313		—267.8— DOLOMITE; grayish brown; very fine grained (crystalline); fresh; strong; hard; w/gypsum lenses; (Salina Group - Unit E).	
														268		312		—268.4— DOLOMITE; argillaceous; dark greenish gray; micritic; fresh; strong; hard; w/dark gray; very fine grained; fresh; strong; hard; shale partings and bands; (Salina Group - Unit E).	Core barrel jammed @
							HQ	61	0.5	269.0 0.5	0.0	100	0	269		311			
										269.5				270					

BLACK & VEATCH

BORING LOG

BORING NO. RB-C3
SHEET 19 OF 19

CLIENT	PROJECT	PROJECT NO.
Detroit Edison	Fermi 3 COL Application	147483

PROJECT LOCATION	COORDINATES	GROUND ELEVATION (DATUM)	TOTAL DEPTH
Monroe, MI	N 6273.2' E 4606.0'	580.6 ft (NAVD 88)	274.0 (feet)

SURFACE CONDITIONS	COORDINATE SYSTEM	DATE START	DATE FINISHED
Gravel parking lot	Plant	06/13/07	08/01/07

LOGGED BY	CHECKED BY	APPROVED BY
GOLer TB TB for Grainger/Bonnie/Mass	EM for TB for Dogbey/Mass	EM Meyer

SAMPLING							CORING									
SAMPLE TYPE	SAMPLE NUMBER	SET 6 INCHES	2ND 6 INCHES	3RD 6 INCHES	N VALUE	SAMPLE RECOVERY	CORE SIZE	RUN NUMBER	RUN LENGTH	RUN RECOVERY	RQD RECOVERY	PERCENT RECOVERY	RQD	DEPTH (FEET)	SAMPLE TYPE	ELEVATION (FEET)

GRAPHIC LOG	CLASSIFICATION OF MATERIALS	REMARKS
	269.1	269.5'. Core box #15 starts @ 269.5'. Core barrel jammed @ 270.5'.
HQ 62 1.0 1.0 0.0 100 0	DOLOMITE; argillaceous; gray & brown; interbedded; micritic; fresh; strong; hard; w/gypsum lenses, partings, bands, and thin beds that compose about 40% volume of layer; thickest gypsum bed @ 271.9-272.2'; (Salina Group - Unit E).	
270.5		
HQ 63 3.5 3.5 3.5 100 100	grades brownish downward	
	claystone band; dolomitic; white; micritic; highly weathered; very weak; friable; strong hydrocarbon odor; properties comparable to low plasticity, low toughness, slow dilatancy soil fines @ 269.7-269.8'	
	0°,B/J,Cl,Pa,Pl,SR @ 271.8'	
	272.8	
	DOLOMITE; brown; pitted; micritic; fresh; very strong; very hard; w/fossils (ostracodes) & few widely spaced gypsum partings; (Salina Group - Unit E).	Bottom of boring @ 274.0'. Water level @ 25.3' @ completion of drilling. Backfilled w/ bentonite chips to 35' on 09/07/07. Backfilled w/ bentonite chips to 4' & backfilled w/gravel to surface on 09/13/07.

DEPTH (FEET): 270, 271, 272, 273, 274, 275, 276, 277, 278, 279, 280, 281, 282, 283, 284, 285

ELEVATION (FEET): 310, 309, 308, 307, 306, 305, 304, 303, 302, 301, 300, 299, 298, 297, 296

BLACK & VEATCH

BORING LOG

BORING NO. RB-C4

SHEET 1 OF 19

CLIENT	PROJECT	PROJECT NO.
Detroit Edison	Fermi 3 COL Application	147483

PROJECT LOCATION	COORDINATES	GROUND ELEVATION (DATUM)	TOTAL DEPTH
Monroe, MI	N 6188.9' E 4448.8'	580.2 ft (NAVD 88)	271.8 (feet)

SURFACE CONDITIONS	COORDINATE SYSTEM	DATE START	DATE FINISHED
Gravel parking lot near field	Plant	06/14/07	07/13/07

LOGGED BY	CHECKED BY	APPROVED BY
TB Bonnie/Grainger/Mass TB for	SM JF Dogbey/Mass TB for	Meyer EM

SAMPLING: SAMPLE TYPE	SAMPLE NUMBER	SET 6 INCHES	2ND 6 INCHES	3RD 6 INCHES	N VALUE	SAMPLE RECOVERY	CORING: CORE SIZE	RUN NUMBER	RUN LENGTH	RUN RECOVERY	RQD RECOVERY	PERCENT RECOVERY	RQD	DEPTH (FEET)	SAMPLE TYPE	ELEVATION (FEET)	GRAPHIC LOG	CLASSIFICATION OF MATERIALS	REMARKS
S	1												NR	0		580		Poorly graded COBBLES - About 90% angular to subangular, cobbles w/max. size 9"; about 10% sand; dark reddish gray; dry; weak reaction w/HCl; homogeneous; (Fill).	Boring advanced w/4" ID sonic continuous sampler w/nominal 6" temporary steel casing advanced w/sampler.
														1		579			
														2		578			
														3		577			Discrete sample S01 collected from S-1.
														4		576			
S	2									5.0			NR	5		575			
														6		574			
														7		573			Discrete sample S02 collected from S-2.
														8		572			
														9		571			
S	3									10.0			NR	10		570			
														11		569			
														12		568		Lean CLAY with Gravel (CL) - About 82% LL=34, PL=17, no dilatancy, high dry strength fines; about 10% gravel; about 8% fine to coarse sand; reddish brown & gray, mottled; moist; no reaction w/HCl; homogeneous.	Discrete sample S03 collected from S-3 (between 12.0' & 14.0').
														13		567			
														14		566			
														15					

12.0

4/25/2008 6:35 PM DTE - Fermi 3 Geotech

BLACK & VEATCH

BORING LOG

BORING NO. RB-C4

CLIENT	PROJECT	PROJECT NO.
Detroit Edison	Fermi 3 COL Application	147483

PROJECT LOCATION	COORDINATES	GROUND ELEVATION (DATUM)	TOTAL DEPTH
Monroe, MI	N 6188.9' E 4448.8'	580.2 ft (NAVD 88)	271.8 (feet)

SURFACE CONDITIONS	COORDINATE SYSTEM	DATE START	DATE FINISHED
Gravel parking lot near field	Plant	06/14/07	07/13/07

LOGGED BY	CHECKED BY	APPROVED BY
Bonnie/Grainger/Mass	Dogbey/Mass	Meyer

SAMPLING							CORING									
SAMPLE TYPE	SAMPLE NUMBER	SET 6 INCHES	2ND 6 INCHES	3RD 6 INCHES	N VALUE	SAMPLE RECOVERY	CORE SIZE	RUN NUMBER	RUN LENGTH	RUN RECOVERY	RQD RECOVERY	PERCENT RECOVERY	RQD	DEPTH (FEET)	SAMPLE TYPE	ELEVATION (FEET)
										15.0				15		565
TW	4					1.7								16		564
														17		563
														18		562
SPT	5	3	5	6	11	1.5								19		561
														20		560
TW	6					1.0								21		559
														22		558
SPT	7	2	6	12	18	1.0								23		557
TW	8					0.2								24		556
P	9					1.2								25		555
														26		554
														27		553
														28		552
														29		551
														30		

GRAPHIC LOG	CLASSIFICATION OF MATERIALS	REMARKS
	15.3 Lean CLAY (CL) - About 99% LL=37, PL=17 fines; about 1% fine to medium sand; reddish brown & gray, mottled; moist; no reaction w/HCl; homogeneous.	Below 15.0', continued w/NWJ rods & 4½" tricone bit using bentonite mud as drilling fluid. SPT performed w/D-50 automatic hammer.
	17.8 Lean CLAY (CL) - About 90% LL=40, PL=19, slow dilatancy, high dry strength fines; about 10% fine to coarse sand; <1% gravel; dark gray & weak red; laminated; soft; moist; (Glacial Till).	
	20.8 Lean CLAY with Sand and Cobbles (CL) - About 80% medium plasticity, medium toughness, slow dilatancy, high dry strength fines; about 15% fine to coarse, rounded, hard sand; about 5% angular, hard cobbles; dark gray; very stiff; moist; strong reaction w/HCl; homogeneous; (Glacial Till). grades w/cobbles @ 21.2'	TW refusal @ 21.2'. Hard drilling @ 21.2'.
	21.6 Lean CLAY with Sand (CL) - About 71% LL=24, PL=13, high dry strength fines; about 27% fine to coarse, rounded, hard sand; about 2% gravel; dark gray; hard; moist; strong reaction w/HCl; homogeneous; (Glacial Till).	
	24.2 Clayey SAND (SC) - About 73% fine to coarse, rounded, hard sand; about 17% LL=18, PL=11 fines; about 10% gravel; dark gray; moist; strong reaction w/ HCl; homogeneous; (Glacial Till). grades w/cobbles @ 26.0'	TW refusal @ 24.2'. Sample w/pitcher sampler. PP > 4.5 TSF @ 26.0'. Drilling indicates gravel & cobbles @ 26.0'.

BLACK & VEATCH

BORING LOG

BORING NO. RB-C4

CLIENT	PROJECT	PROJECT NO.
Detroit Edison	Fermi 3 COL Application	147483

PROJECT LOCATION	COORDINATES	GROUND ELEVATION (DATUM)	TOTAL DEPTH
Monroe, MI	N 6188.9' E 4448.8'	580.2 ft (NAVD 88)	271.8 (feet)

SURFACE CONDITIONS	COORDINATE SYSTEM	DATE START	DATE FINISHED
Gravel parking lot near field	Plant	06/14/07	07/13/07

LOGGED BY	CHECKED BY	APPROVED BY
Bonnie/Grainger/Mass	Dogbey/Mass	Meyer

SAMPLING							CORING									
SAMPLE TYPE	SAMPLE NUMBER	SET 6 INCHES	2ND 6 INCHES	3RD 6 INCHES	N VALUE	SAMPLE RECOVERY	CORE SIZE	RUN NUMBER	RUN LENGTH	RUN RECOVERY	RQD RECOVERY	PERCENT RECOVERY	RQD	DEPTH (FEET)	SAMPLE TYPE	ELEVATION (FEET)	GRAPHIC LOG	CLASSIFICATION OF MATERIALS	REMARKS
SPT	10	50/4"	-	-	50+	0.2								30		550			
														31		549			
			31.3															31.3	Split spoon refusal @ 31.3'. Below 31.3' continued w/4" ID sonic continuous sampler w/nominal 6" temporary steel casing advanced w/sampler. Set nominal 6" temporary steel casing to 34.0'. Sonic core S-11 stored in box labeled S1. Below 34.7' continued w/ triple tube wire line core barrel w/diamond bit using water as drilling fluid. Water level @ 13.9' prior to drilling on 06/26/07. Core box #1 starts @ 34.7'. Drill chatter @ 38.5'. Drill chatter @ 40.0'.
S	11					3.4								32		548		DOLOMITE; dark gray; micritic; slightly weathered; very strong; very hard; medium bedded; (Bass Islands Group).	
														33		547			
														34		546			
			34.7															34.7	
														35		545		DOLOMITE; gray; micritic; fresh; strong; hard; w/moderately wide spaced stylolites; (Bass Islands Group). 0°,J,Gy,Pa,WA,R @ 35.3' 0°,J,No,No,Pl,R @ 35.7', 35.9'	
														36		544			
HQ	1	4.3	4.3	2.1	100	49								37		543			
														38		542		90°,J,No,No,Pl,SR @ 37.6-39.0' 85°,J,No,No,Pl,SR @ 37.6-39.0' numerous, closely spaced fractures @ 37.6-39.0'	
														39		541		0°,J,Cl,Fi,Pl,SR @ 38.8'	
			39.0															90°,J,No,No,Pl,R @ 39.2-39.8' 0°,J,Cl,Pa,Pl,SR @ 39.3', 39.9', 40.0', 40.2' 20°,J,No,No,Pl,SR @ 39.6' highly fractured @ 40.0-40.2' grades brownish gray @ 40.2'	
														40		540			
														41		539		0°,B,No,No,Pl,R @ 41.1'	
HQ	2	5.0	5.0	2.9	100	58								42		538		0°,B,UK,Fi,Pl,SR @ 41.7' 0°,B,No,No,Pl,SR @ 41.9', 42.8' 90°,J,Cl,Pa,Pl,SR @ 42.0-42.6' gray; very fine to fine grained (crystalline) @ 42.2-42.8'	
														43		537		60°,J,No,No,Pl,SR @ 43.1-43.2' 0°,B,UK,Pa,Pl,SR @ 43.2', 43.4', 43.7', 43.9' 90°,J,No,No,Ir,SR @ 43.4-44.0' (3) intersect about vertical axis highly fractured @ 44.0-44.5'	
			44.0											44		536			
																		44.5	Water level @ 18.2' prior to
														45				DOLOMITE; gray; vuggy; micritic to fine grained	

BLACK & VEATCH **BORING LOG**

CLIENT	PROJECT	PROJECT NO.
Detroit Edison	Fermi 3 COL Application	147483

PROJECT LOCATION	COORDINATES	GROUND ELEVATION (DATUM)	TOTAL DEPTH
Monroe, MI	N 6188.9' E 4448.8'	580.2 ft (NAVD 88)	271.8 (feet)

SURFACE CONDITIONS	COORDINATE SYSTEM	DATE START	DATE FINISHED
Gravel parking lot near field	Plant	06/14/07	07/13/07

LOGGED BY	CHECKED BY	APPROVED BY
TB Bonnie/Grainger/Mass	TB for Dogbey/Mass	Meyer

SAMPLING							CORING									
SAMPLE TYPE	SAMPLE NUMBER	SET 6 INCHES	2ND 6 INCHES	3RD 6 INCHES	N VALUE	SAMPLE RECOVERY	CORE SIZE	RUN NUMBER	RUN LENGTH	RUN RECOVERY	RQD RECOVERY	PERCENT RECOVERY	RQD	DEPTH (FEET)	SAMPLE TYPE	ELEVATION (FEET)	GRAPHIC LOG	CLASSIFICATION OF MATERIALS	REMARKS
														45		535		(crystalline); fresh to slightly weathered; strong; very hard; largest vug about 1" diameter; larger vugs partially filled with calcite crystals; (Bass Islands Group).	drilling on 06/27/07.
														46		534		30°,J,Ca,Pa,Pl,SR @ 44.5'	
							HQ	3	5.0	5.0	2.5	100	50					60°,J,Ca,Pa,Pl,R @ 46.0-46.4'	
																		110°,J,Ca,Pa,Pl,R @ 46.0-46.4'	
														47		533		0°,B,No,No,WA,R @ 46.6'	
														48		532		10°,J/B,Ca,Pa,Pl,SR @ 48.3'	
																		20°,J/B,No,No,Pl,SR @ 48.8'	
										49.0				49		531		grades pale brown @ 49.0'	Core box #2 starts @ 49.0'.
																		0°,B,Cl,Pa,Pl,R @ 49.0'	
																		0°,B,UK,Pa,St,SR @ 49.3'	
														50		530		90°,J,UK,Pa,Pl,SR @ 49.3-49.5'	
																		135°,J,Cl/Ca,Pa,Pl,SR @ 50.1-50.4'	
																		20°,J,Cl/Ca,Pa,Pl,SR @ 50.2-50.4'	
																		20°,J,Cl,Pa,Pl,SR @ 50.6'	
														51		529		85°,J,No,No,Pl,SR @ 50.9-51.0'	
							HQ	4	5.0	5.0	2.3	100	46					0°,B,UK,Pa,Pl,SR @ 51.1'	
																		30°,J,No,No,Pl,SR @ 51.1-51.2'	
																		75°,J,No,No,Pl,R @ 51.7-51.9'	
														52		528		140°,J,UK,Pa,Pl,SR @ 51.8-52.1'	
																		90°,J,Ca,Pa,WA,SR/R @ 52.2-53.6'	Drill chatter @ 52.4'.
																		75°,J,Ca,Pa,Pl,SR @ 52.3-52.5'	
														53		527		0°,B,No,No,Pl,SR @ 52.4'	
																		53.1	
																		DOLOMITE; gray; micritic to very fine grained (crystalline); fresh; very strong; hard; w/claystone partings (<0.1" thick) & moderately wide spaced stylolites; (Bass Islands Group).	
										54.0				54		526			Drill chatter @ 54.0'. Core barrel jammed @ 54.0'.
																		40°,J,No,No,Pl,SR @ 54.9-55.2'	
														55		525			
																		very closely spaced stylolites @ 56.2-56.8'	
							HQ	5	5.0	5.0	3.3	100	66	56		524			
																		85°,J,Ca,Pa,Pl,SR @ 57.3-59.0'	
														57		523		0°,B,Ca,Pa,Pl,SR @ 57.3', 57.7', 57.8'	Core loss @ 57.4-58.0'.
																		highly fractured @ 57.4-58.0'	
														58		522		40°,J,Ca,Pa,Pl,SR @ 58.0'	
										59.0				59		521		59.3	
																		SHALE; black; platy; very fine grained; fresh; moderately strong; moderately hard;	Drill chatter @ 59.2'.
														60					

BLACK & VEATCH

BORING LOG

CLIENT	PROJECT	PROJECT NO.
Detroit Edison	Fermi 3 COL Application	147483

PROJECT LOCATION	COORDINATES	GROUND ELEVATION (DATUM)	TOTAL DEPTH
Monroe, MI	N 6188.9' E 4448.8'	580.2 ft (NAVD 88)	271.8 (feet)

SURFACE CONDITIONS	COORDINATE SYSTEM	DATE START	DATE FINISHED
Gravel parking lot near field	Plant	06/14/07	07/13/07

LOGGED BY	CHECKED BY	APPROVED BY
Bonnie/Grainger/Mass	Dogbey/Mass	Meyer

SAMPLING							CORING									
SAMPLE TYPE	SAMPLE NUMBER	SET 6 INCHES	2ND 6 INCHES	3RD 6 INCHES	N VALUE	SAMPLE RECOVERY	CORE SIZE	RUN NUMBER	RUN LENGTH	RUN RECOVERY	RQD RECOVERY	PERCENT RECOVERY	RQD	DEPTH (FEET)	SAMPLE TYPE	ELEVATION (FEET)	GRAPHIC LOG	CLASSIFICATION OF MATERIALS	REMARKS
														60		520		(Bass Islands Group). 0°,B,No,No,Pl,SR @ 59.3'	
																		59.6	
														61		519		DOLOMITE & SHALE; dolomitic; light gray & very dark gray, mottled; micritic to very fine grained; fresh; strong; hard; (Bass Islands Group). 20°,J,No,No,Pl,S @ 59.6' 0°,B,No,No,Pl,SR @ 60.0'	
														62		518		60.0	
							HQ	6	5.0	5.0	3.4	100	68	63		517		DOLOMITE; oolitic; light brownish gray; medium to coarse grained (crystalline); fresh; very strong; very hard; oolites 0.008-0.04"; (Bass Islands Group). 0°,B,Ca,Pa,Pl,SR @ 62.4' 40°,J,No,No,Pl,SR @ 62.5-62.7' 70°,J,Ca,Pa,Pl,SR @ 62.6-62.7' 140°,J,No,No,Pl,R @ 62.8-62.9' 50°,J,No,No,Pl,SR @ 62.9-63.1' 0°,B,Cl,Fi,Pl,SR @ 62.9' 20°,J,No,No,Pl,SR @ 63.6-63.7'	Drill chatter @ 63.0'. Core box #3 starts @ 63.6'.
										64.0				64		516		64.0	
														65		515		DOLOMITE; light brownish gray; micritic to very fine grained; fresh; strong; hard; w/black; platy; moderately strong; moderately hard; very closely spaced claystone partings; thickest parting 0.2"; (Bass Islands Group). 90°,J,Ca,Pa,Pl,SR @ 64.3-65.7' 0°,B,Cl/Ca,Fi,Pl,SR @ 64.3', 64.5', 64.7', 65.4', 65.6', 65.9', 66.3' 90°,J,Ca,Pa,Pl,SR @ 65.0-65.7'	
														66		514			Drill chatter @ 66.0-69.0'.
							HQ	7	5.0	4.6	2.5	92	50	67		513			
														68		512		20°,J,Cl,Fi,Pl,SR @ 67.6'	
																		40°,J,Cl,Fi,Pl,SR @ 68.6' 0°,B,Ca,Pa,Pl,SR @ 68.6, 68.8' 90°,J,VN,UK,Pl @ 68.6-68.7', 69.3-69.9' highly fractured @ 69.4-69.5', 69.7-69.8'	
										69.0				69		511			
														70		510		highly fractured @ 70.3-70.4' 90°,J,VN,Ca,Pa,Pl,SR @ 70.5-71.0' highly fractured @ 70.8-71.6'	
														71		509			
							HQ	8	5.0	5.0	2.2	100	44					90°,J,VN,Ca,Pa,Pl,SR @ 71.3-71.7'	Drill chatter @ 71.5'.
														72		508		70°,J,No,No,Pl,SR @ 71.9-72.0' grades vuggy @ 72.0' 60°,J,No,No,Ir,SR @ 72.3-72.4' very closely spaced stylolites @ 72.4-72.6' grades w/moderately wide spaced stylolites @ 72.6' 30°,J,No,No,Pl,SR @ 72.6-72.8'	
														73		507			
										74.0				74		506		highly fractured @ 74.0-74.6'	
																		50°,J,No,No,Pl,SR @ 74.4' 30°,J,Ca,Pa,Pl,SR @ 74.7-74.8'	
														75					

BLACK & VEATCH

BORING LOG

BORING NO. RB-C4

CLIENT	PROJECT	PROJECT NO.
Detroit Edison	Fermi 3 COL Application	147483

PROJECT LOCATION	COORDINATES	GROUND ELEVATION (DATUM)	TOTAL DEPTH
Monroe, MI	N 6188.9' E 4448.8'	580.2 ft (NAVD 88)	271.8 (feet)

SURFACE CONDITIONS	COORDINATE SYSTEM	DATE START	DATE FINISHED
Gravel parking lot near field	Plant	06/14/07	07/13/07

LOGGED BY	CHECKED BY	APPROVED BY
GCO for TB for Bonnie/Grainger/Mass	EM for TB for Dogbey/Mass	Meyer EM

SAMPLING: SAMPLE TYPE	SAMPLE NUMBER	SET 6 INCHES	2ND 6 INCHES	3RD 6 INCHES	N VALUE	SAMPLE RECOVERY

CORING: CORE SIZE	RUN NUMBER	RUN LENGTH	RUN RECOVERY	RQD RECOVERY	PERCENT RECOVERY	RQD
HQ	9	5.0	4.4	0.7	88	14
HQ	10	5.0	4.5	3.3	90	66
HQ	11	5.0	5.0	2.4	100	48

DEPTH (FEET)	ELEVATION (FEET)	CLASSIFICATION OF MATERIALS	REMARKS
75	505	60°,J,No,No,Pl,SR @ 75.3-75.4'	
		0°,B,UK,Fi,Pl,SR @ 75.5'	
76	504	70°,J,No,No,Pl,SR @ 75.7-76.4'	
		90°,J,No,No,Pl,SR @ 76.3'	
77	503	highly fractured @ 77.2-77.3'	
		10°,J,Cl,Fi,Pl,SR @ 77.2'	
		10°,J,No,No,Pl,SR @ 77.3'	
78	502	70°,J,No,No,Pl,SR @ 77.4-77.9'	
		0°,B,Cl,Fi,Pl,SR @ 78.4'	
		90°,J,Ca,Pa,Pl,SR @ 78.4-78.9'	
79	501	90°,J,No,No,Pl,SR @ 78.5'	Water level @ 18.0' prior to drilling on 06/28/07. Core box #4 starts @ 79.0'. Core loss @ 80.5-80.7'.
		50°,J,Ca,Pa,Pl,SR @ 78.7'	
		highly fractured @ 78.8-79.0'	
80	500	very closely spaced stylolites @ 79.6-80.0'	
		80.4	
81	499	DOLOMITE; brecciated (healed); w/many closely spaced vugs & joints, irregular rough surfaces; vugs & joints filled w/about 0.5" calcite crystals & about 1-2" anhydrite crystals; (Bass Islands Group).	
		brecciated (not healed) @ 80.8-81.1'	
82	498	40°,J,Ca/Mg,Pa,Pl,SR @ 81.2-81.3'	
		81.3	
83	497	DOLOMITE; light brownish gray; micritic to very fine grained; fresh; strong; hard; w/black; platy; moderately strong; moderately hard; very closely spaced claystone partings; thickest parting 0.2"; moderately wide to widely spaced stylolites; (Bass Islands Group).	Soft material @ 83.5'. Core loss @ 83.7-84.0'.
84	496	highly fractured @ 83.2-84.2'	
		0°,B,UK,Pa,Pl,SR @ 83.3'	
85	495	90°,J,No,Ir,R @ 83.3-85.1' (2, parallel)	
		highly fractured @ 84.9-85.1'	
86	494	10°,J/B,No,No,Pl,SR @ 86.4'	
		grades pale brown; stylolites & vugs absent @ 86.5'	
87	493	86.9	
		DOLOMITE; brecciated (healed); pale brown; w/shale partings; (Bass Islands Group).	
88	492	87.4	Drill chatter @ 88.0'.
		SHALE; very dark gray; platy; very fine grained; slightly weathered; moderately strong; moderately hard; (Bass Islands Group).	
89	491	87.7	
		DOLOMITE; grayish brown; micritic to very fine grained (crystalline); fresh; strong; hard; (Bass Islands Group).	
90		0°,B,No,No,Pl,SR @ 87.7'	

BLACK & VEATCH

BORING LOG

BORING NO. RB-C4

CLIENT	PROJECT	PROJECT NO.
Detroit Edison	Fermi 3 COL Application	147483

PROJECT LOCATION	COORDINATES	GROUND ELEVATION (DATUM)	TOTAL DEPTH
Monroe, MI	N 6188.9' E 4448.8'	580.2 ft (NAVD 88)	271.8 (feet)

SURFACE CONDITIONS	COORDINATE SYSTEM	DATE START	DATE FINISHED
Gravel parking lot near field	Plant	06/14/07	07/13/07

LOGGED BY	CHECKED BY	APPROVED BY
Bonnie/Grainger/Mass	Dogbey/Mass	Meyer

SAMPLING							CORING									
SAMPLE TYPE	SAMPLE NUMBER	SET 6 INCHES	2ND 6 INCHES	3RD 6 INCHES	N VALUE	SAMPLE RECOVERY	CORE SIZE	RUN NUMBER	RUN LENGTH	RUN RECOVERY	RQD RECOVERY	PERCENT RECOVERY	RQD	DEPTH (FEET)	SAMPLE TYPE	ELEVATION (FEET)	GRAPHIC LOG	CLASSIFICATION OF MATERIALS	REMARKS
							HQ	12	5.0	5.0	3.7	100	74	90		490		70°,J,Ca,Pa,Ir,SR @ 87.7-88.4', 87.8-87.9' banded w/shale @ 87.7-88.1' 0°,B,UK,Pa,Pl,SR @ 88.1' w/fossils (ostracodes) @ 88.1-88.4' 75°,J,VN,UK,Pl @ 88.4-88.8' highly fractured @ 88.8-89.5' 90°,J,Ca,Pa,Pl,SR @ 89.5-89.8' 90°,J,VN,UK,Ir @ 90.3-91.0' 80°,J,No,No,Pl,SR @ 91.0-91.3' 30°,J,Cl,Pa,Pl,SR @ 91.8'	
														91		489			
														92		488			
														93		487		30°,J,UK,Pa,St,SR @ 92.8' 90°,J,VN,No,No,Pl @ 93.0-93.4' 30°,J,Cl,Pa,Pl,SR @ 93.4-93.5'	
																		93.5	No drilling fluid return @ 93.5'. Core box #5 starts @ 94.0'.
										94.0				94		486		DOLOMITE; argillaceous; dark gray; micritic; fresh; strong; hard; (Bass Islands Group).	
														95		485			
														96		484		claystone lens @ 95.4' 60°,J,Ca,Pa,Pl,SR @ 95.4-95.5' 0°,J,No,No,Pl,SR @ 95.7', 96.9', 97.9'	
							HQ	13	5.0	5.0	2.5	100	50					10°,J/B,Cl,Pa,Pl,SR @ 96.2' claystone parting; black; fresh; moderately strong; moderately hard @ 96.4-96.5'	
														97		483		96.5 DOLOMITE; gray, banded; micritic; fresh; strong; hard; w/gray, wavy, convoluted, very closely spaced claystone partings; (Bass Islands Group). 60°,J,No,No,Pl,SR @ 96.5-96.6' highly fractured @ 96.9'	
														98		482		97.2 DOLOMITE; argillaceous; gray & dark gray, banded; micritic; fresh; moderately strong; hard; horizontal bands; w/gray claystone partings; (Bass Islands Group).	Drill chatter @ 98.5'.
										99.0				99		481			
														100		480		80°,J,Ca,Pa,Pl,SR @ 99.0-100.1' 0°,B,Cl,Fi,Pl,SR @ 99.2'	
														101		479		highly fractured @ 101.1-101.2'	
							HQ	14	5.0	5.0	4.3	100	86					grades dark gray; w/very closely spaced claystone partings @ 101.3' 0°,B,Cl,Fi,Pl,SR @ 101.7'	
														102		478		10°,B,Cl,Pa,Pl,SR @ 102.4' 0°,B,Cl,Fi,Pl,SR @ 102.6',103.1'	
														103		477			
														104		476		10°,B,Cl,Pa,Pl,SR @ 103.6'	Drill chatter @ 103.5'.
										104.0								0°,B,Cl,Pa,Pl,SR @ 104.3' 80°,J,Ca,Pa,Pl,SR @ 104.3-104.4'	
														105					

BLACK & VEATCH

BORING LOG

BORING NO. RB-C4

CLIENT	PROJECT	PROJECT NO.
Detroit Edison	Fermi 3 COL Application	147483

PROJECT LOCATION	COORDINATES	GROUND ELEVATION (DATUM)	TOTAL DEPTH
Monroe, MI	N 6188.9' E 4448.8'	580.2 ft (NAVD 88)	271.8 (feet)

SURFACE CONDITIONS	COORDINATE SYSTEM	DATE START	DATE FINISHED
Gravel parking lot near field	Plant	06/14/07	07/13/07

LOGGED BY	CHECKED BY	APPROVED BY
TB Bonnie/Grainger/Mass	TB for Dogbey/Mass	Meyer

SAMPLING							CORING										
SAMPLE TYPE	SAMPLE NUMBER	SET 6 INCHES	2ND 6 INCHES	3RD 6 INCHES	N VALUE	SAMPLE RECOVERY	CORE SIZE	RUN NUMBER	RUN LENGTH	RUN RECOVERY	RQD RECOVERY	PERCENT RECOVERY	RQD	DEPTH (FEET)	SAMPLE TYPE	ELEVATION (FEET)	GRAPHIC LOG	CLASSIFICATION OF MATERIALS	REMARKS
														105		475		0°,B,No,No,Pl,SR @ 104.6', 107.3' 0°,B,Ca,Pa,Pl,SR @ 104.9',105.5' highly fractured @ 104.9-105.5' 60°,J,No,No,Pl,SR @ 105.5-105.6'	Core loss @ 104.9-105.5'. Drill chatter @ 105.0'.
														106		474		grades light brownish gray; few claystone partings; moderately wide spaced stylolites @ 105.6' 15°,J,Ca,Fi,Pl,SR @ 105.9' 90°,J,Ca,Pa,Pl,SR @ 105.9-106.6'	
HQ	15	5.0	5.0	2.5	100	50								107		473			
														108		472		0°,B,Ca,Pa,Pl,SR @ 107.8'	
																		90°,J,Ca,Pa,Pl,SR @ 108.7-111.4'	
			109.0											109		471		90°,J,No,No,Pl,SR @ 109.0-109.8'	Core box #6 starts @ 109.0'.
																		0°,B,No,No,Pl,SR @ 109.4' 30°,J,No,No,Pl,S @ 109.4-109.7',109.6-109.8' claystone bands; light gray; highly weathered; very weak; low hardness; w/angular fragments of dolomite @ 109.8-110.0', 110.7-110.9'	
														110		470			
														111		469		calcite parting; white; 0.1" thick @ 110.9'	
																		111.0 DOLOMITE; argillaceous; dark gray; vuggy; micritic; fresh to slightly weathered; strong; hard to very hard; w/stylolites; (Bass Islands Group). 90°,J,Ca,Pa,WA,SR/R @ 111.8-113.7'	
HQ	16	5.0	5.0	1.4	100	28								112		468			
														113		467			
														114		466		60°,J,Cl,Pa,Pl,SR @ 114.0-114.3', 114.6-114.9' 60°,J,W,Cl,Fi,Pl,SR @ 114.3-114.6'	
			114.0																
														115		465		50°,J,Cl,Pa,Pl,SR @ 114.9-115.2'	
														116		464		highly fractured; some claystone partings & lenses; thickest lens 1.2" @ 115.7-117.9'	Core loss of 0.9' @ 115.7-117.9'.
HQ	17	5.0	4.1	1.2	82	24								117		463			
														118		462		50°,J,Ca,Pa,Pl,SR @ 117.9-118.0' 120°,J,Ca,Pa,Pl,SR @ 117.9-118.0'	
														119		461		highly fractured @ 118.8-119.1'	
			119.0															0°,J,UK,Pa,Ir,R @ 119.3'	
														120					

BLACK & VEATCH

BORING LOG

BORING NO. RB-C4

CLIENT	PROJECT	PROJECT NO.
Detroit Edison	Fermi 3 COL Application	147483

PROJECT LOCATION	COORDINATES	GROUND ELEVATION (DATUM)	TOTAL DEPTH
Monroe, MI	N 6188.9' E 4448.8'	580.2 ft (NAVD 88)	271.8 (feet)

SURFACE CONDITIONS	COORDINATE SYSTEM	DATE START	DATE FINISHED
Gravel parking lot near field	Plant	06/14/07	07/13/07

LOGGED BY	CHECKED BY	APPROVED BY
TB Bonnie/Grainger/Mass	TB for Dogbey/Mass	Meyer

SAMPLING							CORING									
SAMPLE TYPE	SAMPLE NUMBER	SET 6 INCHES	2ND 6 INCHES	3RD 6 INCHES	N VALUE	SAMPLE RECOVERY	CORE SIZE	RUN NUMBER	RUN LENGTH	RUN RECOVERY	RQD RECOVERY	PERCENT RECOVERY	RQD	DEPTH (FEET)	SAMPLE TYPE	ELEVATION (FEET)	GRAPHIC LOG	CLASSIFICATION OF MATERIALS	REMARKS
														120		460		120.5	
							HQ	18	5.0	4.2	1.2	84	24	121		459		DOLOMITE; argillaceous; & SHALE; dolomitic; gray & dark gray, banded; vuggy; micritic to very fine grained; fresh to slightly weathered; strong; moderately hard to hard; w/claystone partings; (Salina Group - Unit F). 60°,J,Ca,Pa,Pl,SR @ 121.3-121.9' claystone partings - 0°,B,Pl,SR @ 121.9', 122.2', 122.3', 122.9', 123.2', 123.4', 123.7' 70°,J,Ca,Pa,Pl,SR @ 122.6-122.8' 60°,J,Ca,Fi,Pl,SR @ 123.1-123.4'	Core loss @ 120.5-121.3'.
														122		458			
														123		457			
										124.0				124		456		60°,J,No,No,Pl,SR @ 124.3-124.5'	Core box #7 starts @ 124.0'.
														125		455		125.5	
							HQ	19	5.0	4.2	0.7	84	14	126		454		DOLOMITE; argillaceous; & SHALE; dolomitic; gray; vuggy; micritic; fresh to moderately weathered; strong; moderately hard; w/lenses & partings of dolomitic & shaley limestone & anhydrite; (Limestone; gray; slightly weathered; very fine to fine grained; moderately strong; moderately hard; mostly lenses; Anhydrite; white; micritic; fresh to slightly weathered; moderately strong; moderately hard; mostly partings); (Salina Group - Unit F). highly fractured @ 125.7-125.9' 80°,J,Cl,Fi,Pl,SR @ 126.2-126.8' highly fractured @ 126.4-127.8' 20°,J,Ca,Pa,Pl,SR @ 127.4-127.5' 60°,J,Ca,Pa,Pl,SR @ 127.9-128.1'	Core loss in highly weathered, fractured rock.
														127		453			
														128		452			
										129.0				129		451		129.5	Water level @ 22.3' prior to drilling on 06/29/07.
							HQ	20	5.0	1.8	0.4	36	8	130		450		LIMESTONE; argillaceous; dark gray; vuggy; crystalline; very fine to fine grained; slightly to moderately weathered; moderately strong; moderately hard; (Salina Group - Unit F). highly fractured @ 129.5-134.0'	Core loss @ 129.4-134.0'.
														131		449			
														132		448			
														133		447		claystone band; gray; highly weathered; very weak; low hardness; w/highly fractured limestone partings @ 132.7-132.9' 0°,B,Cl,Fi,Pl,SR @ 133.0',133.2'	
										134.0				134		446			Core loss throughout @ 134.0-149.0'.
														135					

BLACK & VEATCH

BORING LOG

BORING NO. RB-C4

CLIENT	PROJECT	PROJECT NO.
Detroit Edison	Fermi 3 COL Application	147483

PROJECT LOCATION	COORDINATES	GROUND ELEVATION (DATUM)	TOTAL DEPTH
Monroe, MI	N 6188.9' E 4448.8'	580.2 ft (NAVD 88)	271.8 (feet)

SURFACE CONDITIONS	COORDINATE SYSTEM	DATE START	DATE FINISHED
Gravel parking lot near field	Plant	06/14/07	07/13/07

LOGGED BY	CHECKED BY	APPROVED BY
TB Bonnie/Grainger/Mass	TB for Dogbey/Mass	Meyer

SAMPLING: SAMPLE TYPE, SAMPLE NUMBER, SET 6 INCHES, 2ND 6 INCHES, 3RD 6 INCHES, N VALUE, SAMPLE RECOVERY

CORING: CORE SIZE, RUN NUMBER, RUN LENGTH, RUN RECOVERY, RQD RECOVERY, PERCENT RECOVERY, RQD

SAMPLE TYPE	SAMPLE NUMBER	SET 6 INCHES	2ND 6 INCHES	3RD 6 INCHES	N VALUE	SAMPLE RECOVERY	DEPTH (FEET)	ELEVATION (FEET)	CLASSIFICATION OF MATERIALS	REMARKS
HQ	21	2.5	0.0	0.0	0	0	135	445	135.0 CLAYSTONE; based on televiewer log; (Salina Group - Unit F).	Soft drilling starts @ about 135.0'. Driling water reduced to minimum. Bit clogged w/clay-like material.
			136.5				136	444		
HQ	22	2.5	1.5	0.0	60	0	137	443	137.0 DOLOMITE; argillaceous; dark gray; vuggy; very fine grained (crystalline); fresh to slightly weathered; moderately strong; moderately hard; (Salina Group - Unit F). 0°,B,Cl,Pa,Pl,SR @ 137.2', 137.3', 137.5' 40°,J,Ca,Pa,Pl,SR @ 138.3-138.5'	
							138	442	138.5 CLAYSTONE; based on televiewer log; (Salina Group - Unit F).	
			139.0				139	441		
HQ	23	2.5	0.0	0.0	0	0	140	440		
							141	439		
			141.5				142	438		
HQ	24	2.5	1.0	0.0	40	0	143	437	dolomite fragments; dark grayish brown; very fine grained (crystalline); fresh; strong; hard @ 142.3-143.3'	
			144.0				144	436		
HQ	25	2.5	0.6	0.0	24	0	145	435	145.0 DOLOMITE; greenish gray; micritic to very fine grained (crystalline); fresh; strong; hard; (Salina Group - Unit F). 90°,J,Cl,Pa,Pl,SR @ 145.1-145.3'	
							146	434	146.1 CLAYSTONE; based on televiewer log; (Salina Group - Unit F).	
			146.5				147	433	147.0 CLAYSTONE; dolomitic; gray; highly weathered; very weak; low hardness; (Salina Group - Unit F).	
HQ	26	2.5	1.6	0.0	64	0	148	432	dolomite fragments; argillaceous; gray; very fine grained (crystalline); fresh to slightly weathered; strong; moderately hard @ 147.1-148.2' 90°,J,Ca/Cl,Pa,Pl,SR @ 148.1-148.3' 40°,J,Ca/Cl,Pa,Pl,SR @ 148.3-148.5' 70°,J,Ca/Cl,Fi,Pl,SR @ 148.3-148.5' 80°,J,Cl,Fi,Pl,SR @ 149.0-149.4'	
			149.0				149	431	dolomite; argillaceous; gray; micritic; slightly weathered; moderately strong; moderately hard @	
							150			

BLACK & VEATCH

BORING LOG

BORING NO. RB-C4

CLIENT	PROJECT	PROJECT NO.
Detroit Edison	Fermi 3 COL Application	147483

PROJECT LOCATION	COORDINATES	GROUND ELEVATION (DATUM)	TOTAL DEPTH
Monroe, MI	N 6188.9' E 4448.8'	580.2 ft (NAVD 88)	271.8 (feet)

SURFACE CONDITIONS	COORDINATE SYSTEM	DATE START	DATE FINISHED
Gravel parking lot near field	Plant	06/14/07	07/13/07

LOGGED BY	CHECKED BY	APPROVED BY
TB Bonnie/Grainger/Mass	TB for Dogbey/Mass	Meyer

SAMPLING							CORING									
SAMPLE TYPE	SAMPLE NUMBER	SET 6 INCHES	2ND 6 INCHES	3RD 6 INCHES	N VALUE	SAMPLE RECOVERY	CORE SIZE	RUN NUMBER	RUN LENGTH	RUN RECOVERY	RQD RECOVERY	PERCENT RECOVERY	RQD	DEPTH (FEET)	SAMPLE TYPE	ELEVATION (FEET)	GRAPHIC LOG	CLASSIFICATION OF MATERIALS	REMARKS
							HQ	27	2.5	2.1	0.8	84	32	150		430		149.0-149.4', 149.7-149.9'	
																		149.9	
																		BRECCIA - dolomite clasts in a poorly indurated claystone matrix: claystone matrix; dolomitic; gray; moderately weathered; weak; moderately hard; w/ angular clasts of dolomite; gray; micritic; slightly weathered; strong; hard; (Salina Group - Unit F).	Core loss @ 151.1-151.5'.
														151		429			
										151.5									
							HQ	28	2.5	1.8	0.0	72	0	152		428		dolomite band; gray; very fine grained; slightly weathered; strong; hard @ 150.5-150.6'	
																		dark gray @ 150.6-151.1'	
														153		427		dolomite; vuggy @ 151.9-152.2', 152.9-153.2'	
																		70°,J,Cl,Pa,Pl,SR @ 152.0-152.2'	
																		dolomite band; argillaceous; dark gray; moderately weathered; moderately strong; moderately hard @ 152.5-152.7'	Core loss @ 153.2-154.0'.
														154		426		90°,J,Ca,Pa,Pl,R @ 152.9-153.2'	Core box #8 starts @ 154.0'. Water level @ 21.4' prior to drilling on 07/10/07. Core loss throughout @ 154.0-161.5'.
										154.0								highly fractured @ 154.0-157.3'	
														155		425		grades dark gray; weak; low hardness @ 154.0'	
														156		424			
							HQ	29	5.0	1.1	0.0	22	0						
														157		423			
														158		422			
														159		421			
										159.0								claystone & sand; highly fractured; w/angular & subangular dolomite fragments @ 159.5-160.9'	
														160		420			
							HQ	30	2.5	1.4	0.0	56	0	161		419			
																		161.5	
										161.5								Poorly graded SAND (SP) - About 95% medium sand; about 5% low plasticity, low toughness, slow dilatancy, low to medium dry strength fines; bluish gray; loose; moist; strong reaction w/HCl; weak silt/ clay cementation; grades coarser w/depth in layer; (Salina Group - Unit F).	
														162		418			
							HQ	31	2.5	2.5	1.0	100	40	163		417			
																		162.8	
																		CLAYSTONE; dolomitic; bluish gray; highly weathered; very weak; low hardness; (Salina Group - Unit F).	
														164		416			Core loss @ 164.0-164.4'.
										164.0								163.3	
																		CLAYSTONE; brecciated, broken; w/highly fractured dolomite partings; (Salina Group - Unit F).	
														165					

BLACK & VEATCH

BORING LOG

BORING NO. RB-C4

CLIENT	PROJECT	PROJECT NO.
Detroit Edison	Fermi 3 COL Application	147483

PROJECT LOCATION	COORDINATES	GROUND ELEVATION (DATUM)	TOTAL DEPTH
Monroe, MI	N 6188.9' E 4448.8'	580.2 ft (NAVD 88)	271.8 (feet)

SURFACE CONDITIONS	COORDINATE SYSTEM	DATE START	DATE FINISHED
Gravel parking lot near field	Plant	06/14/07	07/13/07

LOGGED BY	CHECKED BY	APPROVED BY
TB Bonnie/Grainger/Mass	TB Dogbey/Mass	Meyer

SAMPLING							CORING									
SAMPLE TYPE	SAMPLE NUMBER	SET 6 INCHES	2ND 6 INCHES	3RD 6 INCHES	N VALUE	SAMPLE RECOVERY	CORE SIZE	RUN NUMBER	RUN LENGTH	RUN RECOVERY	RQD RECOVERY	PERCENT RECOVERY	RQD	DEPTH (FEET)	SAMPLE TYPE	ELEVATION (FEET)	GRAPHIC LOG	CLASSIFICATION OF MATERIALS	REMARKS
							HQ	32	2.5	2.1	0.0	84	0	165		415		dolomite band; gray; very fine grained; fresh; strong; moderately hard @ 163.8-164.0'	
																		164.4	
														166		414		Silty SAND (SM) - About 85% fine sand; about 15% low plasticity, low toughness, slow dilatancy, low dry strength fines; bluish gray; loose; moist; strong reaction w/HCl; weak silt/clay cementation; grades coarser w/depth in layer; (Salina Group - Unit F).	Core barrel jammed @ 166.2'.
										166.5				167		413		166.0	
							HQ	33	2.5	1.5	0.0	60	0	168		412		CLAYSTONE; dolomitic; brecciated, broken; greenish gray; highly weathered; weak; low hardness; w/highly fractured dolomite partings; (Salina Group - Unit F). silty sand parting @ 166.2-166.3'	
																		167.0	
														169		411		DOLOMITE; argillaceous; greenish gray; very fine grained; fresh; strong; moderately hard; highly fractured; (Salina Group - Unit F). 90°,J,Cl,Pa,Pl,SR @ 167.8-168.0'	No recovery from run HQ-34 after two attempts.
										169.0								168.5	
							HQ	34	2.5	0.0	0.0	0	0	170		410		CLAYSTONE; dolomitic; brecciated, broken; greenish gray; highly weathered; weak; low hardness; w/highly fractured dolomite partings; (Salina Group - Unit F).	
														171		409			
										171.5				172		408			Core loss throughout @ 171.5-174.0'. Drill chatter @ 172.0'.
							HQ	35	2.5	0.5	0.0	20	0					172.7	
														173		407		BRECCIA - dolomite clasts in a poorly indurated claystone matrix: claystone matrix; dark gray; fresh; weak; moderately strong; moderately hard; w/angular clasts of dolomite; gray; very fine grained; slightly weathered; strong; hard; (Salina Group - Unit F). dolomite band; argillaceous; gray; fresh; moderately strong; moderately hard @ 172.9-173.0'	
										174.0				174		406			Soft drilling; washout @ < 0.5' intervals @ 174.0-179.0'. Drill chatter @ 174.0'. Drill chatter @ 175.0'.
							HQ	36	2.5	0.0	0.0	0	0	175		405			
														176		404			
										176.5				177		403			Soft drilling; washout @ < 0.5' intervals @ 176.5-179.0'.
							HQ	37	2.5	0.0	0.0	0	0	178		402			
										179.0				179		401		dolomite fragments; some vuggy; gray and brown; micritic; fresh to slightly weathered; moderately strong; moderately hard to hard @ 179.0-181.3'	Core loss @ 179.0-181.3'.
														180					

BLACK & VEATCH

BORING LOG

BORING NO. RB-C4

CLIENT	PROJECT	PROJECT NO.
Detroit Edison	Fermi 3 COL Application	147483

PROJECT LOCATION	COORDINATES	GROUND ELEVATION (DATUM)	TOTAL DEPTH
Monroe, MI	N 6188.9' E 4448.8'	580.2 ft (NAVD 88)	271.8 (feet)

SURFACE CONDITIONS	COORDINATE SYSTEM	DATE START	DATE FINISHED
Gravel parking lot near field	Plant	06/14/07	07/13/07

LOGGED BY	CHECKED BY	APPROVED BY
Bonnie/Grainger/Mass	Dogbey/Mass	Meyer

SAMPLING							CORING									
SAMPLE TYPE	SAMPLE NUMBER	SET 6 INCHES	2ND 6 INCHES	3RD 6 INCHES	N VALUE	SAMPLE RECOVERY	CORE SIZE	RUN NUMBER	RUN LENGTH	RUN RECOVERY	RQD RECOVERY	PERCENT RECOVERY	RQD	DEPTH (FEET)	SAMPLE TYPE	ELEVATION (FEET)	GRAPHIC LOG	CLASSIFICATION OF MATERIALS	REMARKS
							HQ	38	2.5	1.2	0.0	48	0	180		400		dolomite fragments; argillaceous; dark bluish gray; very fine grained; fresh; strong; moderately hard @ 181.3-181.5'	Core loss @ 181.5-187.9'.
							HQ	39	2.5	181.5 0.0	0.0	0	0	181 182 183		399 398 397			
							HQ	40	2.5	184.0 0.8	0.0	32	0	184 185 186		396 395 394		dolomite fragments; argillaceous; greenish gray; some pitted; micritic; fresh; strong; moderately hard; highly fractured @ 184.9-185.7'	Drill chatter @ 184.5'.
							HQ	41	2.5	186.5 1.1	0.5	44	20	187 188		393 392		highly fractured zone; angular dolomite fragments @ 187.9-188.3'	
							HQ	42	2.5	189.0 1.1	0.0	44	0	189 190 191		391 390 389		188.3 BRECCIA - limestone clasts in a poorly to well indurated claystone matrix: claystone matrix; dolomitic; dark bluish gray; slightly to moderately weathered; moderately strong; moderately hard; w/ angular clasts of limestone; gray; vuggy; micritic; slightly to moderately weathered; strong; hard; (Salina Group - Unit F). highly fractured @ 189.0-190.9' grades w/fragments of angular dolomite @ 190.9-191.3'	Core loss @ 189.0-190.9'.
							HQ	43	2.5	191.5 2.5	1.0	100	40	192 193 194		388 387 386		dolomite; argillaceous; very dark gray; micritic; fresh; strong; moderately hard @ 191.3-191.6' 90°,J,Ca,Pa,Pl,SR @ 191.3-191.6' claystone band; dolomitic; gray; highly weathered; very weak; low hardness @ 191.6-191.8' 192.1 BRECCIA - limestone & dolomite clasts in a poorly indurated claystone matrix: claystone matrix; dark gray; slightly weathered; moderately strong; hard; w/ angular clasts of limestone & dolomite; (Salina Group - Unit F). some rounded, rip-up clasts of dolomite @ 192.1' moderately weathered; weak; low hardness @ 193.0-	Core box #9 starts @ 193.4'.
										194.0				195					

BLACK & VEATCH

BORING LOG

BORING NO. RB-C4

CLIENT	PROJECT	PROJECT NO.
Detroit Edison	Fermi 3 COL Application	147483

PROJECT LOCATION	COORDINATES	GROUND ELEVATION (DATUM)	TOTAL DEPTH
Monroe, MI	N 6188.9' E 4448.8'	580.2 ft (NAVD 88)	271.8 (feet)

SURFACE CONDITIONS	COORDINATE SYSTEM	DATE START	DATE FINISHED
Gravel parking lot near field	Plant	06/14/07	07/13/07

LOGGED BY	CHECKED BY	APPROVED BY
TB Bonnie/Grainger/Mass	TB for Dogbey/Mass	Meyer

SAMPLING							CORING									
SAMPLE TYPE	SAMPLE NUMBER	SET 6 INCHES	2ND 6 INCHES	3RD 6 INCHES	N VALUE	SAMPLE RECOVERY	CORE SIZE	RUN NUMBER	RUN LENGTH	RUN RECOVERY	RQD RECOVERY	PERCENT RECOVERY	RQD	DEPTH (FEET)	SAMPLE TYPE	ELEVATION (FEET)	GRAPHIC LOG	CLASSIFICATION OF MATERIALS	REMARKS
							HQ	44	2.5	1.6	0.8	64	32	195		385		193.4'	
																		193.9 — LIMESTONE; olive gray; vuggy; fine grained (crystalline); moderately weathered; strong; moderately hard; some shale/claystone partings at top; (Salina Group - Unit F).	Core loss @ 195.2-196.1'.
														196		384		dolomite; light brownish gray; micritic; fresh; strong; hard; some thin vertical banding @ 196.1-196.5'	
										196.5								claystone; gray; moderately weathered; weak; low hardness @ 196.5-196.8'	HQ-45: took three attempts to recover core. Core barrel jammed @ 197.0', 197.5'.
							HQ	45	2.5	2.5	0.5	100	20	197		383		dolomite band; light gray; micritic; fresh; strong; moderately hard @ 197.2-197.3'	
														198		382		30°,J,Ca,Fi,Pl,SR @ 197.5'	
																		60°,J,No,No,Pl,SR @ 198.0'	
										199.0				199		381			Core loss @ 199.0-200.9'.
														200		380			
														201		379			
							HQ	46	5.0	3.1	1.9	62	38					201.4 — DOLOMITE; argillaceous; gray; micritic; slightly weathered; strong; moderately hard; (Salina Group - Unit F).	
														202		378		claystone; dolomitic; gray; highly weathered; very weak; low hardness; convoluted contact w/ surrounding dolomite @ 201.8-202.2'	
														203		377		202.4 — BRECCIA - dolomite & limestone clasts in a well indurated claystone matrix: claystone matrix; bluish gray; slightly weathered; moderately strong; hard; w/ angular sand- & gravel-sized clasts of dolomite & limestone; (Salina Group - Unit F).	
										204.0				204		376		90°,J,Ca,Fi,Pl,SR @ 202.5-202.8'	Core loss @ 204.0-206.0'.
														205		375			
														206		374		claystone bands; gray; highly weathered; very weak; low hardness; some dilatancy @ about 206.0-206.1', 206.4-206.7', 207.1-207.5'	
							HQ	47	5.0	3.1	1.1	62	22	207		373		207.5 — LIMESTONE; gray; vuggy; fine grained (crystalline); moderately weathered; strong; hard; (Salina Group - Unit F).	
														208		372			
										209.0				209		371		50°,J,No,No,Pl,R @ 209.3-209.5'	
														210					

BLACK & VEATCH

BORING LOG

BORING NO. RB-C4

CLIENT	PROJECT	PROJECT NO.
Detroit Edison	Fermi 3 COL Application	147483

PROJECT LOCATION	COORDINATES	GROUND ELEVATION (DATUM)	TOTAL DEPTH
Monroe, MI	N 6188.9' E 4448.8'	580.2 ft (NAVD 88)	271.8 (feet)

SURFACE CONDITIONS	COORDINATE SYSTEM	DATE START	DATE FINISHED
Gravel parking lot near field	Plant	06/14/07	07/13/07

LOGGED BY	CHECKED BY	APPROVED BY
TB Bonnie/Grainger/Mass	TB for Dogbey/Mass	Meyer

SAMPLING							CORING									
SAMPLE TYPE	SAMPLE NUMBER	SET 6 INCHES	2ND 6 INCHES	3RD 6 INCHES	N VALUE	SAMPLE RECOVERY	CORE SIZE	RUN NUMBER	RUN LENGTH	RUN RECOVERY	RQD RECOVERY	PERCENT RECOVERY	RQD	DEPTH (FEET)	SAMPLE TYPE	ELEVATION (FEET)	GRAPHIC LOG	CLASSIFICATION OF MATERIALS	REMARKS
														210		370		mottled w/dolomite @ 209.9-210.1'	
																		210.1	
																		DOLOMITE; grayish brown; micritic; fresh; very strong; moderately hard; w/fossils (ostracodes); (Salina Group - Unit F).	
														211		369		0°,B/J,Ca,Pa,Pl,SR @ 210.1'	
HQ	48	5.0	5.0	3.2	100	64												0°,B/J,Ca,Fi,Pl,SR @ 210.5', 210.6', 210.7', 210.8'	
														212		368		mottled w/limestone @ 210.8-210.9'	
																		80°,J,Ca,Fi,WA,SR @ 211.1-211.5'	
														213		367		stylolites @ 211.8'	Core box #10 starts @ 212.2'.
																		claystone bands; greenish gray; highly weathered; weak; low hardness @ 212.8-212.9', 213.4-213.6'	
																		90°,J,Ca,Fi,Pl,SR @ 212.9-213.4'	
														214		366		214.0	
			214.0															LIMESTONE; dark olive gray; vuggy; very fine to fine grained (crystalline); moderately weathered; strong; hard; no fossils; (Salina Group - Unit F).	
														215		365		50°,J,Ca,Fi,Pl,SR @ 214.0-214.1'	
																		214.5	
																		DOLOMITE; grayish brown; micritic; fresh; very strong; moderately hard; w/fossils (ostracodes); (Salina Group - Unit F).	
														216		364		30°,J,Ca,Pa,Pl,SR @ 214.7-214.9'	
HQ	49	5.0	5.0	2.6	100	52												214.9	
																		LIMESTONE; dark olive gray; vuggy; very fine to fine grained (crystalline); moderately weathered; strong; hard; no fossils; (Salina Group - Unit F).	
														217		363		215.6	
																		DOLOMITE; grayish brown; micritic; fresh; very strong; moderately hard; w/fossils (ostracodes); (Salina Group - Unit F).	
														218		362		20°,J,Ca,Fi,Pl,SR @ 216.2'	
																		grades light gray @ 216.5'	
			219											219		361		mottled w/limestone @ 217.0-217.1'	
																		217.7	
																		LIMESTONE; dark olive gray; vuggy; very fine to fine grained (crystalline); moderately weathered; strong; hard; no fossils (Salina Group - Unit F).	
														220		360		218.3	
																		DOLOMITE; argillaceous; light brownish gray; micritic; fresh; strong; hard; (Salina Group - Unit F).	
														221		359		mottled w/limestone @ 218.3-218.7'	
HQ	50	5.0	4.8	1.6	96	32												219.2	
																		SHALE; light gray; fine grained; extremely weathered; very weak; friable; some dilatancy; convoluted base contact; (Salina Group - Unit F).	
														222		358		219.7	
																		DOLOMITE; argillaceous; light brownish gray; micritic; fresh; strong; hard; (Salina Group - Unit F).	
														223		357		claystone; dark gray; highly weathered; very weak; low hardness @ 220.1-220.5'	
																		220.5	
																		LIMESTONE; dark gray; vuggy; very fine grained; moderately weathered; strong; hard; (Salina Group - Unit F).	
			224.0											224		356		110°,J,Ca,Pa,Pl,SR @ 220.8-221.4'	
																		70°,J,Ca,Pa,Pl,SR @ 221.4-221.7'	
														225					

BLACK & VEATCH

BORING LOG

BORING NO. RB-C4

CLIENT	PROJECT	PROJECT NO.
Detroit Edison	Fermi 3 COL Application	147483

PROJECT LOCATION	COORDINATES	GROUND ELEVATION (DATUM)	TOTAL DEPTH
Monroe, MI	N 6188.9' E 4448.8'	580.2 ft (NAVD 88)	271.8 (feet)

SURFACE CONDITIONS	COORDINATE SYSTEM	DATE START	DATE FINISHED
Gravel parking lot near field	Plant	06/14/07	07/13/07

LOGGED BY	CHECKED BY	APPROVED BY
TB for Bonnie/Grainger/Mass	EB for TB for Dogbey/Mass	Meyer

SAMPLING							CORING									
SAMPLE TYPE	SAMPLE NUMBER	SET 6 INCHES	2ND 6 INCHES	3RD 6 INCHES	N VALUE	SAMPLE RECOVERY	CORE SIZE	RUN NUMBER	RUN LENGTH	RUN RECOVERY	RQD RECOVERY	PERCENT RECOVERY	RQD	DEPTH (FEET)	SAMPLE TYPE	ELEVATION (FEET)	GRAPHIC LOG	CLASSIFICATION OF MATERIALS	REMARKS
							HQ	51	5.0	3.4	0.6	68	12	225		355		222.0 DOLOMITE; light brownish gray; micritic; fresh; very strong; moderately hard; (Salina Group - Unit F). claystone; dark gray; highly weathered; very weak; low hardness @ 224.0-224.3' 224.3 BRECCIA - dolomite & limestone clasts in a well indurated claystone matrix: claystone matrix; bluish gray; slightly weathered; moderately strong; hard; w/ angular clasts of dolomite & limestone; (Salina Group - Unit F). 227.0 DOLOMITE; argillaceous; olive gray; micritic; fresh; strong; moderately hard; (Salina Group - Unit F). 70°,J,Ca,Pa,Pl,SR @ 227.0-227.4' 90°,J,Ca,Pa,Pl,SR @ 227.0-227.4' 130°,J,Cl,Pa,Pl,SR @ 227.1-227.3' 70°,J,Ca,Pa,Pl,SR @ 227.5-227.8' grades very dark greenish gray @ 227.6' 30°,J,Cl,Pa,Pl,SR @ 228.8'	Core loss @ 225.4-227.0'. Core box #11 starts @ 227.5'.
														226		354			
														227		353			
														228		352			
										229.0				229		351		229.0 CLAYSTONE; brecciated; dark gray; highly weathered; very weak; low hardness; some dilatancy; hydrocarbon odor; (Salina Group - Unit F).	PP = 0.1 TSF TV = 0.5 TSF @ 228.9-232.7'. Water level @ 20.1' prior to drilling on 07/12/07. Discrete sample 11-A collected @ 229.0-232.7'.
HQ	52	5.0	2.4	0.4	48	8								230		350			
														231		349			
														232		348			
														233		347		233.0 DOLOMITE; argillaceous; pale brown; micritic; fresh; strong; hard; (Salina Group - Unit F). 20°,J,Cl,Fi,Pl,SR @ 233.0' 50°,J,Ca,Fi,Pl,SR @ 233.2-233.4' 45°,J,Cl,Fi,Pl,SR @ 233.7-233.8' 130°,J,Cl,Fi,Pl,SR @ 233.7-233.8'; banding radiating outward from joint; banding offset in smaller cracks @ 233.6-233.8'	Discrete sample 11-B collected @ 232.7-233.0' for chemical analysis. Discrete sample 11-C collected @ 234.0-237.7'. PP = 1.3 TSF TV = 1.7 TSF @ 234.0-237.7'.
										234.0				234		346			
														235		345			
														236		344		233.8 CLAYSTONE; brecciated; dark gray; highly weathered; very weak; low hardness; some dilatancy; hydrocarbon odor; (Salina Group - Unit F).	Core loss @ 234.0-236.9'.
HQ	53	5.0	2.1	1.2	42	24								237		343			
														238		342		dolomite fragments; argillaceous; gray; slightly weathered; strong; moderately hard; highly fractured @ 238.2-239.0' 70°,J,Cl,Pa,Pl,SR @ 238.5-238.8' 110°,J,Cl,Pa,Pl,SR @ 238.8'	Discrete sample 11-D collected @ 237.7-238.2' for chemical analysis. Core loss @ 239.0-239.6'.
										239.0				239		341		239.6 DOLOMITE; light gray; micritic; fresh to slightly	
														240					

BLACK & VEATCH

BORING LOG

BORING NO. RB-C4

CLIENT	PROJECT	PROJECT NO.
Detroit Edison	Fermi 3 COL Application	147483

PROJECT LOCATION	COORDINATES	GROUND ELEVATION (DATUM)	TOTAL DEPTH
Monroe, MI	N 6188.9' E 4448.8'	580.2 ft (NAVD 88)	271.8 (feet)

SURFACE CONDITIONS	COORDINATE SYSTEM	DATE START	DATE FINISHED
Gravel parking lot near field	Plant	06/14/07	07/13/07

LOGGED BY	CHECKED BY	APPROVED BY
TB Bonnie/Grainger/Mass	TB for Dogbey/Mass	Meyer

SAMPLING							CORING										
SAMPLE TYPE	SAMPLE NUMBER	SET 6 INCHES	2ND 6 INCHES	3RD 6 INCHES	N VALUE	SAMPLE RECOVERY	CORE SIZE	RUN NUMBER	RUN LENGTH	RUN RECOVERY	RQD RECOVERY	PERCENT RECOVERY	RQD	DEPTH (FEET)	SAMPLE TYPE	ELEVATION (FEET)	GRAPHIC LOG

CLASSIFICATION OF MATERIALS	REMARKS
weathered; very strong; moderately hard to hard; (Salina Group - Unit E). 0°,B,UK,Pa,Pl,SR @ 239.9' argillaceous; highly fractured @ 240.1-240.7' claystone; brecciated; gray; highly weathered; very weak; low hardness @ 240.3-240.5' 30°,J,Ca,Pa,Pl,SR @ 240.9-241.0', 241.3-241.4', 242.0-242.1' 0°,B,UK,Pa,Pl,SR @ 241.1', 241.6', 241.7', 241.9' very closely spaced stylolites; highly fractured @ 241.5-241.9'	
242.5 DOLOMITE; light gray; pitted/vuggy; micritic; fresh; very strong; hard; w/fossils (ostracodes); fossils dissolve to form small pits; (Salina Group - Unit E). very closely spaced stylolites @ 242.5' 0°,B,No,No,Pl,SR @ 243.2', 244.6'	
30°,J,Ca,Pa,Pl,SR @ 245.4-245.6', 245.6-245.7'	
50°,J,Ca,Pa,Pl,SR @ 246.2-246.3' claystone band; 0.4" thick @ 246.5'	
0°,B,No,No,Pl,SR @ 247.7' gypsum parting; white; micritic; fresh; weak; low hardness @ 247.9' 10°,J,Gy,Fi,Pl,S @ 248.0-248.1' stylolites @ 248.2' highly fractured @ 248.8-249.0'	Core box #12 starts @ 246.7'. Core barrel jammed @ 246.7'. Drill bit teeth stripped @ 246.7'. Pulled casing & core barrel; replaced bit. Partial bit recovery in HQ-56.
many fossils replaced w/calcite or gypsum lenses @ 249.5-249.6', 250.1-250.2', 250.4-250.6' grades w/stylolites @ 249.9' 0°,B,No,No,Pl,SR @ 250.1', 250.4', 250.5' gypsum parting @ 250.4' grades light brownish gray @ 250.6'	Core loss @ 246.7-247.0'. Added sand to sharpen new drill bit @ 249.0'
20°,J,No,No,Pl,S @ 252.2'	
90°,J,VN,Ca,Fi,Pl @ 253.6-255.0'	Water level @ 20.7' prior to drilling on 07/13/07.
	Core loss @ 254.3-254.4'.

HQ	54	5.0	4.4	2.6	88	52								240		340	
														241		339	
														242		338	
														243		337	
			244.0											244		336	
HQ	55	2.7	2.6	1.9	96	70								245		335	
														246		334	
			246.7											247		333	
HQ	56	2.3	2.3	0.7	100	30								248		332	
			249.0											249		331	
														250		330	
														251		329	
HQ	57	5.0	5.0	4.6	100	92								252		328	
														253		327	
														254		326	
			254.0											255			

BLACK & VEATCH

BORING LOG

BORING NO. RB-C4

CLIENT	PROJECT	PROJECT NO.
Detroit Edison	Fermi 3 COL Application	147483

PROJECT LOCATION	COORDINATES	GROUND ELEVATION (DATUM)	TOTAL DEPTH
Monroe, MI	N 6188.9' E 4448.8'	580.2 ft (NAVD 88)	271.8 (feet)

SURFACE CONDITIONS	COORDINATE SYSTEM	DATE START	DATE FINISHED
Gravel parking lot near field	Plant	06/14/07	07/13/07

LOGGED BY	CHECKED BY	APPROVED BY
TB Bonnie/Grainger/Mass	TB for Dogbey/Mass	Meyer

SAMPLING: SAMPLE TYPE	SAMPLE NUMBER	SET 6 INCHES	2ND 6 INCHES	3RD 6 INCHES	N VALUE	SAMPLE RECOVERY

CORING: CORE SIZE	RUN NUMBER	RUN LENGTH	RUN RECOVERY	RQD RECOVERY	PERCENT RECOVERY	RQD
HQ	58	5.0	4.9	2.9	98	58
HQ	59	5.0	5.0	4.6	100	92
HQ	60	5.3	5.3	4.5	100	85

DEPTH (FEET)	ELEVATION (FEET)	CLASSIFICATION OF MATERIALS	REMARKS
255	325	highly fractured @ 255.0-256.1'	
256	324	256.0 — DOLOMITE; gray; micritic; fresh; very strong; very hard; w/gypsum, shale, & anhydrite partings that have a banded appearance; gypsum & anhydrite partings: white; micritic; fresh; moderately strong; moderately hard; shale partings: very dark gray; platy; fissile; very fine grained; fresh; moderately strong; moderately hard; partings/bands 0.1-1.2"; (Salina Group - Unit E). 0°,B,UK,Fi,Pl,SR @ 256.3', 257.6', 257.8', 259.1'	
257	323		
258	322		
259	321	259.0 — grades w/interbedded gypsum w/convoluted boundaries @ 259.6'	
260	320	claystone band; dark gray; highly weathered; very weak; low hardness; hydrocarbon odor @ 260.1-260.2'	
261	319		Discrete sample 12-A collected @ 261.0-261.2' for chemical analysis.
262	318	brecciated dolomite & claystone @ 261.8-262.0'	
263	317	claystone band; light gray; highly weathered; very weak; low hardness; hydrocarbon odor @ 262.5-262.7' 30°,J,Cl,Pa,Pl,SR @ 262.8-262.9'	Discrete sample 12-B collected @ 262.5-262.7' for chemical analysis. Core box #13 starts @ 262.7'.
264	316	263.2 — DOLOMITE; dark grayish brown; pitted; micritic; fresh to slightly weathered; strong; hard; w/gypsum partings & bands (0.1-0.6"); (Salina Group - Unit E). 0°,B,Cl,Pa,Pl,SR @ 264.4'	
265	315	264.8 — DOLOMITE; argillaceous; very dark gray, banded; very fine grained (crystalline); fresh; strong; moderately hard; few gypsum partings; some shale partings; (Salina Group - Unit E). 0°,B,Cl,Pa,Pl,SR @ 265.2', 265.5'	
266	314	grades w/very dark gray; platy; very fine grained; fresh; moderately strong; moderately hard shale bands @ 265.9'	
267	313	266.2 — DOLOMITE; dark grayish brown; micritic; fresh; strong; moderately hard; w/convoluted gypsum partings, bands, & beds up to 0.4' thick; gypsum partings/bands/beds; white; micritic; crystalline; fresh; weak; moderately hard; (Salina Group - Unit E).	
268	312		
269	311	thickest gypsum bed @ 268.9-269.3'	
270		269.3	

BLACK & VEATCH

BORING LOG

BORING NO. RB-C4

CLIENT	PROJECT	PROJECT NO.
Detroit Edison	Fermi 3 COL Application	147483

PROJECT LOCATION	COORDINATES	GROUND ELEVATION (DATUM)	TOTAL DEPTH
Monroe, MI	N 6188.9' E 4448.8'	580.2 ft (NAVD 88)	271.8 (feet)

SURFACE CONDITIONS	COORDINATE SYSTEM	DATE START	DATE FINISHED
Gravel parking lot near field	Plant	06/14/07	07/13/07

LOGGED BY	CHECKED BY	APPROVED BY
TB for Bonnie/Grainger/Mass	TB for Dogbey/Mass	Meyer

SAMPLING							CORING									
SAMPLE TYPE	SAMPLE NUMBER	SET 6 INCHES	2ND 6 INCHES	3RD 6 INCHES	N VALUE	SAMPLE RECOVERY	CORE SIZE	RUN NUMBER	RUN LENGTH	RUN RECOVERY	RQD RECOVERY	PERCENT RECOVERY	RQD	DEPTH (FEET)	SAMPLE TYPE	ELEVATION (FEET)	GRAPHIC LOG	CLASSIFICATION OF MATERIALS	REMARKS
							HQ	61	2.5	2.4	2.4	96	96	270		310			
														271		309			
														272		308			Bottom of boring @ 271.8'. Water level @ 21.2' @ completion of drilling. Backfilled w/ bentonite chips on 09/19/07.
														273		307			
														274		306			
														275		305			
														276		304			
														277		303			
														278		302			
														279		301			
														280		300			
														281		299			
														282		298			
														283		297			
														284		296			
														285					

4/25/2008 6:35 PM DTE - Fermi 3 Geotech

BLACK & VEATCH

BORING LOG

BORING NO. RB-C4a

SHEET 1 OF 1

CLIENT	PROJECT	PROJECT NO.
Detroit Edison	Fermi 3 COL Application	147483

PROJECT LOCATION	COORDINATES	GROUND ELEVATION (DATUM)	TOTAL DEPTH
Monroe, MI	N 6193.4' E 4445.3'	580.2 ft (NAVD 88)	6.0 (feet)

SURFACE CONDITIONS	COORDINATE SYSTEM	DATE START	DATE FINISHED
Gravel parking lot	Plant	06/13/07	06/14/07

LOGGED BY	CHECKED BY	APPROVED BY
Bonnie TB	EB for Dogbey/Bonnie TB	EM Meyer

SAMPLING: SAMPLE TYPE	SAMPLE NUMBER	SET 6 INCHES	2ND 6 INCHES	3RD 6 INCHES	N VALUE	SAMPLE RECOVERY	CORING: CORE SIZE	RUN NUMBER	RUN LENGTH	RUN RECOVERY	RQD RECOVERY	PERCENT RECOVERY	RQD	DEPTH (FEET)	SAMPLE TYPE	ELEVATION (FEET)	GRAPHIC LOG	CLASSIFICATION OF MATERIALS	REMARKS
														0		580		Poorly graded COBBLES - About 90% angular to subangular cobbles w/max. size 9"; about 5% sand; about 5% fines; dark reddish brown; dry; weak reaction w/ HCl; homogeneous; (Fill).	Boring advanced by vacuum excavation.
														1		579			
										2.0				2		578			Below 2.0' continued w/4" ID sonic continuous sampler w/ nominal 6" temporary steel casing advanced w/sampler.
S	1					NR								3		577			
														4		576			
														5		575			@ about 6' unidentified material & strange sound was noticed; re-started vacuum excavation. Could not determine source of strange sound. Boring was abandoned. New boring (RB-C4) started @ 3.5' east & 4.5' south of RB-C4a.
														6		574			Bottom of boring @ 6.0'. Boring dry @ completion. Backfilled with cuttings on 06/14/07.
														7		573			
														8		572			
														9		571			
														10		570			
														11		569			
														12		568			
														13		567			
														14		566			
														15					

5/6/2008 4:16 PM DTE - Fermi 3 Geotech

BLACK & VEATCH

BORING LOG

BORING NO. RB-C5

SHEET 1 OF 19

CLIENT	PROJECT	PROJECT NO.
Detroit Edison	Fermi 3 COL Application	147483

PROJECT LOCATION	COORDINATES	GROUND ELEVATION (DATUM)	TOTAL DEPTH
Monroe, MI	N 6192.8' E 4525.7'	580.6 ft (NAVD 88)	270.5 (feet)

SURFACE CONDITIONS	COORDINATE SYSTEM	DATE START	DATE FINISHED
Level, gravel parking area	Plant	06/14/07	06/28/07

LOGGED BY	CHECKED BY	APPROVED BY
Grainger/Bonnie TB	Dogbey/Bonnie TB	Meyer EM

SAMPLING: SAMPLE TYPE	SAMPLE NUMBER	SET 6 INCHES	2ND 6 INCHES	3RD 6 INCHES	N VALUE	SAMPLE RECOVERY	CORING: CORE SIZE	RUN NUMBER	RUN LENGTH	RUN RECOVERY	RQD RECOVERY	PERCENT RECOVERY	RQD	DEPTH (FEET)	SAMPLE TYPE	ELEVATION (FEET)	GRAPHIC LOG	CLASSIFICATION OF MATERIALS	REMARKS
														0		580		Silty COBBLES with Sand - About 60% angular; elongated; very hard cobbles w/max. size 12"; about 20% fine to coarse, rounded, hard sand; about 20% fines (silt); dark gray; loose; strong reaction w/HCl; homogeneous; (Fill).	Boring advanced w/vacuum excavation.
														1		579			
														2		578			
														3		577			
S	1									3.5			NR	4		576			Discrete sample S1 collected.
														5		575			Vacuum excavation was down to 5.5'; hole collapsed to 3.5'. Below 3.5' continue w/4" ID continuous sonic sampler w/ nominal 6" temporary steel casing advanced w/sampler.
S	2									5.0			NR	6		574			
														7		573			
														8		572			
														9		571			
										10.0				10		570			Discrete sample S2 collected.
														10.8					
S	3												NR	11		569		Fat CLAY (CH) - About 95% high plasticity, high toughness, no dilatancy, high dry strength fines; about 5% fine sand; gray; firm; moist; no reaction w/HCl; laminated; (Lacustrine Deposit).	Discrete sample S3 collected.
														12		568			
														13		567			
										14.0				14		566			Below 14.0' continue w/NWJ rods &
														15					

4/29/2008 4:40 PM DTE - Fermi 3 Geotech

BLACK & VEATCH

BORING LOG

BORING NO. RB-C5
SHEET 2 OF 19

CLIENT	PROJECT	PROJECT NO.
Detroit Edison	Fermi 3 COL Application	147483

PROJECT LOCATION	COORDINATES		GROUND ELEVATION (DATUM)	TOTAL DEPTH
Monroe, MI	N 6192.8'	E 4525.7'	580.6 ft (NAVD 88)	270.5 (feet)

SURFACE CONDITIONS	COORDINATE SYSTEM	DATE START	DATE FINISHED
Level, gravel parking area	Plant	06/14/07	06/28/07

LOGGED BY	CHECKED BY	APPROVED BY
Grainger/Bonnie TB	Dogbey/Bonnie TB	Meyer EM

SAMPLING							CORING							DEPTH (FEET)	SAMPLE TYPE	ELEVATION (FEET)	GRAPHIC LOG	CLASSIFICATION OF MATERIALS	REMARKS
SAMPLE TYPE	SAMPLE NUMBER	SET 6 INCHES	2ND 6 INCHES	3RD 6 INCHES	N VALUE	SAMPLE RECOVERY	CORE SIZE	RUN NUMBER	RUN LENGTH	RUN RECOVERY	RQD RECOVERY	PERCENT RECOVERY	RQD						
														15		565			4½"tricone bit using bentonite mud as drilling fluid. SPT performed w/D-50 automatic hammer. Sample #4 was skipped in the numbering sequence.
TW	5					1.5								16		564			
														17		563		grades weak reaction w/HCl @ 17.0'	
														18		562			
																		18.5	
														19		561		Sandy Lean CLAY (CL) - About 69% LL=24, PL=14, slow dilatancy, high dry strength fines; about 31% fine to medium sand; dark grayish brown; hard; moist; strong reaction w/HCl; homogeneous; (Glacial Till).	
														20		560			
SPT	6	4	6	13	19	1.5								21		559			
														22		558			
														23		557			
														24		556			
																		24.0	
														25		555		Sandy Lean CLAY with Gravel (CL) - About 65% medium plasticity, medium toughness, no dilatancy, high dry strength fines; about 20% fine to coarse, angular to subrounded, hard sand; about 15% fine to medium, angular to subrounded, hard gravel; dark gray; very hard; moist; strong reaction w/HCl; homogeneous; (Glacial Till).	
TW	7					1.0								26		554		grades w/cobbles @ 26.5'	Thin wall sampler refusal @ 26.5'.
														27		553			
														28		552			
														29		551			
			29.0															29.0	
														30				DOLOMITE; crystalline; dark gray; micritic; fresh; very strong; very hard; w/stylolites; (Bass Islands Group).	Tricone refusal @ 29.0'.

4/29/2008 4:40 PM DTE - Fermi 3 Geotech

BLACK & VEATCH

BORING LOG

BORING NO. RB-C5
SHEET 3 OF 19

CLIENT	PROJECT	PROJECT NO.
Detroit Edison	Fermi 3 COL Application	147483

PROJECT LOCATION	COORDINATES	GROUND ELEVATION (DATUM)	TOTAL DEPTH
Monroe, MI	N 6192.8' E 4525.7'	580.6 ft (NAVD 88)	270.5 (feet)

SURFACE CONDITIONS	COORDINATE SYSTEM	DATE START	DATE FINISHED
Level, gravel parking area	Plant	06/14/07	06/28/07

LOGGED BY	CHECKED BY	APPROVED BY
Grainger/Bonnie TB	Dogbey/Bonnie TB	Meyer EM

SAMPLING							CORING									
SAMPLE TYPE	SAMPLE NUMBER	SET 6 INCHES	2ND 6 INCHES	3RD 6 INCHES	N VALUE	SAMPLE RECOVERY	CORE SIZE	RUN NUMBER	RUN LENGTH	RUN RECOVERY	RQD RECOVERY	PERCENT RECOVERY	RQD	DEPTH (FEET)	SAMPLE TYPE	ELEVATION (FEET)	GRAPHIC LOG	CLASSIFICATION OF MATERIALS	REMARKS
S	8												4	30		550			Below 29.0' continued w/4" ID sonic continuous sampler w/ nominal 6" temporary steel casing advanced w/sampler. Sonic core stored in box labeled S1. Set nominal 6" temporary steel casing to 33.4'. Below 34.0' continued w/ triple tube wire line core barrel w/diamond bit using water as drilling fluid. Core box #1 starts @ 34.0'. Water level @ 15.27' prior to drilling on 06/21/07.
														31		549			
														32		548			
														33		547			
			34.0											34		546		34.0	
HQ	1	1.5	1.1		0.75	73		50						35		545		DOLOMITE; crystalline; greenish gray; micritic; fresh; strong; hard; w/shale partings & stylolites; (Bass Islands Group). 0°,J,VN,No,No,PI,SR @ 34.7', 35.3'	
			35.5											36		544		0°,J,VN,UK,Pa,PI,SR @ 36.05',36.3',36.45'	
														37		543		70°,J,T,No,No,PI,R @ 36.8' 0°,J,VN,UK,Pa,PI,SR @ 37.1',37.6'	
HQ	2	5.0	5.0		2.8	100		56						38		542		60°,J,T,No,No,PI,SR @ 37.8-38.1' 0°,J,VN,UK,Pa,PI,SR @ 38.2',38.6' 90°,J,T,No,No,WA,SR @ 38.6-38.8'	
														39		541		0°,J,VN,UK,Pa,PI,SR @ 39.2'	
			40.5											40		540		90°,J,T,No,No,WA,SR @ 39.9-40.3' 0°,J,VN,UK,Pa,PI,SR @ 40.0',40.3'	
														41		539		40.8 DOLOMITE; grayish brown; micritic; fresh; strong; hard; w/shale partings & stylolites; (Bass Islands Group). 0°,J,VN,UK,Pa,PI,SR @ 41.1' 90°,J,T,No,No,WA,SR @ 41.9-42.1', 43.3-43.6'	
														42		538			
HQ	3	5.0	5.0		1.4	100		28						43		537		highly fractured @ 43.4-43.9' 0°,J,VN,UK,Pa,PI,SR @ 43.5', 43.6'	
														44		536		44.3 DOLOMITE; gray & black; mottled; micritic; fresh; strong; hard; (Bass Islands Group).	
														45					

BLACK & VEATCH

BORING LOG

BORING NO. RB-C5

CLIENT	PROJECT	PROJECT NO.
Detroit Edison	Fermi 3 COL Application	147483

PROJECT LOCATION	COORDINATES	GROUND ELEVATION (DATUM)	TOTAL DEPTH
Monroe, MI	N 6192.8' E 4525.7'	580.6 ft (NAVD 88)	270.5 (feet)

SURFACE CONDITIONS	COORDINATE SYSTEM	DATE START	DATE FINISHED
Level, gravel parking area	Plant	06/14/07	06/28/07

LOGGED BY	CHECKED BY	APPROVED BY
ECG for Grainger/Bonnie TB	EM for Dogbey/Bonnie TB	EM Meyer

SAMPLING

SAMPLE TYPE	SAMPLE NUMBER	SET 6 INCHES	2ND 6 INCHES	3RD 6 INCHES	N VALUE	SAMPLE RECOVERY

CORING

CORE SIZE	RUN NUMBER	RUN LENGTH	RUN RECOVERY	RQD RECOVERY	PERCENT RECOVERY	RQD
			45.5			
HQ	4	5.0	5.0	3.2	100	64
			50.5			
HQ	5	5.0	4.9	4.4	98	88
			55.5			
HQ	6	5.0	5.0	4.5	100	90

DEPTH (FEET): 45, 46, 47, 48, 49, 50, 51, 52, 53, 54, 55, 56, 57, 58, 59, 60

ELEVATION (FEET): 535, 534, 533, 532, 531, 530, 529, 528, 527, 526, 525, 524, 523, 522, 521

GRAPHIC LOG

CLASSIFICATION OF MATERIALS

shale parting @ 44.3'
highly fractured @ 44.3-45.0'
90°,J,T,No,No,Pl,SR @ 45.5-45.8'

45.8

0°,J,VN,No,No,WA,R @ 45.8', 46.2', 46.4'
DOLOMITE; crystalline; grayish brown; micritic; fresh; strong; hard; 5% vugs; (Bass Islands Group).

0°,J,VN,No,No,WA,R @ 47.0', 47.5', 47.9'
90°,J,T,No,No,Pl,SR @ 47.2-47.3'

0°,J,VN,No,No,WA,R @ 49.3', 49.6'

90°,J,T,No,No,Pl,SR @ 50.0-50.3'

50.3

DOLOMITE; crystalline; light brownish gray; micritic; fresh; strong; hard; parting w/stylolites; (Bass Islands Group).
90°,J,T,No,No,Pl,SR @ 50.5-50.6',50.7-51.1'
0°,J,VN,UK,Pa,WA,R @ 50.7'

51.2

DOLOMITE; argillaceous w/stylolites; (Bass Islands Group).
0°,J,VN,UK,Pa,WA,R @ 51.4', 51.5'

80°,J,T,No,No,Pl,SR @ 53.1-53.2'

53.5

DOLOMITE; crystalline; light brownish gray; micritic; fresh; strong; hard; parting w/stylolites; (Bass Islands Group).

54.3

BRECCIA; healed; light gray; coarse to fine grained; fresh; strong; hard; dolomite clasts & matrix; (Bass Islands Group).

0°,J,VN,UK,Pa,WA,R @ 56.0', 56.1'
50°,J,T,No,No,Pl,SR @ 56.25-56.35'

56.4

DOLOMITE; gray; micritic; fresh; strong; hard; (Bass Islands Group).

57.2

SHALE; very dark gray; fresh; weak; low hardness; (Bass Islands Group).

57.6

DOLOMITE; oolitic; light brownish gray; fresh; strong; hard; (Bass Islands Group).

0°,J,T,No,No,Pl,SR @ 58.9'

REMARKS

Core box #2 starts @ 45.5'. Water level @ 16.2' prior to drilling on 06/25/07.

Core box #3 starts @ 58.9'.

BLACK & VEATCH

BORING LOG

BORING NO. RB-C5

CLIENT	PROJECT	PROJECT NO.
Detroit Edison	Fermi 3 COL Application	147483

PROJECT LOCATION	COORDINATES	GROUND ELEVATION (DATUM)	TOTAL DEPTH
Monroe, MI	N 6192.8' E 4525.7'	580.6 ft (NAVD 88)	270.5 (feet)

SURFACE CONDITIONS	COORDINATE SYSTEM	DATE START	DATE FINISHED
Level, gravel parking area	Plant	06/14/07	06/28/07

LOGGED BY	CHECKED BY	APPROVED BY
Grainger/Bonnie TB	Dogbey/Bonnie TB	Meyer

SAMPLING							CORING							DEPTH (FEET)	SAMPLE TYPE	ELEVATION (FEET)	GRAPHIC LOG	CLASSIFICATION OF MATERIALS	REMARKS
SAMPLE TYPE	SAMPLE NUMBER	SET 6 INCHES	2ND 6 INCHES	3RD 6 INCHES	N VALUE	SAMPLE RECOVERY	CORE SIZE	RUN NUMBER	RUN LENGTH	RUN RECOVERY	RQD RECOVERY	PERCENT RECOVERY	RQD						
														60					
										60.5						520		20°,J,T,No,No,PI,SR @ 60.5-60.7'	
														61				61.1	
																519		DOLOMITE; gray & black; mottled; micritic; fresh; strong; hard; banded; (Bass Islands Group). 0°,J,VN,UK,Pa,WA,R @ 61.5', 61.8'	
														62				61.9 85°,J,VN,No,No,PI,R @ 61.9-63.4' SHALE; black; (Bass Islands Group).	
																518		62.1	
							HQ	7	5.0	5.0	2.9	100	58	63				DOLOMITE; light brownish gray; strong; hard; w/stylolites & shale partings; (Bass Islands Group). 0°,J,VN,UK,Pa,WA,R @ 62.6', 62.9'	
																517		63.2	
														64				BRECCIA, healed; light gray; coarse to fine grained; fresh; strong; hard; argillaceous dolomite clasts & matrix; (Bass Islands Group). 0°,J,VN,UK,Pa,WA,R @ 63.5'	
																516		63.8	
										65.5				65				DOLOMITE; gray; micritic; fresh; strong; hard; banded; w/stylolites & shale parting; convoluted bedding; (Bass Islands Group). 0°,J,N,Cl,Pa,WA,R @ 64.0' 20°,J,T,No,No,PI,SR @ 64.7-64.8' 0°,J,T,No,No,PI,SR @ 65.7', 66.1' highly fractured @ 66.5-67.0'	
																515			
														66					
																514			
														67				66.7	
							HQ	8	5.0	4.9	1.9	98	38					DOLOMITE; gray; micritic; fresh; strong; hard; banded; w/shale partings & stylolites; (Bass Islands Group). 10°,J,VN,UK,Pa,PI,SR @ 67.3' 0°,J,T,No,No,PI,SR @ 67.8', 68.1' highly fractured @ 68.5-70.0'	
														68		513			
																512			
														69					
																511			
														70					
										70.5						510			
														71				0°,J,T,No,No,PI,SR @ 71.0', 71.7' 10°,J,T,No,No,PI,SR @ 71.0'	
																509			
														72				0°,J,T,No,No,PI,SR @ 72.0'	
																508		60°,J,T,No,No,WA,R @ 72.5-73.0' 90°,J,T,No,No,PI,SR @ 72.8-73.0'	Core box #4 starts @ 72.6'.
							HQ	9	5.0	5.0	2.8	100	56	73					
																507			
														74					
																506		0°,J,T,No,No,PI,SR @ 74.4', 74.7', 74.8' 90°,J,N,Cl,Fi,WA,SR @ 74.5-76.1'	
														75					

BLACK & VEATCH

BORING LOG

BORING NO. RB-C5

CLIENT	PROJECT	PROJECT NO.
Detroit Edison	Fermi 3 COL Application	147483

PROJECT LOCATION	COORDINATES	GROUND ELEVATION (DATUM)	TOTAL DEPTH
Monroe, MI	N 6192.8' E 4525.7'	580.6 ft (NAVD 88)	270.5 (feet)

SURFACE CONDITIONS	COORDINATE SYSTEM	DATE START	DATE FINISHED
Level, gravel parking area	Plant	06/14/07	06/28/07

LOGGED BY	CHECKED BY	APPROVED BY
Grainger/Bonnie TB	Dogbey/Bonnie TB	Meyer

SAMPLING							CORING									
SAMPLE TYPE	SAMPLE NUMBER	SET 6 INCHES	2ND 6 INCHES	3RD 6 INCHES	N VALUE	SAMPLE RECOVERY	CORE SIZE	RUN NUMBER	RUN LENGTH	RUN RECOVERY	RQD RECOVERY	PERCENT RECOVERY	RQD	DEPTH (FEET)	SAMPLE TYPE	ELEVATION (FEET)	GRAPHIC LOG	CLASSIFICATION OF MATERIALS	REMARKS
														75					
										75.5				76		505			
														77		504		0°,J,VN,UK,Fi,Pl,SR @ 76.8', 77.7' 45°,J,T,No,No,Pl,R @ 76.9-77.1'	
														78		503			
							HQ	10	5.0	4.8	3.5	96	70	79		502			
														80		501		10°,J,T,No,No,WA,R @ 79.3'	
																		79.7 BRECCIA; healed; dolomite matrix; gray; fresh; strong; hard; w/clasts of light gray; fresh; strong; hard dolomite; (Bass Islands Group).	
										80.5				81		500			
														82		499		81.3 DOLOMITE; gray; micritic; fresh; strong; hard; banded; w/shale partings & stylolites; (Bass Islands Group). 0°,J,T,No,No,Pl,SR @ 82.2', 82.4'	
							HQ	11	5.0	5.0	3.2	100	64	83		498		10°,J,T,UK,Pa,SR @ 82.9'	
														84		497		0°,J,T,UK,Pa,SR @ 83.7'	
														85		496		84.4 SHALE; black; micritic; moderately strong; moderately hard; (Bass Islands Group). 84.8 DOLOMITE; dark grayish brown; micritic; fresh; strong; hard; w/shale partings; (Bass Islands Group). 0°,J,VN,UK,Pa,WA,R @ 85.6,' 85.8'	
										85.5				86		495		90°,J,T,No,No,WA,R @ 86.1-86.5'	Core box #5 starts @ 86.1'.
														87		494		0°,J,VN,UK,Pa,WA,R @ 86.1', 86.5'	
														88		493		anhydrite filled vug @ 87.2'	
							HQ	12	5.0	5.0	4.1	100	82	89		492		0°,J,VN,UK,Pa,WA,R @ 88.9', 89.5'	
														90		491			

BLACK & VEATCH

BORING LOG

BORING NO. RB-C5

CLIENT	PROJECT	PROJECT NO.
Detroit Edison	Fermi 3 COL Application	147483

PROJECT LOCATION	COORDINATES		GROUND ELEVATION (DATUM)	TOTAL DEPTH
Monroe, MI	N 6192.8'	E 4525.7'	580.6 ft (NAVD 88)	270.5 (feet)

SURFACE CONDITIONS	COORDINATE SYSTEM	DATE START	DATE FINISHED
Level, gravel parking area	Plant	06/14/07	06/28/07

LOGGED BY	CHECKED BY	APPROVED BY
Grainger/Bonnie TB	Dogbey/Bonnie TB	Meyer EM

SAMPLING							CORING									
SAMPLE TYPE	SAMPLE NUMBER	SET 6 INCHES	2ND 6 INCHES	3RD 6 INCHES	N VALUE	SAMPLE RECOVERY	CORE SIZE	RUN NUMBER	RUN LENGTH	RUN RECOVERY	RQD RECOVERY	PERCENT RECOVERY	RQD	DEPTH (FEET)	SAMPLE TYPE	ELEVATION (FEET)	GRAPHIC LOG	CLASSIFICATION OF MATERIALS	REMARKS
														90		490			
										90.5				91		489		10°,J,VN,UK,Pa,Pl,R @ 90.9'	
																		20°,J,N,Cl,Pa,Pl,R @ 91.5'	
														92		488			
							HQ	13	5.0	4.5	4.0	90	80	93		487			
														94		486		0°,J,T,No,No,Pl,SR @ 94.2'	
																		60°,J,VN,UK,Pa,WA,R @ 94.6-95.0'	
										95.5				95		485			
														96		484			
														97		483		10°,J,T,No,No,Pl,SR @ 97.3', 97.5'	
																		0°,J,T,No,No,Pl,SR @ 97.6', 97.7', 97.8', 97.9', 98.0'	
							HQ	14	5.0	4.8	2.3	96	46	98		482			
														99		481		0°,J,T,No,No,Pl,SR @ 99.3'	
																		99.4	
														100				DOLOMITE; grayish brown; micritic; fresh; strong; hard; massive; (Bass Islands Group).	
																		0°,J,T,No,No,Pl,SR @ 99.9', 100.0', 100.2'	
										100.5						480		50°,J,T,No,No,Pl,SR @ 99.9-100.0'	Core box #6 starts @ 100.5'.
														101		479		90°,J,T,No,No,Pl,SR @ 100.4-100.5'	
																		0°,J,T,No,No,Pl,SR @ 101.5'	
														102		478		30°,J,T,No,No,WA,SR @ 101.6-101.9'	
							HQ	15	5.0	5.0	3.5	100	70	103		477		0°,J,T,No,No,Pl,SR @ 102.7', 102.9', 103.1'	
																		90°,J,T,No,No,Pl,SR @ 102.9-103.0', 104.0-104.1'	
														104		476		0°,J,T,No,No,Pl,SR @ 104.1', 104.4', 105.2'	
														105					

BLACK & VEATCH

BORING LOG

BORING NO. RB-C5

CLIENT	PROJECT	PROJECT NO.
Detroit Edison	Fermi 3 COL Application	147483

PROJECT LOCATION	COORDINATES	GROUND ELEVATION (DATUM)	TOTAL DEPTH
Monroe, MI	N 6192.8' E 4525.7'	580.6 ft (NAVD 88)	270.5 (feet)

SURFACE CONDITIONS	COORDINATE SYSTEM	DATE START	DATE FINISHED
Level, gravel parking area	Plant	06/14/07	06/28/07

LOGGED BY	CHECKED BY	APPROVED BY
Grainger/Bonnie TB	Dogbey/Bonnie TD	Meyer EM

SAMPLING							CORING									
SAMPLE TYPE	SAMPLE NUMBER	SET 6 INCHES	2ND 6 INCHES	3RD 6 INCHES	N VALUE	SAMPLE RECOVERY	CORE SIZE	RUN NUMBER	RUN LENGTH	RUN RECOVERY	RQD RECOVERY	PERCENT RECOVERY	RQD	DEPTH (FEET)	SAMPLE TYPE	ELEVATION (FEET)	GRAPHIC LOG	CLASSIFICATION OF MATERIALS	REMARKS
														105				60°,J,T,No,No,Pl,SR @ 105.3-105.5'	
										105.5						475		90°,J,T,No,No,Pl,SR @ 105.5-106.0'	
														106				60°,J,T,No,No,Pl,S @ 105.8-106.2'	
																474			
														107					
																473		40°,J,T,No,No,Pl,SR @ 107.6-107.8'	
							HQ	16	5.0	4.8	1.8	96	36	108				0°,J,N,Cl,Pa,Pl,SR @ 108.2'	
																472			
														109				0°,J,T,No,No,Pl,SR @ 109.2'	
																471		90°,J,VN,anhydrite,Pa,WA,R @ 109.5-110.5'	
														110				60°,J,T,No,No,Pl,S @ 109.6-109.8'	
										110.5						470			
														111					
																469			
														112					
																468			
							HQ	17	5.0	5.0	4.0	100	80	113					
																467			
														114					Core box #7 starts @ 114.2'.
																466		0°,J,T,No,No,WA,SR @ 114.5'	
														115				90°,J,VN,UK,Pa,WA,SR @ 114.5-115.5'	
										115.5						465			
														116				highly fractured @ 115.5-116.5'	
																464			
														117				90°,J,VN,Ca,Pa,WA,SR @ 117.1-117.6'	
																463		117.5	
							HQ	18	5.0	3.6	0.7	72	14	118				DOLOMITE; dark gray; micritic; fresh; strong; hard; banded; (Salina Group - Unit F).	
																462		0°,J,T,No,No,Pl,SR @ 118.1', 118.2'	
														119				shale band (0.05' thick) @ 118.5'	
																461		0°,J,T,No,No,Pl,SR @ 118.7', 118.9'	
														120				shale band (0.05' thick) @ 119.1'	
																		0°,J,T,No,No,Pl,SR @ 119.5', 119.7'	

BLACK & VEATCH

BORING LOG

BORING NO. RB-C5
SHEET 9 OF 19

CLIENT	PROJECT	PROJECT NO.
Detroit Edison	Fermi 3 COL Application	147483

PROJECT LOCATION	COORDINATES	GROUND ELEVATION (DATUM)	TOTAL DEPTH
Monroe, MI	N 6192.8' E 4525.7'	580.6 ft (NAVD 88)	270.5 (feet)

SURFACE CONDITIONS	COORDINATE SYSTEM	DATE START	DATE FINISHED
Level, gravel parking area	Plant	06/14/07	06/28/07

LOGGED BY	CHECKED BY	APPROVED BY
Grainger/Bonnie TD	Dogbey/Bonnie TB	Meyer EM

SAMPLING							CORING							DEPTH (FEET)	SAMPLE TYPE	ELEVATION (FEET)	GRAPHIC LOG	CLASSIFICATION OF MATERIALS	REMARKS
SAMPLE TYPE	SAMPLE NUMBER	SET 6 INCHES	2ND 6 INCHES	3RD 6 INCHES	N VALUE	SAMPLE RECOVERY	CORE SIZE	RUN NUMBER	RUN LENGTH	RUN RECOVERY	RQD RECOVERY	PERCENT RECOVERY	RQD						
														120		460		shale band (0.05' thick) @ 119.8'	
										120.5								highly fractured @ 120.5-122.5'	
														121		459			
														122		458		122.0 DOLOMITE; argillaceous; very dark brown; very fine grained; strong; hard; w/some anhydrite bedding & shale partings; (Salina Group - Unit F).	
							HQ	19	5.0	2.5	0.5	50	10	123		457			
														124		456		0°,J,T,No,No,Pl,SR @ 124.2', 124.7', 125.2'	
														125		455			
										125.5				126		454		0°,J,VN,No,No,Pl,SR @ 126.7', 126.8'	
														127		453		0°,J,VN,No,No,Pl,SR @ 127.4'	
							HQ	20	5.0	2.8	0.6	56	12	128		452		0°,J,VN,No,No,Pl,SR @ 128.2', 128.4'	
																		128.7 DOLOMITE; argillaceous; light brownish gray; fresh; strong; hard; (Salina Group - Unit F). 0°,J,VN,No,No,Pl,SR @ 128.7', 128.9', 129.2', 129.5' 90°,J,VN,No,No,Pl,SR @ 129.2-129.5'	
														129		451			
														130		450		130.0 LIMESTONE; very dark gray; micritic; fresh; strong; hard; (Salina Group - Unit F). 90°,J,T,No,No,Pl,SR @ 130.0-130.2'	Water level @ 20.5' prior to drilling on 06/26/07.
										130.5				131		449			
														132		448		131.8 CLAYSTONE; bluish gray; weak; low hardness; w/interbedded dolomite; (Salina Group - Unit F).	
							HQ	21	5.0	2.2	0.0	44	0	133		447			
														134		446		134.0 DOLOMITE; bluish gray; micritic; moderately strong; hard; (Salina Group - Unit F). highly fractured @ 134.5-135.5'	
														135					

BLACK & VEATCH

BORING LOG

BORING NO. RB-C5
SHEET 10 OF 19

CLIENT	PROJECT	PROJECT NO.
Detroit Edison	Fermi 3 COL Application	147483

PROJECT LOCATION	COORDINATES	GROUND ELEVATION (DATUM)	TOTAL DEPTH
Monroe, MI	N 6192.8' E 4525.7'	580.6 ft (NAVD 88)	270.5 (feet)

SURFACE CONDITIONS	COORDINATE SYSTEM	DATE START	DATE FINISHED
Level, gravel parking area	Plant	06/14/07	06/28/07

LOGGED BY	CHECKED BY	APPROVED BY
Grainger/Bonnie TB	Dogbey/Bonnie TB	Meyer EM

SAMPLING							CORING									
SAMPLE TYPE	SAMPLE NUMBER	SET 6 INCHES	2ND 6 INCHES	3RD 6 INCHES	N VALUE	SAMPLE RECOVERY	CORE SIZE	RUN NUMBER	RUN LENGTH	RUN RECOVERY	RQD RECOVERY	PERCENT RECOVERY	RQD	DEPTH (FEET)	SAMPLE TYPE	ELEVATION (FEET)	GRAPHIC LOG	CLASSIFICATION OF MATERIALS	REMARKS
														135					
										135.5				136		445			Core box #8 starts @ 135.5'.
														137		444			
							HQ	22	5.0	1.7	0.5	34	10	138		443		CLAYSTONE; bluish gray; weak; low hardness; (Salina Group - Unit F).	
														139		442			
														140		441		137.0	
										140.5				141		440		LIMESTONE; dark greenish gray; micritic; strong; hard; (Salina Group - Unit F).	
							HQ	23	2.5	1.5	0.0	60	0	142		439		139.8	
														143		438		DOLOMITE; bluish gray; micritic; strong hard; (Salina Group - Unit F).	
										143.0				144		437		140.8	
							HQ	24	2.5	1.0	0.0	40	0	145		436		CLAYSTONE; bluish gray; weak; low hardness; w/dolomite layers; (Salina Group - Unit F).	
														146		435			
										145.5				147		434			
							HQ	25	2.5	2.0	0.0	80	0	148		433		grades greenish gray @ 147.5'	
														149		432			
										148.0				150		431			
							HQ	26	2.5	2.5	0.0	100	0					142.8 dark gray @ 149.0-149.2'	

BLACK & VEATCH

BORING LOG

BORING NO. RB-C5

CLIENT	PROJECT	PROJECT NO.
Detroit Edison	Fermi 3 COL Application	147483

PROJECT LOCATION	COORDINATES	GROUND ELEVATION (DATUM)	TOTAL DEPTH
Monroe, MI	N 6192.8' E 4525.7'	580.6 ft (NAVD 88)	270.5 (feet)

SURFACE CONDITIONS	COORDINATE SYSTEM	DATE START	DATE FINISHED
Level, gravel parking area	Plant	06/14/07	06/28/07

LOGGED BY	CHECKED BY	APPROVED BY
Grainger/Bonnie TB	Dogbey/Bonnie TB	Meyer

SAMPLE TYPE	SAMPLE NUMBER	SET 6 INCHES	2ND 6 INCHES	3RD 6 INCHES	N VALUE	SAMPLE RECOVERY	DEPTH (FEET)	ELEVATION (FEET)	CLASSIFICATION OF MATERIALS	REMARKS
							150		dark gray @ 150.2-150.4'	
			150.5					430		
							151			
								429		
							152			
								428		
HQ	27	5.0	3.0	0.0	60	0	153			
								427		
							154		dolomite; gray @ 154.0-154.3'	
								426		
							155		dolomite band; gray @ 154.9-155.1'	
			155.5					425		Core box #9 starts @ 155.5'.
							156			
								424		
							157			
								423		
HQ	28	5.0	3.5	0.0	70	0	158			
								422	dolomite band; dark bluish gray @ 158.5-158.7'	
							159			
								421		
							160			
			160.5					420		
							161			
								419		
							162			
								418		
HQ	29	5.0	3.0	0.0	60	0	163			
								417	dolomite band; dark bluish gray @ 163.4-163.6'	
							164			
								416		
							165			

4/29/2008 4:40 PM DTE - Fermi 3 Geotech

BLACK & VEATCH

BORING LOG

BORING NO. RB-C5
SHEET 12 OF 19

CLIENT	PROJECT	PROJECT NO.
Detroit Edison	Fermi 3 COL Application	147483

PROJECT LOCATION	COORDINATES	GROUND ELEVATION (DATUM)	TOTAL DEPTH
Monroe, MI	N 6192.8' E 4525.7'	580.6 ft (NAVD 88)	270.5 (feet)

SURFACE CONDITIONS	COORDINATE SYSTEM	DATE START	DATE FINISHED
Level, gravel parking area	Plant	06/14/07	06/28/07

LOGGED BY	CHECKED BY	APPROVED BY
Grainger/Bonnie TB	Dogbey/Bonnie TB	Meyer EM

SAMPLING							CORING									
SAMPLE TYPE	SAMPLE NUMBER	SET 6 INCHES	2ND 6 INCHES	3RD 6 INCHES	N VALUE	SAMPLE RECOVERY	CORE SIZE	RUN NUMBER	RUN LENGTH	RUN RECOVERY	RQD RECOVERY	PERCENT RECOVERY	RQD	DEPTH (FEET)	SAMPLE TYPE	ELEVATION (FEET)	GRAPHIC LOG	CLASSIFICATION OF MATERIALS	REMARKS
														165		415		dolomite; dark bluish gray @ 165.1-165.5'	
										165.5								165.5	
														166		414		BRECCIA; poorly indurated claystone matrix; gray; fresh; weak; low hardness; w/fragments of angular, dark bluish gray, strong, hard claystone; (Salina Group - Unit F).	
														167		413		dolomite @ 167.3-167.6'	
							HQ	30	5.0	1.5	0.0	30	0	168		412			
														169		411			
														170		410			
										170.5									
							HQ	31	2.5	1.0	0.0	40	0	171		409			
														172		408		0°,J,T,No,No,PI,SR @ 172.3'	
																		172.5	
														173		407		DOLOMITE; (Bass Islands Group). 0°,J,VN,UK,Pa,PI,SR @ 172.8'	
										173.0								173.0	
							HQ	32	2.5	1.3	0.0	52	0	174		406		BRECCIA; poorly indurated claystone matrix; gray; fresh; weak; low hardness; w/fragments of angular, dark bluish gray, strong, hard claystone; (Salina Group - Unit F). dolomite band @ 174.3-174.5'	
														175		405		174.5	
										175.5								CLAYSTONE; dark bluish gray; weathered; weak; low hardness; (Salina Group - Unit F).	
							HQ	33	2.5	0.9	0.0	36	0	176		404			
														177		403			
										178.0				178		402			
							HQ	34	2.5	1.6	0.55	64	22	179		401		179.3	Core box #10 starts @ 179.0'.
														180				LIMESTONE; crystalline; gray; micritic; fresh; strong; hard; 10% vuggy; (Salina Group - Unit F).	

BLACK & VEATCH

BORING LOG

BORING NO. RB-C5

CLIENT	PROJECT	PROJECT NO.
Detroit Edison	Fermi 3 COL Application	147483

PROJECT LOCATION	COORDINATES	GROUND ELEVATION (DATUM)	TOTAL DEPTH
Monroe, MI	N 6192.8' E 4525.7'	580.6 ft (NAVD 88)	270.5 (feet)

SURFACE CONDITIONS	COORDINATE SYSTEM	DATE START	DATE FINISHED
Level, gravel parking area	Plant	06/14/07	06/28/07

LOGGED BY	CHECKED BY	APPROVED BY
Grainger/Bonnie TB	Dogbey/Bonnie TB	Meyer EM

SAMPLING: SAMPLE TYPE	SAMPLE NUMBER	SET 6 INCHES	2ND 6 INCHES	3RD 6 INCHES	N VALUE	SAMPLE RECOVERY	CORING: CORE SIZE	RUN NUMBER	RUN LENGTH	RUN RECOVERY	RQD RECOVERY	PERCENT RECOVERY	RQD	DEPTH (FEET)	ELEVATION (FEET)	CLASSIFICATION OF MATERIALS	REMARKS
														180			
			180.5												400		
														181			
															399	90°,J,VN,No,No,WA,R @ 181.7-182.0'	
														182		0°,J,VN,No,No,Pl,SR @ 182.2', 182.4'	
															398		
HQ	35	5.0	3.0	1.3	60	26								183			
															397	grades light brownish gray @ 183.5'	
														184			
															396	184.7	
														185		SHALE; fissile; gray; weathered; very weak; low hardness; w/beds of very pale brown, micritic, low hardness, argillaceous dolomite & greenish, micritic; limestone; (Salina Group - Unit F)	
			185.5												395		
														186			
															394		
														187			
															393		
HQ	36	5.0	1.8	0.0	36	0								188			
															392		
														189			
															391		
														190			
			190.5												390		Water level @ 23.9' prior to drilling on 06/27/07.
														191		limestone band; greenish gray @ 191.2-191.4'	
HQ	37	2.5	0.7	0.0	28	0									389		
														192			
															388	dolomite; bluish gray @ 192.8-193.1'	
			193.0											193			
															387		
														194			
HQ	38	2.5	1.0	0.0	40	0									386	dolomite; bluish gray @ 194.3-194.6'	
														195			

BLACK & VEATCH

BORING LOG

BORING NO. RB-C5

CLIENT	PROJECT	PROJECT NO.
Detroit Edison	Fermi 3 COL Application	147483

PROJECT LOCATION	COORDINATES	GROUND ELEVATION (DATUM)	TOTAL DEPTH
Monroe, MI	N 6192.8' E 4525.7'	580.6 ft (NAVD 88)	270.5 (feet)

SURFACE CONDITIONS	COORDINATE SYSTEM	DATE START	DATE FINISHED
Level, gravel parking area	Plant	06/14/07	06/28/07

LOGGED BY	CHECKED BY	APPROVED BY
Grainger/Bonnie	Dogbey/Bonnie	Meyer

SAMPLING							CORING									
SAMPLE TYPE	SAMPLE NUMBER	SET 6 INCHES	2ND 6 INCHES	3RD 6 INCHES	N VALUE	SAMPLE RECOVERY	CORE SIZE	RUN NUMBER	RUN LENGTH	RUN RECOVERY	RQD RECOVERY	PERCENT RECOVERY	RQD	DEPTH (FEET)	SAMPLE TYPE	ELEVATION (FEET)	GRAPHIC LOG	CLASSIFICATION OF MATERIALS	REMARKS
														195					
										195.5						385			
							HQ	39	2.5	1.3	0.0	52	0	196		384			
														197		383			
										198.0				198		382			
							HQ	40	2.5	1.0	0.0	40	0	199		381			
														200		380			
										200.5									
							HQ	41	2.5	1.7	0.8	68	32	201		379			
														202		378			
										203.0				203		377			
							HQ	42	2.5	2.0	0.0	80	0	204		376			
														205		375			
										205.5				206		374			
							HQ	43	5.0	3.0	0.45	60	9	207		373			
														208		372			
														209		371			
														210					

196.5

LIMESTONE; greenish gray; micritic; fresh; strong; hard; 5% vuggy; (Salina Group - Unit F).
90°,J,VN,No,No,WA,R @ 197.0-197.3'
30°,J,VN,No,No,WA,R @ 197.5'

199.2

DOLOMITE; shaley; light brownish gray; micritic; fresh; strong; hard; w/interbedded limestone; (Salina Group - Unit F).
10°,J,VN,No,No,PI,SR @ 199.15'

200.1

LIMESTONE; greenish gray; micritic; fresh; strong; hard; 5% vuggy; (Salina Group - Unit F).
90°,J,VN,UK,Pa,R @ 200.2-200.4'

202.0

DOLOMITE; shaley; light brownish gray; micritic; fresh; strong; hard; (Salina Group - Unit F).
10°,J,T,No,No,PI,SR @ 202.0'
40°,J,T,No,No,PI,SR @ 202.8'
limestone band; greenish gray @ 202.8-203.0'

203.0

CLAYSTONE; gray; fresh; weak; low hardness; w/ limestone beds; (Salina Group - Unit F).

Core box #11 starts @ 203.0'.

205.8

LIMESTONE; dark greenish gray; micritic; fresh; strong; moderately hard; 20% pitted; 5% vuggy; (Salina Group - Unit F).

60°,J,VN,No,No,PI,R @ 207.3-207.5', 208.5-208.7'

grades greenish gray @ 208.0'
40°,J,VN,No,No,PI,R @ 208.1-208.3'

BLACK & VEATCH

BORING LOG

BORING NO. RB-C5

CLIENT	PROJECT	PROJECT NO.
Detroit Edison	Fermi 3 COL Application	147483

PROJECT LOCATION	COORDINATES	GROUND ELEVATION (DATUM)	TOTAL DEPTH
Monroe, MI	N 6192.8' E 4525.7'	580.6 ft (NAVD 88)	270.5 (feet)

SURFACE CONDITIONS	COORDINATE SYSTEM	DATE START	DATE FINISHED
Level, gravel parking area	Plant	06/14/07	06/28/07

LOGGED BY	CHECKED BY	APPROVED BY
Grainger/Bonnie TB	Dogbey/Bonnie TD	Meyer EM

SAMPLING							CORING									
SAMPLE TYPE	SAMPLE NUMBER	SET 6 INCHES	2ND 6 INCHES	3RD 6 INCHES	N VALUE	SAMPLE RECOVERY	CORE SIZE	RUN NUMBER	RUN LENGTH	RUN RECOVERY	RQD RECOVERY	PERCENT RECOVERY	RQD	DEPTH (FEET)	SAMPLE TYPE	ELEVATION (FEET)
														210		
										210.5				211		370
														212		369
							HQ	44	5.0	4.0	2.0	80	40	213		368
														214		367
														215		366
										215.5				216		365
							HQ	45	5.0	4.8	2.8	96	56	217		364
														218		363
														219		362
										220.5				220		361
							HQ	46	5.0	4.5	1.1	90	22	221		360
														222		359
														223		358
														224		357
														225		356

GRAPHIC LOG	CLASSIFICATION OF MATERIALS	REMARKS
	0°,J,VN,No,No,WA,R @ 212.1', 212.2'	
	212.3	
	DOLOMITE; argillaceous; light brownish gray; micritic; fresh; strong; hard; (Salina Group - Unit F).	
	10°,J,VN,UK,Pa,R @ 212.6'	
	0°,J,VN,No,No,WA,R @ 212.8', 213.0', 213.9'	
	60°,J,T,No,No,Pl,SR @ 214.6'	
	60°,J,VN,Ca,Pa,Pl,SR @ 215.0-215.5'	
	215.6	
	LIMESTONE; greenish gray; micritic; fresh; strong; hard; (Salina Group - Unit F).	
	217.7	
	DOLOMITE; argillaceous; light brownish gray; micritic; fresh; strong; hard; (Salina Group - Unit F).	
	218.9	
	LIMESTONE; greenish gray; micritic; fresh; strong; hard; 5% vuggy; (Salina Group - Unit F).	
	60°,J,VN,No,No,Pl,R @ 219.9'	Core box #12 starts @ 219.7'.
	220.5	
	BRECCIA; healed; grayish brown; fine to coarse grained; (Salina Group - Unit F).	
	221.0	
	DOLOMITE; light gray; micritic; fresh; strong; hard; (Salina Group - Unit F).	
	221.5	
	CLAYSTONE; dark bluish gray; weathered; weak; low hardness; (Salina Group - Unit F).	
	221.9	
	DOLOMITE; light gray; micritic; fresh; strong; hard; (Salina Group - Unit F).	
	222.5	
	LIMESTONE; greenish gray; micritic; fresh; strong; hard; 5% vuggy; (Salina Group - Unit F).	
	224.9	

BLACK & VEATCH

BORING LOG

BORING NO. RB-C5
SHEET 16 OF 19

CLIENT	PROJECT	PROJECT NO.
Detroit Edison	Fermi 3 COL Application	147483

PROJECT LOCATION	COORDINATES	GROUND ELEVATION (DATUM)	TOTAL DEPTH
Monroe, MI	N 6192.8' E 4525.7'	580.6 ft (NAVD 88)	270.5 (feet)

SURFACE CONDITIONS	COORDINATE SYSTEM	DATE START	DATE FINISHED
Level, gravel parking area	Plant	06/14/07	06/28/07

LOGGED BY	CHECKED BY	APPROVED BY
Grainger/Bonnie TB	Dogbey/Bonnie TB	Meyer EM

SAMPLING							CORING									
SAMPLE TYPE	SAMPLE NUMBER	SET 6 INCHES	2ND 6 INCHES	3RD 6 INCHES	N VALUE	SAMPLE RECOVERY	CORE SIZE	RUN NUMBER	RUN LENGTH	RUN RECOVERY	RQD RECOVERY	PERCENT RECOVERY	RQD	DEPTH (FEET)	SAMPLE TYPE	ELEVATION (FEET)	GRAPHIC LOG	CLASSIFICATION OF MATERIALS	REMARKS
														225				DOLOMITE; argillaceous; light brownish gray; micritic; fresh; strong; hard; (Salina Group - Unit F).	
										225.5						355			
														226					
																354			
														227					
																353		breccia band; grayish brown @ 227.3-227.5'	
							HQ	47	5.0	4.2	1.7	84	34	228				20°,J,T,VN,UK,R @ 227.7-227.9'	
																352		30°,J,VN,UK,Pa,Pl,SR @ 228.4'	
																		60°,J @ 228.6-228.8'	
														229				229.0	
																351		BRECCIA; healed; grayish brown; fine to coarse grained; fresh; moderately strong; hard; (Salina Group - Unit F).	
														230				230.0	
										230.5						350		DOLOMITE; argillaceous; light brownish gray; micritic; fresh; strong; hard; (Salina Group - Unit F).	
														231					
																349		231.7	
														232				BRECCIA; healed; grayish brown; fine to coarse grained; fresh; (Salina Group - Unit F).	
																348			
							HQ	48	5.0	1.0	0.0	20	0	233				233.3	
																347		DOLOMITE; gray; micritic; fresh; strong; hard; (Salina Group - Unit F).	
														234					
																346			
														235				235.0	
																345		LIMESTONE; gray; micritic; fresh; strong; hard; (Salina Group - Unit F).	
										235.5								235.7	
														236				CLAYSTONE; dark bluish gray; fresh; weak; low hardness; (Salina Group - Unit F).	
																344		236.4	
							HQ	49	2.5	1.0	0.0	40	0	237				DOLOMITE; gray; micritic; strong; hard; (Salina Group - Unit F).	
																343		90°,J,T,No,No,Pl,SR @ 236.6-237.2'	
																		237.3	
														238				CLAYSTONE; dark bluish gray; fresh; weak; low hardness; (Salina Group - Unit F).	
										238.0						342		238.1	
																		LIMESTONE; gray; fresh; strong; hard; 5% vuggy; (Salina Group - Unit F).	
														239				239.3	
							HQ	50	2.5	2.3	0.0	92	0			341		DOLOMITE; shaley; light gray; micritic; fresh; strong; hard; w/ostracodes; (Salina Group - Unit E).	
														240					

BLACK & VEATCH

BORING LOG

BORING NO. RB-C5
SHEET 17 OF 19

CLIENT	PROJECT	PROJECT NO.
Detroit Edison	Fermi 3 COL Application	147483

PROJECT LOCATION	COORDINATES	GROUND ELEVATION (DATUM)	TOTAL DEPTH
Monroe, MI	N 6192.8' E 4525.7'	580.6 ft (NAVD 88)	270.5 (feet)

SURFACE CONDITIONS	COORDINATE SYSTEM	DATE START	DATE FINISHED
Level, gravel parking area	Plant	06/14/07	06/28/07

LOGGED BY	CHECKED BY	APPROVED BY
Grainger/Bonnie TB	Dogbey/Bonnie TB	Meyer EM

SAMPLING							CORING										
SAMPLE TYPE	SAMPLE NUMBER	SET 6 INCHES	2ND 6 INCHES	3RD 6 INCHES	N VALUE	SAMPLE RECOVERY	CORE SIZE	RUN NUMBER	RUN LENGTH	RUN RECOVERY	RQD RECOVERY	PERCENT RECOVERY	RQD	DEPTH (FEET)	SAMPLE TYPE	ELEVATION (FEET)	GRAPHIC LOG	CLASSIFICATION OF MATERIALS	REMARKS
														240				90°,J,T,No,No,Pl,SR @ 240.0-240.2'	
										240.5				241		340		90°,J,T,No,No,Pl,SR @ 240.8-241.0' 0°,J,VN,No,No,WA,SR @ 240.8', 240.9', 241.0'	Core box #13 starts @ 240.5'.
														242		339		0°,J,VN,UK,Pa,SR @ 242.0'	
							HQ	51	5.0	4.8	3.4	96	68	243		338			
														244		337		60°,J,T,No,No,Pl,SR @ 243.7-244.3' 0°,J,VN,No,No,WA,SR @ 244.1', 244.3'	
														245		336		50°,J,T,UK,Pa,Pl,R @ 244.4-244.7'	
										245.5				246		335		clay band; white @ 245.6-245.7'	
														247		334		10°,J,VN,No,No,Pl,SR @ 246.4', 246.5'	
							HQ	52	5.0	4.8	2.8	96	56	248		333		0°,J,VN,No,No,Pl,SR @ 247.5', 248.0' 10°,J,VN,No,No,Pl,SR @ 247.6'	
														249		332		45°,J,T,No,No,Pl,R @ 249.0-249.1'	
														250		331		10°,J,VN,No,No,Pl,SR @ 250.0', 250.1'	
										250.5				251		330			
														252		329			
							HQ	53	5.0	4.0	3.0	80	60	253		328		10°,J,VN,UK,Pa,R @ 253.5' 10°,J,VN,No,No,Pl,SR @ 253.7'	~ 1.0' core loss @ 253.7-258.7'.
														254		327			
														255		326			

BLACK & VEATCH

BORING LOG

BORING NO. RB-C5

CLIENT	PROJECT	PROJECT NO.
Detroit Edison	Fermi 3 COL Application	147483

PROJECT LOCATION	COORDINATES	GROUND ELEVATION (DATUM)	TOTAL DEPTH
Monroe, MI	N 6192.8' E 4525.7'	580.6 ft (NAVD 88)	270.5 (feet)

SURFACE CONDITIONS	COORDINATE SYSTEM	DATE START	DATE FINISHED
Level, gravel parking area	Plant	06/14/07	06/28/07

LOGGED BY	CHECKED BY	APPROVED BY
Grainger/Bonnie TB	Dogbey/Bonnie TB	Meyer EM

SAMPLING							CORING									
SAMPLE TYPE	SAMPLE NUMBER	SET 6 INCHES	2ND 6 INCHES	3RD 6 INCHES	N VALUE	SAMPLE RECOVERY	CORE SIZE	RUN NUMBER	RUN LENGTH	RUN RECOVERY	RQD RECOVERY	PERCENT RECOVERY	RQD	DEPTH (FEET)	SAMPLE TYPE	ELEVATION (FEET)	GRAPHIC LOG	CLASSIFICATION OF MATERIALS	REMARKS
														255					
										255.5				256		325		256.0 — DOLOMITE; argillaceous; light brownish gray; micritic; fresh; strong; hard; banded; (Salina Group - Unit E). 0°,J,VN,Cl,Pa,Pl,SR @ 256.2' 90°,J,VN,anhydrite,Fi,Pl,SR @ 256.3-257.1' 10°,J,T,Cl,Pa,Pl,SR @ 257.2'	Core box #14 starts @ 255.5'.
														257		324			
HQ	54	5.0	4.7	4.0	94	80								258		323		anhydrite @ 257.9-258.0'	
														259		322		0°,J,VN,Cl,Pa,Pl,SR @ 258.5', 259.0'	
														260		321		259.1 — DOLOMITE; w/interbedded anhydrite; (Salina Group - Unit E). 259.7 — 10°,J,T,Cl,Pa,Pl,SR @ 259.7' DOLOMITE; argillaceous; light brownish gray; micritic; fresh; strong; hard; banded; (Salina Group - Unit E).	
										260.5				261		320		260.1 — ANHYDRITE; light gray; micritic; fresh; weak; low hardness; w/interbedded black shale partings; (Salina Group - Unit E). 0°,J,VN,Cl,Pa,Pl,SR @ 260.2'	
														262		319		260.7 — ANHYDRITE; light gray; micritic; fresh; weak; low hardness; w/intermingled dolomite; light brownish gray; micritic; fresh; strong; hard; (Salina Group - Unit E).	
HQ	55	5.0	5.0	NR	100	NR								263		318		261.3 — DOLOMITE; crystalline; light brownish gray; micritic; fresh; strong; hard; w/shale partings; (Salina Group - Unit E).	
														264		317		262.3 — DOLOMITE; light gray; micritic; fresh; strong; hard; w/ shale partings; (Salina Group - Unit E).	
														265		316		265.1 — ANHYDRITE; light gray; micritic; fresh; strong; moderately hard; (Salina Group - Unit E).	
										265.5				266		315		265.3 — DOLOMITE; light brownish gray; micritic; fresh; strong; hard; w/shale partings; (Salina Group - Unit E).	
														267		314		266.1 — ANHYDRITE; light gray; micritic; fresh; strong; moderately hard; banded; (Salina Group - Unit E).	
HQ	56	5.0	5.0	4.7	100	94								268		313		266.5 — DOLOMITE; light brownish gray; micritic; fresh; strong; hard; w/shale & anhydrite partings; (Salina Group - Unit E). grades banded w/anhydrite @ 267.1'	
														269		312		268.5 — ANHYDRITE; light gray; micritic; fresh; strong; (Salina Group - Unit E). intermingled w/dolomite; light brownish gray @ 268.5-268.7'	Core box #15 starts @ 269.1'.
														270		311			

BLACK & VEATCH

BORING LOG

BORING NO. RB-C5
SHEET 19 OF 19

CLIENT	PROJECT	PROJECT NO.
Detroit Edison	Fermi 3 COL Application	147483

PROJECT LOCATION	COORDINATES	GROUND ELEVATION (DATUM)	TOTAL DEPTH
Monroe, MI	N 6192.8' E 4525.7'	580.6 ft (NAVD 88)	270.5 (feet)

SURFACE CONDITIONS	COORDINATE SYSTEM	DATE START	DATE FINISHED
Level, gravel parking area	Plant	06/14/07	06/28/07

LOGGED BY	CHECKED BY	APPROVED BY
Grainger/Bonnie TB	Dogbey/Bonnie TB	Meyer

SAMPLING: SAMPLE TYPE | SAMPLE NUMBER | SET 6 INCHES | 2ND 6 INCHES | 3RD 6 INCHES | N VALUE | SAMPLE RECOVERY

CORING: CORE SIZE | RUN NUMBER | RUN LENGTH | RUN RECOVERY | RQD RECOVERY | PERCENT RECOVERY | RQD

DEPTH (FEET)	SAMPLE TYPE	ELEVATION (FEET)	GRAPHIC LOG	CLASSIFICATION OF MATERIALS	REMARKS
270		310		269.0 DOLOMITE; light brownish gray; micritic; fresh; strong; hard; w/anhydrite banding; (Salina Group - Unit E).	
271		309		269.7 DOLOMITE; light brownish gray; micritic; fresh; strong; hard; (Salina Group - Unit E).	Bottom of boring @ 270.5'. Water level @ 23.5' @ completion of drilling. Boring caved @ 158.4'. Cleared caving. Backfilled w/ bentonite chips to 37.5' below ground surface on 09/08/07. Continued w/ bentonite chips to 6' below ground surface, then gravel to surface.
272		308			
273		307			
274		306			
275		305			
276		304			
277		303			
278		302			
279		301			
280		300			
281		299			
282		298			
283		297			
284		296			
285					

BLACK & VEATCH

BORING LOG

BORING NO. RB-C6

CLIENT	PROJECT	PROJECT NO.
Detroit Edison	Fermi 3 COL Application	147483

PROJECT LOCATION	COORDINATES	GROUND ELEVATION (DATUM)	TOTAL DEPTH
Monroe, MI	N 6192.8' E 4606.0'	580.8 ft (NAVD 88)	240.0 (feet)

SURFACE CONDITIONS	COORDINATE SYSTEM	DATE START	DATE FINISHED
Gravel parking lot	Plant	06/14/07	09/19/07

LOGGED BY	CHECKED BY	APPROVED BY
Geo for TB for GCC Grainger/Mass/Ohlmacher	Geo for GCC Dogbey/Ohlmacher	Meyer EM

SAMPLING							CORING									
SAMPLE TYPE	SAMPLE NUMBER	SET 6 INCHES	2ND 6 INCHES	3RD 6 INCHES	N VALUE	SAMPLE RECOVERY	CORE SIZE	RUN NUMBER	RUN LENGTH	RUN RECOVERY	RQD RECOVERY	PERCENT RECOVERY	RQD	DEPTH (FEET)	SAMPLE TYPE	ELEVATION (FEET)	GRAPHIC LOG	CLASSIFICATION OF MATERIALS	REMARKS
														0		580		Poorly graded COBBLES - About 90% subangular, hard cobbles w/max. size 12"; about 5% sand; about 5% fines; dark reddish gray; dry; weak reaction w/ HCl; homogeneous; (Fill).	Boring advanced w/vacuum excavation.
S	1					2.0				2.0			2.0	2		579			Below 2.0' continued w/4" ID sonic continuous sampler w/ nominal 6" temporary steel casing advanced w/sampler.
														3		578			
														4		577			
														5		576			
S	2					2.0				5.0			2.0	6		575			
														7		574			
														8		573			
														9		572			
														10		571			
S	3					3.7				10.0			3.7	11		570			
														12		569			
														13		568		12.4 ORGANIC Soil (OL); very dark gray; moist; organic decomposition odor 12.5 Fat CLAY (CH) - About 100% high plasticity, high toughness, no dilatancy, high dry strength fines; dark gray; firm; moist; no reaction w/HCl; homogeneous; (Lacustrine Deposit).	
														14		567			Set nominal 6" temporary steel casing to 14.8'.
										14.0				15		566			

BLACK & VEATCH

BORING LOG

BORING NO. RB-C6

CLIENT	PROJECT	PROJECT NO.
Detroit Edison	Fermi 3 COL Application	147483

PROJECT LOCATION	COORDINATES	GROUND ELEVATION (DATUM)	TOTAL DEPTH
Monroe, MI	N 6192.8' E 4606.0'	580.8 ft (NAVD 88)	240.0 (feet)

SURFACE CONDITIONS	COORDINATE SYSTEM	DATE START	DATE FINISHED
Gravel parking lot	Plant	06/14/07	09/19/07

LOGGED BY	CHECKED BY	APPROVED BY
Grainger/Mass/Ohlmacher	Dogbey/Ohlmacher	Meyer

SAMPLING							CORING										
SAMPLE TYPE	SAMPLE NUMBER	SET 6 INCHES	2ND 6 INCHES	3RD 6 INCHES	N VALUE	SAMPLE RECOVERY	CORE SIZE	RUN NUMBER	RUN LENGTH	RUN RECOVERY	RQD RECOVERY	PERCENT RECOVERY	RQD	DEPTH (FEET)	SAMPLE TYPE	ELEVATION (FEET)	GRAPHIC LOG	CLASSIFICATION OF MATERIALS	REMARKS
SPT	4	3	4	4	8	0.2								15					Below 14.0' continued w/4½" tricone bit using bentonite mud as drilling fluid. SPT performed w/D-50 automatic hammer.
														16		565			
														17		564			
														18		563		17.8	
														19		562		Lean CLAY (CL) - About 95% medium plasticity, medium toughness, slow dilatancy fines; about 5% fine sand; dark grayish brown; firm; moist; strong reaction w/HCl; (Glacial Till).	
														20		561			
TW	5					1.6								21		560			
														22		559		0.1' fine sand seam @ 22' (bottom of tube)	PP > 4.5 TSF
														23		558			
														24		557			
														25		556		24.5	
SPT	6	13	16	19	35	1.3								26		555		Sandy lean CLAY (CL) - About 65% medium plasticity, medium toughness, slow dilatancy, very high dry strength fines; about 25% fine to coarse, rounded, hard sand; about 10% fine, subangular, hard gravel w/max. size 3/4"; dark gray; hard; moist; homogeneous; (Glacial Till).	
														27		554			
														28		553			
														29		552			
			29.5											30		551		29.5 DOLOMITE; crystalline; dark gray; micritic; fresh; very	Tricone refusal @ 29.5'.

BLACK & VEATCH

BORING LOG

BORING NO. RB-C6
SHEET 3 OF 17

CLIENT	PROJECT	PROJECT NO.
Detroit Edison	Fermi 3 COL Application	147483

PROJECT LOCATION	COORDINATES	GROUND ELEVATION (DATUM)	TOTAL DEPTH
Monroe, MI	N 6192.8' E 4606.0'	580.8 ft (NAVD 88)	240.0 (feet)

SURFACE CONDITIONS	COORDINATE SYSTEM	DATE START	DATE FINISHED
Gravel parking lot	Plant	06/14/07	09/19/07

LOGGED BY	CHECKED BY	APPROVED BY
GCO for TB for GCC Grainger/Mass/Ohlmacher	GCO for EM for GCO Dogbey/Ohlmacher	Meyer EM

SAMPLING							CORING									
SAMPLE TYPE	SAMPLE NUMBER	SET 6 INCHES	2ND 6 INCHES	3RD 6 INCHES	N VALUE	SAMPLE RECOVERY	CORE SIZE	RUN NUMBER	RUN LENGTH	RUN RECOVERY	RQD RECOVERY	PERCENT RECOVERY	RQD	DEPTH (FEET)	SAMPLE TYPE	ELEVATION (FEET)	GRAPHIC LOG	CLASSIFICATION OF MATERIALS	REMARKS
S	7					4.2								30				strong; very hard; (Bass Islands Group).	Below 29.5' continued w/4" ID sonic continuous sampler w/ nominal 6" temporary steel casing advanced w/sampler. S-7 labeled S1.
														31		550			
														32		549			
														33		548			
																			Set nominal 6" temporary steel casing to 33.4'. Water level @ 20.3' prior to drilling on 08/29/07. Core box #1 starts @ 33.7'. Below 33.7' continued w/ triple tube wire line core barrel w/diamond bit using water as drilling fluid.
PQ	1	1.8	33.7 1.7	0.5	94	28								34		547		33.7 DOLOMITE; argillaceous; dark grayish brown; very fine grained; very strong; hard; w/stylolites; (Bass Islands Group). highly fractured @ 34.0-34.7' 80°,J,No,No,Pl,SR @ 34.7-35.0'	
														35		546		0°,B,UK,Fi,Pl,SR @ 35.3',36.5',36.8'	
																545		80°,J,T,Pl,SR @ 35.8-36.4'	
PQ	2	5.0	35.5 5.0	4.0	100	80								36				0°,B,No,No,Pl,SR @ 36.2'	
														37		544		36.5 DOLOMITE; olive gray; very fine grained (crystalline); fresh; very strong; hard; w/shale partings; (Bass Islands Group). 0°,B,UK,Fi,Pl,SR @ 37.0'	
														38		543		90°,J,Ca,Pa,Pl,SR @ 37.2-37.5' 85°,J,Ca,Pa,Pl,SR @ 37.6-38.3'	
														39		542		90°,J,Ca,Pa,WA,SR @ 38.7-39.3' argillaceous dolomite beds @ 38.8-39.3',40.2-40.7'	No drilling fluid return @ 39.0'.
														40		541		highly fractured @ 39.9-40.5'	
																		40.5	
														41		540		DOLOMITE; vuggy; light gray; very fine grained (crystalline); slightly weathered; very strong; hard; vugs 0.04-0.4"; some filled w/anhydrite; (Bass Islands Group).	
														42		539		0°,B,No,No,Pl,SR @ 40.7'	
																		41.7 DOLOMITE; argillaceous; mottled dark gray & very dark gray; micritic; fresh to slightly weathered; very strong; very hard; (Bass Islands Group).	
PQ	3	5.0	40.5 5.0	2.4	100	48								43		538		30°,J,No,No,WA,SR @ 41.9-42.2' 30°,J,Cl,Fi,Pl,SR @ 42.2-42.3' highly fractured @ 43.0-43.7', 44.5-44.7' 40°,J,Ca,Pa,Pl,SR @ 43.0-43.2' 90°,J,No,No,Pl,SR @ 43.5-44.3' light gray dolomite band @ 43.8-43.9' 20°,J,No,No,St,SR @ 43.9-44.0'	Core box #2 starts @ 42.8'.
														44		537			
														45		536		0°,B,No,No,Pl,SR @ 44.3,44.4'	

5/23/2008 10:46 AM DTE - Fermi 3 Geotech

BLACK & VEATCH

BORING LOG

BORING NO. RB-C6

CLIENT	PROJECT	PROJECT NO.
Detroit Edison	Fermi 3 COL Application	147483

PROJECT LOCATION	COORDINATES	GROUND ELEVATION (DATUM)	TOTAL DEPTH
Monroe, MI	N 6192.8' E 4606.0'	580.8 ft (NAVD 88)	240.0 (feet)

SURFACE CONDITIONS	COORDINATE SYSTEM	DATE START	DATE FINISHED
Gravel parking lot	Plant	06/14/07	09/19/07

LOGGED BY	CHECKED BY	APPROVED BY
GCO for TB for Grainger/Mass/Ohlmacher	GCO for Dogbey/Ohlmacher	EM Meyer

SAMPLING							CORING									
SAMPLE TYPE	SAMPLE NUMBER	SET 6 INCHES	2ND 6 INCHES	3RD 6 INCHES	N VALUE	SAMPLE RECOVERY	CORE SIZE	RUN NUMBER	RUN LENGTH	RUN RECOVERY	RQD RECOVERY	PERCENT RECOVERY	RQD	DEPTH (FEET)	SAMPLE TYPE	ELEVATION (FEET)	GRAPHIC LOG	CLASSIFICATION OF MATERIALS	REMARKS
														45				44.7 DOLOMITE; dark grayish brown; pitted; very fine grained (crystalline); fresh; strong; very hard; w/shale partings & fossils (mollusks); (Bass Islands Group).	
										45.5				46		535		0°,B,No,No,Pl,SR @ 45.2'	
																		dark gray @ 45.5-46.8'	
														47		534		shale partings - 0°,B,Pl,SR @ 46.0',46.1'	
																		80°,J,Ca,Pa,Pl,SR @ 46.1-46.5'	
																		80°,J,No,No,Pl,SR @ 46.4-46.8'	
																533		shale parting - 0°,B,WA,SR @ 46.8'	
PQ	4	5.0	5.0	4.1	100	82	PQ	4	5.0	5.0	4.1	100	82	48				w/very closely spaced stylolites @ 46.8-46.9'	
																		w/vugs, most elongated; up to a max. 1.2" diameter; some filled w/large (up to 0.4") anhydrite crystals @ 47.5-48.2'	
																532		0°,B,No,No,Pl,SR @ 47.7', 48.5', 49.8'	
														49				20°,J,Cl,Fi,Pl,SR @ 49.3-49.4'	
																531		49.8 DOLOMITE; light gray; micritic; fresh; very strong; very hard; w/zones of very closely spaced stylolites; moderately wide spaced stylolites throughout; (Bass Islands Group).	
										50.5				50					
																530			Core box @3 starts @ 51.4'.
														51					
																529			
														52				0°,B,No,No,WA,SR @ 52.3'	
																528			
PQ	5	5.0	5.0	4.9	100	98	PQ	5	5.0	5.0	4.9	100	98	53				50°,J,No,No,Pl,SR @ 53.2-53.5'	
																		53.2 DOLOMITE & DOLOMITE; argillaceous; mottled dark grayish brown & grayish brown; pitted; micritic; fresh to slightly weathered; very strong; very hard; (Bass Islands Group).	
														54		527		90°,J,T,Pl @ 54.4-55.0', 54.4-54.9'	
																		0°,B,UK,Fi,Pl,SR @ 54.5'	
														55		526		55.0 DOLOMITE; argillaceous; gray & dark gray; micritic; fresh; very strong; very hard; banded; (Bass Islands Group).	Drill chatter @ 55.0-55.5'.
										55.5								90°,J,No,No,Pl,SR @ 55.2-55.7'	
														56		525		55.6 DOLOMITE & SHALE dolomitic; mottled greenish gray & black; micritic; fresh; very strong; hard; intermingled w/silt; about 100% low plasticity, low toughness, slow dilatancy fines; gray; soft; moist; no hydrocarbon odor; strong reaction w/HCl; homogeneous; (Bass Islands Group).	
																		90°,J,T,Pl,SR @ 55.8-57.8'	
														57		524		55.9 DOLOMITE; oolitic; light brownish gray; medium to coarse grained; fresh; strong; hard; oolites 0.02-0.04" diameter; (Bass Islands Group).	
																		0°,J,No,No,Pl,SR @ 56.5', 57.2', 59.6'	
														58		523		70°,J,T,Pl,SR @ 57.0-57.6'	
PQ	6	5.0	5.0	4.4	100	88	PQ	6	5.0	5.0	4.4	100	88						
														59		522			
														60		521			

BLACK & VEATCH

BORING LOG

BORING NO. RB-C6

CLIENT	PROJECT	PROJECT NO.
Detroit Edison	Fermi 3 COL Application	147483

PROJECT LOCATION	COORDINATES	GROUND ELEVATION (DATUM)	TOTAL DEPTH
Monroe, MI	N 6192.8' E 4606.0'	580.8 ft (NAVD 88)	240.0 (feet)

SURFACE CONDITIONS	COORDINATE SYSTEM	DATE START	DATE FINISHED
Gravel parking lot	Plant	06/14/07	09/19/07

LOGGED BY	CHECKED BY	APPROVED BY
Geo for TB for GEO Grainger/Mass/Ohlmacher	Em for GEO Dogbey/Ohlmacher	Em Meyer

SAMPLING: SAMPLE TYPE, SAMPLE NUMBER, SET 6 INCHES, 2ND 6 INCHES, 3RD 6 INCHES, N VALUE, SAMPLE RECOVERY

CORING: CORE SIZE, RUN NUMBER, RUN LENGTH, RUN RECOVERY, RQD RECOVERY, PERCENT RECOVERY, RQD

SAMPLE TYPE	SAMPLE NUMBER	SET 6 INCHES	2ND 6 INCHES	3RD 6 INCHES	N VALUE	SAMPLE RECOVERY	DEPTH (FEET)	ELEVATION (FEET)	CLASSIFICATION OF MATERIALS	REMARKS
							60		80°,J,No,No,Pl,SR @ 60.2-60.4' thin dolomite bed; argillaceous; gray; very fine grained (crystalline); fresh; very strong; hard; banded @ 60.2-60.5' shale band; very dark gray; micritic; highly weathered; weak; low hardness @ 60.5-60.7' clay band; about 100% high plasticity, low toughness, no dilatancy fines; gray; soft; moist; slight hydrocarbon odor; strong reaction w/HCl; homogeneous @ 60.7-60.8'	Core box #4 starts @ 59.9'.
PQ	7	5.0	60.5 5.0	2.4	100	48	61 62 63 64 65	520 519 518 517 516	60.8 DOLOMITE; light gray; micritic; fresh; very strong; hard; banded; w/closely spaced shale partings; black; fresh; very strong; very hard; (Bass Islands Group). shale partings - 0°,B,Pl,SR @ 60.9',61.4',61.9',62.3', 62.4',62.9' 80°,J,No,No,Pl,SR @ 61.4-62.7' brecciated; healed; w/wavy convoluted shaley partings @ 61.6-62.9'	
PQ	8	2.5	65.5 2.5	0.3	100	12	66 67 68	515 514 513	63.0 DOLOMITE; light gray & gray; micritic; fresh; very strong; very hard; banded; laminated; w/shale partings; (Bass Islands Group). shale partings - 0°,B,Pl,SR @ 64.0',64.4',64.7',65.2' 80°,J,No,No,Pl,SR @ 64.2-64.7' clay band; about 100% medium plasticity, low toughness, slow dilatancy fines; white; firm; moist; no odor; strong reaction w/HCl; homogeneous @ 65.7-65.8' 30°,J,Cl,Fi,Pl,SR @ 65.8-65.9' 0°,B,UK,Fi,Pl,SR @ 66.1'	
PQ	9	2.5	68.0 2.5	1.7	100	68	69 70	512 511	66.3 DOLOMITE; grayish brown; micritic; fresh; strong; hard; w/stylolites; (Bass Islands Group). 90°,J,Cl,Pa,WA,SR @ 66.5-67.3' 0°,B,UK,Fi,Pl,SR @ 66.5',66.8' highly fractured @ 67.3-67.5' 70°,J,No,No,Pl,SR @ 67.5-67.7' silt band; about 100% low plasticity, low toughness, rapid dilatancy fines; white; soft; moist; strong hydrocarbon odor; strong reaction w/HCl; homogeneous @ 67.7-67.8' highly fractured @ 67.8-68.0' 90°,J,Cl,Fi,Pl,SR @ 68.1-68.3' (2 parallel joints) pitted @ 68.3-68.6'	Core box #5 starts @ 68.0'. Core barrel blocked @ 68.0'.
PQ	10	5.0	70.5 5.0	5.0	100	100	71 72 73 74 75	510 509 508 507 506	68.6 DOLOMITE; light gray (2 shades); pitted; very fine grained (crystalline); fresh; very strong; hard; banded; w/closely spaced stylolites; pits 0.004-0.08"; (Bass Islands Group). very closely spaced stylolites @ 68.6-69.2' highly fractured @ 69.9-70.1' 0°,B,No,No,Pl,SR @ 71.6' very closely spaced stylolites @ 74.7-74.8'	

5/23/2008 10:46 AM DTE - Fermi 3 Geotech

BLACK & VEATCH

BORING LOG

BORING NO. RB-C6
SHEET 6 OF 17

CLIENT	PROJECT	PROJECT NO.
Detroit Edison	Fermi 3 COL Application	147483

PROJECT LOCATION	COORDINATES	GROUND ELEVATION (DATUM)	TOTAL DEPTH
Monroe, MI	N 6192.8' E 4606.0'	580.8 ft (NAVD 88)	240.0 (feet)

SURFACE CONDITIONS	COORDINATE SYSTEM	DATE START	DATE FINISHED
Gravel parking lot	Plant	06/14/07	09/19/07

LOGGED BY	CHECKED BY	APPROVED BY
GEO for TIS for Grainger/Mass/Ohlmacher	GEO Dogbey/Ohlmacher	Meyer EM

SAMPLING							CORING									
SAMPLE TYPE	SAMPLE NUMBER	SET 6 INCHES	2ND 6 INCHES	3RD 6 INCHES	N VALUE	SAMPLE RECOVERY	CORE SIZE	RUN NUMBER	RUN LENGTH	RUN RECOVERY	RQD RECOVERY	PERCENT RECOVERY	RQD	DEPTH (FEET)	SAMPLE TYPE	ELEVATION (FEET)	GRAPHIC LOG	CLASSIFICATION OF MATERIALS	REMARKS
														75				10°,B,No,No,WA,SR @ 75.0'	
										75.5								shale partings @ 75.2-75.3'	Core box #6 starts @ 75.5'.
PQ	11	3.0	3.0	1.9	100	63								76		505		very closely spaced stylolites @ 76.0-76.3'	
														77		504		0°,J,Cl,Pa,Pl,SR @ 77.1'	
																		70°,J,Cl,Fi,Pl,SR @ 77.3-77.6'	Water level @ 20.35' prior to drilling on 08/30/07.
														78		503		silt band; about 100% low plasticity, low toughness, slow dilatancy fines; gray; firm; moist; slight hydrocarbon odor; strong reaction w/HCl;	
										78.5								homogeneous @ 77.9-78.0'	Core barrel jammed @ 78.5'.
PQ	12	2.0	2.0	0.4	100	20								79		502		grades light olive gray @ 78.4'	
																		shale parting - 0°,B,Fi,Pl,SR @ 78.8'	
																501		30°,J,No,No,Pl,SR @ 78.9-79.2'	
														80				79.2	
										80.5								DOLOMITE; light gray & gray; micritic; fresh; strong; hard; banded; w/stylolites; (Bass Islands Group).	
																500		20°,J,No,No,Pl,SR @ 79.2', 79.3'	
														81				0°,B,UK,Fi,Pl,SR @ 79.8', 80.5'	
PQ	13	2.5	2.5	1.3	100	52										499		90°,J,No,No,St,R @ 79.8-80.7'	
														82				highly fractured @ 80.5-80.8'	
																498		shale parting - 20°,B,Fi,Pl,SR @ 81.0'	
														83				81.2	
										83.0								DOLOMITE; brecciated (healed); light brownish gray & grayish brown; pitted; micritic; slightly weathered; very strong; very hard; (Bass Islands Group).	
																497		shale parting - 0°,B,WA,SR @ 81.3,81.4'	
														84				70°,J,No,No,Pl,R @ 81.7-82.4'	
PQ	14	2.5	2.5	1.5	100	60										496		82.3	Core barrel blocked @ 83.0'. Core box #7 starts @ 83.2'.
														85				SHALE; very dark gray & black; laminated; slightly weathered; strong; hard; (Bass Islands Group).	
																495		highly fractured @ 82.3-82.5'	
																		thin dolomite bed; argillaceous; gray; micritic; fresh; very strong; very hard @ 82.9-83.3'	
														86		494		30°,J,No,No,Pl,SR @ 83.1-83.4'	
																		83.3	
										85.5								DOLOMITE; light gray & grayish brown; very fine grained (crystalline); slightly weathered; strong; hard; (Bass Islands Group).	
														87		493		highly fractured @ 83.3-83.4'	
																		0°,B,No,No,Pl,SR @ 84.1'	
														88		492		30°,J,No,No,Pl,SR @ 84.6-84.8',85.1-85.3'	
																		85.3	
														89		491		DOLOMITE; argillaceous; light brownish gray; very fine grained (crystalline); slightly weathered; very strong; hard; (Bass Islands Group).	
PQ	15	5.0	5.0	0.7	100	14												40°,J,Cl,Fi,Pl,SR @ 85.5-85.6'	
														90				110°,J,Cl,Fi,Pl,SR @ 85.5-85.6'	
																		60°,J,No,No,Pl,SR @ 86.0-86.4'	
																		shale parting - 10°,B,Pl,SR @ 86.9'	
																		70°,J,anhydrite,Pa,Pl,SR @ 87.0-87.4'	
																		shale parting - 10°,B,Pl,SR @ 87.8'	
																		90°,J,anhydrite,Pa,Pl,SR @ 87.8-89.0',89.5-89.9'	
																		60°,J,No,No,Pl,SR @ 88.9-89.3', 89.2-89.5', 89.8-	

BLACK & VEATCH

BORING LOG

BORING NO. RB-C6

CLIENT	PROJECT	PROJECT NO.
Detroit Edison	Fermi 3 COL Application	147483

PROJECT LOCATION	COORDINATES		GROUND ELEVATION (DATUM)	TOTAL DEPTH
Monroe, MI	N 6192.8'	E 4606.0'	580.8 ft (NAVD 88)	240.0 (feet)

SURFACE CONDITIONS	COORDINATE SYSTEM	DATE START	DATE FINISHED
Gravel parking lot	Plant	06/14/07	09/19/07

LOGGED BY	CHECKED BY	APPROVED BY
GCO for TB for GCO Grainger/Mass/Ohlmacher	Emfor GCO Dogbey/Ohlmacher	Em Meyer

SAMPLING

SAMPLE TYPE	SAMPLE NUMBER	SET 6 INCHES	2ND 6 INCHES	3RD 6 INCHES	N VALUE	SAMPLE RECOVERY

CORING

CORE SIZE	RUN NUMBER	RUN LENGTH	RUN RECOVERY	RQD RECOVERY	PERCENT RECOVERY	RQD
PQ	16	5.0	5.0	1.9	100	38
PQ	17	5.0	4.6	2.7	92	54
PQ	18	5.0	5.0	3.2	100	64

DEPTH (FEET): 90, 91, 92, 93, 94, 95, 96, 97, 98, 99, 100, 101, 102, 103, 104, 105

ELEVATION (FEET): 490, 489, 488, 487, 486, 485, 484, 483, 482, 481, 480, 479, 478, 477, 476

CLASSIFICATION OF MATERIALS

90.0'
20°,J,Cl,Pa,Pl,SR @ 89.9-90.0'

90.8

fractured @ 90.8-91.3'
DOLOMITE; crystalline; dark gray; micritic; fresh; very strong; hard; (Bass Islands Group).
85-90°,J,T,No,No,Ir,R @ 90.8-92.9'

93.0

DOLOMITE; argillaceous; gray; micritic; fresh; strong; hard; banded; w/shale partings; (Bass Islands Group).
closely spaced black shale partings @ 93.1-93.4'
anhydrite band w/shale partings @ 93.4-93.5'
90°,J,T,No,No,Ir,R @ 93.5-94.0',95.7-96.0'
convoluted bedding @ 93.8-94.4'

60°,J,N,Ca,Sp,Ir,R @ 95.5'
fractured, some clay @ 95.6-95.8'
0°,B,T,Ca,Sp,Pl,SR @ 96.1'

0°,B,T,Ca,Sp,Pl,SR @ 97.1',97.2'

0°,B,T,Ca,Sp,Pl,SR @ 97.6',97.7'
90°,J,T,No,No,Ir,R @ 97.6-97.9'

98.0

DOLOMITE; crystalline; gray; micritic; fresh; very strong; hard; massive; w/stylolites; (Bass Islands Group).
0°,B,T,Ca,Sp,Pl,SR @ 98.3',98.5',99.0',99.1',99.5'

85-90°,J,T,No,No,Ir,VR @ 100.1-100.8'

0°,B,N,UK,Sp,WA,SR @ 100.8',101.3',101.4'

0°,B,N,UK,Sp,WA,SR @ 102.5',103.2'

70°,J,T,No,No,Ir,R @ 103.2-104.0'

0°,B,N,UK,Sp,WA,SR @ 104.0'
0°,B,T,Ca,Fi @ 104.4', 104.5'

REMARKS

Core box #8 starts @ 90.5'.

Core box #9 starts @ 99.2'.

BLACK & VEATCH

BORING LOG

BORING NO. RB-C6

CLIENT	PROJECT	PROJECT NO.
Detroit Edison	Fermi 3 COL Application	147483

PROJECT LOCATION	COORDINATES	GROUND ELEVATION (DATUM)	TOTAL DEPTH
Monroe, MI	N 6192.8' E 4606.0'	580.8 ft (NAVD 88)	240.0 (feet)

SURFACE CONDITIONS	COORDINATE SYSTEM	DATE START	DATE FINISHED
Gravel parking lot	Plant	06/14/07	09/19/07

LOGGED BY	CHECKED BY	APPROVED BY
GCO for TB for Grainger/Mass/Ohlmacher	GCO Dogbey/Ohlmacher	Meyer EM

SAMPLING							CORING									
SAMPLE TYPE	SAMPLE NUMBER	SET 6 INCHES	2ND 6 INCHES	3RD 6 INCHES	N VALUE	SAMPLE RECOVERY	CORE SIZE	RUN NUMBER	RUN LENGTH	RUN RECOVERY	RQD RECOVERY	PERCENT RECOVERY	RQD	DEPTH (FEET)	SAMPLE TYPE	ELEVATION (FEET)	GRAPHIC LOG	CLASSIFICATION OF MATERIALS	REMARKS
														105				pyrite & argillaceous fracture filling @ 105.2-105.3'	Core box #10 starts @ 108.4'.
										105.5				106		475		0°,B,N,UK,Su,PI,SR @ 106.0',106.6',106.9'	
														107		474		85-90°,J,T,Ca,Pa,Ir,VR @ 106.6-108.9'	
																		107.0	
PQ	19								5.0	4.5	2.8	90	56	108		473		DOLOMITE; argillaceous; grayish brown; fresh; strong; hard; w/stylolites; (Bass Islands Group). 0°,B,N,UK,Su,PI,SR @ 107.1',107.6'	
																		fractured @ 108.2-108.8'	
														109		472		0°,B,MW,Ca,Fi,PI @ 108.9' 60°,J,T,No,No,Ir,R @ 109.0-109.6'	
														110		471			
										110.5				111		470		60°,J,MW,solutioned @ 111.1-111.3'	
														112		469			
PQ	20								5.0	3.8	3.7	76	74	113		468			
																467		113.7	
														114				SHALE; very dark gray; fissile; slightly weathered; weak; low hardness; (Salina Group - Unit F). 10°,B,T,UK,Su,Ir,R @ 113.8'	
																		114.0	
														115		466		DOLOMITE; argillaceous; banded gray (2 shades); micritic; slightly weathered; strong; hard; vuggy; (Salina Group - Unit F). 80-90°,J,N,No,No,Ir,R @ 114.7-118.0', 118.5-119.5', 119.7-120.5'	
										115.5				116		465			
PQ	21								2.5	2.5	0.4	100	16	117		464		fractured @ 116.7'	
																463			
										118.0				118					
														119		462		0°,B,N,No,No,Ir,R @ 118.5', 119.3', 119.4', 119.7', 116.0'	
PQ	22								2.5	2.3	0.4	92	16						
														120		461			

BLACK & VEATCH

BORING LOG

BORING NO. RB-C6

CLIENT	PROJECT	PROJECT NO.
Detroit Edison	Fermi 3 COL Application	147483

PROJECT LOCATION	COORDINATES	GROUND ELEVATION (DATUM)	TOTAL DEPTH
Monroe, MI	N 6192.8' E 4606.0'	580.8 ft (NAVD 88)	240.0 (feet)

SURFACE CONDITIONS	COORDINATE SYSTEM	DATE START	DATE FINISHED
Gravel parking lot	Plant	06/14/07	09/19/07

LOGGED BY	CHECKED BY	APPROVED BY
GCO for TB for Grainger/Mass/Ohlmacher	GCO for Dogbey/Ohlmacher	GCO for Meyer

SAMPLING							CORING									
SAMPLE TYPE	SAMPLE NUMBER	SET 6 INCHES	2ND 6 INCHES	3RD 6 INCHES	N VALUE	SAMPLE RECOVERY	CORE SIZE	RUN NUMBER	RUN LENGTH	RUN RECOVERY	RQD RECOVERY	PERCENT RECOVERY	RQD	DEPTH (FEET)	SAMPLE TYPE	ELEVATION (FEET)	GRAPHIC LOG	CLASSIFICATION OF MATERIALS	REMARKS
														120					
PQ	23	1.0	120.5 1.0	0.0	100	0								121		460		121.3 DOLOMITE; argillaceous; dark greenish gray; micritic; fresh; very strong; banded; (Salina Group - Unit F). highly fractured @ 121.5-125.0'	Core box #11 starts @ 120.5'. Water level @ 21.3' prior to drilling on 08/14/07. NQ core barrel used @ 121.5-126.5' for pressuremeter testing. After testing interval reamed with PQ core barrel.
NQ	24	5.0	121.5 2.7	0.0	54	0								122		459			
														123		458		anhydrite veins, beds & bands @ 123.0-123.8'	
														124		457			
														125		456		125.0 DOLOMITE; light gray; pitted; fine grained; slightly weathered; strong; hard; parting; some oolites (5-15%); (Salina Group - Unit F). 0°,V,MW,Ca,Fi,WA,SR @ 125.3'	
														126		455		0°,B,T,No,No,Pl,S @ 126.3', 126.8' grades w/no pits @ 126.3'	
PQ	25	4.0	126.5 4.0	2.0	100	50								127		454		126.5 DOLOMITE; argillaceous; bluish gray; micritic; fresh; very strong; hard; banded; (Salina Group - Unit F).	127.0-127.8' claystone wrapped in plastic
														128		453		127.0 CLAYSTONE; bluish gray; fresh; extremely weak; soft; massive; (Salina Group - Unit F).	
														129		452		127.8 SHALE; calcareous; banded grayish brown to bluish gray; fissile; fresh; weak; low hardness; (Salina Group - Unit F).	
														130		451		129.8 CLAYSTONE; bluish gray; fresh; extremely weak; low hardness; massive; (Salina Group - Unit F).	
PQ	26	5.0	130.5 5.0	2.5	100	50								131		450		130.0 SHALE; bluish gray; fissile; fresh; weak; low hardness; (Salina Group - Unit F).	
														132		449		130.7 CLAYSTONE; calcareous; bluish gray; fresh; strong; moderately hard; massive; (Salina Group - Unit F). 0°,J,T,No,No,WA,S @ 131.6', 131.8', 132.4'	Core box #12 starts @ 131.9'.
														133		448		132.8 SHALE; calcareous; bluish gray; fissile; fresh; weak; low hardness; banded; (Salina Group - Unit F). highly fractured @ 133.3-134.4'	
														134		447			Discrete sample 12A taken from PQ26 @ 134.7-135.5'.
														135		446			

BLACK & VEATCH

BORING LOG

BORING NO. RB-C6

CLIENT	PROJECT	PROJECT NO.
Detroit Edison	Fermi 3 COL Application	147483

PROJECT LOCATION	COORDINATES		GROUND ELEVATION (DATUM)	TOTAL DEPTH
Monroe, MI	N 6192.8'	E 4606.0'	580.8 ft (NAVD 88)	240.0 (feet)

SURFACE CONDITIONS	COORDINATE SYSTEM	DATE START	DATE FINISHED
Gravel parking lot	Plant	06/14/07	09/19/07

LOGGED BY	CHECKED BY	APPROVED BY
GEO for TB for GEO Grainger/Mass/Ohlmacher	Em for GEO Dogbey/Ohlmacher	Meyer Em

SAMPLE TYPE	SAMPLE NUMBER	SET 6 INCHES	2ND 6 INCHES	3RD 6 INCHES	N VALUE	SAMPLE RECOVERY	DEPTH (FEET)	ELEVATION (FEET)	CLASSIFICATION OF MATERIALS	REMARKS
							135			
			135.5						135.5	
PQ	27	1.5	0.5	0.0	33	0	136	445	SHALE; w/siltstone interbeds; bluish gray; fresh; very weak; low hardness; banded; (Salina Group - Unit G).	
								444		
			137.0				137			NQ core barrel used @ 137.0-142.0' for pressuremeter testing. Interval reamed w/PQ core barrel after test.
								443	limestone; brown @ 137.3-137.5'	
							138			
									138.5	
								442	DOLOMITE; argillaceous; greenish gray to dark bluish gray; micritic; fresh; strong; hard; banded; (Salina Group - Unit F). highly fractured @ 138.5-140.5'	
NQ	28	5.0	1.7	0.0	34	0	139			
								441	139.8	
							140		SHALE; calcareous; bluish gray; fissile; fresh; strong; moderately hard; (Salina Group - Unit F).	
							141	440		
								439		
			142.0				142		claystone band interbedded w/shale @ 142.0'	
							143	438	dolomite band; highly fractured @ 143.1-143.2',143.5-143.7'	
PQ	29	3.5	2.4	1.5	69	43	144	437		144.0-145.0 sample wrapped in plastic
							145	436		
			145.5							Core box #13 starts @ 145.5'.
							146	435		
							147	434		
PQ	30	5.0	4.8	3.5	96	70	148	433	thin limestone bed; greenish gray; vuggy; highly fractured @ 147.8-148.1'	
									dolomite band; highly fractured @ 148.5-148.7'	
							149	432	highly fractured @ 149.0-149.2'	
							150	431		

5/23/2008 10:46 AM DTE - Fermi 3 Geotech

BLACK & VEATCH

BORING LOG

BORING NO. RB-C6

CLIENT	PROJECT	PROJECT NO.
Detroit Edison	Fermi 3 COL Application	147483

PROJECT LOCATION	COORDINATES	GROUND ELEVATION (DATUM)	TOTAL DEPTH
Monroe, MI	N 6192.8' E 4606.0'	580.8 ft (NAVD 88)	240.0 (feet)

SURFACE CONDITIONS	COORDINATE SYSTEM	DATE START	DATE FINISHED
Gravel parking lot	Plant	06/14/07	09/19/07

LOGGED BY	CHECKED BY	APPROVED BY
GEC for MB Grainger/Mass/Ohlmacher	GEC for EM Dogbey/Ohlmacher	EM Meyer

SAMPLING							CORING									
SAMPLE TYPE	SAMPLE NUMBER	SET 6 INCHES	2ND 6 INCHES	3RD 6 INCHES	N VALUE	SAMPLE RECOVERY	CORE SIZE	RUN NUMBER	RUN LENGTH	RUN RECOVERY	RQD RECOVERY	PERCENT RECOVERY	RQD	DEPTH (FEET)	SAMPLE TYPE	ELEVATION (FEET)	GRAPHIC LOG	CLASSIFICATION OF MATERIALS	REMARKS
														150					
										150.5				151		430			
																		—151.3— BRECCIA; poorly indurated; calcareous shale clasts in claystone matrix; (Salina Group - Unit F).	
														152		429		—151.8— SHALE; calcareous; bluish gray; fissile; fresh; strong; moderately hard; (Salina Group - Unit F).	
PQ	31	5.0	3.0	1.0	60	20								153		428		thin dolomite bed; highly fractured @ 153.3-153.7'	
														154		427		highly fractured @ 154.0-154.4'	
														155		426		highly fractured @ 155.0-158.3'	
										155.5				156		425			Core box #14 starts @ 155.5'. 155.7-157.8 wrapped in plastic
PQ	32	2.5	2.5	1.9	100	76								157		424		siltstone band; calcareous; light gray @ 156.7-156.9'	
																		soft sediment deformation, contorted bedding; moderately indurated @ 157.1-157.3'	
										158.0				158		423			
																		—158.5— CLAYSTONE; bluish gray; fresh; extremely weak; soft; w/dolomite bands; (Salina Group - Unit F).	NQ core barrel used @ 158.0-163.5' for pressuremeter test. Interval reamed w/PQ core barrel after test.
NQ	33	5.5	1.8	0.0	33	0								159		422			
														160		421			
														161		420			
														162		419		—162.0— DOLOMITE; argillaceous; gray; micritic; fresh; strong; moderately hard; banded; (Salina Group - Unit F). highly fractured @ 162.0-162.5'	
														163		418		—162.8— CLAYSTONE; bluish gray; (Salina Group - Unit F).	claystone based on reaming run 33 w/PQ
										163.5				164		417			
PQ	34	2.0	0.4	0.4	20	20								165		416		dolomite; w/anhydrite nodule @ 164.3-164.7'	

BLACK & VEATCH

BORING LOG

BORING NO. RB-C6

CLIENT	PROJECT	PROJECT NO.
Detroit Edison	Fermi 3 COL Application	147483

PROJECT LOCATION	COORDINATES	GROUND ELEVATION (DATUM)	TOTAL DEPTH
Monroe, MI	N 6192.8' E 4606.0'	580.8 ft (NAVD 88)	240.0 (feet)

SURFACE CONDITIONS	COORDINATE SYSTEM	DATE START	DATE FINISHED
Gravel parking lot	Plant	06/14/07	09/19/07

LOGGED BY	CHECKED BY	APPROVED BY
GCO for JB for Grainger/Mass/Ohlmacher	GCO for Dogbey/Ohlmacher	Meyer

SAMPLING: SAMPLE TYPE	SAMPLE NUMBER	SET 6 INCHES	2ND 6 INCHES	3RD 6 INCHES	N VALUE	SAMPLE RECOVERY	CORING: CORE SIZE	RUN NUMBER	RUN LENGTH	RUN RECOVERY	RQD RECOVERY	PERCENT RECOVERY	RQD	DEPTH (FEET)	SAMPLE TYPE	ELEVATION (FEET)	GRAPHIC LOG	CLASSIFICATION OF MATERIALS	REMARKS
														165					
										165.5						415			
														166				165.9 DOLOMITE; gray; highly fractured; (Salina Group - Unit F).	
PQ	35	2.5	1.4	0.4	56	16										414		166.4 SHALE; dark bluish gray to light gray; fissile; fresh; moderately strong; low hardness; w/dolomite interbeds; (Salina Group - Unit F).	wrapped 0.4' shale in plastic
														167				dolomite band; gray; highly fractured @ 167.0-167.2'	
																413			
										168.0				168				thin dolomite bed; gray; highly fractured @ 168.0-168.4'	NQ core barrel used @ 168.0-173.5' for pressuremeter test. Interval reamed w/PQ core barrel after test.
																412		168.5 CLAYSTONE; gray; fresh; very weak; friable; (Salina Group - Unit F).	
														169					
																411			
														170					
NQ	36	5.5	0.8	0.0	15	0										410			
														171					
																409			
														172					
																408			
														173				173.3 BRECCIA; indurated calcite matrix & clay matrix; dolomite & dolomitic shale clasts, angular; dark bluish gray; very coarse grained (> 1") to very fine grained; fresh; strong; hard; (Salina Group - Unit F).	Water level @ 20.72' prior to drilling on 09/16/07.
										173.5						407			
PQ	37	1.0	1.0	1.0	100	100								174					
																406			Core box #15 starts @ 174.5'. 175.0-175.6' ground-up core
										174.5				175					
																405			
														176					
																404		grades pale brown; argillaceous dolomite clasts; moderately weathered (clasts weathered when deposited, matrix is fresh) @ 176.5'	
PQ	38	5.5	5.0	3.7	91	67								177				unconformity (erosion surface) @ 177.3'	
																403		clast > 4.5" @ 177.5'	
														178					
																402		grades 15% vugs; brown limestone clasts; banded @ 178.6	
														179					
														180		401			

BLACK & VEATCH

BORING LOG

BORING NO. RB-C6

CLIENT	PROJECT	PROJECT NO.
Detroit Edison	Fermi 3 COL Application	147483

PROJECT LOCATION	COORDINATES	GROUND ELEVATION (DATUM)	TOTAL DEPTH
Monroe, MI	N 6192.8' E 4606.0'	580.8 ft (NAVD 88)	240.0 (feet)

SURFACE CONDITIONS	COORDINATE SYSTEM	DATE START	DATE FINISHED
Gravel parking lot	Plant	06/14/07	09/19/07

LOGGED BY	CHECKED BY	APPROVED BY
GCO for TJS for Grainger/Mass/Ohlmacher	GCO Eng for Dogbey/Ohlmacher	Em Meyer

SAMPLING							CORING									
SAMPLE TYPE	SAMPLE NUMBER	SET 6 INCHES	2ND 6 INCHES	3RD 6 INCHES	N VALUE	SAMPLE RECOVERY	CORE SIZE	RUN NUMBER	RUN LENGTH	RUN RECOVERY	RQD RECOVERY	PERCENT RECOVERY	RQD	DEPTH (FEET)	SAMPLE TYPE	ELEVATION (FEET)	GRAPHIC LOG	CLASSIFICATION OF MATERIALS	REMARKS
										180.0				180					NQ core barrel used @ 180.0-185.0' for pressuremeter test. Interval reamed w/PQ core barrel after test.
																400		180.6 CLAYSTONE & BRECCIA; dark bluish gray; (Salina Group - Unit F).	
														181					
																399		181.7 BRECCIA; indurated calcite matrix & clay matrix; brown limestone clasts; dark bluish gray; very coarse grained (> 1") to very fine grained; fresh; strong; hard; (Salina Group - Unit F).	
														182					
NQ	39	5.0	1.7	0.0	34	0										398			
														183					
																397		grades clasts; dark brown; fresh; 15% vugs @ 184.0'.	
														184					
																396			
										185.0				185					
PQ	40	0.5	0.5	0.0	100	0												grades shale clasts; gray; white calcite matrix; limestone clasts & clay matrix grade out @ 185.5'	
										185.5						395		185.9 CLAYSTONE; dark bluish gray to light greenish gray; fresh; moderately strong; low hardness; massive; (Salina Group - Unit F). 0°,J,T,No,No,Pl,S @ 186.6', 189.3' highly fractured @ 187.1-187.5'	
														186					
																394			Core box #16 starts @ 187.0'.
														187					
																393		187.5 SHALE; greenish gray; fresh; moderately strong; low hardness; banded; (Salina Group - Unit F).	
PQ	41	5.5	5.2	3.8	95	69								188				188.2 BRECCIA; poorly indurated to indurated calcite matrix; shale & limestone clasts; greenish gray & white; very coarse grained to micritic; fresh; moderately strong; low hardness; (Salina Group - Unit F). 0°,J,VN,No,No,Pl,SR @ 188.8',189.1' highly fractured @ 189.1-189.3'	
																392			
														189					
																391		189.3 LIMESTONE; brown; micritic; fresh; top of limestone moderately weathered; strong; hard; 10% vugs; (Salina Group - Unit F). 0°,J,VN,No,No,Pl,SR @ 189.9',190.1'	
														190					
																390			
										191.0				191					NQ core barrel used @ 191.0-197.0' for pressuremeter test. Interval reamed w/PQ core barrel after test.
														192		389			
																388			
NQ	42	5.0	1.4	0.0	28	0								193					Core barrel blocked
																387			
														194					
														195		386			

BLACK & VEATCH

BORING LOG

BORING NO. RB-C6
SHEET 14 OF 17

CLIENT	PROJECT	PROJECT NO.
Detroit Edison	Fermi 3 COL Application	147483

PROJECT LOCATION	COORDINATES	GROUND ELEVATION (DATUM)	TOTAL DEPTH
Monroe, MI	N 6192.8' E 4606.0'	580.8 ft (NAVD 88)	240.0 (feet)

SURFACE CONDITIONS	COORDINATE SYSTEM	DATE START	DATE FINISHED
Gravel parking lot	Plant	06/14/07	09/19/07

LOGGED BY	CHECKED BY	APPROVED BY
GHO for TB for GCO Grainger/Mass/Ohlmacher	GCO Empa Dogbey/Ohlmacher	Em Meyer

SAMPLING: SAMPLE TYPE	SAMPLE NUMBER	SET 6 INCHES	2ND 6 INCHES	3RD 6 INCHES	N VALUE	SAMPLE RECOVERY	CORING: CORE SIZE	RUN NUMBER	RUN LENGTH	RUN RECOVERY	RQD RECOVERY	PERCENT RECOVERY	RQD	DEPTH (FEET)	SAMPLE TYPE	ELEVATION (FEET)	GRAPHIC LOG	CLASSIFICATION OF MATERIALS	REMARKS
														195		385			
										196.0				196					
NQ	43	1.0	0.4	0.0	40	0										384			
										197.0				197				197.1	
PQ	44	1.0	0.8	0.4	80	40										383		LIMESTONE; dark bluish gray; micritic; fresh; strong; hard; w/calcite nodules; (Salina Group - Unit F).	
										198.0				198					NQ core barrel used @ 198.0-203.0' for pressuremeter test. Interval reamed w/PQ core barrel after test.
																382			
														199				grades 5% vugs @ 199.0'	
																381			
														200					
NQ	45	5.0	0.9	0.0	18	0										380			Run 45 recovery & RQD recovery not valid because driller did not insert core barrel prior to drilling run 45. Driller reported a drop of 2.5" @ 200.5'.
														201					
																379			
														202					
																378			
				203.0										203					
PQ	46	1.0	0.7	0.7	70	70										377		grades brown & bluish gray; 15% vugs; some brachiopod fossils @ 203.1'	
				204.0										204					NQ core barrel used @ 204.0-209.5' for pressuremeter test. Interval reamed w/PQ core barrel after test.
																376			
														205				grades no vugs @ 205.5'	
																375			
														206				206.0	
NQ	47	5.0	1.4	0.0	28	0										374		LIMESTONE; oolitic; grayish brown; (Salina Group - Unit F).	
														207				90°,V,VN,Ca,Fi,PI,S @ 206.3-206.5'	
																373		206.5 LIMESTONE; brown & bluish gray; micritic; fresh; strong; hard; w/calcite nodules; some brachiopod fossils; (Salina Group - Unit F).	
														208					
																372			
				209.0										209					Core box #17 starts @ 209.0'.
PQ	48	1.0	1.0	0.0	100	0										371		209.3 DOLOMITE; argillaceous; light brownish gray; micritic; fresh; strong; hard; massive; (Salina Group - Unit F).	
														210					

BLACK & VEATCH

BORING LOG

BORING NO. RB-C6

CLIENT	PROJECT	PROJECT NO.
Detroit Edison	Fermi 3 COL Application	147483

PROJECT LOCATION	COORDINATES	GROUND ELEVATION (DATUM)	TOTAL DEPTH
Monroe, MI	N 6192.8' E 4606.0'	580.8 ft (NAVD 88)	240.0 (feet)

SURFACE CONDITIONS	COORDINATE SYSTEM	DATE START	DATE FINISHED
Gravel parking lot	Plant	06/14/07	09/19/07

LOGGED BY	CHECKED BY	APPROVED BY
GCO for TB for Grainger/Mass/Ohlmacher	GCO Dogbey/Ohlmacher	GCO Meyer

SAMPLING							CORING									
SAMPLE TYPE	SAMPLE NUMBER	SET 6 INCHES	2ND 6 INCHES	3RD 6 INCHES	N VALUE	SAMPLE RECOVERY	CORE SIZE	RUN NUMBER	RUN LENGTH	RUN RECOVERY	RQD RECOVERY	PERCENT RECOVERY	RQD	DEPTH (FEET)	SAMPLE TYPE	ELEVATION (FEET)

CLASSIFICATION OF MATERIALS	REMARKS
0°,J,VN,Ca,Pa,Pl,S @ 209.3-209.7' highly fractured @ 209.3-209.5' 55°,J,VN,Ca,Pa,Pl,S @ 209.6-210.0' 80°,J,VN,Ca,Pa,Pl,S @ 209.8-210.0'	NQ core barrel used @ 210.0-215.0' for pressuremeter test. Interval reamed w/PQ core barrel after test.
211.0	
LIMESTONE; brown; vuggy; micritic; fresh; strong; hard; (Salina Group - Unit F).	
212.2	
DOLOMITE; argillaceous; light brownish gray; micritic; fresh; strong; hard; (Salina Group - Unit F). 90°,J,VN,Ca,Pa,Pl,S @ 212.3-213.0'	During reaming, drill locked in boring & freed @ 210.5'.
213.5	
LIMESTONE; brown; vuggy; micritic; fresh; strong; hard; fossils; oolites; (Salina Group - Unit F). 90°,J,VN,Ca,Pa,Pl,S @ 213.5-213.7'	Plugged w/clay/ gravel from reamed interval.
highly fractured @ 215.1-215.3'	Water level @ 23.41' prior to drilling on 09/18/07.
highly fractured @ 215.8-215.9'	
0°,J,N,No,No,Pl,R @ 216.3' grades interbedded limestone & pale brown dolomite @ 216.3' 1.5" chert nodule @ 216.4' 0°,B,N,No,No,Pl,SR @ 216.5' highly fractured @ 216.5-216.9' 90°,J,N,Ca,Pa,WA,SR @ 217.0-217.3' highly fractured @ 217.3-217.4'	
217.4	
DOLOMITE; argillaceous; pale brown; micritic; fresh; strong; hard; few fossils (ostracodes); (Salina Group - Unit F). 90°,J,N,Ca,Pa,WA,SR @ 217.4-218.2', 218.2-218.9' highly fractured @ 218.2-218.5'	
219.1	
SHALE; bluish gray to dark bluish gray; fresh; moderately strong to very weak; friable; (Salina Group - Unit F).	Core box #18 starts @ 220.5'.
220.7	
LIMESTONE; dark bluish gray; micritic; fresh; strong; moderately hard; banded; w/shale bands; (Salina Group - Unit F).	
221.7	
CLAYSTONE; dark bluish gray; fresh; weak; low hardness; interbedded w/dolomite & limestone; (Salina Group - Unit F).	

SAMPLE TYPE	SAMPLE NUMBER	CORE SIZE	RUN NUMBER	RUN LENGTH	RUN RECOVERY	RQD RECOVERY	PERCENT RECOVERY	RQD
					210.0			
NQ			49	5.0	2.1	0.0	42	0
					215.0			
PQ			50	5.5	4.9	2.8	89	51
					220.5			
PQ			51	4.5	1.3	0.0	29	0

DEPTH (FEET)	ELEVATION (FEET)
210	370
211	369
212	368
213	367
214	366
215	365
216	364
217	363
218	362
219	361
220	360
221	359
222	358
223	357
224	356
225	

BLACK & VEATCH

BORING LOG

BORING NO. RB-C6
SHEET 16 OF 17

CLIENT	PROJECT	PROJECT NO.
Detroit Edison	Fermi 3 COL Application	147483

PROJECT LOCATION	COORDINATES	GROUND ELEVATION (DATUM)	TOTAL DEPTH
Monroe, MI	N 6192.8' E 4606.0'	580.8 ft (NAVD 88)	240.0 (feet)

SURFACE CONDITIONS	COORDINATE SYSTEM	DATE START	DATE FINISHED
Gravel parking lot	Plant	06/14/07	09/19/07

LOGGED BY GCO for TB for Grainger/Mass/Ohlmacher
CHECKED BY GCO for Dogbey/Ohlmacher
APPROVED BY for Meyer

SAMPLING							CORING										
SAMPLE TYPE	SAMPLE NUMBER	SET 6 INCHES	2ND 6 INCHES	3RD 6 INCHES	N VALUE	SAMPLE RECOVERY	CORE SIZE	RUN NUMBER	RUN LENGTH	RUN RECOVERY	RQD RECOVERY	PERCENT RECOVERY	RQD	DEPTH (FEET)	SAMPLE TYPE	ELEVATION (FEET)	GRAPHIC LOG
							NQ	52	4.0	4.0	0.0	100	0	225		355	
														226		354	
														227		353	
														228		352	
							PQ	53	1.5	1.5	0.0	100	0	229		351	
														230		350	
							NQ	54	5.0	2.3	0.0	46	0	231		349	
														232		348	
														233		347	
														234		346	
														235		345	
							PQ	55	1.0	0.8	0.0	80	0	236		344	
							NQ	56	3.5	1.8	0.0	51	0	237		343	
														238		342	
														239		341	
														240			

CLASSIFICATION OF MATERIALS	REMARKS
225.0 dolomite & limestone interbeds grade out @ 225.0'	NQ core barrel used @ 225.0-229.0' for pressuremeter test. Interval reamed w/PQ core barrel after test.
dolomite parting @ 227.5' silty sandy clay @ 227.8-228.2'	
229.0 230.0 SANDSTONE; dark grayish brown; fresh; strong; moderately hard; calcite cement; (Salina Group - Unit F).	
230.4 CLAYSTONE; dark bluish gray; fresh; weak; low hardness; (Salina Group - Unit F).	NQ core barrel used @ 230.5-235.5' for pressuremeter test. Interval reamed w/PQ core barrel after test.
231.5 SAND, SILT & CLAY; (Salina Group - Unit F).	
232.5 CLAYSTONE; dark bluish gray; fresh; weak; low hardness; (Salina Group - Unit F). thin dolomite bed @ 232.5-232.8'	
235.5	Water level @ 24.81' prior to start of drilling on 09/19/07. Core box #19 starts @ 235.5'.
236.3 LIMESTONE; bluish gray & brown; micritic; fresh; strong; hard; w/white calcite filled vugs; (Salina Group - Unit F).	
236.5 238.0 DOLOMITE; grayish brown; micritic; fresh; strong; hard; fossils (ostracodes); (Salina Group - Unit E).	
	Diamonds stripped from NQ bit @ 240.0'.

5/23/2008 10:46 AM DTE - Fermi 3 Geotech

BLACK & VEATCH

BORING LOG

BORING NO. RB-C6
SHEET 17 OF 17

CLIENT	PROJECT	PROJECT NO.
Detroit Edison	Fermi 3 COL Application	147483

PROJECT LOCATION	COORDINATES	GROUND ELEVATION (DATUM)	TOTAL DEPTH
Monroe, MI	N 6192.8' E 4606.0'	580.8 ft (NAVD 88)	240.0 (feet)

SURFACE CONDITIONS	COORDINATE SYSTEM	DATE START	DATE FINISHED
Gravel parking lot	Plant	06/14/07	09/19/07

LOGGED BY	CHECKED BY	APPROVED BY
GCO for TB for Grainger/Mass/Ohlmacher	GCO Dogbey/Ohlmacher	Meyer EM

SAMPLING: SAMPLE TYPE | SAMPLE NUMBER | SET 6 INCHES | 2ND 6 INCHES | 3RD 6 INCHES | N VALUE | SAMPLE RECOVERY

CORING: CORE SIZE | RUN NUMBER | RUN LENGTH | RUN RECOVERY | RQD RECOVERY | PERCENT RECOVERY | RQD

DEPTH (FEET)	SAMPLE TYPE	ELEVATION (FEET)	GRAPHIC LOG	CLASSIFICATION OF MATERIALS	REMARKS
240		340			Bottom of boring @ 240.0'. Water level @ 24.6' @ completion of drilling. Boring backfilled w/ bentonite chips to 200.0' on 09/19/07. Boring backfilled w/ bentonite chips to 50.0' on 09/20/07. Boring backfilled w/ bentonite chips & gravel near the surface on 09/21/07.
241		339			
242		338			
243		337			
244		336			
245		335			
246		334			
247		333			
248		332			
249		331			
250		330			
251		329			
252		328			
253		327			
254		326			
255					

BLACK & VEATCH

BORING LOG

BORING NO. RB-C7

SHEET 1 OF 19

CLIENT	PROJECT	PROJECT NO.
Detroit Edison	Fermi 3 COL Application	147483

PROJECT LOCATION	COORDINATES	GROUND ELEVATION (DATUM)	TOTAL DEPTH
Monroe, MI	N 6117.0' E 4450.0'	580.5 ft (NAVD 88)	272.0 (feet)

SURFACE CONDITIONS	COORDINATE SYSTEM	DATE START	DATE FINISHED
Level, gravel parking area	Plant	06/14/07	06/26/07

LOGGED BY	CHECKED BY	APPROVED BY
GCO for TB / TB for Grainger/Bonnie/Mass	EM for TB Dogbey/Bonnie	EM Meyer

SAMPLING							CORING									
SAMPLE TYPE	SAMPLE NUMBER	SET 6 INCHES	2ND 6 INCHES	3RD 6 INCHES	N VALUE	SAMPLE RECOVERY	CORE SIZE	RUN NUMBER	RUN LENGTH	RUN RECOVERY	RQD RECOVERY	PERCENT RECOVERY	RQD	DEPTH (FEET)	SAMPLE TYPE	ELEVATION (FEET)	GRAPHIC LOG	CLASSIFICATION OF MATERIALS	REMARKS
														0		580		Poorly graded GRAVEL with Sand (GP) - About 75% fine to coarse, angular, hard gravel w/max. size 3"; about 20% fine to coarse, angular, hard sand; brownish gray; moist; strong reaction w/HCl; homogeneous; (Fill).	Boring advanced w/vacuum excavation.
														1		579			
														2		578			
														3		577			
														4		576			
														5		575			
														6		574			Below 5.5' continue w/4¼" ID, 8" OD hollow stem augers. SPT performed w/D-50 automatic hammer.
														7		573			
														8		572			
														9		571			
CA	1	4	3	4	7	1.2								10		570		grades very loose; w/maximum size 1½" @ 10.0'	
														11		569			
														12		568			
														13		567			
														14		566			
														14.5				Lean CLAY (CL) - About 93% LL=47,PL=18, no	
														15					

8/22/2008 10:20 AM DTE - Fermi 3 Geotech

BLACK & VEATCH **BORING LOG**

CLIENT	PROJECT	PROJECT NO.
Detroit Edison	Fermi 3 COL Application	147483

PROJECT LOCATION	COORDINATES	GROUND ELEVATION (DATUM)	TOTAL DEPTH
Monroe, MI	N 6117.0' E 4450.0'	580.5 ft (NAVD 88)	272.0 (feet)

SURFACE CONDITIONS	COORDINATE SYSTEM	DATE START	DATE FINISHED
Level, gravel parking area	Plant	06/14/07	06/26/07

LOGGED BY	CHECKED BY	APPROVED BY
Grainger/Bonnie/Mass	Dogbey/Bonnie	Meyer

SAMPLING: SAMPLE TYPE	SAMPLE NUMBER	SET 6 INCHES	2ND 6 INCHES	3RD 6 INCHES	N VALUE	SAMPLE RECOVERY	CORING: CORE SIZE	RUN NUMBER	RUN LENGTH	RUN RECOVERY	RQD RECOVERY	PERCENT RECOVERY	RQD	DEPTH (FEET)	ELEVATION (FEET)	CLASSIFICATION OF MATERIALS	REMARKS
CA	2	2	2	4	6	1.7								15	565	dilatancy, high dry strength fines; about 7% fine, rounded, hard sand; gray & brown, mottled; firm; moist; no reaction w/HCl; homogeneous; w/trace of peat @ 14.5'; (Lacustrine Deposit).	
														16	564		
														17	563		
																17.5	
														18	562	Lean CLAY with Sand (CL) - About 81% LL=30,PL= 15 fines; brown; hard; moist; about 18% rounded, hard sand; about 1% gravel.	Change in drilling reaction @ 17.5'. TV = 2.0 TSF @ 21.5'
														19	561		
TW	3					1.8								20	560		
														21	559		
														22	558		
														23	557		
																23.0	
														24	556	Lean CLAY with Sand (CL) - About 75% medium plasticity, medium toughness, slow dilatancy, high dry strength fines; about 15% fine to coarse, rounded to subangular, hard sand; about 10% gravel; dark gray; hard; moist; strong reaction w/HCl; homogeneous; (Glacial Till).	Change in drill reaction @ 23.0'.
SPT	4	13	20	28	48	1.3								25	555		
														26	554		
														27	553		
														28	552	grades w/cobbles	
														29	551		
														30		29.5	
																DOLOMITE; dark gray; micritic; slightly weathered;	Auger refusal @ 29.5'.

BLACK & VEATCH

BORING LOG

BORING NO. RB-C7

CLIENT	PROJECT	PROJECT NO.
Detroit Edison	Fermi 3 COL Application	147483

PROJECT LOCATION	COORDINATES	GROUND ELEVATION (DATUM)	TOTAL DEPTH
Monroe, MI	N 6117.0' E 4450.0'	580.5 ft (NAVD 88)	272.0 (feet)

SURFACE CONDITIONS	COORDINATE SYSTEM	DATE START	DATE FINISHED
Level, gravel parking area	Plant	06/14/07	06/26/07

LOGGED BY	CHECKED BY	APPROVED BY
CCC for TB TB for Grainger/Bonnie/Mass	Em for TB for Dogbey/Bonnie	Em Meyer

SAMPLING							CORING										
SAMPLE TYPE	SAMPLE NUMBER	SET 6 INCHES	2ND 6 INCHES	3RD 6 INCHES	N VALUE	SAMPLE RECOVERY	CORE SIZE	RUN NUMBER	RUN LENGTH	RUN RECOVERY	RQD RECOVERY	PERCENT RECOVERY	RQD	DEPTH (FEET)	SAMPLE TYPE	ELEVATION (FEET)	GRAPHIC LOG

CLASSIFICATION OF MATERIALS	REMARKS
very strong; very hard; fractured; (Bass Islands Group).	Below 29.5' continued w/4½" tricone bit using water as drilling fluid. Tricone bit refusal @ 30.5'. Below 30.5' continued w/ triple tube wire line core barrel w/diamond bit using water as drilling fluid. Core box #1 starts @ 30.5'. Set nominal 4½" temporary steel casing to 33.5'. Casing shoe bit failed @ 33.5'. Drilled w/tricone bit to remove metal shoe parts in hole @ 35.5-36.5'.
90°,J,T,No,No,Pl,R @ 33.5-34.3', 38.1-38.3'	
34.5	
DOLOMITE; gray; micritic; fresh; strong; hard; banded; w/argillaceous dolomite; (Bass Islands Group).	
0°,J,T,Cl,Pa,Pl,SR @ 37.5'	
70°,J,T,No,No,Pl,SR @ 37.5-38.0'	
90°,J,T,No,No,WA,R @ 38.7-39.0'	
highly fractured @ 39.0-41.1'	
41.5	
DOLOMITE; light gray; micritic; fresh; strong; hard; mottled; (Bass Islands Group).	
60°,J,T,No,No,Pl,SR @ 42.5-42.7'	
0°,J,T,No,No,WA,SR @ 42.7', 41.1'	
30°,J,T,No,No,Pl,SR @ 43.0-43.3'	
highly fractured @ 43.5-44.0'	
44.5	
BRECCIA; cemented; brown; medium to coarse	

SAMPLE TYPE	SAMPLE NUMBER	SET 6 INCHES	2ND 6 INCHES	3RD 6 INCHES	N VALUE	SAMPLE RECOVERY	CORE SIZE	RUN NUMBER	RUN LENGTH	RUN RECOVERY	RQD RECOVERY	PERCENT RECOVERY	RQD
										30.5			
							HQ	1	2.5	1.5	0.0	60	0
										33.0			
							HQ	2	1.5	1.0	0.8	67	53
										34.5			
							HQ	3	1.0	0.8	0.6	80	60
										35.5			
										36.5			
							HQ	4	2.5	2.5	1.7	100	68
										39.0			
							HQ	5	5.0	4.3	0.5	86	10
										44.0			

DEPTH (FEET)	ELEVATION (FEET)
30	550
31	549
32	548
33	547
34	546
35	545
36	544
37	543
38	542
39	541
40	540
41	539
42	538
43	537
44	536
45	

BLACK & VEATCH

BORING LOG

BORING NO. RB-C7

CLIENT	PROJECT	PROJECT NO.
Detroit Edison	Fermi 3 COL Application	147483

PROJECT LOCATION	COORDINATES	GROUND ELEVATION (DATUM)	TOTAL DEPTH
Monroe, MI	N 6117.0' E 4450.0'	580.5 ft (NAVD 88)	272.0 (feet)

SURFACE CONDITIONS	COORDINATE SYSTEM	DATE START	DATE FINISHED
Level, gravel parking area	Plant	06/14/07	06/26/07

LOGGED BY	CHECKED BY	APPROVED BY
GW for TB TB for Grainger/Bonnie/Mass	EM for TB for Dogbey/Bonnie	EM Meyer

SAMPLING							CORING									
SAMPLE TYPE	SAMPLE NUMBER	SET 6 INCHES	2ND 6 INCHES	3RD 6 INCHES	N VALUE	SAMPLE RECOVERY	CORE SIZE	RUN NUMBER	RUN LENGTH	RUN RECOVERY	RQD RECOVERY	PERCENT RECOVERY	RQD	DEPTH (FEET)	SAMPLE TYPE	ELEVATION (FEET)

CORE SIZE	RUN NUMBER	RUN LENGTH	RUN RECOVERY	RQD RECOVERY	PERCENT RECOVERY	RQD	DEPTH (FEET)	ELEVATION (FEET)	CLASSIFICATION OF MATERIALS	REMARKS
							45	535	grained; fresh; strong; hard; (Bass Islands Group). 90°,J,T,No,No,Pl,SR @ 44.6-45.1' 45°,J,T,No,No,WA,R @ 45.1-45.3'	
HQ	6	5.0	4.7	1.6	94	32	46	534		
							47	533	bedding @ 46.9', 46.4' 30°,J,T,No,No,WA,R @ 47.0'	
							48	532	calcite filled vug @ 47.8-48.0'	Core box #2 starts @ 47.5'.
									48.0 DOLOMITE; pale brown, banded; micritic; fresh; strong; hard; (Bass Islands Group).	
			49.0				49	531	60°,J,T,UK,Pa,Pl,SR @ 49.2-49.6'	
HQ	7	5.0	5.0	4.7	100	94	50	530		
							51	529		
							52	528		
							53	527	some calcite crystals @ 52.8-53.4'	
			54.0				54	526	90°,J,T,No,No,WA,SR @ 54.1-57.3'	
							55	525	55.2 SHALE; black; weathered; (Bass Islands Group). 55.3	
							56	524	DOLOMITE; light gray & dark gray, mottled; (Bass Islands Group). 55.5	
HQ	8	5.0	5.0	4.4	100	88	57	523	DOLOMITE; oolitic; grayish brown; micritic; fresh; strong; hard; massive; (Bass Islands Group). 70°,J,T,No,No,Pl,SR @ 55.5-56.1'	
							58	522		
			59.0				59	521		
							60		59.7	

8/22/2008 10:20 AM DTE - Fermi 3 Geotech

BLACK & VEATCH **BORING LOG**

BORING NO. RB-C7
SHEET 5 OF 19

CLIENT	PROJECT	PROJECT NO.
Detroit Edison	Fermi 3 COL Application	147483

PROJECT LOCATION	COORDINATES	GROUND ELEVATION (DATUM)	TOTAL DEPTH
Monroe, MI	N 6117.0' E 4450.0'	580.5 ft (NAVD 88)	272.0 (feet)

SURFACE CONDITIONS	COORDINATE SYSTEM	DATE START	DATE FINISHED
Level, gravel parking area	Plant	06/14/07	06/26/07

LOGGED BY	CHECKED BY	APPROVED BY
GTO for TTB for Grainger/Bonnie/Mass	EM for TB Dogbey/Bonnie	EM Meyer

SAMPLING							CORING									
SAMPLE TYPE	SAMPLE NUMBER	SET 6 INCHES	2ND 6 INCHES	3RD 6 INCHES	N VALUE	SAMPLE RECOVERY	CORE SIZE	RUN NUMBER	RUN LENGTH	RUN RECOVERY	RQD RECOVERY	PERCENT RECOVERY	RQD	DEPTH (FEET)	SAMPLE TYPE	ELEVATION (FEET)	GRAPHIC LOG	CLASSIFICATION OF MATERIALS	REMARKS
														60		520		DOLOMITE; argillaceous; light gray; micritic; fresh; strong; hard; w/stylolites; (Bass Islands Group). 0°,J,T,No,No,WA,R @ 59.7',60.1',60.7',61.1' black shale band @ 59.9-60.0', 60.9-60.95'	
HQ	9	5.0	4.9	4.2	98	84								61		519		61.5 DOLOMITE; argillaceous; gray; micritic; fresh; very strong; hard; thin bedded; w/argillaceous bands & stylolites; (Bass Islands Group). 90°,J,T,No,No,WA,R @ 62.2-63.5'	Core box #3 starts @ 61.5'.
														62		518			
														63		517		0°,J,T,No,No,WA,R @ 63.6'	
			64.0											64		516		fractured zone 90°,J,R @ 64.0-65.2'	
														65		515		bedding changes to 25° @ 65.3-67.5' 40°,J,VN,No,No,Pl,R @ 65.5'	
HQ	10	5.0	4.6	1.6	92	32								66		514			
														67		513		80°,J,T,No,No,St,VR @ 67.5-69.0'	
														68		512			
			69.0											69		511		80°,J,T,No,No,Pl,R @ 69.3-70.0', 71.3-72.6'	
														70		510		B,T,No,No,Pl @ 70.2', 70.5' 70°,J,T,No,No,Pl,R	
HQ	11	5.0	4.6	3.7	92	74								71		509			
														72		508			
														73		507			
			74.0											74		506			
														75					

8/22/2008 10:20 AM DTE - Fermi 3 Geotech

BLACK & VEATCH

BORING LOG

BORING NO. RB-C7

CLIENT	PROJECT	PROJECT NO.
Detroit Edison	Fermi 3 COL Application	147483

PROJECT LOCATION	COORDINATES	GROUND ELEVATION (DATUM)	TOTAL DEPTH
Monroe, MI	N 6117.0' E 4450.0'	580.5 ft (NAVD 88)	272.0 (feet)

SURFACE CONDITIONS	COORDINATE SYSTEM	DATE START	DATE FINISHED
Level, gravel parking area	Plant	06/14/07	06/26/07

LOGGED BY	CHECKED BY	APPROVED BY
Grainger/Bonnie/Mass (TB for ECO for)	Dogbey/Bonnie (TB for SM for)	Meyer (SM)

SAMPLING							CORING									
SAMPLE TYPE	SAMPLE NUMBER	SET 6 INCHES	2ND 6 INCHES	3RD 6 INCHES	N VALUE	SAMPLE RECOVERY	CORE SIZE	RUN NUMBER	RUN LENGTH	RUN RECOVERY	RQD RECOVERY	PERCENT RECOVERY	RQD	DEPTH (FEET)	SAMPLE TYPE	ELEVATION (FEET)	GRAPHIC LOG	CLASSIFICATION OF MATERIALS	REMARKS
														75		505			Partial drilling fluid return @ 75.0'. Core box #4 starts @ 75.5'.
																		75.5	
							HQ	12	5.0	5.0	2.4	100	48	76		504		BRECCIA; healed; (Bass Islands Group). B,MW,No,No,Ir (slightly weathered) @ 75.5', 78.5'	
																		76.8	
														77		503		DOLOMITE; argillaceous; gray; micritic; fresh; very strong; hard; thin bedded; w/argillaceous bands & stylolites; (Bass Islands Group).	
														78		502			No drilling fluid return @ 78.5'.
										79.0				79		501		0°,B,T,UK,Sp,PI @ 79.4',79.7',80.0'; white clay in fracture @ 80.0'	
														80		500		80°,J,T,No,No,Ir,VR @ 80.2-81.9'	
														81		499		0°,B,T,UK,Sp,PI @ 81.0'	
							HQ	13	5.0	4.9	1.8	98	36	82		498		0°,B,T,UK,Sp,PI @ 81.8'	
																		0°,B,T,UK,Sp,PI @ 82.3'	
														83		497		80°,J,T,No,No,Ir,VR @ 82.5' weathered, very dark gray shale band @ 82.7-82.9' 0°,B,T,UK,Sp,PI @ 83.1'	
										84.0				84		496		80°,J,T,No,No,Ir,VR @ 83.9' 0°,B,T,UK,Pa,PI @ 84.2'	
														85		495		anhydrite filled veins @ 84.8-85.2', 87.5-88.3' 0°,B,T,UK,Pa,PI @ 85.1' 0°,B,MW,No,No @ 85.5'; slightly weathered	
							HQ	14	5.0	5.0	4.5	100	90	86		494			
														87		493		55°,J,T,UK,Sp,PI @ 87.3' 0°,B,T,UK,Pa,PI @ 87.5'	
														88		492		0°,B,T,UK,Pa,PI @ 88.3',88.5'	
										89.0				89		491		80°,J,T,No,No,PI,R @ 89.3-90.5'	
																		89.5	
														90				DOLOMITE; crystalline; gray; micritic; very strong;	Core box #5

BLACK & VEATCH

BORING LOG

BORING NO. RB-C7

CLIENT	PROJECT	PROJECT NO.
Detroit Edison	Fermi 3 COL Application	147483

PROJECT LOCATION	COORDINATES	GROUND ELEVATION (DATUM)	TOTAL DEPTH
Monroe, MI	N 6117.0' E 4450.0'	580.5 ft (NAVD 88)	272.0 (feet)

SURFACE CONDITIONS	COORDINATE SYSTEM	DATE START	DATE FINISHED
Level, gravel parking area	Plant	06/14/07	06/26/07

LOGGED BY	CHECKED BY	APPROVED BY
Grainger/Bonnie/Mass (TB for)	Dogbey/Bonnie (TB)	Meyer (EM)

SAMPLE TYPE	SAMPLE NUMBER	SET 6 INCHES	2ND 6 INCHES	3RD 6 INCHES	N VALUE	SAMPLE RECOVERY	DEPTH (FEET)	ELEVATION (FEET)	CLASSIFICATION OF MATERIALS	REMARKS
							90		hard; massive; (Bass Islands Group).	starts @ 89.8'.
								490		
							91			
HQ	15	5.0	5.0	4.1	100	82		489	breccia @ 91.4-91.7'	
									91.5	
							92		DOLOMITE; argillaceous; gray; very fine grained; fresh; strong; hard; (Bass Islands Group). closely spaced stylolites @ 91.7-92.2' thin black shale seam @ 92.2' 80°,J,T,No,No,Pl,R @ 92.5-93.0'	Water level @ 16.5' prior to drilling on 06/20/07.
								488		
							93			
								487		
			94.0				94		0°,B,T,No,No,Pl,SR-R @ 94.0',94.3'	
								486		
							95		0°,B,T,No,No,Pl,SR-R @ 94.9'	
								485		
							96		0°,B,T,No,No,Pl,SR-R @ 95.7',96.0' 80°,J,T,No,No,Pl,R @ 95.7-96.3'	
									96.0	
HQ	16	5.0	4.9	2.4	98	48		484	DOLOMITE; crystalline; dark gray; micritic; fresh; very strong; hard; medium bedded w/stylolites; (Bass Islands Group). wavy bedding @ 96.0-97.0' 70°,J,VN,UK,Sp,Pl,R @ 97.0-97.3' 0°,B,T,No,No,Pl,SR-R @ 97.5',97.9'	
							97			
								483		
							98			
								482	90°,J,T,No,No,Pl,R @ 98.5' 0°,B,T,No,No,Pl,SR-R @ 98.5',98.7'	
			99.0				99		0°,B,T,No,No,Pl,SR-R @ 99.1',99.5'	
								481	80°,J,T,No,No,Pl,R @ 99.6-100.7'	
							100		0°,B,T,No,No,Pl,SR-R @ 100.0', 100.1'	
								480		
							101			
HQ	17	5.0	4.9	4.0	98	80		479	0°,B,T,No,No,Pl,SR-R @ 101.2',101.7'	
							102			
								478	0°,B,T,No,No,Pl,SR-R 102.6',102.9', 103.1'	
							103			
								477		
			104.0				104			Core box #6 starts @ 104.0'.
								476		
							105			

8/22/2008 10:20 AM DTE - Fermi 3 Geotech

BLACK & VEATCH

BORING LOG

BORING NO. RB-C7

CLIENT	PROJECT	PROJECT NO.
Detroit Edison	Fermi 3 COL Application	147483

PROJECT LOCATION	COORDINATES	GROUND ELEVATION (DATUM)	TOTAL DEPTH
Monroe, MI	N 6117.0' E 4450.0'	580.5 ft (NAVD 88)	272.0 (feet)

SURFACE CONDITIONS	COORDINATE SYSTEM	DATE START	DATE FINISHED
Level, gravel parking area	Plant	06/14/07	06/26/07

LOGGED BY Grainger/Bonnie/Mass | CHECKED BY Dogbey/Bonnie | APPROVED BY Meyer

SAMPLING: SAMPLE TYPE	SAMPLE NUMBER	SET 6 INCHES	2ND 6 INCHES	3RD 6 INCHES	N VALUE	SAMPLE RECOVERY	CORING: CORE SIZE	RUN NUMBER	RUN LENGTH	RUN RECOVERY	RQD RECOVERY	PERCENT RECOVERY	RQD	DEPTH (FEET)	SAMPLE TYPE	ELEVATION (FEET)	GRAPHIC LOG	CLASSIFICATION OF MATERIALS	REMARKS
														105		475		0-5°,B,N,UK,Sp,Pl @ 104.9',105.5'	
														106					
							HQ	18	5.0	4.8	3.1	96	62			474		B,MW,R (slightly weathered) @ 106.5',106.7'	
														107				70°,J,N,No,No,Pl,VR @ 106.8-107.5', 107.9-108.8'	
																473		B,N,UK,Sp,Pl @ 107.2'	
														108				108.0	
																472		DOLOMITE; dark grayish brown; crystalline; micritic; fresh; very strong; very hard; massive; w/stylolites & pits; (Bass Islands Group).	
										109.0				109				bedding broken & slightly weathered; clay present @ 108.8-109.2'	
																471		80°,J,T,No,No,Pl,R @ 109.2-110.2'	
														110		470			
														111					
							HQ	19	5.0	5.0	3.5	100	70			469			
														112				112.0	
																468		DOLOMITE; dark gray; crystalline; micritic; fresh; very strong; very hard; thick bedded; (Bass Islands Group).	
														113				B,VN,UK,Su,Pl @ 112.1', 112.8'	
																467		fractures in rock filled w/anhydrite @ 112.8-114.5'	
										114.0				114					
																466		B,T,No,No,Pl @ 114.6',115.0'	
														115				115.0	
																465		DOLOMITE; argillaceous; gray; very fine grained; fresh; very strong; hard; thin bedded w/thin shale seams; (Salina Group - Unit F).	
														116				B,T,No,No,Pl @ 115.3',115.6',115.8',116.4', soft clay seam @ 115.6'	
							HQ	20	5.0	4.8	2.3	96	46			464		B,T,No,No,Pl @ 116.7'	
														117				80°,J,T,No,No,Pl,R @ 117.0-117.2'	
																463		B,T,No,No,Pl @ 117.2'	
														118				B,T,No,No,Pl @ 117.7',118.0'	
																462			
										119.0				119					Core box #7 starts @ 119.0'.
																461		fractured; slightly weathered @ 119.5-122.0'	
														120					

BLACK & VEATCH

BORING LOG

BORING NO. RB-C7

CLIENT	PROJECT	PROJECT NO.
Detroit Edison	Fermi 3 COL Application	147483

PROJECT LOCATION	COORDINATES	GROUND ELEVATION (DATUM)	TOTAL DEPTH
Monroe, MI	N 6117.0' E 4450.0'	580.5 ft (NAVD 88)	272.0 (feet)

SURFACE CONDITIONS	COORDINATE SYSTEM	DATE START	DATE FINISHED
Level, gravel parking area	Plant	06/14/07	06/26/07

LOGGED BY	CHECKED BY	APPROVED BY
ECO for TB TB for Grainger/Bonnie/Mass	Dogbey/Bonnie	Meyer

SAMPLING							CORING										
SAMPLE TYPE	SAMPLE NUMBER	SET 6 INCHES	2ND 6 INCHES	3RD 6 INCHES	N VALUE	SAMPLE RECOVERY	CORE SIZE	RUN NUMBER	RUN LENGTH	RUN RECOVERY	RQD RECOVERY	PERCENT RECOVERY	RQD	DEPTH (FEET)	SAMPLE TYPE	ELEVATION (FEET)	GRAPHIC LOG	CLASSIFICATION OF MATERIALS	REMARKS
														120		460		bedding; weathered @ 120.2'	Core barrel trying to block off @ 119.0-122.0' core loss.
							HQ	21	5.0	3.6	0.7	72	14	121		459		70°,J,PI,R @ 121.5-122.0'	
														122		458		122.0 DOLOMITE; argillaceous; banded; fresh to slightly weathered; moderately strong; hard; w/veins & layers of anhydrite; (Salina Group - Unit F). bedding; weathered @ 122.8',123.4'	
														123		457		vein w/anhydrite crystals @ 123.5-124.0'	
										124.0				124		456		bedding; weathered @ 124.0',124.3'	Core barrel trying to block @ 124.5-126.9'.
							HQ	22	5.0	2.8	NR	56	NR	125		455		grading shaley w/depth @ 125.0'	
														126		454			
														127		453		127.0 DOLOMITE; shaley; gray; micritic; slightly weathered; w/thin layers of dolomite; crystalline; micritic; very strong; (Salina Group - Unit F).	
														128		452		127.8 CLAYSTONE; dolomitic; gray; blocky; slightly weathered; very weak; low hardness w/bands of dolomite; crystalline; very strong; fresh; very hard; (Salina Group - Unit F). 0°,J,PI,R @ 128.5', 129.5'	
										129.0				129		451			Core barrel trying to block off @ 129.0-134.5'.
							HQ	23	5.0	1.4	0.0	28	0	130		450			
														131		449			
														132		448			
														133		447			
										134.0				134		446			
														135					

8/22/2008 10:20 AM DTE - Fermi 3 Geotech

BLACK & VEATCH

BORING LOG

BORING NO. RB-C7

CLIENT	PROJECT	PROJECT NO.
Detroit Edison	Fermi 3 COL Application	147483

PROJECT LOCATION	COORDINATES	GROUND ELEVATION (DATUM)	TOTAL DEPTH
Monroe, MI	N 6117.0' E 4450.0'	580.5 ft (NAVD 88)	272.0 (feet)

SURFACE CONDITIONS	COORDINATE SYSTEM	DATE START	DATE FINISHED
Level, gravel parking area	Plant	06/14/07	06/26/07

LOGGED BY	CHECKED BY	APPROVED BY
Grainger/Bonnie/Mass	Dogbey/Bonnie	Meyer

SAMPLING							CORING									
SAMPLE TYPE	SAMPLE NUMBER	SET 6 INCHES	2ND 6 INCHES	3RD 6 INCHES	N VALUE	SAMPLE RECOVERY	CORE SIZE	RUN NUMBER	RUN LENGTH	RUN RECOVERY	RQD RECOVERY	PERCENT RECOVERY	RQD	DEPTH (FEET)	SAMPLE TYPE	ELEVATION (FEET)	GRAPHIC LOG	CLASSIFICATION OF MATERIALS	REMARKS
							HQ	24	2.5	1.4	0.0	56	0	135		445			Core barrel trying to block off @ 134.0-136.5'.
										136.5				136		444			
							HQ	25	2.5	0.5	0.0	20	0	137		443			
										139.0				138		442			
							HQ	26	2.5	0.0	0.0	0	0	139		441			Run HQ-26: Tried several times to recover core. Run HQ-27: Reduced run length to 3.0' to attempt recovery of HQ-26.
										141.5				140		440			
							HQ	27	3.0	0.7	0.0	23	0	141		439			
										144.5				142		438			
							HQ	28	2.5	2.1	1.1	84	44	143		437		grades moderately weathered; weak; moderately hard; medium bedding	
														144		436			
														145		435		—144.5— CLAY; very soft; white —145.2— CLAYSTONE; dolomitic; gray; blocky; moderately weathered; weak; moderately hard; medium bedded interbedded w/bands of dolomite; crystalline; micritic; very strong; fresh; very hard; (Salina Group - Unit F). 90°,J,T @ 146.0-147.0'	
														146		434			
										147.0				147		433			
							HQ	29	2.5	2.2	0.7	88	28	148		432			Core box #8 starts @ 147.9'.
														149		431			Following run HQ-29 tagged hole, depth 149.5'.
										149.5				150					

8/22/2008 10:20 AM DTE - Fermi 3 Geotech

BLACK & VEATCH

BORING LOG

BORING NO. RB-C7

CLIENT	PROJECT	PROJECT NO.
Detroit Edison	Fermi 3 COL Application	147483

PROJECT LOCATION	COORDINATES	GROUND ELEVATION (DATUM)	TOTAL DEPTH
Monroe, MI	N 6117.0' E 4450.0'	580.5 ft (NAVD 88)	272.0 (feet)

SURFACE CONDITIONS	COORDINATE SYSTEM	DATE START	DATE FINISHED
Level, gravel parking area	Plant	06/14/07	06/26/07

LOGGED BY	CHECKED BY	APPROVED BY
Grainger/Bonnie/Mass	Dogbey/Bonnie	Meyer

SAMPLING							CORING									
SAMPLE TYPE	SAMPLE NUMBER	SET 6 INCHES	2ND 6 INCHES	3RD 6 INCHES	N VALUE	SAMPLE RECOVERY	CORE SIZE	RUN NUMBER	RUN LENGTH	RUN RECOVERY	RQD RECOVERY	PERCENT RECOVERY	RQD	DEPTH (FEET)	SAMPLE TYPE	ELEVATION (FEET)	GRAPHIC LOG	CLASSIFICATION OF MATERIALS	REMARKS
														150		430			Water trying to block off @ 150.0-154.0'.
														151		429		151.0 — CLAY; soft; weathered	Hard and soft drilling @ 150.0-154.0'.
							HQ	30	5.0	2.2	0.0	44	0	152		428		152.0 — CLAYSTONE; dolomitic; gray; blocky; moderately weathered; weak; moderately hard; medium bedded; w/bands of dolomite; crystalline; micritic; very strong; fresh; very hard; (Salina Group - Unit F).	
														153		427			
														154		426			Water level @ 23.1' prior to drilling on 06/21/07.
										154.5				155		425		154.5 — CLAY; gray; very soft	
							HQ	31	2.5	1.0	0.0	40	0	156		424		155.5 — CLAYSTONE; dolomitic; gray; blocky; moderately weathered; weak; moderately hard; medium bedded; interbedded w/DOLOMITE; crystalline; micritic; very strong; fresh; very hard; (Salina Group - Unit F).	
										157.0				157		423			Hard and soft drilling @ 157.0-158.0'.
							HQ	32	2.5	2.4	1.0	96	40	158		422			
														159		421		159.5 — CLAY; very soft	
										159.5				160		420			Soft drilling.
							HQ	33	2.5	0.8	0.0	32	0	161		419		161.5 — CLAYSTONE; dolomitic; gray; blocky; moderately weathered; weak; moderately hard; medium bedded; interbedded w/DOLOMITE; crystalline; micritic; very strong; fresh; very hard; (Salina Group - Unit F).	
										162.0				162		418			
							HQ	34	2.5	0.7	0.0	28	0	163		417			
														164		416			
										164.5				165					

BLACK & VEATCH **BORING LOG**

CLIENT	PROJECT	PROJECT NO.
Detroit Edison	Fermi 3 COL Application	147483

PROJECT LOCATION	COORDINATES	GROUND ELEVATION (DATUM)	TOTAL DEPTH
Monroe, MI	N 6117.0' E 4450.0'	580.5 ft (NAVD 88)	272.0 (feet)

SURFACE CONDITIONS	COORDINATE SYSTEM	DATE START	DATE FINISHED
Level, gravel parking area	Plant	06/14/07	06/26/07

LOGGED BY	CHECKED BY	APPROVED BY
Grainger/Bonnie/Mass	Dogbey/Bonnie	Meyer

SAMPLING							CORING									
SAMPLE TYPE	SAMPLE NUMBER	SET 6 INCHES	2ND 6 INCHES	3RD 6 INCHES	N VALUE	SAMPLE RECOVERY	CORE SIZE	RUN NUMBER	RUN LENGTH	RUN RECOVERY	RQD RECOVERY	PERCENT RECOVERY	RQD	DEPTH (FEET)	SAMPLE TYPE	ELEVATION (FEET)	GRAPHIC LOG	CLASSIFICATION OF MATERIALS	REMARKS
														165		415			
							HQ	35	2.5	1.0	0.0	40	0	166		414			
										167.0				167		413			
							HQ	36	2.5	0.4	0.0	16	0	168		412			
										169.5				169		411		90°,J,T,No,No,Pl,R @ 169.4'	
							HQ	37	2.5	0.0	0.0	0	0	170		410		169.5 CLAYSTONE; dolomitic; gray; blocky; moderately weathered; weak; moderately hard; w/partings of dolomite; fresh; (Salina Group - Unit F).	
										172.0				171		409		170.8 BRECCIA; poorly indurated claystone matrix; dark gray; highly weathered; very weak; low hardness; w/ dolomite clasts; angular; dark grayish brown; micritic; slightly weathered; hard; (Salina Group - Unit F).	
							HQ	38	2.5	1.1	0.0	44	0	172		408			
										174.5				173		407			
							HQ	39	2.5	2.0	0.0	80	0	174		406			
										177.0				175		405			
							HQ	40	2.5	0.0	0.0	0	0	176		404			
										179.5				177		403			Core box #9 starts @ 177.0'.
														178		402			
														179		401			
														180					

BLACK & VEATCH

BORING LOG

BORING NO. RB-C7

CLIENT	PROJECT	PROJECT NO.
Detroit Edison	Fermi 3 COL Application	147483

PROJECT LOCATION	COORDINATES	GROUND ELEVATION (DATUM)	TOTAL DEPTH
Monroe, MI	N 6117.0' E 4450.0'	580.5 ft (NAVD 88)	272.0 (feet)

SURFACE CONDITIONS	COORDINATE SYSTEM	DATE START	DATE FINISHED
Level, gravel parking area	Plant	06/14/07	06/26/07

LOGGED BY	CHECKED BY	APPROVED BY
Grainger/Bonnie/Mass	Dogbey/Bonnie	Meyer

SAMPLING							CORING									
SAMPLE TYPE	SAMPLE NUMBER	SET 6 INCHES	2ND 6 INCHES	3RD 6 INCHES	N VALUE	SAMPLE RECOVERY	CORE SIZE	RUN NUMBER	RUN LENGTH	RUN RECOVERY	RQD RECOVERY	PERCENT RECOVERY	RQD	DEPTH (FEET)	ELEVATION (FEET)	GRAPHIC LOG	CLASSIFICATION OF MATERIALS	REMARKS
														180	400			
							HQ	41	2.5	0.9	0.0	36	0	181	399			
										182.0				182	398			
							HQ	42	2.5	1.5	0.0	60	0	183	397		0-5°,B,Cl,Pa,Pl,SR @ 183.5'	
														184			80°, J, No, No, Pl, SR @ 183.5, 183.6 intersected perpendicularly by 75°, J, No, No, Pl @ 183.6'	
										184.5					396		fractured @ 183.5-184.5	
							HQ	43	2.5	2.1	0.5	84	20	185	395		185.3 DOLOMITE; crystalline; micritic; slightly weathered; very strong; very hard; (Salina Group - Unit F).	
														186			grades weak @ 185.9'	
															394		186.5 BRECCIA; poorly indurated claystone matrix; dark gray; highly weathered; very weak; low hardness; w/ dolomite clasts; angular; dark grayish brown; micritic; slightly weathered; hard; (Salina Group - Unit F).	
										187.0				187	393			After run HQ-44: Hole depth 187.5'. Run HQ-45: Reduced to 2.5' to try to recover run HQ-44.
							HQ	44	2.5	0.0	0.0	0	0	188	392			
														189				
										189.5					391		189.5 LIMESTONE; gray; micritic; fresh; moderately hard; (Salina Group - Unit F).	
														190	390		189.9 BRECCIA; poorly indurated claystone matrix; dark gray; slighly weathered; very weak; low hardness; w/ limestone clasts; angular; gray; micritic; slightly weathered; hard; (Salina Group - Unit F).	
							HQ	45	2.5	2.4	0.4	96	16	191	389		90°,J,T,Cl,Pa,Pl,SR @ 190.7-191.5'	
																	191.0 LIMESTONE;80° gray; micritic; fresh; hard; interbedded w/DOLOMITE; light brownish gray; very fine grained; fresh; strong; hard; (Salina Group - Unit F).	
										192.0				192	388			
							HQ	46	2.5	1.7	0.0	68	0	193	387		stylolites @ 192.5-193.7'; very close @ 193.5-193.7'	
														194	386			
										194.5				195			vuggy limestone @ 194.5-195.1'	

8/22/2008 10:20 AM DTE - Fermi 3 Geotech

BLACK & VEATCH **BORING LOG**

BORING NO. RB-C7
SHEET 14 OF 19

CLIENT	PROJECT	PROJECT NO.
Detroit Edison	Fermi 3 COL Application	147483

PROJECT LOCATION	COORDINATES	GROUND ELEVATION (DATUM)	TOTAL DEPTH
Monroe, MI	N 6117.0' E 4450.0'	580.5 ft (NAVD 88)	272.0 (feet)

SURFACE CONDITIONS	COORDINATE SYSTEM	DATE START	DATE FINISHED
Level, gravel parking area	Plant	06/14/07	06/26/07

LOGGED BY Grainger/Bonnie/Mass TB TB for | CHECKED BY Dogbey/Bonnie TB | APPROVED BY Meyer

SAMPLING							CORING									
SAMPLE TYPE	SAMPLE NUMBER	SET 6 INCHES	2ND 6 INCHES	3RD 6 INCHES	N VALUE	SAMPLE RECOVERY	CORE SIZE	RUN NUMBER	RUN LENGTH	RUN RECOVERY	RQD RECOVERY	PERCENT RECOVERY	RQD	DEPTH (FEET)	ELEVATION (FEET)	GRAPHIC LOG	CLASSIFICATION OF MATERIALS	REMARKS
														195	385			
							HQ	47	2.5	1.7	0.6	68	24	196	384		0°,J,No,No,Pl,SR @ 196.0', 196.3', 196.8'	
														197	383			
										197.0							dolomite; gray; micritic; fresh; strong; moderately hard @ 197.2-197.7'	
							HQ	48	2.5	2.0	1.3	80	52	198	382		90°,J,Ca,Pa,Pl,SR @ 197.2-197.7'	
														199	381		199.0	
										199.5							BRECCIA; poorly indurated claystone matrix; dark gray; highly weathered; very weak; low hardness; w/ limestone clasts; angular; gray; micritic; fresh; strong; hard; (Salina Group - Unit F).	
							HQ	49	2.5	1.6	0.0	64	0	200	380			
														201	379			
										202.0				202	378		claystone; highly weathered; extremely weak; clay like @ 202.0-202.9'	Core box #10 starts @ 202.0'.
							HQ	50	2.5	2.5	1.0	100	40	203	377		203.6	
														204	376		LIMESTONE; vuggy; gray; micritic; fresh; very strong; hard; (Salina Group - Unit F). 95°,J,No,No,Pl,R @ 204.2-204.4'	
										204.5								Core loss @ 204.5-205.0'.
														205	375			
														206	374			
							HQ	51	5.0	4.3	2.0	86	40	207	373		90°,J,Ca,Fi,WA,SR @ 207.0-209.0'	
														208	372			
																	208.7	
														209	371		DOLOMITE; gray; micritic; fresh; very strong; hard; (Salina Group - Unit F). banded; light greenish gray @ 209.2-211.2' 70°,J,Ca,Pa,Pl,SR @ 209.5-209.7'	Core loss @ 208.6-208.8'.
										209.5				210				

8/22/2008 10:20 AM DTE - Fermi 3 Geotech

BORING LOG

CLIENT	PROJECT	PROJECT NO.
Detroit Edison	Fermi 3 COL Application	147483

PROJECT LOCATION	COORDINATES	GROUND ELEVATION (DATUM)	TOTAL DEPTH
Monroe, MI	N 6117.0' E 4450.0'	580.5 ft (NAVD 88)	272.0 (feet)

SURFACE CONDITIONS	COORDINATE SYSTEM	DATE START	DATE FINISHED
Level, gravel parking area	Plant	06/14/07	06/26/07

LOGGED BY	CHECKED BY	APPROVED BY
TB for TB for Grainger/Bonnie/Mass	TB for Dogbey/Bonnie	Meyer

SAMPLING							CORING								
SAMPLE TYPE	SAMPLE NUMBER	SET 6 INCHES	2ND 6 INCHES	3RD 6 INCHES	N VALUE	SAMPLE RECOVERY	CORE SIZE	RUN NUMBER	RUN LENGTH	RUN RECOVERY	RQD RECOVERY	PERCENT RECOVERY	RQD	DEPTH (FEET)	ELEVATION (FEET)	CLASSIFICATION OF MATERIALS	REMARKS
							HQ	52	5.0	4.8	2.8	96	56	210	370	40°,J,Ca,Fi,Pl,SR @ 209.8'	
														211	369	limestone band; vuggy; medium dark gray; micritic; slightly weathered; strong; moderately hard @ 211.2-211.4'	
														212	368	0°,J,Ca,Fi,Pl,SR @ 211.5', 211.7', 211.8' 70°,J,Ca,Fi,Pl,SR @ 211.5-211.9' 30°,J,Ca,Fi,Pl,SR @ 212.2-212.4'	
														213	367	stylolites increase @ 213.0-214.0'	
														214	366	50°,J,Ca,Fi,Pl,SR @ 214.0' 40°,J,Ca,Pa,Pl,SR @ 214.0'	
										214.5				215	365	brecciated band; light brownish gray dolomite @ 215.0-215.1'	
																215.2 LIMESTONE; vuggy; light gray; slightly weathered; strong; hard; (Salina Group - Unit F).	
							HQ	53	5.0	3.2	1.2	64	24	216	364	brecciated @ ~216.5'	
														217	363		
														218	362		
														219	361	219.0 DOLOMITE; gray; micritic; fresh; strong; hard; w/ ostracodes; (Salina Group - Unit F). 90°,J,Ca,Pa,Pl,SR @ 219.1-219.5' 75°,J,Ca,Fi,Pl,SR @ 219.1-219.5'	Core box #11 starts @ 219.5'.
										219.5				220	360	219.5 LIMESTONE; gray; micritic; slightly weathered; strong; hard; (Salina Group - Unit F).	
							HQ	54	4.0	1.8	0.9	45	22.5	221	359		
														222	358	222.5 DOLOMITE; light brownish gray; micritic; fresh; strong; hard; (Salina Group - Unit F). 50°,J,Ca,Fi,Pl,SR @ 222.5', 223.1' closely spaced stylolites @ 223.1-223.4' 60°,J,Ca,Pa,Pl,SR @ 223.5' 90°,J,Ca,Pa,Pl,SR @ 223.5-223.7'	
										223.5				223	357		Core barrel blocked @ 223.5'. Core grinding @ 223.5-225.5'.
							HQ	55	1.0	0.2	0.0	20	0	224	356		
										224.5				225			

BLACK & VEATCH **BORING LOG**

BORING NO. RB-C7
SHEET 16 OF 19

CLIENT	PROJECT	PROJECT NO.
Detroit Edison	Fermi 3 COL Application	147483

PROJECT LOCATION	COORDINATES	GROUND ELEVATION (DATUM)	TOTAL DEPTH
Monroe, MI	N 6117.0' E 4450.0'	580.5 ft (NAVD 88)	272.0 (feet)

SURFACE CONDITIONS	COORDINATE SYSTEM	DATE START	DATE FINISHED
Level, gravel parking area	Plant	06/14/07	06/26/07

LOGGED BY Grainger/Bonnie/Mass TB TB for | CHECKED BY Dogbey/Bonnie TB | APPROVED BY Meyer

SAMPLING							CORING									
SAMPLE TYPE	SAMPLE NUMBER	SET 6 INCHES	2ND 6 INCHES	3RD 6 INCHES	N VALUE	SAMPLE RECOVERY	CORE SIZE	RUN NUMBER	RUN LENGTH	RUN RECOVERY	RQD RECOVERY	PERCENT RECOVERY	RQD	DEPTH (FEET)	SAMPLE TYPE	ELEVATION (FEET)	GRAPHIC LOG	CLASSIFICATION OF MATERIALS	REMARKS
														225		355			
																		225.5 — CLAYSTONE; gray; highly weathered; extremely weak; low hardness; w/angular dolomite fragments; gray or pale yellowish brown; micritic; slightly weathered; strong; moderately hard; (Salina Group - Unit F).	Soft drilling @ 225.5-229.0'.
														226		354			
							HQ	56	5.0	1.4	0.0	28	0	227		353			
														228		352			
														229				229.0 — DOLOMITE; argillaceous; dark gray; micritic; slightly weathered; strong; hard; w/limey partings; (Salina Group - Unit F).	
										229.5						351		229.5 — CLAYSTONE; dark gray; highly weathered; extremely weak; low hardness (Salina Group - Unit F)	Core barrel blocking off @ 229.5'.
														230		350			
							HQ	57	2.5	0.4	0.0	16	0	231		349			
										232.0				232				232.0 — DOLOMITE; argillaceous; dark gray; micritic; slightly weathered; strong; hard; w/limey partings; (Salina Group - Unit F). 60°,J,Cl,Pa,Pl,SR @ 233.0'	
																348			
							HQ	58	2.5	0.9	0.0	36	0	233		347			
														234					
										234.5						346		234.3 — BRECCIA; poorly indurated claystone matrix; gray; highly weathered; extremely weak; low hardness; w/ angular argillaceous dolomite fragments; (Salina Group - Unit F).	Water level @ 23.7' prior to drilling on 06/26/07.
														235		345			Core loss @ 234.5-236.6'.
							HQ	59	2.5	1.0	0.0	40	0	236		344		gray dolomite; moderately hard @ 236.6-236.9' 30°,J,Cl,Fi,Pl,SR @ 236.7'	
										237.0				237				237.0 — DOLOMITE; light brownish gray; micritic; fresh; very strong; hard; w/fossils; (Salina Group - Unit E). angular fragments @ 237.0-237.9' 90°,J,No,No,Pl,SR @ 237.7-240.0' claystone band 0.1' thick; medium light gray; highly weathered; extremely weak; low hardness @ 237.9' 0°,J,No,No,Pl,SR @ 238.3'	Core loss @ 237.0-237.2' along stylolites.
																343			
							HQ	60	2.5	2.3	0.8	92	32	238		342			
														239					
										239.5						341		vuggy; moderately hard dolomite (vugs from dissolved fossils) @ 239.5'	
														240					

8/22/2008 10:20 AM DTE - Fermi 3 Geotech

BLACK & VEATCH **BORING LOG**

BORING NO. RB-C7
SHEET 17 OF 19

CLIENT	PROJECT	PROJECT NO.
Detroit Edison	Fermi 3 COL Application	147483

PROJECT LOCATION	COORDINATES	GROUND ELEVATION (DATUM)	TOTAL DEPTH
Monroe, MI	N 6117.0' E 4450.0'	580.5 ft (NAVD 88)	272.0 (feet)

SURFACE CONDITIONS	COORDINATE SYSTEM	DATE START	DATE FINISHED
Level, gravel parking area	Plant	06/14/07	06/26/07

LOGGED BY	CHECKED BY	APPROVED BY
Grainger/Bonnie/Mass	Dogbey/Bonnie	Meyer

SAMPLING							CORING										
SAMPLE TYPE	SAMPLE NUMBER	SET 6 INCHES	2ND 6 INCHES	3RD 6 INCHES	N VALUE	SAMPLE RECOVERY	CORE SIZE	RUN NUMBER	RUN LENGTH	RUN RECOVERY	RQD RECOVERY	PERCENT RECOVERY	RQD	DEPTH (FEET)	SAMPLE TYPE	ELEVATION (FEET)	GRAPHIC LOG	CLASSIFICATION OF MATERIALS	REMARKS
														240					
																340			
														241				40°,J,No,No,Pl,SR @ 241.1-241.2'	
																339		60°,J,No,No,Pl,SR @ 241.1-241.2'	
																		10°,J,No,No,Pl,SR @ 241.1-241.2'	
							HQ	61	5.0	4.6	3.7	92	74	242				80°,J,T,UK,Fi,Pl @ 241.2-241.6'	
																338			
														243					
																337		0°,J,Cl,Fi,Pl,SR @ 243.5'	
														244				0°,J,No,No,Pl,SR @ 243.8', 244.2'	
										244.5						336			
														245					
																335		anhydrite; amorphous; aphanitic; fresh; very weak; low hardness; parting @ 245.4', 245.9'	
														246					
																334		0°,J,No,No,Pl,SR @ 246.3' (fossil bed), 247.7'	
							HQ	62	5.0	5.0	4.5	100	90	247				50°,J,No,No,Pl,SR @ 246.7-247.0', 247.5'	
																333		claystone band; very light gray; highly weathered; extremely weak; low hardness; @ 247.5-247.7'	Core box #12 starts @ 247.6'.
														248				brecciated; closely spaced stylolites; fossil beds; @ 248.0-248.2'	
																332			
														249					
										249.5						331			
														250					
																330			
														251					
																329			
							HQ	63	5.0	4.4	3.5	88	70	252					
																328		0°,J,Ca,Pa,Pl,SR @ 252.4'	Core loss @ 252.4-252.6'.
														253				30°,J,Ca,Pa,Pl,SR @ 252.4'	
																327		90°,J,Ca,Pa,Pl,SR @ 252.6-252.9'	
														254				gypsum; amorphous; micritic; fresh; very weak; low hardness; parting or band @ 252.9', 253.2-253.4', 253.5-253.7'	
																253.7			
										254.5						326		DOLOMITE; argillaceous; gray; fissile; platy; micritic to very fine grained; fresh; strong; hard; w/closely spaced anhydrite & gypsum partings, beds, & lenses;	
														255					

8/22/2008 10:20 AM DTE - Fermi 3 Geotech

BLACK & VEATCH

BORING LOG

BORING NO. RB-C7

CLIENT	PROJECT	PROJECT NO.
Detroit Edison	Fermi 3 COL Application	147483

PROJECT LOCATION	COORDINATES	GROUND ELEVATION (DATUM)	TOTAL DEPTH
Monroe, MI	N 6117.0' E 4450.0'	580.5 ft (NAVD 88)	272.0 (feet)

SURFACE CONDITIONS	COORDINATE SYSTEM	DATE START	DATE FINISHED
Level, gravel parking area	Plant	06/14/07	06/26/07

LOGGED BY	CHECKED BY	APPROVED BY
Granger/Bonnie/Mass	Dogbey/Bonnie	Meyer

SAMPLING							CORING									
SAMPLE TYPE	SAMPLE NUMBER	SET 6 INCHES	2ND 6 INCHES	3RD 6 INCHES	N VALUE	SAMPLE RECOVERY	CORE SIZE	RUN NUMBER	RUN LENGTH	RUN RECOVERY	RQD RECOVERY	PERCENT RECOVERY	RQD	DEPTH (FEET)	ELEVATION (FEET)	GRAPHIC LOG	CLASSIFICATION OF MATERIALS	REMARKS
														255	325		amorphous; white; few gray; fresh; weak; moderately hard; largest bed 0.4' thick; beds w/convoluted boundaries; (Salina Group - Unit E).	
														256	324			
							HQ	64	5.0	5.0	4.7	100	94	257	323		angular fragments @ 257.2-259.3' 0°,J,Cl,Fi,Pl,S @ 257.2-257.3'	
														258	322			
														259	321		gypsum bed @ 258.9-259.1'	
										259.5				260	320			
														261	319			
							HQ	65	5.0	5.0	4.7	100	94	262	318		claystone band; light gray; highly weathered; extremely weak; low hardness @ 261.8-261.9' grades w/no anhydrite & gypsum beds/partings/ lenses @ 261.9 0°,J,Gy,Fi,Pl,SR @ 262.8-263.8'	Core box #13 starts @ 262.0'.
														263	317			
														264	316		grades w/anhydrite & gypsum beds/partings/lenses @ 264.0' 0°,J,Cl,Pa,Pl,SR @ 264.0'	
										264.5				265	315			
														266	314		0°,J,Gy,Fi,Pl,S @ 265.8' 90°,J,No,No,Pl,S @ 265.8-265.9'	
							HQ	66	5.0	5.0	4.7	100	94	267	313		267.3 GYPSUM/ANHYDRITE; bands & thin beds; white; amorphous; micritic; fresh; weak, hard; convoluted boundaries; soft sediment deformation; (Salina Group - Unit E).	
														268	312		268.7	
														269	311		DOLOMITE; argillaceous; gray; fissile; platy; micritic to very fine grained; fresh; strong; hard; w/moderately wide gypsum partings; amorphous; white; few gray; fresh; weak; (Salina Group - Unit E).	
										269.5				270				

BLACK & VEATCH

BORING LOG

BORING NO. RB-C7

CLIENT	PROJECT	PROJECT NO.
Detroit Edison	Fermi 3 COL Application	147483

PROJECT LOCATION	COORDINATES	GROUND ELEVATION (DATUM)	TOTAL DEPTH
Monroe, MI	N 6117.0' E 4450.0'	580.5 ft (NAVD 88)	272.0 (feet)

SURFACE CONDITIONS	COORDINATE SYSTEM	DATE START	DATE FINISHED
Level, gravel parking area	Plant	06/14/07	06/26/07

LOGGED BY	CHECKED BY	APPROVED BY
Grainger/Bonnie/Mass	Dogbey/Bonnie	Meyer

SAMPLING							CORING									
SAMPLE TYPE	SAMPLE NUMBER	SET 6 INCHES	2ND 6 INCHES	3RD 6 INCHES	N VALUE	SAMPLE RECOVERY	CORE SIZE	RUN NUMBER	RUN LENGTH	RUN RECOVERY	RQD RECOVERY	PERCENT RECOVERY	RQD	DEPTH (FEET)	SAMPLE TYPE	ELEVATION (FEET)	GRAPHIC LOG	CLASSIFICATION OF MATERIALS	REMARKS
														270		310		fossil beds @ 269.5'	
																		269.8	
							HQ	67	2.5	2.5	2.5	100	100	271		309		DOLOMITE; dark reddish brown; micritic; fresh; very strong; hard; w/thin shale partings; gray; fresh; strong; moderately hard; convoluted boundaries; wide to close spacing; (Salina Group - Unit E).	
														272		308			Bottom of boring @ 272.0'. Water level @ 18.4' @ completion of drilling. Backfilled w/ bentonite chips on 09/09/07.
														273		307			
														274		306			
														275		305			
														276		304			
														277		303			
														278		302			
														279		301			
														280		300			
														281		299			
														282		298			
														283		297			
														284		296			
														285					

8/22/2008 10:20 AM DTE - Fermi 3 Geotech

BLACK & VEATCH

BORING LOG

BORING NO. RB-C8

SHEET 1 OF 32

CLIENT	PROJECT	PROJECT NO.
Detroit Edison	Fermi 3 COL Application	147483

PROJECT LOCATION	COORDINATES	GROUND ELEVATION (DATUM)	TOTAL DEPTH
Monroe, MI	N 6110.9' E 4534.4'	580.4 ft (NAVD 88)	471.5 (feet)

SURFACE CONDITIONS	COORDINATE SYSTEM	DATE START	DATE FINISHED
Gravel parking lot near field	Plant	06/13/07	06/28/07

LOGGED BY	CHECKED BY	APPROVED BY
GCO Ohlmacher	GCO Dogbey/Ohlmacher	EM Meyer

SAMPLING							CORING									
SAMPLE TYPE	SAMPLE NUMBER	SET 6 INCHES	2ND 6 INCHES	3RD 6 INCHES	N VALUE	SAMPLE RECOVERY	CORE SIZE	RUN NUMBER	RUN LENGTH	RUN RECOVERY	RQD RECOVERY	PERCENT RECOVERY	RQD	DEPTH (FEET)	SAMPLE TYPE	ELEVATION (FEET)	GRAPHIC LOG	CLASSIFICATION OF MATERIALS	REMARKS
														0		580		Poorly graded COBBLES with Gravel - About 60% angular to subangular, hard cobbles w/max size 4"; about 30% fine to coarse, angular to subangular, hard gravel w/max. size 3"; about 5% fine to coarse, angular to subangular, hard sand; about 5% fines; dark reddish gray; dry; weak reaction w/HCl; homogeneous; (Fill).	Boring advanced w/vacuum excavation.
														1		579			
														2		578		0.7	
														3		577		Well-graded COBBLES - About 80% angular to subangular, hard cobbles, w/max size 8"; about 10% angular to subangular gravel w/max size 3"; about 5% sand; about 5% fines; dark reddish gray; dry; weak reaction w/HCl; homogeneous; (Fill).	
S	1		4.0			0.7								4		576			Below 4.0' continued w/4" ID sonic continuous sampler w/ nominal 6" temporary steel casing advanced w/sampler.
														5		575		5.0 Well graded GRAVEL (GW) - About 60% fine to coarse, angular to subangular gravel; fractured w/2 hammer blows; about 15% angular to subangular cobbles; about 10% fine to coarse, angular to subangular sand; trace fines; light gray; weak; moist; strong reaction w/HCl; homogeneous; no cementation; (Fill).	
														6		574			
														7		573			
S	2		5.0			1.9								8		572			
														9		571			
														10		570			
														11		569			
			10.0											12		568			
S	3					2.8								13		567		13.5 Fat CLAY with sand (CH) - About 80% high plasticity, high toughness, slow dilatancy fines; about 20% fine to coarse, angular to subrounded sand; trace gravel; strong brown to gray; soft; moist; strong reaction w/ HCl; homogeneous; (Lacustrine Deposit).	
														14		566			
														15					

BLACK & VEATCH

BORING LOG

BORING NO. RB-C8

CLIENT	PROJECT	PROJECT NO.
Detroit Edison	Fermi 3 COL Application	147483

PROJECT LOCATION	COORDINATES	GROUND ELEVATION (DATUM)	TOTAL DEPTH
Monroe, MI	N 6110.9' E 4534.4'	580.4 ft (NAVD 88)	471.5 (feet)

SURFACE CONDITIONS	COORDINATE SYSTEM	DATE START	DATE FINISHED
Gravel parking lot near field	Plant	06/13/07	06/28/07

LOGGED BY	CHECKED BY	APPROVED BY
GCO Ohlmacher	EMD GCO Dogbey/Ohlmacher	Meyer EM

SAMPLING							CORING										
SAMPLE TYPE	SAMPLE NUMBER	SET 6 INCHES	2ND 6 INCHES	3RD 6 INCHES	N VALUE	SAMPLE RECOVERY	CORE SIZE	RUN NUMBER	RUN LENGTH	RUN RECOVERY	RQD RECOVERY	PERCENT RECOVERY	RQD	DEPTH (FEET)	SAMPLE TYPE	ELEVATION (FEET)	GRAPHIC LOG

CLASSIFICATION OF MATERIALS	REMARKS
	PP = 1.1 TSF
16.5 Lean CLAY with Sand (CL) - About 75% medium plasticity, medium toughness, no dilatancy fines; about 20% fine to coarse, rounded to subangular sand; about 5% fine, rounded to subangular gravel; brown; hard; moist; strong reaction w/HCl; homogeneous; (Glacial Till).	PP = 2.3 TSF
20.2 Lean CLAY with Sand (CL) - About 80% medium plasticity, medium toughness, no dilatancy fines; about 20% fine to coarse, subangular to rounded sand, fractured w/1 hammer blow; dark gray; hard; moist; strong reaction w/HCl; homogeneous; (Glacial Till).	PP = 3.3 TSF
	PP > 4.5 TSF
26.0 DOLOMITE; gray; crystalline; micritic; slightly weathered; strong; moderately hard; (Bass Islands Group).	Set nominal 6" temporary steel casing to 29.5'. Below 29.5' continued w/triple tube wire line core barrel w/ diamond bit using water as drilling fluid.
	Core box #1 starts @ 29.5'.

SAMPLE TYPE	SAMPLE NUMBER	SET 6 INCHES	2ND 6 INCHES	3RD 6 INCHES	N VALUE	SAMPLE RECOVERY	CORE SIZE	RUN NUMBER	RUN LENGTH	RUN RECOVERY	RQD RECOVERY	PERCENT RECOVERY	RQD	DEPTH (FEET)	SAMPLE TYPE	ELEVATION (FEET)	GRAPHIC LOG
										15.0				15		565	
														16		564	
S	4					5.0								17		563	
														18		562	
														19		561	
										20.0				20		560	
S	5					5.0								21		559	
														22		558	
														23		557	
														24		556	
										25.0				25		555	
														26		554	
S	6					NR								27		553	
														28		552	
														29		551	
										29.5				30			

BORING LOG

CLIENT	PROJECT	PROJECT NO.
Detroit Edison	Fermi 3 COL Application	147483

PROJECT LOCATION	COORDINATES	GROUND ELEVATION (DATUM)	TOTAL DEPTH
Monroe, MI	N 6110.9' E 4534.4'	580.4 ft (NAVD 88)	471.5 (feet)

SURFACE CONDITIONS	COORDINATE SYSTEM	DATE START	DATE FINISHED
Gravel parking lot near field	Plant	06/13/07	06/28/07

LOGGED BY	CHECKED BY	APPROVED BY
Ohlmacher GCO	Dogbey/Ohlmacher GCO	Meyer EM

SAMPLING							CORING									
SAMPLE TYPE	SAMPLE NUMBER	SET 6 INCHES	2ND 6 INCHES	3RD 6 INCHES	N VALUE	SAMPLE RECOVERY	CORE SIZE	RUN NUMBER	RUN LENGTH	RUN RECOVERY	RQD RECOVERY	PERCENT RECOVERY	RQD	DEPTH (FEET)	SAMPLE TYPE	ELEVATION (FEET)	GRAPHIC LOG	CLASSIFICATION OF MATERIALS	REMARKS
PQ	1								2.2	1.4	0.9	64	41	30		550		90°,J,T,No,No,Pl,SR @ 30.2-30.5',30.5-31.1',31.1-31.3', 31.8-32.1' 0°,J,VN,No,No,Pl,SR @ 30.5',30.6',30.8'	
														31		549			
										31.7				32		548		grades shale partings (0.05' spacing), some horizontal stylolites @ 32.0' 0°,J,VN,No,No,Pl,SR @ 32.6',33.0',33.2',33.7',33.9' 90°,J,T,No,No,Pl,SR @ 32.7-34.0'	
														33		547			
PQ	2								5.0	5.0	4.4	100	88	34		546		90°,J,T,No,No,Pl,SR @ 34.1-36.6' 0°,J,VN,No,No,Pl,SR @ 34.4',34.7',35.2'	
														35		545		grades no shale partings @ 35.5'	
														36		544		65°,J,T,No,No,Pl,SR @ 36.4-36.7' 30°,J,VN,No,No,Pl,SR @ 36.4-36.6'	
										36.7				37		543		highly fractured @ 36.7-38.0' 90°,J,T,No,No,Pl,SR @ 36.9-37.8'	
														38		542		90°,J,T,No,No,Pl,SR @ 38.0-38.3' 0°,J,VN,No,No,Pl,SR @ 38.1',38.5,'38.8' black shale parting @ 38.1'	
PQ	3								5.0	5.0	1.8	100	36	39		541		90°,J,T,No,No,Pl,SR @ 38.5-39.3' black shale band @ 38.6' 10°,J,T,No,No,Pl,S @ 39.2' 0°,J,VN,No,No,Pl,SR @ 39.1', 70°,J,VN,No,No,Pl,R @ 39.6-40.2'	Core box #2 starts @ 39.7'.
														40		540		highly fractured @ 40.2-40.5' 0°,J,VN,No,No,Pl,SR @ 40.5',40.7',40.8',41.0' grades 15% vugs @ 40.5' grades mottled gray & dark gray, no vugs @ 40.7' black shale parting @ 41.0'	No drilling fluid return @ 40.5'
														41		539			
										41.7				42		538		0°,J,VN,No,No,Pl,SR @ 41.9',42.3'	
														43		537		30°,J,VN,No,No,Pl,S @ 42.5-42.6' highly fractured @ 42.6-42.7', 42.8-43.4' 90°,J,T,No,No,Pl,SR @ 42.7-43.3'	
PQ	4								5.0	5.0	1.7	100	34	44		536		43.3 DOLOMITE, vuggy; dark gray; slightly weathered; strong; moderately hard; 15% vugs; some calcite in vugs; banded; (Bass Islands Group). 0°,J,VN,No,No,Pl,SR @ 43.4' 0°,J,VN,No,No,Pl,SR @ 43.6',44.3',44.6'	
														45					

BLACK & VEATCH

BORING LOG

BORING NO. RB-C8

CLIENT	PROJECT	PROJECT NO.
Detroit Edison	Fermi 3 COL Application	147483

PROJECT LOCATION	COORDINATES	GROUND ELEVATION (DATUM)	TOTAL DEPTH
Monroe, MI	N 6110.9' E 4534.4'	580.4 ft (NAVD 88)	471.5 (feet)

SURFACE CONDITIONS	COORDINATE SYSTEM	DATE START	DATE FINISHED
Gravel parking lot near field	Plant	06/13/07	06/28/07

LOGGED BY	CHECKED BY	APPROVED BY
Ohlmacher GCO	Dogbey/Ohlmacher GCO	Meyer EM

SAMPLING: SAMPLE TYPE	SAMPLE NUMBER	SET 6 INCHES	2ND 6 INCHES	3RD 6 INCHES	N VALUE	SAMPLE RECOVERY	CORING: CORE SIZE	RUN NUMBER	RUN LENGTH	RUN RECOVERY	RQD RECOVERY	PERCENT RECOVERY	RQD	DEPTH (FEET)	SAMPLE TYPE	ELEVATION (FEET)	GRAPHIC LOG	CLASSIFICATION OF MATERIALS	REMARKS
														45		535		highly fractured; partially cemented @ 44.8-45.5'	
														46		534		5°,J,VN,Cl,Pa,Pl,SR @ 45.7', 46.0' 75°,J,T,No,No,Pl,SR @ 45.7-46.0'	
										46.7				47		533		breccia zone, cemented @ 46.5-46.8' calcite vein (0.05' thick) @ 46.5' grades gray, no vugs @ 46.8' highly fractured @ 46.9-47.0' grades 20% vugs @ 47.3' 14°,J,VN,No,No,WA,SR @ 47.5', 48.2'	
														48		532		90°,J,T,No,No,Pl,SR @ 48.2-49.2',50.4-50.9' (48.2) DOLOMITE; gray; slightly weathered; strong;	
PQ	5	5.0	4.8	4.2	96	84								49		531		moderately hard; banded; (Bass Islands Group). highly fractured @ 48.4-48.5' 30°,J,T,No,No,Pl,SR @ 48.9-49.2'	Core box #3 starts @ 48.7'. Vibrations in drill stem @ 49.0'.
														50		530		0°,J,VN,No,No,Pl,SR @ 49.8',50.2',50.9'	
														51		529		90°,J,T,No,No,Pl,SR @ 51.4-51.7'	
										51.7				52		528		65°,J,T,No,No,Pl,SR @ 52.3-52.6',52.8-53.3'	Water level @ 8.4' prior to drilling on 06/15/07.
														53		527		25°,J,T,No,No,Pl,SR @ 52.5' 90°,J,T,No,No,Pl,SR @ 52.9-54.0'	
PQ	6	4.7	4.7	2.5	100	53								54		526		40°,J,T,No,No,Pl,SR @ 54.1-54.3' 20°,J,T,No,No,Pl,SR @ 54.3'	
														55		525		0°,J,VN,No,No,Pl,SR @ 54.4',54.6' (54.4) 90°,J,T,No,No,Pl,SR @ 54.4-54.7' DOLOMITE; argillaceous; dark gray; micritic; fresh; weak; low hardness; bedding <¼"; (Bass Islands Group).	Loosing drilling fluid @ 55.5'.
														56		524		(54.6) DOLOMITE; mottled dark gray & gray; micritic; strong; moderately hard; (Bass Islands Group).	
										56.4				57		523		(54.8) DOLOMITE; oolitic; brownish gray; very fine grained; strong; moderately hard; banded; (Bass Islands Group).	
														58		522		0°,J,VN,No,No,Pl,SR @ 54.9',57.7',57.8' 90°,J,T,No,No,Pl,SR @ 54.9-55.2',55.4-55.6',55.6-56.4',56.4-56.9' 80°,J,VN,No,No,Pl,SR @ 57.0-58.0'	Core box #4 starts @ 57.8'.
PQ	7	5.3	5.2	3.1	98	58								59		521		(58.4) DOLOMITE; brecciated; indurated; gray; very fine grained; fresh; strong; moderately hard; banded; (Bass Islands Group).	
														60					

BLACK & VEATCH

BORING LOG

BORING NO. RB-C8
SHEET 5 OF 32

CLIENT	PROJECT	PROJECT NO.
Detroit Edison	Fermi 3 COL Application	147483

PROJECT LOCATION	COORDINATES	GROUND ELEVATION (DATUM)	TOTAL DEPTH
Monroe, MI	N 6110.9' E 4534.4'	580.4 ft (NAVD 88)	471.5 (feet)

SURFACE CONDITIONS	COORDINATE SYSTEM	DATE START	DATE FINISHED
Gravel parking lot near field	Plant	06/13/07	06/28/07

LOGGED BY	CHECKED BY	APPROVED BY
Ohlmacher GCO	Dogbey/Ohlmacher GCO	Meyer EM

SAMPLING							CORING									
SAMPLE TYPE	SAMPLE NUMBER	SET 6 INCHES	2ND 6 INCHES	3RD 6 INCHES	N VALUE	SAMPLE RECOVERY	CORE SIZE	RUN NUMBER	RUN LENGTH	RUN RECOVERY	RQD RECOVERY	PERCENT RECOVERY	RQD	DEPTH (FEET)	SAMPLE TYPE	ELEVATION (FEET)	GRAPHIC LOG	CLASSIFICATION OF MATERIALS	REMARKS
														60		520		0°,J,VN,Cl,Pa,WA,R @ 58.5',58.6' black clay band @ 58.6-58.7' highly fractured @ 58.7-58.4' grades no breccia, banded @ 58.9' 90°,J,T,No,No,Pl,SR @ 58.9-59.8' 0°,J,VN,No,No,Pl,SR @ 59.0',59.6',59.9' 65°,J,T,No,No,Pl,SR @ 59.9-60.2' grades breccia indurated w/angular to subrounded fragments @ 60.0' 0°,J,T,No,No,Pl,SR @ 60.2',61.0',61.1',62.0',62.5',63.6' grades no breccia @ 60.4' 0°,J,N,Cl,Fi,Pl,R @ 60.6' grades breccia indurated @ 60.8'	
														61		519			
			61.7											62		518			
														63		517			
																		61.0 DOLOMITE; gray; very fine grained; fresh; strong; moderately hard; banded; (Bass Islands Group). 90°,J,T,No,No,Pl,SR @ 61.1-61.7'(2), 61.7-63.5' highly fractured @ 62.9-63.5' 90°,J,T,No,No,Pl,SR @ 63.5-66.7', highly fractured @ 63.9-64.7' 0°,J,T,No,No,Pl,SR @ 65.1',65.2' highly fractured zone @ 65.4-66.7'	
PQ	8	5.0	5.0	0.5	100	10								64		516			
														65		515			
														66		514			
			66.7											67		513		0°,J,T,No,No,Pl,SR @ 67.0',67.8',68.0',68.1' 10°,J,T,No,No,Pl,SR @ 67.4'	Core box #5 starts @ 66.7'
														68		512		grades 5% vugs @ 67.8' 70°,J,T,No,No,Pl,SR @ 67.8-68.4' 0°,J,T,No,No,Pl,SR @ 68.5',68.6',68.7'	
PQ	9	5.0	5.0	3.8	100	76								69		511		0°,J,T,No,No,Pl,SR @ 69.3',70.3'	
														70		510		90°,J,T,No,No,Pl,SR @ 70.4-70.8' 0°,J,T,No,No,Pl,SR @ 70.6',70.9'	
														71		509			
			71.7											72		508		0°,J,T,No,No,Pl,SR @ 72.4',72.5' 90°,J,T,No,No,Pl,SR @ 72.4-72.7'	
														73		507			
PQ	10	5.0	5.0	3.9	100	78								74		506		90°,J,T,No,No,Pl,SR @ 73.7-74.0'	
														75				80°,V,MW,Ca,Fi,Pl,SR @ 74.6-75.1'	

BLACK & VEATCH

BORING LOG

BORING NO. RB-C8

CLIENT	PROJECT	PROJECT NO.
Detroit Edison	Fermi 3 COL Application	147483

PROJECT LOCATION	COORDINATES	GROUND ELEVATION (DATUM)	TOTAL DEPTH
Monroe, MI	N 6110.9' E 4534.4'	580.4 ft (NAVD 88)	471.5 (feet)

SURFACE CONDITIONS	COORDINATE SYSTEM	DATE START	DATE FINISHED
Gravel parking lot near field	Plant	06/13/07	06/28/07

LOGGED BY	CHECKED BY	APPROVED BY
Ohlmacher GCO	Dogbey/Ohlmacher GCO	Meyer EM

SAMPLING							CORING										
SAMPLE TYPE	SAMPLE NUMBER	SET 6 INCHES	2ND 6 INCHES	3RD 6 INCHES	N VALUE	SAMPLE RECOVERY	CORE SIZE	RUN NUMBER	RUN LENGTH	RUN RECOVERY	RQD RECOVERY	PERCENT RECOVERY	RQD	DEPTH (FEET)	SAMPLE TYPE	ELEVATION (FEET)	GRAPHIC LOG

CLASSIFICATION OF MATERIALS	REMARKS
0°,J,VN,Cl,Pa,WV,SR @ 74.6'	
0°,J,T,No,No,Pl,SR @ 75.0'	
highly fractured @ 75.0-75.4'	Core box #6 starts @ 75.5'.
50°,J,VN,No,No,Pl,SR @ 75.1-75.5'	
20°J,VN,No,No,Pl,SR @ 75.3',75.8'	
25°,J,VN,No,No,Pl,SR @ 75.3-75.5'	
90°,J,T,No,No,Pl,SR @ 76.1-76.7',76.8-77.0'	
0°,J,T,No,No,Pl,SR @ 76.4',76.5',76.9',77.0'	
0°,J,T,No,No,Pl,SR @ 77.8'	
0°,J,T,No,No,Pl,SR @ 78.7'	
60°,J,T,No,No,Pl,SR @ 78.5-78.7'	
highly fractured @ 79.0-79.4'	
0°,J,T,No,No,Pl,SR @ 79.1',79.3',79.8'	
45°,J,T,No,No,Pl,SR @ 79.3-79.6', 79.3-79.4'	
90°,J,T,No,No,Pl,SR @ 79.9-80.4',81.1-81.3'	
0°,J,T,No,No,Pl,SR @ 80.5',81.1'	
81.3	
SHALE; fissile; black; fresh; weak; low hardness; parting; (Bass Islands Group).	
81.8	
DOLOMITE; gray; micritic; fresh; strong; moderately hard; 5% vugs; banded; (Bass Islands Group).	
0°,J,MW,Cl,Fi,Pl,SR @ 81.9'	
0°,J,T,No,No,Pl,SR @ 82.1',82.6',83.4'	
highly fractured @ 82.6-82.7'	
90°,J,T,No,No,Pl,SR @ 82.7-82.9'	
20°J,VN,No,No,Pl,SR @ 82.9',83.2'	
30°,J,VN,Cl,Pa,Pl,SR @ 83.8-84.0'	
0.02' thick black shale parting @ 84.4'	Core box #7 starts @ 84.4'.
15°,J,VN,Cl,Pa,Pl,SR @ 85.0'	
60°,J,VN,Ca,Fi,Pl,SR @ 85.0-85.3'	
70°,J,T,No,No,Pl,SR @ 85.2-85.9'	
0°,J,T,No,No,Pl,SR @ 85.9'	
30°,J,VN,Cl,Pa,Pl,SR @ 86.0-86.1',86.4-86.5'	
90°,J,T,No,No,Pl,SR @ 86.5-86.6'	
80°,J,T,No,No,Pl,SR @ 86.8-87.6'	
0°,J,T,No,No,Pl,SR @ 86.9',87.1'	
15°,J,VN,Cl,Pa,Pl,SR @ 87.4'	
15°,J,VN,Cl,Pa,Pl,SR @ 88.0'	
90°,J,T,No,No,Pl,SR @ 88.3-88.6'	
0°,J,T,No,No,Pl,SR @ 88.6'	
0°,J,VN,Cl,Pa,WA,SR @ 88.9'	
90°,J,T,No,No,Pl,SR @ 89.1-89.5'	

CORING							DEPTH (FEET)	ELEVATION (FEET)
							75	505
							76	504
			76.7				77	503
PQ	11	5.0	4.8	2.7	96	54	78	502
							79	501
							80	500
							81	499
			81.7				82	498
PQ	12	5.0	5.0	3.3	100	66	83	497
							84	496
							85	495
							86	494
			86.7				87	493
PQ	13	5.0	5.0	3.9	100	78	88	492
							89	491
							90	

BLACK & VEATCH

BORING LOG

BORING NO. RB-C8

CLIENT	PROJECT	PROJECT NO.
Detroit Edison	Fermi 3 COL Application	147483

PROJECT LOCATION	COORDINATES	GROUND ELEVATION (DATUM)	TOTAL DEPTH
Monroe, MI	N 6110.9' E 4534.4'	580.4 ft (NAVD 88)	471.5 (feet)

SURFACE CONDITIONS	COORDINATE SYSTEM	DATE START	DATE FINISHED
Gravel parking lot near field	Plant	06/13/07	06/28/07

LOGGED BY	CHECKED BY	APPROVED BY
Ohlmacher GCO	Dogbey/Ohlmacher GCO	Meyer EM

SAMPLING							CORING										
SAMPLE TYPE	SAMPLE NUMBER	SET 6 INCHES	2ND 6 INCHES	3RD 6 INCHES	N VALUE	SAMPLE RECOVERY	CORE SIZE	RUN NUMBER	RUN LENGTH	RUN RECOVERY	RQD RECOVERY	PERCENT RECOVERY	RQD	DEPTH (FEET)	SAMPLE TYPE	ELEVATION (FEET)	GRAPHIC LOG

CLASSIFICATION OF MATERIALS	REMARKS
20°,J,VN,Cl,Pa,Pl,SR @ 90.1'	
90.6	
BRECCIA; indurated; dolomite clasts in dolomite matrix; gray; medium to very coarse grained; fresh; strong; moderately hard; (Bass Islands Group).	
91.0	
DOLOMITE; gray; micritic; fresh; strong; moderately hard; banded; (Bass Islands Group).	
highly fractured @ 91.0-91.5'	
0°,J,T,No,No,Pl,SR @ 91.4',91.5'	
0.01' thick black shale parting @ 91.7'	
contorted bedding @ 91.8-92.6'	Core box #8 starts @ 93.3'.
0°,J,VN,No,No,Pl,SR @ 92.5',92.8',93.0',93.2',93.5', 94.0', 94.05',94.1',94.5',95.0',95.1',95.2',95.7'	
0°,J,VN,Cl,Pa,WA,SR @ 93.7', 96.2'	
90°,J,T,No,No,Pl,SR @ 94.2-94.5'	
highly fractured @ 96.0-96.1'	
contorted bedding @ 96.3-96.6'	
0°,J,VN,No,No,Pl,SR @ 96.4',96.6'	
0°,J,VN,No,No,Pl,SR @ 96.8',97.1',97.2',97.7',97.8'	
15°,J,VN,No,No,Pl,SR @ 97.5'	
90°,J,T,No,No,Pl,SR @ 97.5-98.6'	
0°,J,VN,No,No,Pl,SR @ 99.1',99.5',99.8'	
90°,J,T,No,No,Pl,SR @ 99.4-100.2',	
0°,J,VN,No,No,Pl,SR @ 100.0',100.2'	
80°,V,N,Ca,Fi,Pl,SR @ 100.2-101.4'	
0°,J,VN,No,No,Pl,SR @ 100.9',101.5'	
70°,V,N,Ca,Fi,Pl,SR @ 100.9-101.4'	
90°,J,T,No,No,Pl,SR @ 101.5-101.7',101.7-102.3'	
grading massive; no banding @ 101.7'	Water level @ 15.1' prior to drilling on 06/16/07. Core box #9 starts @ 101.7'.
90°,J,T,No,No,Pl,SR @ 102.4-103.1'	
0°,J,T,No,No,Pl,S @ 102.9', 103.1'	
90°,J,T,No,No,Pl,SR @ 103.1-103.8'	
70°,J,T,No,No,Pl,SR @ 104.4-105.0'	

SAMPLE TYPE	SAMPLE NUMBER	SET 6 INCHES	2ND 6 INCHES	3RD 6 INCHES	N VALUE	SAMPLE RECOVERY	CORE SIZE	RUN NUMBER	RUN LENGTH	RUN RECOVERY	RQD RECOVERY	PERCENT RECOVERY	RQD
										91.7			
							PQ	14	5.0	5.0	2.4	100	48
										96.7			
							PQ	15	5.0	5.0	2.9	100	58
										101.7			
							PQ	16	5.0	4.9	4.5	98	90

BLACK & VEATCH

BORING LOG

BORING NO. RB-C8

CLIENT	PROJECT	PROJECT NO.
Detroit Edison	Fermi 3 COL Application	147483

PROJECT LOCATION	COORDINATES	GROUND ELEVATION (DATUM)	TOTAL DEPTH
Monroe, MI	N 6110.9' E 4534.4'	580.4 ft (NAVD 88)	471.5 (feet)

SURFACE CONDITIONS	COORDINATE SYSTEM	DATE START	DATE FINISHED
Gravel parking lot near field	Plant	06/13/07	06/28/07

LOGGED BY	CHECKED BY	APPROVED BY
Ohlmacher GCO	for Dogbey/Ohlmacher GCO	Meyer EM

SAMPLING							CORING									
SAMPLE TYPE	SAMPLE NUMBER	SET 6 INCHES	2ND 6 INCHES	3RD 6 INCHES	N VALUE	SAMPLE RECOVERY	CORE SIZE	RUN NUMBER	RUN LENGTH	RUN RECOVERY	RQD RECOVERY	PERCENT RECOVERY	RQD	DEPTH (FEET)	SAMPLE TYPE	ELEVATION (FEET)	GRAPHIC LOG	CLASSIFICATION OF MATERIALS	REMARKS
														105		475		90°,J,T,No,No,Pl,SR @ 105.0-105.2',105.4-105.6', 105.6-106.3', 111.2-111.7' 40°,J,T,No,No,Pl,SR @ 105.2-105.4' 0°,J,VN,No,No,Pl,SR @ 105.4'	
														106		474		0°,J,VN,Ca,Fi,Pl,SR @ 106.1' 30°,J,VN,Ca,Fi,Pl,SR @ 106.5-106.6'	
			106.7											107		473		grades 5% vugs @ 107.3' 50°,J,T,No,No,Pl,SR @ 107.3-107.5',107.4-107.6',	
														108		472			
PQ	17	5.0	5.0	4.2	100	84								109		471		70°,J,VN,Ca,Pa,Pl,SR @ 109.1-109.9'	
														110		470		unit has ~10° dip @ 110.0' 75°,J,VN,No,No,Pl,SR @ 110.5-111.1'	
														111		469		breccia; indurated w/some rounded clasts @ 110.8-111.0' 15°,J,VN,No,No,Pl,SR @ 111.1', 115.3'	
			111.7											112		468		90°,J,T,No,No,Pl,SR @ 111.2-111.4',111.8-113.2' 25°,J,VN,No,No,Pl,S @ 111.2' 60°,V,VN,Ca,Fi,Pl,SR @ 111.4-111.6' 111.7 BRECCIA; indurated; dolomite clasts in dolomite matrix; gray to brownish gray; micritic to very coarse grained; slightly weathered; strong; moderately hard; (Bass Islands Group).	Core box #10 starts @ 111.7'.
														113		467		0°,J,VN,No,No,Pl,SR @ 112.1',113.1',113.7' highly fractured @ 112.1-115.3'	
PQ	18	5.0	4.0	0.0	80	0								114		466		50°,J,T,No,No,Pl,SR @ 113.2-113.8',113.7-114.2' 30°,J,VN,No,No,Pl,SR @ 113.5-113.6' 90°,J,T,No,No,Pl,SR @ 114.1-115.4' 114.3 DOLOMITE; gray; micritic; fresh; strong; moderately hard; banded; (Bass Islands Group).	
														115		465		0°,J,VN,No,No,Pl,SR @ 114.8' 40°,J,T,No,No,Pl,SR @ 114.9-115.1',115.0-115.5'	
														116		464			
			116.7											117		463		116.7 highly fractured @ 116.7-118.2' DOLOMITE; argillaceous; dark gray; micritic; fresh; strong; moderately hard; banded; (Salina Group - Unit F).	
														118		462		90°,J,T,No,No,Pl,SR @ 117.4-117.7' 0°,J,VN,No,No,Pl,SR @ 117.7',118.0',118.2' 90°,J,T,No,No,Pl,SR @ 118.0-118.2' 118.3 SHALE; dark gray; fresh; weak; friable; (Salina Group - Unit F).	
PQ	19	5.0	3.9	0.0	78	0								119		461		119.5 SHALE; dolomitic; interbedded w/DOLOMITE;	
														120					

BLACK & VEATCH

BORING LOG

BORING NO. RB-C8

CLIENT	PROJECT	PROJECT NO.
Detroit Edison	Fermi 3 COL Application	147483

PROJECT LOCATION	COORDINATES	GROUND ELEVATION (DATUM)	TOTAL DEPTH
Monroe, MI	N 6110.9' E 4534.4'	580.4 ft (NAVD 88)	471.5 (feet)

SURFACE CONDITIONS	COORDINATE SYSTEM	DATE START	DATE FINISHED
Gravel parking lot near field	Plant	06/13/07	06/28/07

LOGGED BY	CHECKED BY	APPROVED BY
Ohlmacher GCO	Dogbey/Ohlmacher GCO	Meyer EM

SAMPLING							CORING									
SAMPLE TYPE	SAMPLE NUMBER	SET 6 INCHES	2ND 6 INCHES	3RD 6 INCHES	N VALUE	SAMPLE RECOVERY	CORE SIZE	RUN NUMBER	RUN LENGTH	RUN RECOVERY	RQD RECOVERY	PERCENT RECOVERY	RQD	DEPTH (FEET)	SAMPLE TYPE	ELEVATION (FEET)	GRAPHIC LOG	CLASSIFICATION OF MATERIALS	REMARKS
														120		460		argillaceous; dark gray, brownish gray to gray; micritic; fresh; weak; friable to moderately hard; banded; vugs to 1.5" filled w/calcite; (Salina Group - Unit F). 40°,J,T,No,No,Pl,SR @ 119.5-119.7'	
														121		459		90°,J,VN,No,No,Pl,SR @ 119.7-120.5',120.0-120.5', 120.6-121.2',120.8-121.1',123.2-123.9'	
			121.7											122		458		0°,J,VN,No,No,Pl,SR @ 119.7' highly fractured @ 120.7-121.3' 0°,J,VN,No,No,Pl,SR @ 120.9', 120.8', 120.7', 120.2', 123.1', 123.7', 123.9'	Core box #11 starts @ 121.7'.
														123		457		40°,J,VN,No,No,Pl,SR @ 121.2-121.4' highly fractured @ 121.7-122.5' 45°,J,VN,No,No,Pl,SR @ 122.6-122.8'	
																		123.4	
PQ	20	5.0	3.9	1.1	78	22								124		456		DOLOMITE; argillaceous; (Salina Group - Unit F).	
																		124.0	
														125		455		SHALE; brownish gray to dark gray; fresh; weak; friable to moderately hard; interbedded w/thin anhydrite partings; (Salina Group - Unit F). highly fractured @ 124.3-125.2'	
														126		454		90°,J,VN,No,No,Pl,SR @ 125.9-126.5', grades black; strong; w/calcite & anhydrite crystals @ 126.1'	
			126.7															126.7	
														127		453		SHALE; brownish gray to dark gray; fresh; weak; friable; interbedded w/dolomitic shale & anhydrite; (Salina Group - Unit F).	
														128		452		0°,J,VN,No,No,Pl,SR @ 127.0',127.4',128.6',128.9' highly fractured @ 127.5-127.7',128.1-128.3'	
														129		451		129.0	
PQ	21	5.0	4.8	3.2	96	64												SHALE; dolomitic; gray; fresh; moderately strong; low hardness; (Salina Group - Unit F).	
														130		450		90°,J,VN,No,No,Pl,SR @ 130.0-131.1',131.5-131.7' 0°,J,VN,No,No,Pl,SR @ 130.2',130.9'	
														131		449		0°,J,VN,No,No,Pl,SR @ 131.1',131.3',131.5'	
			131.7															highly fractured @ 131.7-133.6'	Core box #12 starts @ 131.7'. Possible core loss @ 131.7'-133.6'
														132		448			
														133		447		0°,J,VN,No,No,Pl,SR @ 133.6',133.8' 90°,J,VN,No,No,Pl,SR @ 133.6-133.8',134.0-134.6' highly fractured @ 133.8-134.0' grades weak, friable @ 134.0' 40°,J,VN,No,No,Pl,SR @ 134.4-134.6'	
PQ	22	5.0	3.3	0.5	66	10								134		446			
														135					

BLACK & VEATCH

BORING LOG

BORING NO. RB-C8

CLIENT	PROJECT	PROJECT NO.
Detroit Edison	Fermi 3 COL Application	147483

PROJECT LOCATION	COORDINATES	GROUND ELEVATION (DATUM)	TOTAL DEPTH
Monroe, MI	N 6110.9' E 4534.4'	580.4 ft (NAVD 88)	471.5 (feet)

SURFACE CONDITIONS	COORDINATE SYSTEM	DATE START	DATE FINISHED
Gravel parking lot near field	Plant	06/13/07	06/28/07

LOGGED BY	CHECKED BY	APPROVED BY
Ohlmacher GCO	Dogbey/Ohlmacher GCO	Meyer EM

SAMPLING							CORING									
SAMPLE TYPE	SAMPLE NUMBER	SET 6 INCHES	2ND 6 INCHES	3RD 6 INCHES	N VALUE	SAMPLE RECOVERY	CORE SIZE	RUN NUMBER	RUN LENGTH	RUN RECOVERY	RQD RECOVERY	PERCENT RECOVERY	RQD	DEPTH (FEET)	SAMPLE TYPE	ELEVATION (FEET)	GRAPHIC LOG	CLASSIFICATION OF MATERIALS	REMARKS
														135		445		135.3 DOLOMITE; argillaceous; gray; micritic; fresh (upper 0.2' moderately weathered); strong; moderately hard; banded; (Salina Group - Unit F). highly fractured @ 135.3-135.6' 0°,J,VN,No,No,Pl,SR @ 135.6',135.7',136.0' 90°,J,T,No,No,Pl,SR @ 135.8-136.4',137.1-137.4' highly fractured @ 136.7-138.1'	
										136.7				136		444			
														137		443		137.6 SHALE; dolomitic; greenish gray; fresh; weak; friable; crumbly; (Salina Group - Unit F).	Core loss possibly due to washout.
														138		442			
PQ	23	5.0	3.0	0.0	60	0								139		441			
														140		440			
														141		439			
										141.7				142		438		highly fractured @ 141.7-142.0' 90°,J,VN,No,No,Pl,SR @ 142.0-142.4' 0°,J,VN,No,No,Pl,SR @ 142.0'	
														143		437		highly fractured shale, VC @ 143.0-144.5'	
PQ	24	5.0	4.5	1.7	90	34								144		436			Core box #13 starts @ 144.4'.
														145		435		0°,J,VN,No,No,Pl,SR @ 144.7',145.1',145.4,145.7', 145.9' 70°,J,VN,No,No,Pl,SR @ 145.4-145.6' thin parting; anhydrite w/shale @ 145.4-145.6' highly fractured shale @ 145.7-145.9'	
														146		434			
										146.7				147		433		146.7 DOLOMITE; argillaceous; bluish gray; micritic; fresh; strong; moderately hard; medium bedded; (Salina Group - Unit F). highly fractured @ 146.7-147.1' 0°,J,VN,No,No,Pl,SR @ 147.1',147.5' 70°,J,VN,No,No,Pl,SR @ 147.1-147.4' highly fractured @ 147.5-147.9'	
														148		432		147.8	
PQ	25	5.0	3.5	1.3	70	26								149		431		SHALE; dolomitic; greenish gray; fresh; weak; friable; parting; (Salina Group - Unit F). 0°,J,VN,No,No,Pl,SR @ 147.9' 70°,J,VN,No,No,Pl,SR @ 147.9-148.1',149.4-149.9'	
														150					

BLACK & VEATCH

BORING LOG

BORING NO. RB-C8

CLIENT	PROJECT	PROJECT NO.
Detroit Edison	Fermi 3 COL Application	147483

PROJECT LOCATION	COORDINATES	GROUND ELEVATION (DATUM)	TOTAL DEPTH
Monroe, MI	N 6110.9' E 4534.4'	580.4 ft (NAVD 88)	471.5 (feet)

SURFACE CONDITIONS	COORDINATE SYSTEM	DATE START	DATE FINISHED
Gravel parking lot near field	Plant	06/13/07	06/28/07

LOGGED BY	CHECKED BY	APPROVED BY
Ohlmacher GCO	Dogbey/Ohlmacher GCO	Meyer EM

SAMPLING							CORING									
SAMPLE TYPE	SAMPLE NUMBER	SET 6 INCHES	2ND 6 INCHES	3RD 6 INCHES	N VALUE	SAMPLE RECOVERY	CORE SIZE	RUN NUMBER	RUN LENGTH	RUN RECOVERY	RQD RECOVERY	PERCENT RECOVERY	RQD	DEPTH (FEET)	SAMPLE TYPE	ELEVATION (FEET)	GRAPHIC LOG	CLASSIFICATION OF MATERIALS	REMARKS
														150		430		highly fractured @ 148.6-149.4'	
														151		429		argillaceous dolomite band @ 151.0-151.1' highly fractured @ 151.1-151.7'	
			151.7											152		428		bluish gray dolomite band; highly fractured @ 152.0-152.2'	Water level @ 14.9' prior to drilling on 06/17/07.
														153		427		bluish gray argillaceous dolomite band; highly fractured @ 153.0-153.1' 90°,J,VN,No,No,Pl,SR @ 153.0-153.1' 55°,J,VN,No,No,Pl,SR @ 153.2-153.6'	
PQ	26	5.0	3.3	0.9	66	18								154		426		0°,J,VN,No,No,Pl,SR @ 153.8', 155.3'	
														155		425		40°,J,VN,No,No,Pl,SR @ 155.1-155.3'	
														156		424		90°,J,VN,No,No,Pl,SR @ 155.7-156.0',	
			156.7											157		423		dark bluish gray; argillaceous dolomite band @ 157.1-157.2'	Core box #14 starts @ 156.7'.
														158		422		dark bluish gray; thin argillaceous dolomite bed @ 157.8-158.2' 90°,J,VN,No,No,Pl,SR @ 157.8-158.2'	
PQ	27	5.0	2.9	1.6	58	32								159		421		dark bluish gray; argillaceous dolomite band @ 159.1-159.2'	
														160		420		dark bluish gray; argillaceous dolomite band @ 160.0-160.2' highly fractured @ 160.0-161.2'	
														161		419		argillaceous dolomite band @ 161.0-161.2'	
			161.7											162		418		dark bluish gray dolomite band @ 161.7-161.8'	
														163		417		163.0 DOLOMITE; argillaceous; greenish gray; (Salina Group - Unit F). 90°,J,VN,No,No,Pl,SR @ 163.0-163.2',163.5-164.1' highly fractured @ 163.2-164.1'	
PQ	28	5.0	2.4	0.0	48	0								164		416		164.6 SHALE; dolomitic; greenish gray; fresh; weak; friable;	
														165					

BLACK & VEATCH

BORING LOG

BORING NO. RB-C8

CLIENT	PROJECT	PROJECT NO.
Detroit Edison	Fermi 3 COL Application	147483

PROJECT LOCATION	COORDINATES	GROUND ELEVATION (DATUM)	TOTAL DEPTH
Monroe, MI	N 6110.9' E 4534.4'	580.4 ft (NAVD 88)	471.5 (feet)

SURFACE CONDITIONS	COORDINATE SYSTEM	DATE START	DATE FINISHED
Gravel parking lot near field	Plant	06/13/07	06/28/07

LOGGED BY	CHECKED BY	APPROVED BY
Ohlmacher GCO	Dogbey/Ohlmacher GCO	Meyer EM

SAMPLING							CORING									
SAMPLE TYPE	SAMPLE NUMBER	SET 6 INCHES	2ND 6 INCHES	3RD 6 INCHES	N VALUE	SAMPLE RECOVERY	CORE SIZE	RUN NUMBER	RUN LENGTH	RUN RECOVERY	RQD RECOVERY	PERCENT RECOVERY	RQD	DEPTH (FEET)	SAMPLE TYPE	ELEVATION (FEET)	GRAPHIC LOG	CLASSIFICATION OF MATERIALS	REMARKS
														165		415		(Salina Group - Unit F). dark bluish gray; thin dolomite bed @ 165.0-165.4' highly fractured @ 165.0-165.4'	
														166		414			
			166.7											167		413			Raised drill stem to remove core barrel. Material caving into boring.
														168		412			
PQ	29	5.0	0.8	0.0	16	0								169		411		dark bluish gray; thin argillaceous dolomite bed @ 169.2-169.5'	
														170		410			
														171		409			
			171.7											172		408			
														173		407		bluish gray; thin argillaceous dolomite bed; highly fractured @ 172.7-173.0'	
PQ	30	5.0	3.0	1.1	60	22								174		406		90°,J,T,No,No,Pl,SR @ 174.0-174.1', 177.4-177.9' dark bluish gray; dolomitic shale band @ 174.0-174.1' 20°,J,T,No,No,Pl,SR @ 174.1'	
														175		405		174.8 BRECCIA; shale & dolomite clasts in poorly indurated claystone matrix; dark bluish gray; micritic to very coarse; fresh; weak; low hardness; (Salina Group - Unit F).	
														176		404		175.8 BRECCIA; dolomitic shale clasts in poorly indurated to indurated argillaceous carbonate matrix; light brownish gray (clasts); dark bluish gray (matrix); micritic to very coarse; fresh; weak; moderate hardness; (Salina Group - Unit F). 0°,J,VN,No,No,Pl,S @ 176.5'	Core box #15 starts @ 176.7'.
			176.7											177		403			
														178		402		177.0 LIMESTONE; crystalline; very dark grayish brown; vuggy; micritic; slightly weathered; strong; hard; banded; (Salina Group - Unit F).	
PQ	31	5.0	1.5	0.0	30	0								179		401		178.0 SHALE; greenish gray; fresh; weak; friable; (Salina Group - Unit F). dark bluish gray; argillaceous dolomite band; highly	
														180					

BLACK & VEATCH

BORING LOG

BORING NO. RB-C8

CLIENT	PROJECT	PROJECT NO.
Detroit Edison	Fermi 3 COL Application	147483

PROJECT LOCATION	COORDINATES	GROUND ELEVATION (DATUM)	TOTAL DEPTH
Monroe, MI	N 6110.9' E 4534.4'	580.4 ft (NAVD 88)	471.5 (feet)

SURFACE CONDITIONS	COORDINATE SYSTEM	DATE START	DATE FINISHED
Gravel parking lot near field	Plant	06/13/07	06/28/07

LOGGED BY	CHECKED BY	APPROVED BY
Ohlmacher GCO	Dogbey/Ohlmacher GCO	Meyer EM

SAMPLING							CORING									
SAMPLE TYPE	SAMPLE NUMBER	SET 6 INCHES	2ND 6 INCHES	3RD 6 INCHES	N VALUE	SAMPLE RECOVERY	CORE SIZE	RUN NUMBER	RUN LENGTH	RUN RECOVERY	RQD RECOVERY	PERCENT RECOVERY	RQD	DEPTH (FEET)	SAMPLE TYPE	ELEVATION (FEET)	GRAPHIC LOG	CLASSIFICATION OF MATERIALS	REMARKS
														180		400		fractured @ 179.5-179.7'	Driller reported a water level drop.
														181		399			
			181.7											182		398		20°,J,VN,No,No,Pl,SR @ 182.5-182.6',182.2-182.3'	
																		182.5	
														183		397		BRECCIA; shale, siltstone, & dolomite clasts in poorly indurated calcareous claystone matrix; dark bluish gray; vuggy; micritic to very coarse grained; fresh; very weak; friable; banded; clasts are rounded to angular; elongate; siltstone clasts are very pale brown; (Salina Group - Unit F).	
PQ	32	5.0	3.9	1.6	78	32								184		396		0°,J,VN,No,No,Pl,SR @ 183.6',183.7',185.7' highly fractured @ 184.2-185.2'	
														185		395		20°,J,VN,No,No,Pl,SR @ 185.3-185.4' 65°,J,VN,No,No,Pl,SR @ 185.5-186.2'	
														186		394		brown; thin argillaceous limestone bed; vuggy @ 186.3-186.7'	
			186.7											187		393		30°,J,VN,No,No,Pl,SR @ 186.3-186.5' 90°,J,VN,No,No,Pl,SR @ 186.5-186.7' 0°,J,VN,No,No,Pl,SR @ 186.5',187.1' 30°,J,VN,No,No,Pl,SR @ 187.2-187.4 highly fractured @ 187.3-188.1'	
														188		392		40°,J,VN,No,No,Pl,R @ 187.8-188.1' 0°,J,VN,No,No,Pl,SR @ 188.3'	
PQ	33	5.0	4.0	1.0	80	20								189		391		20°,J,VN,No,No,Pl,SR @ 188.7-188.5',189.7-189.9' 0°,J,VN,No,No,Pl,SR @ 189.0'	
														190		390		20°,J,VN,No,No,Pl,SR @ 189.7-189.9' 70°,J,VN,No,No,Pl,R @ 189.7-190.1' highly fractured @ 190.0-190.2' 0°,J,VN,No,No,Pl,SR @ 190.3' clay filled void @ 190.3-190.6' 30°,J,VN,No,No,Pl,SR @ 190.4-190.5'	
														191		389		190.8 DOLOMITE; argillaceous; brown; banded; 5% vugs; (Salina Group - Unit F). 0°,J,T,No,No,Pl,S @ 190.9' 0°,J,VN,No,No,Pl,SR @ 191.1'	Core box #16 starts @ 191.1'.
			191.7											192		388		191.7 BRECCIA; shale, siltstone, & dolomite clasts in poorly indurated calcareous claystone matrix; dark bluish gray; vuggy; micritic to very coarse grained; fresh; very weak; friable; banded; clasts are rounded to angular; elongate; siltstone clasts are very pale brown; (Salina Group - Unit F).	
														193		387			
PQ	34	5.0	3.2	0.0	64	0								194		386		192.5 LIMESTONE; brown; vuggy; micritic; fresh; strong; hard; banded; (Salina Group - Unit F).	
														195					

BLACK & VEATCH

BORING LOG

BORING NO. RB-C8

CLIENT	PROJECT	PROJECT NO.
Detroit Edison	Fermi 3 COL Application	147483

PROJECT LOCATION	COORDINATES	GROUND ELEVATION (DATUM)	TOTAL DEPTH
Monroe, MI	N 6110.9' E 4534.4'	580.4 ft (NAVD 88)	471.5 (feet)

SURFACE CONDITIONS	COORDINATE SYSTEM	DATE START	DATE FINISHED
Gravel parking lot near field	Plant	06/13/07	06/28/07

LOGGED BY	CHECKED BY	APPROVED BY
Ohlmacher GCO	Dogbey/Ohlmacher GBO	Meyer EM

SAMPLING							CORING									
SAMPLE TYPE	SAMPLE NUMBER	SET 6 INCHES	2ND 6 INCHES	3RD 6 INCHES	N VALUE	SAMPLE RECOVERY	CORE SIZE	RUN NUMBER	RUN LENGTH	RUN RECOVERY	RQD RECOVERY	PERCENT RECOVERY	RQD	DEPTH (FEET)	SAMPLE TYPE	ELEVATION (FEET)	GRAPHIC LOG	CLASSIFICATION OF MATERIALS	REMARKS
														195		385		bluish gray; thin argillaceous dolomite bed; micritic @ 193.5-193.8' 90°,J,VN,No,No,PI,SR @ 193.5-193.8' highly fractured @ 193.8-196.0'	
														196		384		196.0 DOLOMITE; argillaceous; bluish gray; micritic; massive; (Salina Group - Unit F). 70°,J,T,No,No,PI,SR @ 196.1-196.5', 196.2-196.4'	
			196.7											197		383		196.7 LIMESTONE; brown; vuggy; micritic; fresh; strong; hard; banded; (Salina Group - Unit F).	Water level @ 22.5' prior to drilling on 06/18/07.
PQ	35	5.0	2.7	0.6	54	12								198		382		197.1 DOLOMITE; argillaceous; dark bluish gray; banded; (Salina Group - Unit F). 90°,J,T,No,No,PI,SR @ 197.1-197.6' highly fractured @ 197.1-197.6'	
														199		381		197.6 LIMESTONE; brown; vuggy; micritic; fresh; strong; hard; banded; (Salina Group - Unit F).	
														200		380		197.8 SHALE; dark bluish gray; fresh; very weak; friable; banded w/dolomite beds; (Salina Group - Unit F).	
														201		379		198.8 BRECCIA; poorly indurated; limestone & shale clasts in calcareous claystone matrix; dark bluish gray; coarse to fine grained; fresh; moderately strong; low hardness; vuggy; (Salina Group - Unit F). 60°, VN,No,No,PI,R @ 199.3-199.7'	
			201.7											202		378		200.8 SHALE; limey; dark bluish gray; fresh; very weak; friable; (Salina Group - Unit F).	
														203		377		201.8 BRECCIA; indurated; claystone & limestone clasts in an argillaceous limestone matrix; dark bluish gray & white; very coarse to fine grained; fresh; strong; low to moderately hard; appears vuggy on surface due to washout of surface clasts; (Salina Group - Unit F).	
PQ	36	5.0	5.0	1.8	100	36								204		376		0°,J,VN,No,No,PI,R @ 201.8', 202.6', 203.1', 203.5', 203.6', 203.7', 205.3', 205.5', 205.8', 206.1', 206.4', 206.6' highly fractured @ 204.3-204.9'	Core box #17 starts @ 204.2'.
														205		375		204.5 LIMESTONE; dark greenish gray & brown; micritic; fresh; strong; hard; banded; (Salina Group - Unit F). 80°,J,VN,No,No,PI,R @ 204.7-205.2' 90°,J,N,Ca,Pa,WA,R @ 205.3-206.2'	
														206		374		205.5 DOLOMITE; argillaceous; pale brown; micritic; fresh; moderately strong; low hardness; massive; (Salina Group - Unit F). 50°,J,VN,Ca,Pa,PI,SR @ 206.1-206.3'	
			206.7											207		373		0°,J,VN,No,No,PI,R @ 207.2', 207.4', 208.1', 208.9', 209.2', 209.5' 20°,J,VN,No,No,PI,R @ 207.4' 90°,J,VN,No,No,PI,R @ 207.5-207.9', 209.0-209.1' 15°,J,VN,No,No,PI,R @ 207.7'	
														208		372		208.1 LIMESTONE; dark greenish gray; vuggy; banded; (Salina Group - Unit F).	
PQ	37	5.0	4.2	0.85	84	17								209		371			
														210					

BLACK & VEATCH

BORING LOG

BORING NO. RB-C8

CLIENT	PROJECT	PROJECT NO.
Detroit Edison	Fermi 3 COL Application	147483

PROJECT LOCATION	COORDINATES	GROUND ELEVATION (DATUM)	TOTAL DEPTH
Monroe, MI	N 6110.9' E 4534.4'	580.4 ft (NAVD 88)	471.5 (feet)

SURFACE CONDITIONS	COORDINATE SYSTEM	DATE START	DATE FINISHED
Gravel parking lot near field	Plant	06/13/07	06/28/07

LOGGED BY	CHECKED BY	APPROVED BY
Ohlmacher GCO	Dogbey/Ohlmacher GCO	Meyer EM

SAMPLING: SAMPLE TYPE	SAMPLE NUMBER	SET 6 INCHES	2ND 6 INCHES	3RD 6 INCHES	N VALUE	SAMPLE RECOVERY	CORING: CORE SIZE	RUN NUMBER	RUN LENGTH	RUN RECOVERY	RQD RECOVERY	PERCENT RECOVERY	RQD	DEPTH (FEET)	SAMPLE TYPE	ELEVATION (FEET)	GRAPHIC LOG	CLASSIFICATION OF MATERIALS	REMARKS
														210		370		highly fractured @ 208.3-208.7' 90°,J,VN,No,No,WA,R @ 210.0-210.4' highly fractured @ 210.4-210.9'	
														211		369		210.7 DOLOMITE; argillaceous; pale brown; micritic; fresh; moderately strong; low hardness; massive; (Salina Group - Unit F).	
			211.7											212		368		35°,J,VN @ 210.9-211.3' 0°,J,VN,No,No,Pl,SR @ 211.3', 212.3', 212.5' 90°,J,VN,Ca,Fi,Pl,SR @ 211.4-211.7', 214.0-214.1' 20°,J,T,No,No,Pl,SR @ 212.0' 45°,J,T,No,No,Pl,SR @ 212.2-212.3'	
														213		367		212.6 LIMESTONE; greenish gray to brownish gray; micritic; fresh; strong; hard; banded; (Salina Group - Unit F).	
PQ	38	5.0	4.3	2.1	86	42								214		366		0°,J,N,No,No,WA,R @ 212.6', 212.7', 214.1', 214.0', 214.6', 214.7', 214.8', 215.2', 215.3', 215.4', 215.7'	
														215		365		213.4 DOLOMITE; argillaceous; pale brown; micritic; fresh; moderately strong; moderately hard; massive; (Salina Group - Unit F).	Core box #18 starts @ 214.8'.
														216		364		213.6 BRECCIA; indurated; argillaceous dolomite & limestone clasts in argillaceous dolomite matrix; pale brown & gray; fine to coarse grained; fresh; strong; hard; (Salina Group - Unit F). highly fractured @ 214.1-214.3'	
			216.7											217		363		214.2 DOLOMITE; argillaceous; light gray; micritic; fresh; strong; hard; massive; (Salina Group - Unit F).	
														218		362		50°,J,VN,No,No,WA,R @ 214.4-214.5', 215.5-215.7' 40°,J,N,No,No,WA,R @ 214.5-214.8' grades banded w/shale partings @ 214.7'	
PQ	39	5.0	4.5	0.4	90	8								219		361		215.2 LIMESTONE; gray; vuggy; micritic; fresh; very strong; hard; massive; (Salina Group - Unit F). highly fractured @ 215.3-215.8'	
														220		360		216.5 BRECCIA; poorly indurated; argillaceous dolomite clasts in dolomitic claystone matrix; brown & gray, fine to coarse grained; fresh; strong; hard; (Salina Group - Unit F). 90°,J,N,Ca,Pa,Pl @ 216.9-217.1', 217.7-218.0'	
														221		359		217.0 DOLOMITE; argillaceous; light gray; micritic; fresh; strong; hard; massive; (Salina Group - Unit F). 0°,J,N,No,No,Pl,R @ 217.2', 217.3', 217.6', 218.0' highly fractured @ 218.3-219.0'	
			221.7											222		358		219.5 BRECCIA; poorly indurated; shale & argillaceous dolomite clasts in dolomitic claystone matrix; dark bluish gray; fine to very coarse grained; fresh; strong (clasts); hard (clasts); two fining upward sequences; (Salina Group - Unit F). 0°,J,N,No,No,Pl,R @ 221.7'	Core loss @ 222.0'.
														223		357			
PQ	40	5.0	1.5	0.0	30	0								224		356		60°,J,T,No,No,Pl,SR @ 224.1-224.6'	
														225					

BLACK & VEATCH

BORING LOG

BORING NO. RB-C8

CLIENT	PROJECT	PROJECT NO.
Detroit Edison	Fermi 3 COL Application	147483

PROJECT LOCATION	COORDINATES	GROUND ELEVATION (DATUM)	TOTAL DEPTH
Monroe, MI	N 6110.9' E 4534.4'	580.4 ft (NAVD 88)	471.5 (feet)

SURFACE CONDITIONS	COORDINATE SYSTEM	DATE START	DATE FINISHED
Gravel parking lot near field	Plant	06/13/07	06/28/07

LOGGED BY	CHECKED BY	APPROVED BY
Ohlmacher GCO	Dogbey/Ohlmacher GCO	Meyer EM

SAMPLING: SAMPLE TYPE	SAMPLE NUMBER	SET 6 INCHES	2ND 6 INCHES	3RD 6 INCHES	N VALUE	SAMPLE RECOVERY	CORING: CORE SIZE	RUN NUMBER	RUN LENGTH	RUN RECOVERY	RQD RECOVERY	PERCENT RECOVERY	RQD	DEPTH (FEET)	SAMPLE TYPE	ELEVATION (FEET)	GRAPHIC LOG	CLASSIFICATION OF MATERIALS	REMARKS
														225		355			Shale or soft rock ground up, intact dolomite lodged in core barrel
														226		354			
			226.7											227		353		226.8 SHALE; poorly indurated; dark bluish gray; fresh; weak; friable; (Salina Group - Unit F).	Water level @ 23.7' prior to drilling on 06/19/07. Core box #19 starts @ 226.7'.
														228		352			
PQ	41	5.0	1.6	0.0	32	0								229		351		228.7 BRECCIA; poorly indurated to indurated; dolomite & shale clasts in dolomitic shale matrix; bluish gray; fine to very coarse grained; fresh; weak to strong; moderately hard; medium bedded; fining upward sequences; (Salina Group - Unit F).	Core barrel plugged with clay, shale, & limestone fragments
														230		350			
														231		349			
			231.7											232		348		highly fractured @ 231.7-232.1' 0°,J,VN,No,No,Pl,SR @ 232.2',232.3',232.5',232.9'	
														233		347		70°,J,VN,No,No,Pl,SR @ 233.2-233.7', 233.5-233.9', 233.7-234.0' highly fractured @ 233.6-234.1'	
PQ	42	5.0	4.5	0.7	90	14								234		346		grades calcite cemented w/white calcite crystals in vugs (10%) @ 233.8' 15°,J,VN,No,No,Pl,SR @ 234.3' 30°,J,T,No,No,Pl,SR @ 234.5-234.6' highly fractured @ 234.9-235.1'	
														235		345		235.2 LIMESTONE; brown; vuggy; (Salina Group - Unit F). 0°,J,VN,No,No,Pl,SR @ 235.5', 235.9',236.0',236.1', 236.2',236.4'	
														236		344			
			236.7											237		343		236.7 DOLOMITE; argillaceous; dark bluish gray; micritic; fresh; very strong; moderately hard; banded; (Salina Group - Unit E). 0°,J,VN,No,No,Pl,SR @ 237.1',237.3',237.4', 237.5', 237.6',237.7' 90°,J,T,No,No,Pl,SR @ 237.5-237.7' grades very pale brown; strong; massive w/shale partings; shells (0.05'); 237.8'	
														238		342			
PQ	43	5.0	4.4	2.3	88	46								239		341		0°,J,VN,No,No,Pl,SR @ 237.8',237.9',238.0',238.3', 238.5', 238.9',239.3' 50°,V,N,Ca,Fi,Pl,R @ 238.7-238.8' 70°,J,T,No,No,Pl,SR @ 238.8-239.3'	
														240					

BLACK & VEATCH

BORING LOG

BORING NO. RB-C8

CLIENT	PROJECT	PROJECT NO.
Detroit Edison	Fermi 3 COL Application	147483

PROJECT LOCATION	COORDINATES	GROUND ELEVATION (DATUM)	TOTAL DEPTH
Monroe, MI	N 6110.9' E 4534.4'	580.4 ft (NAVD 88)	471.5 (feet)

SURFACE CONDITIONS	COORDINATE SYSTEM	DATE START	DATE FINISHED
Gravel parking lot near field	Plant	06/13/07	06/28/07

LOGGED BY	CHECKED BY	APPROVED BY
Ohlmacher GCC	Dogbey/Ohlmacher GCO	Meyer EM

SAMPLING: SAMPLE TYPE	SAMPLE NUMBER	SET 6 INCHES	2ND 6 INCHES	3RD 6 INCHES	N VALUE	SAMPLE RECOVERY

CORING: CORE SIZE	RUN NUMBER	RUN LENGTH	RUN RECOVERY	RQD RECOVERY	PERCENT RECOVERY	RQD
PQ	44	5.0	4.6	1.8	92	36
PQ	45	5.0	4.9	4.9	98	98
PQ	46	5.0	4.3	1.4	86	28

DEPTH (FEET)	SAMPLE TYPE	ELEVATION (FEET)	GRAPHIC LOG	CLASSIFICATION OF MATERIALS	REMARKS
240		340		80°,V,VN,Ca,Fi,Pl,R @ 238.8-239.3' highly fractured @ 239.6-240.1'	Core box #20 starts @ 240.1'.
241		339			
241.7				grades 5% vugs @ 241.7' 0°,J,VN,No,No,Pl,S @ 241.8',242.4',242.5'(2),242.8'	
242		338			
				90°,J,T,Ca,No,No,Pl,SR @ 242.5-243.1' grades 0% vugs @ 242.5'	
243		337		242.8 LIMESTONE; bluish gray; micritic; fresh; strong; hard; banded; (Salina Group - Unit E). 0°,J,VN,No,No,Pl,S @ 243.1'	
244		336		very closely spaced horizontal fractures @ 243.4-244.1' 243.4	
245		335		DOLOMITE; argillaceous; very pale brown; micritic; fresh; strong; moderately hard; massive; w/shale partings; shells (0.05'); (Salina Group - Unit E). 0°,J,VN,No,No,Pl,S @ 244.3',244.6',244.7',244.8', 244.9',245.0',245.1',245.7' 90°,J,T,Ca,No,No,Pl,SR @ 244.3-244.6' 25°,J,VN,No,No,Pl,SR @ 245.4-245.5' 70°,J,T,No,No,Pl,SR @ 246.3-246.5'	
246		334			
246.7					
247		333		0°,B,VN,No,No,Pl,SR @ 247.2',247.7',248.1'	
248		332		75°,J,T,No,No,Pl,SR @ 248.2-248.7'	
249		331		0°,B,VN,No,No,Pl,SR @ 249.0',250.5', 250.9' 90°,J,T,No,No,Pl,SR @ 249.4-250.4', 250.5-250.9', 251.3-251.6'	Core box #21 starts @ 249.0'.
250		330			
251		329		grades to light gray @ 250.7'.	
251.7				highly fractured @ 251.7-253.2' shale & argillaceous dolomite; dark bluish gray @ 251.8-252.1'	
252		328		grades light brown; banded @ 252.5'	
253		327		grades gray; massive @ 253.2' 70°,J,T,No,No,Pl,SR @ 253.2-253.5' 20°,B,VN,No,No,Pl,SR @ 253.5', 253.8' 30% vugs @ 253.7-254.2'	
254		326			
255				10°,B,VN,No,No,Pl,SR @ 254.7'	

BLACK & VEATCH

BORING LOG

BORING NO. RB-C8

CLIENT	PROJECT	PROJECT NO.
Detroit Edison	Fermi 3 COL Application	147483

PROJECT LOCATION	COORDINATES	GROUND ELEVATION (DATUM)	TOTAL DEPTH
Monroe, MI	N 6110.9' E 4534.4'	580.4 ft (NAVD 88)	471.5 (feet)

SURFACE CONDITIONS	COORDINATE SYSTEM	DATE START	DATE FINISHED
Gravel parking lot near field	Plant	06/13/07	06/28/07

LOGGED BY	CHECKED BY	APPROVED BY
Ohlmacher GeO	Dogbey/Ohlmacher GeO	Meyer EM

SAMPLING							CORING							DEPTH (FEET)	SAMPLE TYPE	ELEVATION (FEET)	GRAPHIC LOG	CLASSIFICATION OF MATERIALS	REMARKS
SAMPLE TYPE	SAMPLE NUMBER	SET 6 INCHES	2ND 6 INCHES	3RD 6 INCHES	N VALUE	SAMPLE RECOVERY	CORE SIZE	RUN NUMBER	RUN LENGTH	RUN RECOVERY	RQD RECOVERY	PERCENT RECOVERY	RQD						
														255		325		interbedded bluish gray shale & argillaceous dolomite; shale layers up to 0.05' thick (banded) @ 254.9-255.2'	
														256		324		0°,B,VN,No,No,Pl,SR @ 255.2',257.0' 0°,V,VN,anhydrite,Fi,Pl,SR @ 255.3', 255.4', 255.9', 256.0' anhydrite veins increasing w/depth; dolomite grades banded @ 255.4'	
				256.7										257		323		0°,B,N,anhydrite,Fi,Pl,SR @ 255.5', 256.1', 256.2' 0°,V,N,anhydrite,Fi,Pl,SR @ 256.15' highly fractured, VC, veins; anhydrite; over 50% veins; up to narrow aperture @ 256.3-257.0'	
														258		322		anhydrite vein spacing decreasing @ 257.0' thin anhydrite bed @ 257.8-258.2' 0°,J,VN,No,No,Pl,R @ 257.8',259.0' grades light brown @ 258.2'	
PQ	47	5.0	4.9	3.8	98	76								259		321		band of anhydrite @ 258.3-258.4' grades 20% anhydrite nodules; moderately wide spaced anhydrite-filled veins; VN @ 258.5'	Core box #22 starts @ 258.9'.
														260		320		grades no anhydrite nodules; no anhydrite veins @ 259.6' 0°,J,VN,No,No,Pl,R @ 260.0',260.7' grades grayish brown; massive @ 260.0' 0°,J,VN,anhydrite,Pa,Pl,R @ 260.3', 260.8'	
														261		319		grades very dark bluish gray @ 260.9' 0°,B,VN,No,No,Pl,SR @ 261.1',261.4'	
				261.7										262		318			
														263		317		grades alternating light brown; banded w/anhydrite bands up to 1/2" thick & anhydrite veins @ 262.5' 0°,B,VN,anhydrite,Pa,Pl,SR @ 262.6' grades no anhydrite @ 263.1' 0°,B,T,No,No,Pl,S @ 263.2', 264.6' anhydrite veins, VN,Pl,SR @ 263.4'	
PQ	48	5.0	5.0	5.0	100	100								264		316		thin anhydrite bed w/argillaceous dolomite @ 263.8-264.1' 0°,J,VN,No,No,Pl,R @ 264.0', 265.7'	
														265		315		265.0 ANHYDRITE; white to light gray; micritic; fresh; strong; low hardness; banded; w/argillaceous dolomite beds; (Salina Group - Unit E).	Water level @ 22.6' prior to drilling on 06/20/07.
														266		314			
				266.7										267		313		0°,J,N,No,No,Pl,R @ 267.1' 267.3 DOLOMITE; argillaceous; banded light brownish gray & gray; micritic; fresh; strong; hard; massive; fossils (<1%); (Salina Group - Unit E).	
														268		312		20°,V,N,anhydrite,Fi,WA,S @ 267.3' 0°,V,N,anhydrite,Fi,Pl,SR @ 268.0' grades banded light brownish gray & brown @ 268.1'	
PQ	49	5.0	5.0	4.7	100	94								269		311		0°,B,T,No,No,Pl,S @ 268.8' grades gray & black; w/black shale partings every 0.1-0.2' @ 268.8'	Core box #23 starts @ 268.8'.
														270					

BORING LOG

CLIENT	PROJECT	PROJECT NO.
Detroit Edison	Fermi 3 COL Application	147483

PROJECT LOCATION	COORDINATES	GROUND ELEVATION (DATUM)	TOTAL DEPTH
Monroe, MI	N 6110.9' E 4534.4'	580.4 ft (NAVD 88)	471.5 (feet)

SURFACE CONDITIONS	COORDINATE SYSTEM	DATE START	DATE FINISHED
Gravel parking lot near field	Plant	06/13/07	06/28/07

LOGGED BY	CHECKED BY	APPROVED BY
Ohlmacher GCO	Dogbey/Ohlmacher GCO	Meyer EM

SAMPLING							CORING									
SAMPLE TYPE	SAMPLE NUMBER	SET 6 INCHES	2ND 6 INCHES	3RD 6 INCHES	N VALUE	SAMPLE RECOVERY	CORE SIZE	RUN NUMBER	RUN LENGTH	RUN RECOVERY	RQD RECOVERY	PERCENT RECOVERY	RQD	DEPTH (FEET)	SAMPLE TYPE	ELEVATION (FEET)	GRAPHIC LOG	CLASSIFICATION OF MATERIALS	REMARKS
														270		310		0°,B,T,No,No,WA,S @ 269.7'	
																		15°,J,T,No,No,WA,S @ 270.3', 270.9'	
														271		309		0°,B,T,No,No,Pl,S @ 270.4', 271.0', 271.4'	
										271.7								0°,V,N,anhydrite,Fi,Pl,S @ 271.6'	
														272		308		light brownish gray; w/anhydrite veins @ 272.0-272.2'	
																		25°,J,T,anhydrite,Sp,St,SR @ 272.2-272.3'	
														273		307		0°,V,N,anhydrite,Fi,Pl,S @ 273.1',274.4'	
																		10°,V,MW,anhydrite,Fi,Pl,SR @ 273.3'	
																		10°,B,T,No,No,Pl,S @ 273.4'	
														274		306		10°,B,T,anhydrite,Fi,WA,SR @ 273.8'	
PQ	50	5.0	5.0	4.5	100	90												light brownish gray @ 273.8-274.4'	
														275		305		10°,V,N,anhydrite,Fi,Pl,SR @ 275.4'	
																		light brownish gray; w/anhydrite beds; nodules; veins @ 275.6-278.2'	
														276		304		0°,J,VN,No,No,WA,R @ 275.8', 276.4'	
										276.7				277		303		0°,J,N,anhydrite,Sp,Pl,R @ 277.1'	Core box #24 starts @ 277.1'.
														278		302		0°,V,N,anhydrite,Fi,Pl,S @ 278.1'	
PQ	51	5.0	5.0	5.0	100	100								279		301		light brownish gray; w/shale partings; 0.1-2.0" spacing @ 279.1-280.3'	
																		0°,B,T,No,No,Pl,SR @ 279.4',280.4'	
														280		300		0°,V,VN,anhydrite,Fi,WA,S @ 279.5'	
														281		299		black dolomitic shale band @ 281.0-281.2'	
																		0°,V,MW,anhydrite,Fi,Pl,S @ 281.1'	
										281.7								light brownish gray; w/anhydrite nodules @ 281.2-285.0'	
														282		298		0°,V,VN,anhydrite,Fi,Pl,SR @ 281.7', 282.3'	
														283		297		0°,J,VN,anhydrite,Sp,Pl,R @ 282.8'	
																		thin anhydrite bed @ 283.1-283.5'	
PQ	52	5.0	5.0	4.6	100	92								284		296		0°,B,T,No,No,Pl,SR @ 284.1'	
																		90°,V,N,anhydrite,Fi,Pl,R @ 284.2-285.0', 283.4-284.0'	
														285				(2)	

BLACK & VEATCH

BORING LOG

BORING NO. RB-C8

CLIENT	PROJECT	PROJECT NO.
Detroit Edison	Fermi 3 COL Application	147483

PROJECT LOCATION	COORDINATES	GROUND ELEVATION (DATUM)	TOTAL DEPTH
Monroe, MI	N 6110.9' E 4534.4'	580.4 ft (NAVD 88)	471.5 (feet)

SURFACE CONDITIONS	COORDINATE SYSTEM	DATE START	DATE FINISHED
Gravel parking lot near field	Plant	06/13/07	06/28/07

LOGGED BY	CHECKED BY	APPROVED BY
Ohlmacher GEC	Dogbey/Ohlmacher GEO	Meyer EM

SAMPLING							CORING							DEPTH (FEET)	SAMPLE TYPE	ELEVATION (FEET)	GRAPHIC LOG	CLASSIFICATION OF MATERIALS	REMARKS
SAMPLE TYPE	SAMPLE NUMBER	SET 6 INCHES	2ND 6 INCHES	3RD 6 INCHES	N VALUE	SAMPLE RECOVERY	CORE SIZE	RUN NUMBER	RUN LENGTH	RUN RECOVERY	RQD RECOVERY	PERCENT RECOVERY	RQD						
														285		295		grades light gray @ 285.0' 0°,B,T,No,No,Pl,SR @ 285.0' 0°,J,T,No,No,Pl,SR @ 285.2' grades no fossils @ 285.6' 0°,B,T,No,No,Pl,R @ 285.7'	
														286		294		286.0 DOLOMITE; crystalline; light gray; micritic; fresh; strong; hard; massive; w/stylolites & black partings spaced 2-3"; (Salina Group - Unit E).	
			286.7																Core box #25 starts @ 286.7'.
														287		293		90°,V,VN,anhydrite,Pl,SR @ 287.3-287.5', 287.9-288.2'	
														288		292		anhydrite filled fractures; VC @ 287.4-287.9' 0°,B,VN,No,No,Pl,SR @ 287.6' anhydrite nodules @ 288.2-288.5' 0°,J,T,No,No,St,SR @ 288.6'	
PQ	53	5.0	4.9	4.9	98	98								289		291		0°,J,T,No,No,St,SR @ 289.3',289.8'	
														290		290			
														291		289		0°,B,VN,No,No,Pl,SR @ 290.7' 65°,J,VN,anhydrite,Sp,Pl,SR; healed @ 290.7-291.3'	
			291.7											292		288		0°,B,VN,No,No,Pl,SR @ 292.3'	
														293		287		0°,J,VN,No,No,WA,SR @ 292.9', 297.1', 298.7' 0°,B,VN,No,No,Pl,SR @ 293.3',293.8',294.0',294.1'	
PQ	54	5.0	5.0	4.4	100	88								294		286		90°,J,T,No,No,Pl,SR @ 294.0-294.1' 80°,J,T,UK, Sp,Pl,SR; healed @ 294.3-295.0'	
														295		285		10°,J,N,No,No,Pl,SR @ 295.4', 295.6'	
														296		284			
			296.7											297		283			Core box #26 starts @ 296.7'
														298		282		grades dark gray @ 297.7' highly fractured @ 297.8-298.0' 0°,B,VN,No,No,Pl,S @ 298.0' 5% anhydrite nodules up to 1.3" @ 298.3-298.5' highly veined (fractured) w/anhydrite fill, VC @ 298.5-299.8' 15°,J,VN,No,No,Pl,SR @ 298.6'	
PQ	55	5.0	5.0	4.8	100	96								299		281			
														300					

BLACK & VEATCH

BORING LOG

BORING NO. RB-C8

CLIENT	PROJECT	PROJECT NO.
Detroit Edison	Fermi 3 COL Application	147483

PROJECT LOCATION	COORDINATES	GROUND ELEVATION (DATUM)	TOTAL DEPTH
Monroe, MI	N 6110.9' E 4534.4'	580.4 ft (NAVD 88)	471.5 (feet)

SURFACE CONDITIONS	COORDINATE SYSTEM	DATE START	DATE FINISHED
Gravel parking lot near field	Plant	06/13/07	06/28/07

LOGGED BY	CHECKED BY	APPROVED BY
GAO Ohlmacher	GEO Dogbey/Ohlmacher	EM Meyer

SAMPLING: SAMPLE TYPE	SAMPLE NUMBER	SET 6 INCHES	2ND 6 INCHES	3RD 6 INCHES	N VALUE	SAMPLE RECOVERY
CORING: CORE SIZE	RUN NUMBER	RUN LENGTH	RUN RECOVERY	RQD RECOVERY	PERCENT RECOVERY	RQD

DEPTH (FEET)	SAMPLE TYPE	ELEVATION (FEET)	GRAPHIC LOG	CLASSIFICATION OF MATERIALS	REMARKS
300		280		0°,J,VN,No,No,Pl,SR @ 300.1'	
301		279		0°,J,N,No,No,Pl,R @ 301.1'	
302		278		302.6	
303		277		DOLOMITE; dark grayish brown to black; micritic; fresh; strong; hard; banded w/argillaceous dolomite; (Salina Group - Unit E).	
304		276		10°,J,VN,No,No,Pl,SR @ 302.7' black shale bands @ 303.05-303.1' 0°,B,VN,No,No,Pl,S @ 303.4', 305.5', 306.4' contorted bedding @ 303.5-304.9' 0°,B,VN,No,No,Pl,SR @ 304.3', 305.1'	
305		275		grades dark bluish gray @ 305.2' black shale band @ 305.4-305.5' black shale band @ 305.7-305.8'	Core box #27 starts @ 305.1'.
306		274		black shale band @ 306.4'	
307		273		306.7 ANHYDRITE; white to light bluish gray; crystalline; micritic; fresh; very weak; low hardness; thin bedded; w/grayish brown argillaceous dolomite bands; micritic; strong; hard; (Salina Group - Unit E).	
308		272		0°,V,VN,anhydrite,Fi,Pl,SR @ 306.8',306.85' 0°,J,VN,No,No,Pl,SR @ 307.9'	
309		271		308.0 DOLOMITE; crystalline; light brownish gray; micritic; fresh; very strong; hard; massive; (Salina Group - Unit E).	
310		270		0°,V,N,anhydrite,Fi,Pl,SR; healed @ 308.3' 0°,B,VN,anhydrite,Sp,Pl,SR @ 308.9', 309.5', 310.1', 311.1', 311.2', 311.6'	
311		269		0°,J,T,No,No,WA,SR @ 310.4', 314.7'	
312		268		310.7 DOLOMITE; bluish gray; micritic; fresh; strong; hard; banded w/argillaceous dolomite; (Salina Group - Unit E).	
313		267		black shale band @ 311.3-311.4'	
314		266		black shale band @ 312.4-312.5' 0°,J,VN,No,No,Pl,SR @ 312.6',314.1',314.5',314.8' black shale band @ 312.7-312.8'	
315				312.8 ANHYDRITE; white to light bluish gray; crystalline; micritic; fresh; very weak; low hardness; thin bedded; intermingled w/DOLOMITE; argillaceous; grayish brown; micritic; strong; hard; banded; (Salina Group - Unit E). 0°,J,T,No,No,St,SR @ 313.5'	Core box #28

CORING: CORE SIZE	RUN NUMBER	RUN LENGTH	RUN RECOVERY	RQD RECOVERY	PERCENT RECOVERY	RQD
PQ	56	5.0	5.0	5.0	100	100
PQ	57	5.0	5.0	4.6	100	92
PQ	58	5.0	4.9	4.3	98	86

301.7 306.7 311.7

BLACK & VEATCH

BORING LOG

BORING NO. RB-C8

CLIENT	PROJECT	PROJECT NO.
Detroit Edison	Fermi 3 COL Application	147483

PROJECT LOCATION	COORDINATES	GROUND ELEVATION (DATUM)	TOTAL DEPTH
Monroe, MI	N 6110.9' E 4534.4'	580.4 ft (NAVD 88)	471.5 (feet)

SURFACE CONDITIONS	COORDINATE SYSTEM	DATE START	DATE FINISHED
Gravel parking lot near field	Plant	06/13/07	06/28/07

LOGGED BY	CHECKED BY	APPROVED BY
Ohlmacher GCO	Dogbey/Ohlmacher GPO	Meyer EM

SAMPLING							CORING										
SAMPLE TYPE	SAMPLE NUMBER	SET 6 INCHES	2ND 6 INCHES	3RD 6 INCHES	N VALUE	SAMPLE RECOVERY	CORE SIZE	RUN NUMBER	RUN LENGTH	RUN RECOVERY	RQD RECOVERY	PERCENT RECOVERY	RQD	DEPTH (FEET)	SAMPLE TYPE	ELEVATION (FEET)	GRAPHIC LOG

CLASSIFICATION OF MATERIALS	REMARKS
0°,J,VN,No,No,WA,SR @ 315.1' 0°,B,VN,No,No,Pl,SR @ 315.2',315.8'	starts @ 314.8'.
316.7 317.0 DOLOMITE; gray; crystalline; micritic; fresh; strong; hard; massive; (Salina Group - Unit E).	Water level @ 21.8' prior to drilling on 06/21/07.
black shale partings @ 318.1-318.3' 0°,B,VN,No,No,Pl,SR @ 318.2'	
318.3 ANHYDRITE; white to light bluish gray; crystalline; micritic; fresh; very weak; low hardness; thin bedded (up to 3"); intermingled w/DOLOMITE; argillaceous; gray; crystalline; micritic; fresh; strong; hard; (Salina Group - Unit E). 5°,J,VN,No,No,Pl,SR @ 318.5' thin dolomite bed @ 319.5-319.8' highly fractured @ 319.7-319.8' dolomite band @ 320.4-320.6' 10°,J,VN,No,No,St,SR @ 320.7' 0°,J,VN,anhydrite,Pa,WA,SR @ 320.9'	
321.6 DOLOMITE; gray; (Salina Group - Unit E). highly fractured @ 321.8-321.9' 0°,B,VN,No,No,Pl,SR @ 322.1'	
322.3 ANHYDRITE; white to light bluish gray; crystalline; micritic; fresh; very weak; low hardness; thin bedded (up to 3"); intermingled w/DOLOMITE; argillaceous; gray; crystalline; micritic; fresh; strong; hard; (Salina Group - Unit E). 10°,J,T,No,No,Pl,SR @ 323.0' 0°,J,VN,No,No,Pl,SR @ 323.8', 324.6', 329.2', 329.7', 329.8' unknown mineral crystals; very dark grayish brown; up to 0.4" long @ 324.4-324.7'	Core box #29 starts @ 324.7'.
324.7 DOLOMITE; light brownish gray; micritic; fresh; strong; hard; interbedded w/ANHYDRITE; white to light gray; bands; (Salina Group - Unit E). 0°,B,VN,No,No,Pl,SR @ 325.1'	
325.5 DOLOMITE; light brownish gray; crystalline; micritic; fresh; strong; hard; massive; (Salina Group - Unit E).	
326.3 DOLOMITE; gray w/light brownish gray bands; crystalline; micritic; fresh; strong; hard; (Salina Group - Unit E). grading dark gray @ 327.0' 0°,B,VN,No,No,Pl,SR @ 327.0',328.4' intermingled w/anhydrite bands @ 328.9-329.1'	
329.5 ANHYDRITE; white to light bluish gray; crystalline;	

PQ	59	5.0	5.0	4.2	100	84								315		265		
														316		264		
														317		263		
														318		262		
														319		261		
														320		260		
														321		259		
PQ	60	5.0	5.0	4.9	100	98								322		258		
														323		257		
														324		256		
														325		255		
														326		254		
PQ	61	5.0	5.0	4.3	100	86								327		253		
														328		252		
														329		251		
														330				

BLACK & VEATCH

BORING LOG

BORING NO. RB-C8

CLIENT	PROJECT	PROJECT NO.
Detroit Edison	Fermi 3 COL Application	147483

PROJECT LOCATION	COORDINATES	GROUND ELEVATION (DATUM)	TOTAL DEPTH
Monroe, MI	N 6110.9' E 4534.4'	580.4 ft (NAVD 88)	471.5 (feet)

SURFACE CONDITIONS	COORDINATE SYSTEM	DATE START	DATE FINISHED
Gravel parking lot near field	Plant	06/13/07	06/28/07

LOGGED BY	CHECKED BY	APPROVED BY
Ohlmacher GCO	Dogbey/Ohlmacher GCO	Meyer EM

SAMPLING							CORING										CLASSIFICATION OF MATERIALS	REMARKS
SAMPLE TYPE	SAMPLE NUMBER	SET 6 INCHES	2ND 6 INCHES	3RD 6 INCHES	N VALUE	SAMPLE RECOVERY	CORE SIZE	RUN NUMBER	RUN LENGTH	RUN RECOVERY	RQD RECOVERY	PERCENT RECOVERY	RQD	DEPTH (FEET)	SAMPLE TYPE	ELEVATION (FEET)	GRAPHIC LOG	
														330		250		micritic; fresh; strong; low hardness; thin bedded; interbedded w/DOLOMITE; banded dark gray to light brownish gray; crystalline; micritic; fresh; strong; hard; (Salina Group - Unit C). 0°,J,VN,No,No,Pl,SR @ 330.5' 0°,J,N,No,No,Pl,R @ 331.4', 334.4', 332.3'	
										331.7				331		249			
														332		248		dolomite beds grade clastic; micritic to very coarse grained; composed of several fining upward sequences @ 331.8' dolomite beds grade crystalline; micritic @ 332.7'	Water level @ 22.4' prior to drilling on 06/25/07.
														333		247		333.3 DOLOMITE; argillaceous; very dark greenish gray; micritic; fresh; strong; hard; massive; slightly mottled color; (Salina Group - Unit C).	Core box #30 starts @ 333.0'.
PQ	62	5.0	5.0	5.0	100	100								334		246		anhydrite band @ 334.4-334.5'	
														335		245		0°,V,N,anhydrite,Fi,Pl,SR; healed @ 335.0', 344.0' grades dark bluish gray @ 335.2'	
														336		244		anhydrite nodules; <0.1" @ 336.4'	
										336.7				337		243		very dark bluish gray shale band @ 336.8' 0°,J,VN,Cl,Pa,Pl,SR @ 336.9' 337.0 DOLOMITE; dark bluish gray; crystalline; micritic; fresh; strong; hard; massive; w/anhydrite nodules; (Salina Group - Unit C).	
														338		242			
PQ	63	5.0	5.0	4.8	100	96								339		241		0°,J,T,No,No,Pl,SR @ 338.7'	
														340		240		0°,J,N,anhydrite,Pa,Pl,SR @ 340.0'	
														341		239		0°,J,T,No,No,Pl,SR @ 341.0',341.1'	
										341.7				342		238		0°,J,VN,No,No,Pl,SR @ 341.9', 342.0' grades dark greenish gray @ 341.9' 80°,J,T,No,No,Pl,SR @ 342.0-342.6'	Core box #31 starts @ 341.7'.
														343		237		grades greenish gray @ 342.8-343.1'	
PQ	64	5.0	4.9	4.6	98	92								344		236			
														345					

BLACK & VEATCH

BORING LOG

BORING NO. RB-C8

CLIENT	PROJECT	PROJECT NO.
Detroit Edison	Fermi 3 COL Application	147483

PROJECT LOCATION	COORDINATES	GROUND ELEVATION (DATUM)	TOTAL DEPTH
Monroe, MI	N 6110.9' E 4534.4'	580.4 ft (NAVD 88)	471.5 (feet)

SURFACE CONDITIONS	COORDINATE SYSTEM	DATE START	DATE FINISHED
Gravel parking lot near field	Plant	06/13/07	06/28/07

LOGGED BY	CHECKED BY	APPROVED BY
Ohlmacher GEO	Dogbey/Ohlmacher GEO	Meyer

SAMPLING: SAMPLE TYPE	SAMPLE NUMBER	SET 6 INCHES	2ND 6 INCHES	3RD 6 INCHES	N VALUE	SAMPLE RECOVERY	CORING: CORE SIZE	RUN NUMBER	RUN LENGTH	RUN RECOVERY	RQD RECOVERY	PERCENT RECOVERY	RQD	DEPTH (FEET)	SAMPLE TYPE	ELEVATION (FEET)	GRAPHIC LOG	CLASSIFICATION OF MATERIALS	REMARKS
														345		235		345.0 DOLOMITE; greenish gray; crystalline; micritic; fresh; strong; hard; banded w/DOLOMITE; argillaceous; dark bluish gray; (Salina Group - Unit C). 0°,J,VN,No,No,Pl,R @ 345.4',347.8' 0°,J,N,anhydrite,Pa,Pl,SR @ 346.1' anhydrite nodules up to 0.7"; white to weak red @ 346.2-346.3' 10°,J,N,anhydrite,Pa,Pl,SR @ 346.4' 80°,J,T,No,No,Pl,SR @ 347.2-347.6'	
														346		234			
			346.7											347		233			
														348		232			
PQ	65	5.0	5.0	4.7	100	94								349		231		anhydrite band; white to weak red @ 348.7-348.8' 0°,J,N,No,No,Pl,R @ 348.7' 348.9 ANHYDRITE; white to weak red; intermingled w/ dolomite 349.5 DOLOMITE; greenish gray; crystalline; micritic; fresh; strong; hard; banded w/DOLOMITE; argillaceous; dark bluish gray; (Salina Group - Unit C). 90°,J,T,No,No,Pl,SR @ 349.5-350.6' anhydrite nodules @ 349.7-349.9'	
														350		230			
														351		229		350.0 DOLOMITE; very dark greenish gray; crystalline; micritic; fresh; strong; hard; massive; (Salina Group - Unit C). 90°,J,W,dolomite & argillaceous dolomite clasts in anhydrite,Fi,Pl,R; healed @ 351.0-352.6'	Core box #32 starts @ 351.1'.
			351.7											352		228			
														353		227		352.0 DOLOMITE; gray; crystalline; micritic; fresh; strong; hard; banded w/DOLOMITE; argillaceous; dark greenish gray; (Salina Group - Unit C). 0°,V,MW,anhydrite,Fi,Pl,SR; healed @ 352.6' 70°,V,N,anhydrite,Fi,Pl,SR; healed @ 353.3' 0°,V,W, anhydrite,Fi,Pl,SR; healed @ 353.3' 90°,V,MW,anhydrite,Fi,Pl,SR; healed @ 353.7-354.1' anhydrite nodules up to 0.5" @ 354.1-354.2'	
PQ	66	5.0	5.0	5.0	100	100								354		226			
														355		225		354.5 DOLOMITE; very dark greenish gray; crystalline; micritic; fresh; strong; hard; massive; (Salina Group - Unit C). 15°,J,VN,No,No,Pl,SR @ 354.7', 356.6' 0°,J,VN,No,No,Pl,R @ 356.2' 0°,V,MW,anhydrite,Fi,Pl,SR; healed @ 356.5', 356.7', 357.1'	
														356		224			
			356.7											357		223		356.7 DOLOMITE; gray; crystalline; micritic; fresh; strong; hard; banded w/very dark gray argillaceous dolomite; (Salina Group - Unit C).	
														358		222		357.6 DOLOMITE; very dark greenish gray; crystalline; micritic; fresh; strong; hard; massive (Salina Group - Unit C). 0°,J,VN,No,No,Pl,R @ 357.8' 25°,V,MW,anhydrite,Fi,Pl,SR; healed @ 358.1-358.2'	
PQ	67	5.0	5.0	4.9	100	98								359		221			
														360				358.3	

BLACK & VEATCH

BORING LOG

BORING NO. RB-C8

CLIENT	PROJECT	PROJECT NO.
Detroit Edison	Fermi 3 COL Application	147483

PROJECT LOCATION	COORDINATES	GROUND ELEVATION (DATUM)	TOTAL DEPTH
Monroe, MI	N 6110.9' E 4534.4'	580.4 ft (NAVD 88)	471.5 (feet)

SURFACE CONDITIONS	COORDINATE SYSTEM	DATE START	DATE FINISHED
Gravel parking lot near field	Plant	06/13/07	06/28/07

LOGGED BY	CHECKED BY	APPROVED BY
Ohlmacher GCO	Dogbey/Ohlmacher GCO	Meyer EM

SAMPLING							CORING									
SAMPLE TYPE	SAMPLE NUMBER	SET 6 INCHES	2ND 6 INCHES	3RD 6 INCHES	N VALUE	SAMPLE RECOVERY	CORE SIZE	RUN NUMBER	RUN LENGTH	RUN RECOVERY	RQD RECOVERY	PERCENT RECOVERY	RQD	DEPTH (FEET)	SAMPLE TYPE	ELEVATION (FEET)	GRAPHIC LOG	CLASSIFICATION OF MATERIALS	REMARKS
														360		220		DOLOMITE; gray; crystalline; micritic; fresh; strong; hard; banded w/very dark greenish gray argillaceous dolomite; (Salina Group - Unit C).	Core box #33 starts @ 360.1'.
														361		219		358.8 DOLOMITE; very dark greenish gray; crystalline; micritic; fresh; strong; hard; massive; (Salina Group - Unit C). anhydrite band @ 359.0-359.1' anhydrite band @ 359.4-359.5' 0°,J,VN,No,No,Pl,R @ 359.7' anhydrite nodules up to 0.5" @ 360.0-360.1' reddish gray dolomite @ 360.1-360.2' anhydrite band @ 360.2' 10°,V,MW,anhydrite,Fi,Pl,SR; healed @ 360.3-360.4'	
			361.7											362		218		362.2 DOLOMITE; reddish gray; crystalline; micritic; fresh; strong; hard; banded w/argillaceous dolomite; very dark greenish gray; (Salina Group - Unit C). 0°,J,VN,No,No,St,SR @ 362.5-362.6'	
PQ	68	5.0	5.0	4.9	100	98								363		217		362.7 DOLOMITE; dark greenish gray; crystalline; micritic; fresh; strong; hard; massive; w/anhydrite bands; (Salina Group - Unit C). 10°,J,VN,No,No,Pl,SR @ 363.3', 364.8' anhydrite nodules @ 363.6-363.7', 363.8-364.4'	
														364		216		364.3 DOLOMITE; reddish gray; crystalline; micritic; fresh; strong; hard; banded w/argillaceous dolomite; very dark greenish gray; (Salina Group - Unit C). 0°,V,MW,anhydrite,Fi,Pl,SR; healed @ 364.5', 365.3', 366.3' thin white to weak red anhydrite bed @ 364.8-365.1'	
														365		215		365.2 DOLOMITE; dark greenish gray; crystalline; micritic; fresh; strong; hard; massive; (Salina Group - Unit C). thin reddish gray dolomite bed @ 365.5-365.8' reddish gray dolomite band @ 366.0-366.2'	
			366.7											366		214		366.3 40°,V,N,anhydrite,Fi,Pl,SR; healed @ 366.3-366.4' ANHYDRITE; intermingled w/dolomite; (Salina Group - Unit C). 0°,J,VN,No,No,Pl,SR @ 366.8'	Core box #34 starts @ 369.8'.
PQ	69	5.0	5.0	5.0	100	100								367		213		367.4 DOLOMITE; dark greenish gray; crystalline; micritic; fresh; strong; hard; massive; (Salina Group - Unit C). 20°,V,N,anhydrite,Fi,Pl,SR; healed @ 367.4-367.5' 0°,J,VN,No,No,Pl,R @ 367.4', 371.0' 30°,V,N,anhydrite,Fi,Pl,SR; healed @ 367.7-367.8'	
														368		212		368.0 DOLOMITE; reddish gray; crystalline; micritic; fresh; strong; hard; banded w/argillaceous dolomite; dark greenish gray & anhydrite beds; (Salina Group - Unit C).	
														369		211		369.0 DOLOMITE; dark greenish gray; crystalline; micritic; fresh; strong; hard; massive; (Salina Group - Unit C).	
			371.7											370		210		369.5 DOLOMITE; reddish gray; crystalline; micritic; fresh; strong; hard; massive; alternating w/DOLOMITE;	
														371		209			
														372		208			
														373		207			
PQ	70	5.0	5.0	4.8	100	96								374		206			
														375					

BLACK & VEATCH

BORING LOG

BORING NO. RB-C8

CLIENT	PROJECT	PROJECT NO.
Detroit Edison	Fermi 3 COL Application	147483

PROJECT LOCATION	COORDINATES	GROUND ELEVATION (DATUM)	TOTAL DEPTH
Monroe, MI	N 6110.9' E 4534.4'	580.4 ft (NAVD 88)	471.5 (feet)

SURFACE CONDITIONS	COORDINATE SYSTEM	DATE START	DATE FINISHED
Gravel parking lot near field	Plant	06/13/07	06/28/07

LOGGED BY	CHECKED BY	APPROVED BY
Ohlmacher GCO	Dogbey/Ohlmacher GCO	Meyer SM

SAMPLING: SAMPLE TYPE	SAMPLE NUMBER	SET 6 INCHES	2ND 6 INCHES	3RD 6 INCHES	N VALUE	SAMPLE RECOVERY

CORING: CORE SIZE	RUN NUMBER	RUN LENGTH	RUN RECOVERY	RQD RECOVERY	PERCENT RECOVERY	RQD
PQ	71	5.0	5.0	5.0	100	100
PQ	72	5.0	4.9	4.8	98	96
PQ	73	5.0	5.0	5.0	100	100

DEPTH (FEET)	SAMPLE TYPE	ELEVATION (FEET)	GRAPHIC LOG	CLASSIFICATION OF MATERIALS	REMARKS
375		205		crystalline; dark greenish gray; micritic; fresh; strong; hard; (Salina Group - Unit C). 10°,J,N,anhydrite,Fi,Pl,R @ 369.7' 90°,J,T,anhydrite,Sp,Pl,SR @ 370.0-370.8' 80°,V,N,anhydrite,Fi,Pl,SR; healed @ 370.5-370.8', 371.2-371.4'	
376		204		sand & gravel sized clasts of dolomite in fining upward sequences; indurated @ 370.8-371.1' 90°,V,N,anhydrite,Fi,Pl,R; healed @ 371.5-372.5', 372.8-374.2' highly fractured @ 371.7-371.8' 25°,V,N,anhydrite,Fi,Pl,SR; healed @ 372.3-372.4' 20°,V,N,anhydrite,Fi,Pl,SR; healed @ 372.4-372.5'	
377		203		372.5 DOLOMITE; grayish brown; crystalline; micritic; fresh; strong; hard; banded w/anhydrite; white to weak red; (Salina Group - Unit C).	Core box #35 starts @ 378.6'.
378		202		373.0 DOLOMITE; reddish gray; crystalline; micritic; fresh; strong; hard; banded w/argillaceous dolomite; dark bluish gray; (Salina Group - Unit C). 0°,J,VN,No,No,Pl,SR @ 373.9 0°,V,N,anhydrite,Fi,St,SR; healed @ 374.3-374.4'	
379		201		374.5 DOLOMITE; grayish brown to light brownish gray; crystalline; micritic; fresh; strong; hard; banded w/ anhydrite; (Salina Group - Unit C). anhydrite band @ 374.7-374.9' 0°,J,VN,No,No,Pl,R @ 375.6'	
380		200		375.8 DOLOMITE; very dark gray; crystalline; micritic; fresh; strong; hard; massive; (Salina Group - Unit C). 90°,V,N,anhydrite,Fi,WA,SR; healed @ 376.2-377.4' anhydrite nodules up to 1.5" length @ 376.2-376.7' 0°,J,VN,No,No,Pl,R @ 377.1',377.8',378.6',381.2', 388.0' anhydrite band @ 377.4-377.8' brownish gray; banded @ 378.6-378.9' 10°,V,N,anhydrite,Fi,Pl,SR; healed @ 379.2' 0°,V,N,anhydrite,Fi,Pl,SR; healed @ 379.5', 387.2' anhydrite nodules @ 380.0-380.3' anhydrite nodules @ 380.5-380.6' anhydrite band @ 381.0-381.1'	Water level @ 22.1' prior to drilling on 06/26/07.
381		199		381.6 DOLOMITE; dark greenish gray; crystalline; micritic; fresh; strong; moderately hard; banded w/zones of anhydrite nodules spaced 0.3' apart; zone thickness 0.1'; nodule size up to 3" long; (Salina Group - Unit C). 0°,J,VN,No,No,Pl,SR @ 381.6' 15°,V,N,anhydrite,Fi,Pl,SR; healed @ 381.9' 55°,V,N,anhydrite,Fi,Pl,SR; healed @ 384.0-384.4', 385.0-385.3' anhydrite band @ 386.9-387.1' 90°,J,T,No,No,Pl,SR @ 387.1-387.5', 389.1-389.7'	
382		198		387.6 DOLOMITE; pale brown; crystalline; micritic; fresh; strong; moderately hard; banded w/anhydrite; white to very dark gray; (Salina Group - Unit C).	
383		197		388.5	
384		196			
385		195			
386		194			
387		193			Core box #36 starts @ 388.0'.
388		192			
389		191			
390					

BLACK & VEATCH

BORING LOG

BORING NO. RB-C8

CLIENT	PROJECT	PROJECT NO.
Detroit Edison	Fermi 3 COL Application	147483

PROJECT LOCATION	COORDINATES	GROUND ELEVATION (DATUM)	TOTAL DEPTH
Monroe, MI	N 6110.9' E 4534.4'	580.4 ft (NAVD 88)	471.5 (feet)

SURFACE CONDITIONS	COORDINATE SYSTEM	DATE START	DATE FINISHED
Gravel parking lot near field	Plant	06/13/07	06/28/07

LOGGED BY	CHECKED BY	APPROVED BY
Ohlmacher GCO	Dogbey/Ohlmacher GCO	Meyer SM

SAMPLING							CORING									
SAMPLE TYPE	SAMPLE NUMBER	SET 6 INCHES	2ND 6 INCHES	3RD 6 INCHES	N VALUE	SAMPLE RECOVERY	CORE SIZE	RUN NUMBER	RUN LENGTH	RUN RECOVERY	RQD RECOVERY	PERCENT RECOVERY	RQD	DEPTH (FEET)	SAMPLE TYPE	ELEVATION (FEET)

GRAPHIC LOG	CLASSIFICATION OF MATERIALS	REMARKS
	DOLOMITE; dark greenish gray; crystalline; micritic; fresh; strong; hard; banded w/anhydrite; white to very dark gray; (Salina Group - Unit C). 90°,V,N,anhydrite,Fi,Pl,SR; healed @ 389.4-389.7'	
	389.5 DOLOMITE; banded grayish brown, dark bluish gray & brown; crystalline; micritic; fresh; strong; hard; (Salina Group - Unit C). 0°,V,N,anhydrite,Fi,Pl,SR; healed @ 390.1' 0°,J,VN,No,No,Pl,SR @ 390.3'	
	391.5 DOLOMITE; dark greenish gray; crystalline; micritic; fresh; strong; moderately hard; banded; anhydrite nodules; (Salina Group - Unit C). 0°,V,N,anhydrite,Fi,WA,SR; healed @ 392.6' brownish gray; banded w/anhydrite @ 392.7-393.0' 0°,B,T,No,No,Pl,S @ 392.9' anhydrite band @ 393.3-393.4', 394.7-394.8' 0°,J,VN,No,No,Pl,SR @ 394.7',395.8' 0°,V,MW,anhydrite,Fi,Pl,SR; healed @ 394.9'	
	395.4 ANHYDRITE; intermingled w/DOLOMITE; (Salina Group - Unit C).	
	396.0 DOLOMITE; dark greenish gray; crystalline; micritic; fresh; strong; moderately hard; banded; anhydrite nodules; (Salina Group - Unit C).	
	396.7 DOLOMITE; banded dark bluish gray & brown; crystalline; micritic; fresh; strong; hard; anhydrite band near upper & lower contacts; (Salina Group - Unit C).	Core box #37 starts @ 397.8'.
	397.5 DOLOMITE; banded dark bluish gray & dark greenish gray; crystalline; micritic; fresh; strong; hard; anhydrite nodules; dark bluish gray shale partings; (Salina Group - Unit C). 0°,J,VN,No,No,Pl,SR @ 397.6' 0°,V,MW,anhydrite,Fi,Pl,SR; healed @ 398.7' 0°,J,VN,No,No,Pl,SR @ 398.8'	
	399.0 DOLOMITE; banded brown & dark bluish gray; crystalline; micritic; fresh; strong; hard; anhydrite bands near upper & lower contacts; (Salina Group - Unit C). 90°,V,W,anhydrite & dolomite,Fi,Pl,R; healed @ 399.8-401.1' 0°,J,VN,No,No,Pl,SR @ 399.9'	
	400.0 DOLOMITE; banded dark bluish gray & dark greenish gray; crystalline; micritic; fresh; strong; hard; (Salina Group - Unit C). brown dolomite @ 401.8-401.9' 0°,J,VN,No,No,Pl,SR @ 402.5' 30°,V,N,anhydrite,Fi,Pl,SR @ 403.5-403.7' 0°,J,W,Cl,Pa,WA,R @ 403.5'	

SAMPLE TYPE	SAMPLE NUMBER	SET 6 INCHES	2ND 6 INCHES	3RD 6 INCHES	N VALUE	SAMPLE RECOVERY	CORE SIZE	RUN NUMBER	RUN LENGTH	RUN RECOVERY	RQD RECOVERY	PERCENT RECOVERY	RQD
										391.7			
PQ	74	5.0	5.0	5.0	100	100							
										396.7			
PQ	75	5.0	4.8	4.7	96	94							
										401.7			
PQ	76	5.0	5.0	5.0	100	100							

DEPTH (FEET)	ELEVATION (FEET)
390	190
391	189
392	188
393	187
394	186
395	185
396	184
397	183
398	182
399	181
400	180
401	179
402	178
403	177
404	176
405	

BLACK & VEATCH **BORING LOG**

BORING NO. RB-C8
SHEET 28 OF 32

CLIENT	PROJECT	PROJECT NO.
Detroit Edison	Fermi 3 COL Application	147483

PROJECT LOCATION	COORDINATES	GROUND ELEVATION (DATUM)	TOTAL DEPTH
Monroe, MI	N 6110.9' E 4534.4'	580.4 ft (NAVD 88)	471.5 (feet)

SURFACE CONDITIONS	COORDINATE SYSTEM	DATE START	DATE FINISHED
Gravel parking lot near field	Plant	06/13/07	06/28/07

LOGGED BY	CHECKED BY	APPROVED BY
Ohlmacher GCO	Dogbey/Ohlmacher GCO	Meyer EM

SAMPLING: SAMPLE TYPE	SAMPLE NUMBER	SET 6 INCHES	2ND 6 INCHES	3RD 6 INCHES	N VALUE	SAMPLE RECOVERY
CORING: CORE SIZE	RUN NUMBER	RUN LENGTH	RUN RECOVERY	RQD RECOVERY	PERCENT RECOVERY	RQD
PQ	77	5.0	5.0	4.9	100	98
PQ	78	5.0	5.0	5.0	100	100
PQ	79	5.0	5.0	5.0	100	100

DEPTH (FEET)	ELEVATION (FEET)	SAMPLE TYPE	GRAPHIC LOG	CLASSIFICATION OF MATERIALS	REMARKS
405	175			black shale partings interbedded w/dolomite @ 405.1-405.2'	
406	174				Core box #38 starts @ 406.4'.
406.7					
407	173			90°,J,T,No,No,Pl,SR @ 407.4-407.8' 0°,J,VN,No,No,Pl,SR @ 407.4',408.4',410.0' 60°,J,T,No,No,Pl,SR @ 407.4-407.6'	
408	172			anhydrite intermingled w/brown dolomite @ 408.2-408.4'	
409	171			0°,V,N,anhydrite,Fi,Pl,SR @ 409.2' anhydrite intermingled w/brown dolomite @ 409.3-409.6'	
410	170			410.0 DOLOMITE; brown; crystalline; micritic; fresh; strong; hard; banded; 4" anhydrite bed; (Salina Group - Unit C). 0°,V,N,anhydrite,Fi,Pl,SR @ 410.1' 0°,J,VN,No,No,Pl,SR @ 410.9'(2 joints), 411.9'(2 joints)	
411	169			411.0 DOLOMITE; dark greenish gray; crystalline; micritic; strong; hard; banded; w/some dark greenish gray shale partings; (Salina Group - Unit C).	
411.7					
412	168			411.5 DOLOMITE; brown & bluish gray; crystalline; micritic; fresh; strong; hard; banded; w/anhydrite intermingled w/brown dolomite beds near upper & lower contacts; (Salina Group - Unit C). 45°,J,T,No,No,Pl,SR @ 412.9-413.1' anhydrite nodules @ 413.1-413.4'	
413	167				
414	166			413.5 DOLOMITE; dark greenish gray; crystalline; micritic; fresh; strong; hard; banded w/dark greenish gray argillaceous dolomite; (Salina Group - Unit C). anhydrite nodules @ 414.8-415.0'	
415	165				Core box #39 starts @ 415.2'.
416	164			anhydrite nodules @ 415.9-416.1'	
416.7					
417	163			anhydrite nodules @ 416.6-416.8' anhydrite nodules @ 417.0-417.1'	
418	162			anhydrite nodules @ 417.8-418.0' anhydrite nodules @ 418.2-418.6'	
419	161				
420				anhydrite intermingled w/dark greenish gray dolomite @ 419.5-419.8'	

BLACK & VEATCH

BORING LOG

BORING NO. RB-C8

CLIENT	PROJECT	PROJECT NO.
Detroit Edison	Fermi 3 COL Application	147483

PROJECT LOCATION	COORDINATES	GROUND ELEVATION (DATUM)	TOTAL DEPTH
Monroe, MI	N 6110.9' E 4534.4'	580.4 ft (NAVD 88)	471.5 (feet)

SURFACE CONDITIONS	COORDINATE SYSTEM	DATE START	DATE FINISHED
Gravel parking lot near field	Plant	06/13/07	06/28/07

LOGGED BY	CHECKED BY	APPROVED BY
Ohlmacher GCO	Em for Dogbey/Ohlmacher GCO	Meyer Em

SAMPLING: SAMPLE TYPE	SAMPLE NUMBER	SET 6 INCHES	2ND 6 INCHES	3RD 6 INCHES	N VALUE	SAMPLE RECOVERY	CORING: CORE SIZE	RUN NUMBER	RUN LENGTH	RUN RECOVERY	RQD RECOVERY	PERCENT RECOVERY	RQD	DEPTH (FEET)	ELEVATION (FEET)	CLASSIFICATION OF MATERIALS	REMARKS
														420	160	0°,J,VN,No,No,PI,SR @ 419.5' 0°,V,N,anhydrite,Fi,PI,SR @ 419.8'	
																420.0 DOLOMITE; banded dark brown & brown; crystalline; micritic; fresh; strong; hard; intermingled anhydrite & dolomite beds @ upper & lower contacts; (Salina Group - Unit C). 0°,V,N,anhydrite,Fi,PI,SR; healed @ 420.1'	
														421	159		
			421.7											422	158	421.0 DOLOMITE; dark greenish gray; micritic; strong; hard; banded; (Salina Group - Unit C). 0°,V,MW,anhydrite,Fi,PI,SR; healed @ 421.6' anhydrite nodules @ 422.1-422.2', 422.3-422.4'	
														423	157	422.8	
PQ	80	5.0	5.0	4.9	100	98								424	156	DOLOMITE; intermingled w/ANHYDRITE; brown, white & dark greenish gray; micritic; fresh; strong; hard; banded; (Salina Group - Unit B). 20°,J,VN,No,No,PI,SR @ 423.4-423.5' 0°,J,VN,No,No,PI,SR @ 424.4'	Core box #40 starts @ 423.5'.
														425	155	425.0 ANHYDRITE; w/DOLOMITE; white & brown; micritic; fresh; strong; low hardness; thin bedded; (Salina Group - Unit B).	
														426	154	426.3	
			426.7											427	153	DOLOMITE; dark brown; crystalline; micritic; fresh; strong; hard; banded w/shale partings; (Salina Group - Unit B).	Water level @ 21.9' prior to drilling on 06/27/07.
														428	152	gray @ 428.0-428.3' anhydrite nodules @ 428.3-428.7'	
PQ	81	5.0	5.0	5.0	100	100								429	151	thin argillaceous dolomite bed; pale brown @ 428.7-429.1'	
														430	150	contorted bedding @ 429.9-430.6'	
																430.5 DOLOMITE; argillaceous; banded greenish black to dark greenish gray; micritic; fresh; strong; hard; shale partings; (Salina Group - Unit B). 0°,V,N,anhydrite,Fi,PI,SR; healed @ 431.3'	
														431	149		
			431.7											432	148	dark greenish gray to very dark greenish gray mottled @ 431.8-432.8' anhydrite nodule @ 431.8-431.9'	
														433	147	10°,V,N,anhydrite,Fi,PI,SR; healed @ 432.8' 0°,V,N,anhydrite,Fi,PI,SR; healed @ 433.0', 435.6'	Core box #41 starts @ 432.8'.
														434	146	20°,V,N,anhydrite,Fi,WA,SR; healed @ 433.5' anhydrite nodules @ 433.8'	
PQ	82	5.0	5.0	5.0	100	100								435		interbedded greenish black & brown @ 434.7-434.9'	

BLACK & VEATCH

BORING LOG

BORING NO. RB-C8

CLIENT	PROJECT	PROJECT NO.
Detroit Edison	Fermi 3 COL Application	147483

PROJECT LOCATION	COORDINATES	GROUND ELEVATION (DATUM)	TOTAL DEPTH
Monroe, MI	N 6110.9' E 4534.4'	580.4 ft (NAVD 88)	471.5 (feet)

SURFACE CONDITIONS	COORDINATE SYSTEM	DATE START	DATE FINISHED
Gravel parking lot near field	Plant	06/13/07	06/28/07

LOGGED BY	CHECKED BY	APPROVED BY
Ohlmacher GCO	Dogbey/Ohlmacher GCO	Meyer EM

SAMPLING							CORING							DEPTH (FEET)	SAMPLE TYPE	ELEVATION (FEET)	GRAPHIC LOG	CLASSIFICATION OF MATERIALS	REMARKS
SAMPLE TYPE	SAMPLE NUMBER	SET 6 INCHES	2ND 6 INCHES	3RD 6 INCHES	N VALUE	SAMPLE RECOVERY	CORE SIZE	RUN NUMBER	RUN LENGTH	RUN RECOVERY	RQD RECOVERY	PERCENT RECOVERY	RQD						
														435		145		DOLOMITE; brown; micritic; fresh; strong; hard; banded; intermingled w/ANHYDRITE; white to very dark gray; (Salina Group - Unit B).	
														436		144		0°,J,VN,No,No,Pl,SR @ 435.5',436.3'	
																		436.5	
			436.7											437		143		DOLOMITE; dark greenish gray to very dark gray mottled; crystalline; micritic; fresh; strong; hard; (Salina Group - Unit B). anhydrite nodules @ 437.2-437.8'	
																		437.3	
														438		142		DOLOMITE; banded dark greenish gray to very dark gray; crystalline; micritic; fresh; strong; hard; w/shale partings; (Salina Group - Unit B). 0°,V,MW,anhydrite,Fi,Pl,SR; healed @ 438.0' anhydrite nodules @ 438.3-438.5' 0°,V,N,anhydrite,Fi,WA,SR; healed @ 438.4', 438.6', 439.3' anhydrite band @ 438.9-439.1' contorted bedding @ 439.1-439.5' anhydrite nodules @ 439.2-439.5' anhydrite band @ 439.5-439.6' 0°,J,VN,No,No,Pl,SR @ 439.7' anhydrite nodules @ 439.9-440.3' 15°,J,VN,No,No,Pl,SR @ 440.2'	
PQ	83	5.0	5.0	4.9	100	98								439		141			
														440		140			
														441		139			
																		440.3	
			441.7											442		138		DOLOMITE; light brownish gray; crystalline; intermingled w/ANHYDRITE; white to gray; micritic; fresh; strong; hard; banded; (Salina Group - Unit B).	Core box #42 starts @ 441.7'.
																		441.3	
														443		137		DOLOMITE; dark greenish gray; crystalline; micritic; fresh; strong; hard; banded; w/greenish gray shale partings; (Salina Group - Unit B). contorted bedding @ 442.0-442.6' anhydrite nodule; 3"+ in length @ 442.2-442.4' 0°,J,VN,No,No,Pl,SR @ 443.1' anhydrite band @ 443.2-443.3'	
PQ	84	5.0	5.0	5.0	100	100								444		136			
																		443.5	
														445		135		DOLOMITE; banded brown to light brownish gray; crystalline; micritic; fresh; strong; hard; w/shale partings; (Salina Group - Unit B). 0°,J,VN,No,No,Pl,SR @ 444.1',446.2' anhydrite nodules @ 444.6-444.8' intermingled anhydrite & dolomite @ 444.9-445.2'	
														446		134			
			446.7											447		133		bands up to 3.5" thick; anhydrite; brown; & crystalline dolomite; brown @ 446.5-447.2' grades light brownish gray @ 447.2' 0°,B,VN,No,No,Pl,S @ 447.6', 448.4', 449.0', 449.9'	
														448		132			
														449		131			
PQ	85	5.0	4.8	4.0	96	80								450				stylolites @ 449.5-449.6'	

BLACK & VEATCH

BORING LOG

BORING NO. RB-C8

CLIENT	PROJECT	PROJECT NO.
Detroit Edison	Fermi 3 COL Application	147483

PROJECT LOCATION	COORDINATES	GROUND ELEVATION (DATUM)	TOTAL DEPTH
Monroe, MI	N 6110.9' E 4534.4'	580.4 ft (NAVD 88)	471.5 (feet)

SURFACE CONDITIONS	COORDINATE SYSTEM	DATE START	DATE FINISHED
Gravel parking lot near field	Plant	06/13/07	06/28/07

LOGGED BY	CHECKED BY	APPROVED BY
Ohlmacher GCO	Dogbey/Ohlmacher GCO	Meyer EM

SAMPLING: SAMPLE TYPE	SAMPLE NUMBER	SET 6 INCHES	2ND 6 INCHES	3RD 6 INCHES	N VALUE	SAMPLE RECOVERY

CORING: CORE SIZE	RUN NUMBER	RUN LENGTH	RUN RECOVERY	RQD RECOVERY	PERCENT RECOVERY	RQD
PQ	86	5.0	5.0	4.7	100	94
PQ	87	5.0	5.0	4.5	100	90
PQ	88	5.0	5.0	4.6	100	92

DEPTH (FEET)	SAMPLE TYPE	ELEVATION (FEET)	GRAPHIC LOG	CLASSIFICATION OF MATERIALS	REMARKS
450		130		450.0 DOLOMITE; banded dark greenish gray to light olive gray; crystalline; micritic; fresh; strong; hard; w/shale partings; (Salina Group - Unit B). 0°,B,VN,No,No,PI,SR @ 451.1',451.4' grades mottled light olive gray & light brownish gray @ 451.2'	
451		129			Core box #43 starts @ 451.1'.
452		128		451.5 DOLOMITE; banded pale brown, gray & dark brown; crystalline; micritic; fresh; strong; hard; w/shale partings; (Salina Group - Unit B). 0°,B,VN,No,No,PI,SR @ 452.5',453.8' anhydrite band 0.3" thick @ 452.7' anhydrite intermixed w/brown dolomite @ 452.8-453.2'	
453		127			
454		126			
455		125		0°,B,VN,No,No,PI,SR @ 454.8'	
456		124		0°,B,VN,No,No,PI,SR @ 455.6' anhydrite bands 0.3" thick interbedded w/brown dolomite @ 456.3-456.8' 10°,J,VN,No,No,WA,SR @ 456.6'	
457		123			
458		122		0°,B,VN,No,No,PI,SR @ 457.7'	
459		121		grades dark gray @ 458.7'	
460		120			Core box #44 starts @ 459.8'.
461		119		convoluted bedding; shale partings increasing @ 460.6-461.1' 0°,B,VN,No,No,PI,SR @ 461.2'	
462		118		461.3 DOLOMITE; dark brown; crystalline; micritic; fresh; strong; hard; massive; w/brown crystalline dolomite clasts; & shale partings; (Salina Group - Unit B). 0°,B,VN,No,No,PI,SR @ 461.5'	
463		117		461.8 DOLOMITE; dark gray; crystalline; micritic; fresh; strong; hard; banded; & shale partings; (Salina Group - Unit B). anhydrite; intermingled w/brown dolomite @ 462.4-462.6' 0°,J,VN,No,No,PI,SR @ 462.7'	
464		116		462.8 DOLOMITE; banded dark brown, brown & gray;	
465					

BLACK & VEATCH

BORING LOG

BORING NO. RB-C8
SHEET 32 OF 32

CLIENT	PROJECT	PROJECT NO.
Detroit Edison	Fermi 3 COL Application	147483

PROJECT LOCATION	COORDINATES	GROUND ELEVATION (DATUM)	TOTAL DEPTH
Monroe, MI	N 6110.9' E 4534.4'	580.4 ft (NAVD 88)	471.5 (feet)

SURFACE CONDITIONS	COORDINATE SYSTEM	DATE START	DATE FINISHED
Gravel parking lot near field	Plant	06/13/07	06/28/07

LOGGED BY	CHECKED BY	APPROVED BY
GCO Ohlmacher	Emfor GCO Dogbey/Ohlmacher	Meyer Em

SAMPLING							CORING							DEPTH (FEET)	SAMPLE TYPE	ELEVATION (FEET)	GRAPHIC LOG	CLASSIFICATION OF MATERIALS	REMARKS
SAMPLE TYPE	SAMPLE NUMBER	SET 6 INCHES	2ND 6 INCHES	3RD 6 INCHES	N VALUE	SAMPLE RECOVERY	CORE SIZE	RUN NUMBER	RUN LENGTH	RUN RECOVERY	RQD RECOVERY	PERCENT RECOVERY	RQD						
														465		115		crystalline; micritic; fresh; strong; hard; w/anhydrite bands; (Salina Group - Unit B). 0°,J,VN,anhydrite,Pa,Pl,R @ 463.1'	
														463.5				DOLOMITE; dark brown; crystalline; micritic; fresh; strong; hard; massive; w/brown crystalline dolomite clasts; & shale partings; (Salina Group - Unit B). 20°,J,VN,No,No,Pl,R @ 463.7'	
										466.7				465.1				ANHYDRITE; white to bluish black; micritic; fresh; strong; moderately hard; intermingled w/brown to dark brown crystalline dolomite; (Salina Group - Unit B). 20°,J,VN,No,No,WA,R @ 465.4' 0°,J,VN,No,No,Pl,SR @ 466.3'	
PQ	89	5.0	4.8	4.8	96	96								466.8				DOLOMITE; banded dark brown & brown; crystalline; micritic; fresh; strong; hard; (Salina Group - Unit B). greenish black @ 468.2-469.2'	Core box #45 starts @ 468.5'.
														480		101			Bottom of boring @ 471.5'. Water level @ 19.8' @ completion of drilling. Boring blocked @ 248.0'. Boring cleared to 470' & backfilled w/ bentonite chips to 170' on 09/18/07. Boring backfilled w/bentonite chips to 40' on 09/19/07. Boring backfilled w/ bentonite chips and gravel to surface on 09/21/07.

BLACK & VEATCH

BORING LOG

BORING NO. RB-C9

SHEET 1 OF 19

CLIENT	PROJECT	PROJECT NO.
Detroit Edison	Fermi 3 COL Application	147483

PROJECT LOCATION	COORDINATES	GROUND ELEVATION (DATUM)	TOTAL DEPTH
Monroe, MI	N 6112.4' E 4616.0'	580.9 ft (NAVD 88)	270.5 (feet)

SURFACE CONDITIONS	COORDINATE SYSTEM	DATE START	DATE FINISHED
Gravel parking lot near laydown area	Plant	06/14/07	07/15/07

LOGGED BY	CHECKED BY	APPROVED BY
Grainger/Bonnie TB	Dogbey/Bonnie TB	Meyer EM

SAMPLING							CORING									
SAMPLE TYPE	SAMPLE NUMBER	SET 6 INCHES	2ND 6 INCHES	3RD 6 INCHES	N VALUE	SAMPLE RECOVERY	CORE SIZE	RUN NUMBER	RUN LENGTH	RUN RECOVERY	RQD RECOVERY	PERCENT RECOVERY	RQD	DEPTH (FEET)	SAMPLE TYPE	ELEVATION (FEET)	GRAPHIC LOG	CLASSIFICATION OF MATERIALS	REMARKS
														0				COBBLES - About 65% angular to elongated, very hard cobble w/max size 10"; about 15% fine to coarse, angular, hard gravel w/max size 3"; about 15% fine to coarse, angular, hard sand; about 5% fines; dark gray; strong reaction w/HCl; homogeneous; (Fill).	Boring advanced w/vacuum excavation.
														1		580			
														2		579			
										3.0				3		578			Below 3.0' continued w/4" ID sonic continuous sampler w/ nominal 6" temporary steel casing advanced w/sampler. Discrete sample collected from S1.
S	1												1.5	4		577			
														5		576			
										5.0				6		575			
														7		574			
S	1A												0	8		573			
														9		572			
														10		571			
										10.0				11		570			
														12		569			
S	2												2.0	13		568			
														14		567			
														14.7					Discrete sample collected from S2 @ 14.7-15.0'.
														15		566			

BLACK & VEATCH

BORING LOG

BORING NO. RB-C9
SHEET 2 OF 19

CLIENT	PROJECT	PROJECT NO.
Detroit Edison	Fermi 3 COL Application	147483

PROJECT LOCATION	COORDINATES	GROUND ELEVATION (DATUM)	TOTAL DEPTH
Monroe, MI	N 6112.4' E 4616.0'	580.9 ft (NAVD 88)	270.5 (feet)

SURFACE CONDITIONS	COORDINATE SYSTEM	DATE START	DATE FINISHED
Gravel parking lot near laydown area	Plant	06/14/07	07/15/07

LOGGED BY	CHECKED BY	APPROVED BY
Grainger/Bonnie TB	Dogbey/Bonnie TB	Meyer EM

SAMPLING: SAMPLE TYPE	SAMPLE NUMBER	SET 6 INCHES	2ND 6 INCHES	3RD 6 INCHES	N VALUE	SAMPLE RECOVERY	CORING: CORE SIZE	RUN NUMBER	RUN LENGTH	RUN RECOVERY	RQD RECOVERY	PERCENT RECOVERY	RQD	DEPTH (FEET)	ELEVATION (FEET)	CLASSIFICATION OF MATERIALS	REMARKS
														15		Fat CLAY (CH) - About 100% high plasticity, high toughness, no dilatancy, high dry strength fines; dark gray; very soft; moist; no reaction w/HCl; homogeneous; (Lacustrine Deposit).	Set nominal 6" temporary steel casing to 15.5'. Hole opened to 16.0'. Below 16.0' continued w/NWJ rods & tricone bit using bentonite mud as drilling fluid. SPT performed w/D-50 automatic hammer.
			16.0											16	565		
SPT	3	WOH	WOH	WOH	WOH	1.2								17	564		
														18	563		
TW	4					1.9								19	562	19.0	
														20	561	Lean CLAY (CL) - About 96% LL=47, PL=20, no dilatancy, high dry strength fines; about 4% fine to medium sand; trace fine, rounded to subangular, hard gravel w/max. size 1/2"; dark grayish brown; hard; moist; strong reaction w/HCl; homogeneous; (Glacial Till).	
														21	560		
														22	559	22.0	
SPT	5	7	11	17	28	1.5								23	558	Clayey GRAVEL with Sand (GC) - About 42% LL=42, PL=20, slow dilatancy, high dry strength fines; About 32% fine, subangular, hard gravel w/max. size about 26% fine to coarse, subrounded to angular, hard sand; dark gray; medium dense; moist; strong reaction w/HCl; homogeneous; (Glacial Till).	
														24	557		
														25	556		
														26	555		
														27	554	grading w/gabbro cobbles	Gabbro cobble recovered as sluff & stored in S-6.
			28.0											28	553	28.0	
														29	552	DOLOMITE; crystalline; micritic; slightly weathered; very strong; very hard; (Bass Islands Group).	Top of rock @ 28.0'. Below 28.0' continued w/4" ID sonic continuous sampler w/ nominal 6"
														30	551		

BLACK & VEATCH

BORING LOG

BORING NO. RB-C9

CLIENT	PROJECT	PROJECT NO.
Detroit Edison	Fermi 3 COL Application	147483

PROJECT LOCATION	COORDINATES	GROUND ELEVATION (DATUM)	TOTAL DEPTH
Monroe, MI	N 6112.4' E 4616.0'	580.9 ft (NAVD 88)	270.5 (feet)

SURFACE CONDITIONS	COORDINATE SYSTEM	DATE START	DATE FINISHED
Gravel parking lot near laydown area	Plant	06/14/07	07/15/07

LOGGED BY	CHECKED BY	APPROVED BY
CEO for Grainger/Bonnie TB	EMF Dogbey/Bonnie TB	EM Meyer

SAMPLING: SAMPLE TYPE	SAMPLE NUMBER	SET 6 INCHES	2ND 6 INCHES	3RD 6 INCHES	N VALUE	SAMPLE RECOVERY	CORING: CORE SIZE	RUN NUMBER	RUN LENGTH	RUN RECOVERY	RQD RECOVERY	PERCENT RECOVERY	RQD	DEPTH (FEET)	SAMPLE TYPE	ELEVATION (FEET)	GRAPHIC LOG	CLASSIFICATION OF MATERIALS	REMARKS
S	6					5.0								30					temporary steel casing advanced w/sampler. Sonic core stored in box.
														31		550			
														32		549			
														33		548			
										33.5									
HQ	1	2.0	2.0	0.0	100	0								34		547		80°,J,T,No,No,Pl,R @ 33.5-34.5' 80°,J,T,No,No,Pl,R @ 33.6-35.1' 0°,J,T,No,No,Pl,R @ 33.7' 60°,J,T,No,No,WA,R @ 34.2-34.3', 34.1-34.2' 0°,J,T,No,No,Pl,R @ 34.5', 34.7', 35.2'	Set nominal 6" temporary steel casing @ 33.6'. Water level @ 22.6' prior to drilling on 07/11/07. Core box #1 starts @ 33.6'.
														35		546		90°,J,T,No,No,WA,SR @ 35.1-35.5'	
										35.5								35.2 DOLOMITE; greenish gray; micritic; fresh; strong; hard; w/shale parting zones of 0.3' spaced at ~ 1.0' intervals; (Bass Islands Group). 0°,J,T,No,No,Pl,R @ 35.6', 35.9' 0°,J,T,No,No,WA,R @ 35.6' 0°,J,T,No,No,Pl,SR @ 35.8', 36.3' 0°,J,T,No,No,Pl,R @ 36.0', 36.5' 0°,J,T,No,No,Pl,R @ 37.1', 37.3', 37.7'	
														36		545			
														37		544			
HQ	2	5.0	5.0	1.5	100	30								38		543			
																		38.3 DOLOMITE; crystalline; gray & dark gray, mottled; micritic; fresh; strong; hard; w/shale partings; (Bass Islands Group). 90°,J,T,No,No,Pl,SR @ 38.8-39.35'	
														39		542			
														40		541			
										40.5								40.4 DOLOMITE; crystalline; light grayish brown; micritic; fresh; strong; hard; 0% to 15% vuggy; fossil molds; w/shale partings; stylolites; (Bass Islands Group). 0°,J,T,No,No,Pl,R @ 41.3', 41.8', 42.2' 90°,J,N,No,No,Pl,SR @ 41.6-41.7' (numerous joints) 90°,J,T,No,No,Pl,R @ 42.2-42.9', 42.6-42.9' 0°,J,T,No,No,Pl,R @ 42.6', 42.9', 43.5' 10°,J,T,No,No,Pl,R @ 43.1'	
														41		540			
														42		539			
HQ	3	5.0	5.0	3.0	100	60								43		538			
														44		537			
														45		536			

BLACK & VEATCH

BORING LOG

BORING NO. RB-C9
SHEET 4 OF 19

CLIENT	PROJECT	PROJECT NO.
Detroit Edison	Fermi 3 COL Application	147483

PROJECT LOCATION	COORDINATES	GROUND ELEVATION (DATUM)	TOTAL DEPTH
Monroe, MI	N 6112.4' E 4616.0'	580.9 ft (NAVD 88)	270.5 (feet)

SURFACE CONDITIONS	COORDINATE SYSTEM	DATE START	DATE FINISHED
Gravel parking lot near laydown area	Plant	06/14/07	07/15/07

LOGGED BY	CHECKED BY	APPROVED BY
GCO for Grainger/Bonnie TB	Dogbey/Bonnie TB	EM Meyer

SAMPLING							CORING									
SAMPLE TYPE	SAMPLE NUMBER	SET 6 INCHES	2ND 6 INCHES	3RD 6 INCHES	N VALUE	SAMPLE RECOVERY	CORE SIZE	RUN NUMBER	RUN LENGTH	RUN RECOVERY	RQD RECOVERY	PERCENT RECOVERY	RQD	DEPTH (FEET)	SAMPLE TYPE	ELEVATION (FEET)	GRAPHIC LOG	CLASSIFICATION OF MATERIALS	REMARKS
														45					
										45.5				46		535		10°,J,T,No,No,Pl,R @ 45.5', 45.6' 0°,J,T,No,No,Pl,SR @ 46.0'	
																		46.5	
														47		534		DOLOMITE; crystalline; grayish brown; micritic; fresh; strong; hard; (Bass Islands Group). 0°,J,T,No,No,Pl,SR @ 47.0' 30°,J,T,No,No,Pl,SR @ 47.2-47.5' 50°,J,T,No,No,Pl,R @ 47.3-47.4' 60°,J,T,No,No,Pl,SR @ 47.6-47.8'	Core box #2 starts @ 46.5'.
HQ	4	5.0	5.0	4.25	100	85								48		533			
																		0°,J,T,No,No,Pl,SR @ 48.4' 90°,J,VN,No,No,Pl,R @ 48.5-48.6' (surface)	
														49		532		0°,J,T,No,No,Pl,SR @ 49.0', 49.8' 90°,V,N,UK,Fi,R @ 49.1-49.2'	
														50		531		0°,J,T,No,No,Pl,SR @ 50.1', 50.2', 50.4'	
										50.5								50.6	
														51		530		DOLOMITE; oolitic; light brownish gray; micritic; fresh; strong; hard; (Bass Islands Group). 0°,J,T,No,No,Pl,R @ 50.6', 51.1', 51.7'	
														52		529			
																		52.7	
HQ	5	5.0	5.0	3.3	100	66								53		528		DOLOMITE; grayish brown; micritic; fresh; strong; hard; (Bass Island Group). 30°,J,T,No,No,WA,R @ 52.9'	
																		53.1	
														54		527		DOLOMITE; gray & dark gray; mottled; micritic; fresh; strong; hard; (Bass Islands Group). shale; thin bedded @ 53.2'	
																		53.5	
														55		526		DOLOMITE; oolitic; light brownish gray; micritic; fresh; strong; hard; (Bass Islands Group). 0°,J,T,No,No,Pl,R @ 53.6', 54.2', 54.8'	
										55.5				56		525			
																		56.2	
														57		524		BRECCIA; healed; light gray; very coarse grained to micritic; fresh; strong; hard; fining upward zones from coarse grained to laminar/convoluted bedding; (Bass Islands Group). 0°,J,T,No,No,Pl,SR @ 56.2', 56.4' 0°,J,VN,No,No,WA,R @ 56.6', 56.8', 57.1' fractured @ 57.1-57.2', 57.7-57.8' 90°,J,T,No,No,WA,SR @ 58.0-58.4' 40°,J,T,No,No,Pl,R @ 58.4-58.5'	
HQ	6	5.0	5.0	2.35	100	47								58		523			
														59		522		0°,J,T,No,No,Pl,SR @ 58.9', 59.7', 59.9' 0.02' thick black shale parting @ 59.4'	
																		59.7	
														60		521			

BLACK & VEATCH

BORING LOG

BORING NO. RB-C9

CLIENT	PROJECT	PROJECT NO.
Detroit Edison	Fermi 3 COL Application	147483

PROJECT LOCATION	COORDINATES	GROUND ELEVATION (DATUM)	TOTAL DEPTH
Monroe, MI	N 6112.4' E 4616.0'	580.9 ft (NAVD 88)	270.5 (feet)

SURFACE CONDITIONS	COORDINATE SYSTEM	DATE START	DATE FINISHED
Gravel parking lot near laydown area	Plant	06/14/07	07/15/07

LOGGED BY	CHECKED BY	APPROVED BY
Grainger/Bonnie TB	Dogbey/Bonnie TB	Meyer

SAMPLING: SAMPLE TYPE	SAMPLE NUMBER	SET 6 INCHES	2ND 6 INCHES	3RD 6 INCHES	N VALUE	SAMPLE RECOVERY	CORING: CORE SIZE	RUN NUMBER	RUN LENGTH	RUN RECOVERY	RQD RECOVERY	PERCENT RECOVERY	RQD	DEPTH (FEET)	SAMPLE TYPE	ELEVATION (FEET)	GRAPHIC LOG	CLASSIFICATION OF MATERIALS	REMARKS
														60				DOLOMITE; dark gray; micritic; fresh; strong; hard; w/shale partings & stylolites; (Bass Islands Group).	Core box #3 starts @ 60.3'.
							HQ	7	0.3	60.5 0.3 60.8	0.0	100	0	61		520			
														62		519		0°,J,VN,No,No,Pl,SR @ 61.4' 0°,J,VN,No,No,WA,SR @ 61.5' 10°,J,VN,UK,Pa,SR @ 61.7-61.75' 0°,J,VN,No,No,Pl,SR @ 62.2', 62.6', 62.8'	
							HQ	8	4.7	4.7	2.4	100	51	63		518		0°,J,VN,No,No,Pl,SR @ 63.1', 63.3', 63.4', 63.5' grades grayish brown @ 63.2' 25°,J,VN,No,No,WA,SR @ 63.35-63.4'	No drilling fluid return @ 63.0'.
														64		517		0°,J,VN,No,No,Pl,SR @ 64.1', 64.5', 64.6', 65.1'	
														65		516			
										65.5				66		515		0°,J,VN,UK,Sp,Pl,SR @ 66.0'	Water level @ 20.3' prior to drilling on 07/12/07.
																		0°,J,VN,No,No,Pl,SR @ 66.2' grades dark gray @ 66.5' grades grayish brown @ 66.8' 0°,J,VN,No,No,Pl,SR @ 67.0', 67.3' 60°,J,VN,No,No,WA,SR @ 67.15-67.25'	
							HQ	9	5.0	5.0	4.3	100	86	68		513		0°,J,VN,No,No,WA,SR @ 68.4'	
														69		512			
														70		511		0°,J,N,UK,Pa,R @ 69.6'	
										70.5				71		510			
																		45°,J,T,No,No,Pl,SR @ 71.6-71.8'	
														72		509		50°,J,T,No,No,Pl,SR @ 72.0-72.15'	
							HQ	10	5.0	5.0	NR	100	NR	73		508			
														74		507		0°,J,VN,No,No,Pl,SR @ 73.7'	Core box #4 starts @ 73.7'.
														75		506			

BLACK & VEATCH

BORING LOG

BORING NO. RB-C9

SHEET 6 OF 19

CLIENT	PROJECT	PROJECT NO.
Detroit Edison	Fermi 3 COL Application	147483

PROJECT LOCATION	COORDINATES	GROUND ELEVATION (DATUM)	TOTAL DEPTH
Monroe, MI	N 6112.4' E 4616.0'	580.9 ft (NAVD 88)	270.5 (feet)

SURFACE CONDITIONS	COORDINATE SYSTEM	DATE START	DATE FINISHED
Gravel parking lot near laydown area	Plant	06/14/07	07/15/07

LOGGED BY	CHECKED BY	APPROVED BY
GEO for Grainger/Bonnie TB	Dogbey/Bonnie TB	Meyer EM

SAMPLING							CORING										CLASSIFICATION OF MATERIALS	REMARKS
SAMPLE TYPE	SAMPLE NUMBER	SET 6 INCHES	2ND 6 INCHES	3RD 6 INCHES	N VALUE	SAMPLE RECOVERY	CORE SIZE	RUN NUMBER	RUN LENGTH	RUN RECOVERY	RQD RECOVERY	PERCENT RECOVERY	RQD	DEPTH (FEET)	SAMPLE TYPE	ELEVATION (FEET)	GRAPHIC LOG	
														75				0°,J,VN,No,No,Pl,SR @ 75.2', 75.4' 90°,J,T,No,No,Pl,SR @ 75.2-75.4'
										75.5				76		505		
														77		504		0°,J,VN,No,No,Pl,SR @ 76.5', 77.8', 78.2'
							HQ	11	5.0	5.0	4.6	100	92	78		503		
														79		502		0°,J,T,No,No,WA,SR @ 78.7' 20°,J,T,No,No,Pl,SR (weathered) @ 79.15-79.2'
																		79.6
														80		501		BRECCIA; indurated; dolomite; partially fining upward sequence; light gray; very coarse grained to micritic; fresh; strong; hard; fining upward from very coarse grained; w/curved bedding; (Bass Islands Group). 10°,J,T,No,No,WA,R @ 79.75', 80.3-80.35' mottled dolomite @ 80.2-80.5'
										80.5								80.5
														81		500		SHALE; dark gray; micritic; fresh; moderately hard; weak; (Bass Islands Group).
														82		499		80.7
							HQ	12	5.0	5.0	2.0	100	40	83		498		DOLOMITE; dark gray; micritic; fresh; strong; hard; (Bass Islands Group). 10°,J,T,No,No,WA,SR @ 80.7', 81.0', 81.1', 81.2' 0°,J,VN,UK,Sp,Pl,R @ 81.3', 83.5', 83.8' 90°,J,T,No,No,Pl,R @ 81.3-82.0' grades grayish brown @ 81.6' fractured @ 81.8-82.5'
														84		497		
														85		496		80°,J,T,No,No,Pl,R @ 84.5-85.2' 70°,J,T,No,No,Pl,SR @ 84.6-84.7' 20°,J,VN,UK,Sp,WA,SR @ 84.95-85.1'
										85.5								highly fractured @ 85.5-86.1'
														86		495		90°,J,T,No,No,WA,SR @ 86.1-86.5' 70°,J,T,No,No,Pl,SR @ 86.3-86.5'
														87		494		0°,J,VN,Cl,Fi,Pl,SR @ 86.5' 0°,J,VN,No,No,Pl,SR @ 86.6'
							HQ	13	5.0	5.0	2.9	100	58	88		493		30°,J,T,No,No,WA,SR @ 87.45-87.55', 89.4-89.6'
														89		492		
														90		491		89.9

Core box #5 starts @ 86.6'.

5/8/2008 9:12 AM DTE - Fermi 3 Geotech

BLACK & VEATCH

BORING LOG

BORING NO. RB-C9

CLIENT	PROJECT	PROJECT NO.
Detroit Edison	Fermi 3 COL Application	147483

PROJECT LOCATION	COORDINATES	GROUND ELEVATION (DATUM)	TOTAL DEPTH
Monroe, MI	N 6112.4' E 4616.0'	580.9 ft (NAVD 88)	270.5 (feet)

SURFACE CONDITIONS	COORDINATE SYSTEM	DATE START	DATE FINISHED
Gravel parking lot near laydown area	Plant	06/14/07	07/15/07

LOGGED BY	CHECKED BY	APPROVED BY
CCO for Grainger/Bonnie TB	Dogbey/Bonnie TB	Meyer

SAMPLING: SAMPLE TYPE	SAMPLE NUMBER	SET 6 INCHES	2ND 6 INCHES	3RD 6 INCHES	N VALUE	SAMPLE RECOVERY

CORING: CORE SIZE	RUN NUMBER	RUN LENGTH	RUN RECOVERY	RQD RECOVERY	PERCENT RECOVERY	RQD
HQ	14	5.0	5.0	3.1	100	62
HQ	15	5.0	5.0	3.2	100	64
HQ	16	5.0	5.0	4.0	100	80

DEPTH (FEET)	SAMPLE TYPE	ELEVATION (FEET)	GRAPHIC LOG	CLASSIFICATION OF MATERIALS	REMARKS
90				DOLOMITE; argillaceous; gray; micritic; fresh; strong; hard; w/shale partings; (Bass Islands Group).	
				0°,J,VN,No,No,WA,R @ 89.9'	
91		490		0°,J,VN,UK,Fi,Pl,SR @ 90.3'	
				0°,J,VN,No,No,Pl,SR @ 90.7', 91.2', 91.3', 91.5', 91.9'	
92		489		0°,J,VN,No,No,Pl,SR @ 92.0', 92.1', 92.2', 92.3', 92.5', 92.6'	
93		488		0°,J,VN,No,No,Pl,SR @ 93.2'	
94		487		93.9 DOLOMITE; dark gray; micritic; fresh; strong; hard; w/stylolites; (Bass Islands Group).	
				0°,J,VN,No,No,Pl,SR @ 93.2',94.2',94.3',94.6'	
95		486		90°,J,T,No,No,Pl,SR @ 95.3-95.5'	
96		485		clay band @ 95.8-95.9'	
				0°,J,T,No,No,Pl,SR @ 95.8', 95.9', 96.7', 96.8'	
				90°,J,T,Cl,Fi,Pl,SR @ 95.9-96.0', 97.2-97.3'	
97		484		0°,J,VN,UK,Sp,SR @ 96.5'	
				0°,J,T,No,No,Pl,SR @ 97.2', 97.3', 97.5', 97.6'	
98		483		0°,J,T,No,No,Pl,SR @ 98.2'	
99		482		grades light brownish gray @ ~ 99.2'	
				0°,J,VN,Cl,Fi,Pl,SR @ 99.25'	
100		481		0°,J,T,No,No,Pl,SR @ 99.5',99.9',100.1'	
101		480		90°,J,T,No,No,Pl,SR @ 100.5-100.8'	Core box #6 starts @ 100.5'.
				10°,J,T,No,No,Pl,SR @ 101.6'	
102		479		0°,J,T,No,No,Pl,SR @ 101.8',102.55'	
				25°,J,T,No,No,Ir,SR @ 102.0'	
103		478		25°,J,T,No,No,Pl,SR @ 102.7'	
104		477		0°,J,T,No,No,Pl,SR (weathered) @ 104.3'	
105		476		0°,J,T,No,No,Pl,SR @ 104.8'	

BLACK & VEATCH

BORING LOG

BORING NO. RB-C9

CLIENT	PROJECT	PROJECT NO.
Detroit Edison	Fermi 3 COL Application	147483

PROJECT LOCATION	COORDINATES	GROUND ELEVATION (DATUM)	TOTAL DEPTH
Monroe, MI	N 6112.4' E 4616.0'	580.9 ft (NAVD 88)	270.5 (feet)

SURFACE CONDITIONS	COORDINATE SYSTEM	DATE START	DATE FINISHED
Gravel parking lot near laydown area	Plant	06/14/07	07/15/07

LOGGED BY	CHECKED BY	APPROVED BY
Grainger/Bonnie	Dogbey/Bonnie	Meyer

SAMPLING							CORING									
SAMPLE TYPE	SAMPLE NUMBER	SET 6 INCHES	2ND 6 INCHES	3RD 6 INCHES	N VALUE	SAMPLE RECOVERY	CORE SIZE	RUN NUMBER	RUN LENGTH	RUN RECOVERY	RQD RECOVERY	PERCENT RECOVERY	RQD	DEPTH (FEET)	SAMPLE TYPE	ELEVATION (FEET)	GRAPHIC LOG	CLASSIFICATION OF MATERIALS	REMARKS
														105					
										105.5				106		475		highly fractured @ 105.5-105.8' clay @ 105.6-105.7' 0°,J,T,No,No,WA,SR @ 105.8' 60°,J,T,No,No,Pl,SR @ 106.0-106.6', 106.4-106.9'	
														107		474		90°,J,T,No,No,WA,SR @ 106.9-107.5'	
HQ	17	5.0	5.0	2.6	100	52								108		473		30°,J,T,No,No,Ir,SR @ 107.3-107.5' 0°,J,T,No,No,WA,SR @ 107.5' 60°,J,T,Cl,Pa,WA,SR @ 107.7-108.8' 0°,J,T,No,No,Ir,SR @ 107.8'	
														109		472		anhydrite filled vug @ 109.1' 10°,J,T,No,No,WA,SR @ 109.25'	
														110		471			
										110.5				111		470		fractured @ 111.1-111.3' 80°,J,T,No,No,Pl,SR @ 111.3-112.5' 0°,J,T,No,No,Pl,SR @ 111.3', 112.1', 112.3'	
														112		469		112.5	
HQ	18	5.0	4.5	1.9	90	38								113		468		DOLOMITE; light gray; fresh; strong; hard; (Salina Group - Unit F). calcite vugs @ 112.5' 10°,J,T,UK,Pa,Pl,SR @ 113.0'	
														114		467		113.7 SHALE; black; coarse grained to micritic; (Salina Group - Unit F).	
														115		466		114.1 DOLOMITE; light gray; fresh; strong; hard; (Salina Group - Unit F). 10°,J,T,No,No,Ir,SR @ 115.0'	
										115.5				116		465		clay @ 115.7-115.9' highly fractured @ 115.9-116.0' 90°,J,VN,No,No,Ir,SR @ 116.0-116.2' 0°,J,VN,No,No,Pl,SR @ 116.4', 116.6', 116.7', 116.95', 117.15'	Core box #7 starts @ 115.5'.
														117		464		fractured @ 117.2-117.4'	
HQ	19	4.6	3.8	0.0	83	0								118		463		117.6 DOLOMITE; argillaceous; very dark grayish brown; very fine grained; strong; hard; w/some anhydrite bedding & shale parting; (Salina Group - Unit F).	
														119		462		anhydrite beds (0.2" thick) @ 118.8-119.5' 10°,J,T,No,No,Pl,SR @ 119.0', 119.2'	
														120		461		fractured @ 119.5-120.1'	

BLACK & VEATCH

BORING LOG

BORING NO. RB-C9

CLIENT	PROJECT	PROJECT NO.
Detroit Edison	Fermi 3 COL Application	147483

PROJECT LOCATION	COORDINATES	GROUND ELEVATION (DATUM)	TOTAL DEPTH
Monroe, MI	N 6112.4' E 4616.0'	580.9 ft (NAVD 88)	270.5 (feet)

SURFACE CONDITIONS	COORDINATE SYSTEM	DATE START	DATE FINISHED
Gravel parking lot near laydown area	Plant	06/14/07	07/15/07

LOGGED BY	CHECKED BY	APPROVED BY
Grainger/Bonnie TB	Dogbey/Bonnie TB	Meyer

SAMPLING

SAMPLE TYPE	SAMPLE NUMBER	SET 6 INCHES	2ND 6 INCHES	3RD 6 INCHES	N VALUE	SAMPLE RECOVERY

CORING

CORE SIZE	RUN NUMBER	RUN LENGTH	RUN RECOVERY	RQD RECOVERY	PERCENT RECOVERY	RQD
HQ	20	0.4	120.1 0.4	0.33	100	83
HQ	21	5.0	120.5 3.0	0.6	60	12
HQ	22	5.0	125.5 2.6	0.0	52	0
HQ	23	5.0	130.5 4.3	0.0	86	0

DEPTH (FEET)	ELEVATION (FEET)	CLASSIFICATION OF MATERIALS	REMARKS
120		0°,J,N,Cl,Fi,Pl,SR @ 120.35'	
121	460	0°,J,VN,No,No,Pl,SR @ 121.2' 0°,B,MW,anhydrite,Fi,Pl,SR @ 121.5'	
122	459		
123	458	122.5 DOLOMITE; shaley; light brownish gray; micritic; fresh; strong; hard; (Salina Group - Unit F).	
124	457	123.8 LIMESTONE; very dark gray; micritic; fresh; strong; hard; (Salina Group - Unit F).	
125	456	124.7 CLAYSTONE; bluish gray; slightly weathered; weak; low hardness; (Salina Group - Unit F).	
126	455	126.0 LIMESTONE; gray; micritic; fresh; strong; hard; (Salina Group - Unit F).	
127	454	127.0 DOLOMITE; gray; micritic; fresh; strong; hard; (Salina Group - Unit F).	
128	453	128.2 CLAYSTONE; bluish gray; slightly weathered; weak; low hardness; w/interbedded dolomite; (Salina Group - Unit F).	
129	452	highly fractured @ 129.5-129.9'	
130	451		
131	450		Water level @ 21.9' prior to drilling on 07/13/07.
132	449	dolomite @ 131.7-132.0' 80°,J,T,No,No,Pl,R @ 131.7-132.0'	
133	448	grades w/interbedded limestone; no dolomite @ 133.0'	
134	447	134.1 DOLOMITE; grayish brown; micritic; fresh; very strong; hard; (Salina Group - Unit F).	Core box #8 starts @ 133.8'.
135	446		

BLACK & VEATCH

BORING LOG

BORING NO. RB-C9
SHEET 10 OF 19

CLIENT	PROJECT	PROJECT NO.
Detroit Edison	Fermi 3 COL Application	147483

PROJECT LOCATION	COORDINATES	GROUND ELEVATION (DATUM)	TOTAL DEPTH
Monroe, MI	N 6112.4' E 4616.0'	580.9 ft (NAVD 88)	270.5 (feet)

SURFACE CONDITIONS	COORDINATE SYSTEM	DATE START	DATE FINISHED
Gravel parking lot near laydown area	Plant	06/14/07	07/15/07

LOGGED BY	CHECKED BY	APPROVED BY
GG for TB Grainger/Bonnie	ESM for TB Dogbey/Bonnie	ESM Meyer

SAMPLING							CORING									
SAMPLE TYPE	SAMPLE NUMBER	SET 6 INCHES	2ND 6 INCHES	3RD 6 INCHES	N VALUE	SAMPLE RECOVERY	CORE SIZE	RUN NUMBER	RUN LENGTH	RUN RECOVERY	RQD RECOVERY	PERCENT RECOVERY	RQD	DEPTH (FEET)	SAMPLE TYPE	ELEVATION (FEET)	GRAPHIC LOG	CLASSIFICATION OF MATERIALS	REMARKS
														135				anhydrite bedding @ 134.9' 90°,J,T,No,No,Pl,SR @ 135.2-135.5'	
			135.5											136		445			
																		—136.3— CLAYSTONE; bluish gray; weak; low hardness; w/ interbedded dolomite; (Salina Group - Unit F).	
														137		444			
HQ	24	5.0	2.0	0.0	40	0	HQ	24	5.0	2.0	0.0	40	0	138		443			
														139		442			
																		—139.5— DOLOMITE; gray; micritic; fresh; strong; hard; (Salina Group - Unit F). highly fractured @ 139.5-139.8' 60°,J,T,No,No,Pl,SR @ 140.0-140.4'	
			140.5											140		441			
																		—140.7— CLAYSTONE; bluish gray; weak; low hardness; w/ interbedded dolomite; (Salina Group - Unit F).	
														141		440			
														142		439			
HQ	25	5.0	4.4	0.0	88	0	HQ	25	5.0	4.4	0.0	88	0	143		438			Discrete sample 8A taken from HQ-25 @ 142.75-143.5'.
														144		437			
														145		436			Discrete sample 8B taken from HQ-25 @ 144.3-144.7'.
																		—145.2— DOLOMITE; gray; micritic; strong; hard; (Salina Group - Unit F).	
			145.5											146		435		—145.8— CLAYSTONE; bluish gray; weak; low hardness; w/ interbedded dolomite; (Salina Group - Unit F).	
														147		434		clay; soft @ 146.8-147.6' fractured @ 147.3-147.7'	Discrete sample 8C taken from HQ-26 @ 146.9-147.5'.
HQ	26	5.0	3.0	0.0	60	0	HQ	26	5.0	3.0	0.0	60	0	148		433		fractured @ 148.2-149.0'	
														149		432			
														150		431			

5/8/2008 9:12 AM DTE - Fermi 3 Geotech

BLACK & VEATCH

BORING LOG

BORING NO. RB-C9

CLIENT	PROJECT	PROJECT NO.
Detroit Edison	Fermi 3 COL Application	147483

PROJECT LOCATION	COORDINATES	GROUND ELEVATION (DATUM)	TOTAL DEPTH
Monroe, MI	N 6112.4' E 4616.0'	580.9 ft (NAVD 88)	270.5 (feet)

SURFACE CONDITIONS	COORDINATE SYSTEM	DATE START	DATE FINISHED
Gravel parking lot near laydown area	Plant	06/14/07	07/15/07

LOGGED BY	CHECKED BY	APPROVED BY
Grainger/Bonnie TB	Dogbey/Bonnie TB	Meyer EM

SAMPLING							CORING									
SAMPLE TYPE	SAMPLE NUMBER	SET 6 INCHES	2ND 6 INCHES	3RD 6 INCHES	N VALUE	SAMPLE RECOVERY	CORE SIZE	RUN NUMBER	RUN LENGTH	RUN RECOVERY	RQD RECOVERY	PERCENT RECOVERY	RQD	DEPTH (FEET)	SAMPLE TYPE	ELEVATION (FEET)	GRAPHIC LOG	CLASSIFICATION OF MATERIALS	REMARKS
														150					
							HQ	27	0.7	150.5 0.1	0.0	14	0	151		430			
										151.2				152		429		clay; medium plasticity, high toughness; soft; moist; strong reaction w/HCl @ 151.7-152.1' grades moderately hard @ 152.1'	PP = 0.4 TSF @ 151.7-152.1'. Core box #9 starts @ 152.1'.
							HQ	28	4.3	4.0	1.9	93	44	153		428		0°,J,VN,Cl,Pa,Pl,SR @ 153.5'	
														154		427		153.9 DOLOMITE; dark gray; micritic; fresh; strong; hard; (Salina Group - Unit F). 0°,J,VN,No,No,Ir,R @ 154.4'	
														155		426		50°,J,VN,No,No,Pl,SR @ 154.9'	
										155.5				156		425		155.6 CLAYSTONE; calcareous; bluish gray; fresh; weak; moderately hard; w/interbedded dolomite dolomite @ 156.0-156.3'	
							HQ	29	5.0	4.9	1.7	98	34	157		424			
														158		423		argillaceous dolomite band @ 157.85-158.0'	
														159		422		highly fractured @ 158.9-159.2', 160.2-160.5'	
														160		421		159.4 DOLOMITE; dark gray; micritic; fresh; strong; hard; (Salina Group - Unit F). 90°,J,VN,No,No,Pl,SR @ 159.5-159.8' 90°,J,VN,Cl,Pl,SR @ 159.9-160.2' 60°,J,VN,Cl,Pl,SR @ 159.9-160.2'	
										160.5				161		420		160.8 CLAYSTONE; non-calcareous; bluish gray; fresh; weak; low hardness; (Salina Group - Unit F).	
														162		419		clay; soft @ 162.2-162.5'	
							HQ	30	5.0	2.1	0.0	42	0	163		418			
														164		417		164.0 DOLOMITE; (Salina Group - Unit F).	
														165		416		164.5 CLAYSTONE; non-calcareous; bluish gray; fresh;	

BLACK & VEATCH

BORING LOG

BORING NO. RB-C9

CLIENT	PROJECT	PROJECT NO.
Detroit Edison	Fermi 3 COL Application	147483

PROJECT LOCATION	COORDINATES	GROUND ELEVATION (DATUM)	TOTAL DEPTH
Monroe, MI	N 6112.4' E 4616.0'	580.9 ft (NAVD 88)	270.5 (feet)

SURFACE CONDITIONS	COORDINATE SYSTEM	DATE START	DATE FINISHED
Gravel parking lot near laydown area	Plant	06/14/07	07/15/07

LOGGED BY	CHECKED BY	APPROVED BY
Grainger/Bonnie TB	Dogbey/Bonnie TB	Meyer

SAMPLING							CORING									
SAMPLE TYPE	SAMPLE NUMBER	SET 6 INCHES	2ND 6 INCHES	3RD 6 INCHES	N VALUE	SAMPLE RECOVERY	CORE SIZE	RUN NUMBER	RUN LENGTH	RUN RECOVERY	RQD RECOVERY	PERCENT RECOVERY	RQD	DEPTH (FEET)	SAMPLE TYPE	ELEVATION (FEET)	GRAPHIC LOG	CLASSIFICATION OF MATERIALS	REMARKS
														165				weak; low hardness; (Salina Group - Unit F).	
										165.5				166		415		clay; soft @ 166.5-166.9'	
														167		414		fractured @ 167.4-167.8'	
							HQ	31	5.0	2.3	0.0	46	0	168		413		gray @ 168.7-169.9'	
														169		412		fractured @ 169.9-170.4'	
														170		411		170.5	
										170.5				171		410		CLAYSTONE; bluish gray; fresh; weak; low hardness; (Salina Group - Unit F).	Core box #10 starts @ 170.5'. Water level @ 21.8' prior to drilling on 07/14/07. PP = 0.6 TSF @ 171.5-171.8'.
							HQ	32	2.5	1.25	0.0	50	0	172		409		clay; soft @ 171.5-171.8'	
														173		408		173.3	
										173.0				174		407		BRECCIA; poorly indurated to indurated claystone matrix; gray; weathered; very weak; low hardness; w/ clasts of shaley dolomite; pale brown; micritic; low hardness; & limestone; greenish gray; micritic; (Salina Group - Unit F).	
							HQ	33	2.5	0.7	0.0	28	0	175		406			
														176		405		dolomite; pale brown @ 175.6-176.0' 90°,J,T,No,No,Pl,SR @ 175.6-176.0' limestone; greenish gray @ 176.0-176.3' 60°,J,VN,No,No,Pl,SR @ 176.1-176.3'	
										175.5				177		404			
							HQ	34	2.5	2.1	0.0	84	0	178		403			
														179		402		0°,V,MW,Ca,Fi,Pl,R @ 178.2'	
										178.0				180		401		limestone band @ 179.1-179.3' claystone band @ 179.3-179.4'	
							HQ	35	2.5	1.2	0.0	48	0					179.4	

BLACK & VEATCH

BORING LOG

BORING NO. RB-C9

SHEET 13 OF 19

CLIENT	PROJECT	PROJECT NO.
Detroit Edison	Fermi 3 COL Application	147483

PROJECT LOCATION	COORDINATES	GROUND ELEVATION (DATUM)	TOTAL DEPTH
Monroe, MI	N 6112.4' E 4616.0'	580.9 ft (NAVD 88)	270.5 (feet)

SURFACE CONDITIONS	COORDINATE SYSTEM	DATE START	DATE FINISHED
Gravel parking lot near laydown area	Plant	06/14/07	07/15/07

LOGGED BY	CHECKED BY	APPROVED BY
Grainger/Bonnie TB	Dogbey/Bonnie TB	Meyer

SAMPLING							CORING									
SAMPLE TYPE	SAMPLE NUMBER	SET 6 INCHES	2ND 6 INCHES	3RD 6 INCHES	N VALUE	SAMPLE RECOVERY	CORE SIZE	RUN NUMBER	RUN LENGTH	RUN RECOVERY	RQD RECOVERY	PERCENT RECOVERY	RQD	DEPTH (FEET)	SAMPLE TYPE	ELEVATION (FEET)	GRAPHIC LOG	CLASSIFICATION OF MATERIALS	REMARKS
														180				LIMESTONE; (Salina Group - Unit F).	
																		180.1	
							HQ	36	2.5	180.5 0.5	0.0	20	0	181		400		BRECCIA; poorly indurated to indurated claystone matrix; gray; micritic; weathered; very weak; low hardness; w/clasts of shaley dolomite; pale brown; micritic; low hardness; & limestone; greenish gray; micritic; (Salina Group - Unit F). limestone band @ 181.0-181.2'	
														182		399		limestone band @ 182.4-182.5'	
							HQ	37	2.5	183.0 2.3	0.0	92	0	183		398			
														184		397		184.0	
																		DOLOMITE; (Salina Group - Unit F). 90°,J,VN,UK,Fi,Pl,SR @ 184.1-184.3' 20°,J,N,UK,Fi,Pl,SR @ 184.3-184.4'	Discrete sample 10A taken from HQ-37 @ 184.5-185.0'.
														185		396		184.5 BRECCIA; poorly indurated to indurated claystone matrix; gray; weathered; very weak; low hardness; w/ clasts of shaley dolomite; pale brown; micritic; low hardness; & limestone; greenish gray; micritic; (Salina Group - Unit F). dolomite @ 185.2-185.5'	
							HQ	38	2.5	185.5 1.5	0.0	60	0	186		395			Discrete sample 10B taken from HQ-38 @ 186.7-187.3'.
														187		394			
														188		393			
							HQ	39	2.5	188 1.2	0.0	48	0	189		392			
														190		391		189.7 LIMESTONE; greenish gray; micritic; fresh; strong; hard; (Salina Group - Unit F).	
							HQ	40	2.5	190.5 0.5	0.0	20	0	191		390			
														192		389			
							HQ	41	2.5	193.0 2.0	0.0	80	0	193		388		grades grayish brown @ 193.0'	Core box #11 starts @ 193.0'.
														194		387		194.0 DOLOMITE; (Salina Group - Unit F).	
														195		386		194.6 CLAY; (Salina Group - Unit F).	

5/8/2008 9:12 AM DTE - Fermi 3 Geotech

BLACK & VEATCH

BORING LOG

BORING NO. RB-C9

CLIENT	PROJECT	PROJECT NO.
Detroit Edison	Fermi 3 COL Application	147483

PROJECT LOCATION	COORDINATES	GROUND ELEVATION (DATUM)	TOTAL DEPTH
Monroe, MI	N 6112.4' E 4616.0'	580.9 ft (NAVD 88)	270.5 (feet)

SURFACE CONDITIONS	COORDINATE SYSTEM	DATE START	DATE FINISHED
Gravel parking lot near laydown area	Plant	06/14/07	07/15/07

LOGGED BY	CHECKED BY	APPROVED BY
Grainger/Bonnie TB	Dogbey/Bonnie TB	Meyer

SAMPLING							CORING									
SAMPLE TYPE	SAMPLE NUMBER	SET 6 INCHES	2ND 6 INCHES	3RD 6 INCHES	N VALUE	SAMPLE RECOVERY	CORE SIZE	RUN NUMBER	RUN LENGTH	RUN RECOVERY	RQD RECOVERY	PERCENT RECOVERY	RQD	DEPTH (FEET)	SAMPLE TYPE	ELEVATION (FEET)	GRAPHIC LOG	CLASSIFICATION OF MATERIALS	REMARKS
														195				195.0 LIMESTONE; greenish gray; micritic; fresh; strong; hard; (Salina Group - Unit F).	
										195.5				196		385		195.5 CLAYSTONE; calcareous; micritic; slightly weathered; weak; low hardness; (Salina Group - Unit F). completely weathered; soft (clay like) @ 195.8-196.4', 197.1-197.3'	
							HQ	42	2.0	2.0	0.0	100	0	197		384			
										197.5				198		383		clay bands @ 197.5-197.7', 197.9-198.1'	
																		brecciated dolomite band @ 198.4'	Discrete sample 11A taken from HQ-43 @ 198.5-199.0'.
							HQ	43	3.0	3.0	1.0	100	33	199		382			
																		highly fractured @ 199.5-200.0'	
										200.5				200		381			
														201		380		200.8 LIMESTONE; greenish gray; micritic; fresh; strong; hard; 5% vuggy; (Salina Group - Unit F).	
														202		379			
							HQ	44	5.0	2.5	0.8	50	16	203		378		0°,J,VN,Ca,Pa,Pl,SR @ 203.0'	
														204		377			
														205		376			Driller reported a sudden drop of about 1' of the drill rod @ 204.5'.
										205.5				206		375		205.8 DOLOMITE; shaley; light brownish gray; micritic; fresh; strong; hard; (Salina Group - Unit F). fractured @ 205.7-206.7'	
														207		374		clay band; white @ 206.7-206.8; 207.1-207.25'	
																		60°,J,T,No,No,Pl,SR @ 207.4-207.5'	
							HQ	45	5.0	4.1	0.0	82	0	208		373		20°,J,T,No,No,Pl,SR @ 207.5-207.6'	
																		10°,J,T,No,No,Pl,SR @ 208.1'	
														209		372		90°,J,VN,Cl,Pa,Pl,SR @ 208.15-208.35'	
																		30°,J,VN,Cl,Pa,Pl,SR @ 208.2-208.3'	
														210		371		208.4 LIMESTONE; greenish gray; micritic; fresh; strong; hard; (Salina Group - Unit F). clay; white @ 209.25-209.35'	

BLACK & VEATCH

BORING LOG

BORING NO. RB-C9

CLIENT	PROJECT	PROJECT NO.
Detroit Edison	Fermi 3 COL Application	147483

PROJECT LOCATION	COORDINATES	GROUND ELEVATION (DATUM)	TOTAL DEPTH
Monroe, MI	N 6112.4' E 4616.0'	580.9 ft (NAVD 88)	270.5 (feet)

SURFACE CONDITIONS	COORDINATE SYSTEM	DATE START	DATE FINISHED
Gravel parking lot near laydown area	Plant	06/14/07	07/15/07

LOGGED BY	CHECKED BY	APPROVED BY
Grainger/Bonnie TB	Dogbey/Bonnie TB	Meyer

SAMPLING: SAMPLE TYPE	SAMPLE NUMBER	SET 6 INCHES	2ND 6 INCHES	3RD 6 INCHES	N VALUE	SAMPLE RECOVERY

CORING: CORE SIZE	RUN NUMBER	RUN LENGTH	RUN RECOVERY	RQD RECOVERY	PERCENT RECOVERY	RQD
HQ	46	5.0	3.2	1.9	64	38
HQ	47	5.0	3.5	0.0	70	0
HQ	48	5.0	1.5	0.0	30	0

DEPTH (FEET)	SAMPLE TYPE	ELEVATION (FEET)	GRAPHIC LOG	CLASSIFICATION OF MATERIALS	REMARKS
210				20°,J,T,No,No,Pl,SR @ 209.3' 90°,J,T,No,No,Pl,SR @ 209.65-209.8', 210.0-210.3'	
				209.9	
210.5				DOLOMITE; shaley; light brownish gray; micritic; fresh; strong; hard; w/fossil layers; (Salina Group - Unit F). 0°,J,VN,Ca,Sp,Pl,SR @ 210.7', 210.8', 210.9 ' 0°,J,VN,No,No,Ir,SR @ 211.1', 211.5'	Core box #12 starts @ 210.5'.
211		370			
212		369			
				211.2	
				BRECCIA; healed; limestone matrix; greenish gray; micritic; fresh; strong; hard; w/dolomite clasts; (Salina Group - Unit F).	
213		368			
				211.5	Driller reported about 1.0' drop of drill rod @ 213.0-214.0'.
				DOLOMITE; shaley; light brownish gray; micritic; fresh; strong; hard; (Salina Group - Unit F). 0°,J,VN,No,No,Ir,SR @ 211.8', 212.3'	
214		367			
				212.5	
				BRECCIA; healed; limestone matrix; greenish gray; micritic; fresh; strong; hard; w/shaley dolomite clasts; (Salina Group - Unit F).	
215		366			
				214.3	
215.5				LIMESTONE; micritic; pale brown; fresh; strong; hard; (Salina Group - Unit F). 0°,J,T,No,No,Pl,SR @ 214.4' 60°,J,T,No,No,Pl,SR @ 215.2-215.5'; pale brown	
216		365			
217		364		0°,J,VN,No,No,WA,SR @ 216.7'	
				217.5	
218		363		DOLOMITE; shaley; light brownish gray; micritic; fresh; strong; hard; (Salina Group - Unit F). 90°,J,VN,Ca,Pa,WA,SR @ 217.5-219.3' 0°,J,VN,No,No,Pl,SR @ 217.6', 217.8', 218.6', 219.3', 219.5', 220.0'	
219		362			
220		361			
				220.2	
220.5				BRECCIA; healed; limestone matrix; greenish gray; micritic; fresh; strong; hard; w/shaley dolomite clasts; (Salina Group - Unit F).	Water level @ 25.6' prior to drilling on 07/15/07.
221		360			
222		359		90°,J,T,No,No,Pl,S; joint has dolomite on one side & limestone on other @ 222.0-223.5'	
223		358			
				223.5	
				CLAYSTONE; weak to very weak; w/dolomite partings	Driller reported rapid advancement of drill stem from 223.5-228.5'.
224		357			
225		356			

BLACK & VEATCH

BORING LOG

BORING NO. RB-C9

SHEET 16 OF 19

CLIENT	PROJECT	PROJECT NO.
Detroit Edison	Fermi 3 COL Application	147483

PROJECT LOCATION	COORDINATES	GROUND ELEVATION (DATUM)	TOTAL DEPTH
Monroe, MI	N 6112.4' E 4616.0'	580.9 ft (NAVD 88)	270.5 (feet)

SURFACE CONDITIONS	COORDINATE SYSTEM	DATE START	DATE FINISHED
Gravel parking lot near laydown area	Plant	06/14/07	07/15/07

LOGGED BY	CHECKED BY	APPROVED BY
GEC for TFB Grainger/Bonnie	EM for TFB Dogbey/Bonnie	EM Meyer

SAMPLING							CORING									
SAMPLE TYPE	SAMPLE NUMBER	SET 6 INCHES	2ND 6 INCHES	3RD 6 INCHES	N VALUE	SAMPLE RECOVERY	CORE SIZE	RUN NUMBER	RUN LENGTH	RUN RECOVERY	RQD RECOVERY	PERCENT RECOVERY	RQD	DEPTH (FEET)	SAMPLE TYPE	ELEVATION (FEET)	GRAPHIC LOG	CLASSIFICATION OF MATERIALS	REMARKS
														225					
										225.5				226		355			
														227		354			
							HQ	49	5.0	2.0	0.0	40	0	228		353			
														229		352			
														230		351			
										230.5				231		350			
							HQ	50	5.0	2.0	0.0	40	0	232		349			
														233		348			
														234		347			
														235		346			
										235.5				236		345			
							HQ	51	2.5	1.9	0.3	76	12	237		344			
														238		343			
										238.0				239		342			
							HQ	52	2.5	1.5	0.4	60	16	240		341			

228.5

Poorly graded SAND with Clay and Gravel (SP-SC) - About 70% sand; about 20% gravel; rounded to subrounded, with max. size 1/2"; about 10% fines; dark to very dark gray; moist; weak; (Salina Group - Unit F)

229.5

DOLOMITE; gray; micritic; fresh; strong; hard; (Salina Group - Unit F).
90°,J,N,Cl,Pa,Pl,SR @ 229.5-230.5'
highly fractured w/clay infill @ 229.7-230.3'

highly fractured @ 231.5-232.3'

highly fractured @ 232.5-233.7'

234.7

BRECCIA; poorly indurated to indurated; limestone matrix; greenish gray; micritic; fresh; strong; hard; w/ shaley dolomite clasts; (Salina Group - Unit F).

Core box #13 starts @ 235.5'.

236.1

DOLOMITE; light brownish gray; micritic; fresh; strong; hard; (Salina Group - Unit F).
0°,J,VN,Cl,Pa,Pl,SR @ 236.7', 236.9', 237.2', 237.3', 237.4', 237.5', 237.9'

237.3

DOLOMITE; gray; micritic; fresh; strong; moderately hard; (Salina Group - Unit F).

237.7

DOLOMITE; light brownish gray; micritic; fresh; strong; hard; w/fossil zones; (Salina Group - Unit E).
0°,J,T,No,No,Pl,SR @ 238.8', 239.4', 239.6'
30°,J,T,No,No,Pl,SR @ 238.8-239.0'
90°,J,T,No,No,Pl,SR @ 239.4-239.6'
60°,J,T,No,No,Pl,SR @ 239.6-239.9'

BLACK & VEATCH

BORING LOG

BORING NO. RB-C9

SHEET 17 OF 19

CLIENT	PROJECT	PROJECT NO.
Detroit Edison	Fermi 3 COL Application	147483

PROJECT LOCATION	COORDINATES		GROUND ELEVATION (DATUM)	TOTAL DEPTH
Monroe, MI	N 6112.4'	E 4616.0'	580.9 ft (NAVD 88)	270.5 (feet)

SURFACE CONDITIONS	COORDINATE SYSTEM	DATE START	DATE FINISHED
Gravel parking lot near laydown area	Plant	06/14/07	07/15/07

LOGGED BY	CHECKED BY	APPROVED BY
GCO for Grainger/Bonnie TB	Tm for Dogbey/Bonnie TB	Em Meyer

SAMPLING							CORING							DEPTH (FEET)	SAMPLE TYPE	ELEVATION (FEET)	GRAPHIC LOG	CLASSIFICATION OF MATERIALS	REMARKS
SAMPLE TYPE	SAMPLE NUMBER	SET 6 INCHES	2ND 6 INCHES	3RD 6 INCHES	N VALUE	SAMPLE RECOVERY	CORE SIZE	RUN NUMBER	RUN LENGTH	RUN RECOVERY	RQD RECOVERY	PERCENT RECOVERY	RQD						
														240				90°,J,T,No,No,Pl,SR @ 239.8-240.0', 240.0-240.3'	
										240.5				241		340		0°,J,VN,No,No,Pl,SR @ 241.5'	
														242		339		60°,J,T,No,No,Pl,SR @ 242.3-242.7' 90°,J,VN,No,No,Ir,SR @ 242.5-242.7'	
							HQ	53	5.0	3.8	1.9	76	38	243		338		0°,J,VN,No,No,Pl,SR @ 242.55', 242.65' 65°,J,T,No,No,Pl,SR @ 243.1-243.4' 0°,J,VN,No,No,Pl,SR @ 243.4', 243.8'	
														244		337		90°,J,VN,No,No,Pl,SR @ 243.8-244.1'	
														245		336		0°,J,VN,No,No,Pl,SR @ 244.3'	
										245.5				246		335		0°,J,VN,No,No,Pl,SR @ 246.4', 246.65'	
														247		334		0°,J,VN,No,No,Pl,SR @ 247.4'	
							HQ	54	5.0	5.0	4.0	100	80	248		333		90°,J,T,No,No,Pl,SR @ 247.4-247.75' 0°,J,VN,No,No,Pl,SR @ 247.65', 250.05' 30°,J,T,No,No,Pl,SR @ 247.8-248.0', 248.7-248.85'	
														249		332			
														250		331			
										250.5				251		330			
														252		329		251.7 DOLOMITE; gray; micritic; fresh; strong; hard; (Salina Group - Unit E). 0°,J,VN,No,No,Pl,SR @ 251.9', 252.1', 252.2', 252.3', 252.4' 90°,J,T,No,No,Pl,SR @ 252.4-252.5'	
							HQ	55	5.0	1.5	0.0	30	0	253		328			Driller reported rapid advancement @ 252.5-255.3'.
														254		327			
														255		326			

BLACK & VEATCH

BORING LOG

BORING NO. RB-C9

CLIENT	PROJECT	PROJECT NO.
Detroit Edison	Fermi 3 COL Application	147483

PROJECT LOCATION	COORDINATES	GROUND ELEVATION (DATUM)	TOTAL DEPTH
Monroe, MI	N 6112.4' E 4616.0'	580.9 ft (NAVD 88)	270.5 (feet)

SURFACE CONDITIONS	COORDINATE SYSTEM	DATE START	DATE FINISHED
Gravel parking lot near laydown area	Plant	06/14/07	07/15/07

LOGGED BY	CHECKED BY	APPROVED BY
Grainger/Bonnie TB	Dogbey/Bonnie TB	Meyer

SAMPLING							CORING									
SAMPLE TYPE	SAMPLE NUMBER	SET 6 INCHES	2ND 6 INCHES	3RD 6 INCHES	N VALUE	SAMPLE RECOVERY	CORE SIZE	RUN NUMBER	RUN LENGTH	RUN RECOVERY	RQD RECOVERY	PERCENT RECOVERY	RQD	DEPTH (FEET)	SAMPLE TYPE	ELEVATION (FEET)	GRAPHIC LOG	CLASSIFICATION OF MATERIALS	REMARKS
														255					
										255.5				256		325			Core box #14 starts @ 255.5'.
														257		324		0°,J,VN,Cl,Pa,Pl,SR @ 256.4', 256.6', 257.2' grades w/gypsum banding @ 256.8' 0°,J,VN,No,No,Pl,SR @ 256.8', 257.5', 257.6'	
							HQ	56	5.0	4.5	2.2	90	44	258		323		0°,J,VN,No,No,Pl,SR @ 258.0', 258.15'	
														259		322		258.7 DOLOMITE; light brownish gray; micritic; fresh; strong; moderately hard; w/gypsum clasts & shale parting; (Salina Group - Unit E). 0°,J,VN,No,No,Pl,SR @ 258.7',259.1'	
														260		321		259.2 DOLOMITE; gray; micritic; fresh; strong; hard; w/stylolites; (Salina Group - Unit E). 0°,J,VN,No,No,Pl,SR @ 259.3',259.4',259.5', 259.7', 259.8' 90°,J,T,No,No,Pl,SR @ 259.4-259.5' 0°,J,VN,No,No,Pl,SR @ 260.3', 260.4' 0°,J,VN,No,No,Pl,SR @ 260.8', 261.3', 261.5' 10°,J,VN,No,No,Pl,SR @ 261.1'	
										260.5				261		320			
														262		319			
							HQ	57	5.0	5.0	3.6	100	72	263		318		261.6 DOLOMITE; light brownish gray; hard; w/gypsum clasts & shale partings; (Salina Group - Unit E). 262.1 DOLOMITE; gray; micritic; fresh; strong; hard; (Salina Group - Unit E). 55°,J,VN,No,No,Pl,SR @ 262.2-262.5' 0°,J,VN,No,No,Pl,SR @ 262.4', 262.5'	
														264		317			
														265		316		262.5 DOLOMITE; light brownish gray; micritic; fresh; strong; w/gypsum band & shale partings; (Salina Group - Unit E). 0°,J,VN,No,No,Pl,SR @ 263.1', 263.9', 264.5'	
										265.5				266		315		0°,J,VN,No,No,Pl,SR @ 265.5', 265.8', 266.9'	
														267		314		0°,J,VN,No,No,Pl,SR @ 267.2', 267.7', 267.8'	
							HQ	58	5.0	5.0	4.5	100	90	268		313		267.8 DOLOMITE; gray; micritic; fresh; strong; hard; w/ shale partings; (Salina Group - Unit E).	
														269		312		0°,J,VN,No,No,Pl,SR @ 268.7', 269.4', 269.5', 269.7', 270.1'	
														270		311			

BLACK & VEATCH

BORING LOG

BORING NO. RB-C9

CLIENT	PROJECT	PROJECT NO.
Detroit Edison	Fermi 3 COL Application	147483

PROJECT LOCATION	COORDINATES	GROUND ELEVATION (DATUM)	TOTAL DEPTH
Monroe, MI	N 6112.4' E 4616.0'	580.9 ft (NAVD 88)	270.5 (feet)

SURFACE CONDITIONS	COORDINATE SYSTEM	DATE START	DATE FINISHED
Gravel parking lot near laydown area	Plant	06/14/07	07/15/07

LOGGED BY	CHECKED BY	APPROVED BY
Grainger/Bonnie TB	Dogbey/Bonnie TB	Meyer

SAMPLING: SAMPLE TYPE | SAMPLE NUMBER | SET 6 INCHES | 2ND 6 INCHES | 3RD 6 INCHES | N VALUE | SAMPLE RECOVERY

CORING: CORE SIZE | RUN NUMBER | RUN LENGTH | RUN RECOVERY | RQD RECOVERY | PERCENT RECOVERY | RQD

DEPTH (FEET)	SAMPLE TYPE	ELEVATION (FEET)	GRAPHIC LOG	CLASSIFICATION OF MATERIALS	REMARKS
270					
271		310			Bottom of boring @ 270.5'. Water level @ 24.6' at completion of drilling. Backfilled w/ bentonite chips to 40' below ground surface on 09/07/07. Continued w/ bentonite chips to 5' below ground surface then gravel to surface on 09/12/07.
272		309			
273		308			
274		307			
275		306			
276		305			
277		304			
278		303			
279		302			
280		301			
281		300			
282		299			
283		298			
284		297			
285		296			

BLACK & VEATCH

BORING LOG

BORING NO. RB-C10

CLIENT	PROJECT	PROJECT NO.
Detroit Edison	Fermi 3 COL Application	147483

PROJECT LOCATION	COORDINATES	GROUND ELEVATION (DATUM)	TOTAL DEPTH
Monroe, MI	N 6050.7' E 4451.3'	581.1 ft (NAVD 88)	271.3 (feet)

SURFACE CONDITIONS	COORDINATE SYSTEM	DATE START	DATE FINISHED
Earth berm	Plant	08/14/07	08/25/07

LOGGED BY	CHECKED BY	APPROVED BY
Bonnie TB	Dogbey/Bonnie TB	Meyer EM

SAMPLING							CORING									
SAMPLE TYPE	SAMPLE NUMBER	SET 6 INCHES	2ND 6 INCHES	3RD 6 INCHES	N VALUE	SAMPLE RECOVERY	CORE SIZE	RUN NUMBER	RUN LENGTH	RUN RECOVERY	RQD RECOVERY	PERCENT RECOVERY	RQD	DEPTH (FEET)	SAMPLE TYPE	ELEVATION (FEET)	GRAPHIC LOG	CLASSIFICATION OF MATERIALS	REMARKS
SPT	1	50/5	-	-	50+	0.3								0		581		SILT (MH) - About 100% low plasticity, low toughness, no dilatancy, low dry strength fines; dark grayish brown; very soft; dry; (Fill).	Boring advanced w/4¼" ID; 8" OD hollow stem augers. SPT performed w/ BK81 automatic hammer.
														0.3				Well graded GRAVEL (GW) - About 90% fine to coarse, subangular to angular, hard gravel w/max. size 2"; about 5% sand; about 5% fines; (Fill).	
														1		580			
														2		579			
														3		578			
														4		577			
														5		576			
SPT	2	3	4	3	7	0.4								6		575			
														7		574			
														8		573			
														9		572			
														10		571			
SPT	3	1	7	8	15	0.4								11		570			
														12		569			
														13		568			
														13.8				Fat CLAY (CH) - About 90% high plasticity, high toughness, no dilatancy fines; trace fine to coarse sand; trace angular gravel w/max. size ½"; gray; hard; moist; firm; homogeneous; slight reaction w/HCl	Change in drill reaction @ 13.8'.
														14		567			
														15					

BLACK & VEATCH

BORING LOG

BORING NO. RB-C10

CLIENT	PROJECT	PROJECT NO.
Detroit Edison	Fermi 3 COL Application	147483

PROJECT LOCATION	COORDINATES	GROUND ELEVATION (DATUM)	TOTAL DEPTH
Monroe, MI	N 6050.7' E 4451.3'	581.1 ft (NAVD 88)	271.3 (feet)

SURFACE CONDITIONS	COORDINATE SYSTEM	DATE START	DATE FINISHED
Earth berm	Plant	08/14/07	08/25/07

LOGGED BY	CHECKED BY	APPROVED BY
Bonnie TB	Dogbey/Bonnie TB	Meyer EM

SAMPLING							CORING									
SAMPLE TYPE	SAMPLE NUMBER	SET 6 INCHES	2ND 6 INCHES	3RD 6 INCHES	N VALUE	SAMPLE RECOVERY	CORE SIZE	RUN NUMBER	RUN LENGTH	RUN RECOVERY	RQD RECOVERY	PERCENT RECOVERY	RQD	DEPTH (FEET)	SAMPLE TYPE	ELEVATION (FEET)	GRAPHIC LOG	CLASSIFICATION OF MATERIALS	REMARKS
SPT	4	4	6	9	15	1.2								15		566			
														16		565			PP = 1.5 STF @ 16.0'.
														17		564			
														18		563			
TW	5					2.0								19		562			
																			PP = 1.8 TSF @ 19.5'.
														20		561			
SPT	6	2	2	6	8	1.5								21		560			
														22		559		Lean CLAY (CL) - About 95% medium plasticity, medium toughness, no dilatancy fines; 5% subangular to angular sand; brown; firm; moist; strong reaction w/HCl; homogeneous; (Glacial Till).	
																		grades trace cobbles @ 22.5'	Driller reported possible cobble @ 22.5'.
														23		558			
TW	7					1.1								24		557			
														25		556		25.0	
SPT	8	44	40	30	70	1.5								26		555		Lean CLAY with Sand (CL) - About 75% medium plasticity, medium toughness, no dilatancy fines; about 15% fine to coarse, angular to subangular sand; about 10% fine, subangular gravel, fractured w/1 hammer blow; gray to grayish brown; moist; strong reaction w/HCl; homogeneous.	TV = 1.3 TSF @ 25.0'. PP = 4.0 TSF @ 25.0'.
														27		554			
			27.4															27.4	
HQ	1	1.6	1.6	1.6	100	100								28		553		DOLOMITE; grayish brown & dark gray, mottled; micritic; fresh; strong; hard; (Bass Islands Group). 90°,J,T,No,No,Pl,SR @ 27.8-27.95' 0°,J,Cl,Sp,VN,Ir,R @ 27.95', 28.65'	Auger refusal @ 27.4'. Set nominal 6" temporary steel casing to 28.0'. Below 27.4' continued w/ triple tube wire line core barrel
																		28.6	
			29.0											29		552		DOLOMITE; dark gray; micritic; fresh; strong; hard; w/stylolites; slightly mottled; (Bass Islands Group). 0°,B,VN,UK,Sp,Pl,SR @ 29.5', 29.6', 29.7', 30.15'	
														30					

BLACK & VEATCH

BORING LOG

BORING NO. RB-C10
SHEET 3 OF 19

CLIENT	PROJECT	PROJECT NO.
Detroit Edison	Fermi 3 COL Application	147483

PROJECT LOCATION	COORDINATES	GROUND ELEVATION (DATUM)	TOTAL DEPTH
Monroe, MI	N 6050.7' E 4451.3'	581.1 ft (NAVD 88)	271.3 (feet)

SURFACE CONDITIONS	COORDINATE SYSTEM	DATE START	DATE FINISHED
Earth berm	Plant	08/14/07	08/25/07

LOGGED BY	CHECKED BY	APPROVED BY
Bonnie TB	Dogbey/Bonnie TB	Meyer

SAMPLING							CORING									
SAMPLE TYPE	SAMPLE NUMBER	SET 6 INCHES	2ND 6 INCHES	3RD 6 INCHES	N VALUE	SAMPLE RECOVERY	CORE SIZE	RUN NUMBER	RUN LENGTH	RUN RECOVERY	RQD RECOVERY	PERCENT RECOVERY	RQD	DEPTH (FEET)	SAMPLE TYPE	ELEVATION (FEET)	GRAPHIC LOG	CLASSIFICATION OF MATERIALS	REMARKS
														30		551		w/diamond bit using water as drilling fluid. Core box #1 starts @ 27.4'.	
							HQ	2	5.0	5.0	2.9	100	58	31		550		90°,J,T,No,No,Pl,SR @ 31.25-31.55', 31.5-31.55', 32.5-34.0'	
														32		549		0°,B,VN,UK,Sp,Pl,SR @ 31.3', 31.55', 31.6'	
														33		548		0°,B,VN,UK,Sp,Pl,SR @ 32.5', 32.8', 33.0', 33.2', 33.3'	
																		33.5	
										34.0				34		547		DOLOMITE; dark grayish brown & grayish brown; micritic; fresh; strong; hard; (Bass Islands Group).	
														35		546		0°,B,VN,No,No,Pl,SR @ 34.8', 35.2'	
														36		545		0°,B,VN,UK,Sp,Pl,SR @ 35.7', 36.2'	
							HQ	3	5.0	5.0	3.75	100	75	37		544		convoluted bedding @ 36.7-37.3'	
														38		543		0°,J,T,No,No,Ir,R @ 37.5' 90°,J,T,No,No,Pl,SR @ 37.5-37.9' grades light gray @ 37.8' 0°,B,VN,UK,Sp,Pl,SR @ 37.9' 70°,J,T,No,No,Pl,SR @ 38.1-34.4' 0°,B,VN,No,No,Pl,SR @ 38.3', 38.5'	
																		38.5	
										39.0				39		542		DOLOMITE; light gray & very dark gray, mottled; micritic; fresh; strong; hard; (Bass Islands Group). 80°,J,T,No,No,Pl,SR @ 39.3-39.9'	Water level @ 8.3' prior to drilling on 08/16/07. Core box #2 starts @ 39.0'.
														40		541			
														41		540		0°,B,VN,No,No,Pl,SR @ 40.7', 41.1'	
																		41.1	
							HQ	4	5.0	4.6	3.5	92	70	42		539		DOLOMITE; dark grayish brown; micritic; fresh; strong; hard; w/pitted zones, stylolites & shale partings; (Bass Islands Group). pitted @ 41.3-41.7' 70°,J,T,No,No,Pl,SR @ 41.6-41.9' pitted @ 42.15-42.25' pitted @ 42.35-42.4'	
														43		538		shale parting - 0°,B,VN,Pl,SR @ 42.5' pitted @ 42.6-42.65' pitted @ 42.7-42.75' pitted @ 42.85-43.05'	
										44.0				44		537		0°,B,VN,No,No,Pl,SR @ 43.3' shale parting @ 43.5' 0°,B,VN,No,No,Pl,SR @ 44.2' 70°,J,T,No,No,Pl,SR @ 44.7-45.6'	
														45					

BLACK & VEATCH

BORING LOG

BORING NO. RB-C10

CLIENT	PROJECT	PROJECT NO.
Detroit Edison	Fermi 3 COL Application	147483

PROJECT LOCATION	COORDINATES	GROUND ELEVATION (DATUM)	TOTAL DEPTH
Monroe, MI	N 6050.7' E 4451.3'	581.1 ft (NAVD 88)	271.3 (feet)

SURFACE CONDITIONS	COORDINATE SYSTEM	DATE START	DATE FINISHED
Earth berm	Plant	08/14/07	08/25/07

LOGGED BY	CHECKED BY	APPROVED BY
Bonnie TB	EM SF Dogbey/Bonnie TB	EM Meyer

SAMPLING							CORING									
SAMPLE TYPE	SAMPLE NUMBER	SET 6 INCHES	2ND 6 INCHES	3RD 6 INCHES	N VALUE	SAMPLE RECOVERY	CORE SIZE	RUN NUMBER	RUN LENGTH	RUN RECOVERY	RQD RECOVERY	PERCENT RECOVERY	RQD	DEPTH (FEET)	SAMPLE TYPE	ELEVATION (FEET)	GRAPHIC LOG	CLASSIFICATION OF MATERIALS	REMARKS
														45		536		0°,B,VN,No,No,Pl,SR @ 45.0', 45.2'	
														46		535		70°,J,T,No,No,Pl,SR @ 45.9-46.9'	
							HQ	5	5.0	4.6	0.3	92	6					0°,B,VN,No,No,Pl,SR @ 46.2', 46.6', 46.7', 46.85'	
														47		534		0°,B,VN,No,No,Pl,SR @ 47.0', 47.1', 47.4', 47.7'	
														48		533		50°,J,T,No,No,Pl,SR @ 47.7-48.0' fractured @ 48.0-48.3'	
																		0°,B,VN,No,No,Pl,SR @ 48.5'	
										49.0				49		532		anhydrite @ 49.2' shale parting @ 49.5'	
														50		531		shale partings - 0°,B,T,SR @ 49.6',49.8',49.9',50.3' 90°,J,T,No,No,Pl,SR @ 50.0-50.4', 51.0-52.0'	
														51		530			
							HQ	6	5.0	5.0	1.0	100	20						
														52		529		shale partings - 0°,B,T,SR @ 51.9' 70°,J,T,No,No,Pl,R @ 52.0-53.1', 52.1-52.3' shale partings - 0°,B,T,SR @ 52.1',52.8',53.5',53.8'	
														53		528		50°,J,T,No,No,Pl,SR @ 52.5-53.0'	
																		70°,J,T,No,No,Pl,R @ 53.3-53.5'	
														54		527		53.5 DOLOMITE; oolitic; grayish brown; very fine grained; fresh; strong; hard; (Bass Islands Group). 60°,J,T,No,No,Pl,SR @ 53.8-54.0'	Core box #3 starts @ 54.0'.
										54.0				55		526			
																		30°,J,T,No,No,Pl,SR @ 55.3-55.5', 55.5-55.65', 55.7-55.85'	
														56		525			
							HQ	7	5.0	5.0	2.7	100	54					56.5 DOLOMITE; grayish brown; micritic; fresh; strong; hard; (Bass Islands Group). 0°,B,VN,No,No,Pl,SR @ 56.5', 58.5', 58.9' 30°,J,T,No,No,Pl,SR @ 56.6-56.7', 57.2-57.3' fractured @ 56.8-57.1' very fine grained @ 57.3-57.4' 10°,J,T,No,No,Pl,SR @ 57.5', 57.7' mottled dolomite @ 57.7-58.0' shale parting @ 58.0-58.05' 90°,J,T,No,No,Pl,SR @ 58.05-58.2' banded @ 58.4-58.5' grades light grayish brown @ 59.3' convoluted bedding @ 59.3-60.5'	
														57		524			
														58		523			
														59		522			
										59.0				60					

BLACK & VEATCH

BORING LOG

BORING NO. RB-C10

SHEET 5 OF 19

CLIENT	PROJECT	PROJECT NO.
Detroit Edison	Fermi 3 COL Application	147483

PROJECT LOCATION	COORDINATES	GROUND ELEVATION (DATUM)	TOTAL DEPTH
Monroe, MI	N 6050.7' E 4451.3'	581.1 ft (NAVD 88)	271.3 (feet)

SURFACE CONDITIONS	COORDINATE SYSTEM	DATE START	DATE FINISHED
Earth berm	Plant	08/14/07	08/25/07

LOGGED BY	CHECKED BY	APPROVED BY
Bonnie TB	Dogbey/Bonnie TB	Meyer

SAMPLING							CORING										
SAMPLE TYPE	SAMPLE NUMBER	SET 6 INCHES	2ND 6 INCHES	3RD 6 INCHES	N VALUE	SAMPLE RECOVERY	CORE SIZE	RUN NUMBER	RUN LENGTH	RUN RECOVERY	RQD RECOVERY	PERCENT RECOVERY	RQD	DEPTH (FEET)	SAMPLE TYPE	ELEVATION (FEET)	GRAPHIC LOG	CLASSIFICATION OF MATERIALS	REMARKS
														60		521		0°,B,VN,UK,Sp,Pl,SR @ 59.4', 59.6', 59.8', 60.1' brecciated, healed @ 60.3-60.4'	
																		60.5 DOLOMITE; argillaceous; grayish brown; micritic; fresh; strong; hard; banded; (Bass Islands Group).	
							HQ	8	5.0	4.8	3.4	96	68	61		520		0°,B,VN,UK,Sp,Pl,SR @ 60.6', 61.8', 63.8'	
														62		519		10°,J,VN,UK,Sp,Pl,SR @ 62.4', 62.5', 62.65', 62.75'	
														63		518		62.9 DOLOMITE; grayish brown; micritic; fresh; strong; hard; w/stylolites; (Bass Islands Group).	
																		10°,J,VN,UK,Sp,Pl,SR @ 63.2'	
										64.0				64		517		0°,B,VN,UK,Sp,Pl,SR @ 64.2', 64.5', 64.8', 65.0', 65.25', 65.35', 65.55', 65.8' fractured @ 64.5-64.9'	
														65		516		90°,J,T,No,No,Pl,SR @ 65.0-66.0', 65.25-65.3', 65.35-65.4' highly fractured @ 65.6-65.7'	
							HQ	9	5.0	5.0	3.0	100	60	66		515		60°,J,T,No,No,Pl,SR @ 66.0-66.3'	
														67		514			
														68		513		0°,B,VN,UK,Sp,Pl,SR @ 67.65', 67.8', 67.9'	Core box #4 starts @ 67.9'.
										69.0				69		512			
														70		511		60°,J,T,No,No,Pl,SR @ 69.8-70.2'	
																		70.8 DOLOMITE; grayish brown; micritic; fresh; strong; hard; banded; w/stylolites; (Bass Islands Group).	
							HQ	10	5.0	4.8	3.8	96	76	71		510		20°,J,T,No,No,Pl,SR @ 71.2-71.3', 71.7-71.9', 72.0-72.2'	
														72		509		90°,J,T,No,No,WA,SR @ 71.7-72.0'	
														73		508		20°,J,T,No,No,Pl,SR @ 73.1-73.3' 0°,B,T,No,No,Pl,SR @ 73.1'	
										74.0				74		507			
														75					

BLACK & VEATCH

BORING LOG

BORING NO. RB-C10

CLIENT	PROJECT	PROJECT NO.
Detroit Edison	Fermi 3 COL Application	147483

PROJECT LOCATION	COORDINATES	GROUND ELEVATION (DATUM)	TOTAL DEPTH
Monroe, MI	N 6050.7' E 4451.3'	581.1 ft (NAVD 88)	271.3 (feet)

SURFACE CONDITIONS	COORDINATE SYSTEM	DATE START	DATE FINISHED
Earth berm	Plant	08/14/07	08/25/07

LOGGED BY	CHECKED BY	APPROVED BY
Bonnie TB	Dogbey/Bonnie TB	Meyer

SAMPLING							CORING									
SAMPLE TYPE	SAMPLE NUMBER	SET 6 INCHES	2ND 6 INCHES	3RD 6 INCHES	N VALUE	SAMPLE RECOVERY	CORE SIZE	RUN NUMBER	RUN LENGTH	RUN RECOVERY	RQD RECOVERY	PERCENT RECOVERY	RQD	DEPTH (FEET)	SAMPLE TYPE	ELEVATION (FEET)	GRAPHIC LOG	CLASSIFICATION OF MATERIALS	REMARKS
														75		506			
														76		505		60°,J,T,Ca,Fi,Pl,SR @ 75.7-75.9'	
																		0°,B,T,No,No,Pl,SR @ 76.3', 77.5'	
							HQ	11	5.0	5.0	3.7	100	74	77		504		10°,J,VN,Cl,Fi,WA,SR @ 76.8' slightly brecciated, healed @ 77.0-77.3'	
																		10°,J,VN,No,No,Pl,SR @ 77.6'	
														78		503		77.7 DOLOMITE; grayish brown; micritic; fresh; strong; hard; banded; (Bass Islands Group). 20°,J,T,No,No,Pl,SR @ 76.7-76.9' 90°,J,T,No,No,Pl,SR @ 77.8-78.5', 76.9-77.1' 0°,B,T,No,No,Pl,SR @ 78.85' 70°,J,T,No,No,Pl,SR @ 79.3-79.8'	
										79.0				79		502			Water level @ 16.1' prior to drilling on 08/21/07.
														80		501		shale parting - 10°,B,N,Pl,SR @ 80.1'	
																		80.2 SHALE; black; fresh; weak; low hardness; (Bass Islands Group). interbedded w/dolomite @ 80.55-80.65'	
							HQ	12	5.0	5.0	3.4	100	68	81		500		80.7 DOLOMITE; grayish brown; micritic; fresh; strong; hard; banded; (Bass Islands Group). 0°,J,VN,Cl,Sp,Pl,SR @ 81.95' 90°J,T,No,No,WA,R @ 81.95-82.9'	Core box #5 starts @ 81.3'.
														82		499			
														83		498			
										84.0				84		497			
																		84.6 DOLOMITE; grayish brown; micritic; fresh; strong; hard; w/brecciated zones & stylolites; (Bass Islands Group). brecciated, healed @ 85.2-85.5'	
														85		496			
														86		495		70°,J,T,No,No,Ir,SR @ 85.9-86.3', 88.1-88.4'	
							HQ	13	5.0	5.0	3.3	100	66					0°,J,VN,Ca,Sp,Pl,S @ 86.5'	
														87		494		brecciated, healed @ 86.5-86.9', 87.2-87.5' 45°,J,T,No,No,Pl,SR @ 86.9-87.0', 87.4-87.5'	
																		10°,J,T,Cl,Sp,Pl,SR @ 87.5'	
														88		493		0°,J,T,No,No,Pl,SR @ 88.1'	
										89.0				89		492			
																		40°,J,T,No,No,Pl,SR @ 89.0-89.2' 60°,J,T,No,No,Pl,SR @ 89.2-89.4'	
														90				90°,J,T,No,No,Pl,SR @ 89.7-89.8'	

BLACK & VEATCH **BORING LOG**

BORING NO. RB-C10
SHEET 7 OF 19

CLIENT	PROJECT	PROJECT NO.
Detroit Edison	Fermi 3 COL Application	147483

PROJECT LOCATION	COORDINATES	GROUND ELEVATION (DATUM)	TOTAL DEPTH
Monroe, MI	N 6050.7' E 4451.3'	581.1 ft (NAVD 88)	271.3 (feet)

SURFACE CONDITIONS	COORDINATE SYSTEM	DATE START	DATE FINISHED
Earth berm	Plant	08/14/07	08/25/07

LOGGED BY	CHECKED BY	APPROVED BY
Bonnie TB	Dogbey/Bonnie TB	Meyer

SAMPLING							CORING										CLASSIFICATION OF MATERIALS	REMARKS
SAMPLE TYPE	SAMPLE NUMBER	SET 6 INCHES	2ND 6 INCHES	3RD 6 INCHES	N VALUE	SAMPLE RECOVERY	CORE SIZE	RUN NUMBER	RUN LENGTH	RUN RECOVERY	RQD RECOVERY	PERCENT RECOVERY	RQD	DEPTH (FEET)	SAMPLE TYPE	ELEVATION (FEET)	GRAPHIC LOG	
														90		491		0°,J,VN,No,No,Ir,R @ 89.7' 10°,J,VN,Cl,Sp,WA,SR @ 89.9' 70°,J,VN,No,No,Pl,SR @ 90.1-90.2' 0°,J,VN,No,No,Pl,SR @ 90.5' brecciated, healed @ 91.0-91.3'
							HQ	14	5.0	5.0	3.5	100	70	91		490		91.3 DOLOMITE; grayish brown; micritic; fresh; strong; hard; banded; w/stylolites; (Bass Islands Group). cross-bedding @ 40° @ 91.65-91.9' 0°,J,T,Cl,Sp,Pl,SR @ 92.0', 92.3', 93.0', 93.3' 90°,J,T,No,No,Pl,SR @ 92.05-92.3'
														92		489		
														93		488		
										94.0				94		487		0°,B,VN,No,No,Pl,SR @ 94.2', 94.5', 94.9' — Core box #6 starts @ 94.0'.
							HQ	15	5.0	4.9	2.7	98	54	95		486		dolomite; argillaceous; dark gray; micritic; fresh; strong; hard @ 94.9-95.3' 10°,J,VN,No,No,Pl,SR @ 95.0' fractured @ 95.2-95.3', 96.4-96.5' grades dark grayish brown @ 95.3' 70°,J,T,No,No,Ir,S @ 95.4-95.5' brecciated, healed @ 95.7-95.8' 0°,B,VN,No,No,Pl,SR @ 96.0', 96.3', 96.4'
														96		485		
														97		484		grades grayish brown @ 97.1' 10°,J,VN,No,No,Pl,SR @ 97.4'
														98		483		
														99		482		10°,J,VN,No,No,Pl,SR @ 98.5',98.9'
										99.0								fractured @ 99.1-99.3'
														100		481		70°,J,T,No,No,Pl,SR @ 99.5-99.7' shale partings - 0°,B,T,Pl,SR @ 99.7',100.6'
							HQ	16	5.0	4.8	3.1	96	62	101		480		0°,B,T,No,No,Pl,SR @ 100.5' 70°,J,T,No,No,Pl,SR @ 100.6-100.8' 90°,J,VN,Cl,Sp,Pl,SR @ 100.6-101.4' shale partings - 0°,B,T,Pl,SR @ 101.2', 101.4'
														102		479		90°,J,T,No,No,Pl,SR @ 101.75-101.85' 0°,B,T,No,No,Pl,SR @ 101.85'
														103		478		
										104.0				104		477		shale parting - 0°,B,T,Pl,SR @ 103.7'
														105				80°,J,VN,No,No,Pl,SR @ 104.3-104.7' 10°,J,VN,No,No,Pl,SR @ 104.5', 104.7', 104.8', 104.9'

BLACK & VEATCH

BORING LOG

BORING NO. RB-C10

CLIENT	PROJECT	PROJECT NO.
Detroit Edison	Fermi 3 COL Application	147483

PROJECT LOCATION	COORDINATES	GROUND ELEVATION (DATUM)	TOTAL DEPTH
Monroe, MI	N 6050.7' E 4451.3'	581.1 ft (NAVD 88)	271.3 (feet)

SURFACE CONDITIONS	COORDINATE SYSTEM	DATE START	DATE FINISHED
Earth berm	Plant	08/14/07	08/25/07

LOGGED BY	CHECKED BY	APPROVED BY
Bonnie TB	Dogbey/Bonnie TB	Meyer Em

SAMPLE TYPE	SAMPLE NUMBER	SET 6 INCHES	2ND 6 INCHES	3RD 6 INCHES	N VALUE	SAMPLE RECOVERY	DEPTH (FEET)	ELEVATION (FEET)	CLASSIFICATION OF MATERIALS	REMARKS
							105	476		
									10°,J,VN,No,No,Pl,SR @ 105.7', 107.1'	
							106	475	105.8 DOLOMITE; grayish brown; micritic; fresh; strong; hard; w/stylolites; (Bass Islands Group).	
HQ	17	5.0	4.3	3.3	86	66			0°,J,N,Ca,Fi,Pl,SR @ 105.8'	
							107	474	20°,J,VN,Cl,Sp,Pl,SR @ 105.9' 30°,J,VN,No,No,Pl,SR @ 107.0'	
							108	473	50°,J,VN,No,No,Pl,SR @ 107.9-108.1'	
			109.0				109	472		Core box #7 starts @ 109.0'.
							110	471		
							111	470	50°,J,VN,No,No,Pl,SR @ 110.7-110.9', 111.2-111.4' fractured @ 110.8-111.3'	
HQ	18	5.0	4.1	1.7	82	34			90°,J,T,anhydrite,Pa,Pl,SR @ 111.6-113.1'	
							112	469	0°,J,VN,No,No,Pl,SR @ 111.6' 30°,J,VN,No,No,Pl,SR @ 111.7-112.0' 0°,J,VN,Ca,Sp,Pl,SR @ 112.1', 112.3', 112.6' fractured @ 112.3-112.7'	
							113	468	0°,J,VN,No,No,Pl,SR @ 112.9', 113.0', 113.1'	
			114.0				114	467		
									114.5 DOLOMITE; argillaceous; dark gray & grayish brown, banded; micritic; fresh; strong; hard; w/shale partings; (Salina Group - Unit F).	
							115	466	shale parting @ 115.2'	
							116	465	shale parting @ 116.0'	
HQ	19	5.0	2.9	0.4	58	8			shale partings - 0°,B,VN,Pl,SR @ 116.7',117.05', 117.3',117.4',117.7',117.9'	
							117	464	90°,J,T,Ca,Pa,Pl,SR @ 116.7-119.0'	
							118	463	50°,J,T,No,No,Pl,SR @ 118.1-118.3' shale partings - 0°,B,VN,Pl,SR @ 118.3',118.7'	
			119.0				119	462		
							120			

5/22/2008 9:25 AM DTE - Fermi 3 Geotech

BLACK & VEATCH **BORING LOG**

BORING NO. RB-C10
SHEET 9 OF 19

CLIENT	PROJECT	PROJECT NO.
Detroit Edison	Fermi 3 COL Application	147483

PROJECT LOCATION	COORDINATES	GROUND ELEVATION (DATUM)	TOTAL DEPTH
Monroe, MI	N 6050.7' E 4451.3'	581.1 ft (NAVD 88)	271.3 (feet)

SURFACE CONDITIONS	COORDINATE SYSTEM	DATE START	DATE FINISHED
Earth berm	Plant	08/14/07	08/25/07

LOGGED BY	CHECKED BY	APPROVED BY
Bonnie TB	Dogbey/Bonnie TB	Meyer

SAMPLING: SAMPLE TYPE	SAMPLE NUMBER	SET 6 INCHES	2ND 6 INCHES	3RD 6 INCHES	N VALUE	SAMPLE RECOVERY	CORING: CORE SIZE	RUN NUMBER	RUN LENGTH	RUN RECOVERY	RQD RECOVERY	PERCENT RECOVERY	RQD	DEPTH (FEET)	SAMPLE TYPE	ELEVATION (FEET)	GRAPHIC LOG	CLASSIFICATION OF MATERIALS	REMARKS
HQ	20	5.0	1.0	0.0	20	0								120		461		anhydrite @ 122.2-122.5'	
														121		460			
														122		459			
														123		458		123.0 DOLOMITE; argillaceous; micritic; pale brown; fresh; strong; hard; (Salina Group - Unit F).	
HQ	21	2.5	124.0 1.5	0.4	60	16								124		457			
														125		456		125.5 CLAYSTONE; dark gray to grayish brown; fresh to slightly weathered; weak to moderately strong; low hardness to moderately hard; w/dolomite layers/ seams; (Salina Group - Unit F). dolomite @ 125.5-125.8'	
														126		455			
HQ	22	2.5	126.5 1.6	0.4	64	16								127		454			
														128		453		0°,J,VN,No,No,Pl,SR @ 127.9' dolomite; gray; micritic; fresh; strong; hard @ 128.2-128.6' 10°,J,VN,No,No,WA,SR @ 128.2' 0°,J,VN,No,No,Pl,SR @ 128.6'	
HQ	23	2.5	129.0 2.0	0.0	80	0								129		452			Core box #8 starts @ 129.0'
														130		451		129.9 DOLOMITE; gray; (Salina Group - Unit F) 0°,J,VN,No,No,Pl,SR @ 130.0', 130.4', 130.5' 50°,J,VN,No,No,Pl,SR @ 130.15-130.4'	
														131		450		130.5 CLAYSTONE; gray; fresh to slightly weathered; weak to moderately strong; low hardness to moderately hard; w/dolomite layers/seams; (Salina Group - Unit F).	
HQ	24	2.5	131.5 1.4	0.0	56	0								132		449			
														133		448		dolomite; gray @ 132.4-132.8' 90°,J,T,No,No,Pl,SR @ 132.4-132.7' 0°,J,T,No,No,Pl,SR @ 132.65', 132.7', 132.45' calcite filled vug in dolomite @ 132.75'	
			134.0											134		447			
														135					

5/22/2008 9:25 AM DTE - Fermi 3 Geotech

BLACK & VEATCH

BORING LOG

BORING NO. RB-C10

CLIENT	PROJECT	PROJECT NO.
Detroit Edison	Fermi 3 COL Application	147483

PROJECT LOCATION	COORDINATES	GROUND ELEVATION (DATUM)	TOTAL DEPTH
Monroe, MI	N 6050.7' E 4451.3'	581.1 ft (NAVD 88)	271.3 (feet)

SURFACE CONDITIONS	COORDINATE SYSTEM	DATE START	DATE FINISHED
Earth berm	Plant	08/14/07	08/25/07

LOGGED BY	CHECKED BY	APPROVED BY
Bonnie TB	Dogbey/Bonnie TB	Meyer EM

SAMPLING							CORING									
SAMPLE TYPE	SAMPLE NUMBER	SET 6 INCHES	2ND 6 INCHES	3RD 6 INCHES	N VALUE	SAMPLE RECOVERY	CORE SIZE	RUN NUMBER	RUN LENGTH	RUN RECOVERY	RQD RECOVERY	PERCENT RECOVERY	RQD	DEPTH (FEET)	SAMPLE TYPE	ELEVATION (FEET)	GRAPHIC LOG	CLASSIFICATION OF MATERIALS	REMARKS
HQ	25	2.5	0.7	0.0	28	0								135		446			
														136		445			
			136.5											137		444			
HQ	26	2.5	0.5	0.0	20	0								138		443			
			139.0											139		442			
HQ	27	2.5	0.5	0.0	20	0								140		441			
			141.5											141		440			
HQ	28	2.5	1.2	0.5	48	20								142		439			
														143		438			
			144.0											144		437			
HQ	29	2.5	0.4	0.0	16	0								145		436			
														146		435			
			146.5											147		434			
HQ	30	2.5	0.8	0.0	32	0								148		433			
			149.0											149		432			
														150					

137.5

DOLOMITE; gray; (Salina Group - Unit F)
90°,J,T,No,No,Pl,SR @ 137.5-137.9'
0°,J,T,No,No,Pl,SR @ 137.7'
40°,J,T,No,No,Pl,SR @ 137.75-137.9'

138.0

CLAYSTONE; gray; fresh to slightly weathered; weak to moderately strong; low hardness to moderately hard; w/dolomite layers/seams; (Salina Group - Unit F).

140.0

DOLOMITE; gray; (Salina Group - Unit F)
70°,J,T,No,No,Pl,SR @ 140.1-140.2'
50°,J,T,No,No,Pl,SR @ 140.1-140.3'
fractured @ 140.25-140.4'
90°,J,T,No,No,Pl,SR @ 140.4-140.5' (2)

140.5

CLAYSTONE; gray; fresh to slightly weathered; weak to moderately strong; low hardness to moderately hard; w/dolomite layers/seams; (Salina Group - Unit F).
90°,J,VN,No,No,Pl,SR @ 142.1-142.4'
dolomite; gray @ 142.1-142.4'

Water level @ 21.6' prior to drilling on 08/22/07.

limestone band; dark gray; micritic; band; fresh; strong; hard; 15% vuggy @ 147.0-147.2'

dolomite band; gray @ 147.8-148.0'

dolomite band; gray @ 148.5-148.7'
90°,J,T,No,No,Pl,SR @ 148.5-148.7'

BLACK & VEATCH

BORING LOG

BORING NO. RB-C10

CLIENT	PROJECT	PROJECT NO.
Detroit Edison	Fermi 3 COL Application	147483

PROJECT LOCATION	COORDINATES	GROUND ELEVATION (DATUM)	TOTAL DEPTH
Monroe, MI	N 6050.7' E 4451.3'	581.1 ft (NAVD 88)	271.3 (feet)

SURFACE CONDITIONS	COORDINATE SYSTEM	DATE START	DATE FINISHED
Earth berm	Plant	08/14/07	08/25/07

LOGGED BY	CHECKED BY	APPROVED BY
Bonnie TB	Dogbey/Bonnie TB	Meyer

SAMPLING							CORING									
SAMPLE TYPE	SAMPLE NUMBER	SET 6 INCHES	2ND 6 INCHES	3RD 6 INCHES	N VALUE	SAMPLE RECOVERY	CORE SIZE	RUN NUMBER	RUN LENGTH	RUN RECOVERY	RQD RECOVERY	PERCENT RECOVERY	RQD	DEPTH (FEET)	SAMPLE TYPE	ELEVATION (FEET)	GRAPHIC LOG	CLASSIFICATION OF MATERIALS	REMARKS
							HQ	31	2.5	0.0	0.0	0	0	150		431			
														151		430			
										151.5									
							HQ	32	2.5	1.1	0.0	44	0	152		429		limestone; dark gray @ 152.0-152.3'	
														153		428		limestone; dark gray @ 152.9-153.2'	
										154.0				154		427			
							HQ	33	2.5	1.7	1.4	68	56					dolomite; gray @ 154.4-154.7'	
														155		426		155.1	
														156		425		BRECCIA; dolomite clasts in a poorly indurated to indurated claystone matrix; light brownish gray; fresh; w/clasts of dolomite; gray; micritic; fresh; strong; hard; (Salina Group - Unit F).	
										156.5									
							HQ	34	2.5	1.2	0.35	48	14	157		424			
														158		423		dolomite; gray @ 158.0-158.2'	
										159.0				159		422			Core box #9 @ 159.0'.
							HQ	35	2.5	0.5	0.35	20	14	160		421			
														161		420			
										161.5									
							HQ	36	2.5	1.3	0.0	52	0	162		419		0°,B,T,No,No,Pl,SR @ 162.4', 162.6', 163.3', 163.6' dolomite; gray @ 162.4-162.8' 90°,J,T,No,No,Pl,SR @ 162.6-162.8', 163.3-163.8'	
														163		418		163.3	
																		DOLOMITE; gray; (Salina Group - Unit F)	
										164.0				164		417		163.8	
																		BRECCIA; dolomite clasts in a poorly indurated to indurated claystone matrix; light brownish gray; fresh; w/clasts of dolomite; gray; micritic; fresh; strong; hard; (Salina Group - Unit F).	
														165					

BLACK & VEATCH

BORING LOG

BORING NO. RB-C10

CLIENT	PROJECT	PROJECT NO.
Detroit Edison	Fermi 3 COL Application	147483

PROJECT LOCATION	COORDINATES	GROUND ELEVATION (DATUM)	TOTAL DEPTH
Monroe, MI	N 6050.7' E 4451.3'	581.1 ft (NAVD 88)	271.3 (feet)

SURFACE CONDITIONS	COORDINATE SYSTEM	DATE START	DATE FINISHED
Earth berm	Plant	08/14/07	08/25/07

LOGGED BY	CHECKED BY	APPROVED BY
Bonnie TB	Dogbey/Bonnie TB	Meyer EM

SAMPLING							CORING										
SAMPLE TYPE	SAMPLE NUMBER	SET 6 INCHES	2ND 6 INCHES	3RD 6 INCHES	N VALUE	SAMPLE RECOVERY	CORE SIZE	RUN NUMBER	RUN LENGTH	RUN RECOVERY	RQD RECOVERY	PERCENT RECOVERY	RQD	DEPTH (FEET)	SAMPLE TYPE	ELEVATION (FEET)	GRAPHIC LOG	CLASSIFICATION OF MATERIALS	REMARKS
							HQ	37	2.5	0.1	0.0	4	0	165		416		dolomite band; gray @ 165.0-165.2	
														166		415			
							HQ	38	2.5	166.5 0.15	0.0	6	0	167		414		dolomite band; gray @ 167.7-167.9'	
														168		413			
							HQ	39	2.5	169.0 0.0	0.0	0	0	169		412			
														170		411			
														171		410			
							HQ	40	2.5	171.5 0.0	0.0	0	0	172		409			
														173		408			
														174		407			
							HQ	41	2.5	174.0 0.8	0.0	32	0	175		406		174.7 BRECCIA; limestone clasts in a poorly indurated claystone matrix; gray; fresh; moderately strong; moderately hard; w/clasts of limestone; gray & grayish brown; strong; hard; (Salina Group - Unit F).	
														176		405			
							HQ	42	2.5	176.5 1.9	1.1	76	44	177		404		0°,B,VN,No,No,Pl,SR @ 177.1'	Water level @ 22.3' prior to drilling on 08/23/07.
														178		403		177.7 LIMESTONE; grayish brown; fresh; strong; hard; 5% vuggy; (Salina Group - Unit F). 0°,B,VN,No,No,Pl,SR @ 177.7', 178.2'	
										179.0				179		402		179.0 BRECCIA; limestone clasts in a poorly indurated claystone matrix; gray; fresh; moderately strong; moderately hard; w/clasts of limestone; gray &	
														180					

BLACK & VEATCH

BORING LOG

BORING NO. RB-C10

CLIENT	PROJECT	PROJECT NO.
Detroit Edison	Fermi 3 COL Application	147483

PROJECT LOCATION	COORDINATES	GROUND ELEVATION (DATUM)	TOTAL DEPTH
Monroe, MI	N 6050.7' E 4451.3'	581.1 ft (NAVD 88)	271.3 (feet)

SURFACE CONDITIONS	COORDINATE SYSTEM	DATE START	DATE FINISHED
Earth berm	Plant	08/14/07	08/25/07

LOGGED BY	CHECKED BY	APPROVED BY
Bonnie TB	Dogbey/Bonnie TB	Meyer

SAMPLE TYPE	SAMPLE NUMBER	SET 6 INCHES	2ND 6 INCHES	3RD 6 INCHES	N VALUE	SAMPLE RECOVERY	DEPTH (FEET)	ELEVATION (FEET)	CLASSIFICATION OF MATERIALS	REMARKS
HQ	43	2.5	0.2	0.0	8	0	180	401	grayish brown; strong; hard; (Salina Group - Unit F).	
							181	400		
			181.5							
HQ	44	2.5	0.0	0.0	0	0	182	399		
							183	398		
			184.0				184	397		
HQ	45	2.5	0.0	0.0	0	0	185	396		
							186	395		
			186.5							
HQ	46	2.5	0.2	0.0	8	0	187	394	limestone band; very dark gray; fresh; strong; hard @ 187.4-187.6'	
							188	393		
			189.0				189	392		
HQ	47	2.5	0.6	0.0	24	0	190	391	190.2 LIMESTONE; dark gray; fresh; strong; hard (Salina Group - Unit F)	
							191	390	190.8 BRECCIA; limestone clasts in a poorly indurated claystone matrix; gray; fresh; moderately strong; moderately hard; w/clasts of limestone; gray & grayish brown; strong; hard; (Salina Group - Unit F).	
			191.5							
HQ	48	2.5	1.5	0.0	60	0	192	389	dolomite; light gray/pale yellow; micritic; fresh; strong; hard @ 192.3-192.7' 40°,J,VN,No,No,Pl,SR @ 192.4'	
							193	388	192.7 LIMESTONE; dark gray; micritic; fresh; 10% vuggy (Salina Group - Unit F) 30°,J,VN,No,No,Pl,SR @ 193.1-193.2', 193.3-193.4'	
			194.0				194	387		
							195		90°,J,VN,No,No,WA,R @ 194.7-196.4'	

5/22/2008 9:25 AM DTE - Fermi 3 Geotech

BLACK & VEATCH

BORING LOG

BORING NO. RB-C10

CLIENT	PROJECT	PROJECT NO.
Detroit Edison	Fermi 3 COL Application	147483

PROJECT LOCATION	COORDINATES	GROUND ELEVATION (DATUM)	TOTAL DEPTH
Monroe, MI	N 6050.7' E 4451.3'	581.1 ft (NAVD 88)	271.3 (feet)

SURFACE CONDITIONS	COORDINATE SYSTEM	DATE START	DATE FINISHED
Earth berm	Plant	08/14/07	08/25/07

LOGGED BY	CHECKED BY	APPROVED BY
Bonnie TB	Dogbey/Bonnie TB	Meyer

SAMPLING							CORING									
SAMPLE TYPE	SAMPLE NUMBER	SET 6 INCHES	2ND 6 INCHES	3RD 6 INCHES	N VALUE	SAMPLE RECOVERY	CORE SIZE	RUN NUMBER	RUN LENGTH	RUN RECOVERY	RQD RECOVERY	PERCENT RECOVERY	RQD	DEPTH (FEET)	SAMPLE TYPE	ELEVATION (FEET)	GRAPHIC LOG	CLASSIFICATION OF MATERIALS	REMARKS
							HQ	49	2.5	1.7	0.0	68	0	195		386		fractured @ 194.7-195.5' 80°,J,VN,No,No,PI,SR @ 195.5-195.7'	
														196		385			
										196.5								196.4 BRECCIA; limestone clasts in a poorly indurated claystone matrix; gray; fresh; moderately strong; moderately hard; w/clasts of limestone; gray & grayish brown; strong; hard; (Salina Group - Unit F). large clasts of limestone @ about 197.5'	
							HQ	50	2.5	1.0	0.0	40	0	197		384			
														198		383			
										199.0				199		382			Core box #10 starts @ 199.0'.
														200		381			
														201		380			
							HQ	51	5.0	2.45	1.4	49	28	202		379			
														203		378			
																		203.5 BRECCIA; dolomite clasts in a poorly indurated to indurated limestone matrix; dark gray; micritic; fresh; strong; hard; w/clasts of dolomite; brownish gray; micritic; fresh; strong; hard; (Salina Group - Unit F). clasts flushed out @ 203.8-204.0'	
										204.0				204		377			
														205		376			
														206		375			
							HQ	52	5.0	2.7	0.9	54	18					limestone @ 206.7-207.1'	
														207		374		dolomite band; grayish brown @ 207.4-207.55'	
														208		373		207.7 DOLOMITE; grayish brown; micritic; fresh; strong; hard; w/limestone bands; (Salina Group - Unit F). shale partings - 0°,B,VN,PI,SR @ 208.15', 208.3', 208.5' 90°,J,VN,No,No,PI,SR @ 208.2-209.0' 0°,B,VN,No,No,PI,SR @ 208.7'	
										209.0				209		372			Rough drilling @ 209.0-212.0'.
														210					

BLACK & VEATCH

BORING LOG

BORING NO. RB-C10

CLIENT	PROJECT	PROJECT NO.
Detroit Edison	Fermi 3 COL Application	147483

PROJECT LOCATION	COORDINATES	GROUND ELEVATION (DATUM)	TOTAL DEPTH
Monroe, MI	N 6050.7' E 4451.3'	581.1 ft (NAVD 88)	271.3 (feet)

SURFACE CONDITIONS	COORDINATE SYSTEM	DATE START	DATE FINISHED
Earth berm	Plant	08/14/07	08/25/07

LOGGED BY	CHECKED BY	APPROVED BY
Bonnie TB	Dogbey/Bonnie TB	Meyer

SAMPLING							CORING										
SAMPLE TYPE	SAMPLE NUMBER	SET 6 INCHES	2ND 6 INCHES	3RD 6 INCHES	N VALUE	SAMPLE RECOVERY	CORE SIZE	RUN NUMBER	RUN LENGTH	RUN RECOVERY	RQD RECOVERY	PERCENT RECOVERY	RQD	DEPTH (FEET)	SAMPLE TYPE	ELEVATION (FEET)	GRAPHIC LOG
														210		371	
														211		370	
							HQ	53	5.0	2.9	0.0	58	0	212		369	
														213		368	
														214		367	
							HQ	54	5.0	2.9	0.95	58	19	215		366	
														216		365	
														217		364	
														218		363	
							HQ	55	5.0	1.2	0.0	24	0	219		362	
														220		361	
														221		360	
														222		359	
														223		358	
														224		357	
														225			

214.0

219.0

224.0

CLASSIFICATION OF MATERIALS

limestone band; brownish gray @ 211.0-211.2'
90°,J,VN,No,No,PI,SR @ 211.2-211.75', 212.8-213.0'
grades w/fossils @ 211.2'
0°,B,VN,No,No,PI,SR @ 211.4', 212.1', 212.5', 212.8', 213.1'
65°,J,VN,No,No,PI,SR @ 211.75-211.5'
limestone; brownish gray/gray @ 212.5-212.8'

213.5

LIMESTONE; gray; micritic; fresh; strong; hard; 5% vuggy; (Salina Group - Unit F)

214.5

DOLOMITE; grayish brown; micritic; fresh; strong; hard; w/fossils (Salina Group - Unit F).
fractured @ 214.5-215.0'
90°,V,N,UK,Fi,PI,SR @ 215.1-215.3'
10°,J,VN,UK,Fi,PI,SR @ 215.3'
convoluted bedding; w/brecciation @ 215.5-215.7'
60°,J,VN,No,No,PI,SR @ 215.7-216.1'
grades gray @ 215.7'
0°,B,VN,No,No,PI,SR @ 216.0', 216.1', 216.2', 216.3'

216.5

LIMESTONE; very dark grayish brown; micritic; fresh; strong; hard (Salina Group - Unit F).
fractured @ 216.5-217.5'
60°,J,VN,No,No,PI,SR @ 217.8-218.2'
0°,B,VN,UK,Sp,PI,SR @ 218.1'

218.2

DOLOMITE; light grayish brown; micritic; fresh; strong; hard; w/fossils (Salina Group - Unit F).
grades light brownish gray @ 218.3'
90°,J,VN,No,No,PI,SR @ 218.4-218.6'
shale parting - 0°,B,VN,PI,SR @ 218.4',218.6'
grades dark grayish brown @ 218.6'

220.0

BRECCIA; poorly indurated claystone matrix; w/clasts of dolomite & limestone; (Salina Group - Unit F).

shale partings - 0°,B,VN,PI,SR @ 221.7',222.0', 222.2',222.4'

breccia; limestone matrix; dark gray; micritic; fresh; strong; hard; w/clasts of dolomite; grayish brown; micritic; fresh; strong; hard @ 222.5-222.8'
40°,J,VN,No,No,PI,SR @ 222.8-223.0'

REMARKS

Water level @ 23.3' prior to drilling on 08/24/07.

BLACK & VEATCH

BORING LOG

BORING NO. RB-C10

CLIENT	PROJECT	PROJECT NO.
Detroit Edison	Fermi 3 COL Application	147483

PROJECT LOCATION	COORDINATES	GROUND ELEVATION (DATUM)	TOTAL DEPTH
Monroe, MI	N 6050.7' E 4451.3'	581.1 ft (NAVD 88)	271.3 (feet)

SURFACE CONDITIONS	COORDINATE SYSTEM	DATE START	DATE FINISHED
Earth berm	Plant	08/14/07	08/25/07

LOGGED BY	CHECKED BY	APPROVED BY
Bonnie TB	Dogbey/Bonnie TB	Meyer

SAMPLING							CORING									
SAMPLE TYPE	SAMPLE NUMBER	SET 6 INCHES	2ND 6 INCHES	3RD 6 INCHES	N VALUE	SAMPLE RECOVERY	CORE SIZE	RUN NUMBER	RUN LENGTH	RUN RECOVERY	RQD RECOVERY	PERCENT RECOVERY	RQD	DEPTH (FEET)	SAMPLE TYPE	ELEVATION (FEET)	GRAPHIC LOG	CLASSIFICATION OF MATERIALS	REMARKS
							HQ	56	2.5	0.3	0.0	12	0	225		356		limestone band; dark gray @ 225.0-225.1' dolomite band; gray @ 225.1-225.4' 30°,J,VN,No,No,Pl,SR @ 225.2-225.3', 225.3-225.4'	
														226		355			
										226.5				227		354		dolomite band; gray @ 227.0-227.1' limestone band; dark gray @ 227.1-227.2' dolomite band; gray @ 227.2-227.4'	
							HQ	57	2.5	0.3	0.0	12	0					10°,J,VN,No,No,Pl,SR @ 227.2', 227.4' 90°,J,VN,No,No,Pl,SR @ 227.25-227.35'	
														228		353			
										229.0				229		352			Core box #11 starts @ 229.0'.
							HQ	58	2.5	0.4	0.0	16	0	230		351		dolomite band; gray @ 230.0-230.4'	
														231		350			
										231.5				232		349			
							HQ	59	2.5	0.7	0.0	28	0					232.4 DOLOMITE; gray; (Salina Group - Unit F) fractured @ 232.4-232.8' 0°,B,VN,Cl,Sp,Pl,SR @ 232.8'	
														233		348		233.1 BRECCIA; poorly indurated claystone matrix; w/clasts of dolomite & limestone; (Salina Group - Unit F).	
										234.0				234		347		grades claystone; gray; slightly weathered; very weak; soft; w/clasts of dolomite; gray @ 234.5	
							HQ	60	2.5	1.1	0.0	44	0	235		346		235.0 LIMESTONE; dark gray; (Salina Group - Unit F). fractured @ 235.0-235.8' 0°,B,VN,No,No,Pl,SR @ 235.0', 235.8', 236.0'	
														236		345		235.5 DOLOMITE; grayish brown; micritic; fresh; strong; hard; (Salina Group - Unit F). 70°,J,VN,No,No,Pl,SR @ 235.8-236.0'	
										236.5				237		344		236.0 BRECCIA; poorly indurated claystone matrix; w/clasts of dolomite & limestone; (Salina Group - Unit F). dolomite band; light grayish brown; 5% vuggy @ 237.1-237.2'	
							HQ	61	2.5	1.9	1.0	76	40	238		343		237.2 DOLOMITE; gray; micritic; fresh; strong; hard; (Salina Group - Unit F). 0°,B,VN,No,No,Pl,SR @ 237.3', 237.55', 237.7' shale partings @ 237.7', 237.75'	
										239.0				239		342		237.7 DOLOMITE; light brownish gray; micritic; fresh;	
														240					

BLACK & VEATCH

BORING LOG

BORING NO. RB-C10

CLIENT	PROJECT		PROJECT NO.
Detroit Edison	Fermi 3 COL Application		147483
PROJECT LOCATION	**COORDINATES**	**GROUND ELEVATION (DATUM)**	**TOTAL DEPTH**
Monroe, MI	N 6050.7' E 4451.3'	581.1 ft (NAVD 88)	271.3 (feet)
SURFACE CONDITIONS	**COORDINATE SYSTEM**	**DATE START**	**DATE FINISHED**
Earth berm	Plant	08/14/07	08/25/07
LOGGED BY	**CHECKED BY**	**APPROVED BY**	
Bonnie TB	Dogbey/Bonnie TB	Meyer	

SAMPLING: SAMPLE TYPE	SAMPLE NUMBER	SET 6 INCHES	2ND 6 INCHES	3RD 6 INCHES	N VALUE	SAMPLE RECOVERY
CORING: CORE SIZE	RUN NUMBER	RUN LENGTH	RUN RECOVERY	RQD RECOVERY	PERCENT RECOVERY	RQD
HQ	62	5.0	4.5	2.0	90	40
HQ	63	5.0	4.8	3.7	96	74
HQ	64	5.0	5.0	4.8	100	96

DEPTH (FEET)	SAMPLE TYPE	ELEVATION (FEET)	GRAPHIC LOG	CLASSIFICATION OF MATERIALS	REMARKS
240		341		strong; hard; w/fossils; (Salina Group - Unit E).	
				shale partings - 0°,B,VN,Pl,SR @ 237.8',238.2',238.9'	
				fossils @ 237.75-237.7',238.3-238.4',238.75-238.9'	
241		340		70°,J,VN,No,No,Pl,R @ 239.4-239.7'	
				60°,J,VN,No,No,Pl,SR @ 239.7-240.0'	
				80°,J,T,No,No,Ir,R @ 240.8-241.7'	
242		339		fossils @ 241.3-244.0'	
				55°,J,T,No,No,Pl,SR @ 241.5-241.7'	
				20°,J,T,No,No,Pl,SR @ 241.7-241.8'	
				90°,J,T,No,No,Pl,SR @ 241.8-242.1'	
243		338		10°,J,T,No,No,Pl,SR @ 242.05-242.1'	
				0°,B,T,No,No,Pl,SR @ 242.7', 243.3', 243.4', 243.5'	
244		337		shale partings - 0°,B,VN,Pl,SR @ 244.2',245.4', 246.35'	
				fossils @ 244.4-244.8', 245.0-245.45', 246.2-246.4', 246.6-247.3'	
245		336		10°,J,T,No,No,Pl,SR @ 245.1'	
				90°,J,T,No,No,Pl,SR @ 245.1-245.2'	
246		335		shale partings @ 245.45', 245.55', 245.65'	
				0°,B,T,No,No,Pl,SR @ 245.6', 246.85'	
247		334		80°,J,T,No,No,Pl,SR @ 246.7-246.85'	
248		333		fossils @ 248.0-248.6'	
249		332		fossils @ 248.8-250.2'	Core box #12 starts @ 249.0'.
250		331			
251		330		0°,J,VN,No,No,Pl,SR @ 250.6'	
				0°,J,VN,Cl,Sp,Pl,SR @ 250.85',250.95'	
				251.0	
				DOLOMITE; gray; micritic; fresh; strong; hard; w/ shale partings; (Salina Group - Unit E).	
252		329		0°,J,VN,Cl,Sp,Pl,SR @ 251.3'	
				251.4	
				DOLOMITE; grayish brown; micritic; fresh; strong; hard; w/anhydrite nodules & veins; (Salina Group - Unit E).	
253		328		252.9	
				DOLOMITE; gray; micritic; fresh; strong; hard; 5% vugs; anhydrite filled; (Salina Group - Unit E).	
254		327		shale parting - 10°,V,Pl,S @ 253.15'	
				0°,J,VN,No,No,Pl,SR @ 254.1', 254.2', 254.3'	
				shale band; very dark gray @ 254.3-254.5'	
255				254.5	

244.0 — 249.0 — 254.0

BLACK & VEATCH

BORING LOG

BORING NO. RB-C10
SHEET 18 OF 19

CLIENT	PROJECT	PROJECT NO.
Detroit Edison	Fermi 3 COL Application	147483

PROJECT LOCATION	COORDINATES	GROUND ELEVATION (DATUM)	TOTAL DEPTH
Monroe, MI	N 6050.7' E 4451.3'	581.1 ft (NAVD 88)	271.3 (feet)

SURFACE CONDITIONS	COORDINATE SYSTEM	DATE START	DATE FINISHED
Earth berm	Plant	08/14/07	08/25/07

LOGGED BY	CHECKED BY	APPROVED BY
Bonnie TB	Dogbey/Bonnie TB	Meyer

SAMPLING							CORING									
SAMPLE TYPE	SAMPLE NUMBER	SET 6 INCHES	2ND 6 INCHES	3RD 6 INCHES	N VALUE	SAMPLE RECOVERY	CORE SIZE	RUN NUMBER	RUN LENGTH	RUN RECOVERY	RQD RECOVERY	PERCENT RECOVERY	RQD	DEPTH (FEET)	SAMPLE TYPE	ELEVATION (FEET)	GRAPHIC LOG	CLASSIFICATION OF MATERIALS	REMARKS
							HQ	65	5.0	4.8	4.1	96	82	255		326		DOLOMITE; grayish brown; micritic; fresh; strong; hard; w/shale & gypsum partings; (Salina Group - Unit E). convoluted bedding @ 254.5-255.1' 20°,J,VN,Cl,Fi,Pl,S @ 255.7-256.0'	
														256		325		255.8 DOLOMITE; gray to grayish brown; micritic; fresh; strong; hard; w/gypsum nodules & veins along w/shale partings; (Salina Group - Unit E). 0°,J,VN,No,No,Pl,SR @ 257.4'	
														257		324			
														258		323		257.9 DOLOMITE; grayish brown; micritic; fresh; strong; hard; w/gypsum bands, nodules, & shale partings; (Salina Group - Unit E). 0°,B,VN,Cl,Fi,Pl,SR @ 257.95', 260.05', 260.1'	
			259.0				HQ	66	1.1	1.1	0.65	100	59	259		322		0°,J,VN,No,No,Pl,SR @ 259.2', 259.3'	Core box #13 starts @ 259.0'
														260		321		claystone band @ 259.95-260.5'	
			260.1				HQ	67	3.9	3.9	3.7	100	95	261		320		0°,J,VN,No,No,Pl,S @ 260.7' 261.2 DOLOMITE; gray; micritic; fresh; strong; hard; w/ shale parting; (Salina Group - Unit E). 0°,J,VN,No,No,Pl,S @ 261.3', 262.1'	
														262		319		262.2 DOLOMITE; light brownish gray; micritic; fresh; strong; hard; w/gypsum veins parting & shale parting; (Salina Group - Unit E). 20°,V,W,Gy,Fi,Pl,S @ 262.5-262.6', 262.8-262.9', 263.85-263.95' pale yellow @ 262.6-263.0' 0°,J,VN,No,No,Pl,S @ 262.8', 263.45', 263.8' light gray @ 263.1-263.5' 0°,V,MW to W,Gy,Fi,Pl,S @ 264.0' 0°,J,VN,Gy,Sp,Pl,SR @ 264.2', 264.8', 264.9'	Very Hard drilling @ 262'
														263		318			
			264.0				HQ	68	5.0	5.0	4.7	100	94	264		317			
														265		316			
														266		315		265.3 DOLOMITE; brownish gray; micritic; fresh; strong; hard; w/gypsum veins & nodule, anhydrite veins, & shale partings; (Salina Group - Unit E). 0°,V,MW to W,Gy,Fi,Pl,S @ 265.4', 266.2-266.4', 266.5-266.6', 266.8-266.9' 0°,J,VN,Gy,Sp,Pl,SR @ 265.8', 266.9' 0°,V,MW,anhydrite,Fi,Pl,S @ 266.4', 266.55' convoluted bedding w/gypsum nodules @ 267.1-267.4'	
														267		314			
														268		313		267.4 DOLOMITE; light brownish gray; micritic; fresh; strong; hard; (Salina Group - Unit E). 0°,J,VN,Gy,Sp,Pl,SR @ 267.5'	
														269		312		268.5 DOLOMITE; gray; micritic; fresh; strong; hard; w/ shale partings; (Salina Group - Unit E).	
			269.0											270					

BLACK & VEATCH

BORING LOG

BORING NO. RB-C10
SHEET 19 OF 19

CLIENT	PROJECT	PROJECT NO.
Detroit Edison	Fermi 3 COL Application	147483

PROJECT LOCATION	COORDINATES	GROUND ELEVATION (DATUM)	TOTAL DEPTH
Monroe, MI	N 6050.7' E 4451.3'	581.1 ft (NAVD 88)	271.3 (feet)

SURFACE CONDITIONS	COORDINATE SYSTEM	DATE START	DATE FINISHED
Earth berm	Plant	08/14/07	08/25/07

LOGGED BY	CHECKED BY	APPROVED BY
Bonnie TB	Dogbey/Bonnie TB	Meyer

SAMPLING							CORING									
SAMPLE TYPE	SAMPLE NUMBER	SET 6 INCHES	2ND 6 INCHES	3RD 6 INCHES	N VALUE	SAMPLE RECOVERY	CORE SIZE	RUN NUMBER	RUN LENGTH	RUN RECOVERY	RQD RECOVERY	PERCENT RECOVERY	RQD	DEPTH (FEET)	SAMPLE TYPE	ELEVATION (FEET)	GRAPHIC LOG	CLASSIFICATION OF MATERIALS	REMARKS
							HQ	69	2.3	2.3	2.1	100	91	270		311		shale parting - 0°,B,VN,Sp,Pl,S @ 270.55' shale parting - 0°,B,VN,Sp,WA,S @ 270.7'	
														271		310			Bottom of Boring @ 271.3'. Water level @ 22.7' @ completion of drilling. Boring caved @ 139.2'. Boring backfilled from 271.3' w/ bentonite chips to 50' below ground surface on 09/11/07. Continued w/ bentonite chips to 10' below ground surface on 09/20/07. Continued w/ bentonite chips to 3' below ground surface, then gravel to surface on 09/21/07.
														272		309			
														273		308			
														274		307			
														275		306			
														276		305			
														277		304			
														278		303			
														279		302			
														280		301			
														281		300			
														282		299			
														283		298			
														284		297			
														285					

5/22/2008 9:25 AM DTE - Fermi 3 Geotech

BLACK & VEATCH

BORING LOG

BORING NO. RB-C10

CLIENT	PROJECT	PROJECT NO.
Detroit Edison	Fermi 3 COL Application	147483

PROJECT LOCATION	COORDINATES	GROUND ELEVATION (DATUM)	TOTAL DEPTH
Monroe, MI	N 6050.7' E 4451.3'	581.1 ft (NAVD 88)	271.3 (feet)

SURFACE CONDITIONS	COORDINATE SYSTEM	DATE START	DATE FINISHED
Earth berm	Plant	08/14/07	08/25/07

LOGGED BY	CHECKED BY	APPROVED BY
Bonnie TB	Dogbey/Bonnie TB	Meyer EM

SAMPLING							CORING									
SAMPLE TYPE	SAMPLE NUMBER	SET 6 INCHES	2ND 6 INCHES	3RD 6 INCHES	N VALUE	SAMPLE RECOVERY	CORE SIZE	RUN NUMBER	RUN LENGTH	RUN RECOVERY	RQD RECOVERY	PERCENT RECOVERY	RQD	DEPTH (FEET)	SAMPLE TYPE	ELEVATION (FEET)	GRAPHIC LOG	CLASSIFICATION OF MATERIALS	REMARKS
SPT	1	50/5	-	-	50+	0.3								0		581		SILT (MH) - About 100% low plasticity, low toughness, no dilatancy, low dry strength fines; dark grayish brown; very soft; dry; (Fill).	Boring advanced w/4¼" ID; 8" OD hollow stem augers. SPT performed w/ BK81 automatic hammer.
														0.3				Well graded GRAVEL (GW) - About 90% fine to coarse, subangular to angular, hard gravel w/max. size 2"; about 5% sand; about 5% fines; (Fill).	
														1		580			
														2		579			
														3		578			
														4		577			
														5		576			
SPT	2	3	4	3	7	0.4								6		575			
														7		574			
														8		573			
														9		572			
														10		571			
SPT	3	1	7	8	15	0.4								11		570			
														12		569			
														13		568			
														13.8				Fat CLAY (CH) - About 90% high plasticity, high toughness, no dilatancy fines; trace fine to coarse sand; trace angular gravel w/max. size ½"; gray; hard; moist; firm; homogeneous; slight reaction w/HCl	Change in drill reaction @ 13.8'.
														14		567			
														15					

BLACK & VEATCH

BORING LOG

BORING NO. RB-C10

CLIENT	PROJECT	PROJECT NO.
Detroit Edison	Fermi 3 COL Application	147483

PROJECT LOCATION	COORDINATES	GROUND ELEVATION (DATUM)	TOTAL DEPTH
Monroe, MI	N 6050.7' E 4451.3'	581.1 ft (NAVD 88)	271.3 (feet)

SURFACE CONDITIONS	COORDINATE SYSTEM	DATE START	DATE FINISHED
Earth berm	Plant	08/14/07	08/25/07

LOGGED BY	CHECKED BY	APPROVED BY
Bonnie TB	Dogbey/Bonnie TB	Meyer EM

SAMPLING

SAMPLE TYPE	SAMPLE NUMBER	SET 6 INCHES	2ND 6 INCHES	3RD 6 INCHES	N VALUE	SAMPLE RECOVERY
SPT	4	4	6	9	15	1.2
TW	5					2.0
SPT	6	2	2	6	8	1.5
TW	7					1.1
SPT	8	44	40	30	70	1.5

CORING

CORE SIZE	RUN NUMBER	RUN LENGTH	RUN RECOVERY	RQD RECOVERY	PERCENT RECOVERY	RQD
HQ	1	1.6	27.4 1.6	1.6	100	100
			29.0			

DEPTH (FEET): 15, 16, 17, 18, 19, 20, 21, 22, 23, 24, 25, 26, 27, 28, 29, 30

ELEVATION (FEET): 566, 565, 564, 563, 562, 561, 560, 559, 558, 557, 556, 555, 554, 553, 552

CLASSIFICATION OF MATERIALS	REMARKS
	PP = 1.5 STF @ 16.0'.
	PP = 1.8 TSF @ 19.5'.
21.0 Lean CLAY (CL) - About 95% medium plasticity, medium toughness, no dilatancy fines; 5% subangular to angular sand; brown; firm; moist; strong reaction w/HCl; homogeneous; (Glacial Till). grades trace cobbles @ 22.5'	Driller reported possible cobble @ 22.5'.
25.0 Lean CLAY with Sand (CL) - About 75% medium plasticity, medium toughness, no dilatancy fines; about 15% fine to coarse, angular to subangular sand; about 10% fine, subangular gravel, fractured w/1 hammer blow; gray to grayish brown; moist; strong reaction w/HCl; homogeneous.	TV = 1.3 TSF @ 25.0'. PP = 4.0 TSF @ 25.0'.
27.4 DOLOMITE; grayish brown & dark gray, mottled; micritic; fresh; strong; hard; (Bass Islands Group). 90°,J,T,No,No,Pl,SR @ 27.8-27.95' 0°,J,Cl,Sp,VN,Ir,R @ 27.95', 28.65'	Auger refusal @ 27.4'. Set nominal 6" temporary steel casing to 28.0'. Below 27.4' continued w/ triple tube wire line core barrel
28.6 DOLOMITE; dark gray; micritic; fresh; strong; hard; w/stylolites; slightly mottled; (Bass Islands Group). 0°,B,VN,UK,Sp,Pl,SR @ 29.5', 29.6', 29.7', 30.15'	

BLACK & VEATCH

BORING LOG

BORING NO. RB-C10
SHEET 3 OF 19

CLIENT	PROJECT	PROJECT NO.
Detroit Edison	Fermi 3 COL Application	147483

PROJECT LOCATION	COORDINATES	GROUND ELEVATION (DATUM)	TOTAL DEPTH
Monroe, MI	N 6050.7' E 4451.3'	581.1 ft (NAVD 88)	271.3 (feet)

SURFACE CONDITIONS	COORDINATE SYSTEM	DATE START	DATE FINISHED
Earth berm	Plant	08/14/07	08/25/07

LOGGED BY	CHECKED BY	APPROVED BY
Bonnie TB	Dogbey/Bonnie TB	Meyer

SAMPLING							CORING									
SAMPLE TYPE	SAMPLE NUMBER	SET 6 INCHES	2ND 6 INCHES	3RD 6 INCHES	N VALUE	SAMPLE RECOVERY	CORE SIZE	RUN NUMBER	RUN LENGTH	RUN RECOVERY	RQD RECOVERY	PERCENT RECOVERY	RQD	DEPTH (FEET)	SAMPLE TYPE	ELEVATION (FEET)	GRAPHIC LOG	CLASSIFICATION OF MATERIALS	REMARKS
														30		551		w/diamond bit using water as drilling fluid. Core box #1 starts @ 27.4'.	
							HQ	2	5.0	5.0	2.9	100	58	31		550		90°,J,T,No,No,Pl,SR @ 31.25-31.55', 31.5-31.55', 32.5-34.0'	
														32		549		0°,B,VN,UK,Sp,Pl,SR @ 31.3', 31.55', 31.6'	
														33		548		0°,B,VN,UK,Sp,Pl,SR @ 32.5', 32.8', 33.0', 33.2', 33.3'	
																		33.5	
										34.0				34		547		DOLOMITE; dark grayish brown & grayish brown; micritic; fresh; strong; hard; (Bass Islands Group).	
														35		546		0°,B,VN,No,No,Pl,SR @ 34.8', 35.2'	
														36		545		0°,B,VN,UK,Sp,Pl,SR @ 35.7', 36.2'	
							HQ	3	5.0	5.0	3.75	100	75	37		544		convoluted bedding @ 36.7-37.3'	
														38		543		0°,J,T,No,No,Ir,R @ 37.5' 90°,J,T,No,No,Pl,SR @ 37.5-37.9' grades light gray @ 37.8' 0°,B,VN,UK,Sp,Pl,SR @ 37.9' 70°,J,T,No,No,Pl,SR @ 38.1-34.4' 0°,B,VN,No,No,Pl,SR @ 38.3', 38.5'	
																		38.5	
										39.0				39		542		DOLOMITE; light gray & very dark gray, mottled; micritic; fresh; strong; hard; (Bass Islands Group). 80°,J,T,No,No,Pl,SR @ 39.3-39.9'	Water level @ 8.3' prior to drilling on 08/16/07. Core box #2 starts @ 39.0'.
														40		541			
														41		540		0°,B,VN,No,No,Pl,SR @ 40.7', 41.1'	
																		41.1	
							HQ	4	5.0	4.6	3.5	92	70	42		539		DOLOMITE; dark grayish brown; micritic; fresh; strong; hard; w/pitted zones, stylolites & shale partings; (Bass Islands Group). pitted @ 41.3-41.7' 70°,J,T,No,No,Pl,SR @ 41.6-41.9' pitted @ 42.15-42.25' pitted @ 42.35-42.4'	
														43		538		shale parting - 0°,B,VN,Pl,SR @ 42.5' pitted @ 42.6-42.65' pitted @ 42.7-42.75' pitted @ 42.85-43.05'	
										44.0				44		537		0°,B,VN,No,No,Pl,SR @ 43.3' shale parting @ 43.5' 0°,B,VN,No,No,Pl,SR @ 44.2' 70°,J,T,No,No,Pl,SR @ 44.7-45.6'	
														45					

BLACK & VEATCH

BORING LOG

BORING NO. RB-C10

CLIENT	PROJECT	PROJECT NO.
Detroit Edison	Fermi 3 COL Application	147483

PROJECT LOCATION	COORDINATES	GROUND ELEVATION (DATUM)	TOTAL DEPTH
Monroe, MI	N 6050.7' E 4451.3'	581.1 ft (NAVD 88)	271.3 (feet)

SURFACE CONDITIONS	COORDINATE SYSTEM	DATE START	DATE FINISHED
Earth berm	Plant	08/14/07	08/25/07

LOGGED BY	CHECKED BY	APPROVED BY
Bonnie TB	EM SF Dogbey/Bonnie TB	EM Meyer

SAMPLING							CORING									
SAMPLE TYPE	SAMPLE NUMBER	SET 6 INCHES	2ND 6 INCHES	3RD 6 INCHES	N VALUE	SAMPLE RECOVERY	CORE SIZE	RUN NUMBER	RUN LENGTH	RUN RECOVERY	RQD RECOVERY	PERCENT RECOVERY	RQD	DEPTH (FEET)	SAMPLE TYPE	ELEVATION (FEET)	GRAPHIC LOG	CLASSIFICATION OF MATERIALS	REMARKS
														45		536		0°,B,VN,No,No,Pl,SR @ 45.0', 45.2'	
														46		535		70°,J,T,No,No,Pl,SR @ 45.9-46.9'	
							HQ	5	5.0	4.6	0.3	92	6					0°,B,VN,No,No,Pl,SR @ 46.2', 46.6', 46.7', 46.85'	
														47		534		0°,B,VN,No,No,Pl,SR @ 47.0', 47.1', 47.4', 47.7'	
														48		533		50°,J,T,No,No,Pl,SR @ 47.7-48.0' fractured @ 48.0-48.3'	
																		0°,B,VN,No,No,Pl,SR @ 48.5'	
										49.0				49		532		anhydrite @ 49.2' shale parting @ 49.5'	
														50		531		shale partings - 0°,B,T,SR @ 49.6',49.8',49.9',50.3' 90°,J,T,No,No,Pl,SR @ 50.0-50.4', 51.0-52.0'	
														51		530			
							HQ	6	5.0	5.0	1.0	100	20						
														52		529		shale partings - 0°,B,T,SR @ 51.9' 70°,J,T,No,No,Pl,R @ 52.0-53.1', 52.1-52.3' shale partings - 0°,B,T,SR @ 52.1',52.8',53.5',53.8'	
														53		528		50°,J,T,No,No,Pl,SR @ 52.5-53.0'	
																		70°,J,T,No,No,Pl,R @ 53.3-53.5'	
														54		527		53.5 DOLOMITE; oolitic; grayish brown; very fine grained; fresh; strong; hard; (Bass Islands Group). 60°,J,T,No,No,Pl,SR @ 53.8-54.0'	Core box #3 starts @ 54.0'.
										54.0				55		526			
																		30°,J,T,No,No,Pl,SR @ 55.3-55.5', 55.5-55.65', 55.7-55.85'	
														56		525			
							HQ	7	5.0	5.0	2.7	100	54					56.5 DOLOMITE; grayish brown; micritic; fresh; strong; hard; (Bass Islands Group). 0°,B,VN,No,No,Pl,SR @ 56.5', 58.5', 58.9' 30°,J,T,No,No,Pl,SR @ 56.6-56.7', 57.2-57.3' fractured @ 56.8-57.1' very fine grained @ 57.3-57.4' 10°,J,T,No,No,Pl,SR @ 57.5', 57.7' mottled dolomite @ 57.7-58.0' shale parting @ 58.0-58.05' 90°,J,T,No,No,Pl,SR @ 58.05-58.2' banded @ 58.4-58.5' grades light grayish brown @ 59.3' convoluted bedding @ 59.3-60.5'	
														57		524			
														58		523			
														59		522			
										59.0				60					

BLACK & VEATCH

BORING LOG

BORING NO. RB-C10

SHEET 5 OF 19

CLIENT	PROJECT	PROJECT NO.
Detroit Edison	Fermi 3 COL Application	147483

PROJECT LOCATION	COORDINATES	GROUND ELEVATION (DATUM)	TOTAL DEPTH
Monroe, MI	N 6050.7' E 4451.3'	581.1 ft (NAVD 88)	271.3 (feet)

SURFACE CONDITIONS	COORDINATE SYSTEM	DATE START	DATE FINISHED
Earth berm	Plant	08/14/07	08/25/07

LOGGED BY	CHECKED BY	APPROVED BY
Bonnie TB	Dogbey/Bonnie TB	Meyer

SAMPLING							CORING										
SAMPLE TYPE	SAMPLE NUMBER	SET 6 INCHES	2ND 6 INCHES	3RD 6 INCHES	N VALUE	SAMPLE RECOVERY	CORE SIZE	RUN NUMBER	RUN LENGTH	RUN RECOVERY	RQD RECOVERY	PERCENT RECOVERY	RQD	DEPTH (FEET)	SAMPLE TYPE	ELEVATION (FEET)	GRAPHIC LOG	CLASSIFICATION OF MATERIALS	REMARKS
														60		521		0°,B,VN,UK,Sp,Pl,SR @ 59.4', 59.6', 59.8', 60.1' brecciated, healed @ 60.3-60.4'	
																		60.5 DOLOMITE; argillaceous; grayish brown; micritic; fresh; strong; hard; banded; (Bass Islands Group).	
							HQ	8	5.0	4.8	3.4	96	68	61		520		0°,B,VN,UK,Sp,Pl,SR @ 60.6', 61.8', 63.8'	
														62		519		10°,J,VN,UK,Sp,Pl,SR @ 62.4', 62.5', 62.65', 62.75'	
														63		518		62.9 DOLOMITE; grayish brown; micritic; fresh; strong; hard; w/stylolites; (Bass Islands Group).	
																		10°,J,VN,UK,Sp,Pl,SR @ 63.2'	
										64.0				64		517		0°,B,VN,UK,Sp,Pl,SR @ 64.2', 64.5', 64.8', 65.0', 65.25', 65.35', 65.55', 65.8' fractured @ 64.5-64.9'	
														65		516		90°,J,T,No,No,Pl,SR @ 65.0-66.0', 65.25-65.3', 65.35-65.4' highly fractured @ 65.6-65.7'	
							HQ	9	5.0	5.0	3.0	100	60	66		515		60°,J,T,No,No,Pl,SR @ 66.0-66.3'	
														67		514			
														68		513		0°,B,VN,UK,Sp,Pl,SR @ 67.65', 67.8', 67.9'	Core box #4 starts @ 67.9'.
										69.0				69		512			
														70		511		60°,J,T,No,No,Pl,SR @ 69.8-70.2'	
																		70.8 DOLOMITE; grayish brown; micritic; fresh; strong; hard; banded; w/stylolites; (Bass Islands Group).	
							HQ	10	5.0	4.8	3.8	96	76	71		510		20°,J,T,No,No,Pl,SR @ 71.2-71.3', 71.7-71.9', 72.0-72.2'	
														72		509		90°,J,T,No,No,WA,SR @ 71.7-72.0'	
														73		508		20°,J,T,No,No,Pl,SR @ 73.1-73.3' 0°,B,T,No,No,Pl,SR @ 73.1'	
										74.0				74		507			
														75					

BLACK & VEATCH

BORING LOG

BORING NO. RB-C10

CLIENT	PROJECT	PROJECT NO.
Detroit Edison	Fermi 3 COL Application	147483

PROJECT LOCATION	COORDINATES	GROUND ELEVATION (DATUM)	TOTAL DEPTH
Monroe, MI	N 6050.7' E 4451.3'	581.1 ft (NAVD 88)	271.3 (feet)

SURFACE CONDITIONS	COORDINATE SYSTEM	DATE START	DATE FINISHED
Earth berm	Plant	08/14/07	08/25/07

LOGGED BY	CHECKED BY	APPROVED BY
Bonnie TB	Dogbey/Bonnie TB	Meyer

SAMPLING							CORING									
SAMPLE TYPE	SAMPLE NUMBER	SET 6 INCHES	2ND 6 INCHES	3RD 6 INCHES	N VALUE	SAMPLE RECOVERY	CORE SIZE	RUN NUMBER	RUN LENGTH	RUN RECOVERY	RQD RECOVERY	PERCENT RECOVERY	RQD	DEPTH (FEET)	SAMPLE TYPE	ELEVATION (FEET)	GRAPHIC LOG	CLASSIFICATION OF MATERIALS	REMARKS
														75		506			
														76		505		60°,J,T,Ca,Fi,Pl,SR @ 75.7-75.9'	
																		0°,B,T,No,No,Pl,SR @ 76.3', 77.5'	
							HQ	11	5.0	5.0	3.7	100	74	77		504		10°,J,VN,Cl,Fi,WA,SR @ 76.8' slightly brecciated, healed @ 77.0-77.3'	
																		10°,J,VN,No,No,Pl,SR @ 77.6'	
														78		503		77.7 DOLOMITE; grayish brown; micritic; fresh; strong; hard; banded; (Bass Islands Group). 20°,J,T,No,No,Pl,SR @ 76.7-76.9' 90°,J,T,No,No,Pl,SR @ 77.8-78.5', 76.9-77.1' 0°,B,T,No,No,Pl,SR @ 78.85' 70°,J,T,No,No,Pl,SR @ 79.3-79.8'	
										79.0				79		502			Water level @ 16.1' prior to drilling on 08/21/07.
														80		501		shale parting - 10°,B,N,Pl,SR @ 80.1'	
																		80.2 SHALE; black; fresh; weak; low hardness; (Bass Islands Group). interbedded w/dolomite @ 80.55-80.65'	
							HQ	12	5.0	5.0	3.4	100	68	81		500		80.7 DOLOMITE; grayish brown; micritic; fresh; strong; hard; banded; (Bass Islands Group). 0°,J,VN,Cl,Sp,Pl,SR @ 81.95' 90°J,T,No,No,WA,R @ 81.95-82.9'	Core box #5 starts @ 81.3'.
														82		499			
														83		498			
										84.0				84		497			
																		84.6 DOLOMITE; grayish brown; micritic; fresh; strong; hard; w/brecciated zones & stylolites; (Bass Islands Group). brecciated, healed @ 85.2-85.5'	
														85		496			
														86		495		70°,J,T,No,No,Ir,SR @ 85.9-86.3', 88.1-88.4'	
							HQ	13	5.0	5.0	3.3	100	66					0°,J,VN,Ca,Sp,Pl,S @ 86.5'	
														87		494		brecciated, healed @ 86.5-86.9', 87.2-87.5' 45°,J,T,No,No,Pl,SR @ 86.9-87.0', 87.4-87.5'	
																		10°,J,T,Cl,Sp,Pl,SR @ 87.5'	
														88		493		0°,J,T,No,No,Pl,SR @ 88.1'	
										89.0				89		492			
																		40°,J,T,No,No,Pl,SR @ 89.0-89.2' 60°,J,T,No,No,Pl,SR @ 89.2-89.4'	
														90				90°,J,T,No,No,Pl,SR @ 89.7-89.8'	

BLACK & VEATCH **BORING LOG**

BORING NO. RB-C10
SHEET 7 OF 19

CLIENT	PROJECT	PROJECT NO.
Detroit Edison	Fermi 3 COL Application	147483

PROJECT LOCATION	COORDINATES	GROUND ELEVATION (DATUM)	TOTAL DEPTH
Monroe, MI	N 6050.7' E 4451.3'	581.1 ft (NAVD 88)	271.3 (feet)

SURFACE CONDITIONS	COORDINATE SYSTEM	DATE START	DATE FINISHED
Earth berm	Plant	08/14/07	08/25/07

LOGGED BY	CHECKED BY	APPROVED BY
Bonnie TB	Dogbey/Bonnie TB	Meyer

SAMPLING							CORING										CLASSIFICATION OF MATERIALS	REMARKS
SAMPLE TYPE	SAMPLE NUMBER	SET 6 INCHES	2ND 6 INCHES	3RD 6 INCHES	N VALUE	SAMPLE RECOVERY	CORE SIZE	RUN NUMBER	RUN LENGTH	RUN RECOVERY	RQD RECOVERY	PERCENT RECOVERY	RQD	DEPTH (FEET)	SAMPLE TYPE	ELEVATION (FEET)	GRAPHIC LOG	
														90		491		0°,J,VN,No,No,Ir,R @ 89.7' 10°,J,VN,Cl,Sp,WA,SR @ 89.9' 70°,J,VN,No,No,Pl,SR @ 90.1-90.2' 0°,J,VN,No,No,Pl,SR @ 90.5' brecciated, healed @ 91.0-91.3'
							HQ	14	5.0	5.0	3.5	100	70	91		490		91.3 DOLOMITE; grayish brown; micritic; fresh; strong; hard; banded; w/stylolites; (Bass Islands Group). cross-bedding @ 40° @ 91.65-91.9' 0°,J,T,Cl,Sp,Pl,SR @ 92.0', 92.3', 93.0', 93.3' 90°,J,T,No,No,Pl,SR @ 92.05-92.3'
														92		489		
														93		488		
										94.0				94		487		0°,B,VN,No,No,Pl,SR @ 94.2', 94.5', 94.9' — Core box #6 starts @ 94.0'.
							HQ	15	5.0	4.9	2.7	98	54	95		486		dolomite; argillaceous; dark gray; micritic; fresh; strong; hard @ 94.9-95.3' 10°,J,VN,No,No,Pl,SR @ 95.0' fractured @ 95.2-95.3', 96.4-96.5' grades dark grayish brown @ 95.3' 70°,J,T,No,No,Ir,S @ 95.4-95.5' brecciated, healed @ 95.7-95.8' 0°,B,VN,No,No,Pl,SR @ 96.0', 96.3', 96.4'
														96		485		
														97		484		grades grayish brown @ 97.1' 10°,J,VN,No,No,Pl,SR @ 97.4'
														98		483		
														99		482		10°,J,VN,No,No,Pl,SR @ 98.5',98.9'
										99.0								fractured @ 99.1-99.3'
														100		481		70°,J,T,No,No,Pl,SR @ 99.5-99.7' shale partings - 0°,B,T,Pl,SR @ 99.7',100.6'
							HQ	16	5.0	4.8	3.1	96	62	101		480		0°,B,T,No,No,Pl,SR @ 100.5' 70°,J,T,No,No,Pl,SR @ 100.6-100.8' 90°,J,VN,Cl,Sp,Pl,SR @ 100.6-101.4' shale partings - 0°,B,T,Pl,SR @ 101.2', 101.4'
														102		479		90°,J,T,No,No,Pl,SR @ 101.75-101.85' 0°,B,T,No,No,Pl,SR @ 101.85'
														103		478		
										104.0				104		477		shale parting - 0°,B,T,Pl,SR @ 103.7'
														105				80°,J,VN,No,No,Pl,SR @ 104.3-104.7' 10°,J,VN,No,No,Pl,SR @ 104.5', 104.7', 104.8', 104.9'

BLACK & VEATCH

BORING LOG

BORING NO. RB-C10

CLIENT	PROJECT	PROJECT NO.
Detroit Edison	Fermi 3 COL Application	147483

PROJECT LOCATION	COORDINATES	GROUND ELEVATION (DATUM)	TOTAL DEPTH
Monroe, MI	N 6050.7' E 4451.3'	581.1 ft (NAVD 88)	271.3 (feet)

SURFACE CONDITIONS	COORDINATE SYSTEM	DATE START	DATE FINISHED
Earth berm	Plant	08/14/07	08/25/07

LOGGED BY	CHECKED BY	APPROVED BY
Bonnie TB	Dogbey/Bonnie TB	Meyer Em

SAMPLE TYPE	SAMPLE NUMBER	SET 6 INCHES	2ND 6 INCHES	3RD 6 INCHES	N VALUE	SAMPLE RECOVERY	DEPTH (FEET)	ELEVATION (FEET)	CLASSIFICATION OF MATERIALS	REMARKS
HQ	17	5.0	4.3	3.3	86	66	105	476	10°,J,VN,No,No,Pl,SR @ 105.7', 107.1'	
							106	475	105.8 DOLOMITE; grayish brown; micritic; fresh; strong; hard; w/stylolites; (Bass Islands Group). 0°,J,N,Ca,Fi,Pl,SR @ 105.8' 20°,J,VN,Cl,Sp,Pl,SR @ 105.9' 30°,J,VN,No,No,Pl,SR @ 107.0'	
							107	474		
							108	473	50°,J,VN,No,No,Pl,SR @ 107.9-108.1'	
			109.0				109	472		Core box #7 starts @ 109.0'.
HQ	18	5.0	4.1	1.7	82	34	110	471		
							111	470	50°,J,VN,No,No,Pl,SR @ 110.7-110.9', 111.2-111.4' fractured @ 110.8-111.3'	
							112	469	90°,J,T,anhydrite,Pa,Pl,SR @ 111.6-113.1' 0°,J,VN,No,No,Pl,SR @ 111.6' 30°,J,VN,No,No,Pl,SR @ 111.7-112.0' 0°,J,VN,Ca,Sp,Pl,SR @ 112.1', 112.3', 112.6' fractured @ 112.3-112.7'	
							113	468	0°,J,VN,No,No,Pl,SR @ 112.9', 113.0', 113.1'	
			114.0				114	467		
HQ	19	5.0	2.9	0.4	58	8	115	466	114.5 DOLOMITE; argillaceous; dark gray & grayish brown, banded; micritic; fresh; strong; hard; w/shale partings; (Salina Group - Unit F). shale parting @ 115.2'	
							116	465	shale parting @ 116.0'	
							117	464	shale partings - 0°,B,VN,Pl,SR @ 116.7',117.05', 117.3',117.4',117.7',117.9' 90°,J,T,Ca,Pa,Pl,SR @ 116.7-119.0'	
							118	463	50°,J,T,No,No,Pl,SR @ 118.1-118.3' shale partings - 0°,B,VN,Pl,SR @ 118.3',118.7'	
			119.0				119	462		
							120			

5/22/2008 9:25 AM DTE - Fermi 3 Geotech

BLACK & VEATCH **BORING LOG**

BORING NO. RB-C10
SHEET 9 OF 19

CLIENT	PROJECT	PROJECT NO.
Detroit Edison	Fermi 3 COL Application	147483

PROJECT LOCATION	COORDINATES	GROUND ELEVATION (DATUM)	TOTAL DEPTH
Monroe, MI	N 6050.7' E 4451.3'	581.1 ft (NAVD 88)	271.3 (feet)

SURFACE CONDITIONS	COORDINATE SYSTEM	DATE START	DATE FINISHED
Earth berm	Plant	08/14/07	08/25/07

LOGGED BY	CHECKED BY	APPROVED BY
Bonnie TB	Dogbey/Bonnie TB	Meyer

SAMPLING: SAMPLE TYPE	SAMPLE NUMBER	SET 6 INCHES	2ND 6 INCHES	3RD 6 INCHES	N VALUE	SAMPLE RECOVERY	CORING: CORE SIZE	RUN NUMBER	RUN LENGTH	RUN RECOVERY	RQD RECOVERY	PERCENT RECOVERY	RQD	DEPTH (FEET)	SAMPLE TYPE	ELEVATION (FEET)	GRAPHIC LOG	CLASSIFICATION OF MATERIALS	REMARKS
HQ	20	5.0	1.0	0.0	20	0								120		461		anhydrite @ 122.2-122.5'	
														121		460			
														122		459			
														123		458		123.0 DOLOMITE; argillaceous; micritic; pale brown; fresh; strong; hard; (Salina Group - Unit F).	
HQ	21	2.5	124.0 1.5	0.4	60	16								124		457			
														125		456		125.5 CLAYSTONE; dark gray to grayish brown; fresh to slightly weathered; weak to moderately strong; low hardness to moderately hard; w/dolomite layers/ seams; (Salina Group - Unit F). dolomite @ 125.5-125.8'	
														126		455			
HQ	22	2.5	126.5 1.6	0.4	64	16								127		454			
														128		453		0°,J,VN,No,No,Pl,SR @ 127.9' dolomite; gray; micritic; fresh; strong; hard @ 128.2-128.6' 10°,J,VN,No,No,WA,SR @ 128.2' 0°,J,VN,No,No,Pl,SR @ 128.6'	
HQ	23	2.5	129.0 2.0	0.0	80	0								129		452			Core box #8 starts @ 129.0'
														130		451		129.9 DOLOMITE; gray; (Salina Group - Unit F) 0°,J,VN,No,No,Pl,SR @ 130.0', 130.4', 130.5' 50°,J,VN,No,No,Pl,SR @ 130.15-130.4'	
														131		450		130.5 CLAYSTONE; gray; fresh to slightly weathered; weak to moderately strong; low hardness to moderately hard; w/dolomite layers/seams; (Salina Group - Unit F).	
HQ	24	2.5	131.5 1.4	0.0	56	0								132		449			
														133		448		dolomite; gray @ 132.4-132.8' 90°,J,T,No,No,Pl,SR @ 132.4-132.7' 0°,J,T,No,No,Pl,SR @ 132.65', 132.7', 132.45' calcite filled vug in dolomite @ 132.75'	
			134.0											134		447			
														135					

5/22/2008 9:25 AM DTE - Fermi 3 Geotech

BLACK & VEATCH

BORING LOG

BORING NO. RB-C10

CLIENT	PROJECT	PROJECT NO.
Detroit Edison	Fermi 3 COL Application	147483

PROJECT LOCATION	COORDINATES	GROUND ELEVATION (DATUM)	TOTAL DEPTH
Monroe, MI	N 6050.7' E 4451.3'	581.1 ft (NAVD 88)	271.3 (feet)

SURFACE CONDITIONS	COORDINATE SYSTEM	DATE START	DATE FINISHED
Earth berm	Plant	08/14/07	08/25/07

LOGGED BY	CHECKED BY	APPROVED BY
Bonnie TB	Dogbey/Bonnie TB	Meyer EM

SAMPLING							CORING									
SAMPLE TYPE	SAMPLE NUMBER	SET 6 INCHES	2ND 6 INCHES	3RD 6 INCHES	N VALUE	SAMPLE RECOVERY	CORE SIZE	RUN NUMBER	RUN LENGTH	RUN RECOVERY	RQD RECOVERY	PERCENT RECOVERY	RQD	DEPTH (FEET)	SAMPLE TYPE	ELEVATION (FEET)	GRAPHIC LOG	CLASSIFICATION OF MATERIALS	REMARKS
HQ	25	2.5	0.7	0.0	28	0								135		446			
														136		445			
			136.5											137		444			
HQ	26	2.5	0.5	0.0	20	0								138		443			
			139.0											139		442			
HQ	27	2.5	0.5	0.0	20	0								140		441			
			141.5											141		440			
HQ	28	2.5	1.2	0.5	48	20								142		439			
														143		438			
			144.0											144		437			
HQ	29	2.5	0.4	0.0	16	0								145		436			
														146		435			
			146.5											147		434			
HQ	30	2.5	0.8	0.0	32	0								148		433			
			149.0											149		432			
														150					

137.5

DOLOMITE; gray; (Salina Group - Unit F)
90°,J,T,No,No,Pl,SR @ 137.5-137.9'
0°,J,T,No,No,Pl,SR @ 137.7'
40°,J,T,No,No,Pl,SR @ 137.75-137.9'

138.0

CLAYSTONE; gray; fresh to slightly weathered; weak to moderately strong; low hardness to moderately hard; w/dolomite layers/seams; (Salina Group - Unit F).

140.0

DOLOMITE; gray; (Salina Group - Unit F)
70°,J,T,No,No,Pl,SR @ 140.1-140.2'
50°,J,T,No,No,Pl,SR @ 140.1-140.3'
fractured @ 140.25-140.4'
90°,J,T,No,No,Pl,SR @ 140.4-140.5' (2)

140.5

CLAYSTONE; gray; fresh to slightly weathered; weak to moderately strong; low hardness to moderately hard; w/dolomite layers/seams; (Salina Group - Unit F).
90°,J,VN,No,No,Pl,SR @ 142.1-142.4'
dolomite; gray @ 142.1-142.4'

Water level @ 21.6' prior to drilling on 08/22/07.

limestone band; dark gray; micritic; band; fresh; strong; hard; 15% vuggy @ 147.0-147.2'

dolomite band; gray @ 147.8-148.0'

dolomite band; gray @ 148.5-148.7'
90°,J,T,No,No,Pl,SR @ 148.5-148.7'

BLACK & VEATCH

BORING LOG

BORING NO. RB-C10

CLIENT	PROJECT	PROJECT NO.
Detroit Edison	Fermi 3 COL Application	147483

PROJECT LOCATION	COORDINATES	GROUND ELEVATION (DATUM)	TOTAL DEPTH
Monroe, MI	N 6050.7' E 4451.3'	581.1 ft (NAVD 88)	271.3 (feet)

SURFACE CONDITIONS	COORDINATE SYSTEM	DATE START	DATE FINISHED
Earth berm	Plant	08/14/07	08/25/07

LOGGED BY	CHECKED BY	APPROVED BY
Bonnie TB	Dogbey/Bonnie TB	Meyer

SAMPLING							CORING									
SAMPLE TYPE	SAMPLE NUMBER	SET 6 INCHES	2ND 6 INCHES	3RD 6 INCHES	N VALUE	SAMPLE RECOVERY	CORE SIZE	RUN NUMBER	RUN LENGTH	RUN RECOVERY	RQD RECOVERY	PERCENT RECOVERY	RQD	DEPTH (FEET)	SAMPLE TYPE	ELEVATION (FEET)	GRAPHIC LOG	CLASSIFICATION OF MATERIALS	REMARKS
							HQ	31	2.5	0.0	0.0	0	0	150		431			
														151		430			
										151.5									
							HQ	32	2.5	1.1	0.0	44	0	152		429		limestone; dark gray @ 152.0-152.3'	
														153		428		limestone; dark gray @ 152.9-153.2'	
										154.0				154		427			
							HQ	33	2.5	1.7	1.4	68	56					dolomite; gray @ 154.4-154.7'	
														155		426		155.1	
														156		425		BRECCIA; dolomite clasts in a poorly indurated to indurated claystone matrix; light brownish gray; fresh; w/clasts of dolomite; gray; micritic; fresh; strong; hard; (Salina Group - Unit F).	
										156.5									
							HQ	34	2.5	1.2	0.35	48	14	157		424			
														158		423		dolomite; gray @ 158.0-158.2'	
										159.0				159		422			Core box #9 @ 159.0'.
							HQ	35	2.5	0.5	0.35	20	14	160		421			
														161		420			
										161.5									
							HQ	36	2.5	1.3	0.0	52	0	162		419		0°,B,T,No,No,Pl,SR @ 162.4', 162.6', 163.3', 163.6' dolomite; gray @ 162.4-162.8' 90°,J,T,No,No,Pl,SR @ 162.6-162.8', 163.3-163.8'	
														163		418		163.3	
																		DOLOMITE; gray; (Salina Group - Unit F)	
										164.0				164		417		163.8	
																		BRECCIA; dolomite clasts in a poorly indurated to indurated claystone matrix; light brownish gray; fresh; w/clasts of dolomite; gray; micritic; fresh; strong; hard; (Salina Group - Unit F).	
														165					

BLACK & VEATCH

BORING LOG

BORING NO. RB-C10

CLIENT	PROJECT	PROJECT NO.
Detroit Edison	Fermi 3 COL Application	147483

PROJECT LOCATION	COORDINATES	GROUND ELEVATION (DATUM)	TOTAL DEPTH
Monroe, MI	N 6050.7' E 4451.3'	581.1 ft (NAVD 88)	271.3 (feet)

SURFACE CONDITIONS	COORDINATE SYSTEM	DATE START	DATE FINISHED
Earth berm	Plant	08/14/07	08/25/07

LOGGED BY	CHECKED BY	APPROVED BY
Bonnie TB	Dogbey/Bonnie TB	Meyer EM

SAMPLING							CORING										
SAMPLE TYPE	SAMPLE NUMBER	SET 6 INCHES	2ND 6 INCHES	3RD 6 INCHES	N VALUE	SAMPLE RECOVERY	CORE SIZE	RUN NUMBER	RUN LENGTH	RUN RECOVERY	RQD RECOVERY	PERCENT RECOVERY	RQD	DEPTH (FEET)	SAMPLE TYPE	ELEVATION (FEET)	GRAPHIC LOG	CLASSIFICATION OF MATERIALS	REMARKS
							HQ	37	2.5	0.1	0.0	4	0	165		416		dolomite band; gray @ 165.0-165.2	
														166		415			
							HQ	38	2.5	166.5 0.15	0.0	6	0	167		414		dolomite band; gray @ 167.7-167.9'	
														168		413			
							HQ	39	2.5	169.0 0.0	0.0	0	0	169		412			
														170		411			
														171		410			
							HQ	40	2.5	171.5 0.0	0.0	0	0	172		409			
														173		408			
							HQ	41	2.5	174.0 0.8	0.0	32	0	174		407		174.7 BRECCIA; limestone clasts in a poorly indurated claystone matrix; gray; fresh; moderately strong; moderately hard; w/clasts of limestone; gray & grayish brown; strong; hard; (Salina Group - Unit F).	
														175		406			
														176		405			
							HQ	42	2.5	176.5 1.9	1.1	76	44	177		404		0°,B,VN,No,No,Pl,SR @ 177.1'	Water level @ 22.3' prior to drilling on 08/23/07.
														178		403		177.7 LIMESTONE; grayish brown; fresh; strong; hard; 5% vuggy; (Salina Group - Unit F). 0°,B,VN,No,No,Pl,SR @ 177.7', 178.2'	
										179.0				179		402		179.0 BRECCIA; limestone clasts in a poorly indurated claystone matrix; gray; fresh; moderately strong; moderately hard; w/clasts of limestone; gray &	
														180					

BLACK & VEATCH

BORING LOG

BORING NO. RB-C10

CLIENT	PROJECT	PROJECT NO.
Detroit Edison	Fermi 3 COL Application	147483

PROJECT LOCATION	COORDINATES	GROUND ELEVATION (DATUM)	TOTAL DEPTH
Monroe, MI	N 6050.7' E 4451.3'	581.1 ft (NAVD 88)	271.3 (feet)

SURFACE CONDITIONS	COORDINATE SYSTEM	DATE START	DATE FINISHED
Earth berm	Plant	08/14/07	08/25/07

LOGGED BY	CHECKED BY	APPROVED BY
Bonnie TB	Dogbey/Bonnie TB	Meyer

SAMPLE TYPE	SAMPLE NUMBER	SET 6 INCHES	2ND 6 INCHES	3RD 6 INCHES	N VALUE	SAMPLE RECOVERY	DEPTH (FEET)	ELEVATION (FEET)	CLASSIFICATION OF MATERIALS	REMARKS
HQ	43	2.5	0.2	0.0	8	0	180	401	grayish brown; strong; hard; (Salina Group - Unit F).	
							181	400		
			181.5							
HQ	44	2.5	0.0	0.0	0	0	182	399		
							183	398		
			184.0				184	397		
HQ	45	2.5	0.0	0.0	0	0	185	396		
							186	395		
			186.5							
HQ	46	2.5	0.2	0.0	8	0	187	394	limestone band; very dark gray; fresh; strong; hard @ 187.4-187.6'	
							188	393		
			189.0				189	392		
HQ	47	2.5	0.6	0.0	24	0	190	391	190.2 LIMESTONE; dark gray; fresh; strong; hard (Salina Group - Unit F)	
							191	390	190.8 BRECCIA; limestone clasts in a poorly indurated claystone matrix; gray; fresh; moderately strong; moderately hard; w/clasts of limestone; gray & grayish brown; strong; hard; (Salina Group - Unit F).	
			191.5							
HQ	48	2.5	1.5	0.0	60	0	192	389	dolomite; light gray/pale yellow; micritic; fresh; strong; hard @ 192.3-192.7' 40°,J,VN,No,No,Pl,SR @ 192.4'	
							193	388	192.7 LIMESTONE; dark gray; micritic; fresh; 10% vuggy (Salina Group - Unit F) 30°,J,VN,No,No,Pl,SR @ 193.1-193.2', 193.3-193.4'	
			194.0				194	387		
							195		90°,J,VN,No,No,WA,R @ 194.7-196.4'	

5/22/2008 9:25 AM DTE - Fermi 3 Geotech

BLACK & VEATCH

BORING LOG

BORING NO. RB-C10

CLIENT	PROJECT	PROJECT NO.
Detroit Edison	Fermi 3 COL Application	147483

PROJECT LOCATION	COORDINATES	GROUND ELEVATION (DATUM)	TOTAL DEPTH
Monroe, MI	N 6050.7' E 4451.3'	581.1 ft (NAVD 88)	271.3 (feet)

SURFACE CONDITIONS	COORDINATE SYSTEM	DATE START	DATE FINISHED
Earth berm	Plant	08/14/07	08/25/07

LOGGED BY	CHECKED BY	APPROVED BY
Bonnie TB	Dogbey/Bonnie TB	Meyer

SAMPLING							CORING									
SAMPLE TYPE	SAMPLE NUMBER	SET 6 INCHES	2ND 6 INCHES	3RD 6 INCHES	N VALUE	SAMPLE RECOVERY	CORE SIZE	RUN NUMBER	RUN LENGTH	RUN RECOVERY	RQD RECOVERY	PERCENT RECOVERY	RQD	DEPTH (FEET)	SAMPLE TYPE	ELEVATION (FEET)	GRAPHIC LOG	CLASSIFICATION OF MATERIALS	REMARKS
							HQ	49	2.5	1.7	0.0	68	0	195		386		fractured @ 194.7-195.5' 80°,J,VN,No,No,PI,SR @ 195.5-195.7'	
														196		385			
										196.5								196.4 BRECCIA; limestone clasts in a poorly indurated claystone matrix; gray; fresh; moderately strong; moderately hard; w/clasts of limestone; gray & grayish brown; strong; hard; (Salina Group - Unit F). large clasts of limestone @ about 197.5'	
							HQ	50	2.5	1.0	0.0	40	0	197		384			
														198		383			
										199.0				199		382			Core box #10 starts @ 199.0'.
														200		381			
														201		380			
							HQ	51	5.0	2.45	1.4	49	28	202		379			
														203		378			
																		203.5 BRECCIA; dolomite clasts in a poorly indurated to indurated limestone matrix; dark gray; micritic; fresh; strong; hard; w/clasts of dolomite; brownish gray; micritic; fresh; strong; hard; (Salina Group - Unit F). clasts flushed out @ 203.8-204.0'	
										204.0				204		377			
														205		376			
														206		375			
							HQ	52	5.0	2.7	0.9	54	18					limestone @ 206.7-207.1'	
														207		374		dolomite band; grayish brown @ 207.4-207.55'	
														208		373		207.7 DOLOMITE; grayish brown; micritic; fresh; strong; hard; w/limestone bands; (Salina Group - Unit F). shale partings - 0°,B,VN,PI,SR @ 208.15', 208.3', 208.5' 90°,J,VN,No,No,PI,SR @ 208.2-209.0' 0°,B,VN,No,No,PI,SR @ 208.7'	
										209.0				209		372			Rough drilling @ 209.0-212.0'.
														210					

BLACK & VEATCH

BORING LOG

BORING NO. RB-C10

CLIENT	PROJECT	PROJECT NO.
Detroit Edison	Fermi 3 COL Application	147483

PROJECT LOCATION	COORDINATES	GROUND ELEVATION (DATUM)	TOTAL DEPTH
Monroe, MI	N 6050.7' E 4451.3'	581.1 ft (NAVD 88)	271.3 (feet)

SURFACE CONDITIONS	COORDINATE SYSTEM	DATE START	DATE FINISHED
Earth berm	Plant	08/14/07	08/25/07

LOGGED BY	CHECKED BY	APPROVED BY
Bonnie TB	Dogbey/Bonnie TB	Meyer

SAMPLING							CORING										
SAMPLE TYPE	SAMPLE NUMBER	SET 6 INCHES	2ND 6 INCHES	3RD 6 INCHES	N VALUE	SAMPLE RECOVERY	CORE SIZE	RUN NUMBER	RUN LENGTH	RUN RECOVERY	RQD RECOVERY	PERCENT RECOVERY	RQD	DEPTH (FEET)	SAMPLE TYPE	ELEVATION (FEET)	GRAPHIC LOG
														210		371	
														211		370	
							HQ	53	5.0	2.9	0.0	58	0	212		369	
														213		368	
														214		367	
							HQ	54	5.0	2.9	0.95	58	19	215		366	
														216		365	
														217		364	
														218		363	
							HQ	55	5.0	1.2	0.0	24	0	219		362	
														220		361	
														221		360	
														222		359	
														223		358	
														224		357	
														225			

214.0

219.0

224.0

CLASSIFICATION OF MATERIALS

limestone band; brownish gray @ 211.0-211.2'
90°,J,VN,No,No,PI,SR @ 211.2-211.75', 212.8-213.0'
grades w/fossils @ 211.2'
0°,B,VN,No,No,PI,SR @ 211.4', 212.1', 212.5', 212.8', 213.1'
65°,J,VN,No,No,PI,SR @ 211.75-211.5'
limestone; brownish gray/gray @ 212.5-212.8'

213.5

LIMESTONE; gray; micritic; fresh; strong; hard; 5% vuggy; (Salina Group - Unit F)

214.5

DOLOMITE; grayish brown; micritic; fresh; strong; hard; w/fossils (Salina Group - Unit F).
fractured @ 214.5-215.0'
90°,V,N,UK,Fi,PI,SR @ 215.1-215.3'
10°,J,VN,UK,Fi,PI,SR @ 215.3'
convoluted bedding; w/brecciation @ 215.5-215.7'
60°,J,VN,No,No,PI,SR @ 215.7-216.1'
grades gray @ 215.7'
0°,B,VN,No,No,PI,SR @ 216.0', 216.1', 216.2', 216.3'

216.5

LIMESTONE; very dark grayish brown; micritic; fresh; strong; hard (Salina Group - Unit F).
fractured @ 216.5-217.5'
60°,J,VN,No,No,PI,SR @ 217.8-218.2'
0°,B,VN,UK,Sp,PI,SR @ 218.1'

218.2

DOLOMITE; light grayish brown; micritic; fresh; strong; hard; w/fossils (Salina Group - Unit F).
grades light brownish gray @ 218.3'
90°,J,VN,No,No,PI,SR @ 218.4-218.6'
shale parting - 0°,B,VN,PI,SR @ 218.4',218.6'
grades dark grayish brown @ 218.6'

220.0

BRECCIA; poorly indurated claystone matrix; w/clasts of dolomite & limestone; (Salina Group - Unit F).

shale partings - 0°,B,VN,PI,SR @ 221.7',222.0', 222.2',222.4'

breccia; limestone matrix; dark gray; micritic; fresh; strong; hard; w/clasts of dolomite; grayish brown; micritic; fresh; strong; hard @ 222.5-222.8'
40°,J,VN,No,No,PI,SR @ 222.8-223.0'

REMARKS

Water level @ 23.3' prior to drilling on 08/24/07.

BLACK & VEATCH

BORING LOG

BORING NO. RB-C10

CLIENT	PROJECT	PROJECT NO.
Detroit Edison	Fermi 3 COL Application	147483

PROJECT LOCATION	COORDINATES	GROUND ELEVATION (DATUM)	TOTAL DEPTH
Monroe, MI	N 6050.7' E 4451.3'	581.1 ft (NAVD 88)	271.3 (feet)

SURFACE CONDITIONS	COORDINATE SYSTEM	DATE START	DATE FINISHED
Earth berm	Plant	08/14/07	08/25/07

LOGGED BY	CHECKED BY	APPROVED BY
Bonnie TB	Dogbey/Bonnie TB	Meyer

SAMPLING							CORING									
SAMPLE TYPE	SAMPLE NUMBER	SET 6 INCHES	2ND 6 INCHES	3RD 6 INCHES	N VALUE	SAMPLE RECOVERY	CORE SIZE	RUN NUMBER	RUN LENGTH	RUN RECOVERY	RQD RECOVERY	PERCENT RECOVERY	RQD	DEPTH (FEET)	SAMPLE TYPE	ELEVATION (FEET)	GRAPHIC LOG	CLASSIFICATION OF MATERIALS	REMARKS
							HQ	56	2.5	0.3	0.0	12	0	225		356		limestone band; dark gray @ 225.0-225.1' dolomite band; gray @ 225.1-225.4' 30°,J,VN,No,No,Pl,SR @ 225.2-225.3', 225.3-225.4'	
														226		355			
										226.5				227		354		dolomite band; gray @ 227.0-227.1' limestone band; dark gray @ 227.1-227.2' dolomite band; gray @ 227.2-227.4'	
							HQ	57	2.5	0.3	0.0	12	0					10°,J,VN,No,No,Pl,SR @ 227.2', 227.4' 90°,J,VN,No,No,Pl,SR @ 227.25-227.35'	
														228		353			
										229.0				229		352			Core box #11 starts @ 229.0'.
							HQ	58	2.5	0.4	0.0	16	0	230		351		dolomite band; gray @ 230.0-230.4'	
														231		350			
										231.5				232		349			
							HQ	59	2.5	0.7	0.0	28	0					232.4 DOLOMITE; gray; (Salina Group - Unit F) fractured @ 232.4-232.8' 0°,B,VN,Cl,Sp,Pl,SR @ 232.8'	
														233		348		233.1 BRECCIA; poorly indurated claystone matrix; w/clasts of dolomite & limestone; (Salina Group - Unit F).	
										234.0				234		347		grades claystone; gray; slightly weathered; very weak; soft; w/clasts of dolomite; gray @ 234.5	
							HQ	60	2.5	1.1	0.0	44	0	235		346		235.0 LIMESTONE; dark gray; (Salina Group - Unit F). fractured @ 235.0-235.8' 0°,B,VN,No,No,Pl,SR @ 235.0', 235.8', 236.0'	
														236		345		235.5 DOLOMITE; grayish brown; micritic; fresh; strong; hard; (Salina Group - Unit F). 70°,J,VN,No,No,Pl,SR @ 235.8-236.0'	
										236.5				237		344		236.0 BRECCIA; poorly indurated claystone matrix; w/clasts of dolomite & limestone; (Salina Group - Unit F). dolomite band; light grayish brown; 5% vuggy @ 237.1-237.2'	
							HQ	61	2.5	1.9	1.0	76	40	238		343		237.2 DOLOMITE; gray; micritic; fresh; strong; hard; (Salina Group - Unit F). 0°,B,VN,No,No,Pl,SR @ 237.3', 237.55', 237.7' shale partings @ 237.7', 237.75'	
										239.0				239		342		237.7 DOLOMITE; light brownish gray; micritic; fresh;	
														240					

BLACK & VEATCH

BORING LOG

BORING NO. RB-C10

CLIENT	PROJECT		PROJECT NO.
Detroit Edison	Fermi 3 COL Application		147483
PROJECT LOCATION	**COORDINATES**	**GROUND ELEVATION (DATUM)**	**TOTAL DEPTH**
Monroe, MI	N 6050.7' E 4451.3'	581.1 ft (NAVD 88)	271.3 (feet)
SURFACE CONDITIONS	**COORDINATE SYSTEM**	**DATE START**	**DATE FINISHED**
Earth berm	Plant	08/14/07	08/25/07
LOGGED BY	**CHECKED BY**	**APPROVED BY**	
Bonnie TB	Dogbey/Bonnie TB	Meyer	

SAMPLING							CORING									
SAMPLE TYPE	SAMPLE NUMBER	SET 6 INCHES	2ND 6 INCHES	3RD 6 INCHES	N VALUE	SAMPLE RECOVERY	CORE SIZE	RUN NUMBER	RUN LENGTH	RUN RECOVERY	RQD RECOVERY	PERCENT RECOVERY	RQD	DEPTH (FEET)	SAMPLE TYPE	ELEVATION (FEET)	GRAPHIC LOG	CLASSIFICATION OF MATERIALS	REMARKS
							HQ	62	5.0	4.5	2.0	90	40	240		341		strong; hard; w/fossils; (Salina Group - Unit E). shale partings - 0°,B,VN,Pl,SR @ 237.8',238.2',238.9' fossils @ 237.75-237.7',238.3-238.4',238.75-238.9' 70°,J,VN,No,No,Pl,R @ 239.4-239.7' 60°,J,VN,No,No,Pl,SR @ 239.7-240.0' 80°,J,T,No,No,Ir,R @ 240.8-241.7' fossils @ 241.3-244.0' 55°,J,T,No,No,Pl,SR @ 241.5-241.7' 20°,J,T,No,No,Pl,SR @ 241.7-241.8' 90°,J,T,No,No,Pl,SR @ 241.8-242.1' 10°,J,T,No,No,Pl,SR @ 242.05-242.1' 0°,B,T,No,No,Pl,SR @ 242.7', 243.3', 243.4', 243.5'	
														241		340			
														242		339			
														243		338			
			244.0											244		337			
							HQ	63	5.0	4.8	3.7	96	74	245		336		shale partings - 0°,B,VN,Pl,SR @ 244.2',245.4', 246.35' fossils @ 244.4-244.8', 245.0-245.45', 246.2-246.4', 246.6-247.3' 10°,J,T,No,No,Pl,SR @ 245.1' 90°,J,T,No,No,Pl,SR @ 245.1-245.2' shale partings @ 245.45', 245.55', 245.65' 0°,B,T,No,No,Pl,SR @ 245.6', 246.85'	
														246		335			
														247		334		80°,J,T,No,No,Pl,SR @ 246.7-246.85'	
														248		333		fossils @ 248.0-248.6'	
			249.0											249		332		fossils @ 248.8-250.2'	Core box #12 starts @ 249.0'.
							HQ	64	5.0	5.0	4.8	100	96	250		331			
														251		330		0°,J,VN,No,No,Pl,SR @ 250.6' 0°,J,VN,Cl,Sp,Pl,SR @ 250.85',250.95'	
																		251.0	
														252		329		DOLOMITE; gray; micritic; fresh; strong; hard; w/ shale partings; (Salina Group - Unit E). 0°,J,VN,Cl,Sp,Pl,SR @ 251.3'	
																		251.4	
														253		328		DOLOMITE; grayish brown; micritic; fresh; strong; hard; w/anhydrite nodules & veins; (Salina Group - Unit E).	
																		252.9	
														254		327		DOLOMITE; gray; micritic; fresh; strong; hard; 5% vugs; anhydrite filled; (Salina Group - Unit E). shale parting - 10°,V,Pl,S @ 253.15' 0°,J,VN,No,No,Pl,SR @ 254.1', 254.2', 254.3' shale band; very dark gray @ 254.3-254.5'	
			254.0											255					
																		254.5	

BLACK & VEATCH

BORING LOG

BORING NO. RB-C10
SHEET 18 OF 19

CLIENT	PROJECT	PROJECT NO.
Detroit Edison	Fermi 3 COL Application	147483

PROJECT LOCATION	COORDINATES	GROUND ELEVATION (DATUM)	TOTAL DEPTH
Monroe, MI	N 6050.7' E 4451.3'	581.1 ft (NAVD 88)	271.3 (feet)

SURFACE CONDITIONS	COORDINATE SYSTEM	DATE START	DATE FINISHED
Earth berm	Plant	08/14/07	08/25/07

LOGGED BY	CHECKED BY	APPROVED BY
Bonnie TB	Dogbey/Bonnie TB	Meyer

SAMPLING							CORING									
SAMPLE TYPE	SAMPLE NUMBER	SET 6 INCHES	2ND 6 INCHES	3RD 6 INCHES	N VALUE	SAMPLE RECOVERY	CORE SIZE	RUN NUMBER	RUN LENGTH	RUN RECOVERY	RQD RECOVERY	PERCENT RECOVERY	RQD	DEPTH (FEET)	SAMPLE TYPE	ELEVATION (FEET)	GRAPHIC LOG	CLASSIFICATION OF MATERIALS	REMARKS
							HQ	65	5.0	4.8	4.1	96	82	255		326		DOLOMITE; grayish brown; micritic; fresh; strong; hard; w/shale & gypsum partings; (Salina Group - Unit E). convoluted bedding @ 254.5-255.1' 20°,J,VN,Cl,Fi,Pl,S @ 255.7-256.0'	
														256		325		255.8 DOLOMITE; gray to grayish brown; micritic; fresh; strong; hard; w/gypsum nodules & veins along w/shale partings; (Salina Group - Unit E). 0°,J,VN,No,No,Pl,SR @ 257.4'	
														257		324			
														258		323		257.9 DOLOMITE; grayish brown; micritic; fresh; strong; hard; w/gypsum bands, nodules, & shale partings; (Salina Group - Unit E). 0°,B,VN,Cl,Fi,Pl,SR @ 257.95', 260.05', 260.1'	
			259.0				HQ	66	1.1	1.1	0.65	100	59	259		322		0°,J,VN,No,No,Pl,SR @ 259.2', 259.3'	Core box #13 starts @ 259.0'
														260		321		claystone band @ 259.95-260.5'	
			260.1				HQ	67	3.9	3.9	3.7	100	95	261		320		0°,J,VN,No,No,Pl,S @ 260.7' 261.2 DOLOMITE; gray; micritic; fresh; strong; hard; w/ shale parting; (Salina Group - Unit E). 0°,J,VN,No,No,Pl,S @ 261.3', 262.1'	
														262		319		262.2 DOLOMITE; light brownish gray; micritic; fresh; strong; hard; w/gypsum veins parting & shale parting; (Salina Group - Unit E). 20°,V,W,Gy,Fi,Pl,S @ 262.5-262.6', 262.8-262.9', 263.85-263.95' pale yellow @ 262.6-263.0' 0°,J,VN,No,No,Pl,S @ 262.8', 263.45', 263.8' light gray @ 263.1-263.5' 0°,V,MW to W,Gy,Fi,Pl,S @ 264.0' 0°,J,VN,Gy,Sp,Pl,SR @ 264.2', 264.8', 264.9'	Very Hard drilling @ 262'
														263		318			
			264.0				HQ	68	5.0	5.0	4.7	100	94	264		317			
														265		316			
														266		315		265.3 DOLOMITE; brownish gray; micritic; fresh; strong; hard; w/gypsum veins & nodule, anhydrite veins, & shale partings; (Salina Group - Unit E). 0°,V,MW to W,Gy,Fi,Pl,S @ 265.4', 266.2-266.4', 266.5-266.6', 266.8-266.9' 0°,J,VN,Gy,Sp,Pl,SR @ 265.8', 266.9' 0°,V,MW,anhydrite,Fi,Pl,S @ 266.4', 266.55' convoluted bedding w/gypsum nodules @ 267.1-267.4'	
														267		314			
														268		313		267.4 DOLOMITE; light brownish gray; micritic; fresh; strong; hard; (Salina Group - Unit E). 0°,J,VN,Gy,Sp,Pl,SR @ 267.5'	
														269		312		268.5 DOLOMITE; gray; micritic; fresh; strong; hard; w/ shale partings; (Salina Group - Unit E).	
			269.0											270					

BLACK & VEATCH

BORING LOG

BORING NO. RB-C10
SHEET 19 OF 19

CLIENT	PROJECT	PROJECT NO.
Detroit Edison	Fermi 3 COL Application	147483

PROJECT LOCATION	COORDINATES	GROUND ELEVATION (DATUM)	TOTAL DEPTH
Monroe, MI	N 6050.7' E 4451.3'	581.1 ft (NAVD 88)	271.3 (feet)

SURFACE CONDITIONS	COORDINATE SYSTEM	DATE START	DATE FINISHED
Earth berm	Plant	08/14/07	08/25/07

LOGGED BY	CHECKED BY	APPROVED BY
Bonnie TB	Dogbey/Bonnie TB	Meyer

SAMPLING							CORING									
SAMPLE TYPE	SAMPLE NUMBER	SET 6 INCHES	2ND 6 INCHES	3RD 6 INCHES	N VALUE	SAMPLE RECOVERY	CORE SIZE	RUN NUMBER	RUN LENGTH	RUN RECOVERY	RQD RECOVERY	PERCENT RECOVERY	RQD	DEPTH (FEET)	SAMPLE TYPE	ELEVATION (FEET)	GRAPHIC LOG	CLASSIFICATION OF MATERIALS	REMARKS
							HQ	69	2.3	2.3	2.1	100	91	270		311		shale parting - 0°,B,VN,Sp,Pl,S @ 270.55' shale parting - 0°,B,VN,Sp,WA,S @ 270.7'	
														271		310			Bottom of Boring @ 271.3'. Water level @ 22.7' @ completion of drilling. Boring caved @ 139.2'. Boring backfilled from 271.3' w/ bentonite chips to 50' below ground surface on 09/11/07. Continued w/ bentonite chips to 10' below ground surface on 09/20/07. Continued w/ bentonite chips to 3' below ground surface, then gravel to surface on 09/21/07.
														272		309			
														273		308			
														274		307			
														275		306			
														276		305			
														277		304			
														278		303			
														279		302			
														280		301			
														281		300			
														282		299			
														283		298			
														284		297			
														285					

5/22/2008 9:25 AM DTE - Fermi 3 Geotech

BLACK & VEATCH

BORING LOG

BORING NO. RB-C11

CLIENT	PROJECT	PROJECT NO.
Detroit Edison	Fermi 3 COL Application	147483

PROJECT LOCATION	COORDINATES	GROUND ELEVATION (DATUM)	TOTAL DEPTH
Monroe, MI	N 6051.8' E 4534.6'	580.0 ft (NAVD 88)	135.5 (feet)

SURFACE CONDITIONS	COORDINATE SYSTEM	DATE START	DATE FINISHED
Gravel Parking Area	Plant	08/23/07	08/28/07

LOGGED BY	CHECKED BY	APPROVED BY
Grainger/Mass/Bonnie TB	Dogbey/Bonnie TB	Meyer

SAMPLING: SAMPLE TYPE	SAMPLE NUMBER	SET 6 INCHES	2ND 6 INCHES	3RD 6 INCHES	N VALUE	SAMPLE RECOVERY	CORING: CORE SIZE	RUN NUMBER	RUN LENGTH	RUN RECOVERY	RQD RECOVERY	PERCENT RECOVERY	RQD	DEPTH (FEET)	SAMPLE TYPE	ELEVATION (FEET)	GRAPHIC LOG	CLASSIFICATION OF MATERIALS	REMARKS
														0		580		Gravelly COBBLES - About 60% angular; cubical to elongated; hard; cobble w/max size 10"; about 25% fine to coarse, angular, hard gravel; about 10% fine to coarse, angular, hard sand; about 5% fines; gray; moist; strong reaction w/HCl; homogeneous; (Fill).	Boring advanced w/vacuum excavation.
														1		579			
														2		578			
														3		577			
										3.5				4		576			Below 3.5' continued w/4" ID sonic continuous sampler w/ nominal 6" temporary steel casing advanced w/sampler.
S	1												2.5	5		575			
														6		574			
														7		573			
														8		572			Discrete sample SC1 collected from S1.
														9		571			
										10.0				10		570			
														11		569			
														12		568			
S	2												3.5	13		567		PEAT (PT) - About 100% plant tissue; black; moist; fibrous. (13.0)	Discrete sample SC2 collected from S2.
														14		566		Lean CLAY (CL) - About 100% medium plasticity, medium toughness, no dilatancy, high dry strength fines; dark greenish gray & brown, mottled; moist; no reaction w/HCl; homogeneous; (Lacustrine Deposit). (13.8)	
														15		565			

BLACK & VEATCH

BORING LOG

BORING NO. RB-C11

CLIENT	PROJECT	PROJECT NO.
Detroit Edison	Fermi 3 COL Application	147483

PROJECT LOCATION	COORDINATES	GROUND ELEVATION (DATUM)	TOTAL DEPTH
Monroe, MI	N 6051.8' E 4534.6'	580.0 ft (NAVD 88)	135.5 (feet)

SURFACE CONDITIONS	COORDINATE SYSTEM	DATE START	DATE FINISHED
Gravel Parking Area	Plant	08/23/07	08/28/07

LOGGED BY	CHECKED BY	APPROVED BY
GEO for TB & Grainger/Mass/Bonnie TB	Dogbey/Bonnie TB	Meyer

SAMPLING							CORING							DEPTH (FEET)	SAMPLE TYPE	ELEVATION (FEET)	GRAPHIC LOG	CLASSIFICATION OF MATERIALS	REMARKS
SAMPLE TYPE	SAMPLE NUMBER	SET 6 INCHES	2ND 6 INCHES	3RD 6 INCHES	N VALUE	SAMPLE RECOVERY	CORE SIZE	RUN NUMBER	RUN LENGTH	RUN RECOVERY	RQD RECOVERY	PERCENT RECOVERY	RQD						
														15		565			Set nominal 6" temporary steel casing to 15.5'. Below 15.5' continued w/4½" tricone bit using water as drilling fluid. SPT performed w/D-50 automatic hammer. Water level @ 15.0' prior to drilling on 08/24/07. PP = 2.5 TSF @ 17.5'. TV = 0.6 TSF @ 17.5'.
										15.5									
TW	3					1.3								16		564		Lean CLAY (CL) - About 100% medium plasticity, low toughness, no dilatancy, high dry strength fines; dark grayish brown; stiff; moist; weak reaction w/HCl; homogeneous; (Lacustrine Deposit).	
														17		563			
														18		562			
										18.5									
SPT	4	2	5	8	13	1.5								19		561		Lean CLAY with Sand (CL) - About 80% medium plasticity, medium toughness, no dilatancy, high dry strength fines; about 20% fine to coarse, subrounded to angular, hard sand; trace fine, subrounded, flat, hard gravel; grayish brown; firm; moist; strong reaction w/HCl; homogeneous; (Glacial Till).	
														20		560			
														21		559			
TW	5					1.7								22		558			
														23		557			PP = 4.5 TSF @ 22.5'. T = 0.71 TSF @ 22.5'.
										23.5									
SPT	6	8	25	37	62	1.3								24		556		Sandy Lean CLAY (CL) - About 65% medium plasticity, medium toughness, no dilatancy, high dry strength fines; about 25% fine to coarse, subrounded to angular, hard sand; about 10% fine to coarse, subangular, hard gravel, fragments fracture w/1 hammer blow; gray; very hard; moist; strong reaction w/HCl; homogeneous; (Glacial Till).	
														25		555			
										26.0									
SPT	7	10	15	50/0"	50+	0.8								26		554		Clayey SAND (SC) - About 60% fine to coarse, subangular to angular, hard sand; about 35% medium plasticity, medium toughness, no dilatancy, high dry strength fines; about 5% fines, subangular, hard gravel; gray; dense; wet; strong reaction w/HCl; homogeneous; (Glacial Till).	
										27.0				27		553			Tricone refusal @ 27.0'. Below 27.0' continued w/4" ID sonic continuous sampler w/ nominal 6" temporary steel casing advanced
														27.0					
														28		552		DOLOMITE; crystalline; gray; micritic; slightly weathered; strong; hard; highly fractured; (Bass Islands Group).	
S	8					3.5								29		551			
														30		550			

BLACK & VEATCH

BORING LOG

BORING NO. RB-C11

CLIENT	PROJECT	PROJECT NO.
Detroit Edison	Fermi 3 COL Application	147483

PROJECT LOCATION	COORDINATES	GROUND ELEVATION (DATUM)	TOTAL DEPTH
Monroe, MI	N 6051.8' E 4534.6'	580.0 ft (NAVD 88)	135.5 (feet)

SURFACE CONDITIONS	COORDINATE SYSTEM	DATE START	DATE FINISHED
Gravel Parking Area	Plant	08/23/07	08/28/07

LOGGED BY	CHECKED BY	APPROVED BY
EGG for TB for Grainger/Mass/Bonnie TB	Dogbey/Bonnie TB	Meyer

SAMPLING: SAMPLE TYPE	SAMPLE NUMBER	SET 6 INCHES	2ND 6 INCHES	3RD 6 INCHES	N VALUE	SAMPLE RECOVERY	CORING: CORE SIZE	RUN NUMBER	RUN LENGTH	RUN RECOVERY	RQD RECOVERY	PERCENT RECOVERY	RQD	DEPTH (FEET)	SAMPLE TYPE	ELEVATION (FEET)	GRAPHIC LOG	CLASSIFICATION OF MATERIALS	REMARKS
														30		550			w/sampler. Sonic core stored in box labeled SC1. Set nominal 6" temporary steel casing to 30.5'. Below 30.5' continued w/ triple tube wire line core barrel w/diamond bit using water as drilling fluid. Water level @ 4.3' @ Start of coring
			30.5															30.8	
							HQ	1	4.0	3.8	1.1	95	28	31		549		DOLOMITE; crystalline; grayish brown; micritic; fresh; strong; hard; banded; (Bass Islands Group). 90°,J,VN,No,No,Pl,SR @ 31.25-32.25' 0°,B,VN,No,No,Pl,SR @ 31.25', 31.45', 32.8', 33.38'	
														32		548			
																		shale parting - 0°,B,VN,Sp,Pl,SR @ 32.25'	
														33		547			
																		90°,J,VN,No,No,Pl,SR @ 33.65-34.5', 33.65-34.1'	
														34		546		shale parting - 0°,B,VN,Sp,Pl,SR @ 33.65', 34.1'	
			34.5															90°,J,VN,No,No,Pl,SR @ 34.5-35.0'	
														35		545		0°,B,VN,No,No,Pl,SR @ 34.7', 34.8', 35.0', 35.6' fractured @ 35.0-35.1' anhydrite filled vug @ 35.1'	
														36		544		shale parting - 0°,B,VN,Fi,Pl,SR @ 35.95'	
																		36.1	
							HQ	2	5.0	5.0	3.9	100	78	37		543		DOLOMITE; slightly mottled; light gray & dark gray; micritic; fresh; strong; hard; (Bass Islands Group).	
																		36.6	
																		SHALE; very dark gray; very fine grained; fresh; weak; low hardness; (Bass Islands Group).	
																		36.7	
														38		542		DOLOMITE; light gray and very dark gray; mottled; micritic; fresh; strong; hard; (Bass Islands Group).	
																		0°,B,T,No,No,Pl,SR @ 38.5'	
														39		541		70°,J,T,Cl,Sp,Pl,SR @ 38.5-38.7'	
																		38.7	
			39.5															SHALE; very dark gray; very fine grained; fresh; weak; low hardness; (Bass Island Group).	
																		38.8	
														40		540		DOLOMITE; dark grayish brown; micritic; fresh; strong; hard; w/shell fossil imprint; (Bass Islands Group).	
														41		539		shale parting - 0°,B,VN,Sp,Pl,SR @ 39.65' 0°,B,VN,No,No,Pl,SR @ 40.0' shale parting - 0°,B,VN,Sp,Pl,SR @ 40.1'	
																		40.2	
							HQ	3	5.0	5.0	3.7	100	74	42		538		DOLOMITE; dark grayish brown; micritic; fresh; strong; hard; w/fossil voids up to 0.4"; (Bass Islands Group). 50°,J,T,No,No,Pl,SR @ 40.3-40.55' 40°,J,T,No,No,Pl,SR @ 40.6-40.8' shale partings - 0°,B,VN,Sp,Pl,SR @ 41.2',41.3',41.8'	
														43		537			
														44		536			
			44.5																Core box #2 starts @ 44.5'.
														45		535		pitted @ 44.8-45.2'	

BLACK & VEATCH

BORING LOG

BORING NO. RB-C11

CLIENT	PROJECT	PROJECT NO.
Detroit Edison	Fermi 3 COL Application	147483

PROJECT LOCATION	COORDINATES	GROUND ELEVATION (DATUM)	TOTAL DEPTH
Monroe, MI	N 6051.8' E 4534.6'	580.0 ft (NAVD 88)	135.5 (feet)

SURFACE CONDITIONS	COORDINATE SYSTEM	DATE START	DATE FINISHED
Gravel Parking Area	Plant	08/23/07	08/28/07

LOGGED BY	CHECKED BY	APPROVED BY
GEO for TJB Grainger/Mass/Bonnie TJB	Dogbey/Bonnie TJB	Meyer

SAMPLING: SAMPLE TYPE	SAMPLE NUMBER	SET 6 INCHES	2ND 6 INCHES	3RD 6 INCHES	N VALUE	SAMPLE RECOVERY

CORING: CORE SIZE	RUN NUMBER	RUN LENGTH	RUN RECOVERY	RQD RECOVERY	PERCENT RECOVERY	RQD
HQ	4	5.0	5.0	4.1	100	82
HQ	5	5.0	5.0	3.7	100	74
HQ	6	5.0	4.8	3.4	96	68

DEPTH (FEET)	SAMPLE TYPE	ELEVATION (FEET)	GRAPHIC LOG	CLASSIFICATION OF MATERIALS	REMARKS
45		535		0°,B,VN,No,No,Pl,SR @ 44.9', 45.1', 48.1', 48.5'	
				45.5	
46		534		DOLOMITE; grayish brown; micritic; fresh; strong; hard; banded; w/stylolites; (Bass Islands Group).	
				20°,J,VN,No,No,Pl,SR @ 46.5-46.7', 46.3-46.4'	
47		533			
48		532		no stylolites or banding @ 47.9-48.5'	
49		531		grades dark grayish brown @ 48.75'	
				90°,J,T,No,No,Pl,SR @ 48.75-48.9' (2 parallel joints)	
				48.9	
				DOLOMITE; grayish brown; micritic; fresh; strong; hard; (Bass Islands Group).	
50		530		90°,J,VN,No,No,Ir,R @ 50.4-51.2'	
51		529		fractured @ 50.8-50.9'	
				0°,B,VN,No,No,Pl,SR @ 51.2'	
52		528		slightly mottled dolomite, gray & dark gray @ 51.35-51.4'	
				0°,J,VN,Cl,Sp,Pl,SR @ 51.35'	
				grades very fine grained @ 51.5'	
				pyrite (0.01") @ 51.5'	
53		527		51.7	
				DOLOMITE; oolitic; light brownish gray; very fine grained; fresh; strong; hard; (Bass Islands Group).	
				0°,J,VN,Cl,Sp,Pl,SR @ 51.75'	
54		526		0°,J,VN,No,No,Pl,SR @ 52.4'	
				0°,J,T,Cl,Fi,Ir,SR (slightly weathered) @ 54.5'	
				54.6	
55		525		DOLOMITE; grayish brown; micritic; fresh; strong; hard; (Bass Islands Group).	
				54.9	
56		524		DOLOMITE; brecciated, healed; grayish brown; fresh; strong; hard; (Bass Islands Group).	
				shale parting @ 55.5'	
				90°,J,VN,No,No,Pl,SR @ 55.6-57.1'	
				55.8	
57		523		DOLOMITE; grayish brown; micritic; fresh; strong; hard; (Bass Islands Group).	Core box #3 starts @ 56.9'.
				shale partings - 0°,B,VN,Sp,Pl,SR @ 55.9',56.1',56.6', 57.55'	
58		522		convoluted bedding @ 56.2-57.7'	
				60°,J,T,No,No,Pl,SR @ 57.3-57.8'	
				shale parting (0.25") @ 57.8-57.85'	
				58.2	
59		521		DOLOMITE; grayish brown; micritic; fresh; strong; hard; (Bass Islands Group).	
				10°,J,VN,No,No,Pl,SR @ 58.2', 58.25'	
60		520		shale partings - 0°,B,VN,Sp,Pl,SR @ 58.7', 59.3',60.0'	

49.5 54.5 59.5

BLACK & VEATCH

BORING LOG

BORING NO. RB-C11

CLIENT	PROJECT	PROJECT NO.
Detroit Edison	Fermi 3 COL Application	147483

PROJECT LOCATION	COORDINATES	GROUND ELEVATION (DATUM)	TOTAL DEPTH
Monroe, MI	N 6051.8' E 4534.6'	580.0 ft (NAVD 88)	135.5 (feet)

SURFACE CONDITIONS	COORDINATE SYSTEM	DATE START	DATE FINISHED
Gravel Parking Area	Plant	08/23/07	08/28/07

LOGGED BY	CHECKED BY	APPROVED BY
Grainger/Mass/Bonnie TB for TB	Dogbey/Bonnie TB	Meyer EM

SAMPLING							CORING										
SAMPLE TYPE	SAMPLE NUMBER	SET 6 INCHES	2ND 6 INCHES	3RD 6 INCHES	N VALUE	SAMPLE RECOVERY	CORE SIZE	RUN NUMBER	RUN LENGTH	RUN RECOVERY	RQD RECOVERY	PERCENT RECOVERY	RQD	DEPTH (FEET)	SAMPLE TYPE	ELEVATION (FEET)	GRAPHIC LOG

CLASSIFICATION OF MATERIALS	REMARKS
60.2	
DOLOMITE; greenish gray & dark greenish gray, banded; micritic; fresh; strong; hard; w/stylolites; (Bass Islands Group). 90°,J,VN,No,No,Pl,SR @ 60.5-61.1', 62.2-62.9' fractured @ 61.0-61.3' shale parting - 0°,B,VN,Fi,Pl,SR @ 61.3' 10° bedding angle @ 61.5-62.2' shale parting - 10°,B,VN,Sp,Pl,SR @ 62.1' 0°,B,T,No,No,Pl,SR @ 62.4'	
fractured @ 63.0-63.1'	
63.1	
DOLOMITE; light brownish gray; micritic; fresh; strong; hard; w/stylolites; (Bass Islands Group). 30°,J,T,No,No,Pl,SR @ 64.3-64.5'	
65.0	
DOLOMITE; brecciated, healed; light brownish gray; micritic; fresh; strong; hard; (Bass Islands Group).	
66.1	
DOLOMITE; light brownish gray; micritic; fresh; strong; hard; (Bass Islands Group).	
67.5	
DOLOMITE; brecciated, healed; light brownish gray; micritic; fresh; strong; hard; w/stylolites; (Bass Islands Group). 60°,J,T,No,No,Ir,R @ 68.1-68.4' fractured @ 68.2-68.6' 90°,J,T,No,No,Pl,SR @ 68.6-69.0' anhydrite filled vugs @ 69.1-69.5'	Core box #4 starts @ 69.5'.
	No drilling fluid return @ 72.0'.
72.9	
DOLOMITE; light grayish brown; micritic; fresh; strong; hard; w/stylolites; (Bass Islands Group). 75°,J,VN,No,No,Pl,R @ 73.9-74.0' 60°,J,VN,No,No,Pl,R @ 74.2-74.3' 90°,J,T,No,No,Pl,SR @ 74.3-74.4', 74.6-74.9', 75.1-75.6'	

RUN NUMBER	RUN LENGTH	RUN RECOVERY	RQD RECOVERY	PERCENT RECOVERY	RQD	DEPTH (FEET)	ELEVATION (FEET)
HQ 7	5.0	5.0	2.6	100	52	60	520
						61	519
						62	518
						63	517
						64	516
		64.5				65	515
HQ 8	5.0	5.0	3.7	100	74	66	514
						67	513
						68	512
						69	511
		69.5				70	510
						71	509
HQ 9	5.0	4.8	4.2	96	84	72	508
						73	507
						74	506
		74.5				75	505

BLACK & VEATCH

BORING LOG

BORING NO. RB-C11

CLIENT	PROJECT	PROJECT NO.
Detroit Edison	Fermi 3 COL Application	147483

PROJECT LOCATION	COORDINATES	GROUND ELEVATION (DATUM)	TOTAL DEPTH
Monroe, MI	N 6051.8' E 4534.6'	580.0 ft (NAVD 88)	135.5 (feet)

SURFACE CONDITIONS	COORDINATE SYSTEM	DATE START	DATE FINISHED
Gravel Parking Area	Plant	08/23/07	08/28/07

LOGGED BY	CHECKED BY	APPROVED BY
Grainger/Mass/Bonnie TB for TB	Dogbey/Bonnie TB	Meyer EM

SAMPLING: SAMPLE TYPE	SAMPLE NUMBER	SET 6 INCHES	2ND 6 INCHES	3RD 6 INCHES	N VALUE	SAMPLE RECOVERY

CORING: CORE SIZE	RUN NUMBER	RUN LENGTH	RUN RECOVERY	RQD RECOVERY	PERCENT RECOVERY	RQD
HQ	10	5.0	4.9	2.6	98	52
			79.5			
HQ	11	5.0	4.2	3.9	84	78
			84.5			
HQ	12	5.0	4.8	3.6	96	72
			89.5			

DEPTH (FEET)	SAMPLE TYPE	ELEVATION (FEET)	GRAPHIC LOG	CLASSIFICATION OF MATERIALS	REMARKS
75		505		fractured @ 74.6-74.9'	
				75.1	
				DOLOMITE; light gray; micritic; fresh; strong; hard; (Bass Islands Group).	
76		504		0°,B,VN,No,No,Pl,SR @ 75.3', 75.4', 75.6'	
				30°,J,T,No,No,Pl,SR @ 75.6-75.9'	
77		503		shale partings - 0°,B,VN,Sp,Pl,SR @ 76.9',77.35', 78.25'	
78		502			
				shale parting @ 78.4'	
				dolomite; mottled; light gray & dark gray @ 78.5-78.6'	
79		501		78.6	
				SHALE; very dark gray; fresh to slightly weathered; strong to moderately strong; hard to low hardness; (Bass Islands Group).	
				79.0	
80		500		DOLOMITE; light grayish brown; micritic; fresh; strong; hard; w/stylolites; (Bass Islands Group).	
				90°,J,VN,No,No,Pa,SR @ 79.0-79.5'	
81		499		0°,B,VN,No,No,Pl,SR @ 80.0'	
				10°,J,VN,No,No,Pl,R @ 80.3-80.4'	
				10°,J,VN,Cl,Sp,WA,R @ 80.9'	
82		498		calcite filled fractures @ 81.3-81.5'	
				brecciated, healed @ 81.6-81.8'	
83		497		brecciated, healed @ 83.2-83.4'	
84		496		shale parting - 0°,B,VN,Sp,Pl,SR @ 84.0'	
				90°,J,T,No,No,Pl,SR @ 84.1-84.4', 85.0-85.1'	Core box #5 starts @ 84.5'.
85		495		0°,B,VN,No,No,Pl,SR @ 85.2'	
86		494		40°,J,T,No,No,Pl,SR @ 85.8-85.9'	
				20°,J,VN,Cl,Sp,Pl,SR @ 86.2-86.3'	
				shale parting - 0°,B,VN,Fi,Pl,SR @ 86.4'	
87		493		86.5	
				DOLOMITE; brecciated, healed; light grayish brown; micritic; fresh; strong; hard; w/stylolites; (Bass Islands Group).	
88		492		30°,J,VN,No,No,Pl,SR @ 86.8-86.9'	
				88.8	
89		491		DOLOMITE; light grayish brown; micritic; fresh; strong; hard; banded; (Bass Islands Group).	
				10°,J,VN,Cl,Sp,Pl,SR @ 88.8', 89.1'	
90		490		brecciated, healed @ 89.2-89.4'	

BLACK & VEATCH **BORING LOG**

BORING NO. RB-C11
SHEET 7 OF 10

CLIENT	PROJECT	PROJECT NO.
Detroit Edison	Fermi 3 COL Application	147483

PROJECT LOCATION	COORDINATES	GROUND ELEVATION (DATUM)	TOTAL DEPTH
Monroe, MI	N 6051.8' E 4534.6'	580.0 ft (NAVD 88)	135.5 (feet)

SURFACE CONDITIONS	COORDINATE SYSTEM	DATE START	DATE FINISHED
Gravel Parking Area	Plant	08/23/07	08/28/07

LOGGED BY	CHECKED BY	APPROVED BY
Grainger/Mass/Bonnie TB for TB	Dogbey/Bonnie TB	Meyer

SAMPLING: SAMPLE TYPE	SAMPLE NUMBER	SET 6 INCHES	2ND 6 INCHES	3RD 6 INCHES	N VALUE	SAMPLE RECOVERY

CORING: CORE SIZE	RUN NUMBER	RUN LENGTH	RUN RECOVERY	RQD RECOVERY	PERCENT RECOVERY	RQD
HQ	13	5.0	5.0	3.9	100	78
HQ	14	5.0	5.0	3.8	100	76
HQ	15	5.0	4.3	3.0	86	60

DEPTH (FEET)	SAMPLE TYPE	ELEVATION (FEET)	GRAPHIC LOG	CLASSIFICATION OF MATERIALS	REMARKS
90		490		shale partings - 0°,B,VN,Sp,Pl,SR @ 90.4',90.6',91.1'	
91		489		50°,J,T,No,No,Pl,SR @ 91.0'	
				91.3	
92		488		DOLOMITE; light grayish brown; micritic; fresh; strong; hard; laminated; w/stylolites; (Bass Islands Group). shale partings - 0°,B,VN,Sp,Pl,SR @ 91.5',91.6', 91.75',92.0',92.3'	
93		487		shale partings - 0°,B,VN,Sp,Pl,SR @ 92.85',93.3'	
94		486		shale partings - 0°,B,VN,Sp,Pl,SR @ 94.3',94.05'	
				94.6	
95		485		DOLOMITE; light brownish gray; micritic; fresh; strong; hard; w/stylolites; (Bass Islands Group). fractured @ 95.0-95.1' shale partings - 0°,B,T,Sp,Pl,SR @ 95.0',95.1',95.6',	
96		484		96.5',96.55', 96.65',96.75',97.1' grades grayish brown @ 96.2' 90°,J,T,No,No,Pl,SR @ 96.5-96.65'	
97		483		10°,J,T,Cl,Sp,Pl,SR @ 96.85'	
98		482		shale partings - 0°,B,T,Sp,Pl,SR @ 98.1',98.3',98.5'	Core box #6 starts @ 98.5'.
99		481			
100		480		shale partings - 0°,B,VN,Sp,Pl,SR @ 99.8',102.1' 60°,J,VN,No,No,Pl,SR @ 100.2-100.5'	
101		479			
102		478		30°,J,VN,No,No,Pl,SR @ 102.0-102.1'	
				102.4	
103		477		60°,J,VN,Cl,Sp,Pl,SR @ 102.35-102.65' DOLOMITE; light olive brown to grayish brown; micritic; fresh; strong; hard w/stylolites; (Bass Islands Group). 10°,J,VN,Cl,Sp,Pl,SR @ 102.8',103.4',103.5'	
104		476		30°,J,VN,Cl,Sp,Pl,SR @ 102.9' 80°,J,VN,No,No,Pl,SR @ 104.0-104.1'	
105		475		fractured @ 104.5-104.6'	

94.5 99.5 104.5

5/8/2008 10:14 AM DTE - Fermi 3 Geotech

BLACK & VEATCH

BORING LOG

BORING NO. RB-C11
SHEET 8 OF 10

CLIENT	PROJECT	PROJECT NO.
Detroit Edison	Fermi 3 COL Application	147483

PROJECT LOCATION	COORDINATES	GROUND ELEVATION (DATUM)	TOTAL DEPTH
Monroe, MI	N 6051.8' E 4534.6'	580.0 ft (NAVD 88)	135.5 (feet)

SURFACE CONDITIONS	COORDINATE SYSTEM	DATE START	DATE FINISHED
Gravel Parking Area	Plant	08/23/07	08/28/07

LOGGED BY	CHECKED BY	APPROVED BY
Grainger/Mass/Bonnie TB	Dogbey/Bonnie TB	Meyer EM

SAMPLING							CORING									
SAMPLE TYPE	SAMPLE NUMBER	SET 6 INCHES	2ND 6 INCHES	3RD 6 INCHES	N VALUE	SAMPLE RECOVERY	CORE SIZE	RUN NUMBER	RUN LENGTH	RUN RECOVERY	RQD RECOVERY	PERCENT RECOVERY	RQD	DEPTH (FEET)	SAMPLE TYPE	ELEVATION (FEET)	GRAPHIC LOG	CLASSIFICATION OF MATERIALS	REMARKS
														105		475			
														106		474		30°,J,T,No,No,Pl,R @ 106.2', 106.3'	
							HQ	16	5.0	4.9	4.3	98	86	107		473		60°,J,VN,No,No,Pl,SR @ 107.5-107.8'	
														108		472		0°,B,VN,No,No,Pl,SR (weathered) @ 108.15'	
														109		471		109.1	
										109.5				110		470		DOLOMITE; brown; micritic; fresh; strong; hard; slightly brecciated, healed; (Bass Islands Group). 30°,J,VN,No,No,Pl,SR @ 109.3-109.4' 0°,B,VN,No,No,Pl,SR @ 109.9',110.7'	Core box #7 starts @ 109.5'.
														111		469		110.8 DOLOMITE; gray; micritic; fresh; strong; hard; (Bass Islands Group). 10°,J,VN,No,No,Pl,SR @ 111.3' shaley dolomite band; very dark gray; medium hard @ 111.4-111.6' 0°,B,VN,No,No,Pl,SR @ 111.5',111.7',111.9', 112.0', 112.1',112.3',112.4',112.7' brecciated @ 111.6-111.9' 90°,J,T,No,No,Pl,SR @ 112.0-113.0' (two orthogonal joints)	
							HQ	17	5.0	4.5	1.8	90	36	112		468			
														113		467			
														114		466		fractured @ 112.7-113.0' 112.7 DOLOMITE; light brownish gray; micritic; fresh; strong; hard; banded; (Bass Islands Group). 0°,B,VN,No,No,Pl,SR @ 112.9',113.0',113.5'	
										114.5				115		465		113.5 DOLOMITE; bluish gray; micritic; fresh; strong; hard; (Salina Group - Unit F). shaley dolomite band, very dark gray, moderately hard @ 113.7-113.9' 90°,J,VN,Ca,Fi,Pl,SR @ 114.0-114.5'	
														116		464		114.7 DOLOMITE; light brownish gray; micritic; fresh; strong; hard; banded; w/anhydrite veins & interbedding; (Salina Group - Unit F). 90°,J,VN,No,No,Pl,SR @ 115.0-115.6' 0°,B,VN,No,No,Pl,SR @ 115.0', 115.2', 116.3', 117.7', 118.1' anhydrite vein @ 115.6-115.8 anhydrite beds @ 116.1-116.6' shale parting - 0°,B,VN,Sp,Pl,SR @ 116.5' limestone @ 116.6-116.9 fractured dolomite @ 116.9-117.2' anhydrite vein @ 117.25' gray @ 117.7-118.0'	
							HQ	18	5.0	4.6	2.8	92	56	117		463			
														118		462			
														119		461			
										119.5				120		460			Run 14 core loss @ 119.5-121.6'.

BLACK & VEATCH

BORING LOG

BORING NO. RB-C11

CLIENT	PROJECT	PROJECT NO.
Detroit Edison	Fermi 3 COL Application	147483

PROJECT LOCATION	COORDINATES	GROUND ELEVATION (DATUM)	TOTAL DEPTH
Monroe, MI	N 6051.8' E 4534.6'	580.0 ft (NAVD 88)	135.5 (feet)

SURFACE CONDITIONS	COORDINATE SYSTEM	DATE START	DATE FINISHED
Gravel Parking Area	Plant	08/23/07	08/28/07

LOGGED BY	CHECKED BY	APPROVED BY
Grainger/Mass/Bonnie	Dogbey/Bonnie	Meyer

SAMPLING							CORING									
SAMPLE TYPE	SAMPLE NUMBER	SET 6 INCHES	2ND 6 INCHES	3RD 6 INCHES	N VALUE	SAMPLE RECOVERY	CORE SIZE	RUN NUMBER	RUN LENGTH	RUN RECOVERY	RQD RECOVERY	PERCENT RECOVERY	RQD	DEPTH (FEET)	SAMPLE TYPE	ELEVATION (FEET)	GRAPHIC LOG	CLASSIFICATION OF MATERIALS	REMARKS
														120		460		anhydrite vein @ 118.0-118.3' anhydrite vein @ 119.3'	
														121		459		dolomite & dolomitic shale bed; gray & brown; very fine grained; slightly weathered; strong; hard @ 121.6-122.0'	
														122		458		50°,J,Ca,Pa,Pl,SR @ 121.6'	
																		122.0	
							HQ	19	6.0	3.4	0.0	57	0	123		457		Silty SAND - About 70% fine sand; about 30% low plasticity, low toughness, slow to rapid dilatancy fines; greenish gray; soft; moist; no odor; strong reaction w/HCl; homogeneous; (Salina Group - Unit F).	
																		122.7	
														124		456		DOLOMITE; light brownish gray; micritic; fresh; strong; hard; banded; w/anhydrite veins & interbedding; (Salina Group - Unit F). 80°,J,Cl,Pa,Pl,SR @ 123.0-123.6' dolomite beds; gray; micritic; fresh; strong; hard @ 123.4-123.5',124.3-124.6'	
														125		455			
																		123.5	
										125.5				126		454		DOLOMITE; argillaceous; very dark gray; micritic; fresh; strong; hard; (Salina Group - Unit F). 0°,B,J,Ca,Pa,Pl,SR @ 124.5' limestone bed; pitted; argillaceous; very dark gray ; very fine grained; slightly weathered; strong; hard @ 124.6-125.0'	Core box #8 starts @ 125.5'.
														127		453			
																		125.0	
							HQ	20	5.0	2.9	0.0	58	0	128		452		DOLOMITE & CLAYSTONE; argillaceous; dark gray to gray; micritic; fresh to slightly weathered; strong to weak; hard to low hardness; (Salina Group - Unit F). limestone; argillaceous; gray; micritic; fresh; strong; hard @ 126.5-126.8' 0°,B,VN,No,No,Pl,SR @ 126.8', 127.7', 128.8' dolomite @ 126.8-127.1' claystone; highly weathered @ 127.1-127.5'	
														129		451			
																		127.5	
																		DOLOMITE; (Salina Group - Unit F) 70°,J,T,No,No,Pl,SR @ 127.6-127.8'	
														130		450		128.0	
																		CLAYSTONE; highly fractured; (Salina Group - Unit F)	
																		128.6	
										130.5				131		449		DOLOMITE & CLAYSTONE; argillaceous; dark gray to gray; micritic; fresh to slightly weathered; strong to weak; hard to low hardness; (Salina Group - Unit F). dolomite band @ 128.6-128.8' claystone band @ 128.8-129.0 dolomite @ 129.0-129.3' 60°,J,T,No,No,Pl,SR @ 130.8-130.9'	Sample 8A taken from HQ21 @ 131.0-131.9'.
														132		448			
																		131.0	
							HQ	21	5.0	4.2	2.2	84	44	133		447		CLAYSTONE; (Salina Group - Unit F) limestone band @ 131.9-132.0'	
																		132.0	
														134		446		DOLOMITE; argillaceous; gray; micritic; fresh; strong; hard; (Salina Group - Unit F). 60°,J,VN,No,No,Pl,SR @ 132.1-133.3' 0°,B,VN,No,No,Pl,SR @ 132.1', 132.7', 132.8', 133.0', 133.4' 134.4'	
														135		445		slightly weathered @ 132.3-132.6'	

BLACK & VEATCH

BORING LOG

BORING NO. RB-C11

CLIENT	PROJECT	PROJECT NO.
Detroit Edison	Fermi 3 COL Application	147483

PROJECT LOCATION	COORDINATES	GROUND ELEVATION (DATUM)	TOTAL DEPTH
Monroe, MI	N 6051.8' E 4534.6'	580.0 ft (NAVD 88)	135.5 (feet)

SURFACE CONDITIONS	COORDINATE SYSTEM	DATE START	DATE FINISHED
Gravel Parking Area	Plant	08/23/07	08/28/07

LOGGED BY	CHECKED BY	APPROVED BY
DCO for TB for Grainger/Mass/Bonnie TB	Dogbey/Bonnie TB	Meyer

SAMPLING							CORING									
SAMPLE TYPE	SAMPLE NUMBER	SET 6 INCHES	2ND 6 INCHES	3RD 6 INCHES	N VALUE	SAMPLE RECOVERY	CORE SIZE	RUN NUMBER	RUN LENGTH	RUN RECOVERY	RQD RECOVERY	PERCENT RECOVERY	RQD	DEPTH (FEET)	SAMPLE TYPE	ELEVATION (FEET)	GRAPHIC LOG	CLASSIFICATION OF MATERIALS	REMARKS
														135		445		limestone band @ 132.7-132.8' fractured @ 133.6-134.0' 90°,J,T,No,No,Pl,SR @ 133.6-134.0' 0°,J,VN,Cl,Pa,Pl,SR @ 133.6' 0°,J,VN,Cl,Sp,Pl,SR @ 133.7',133.8',133.85',133.9', 134.0'	Bottom of boring @ 135.5'. Water level not recorded @ completion of drilling. Backfilled w/ bentonite chips to 41.3' bgs on 09/07/07. Continued w/ bentonite chips to 5' bgs, then gravel to surface on 09/12/07.
														135.0				DOLOMITE; gray; (Salina Group - Unit F) 90°,J,T,No,No,Pl,SR @ 135.0-135.3'	
														136		444			
														137		443			
														138		442			
														139		441			
														140		440			
														141		439			
														142		438			
														143		437			
														144		436			
														145		435			
														146		434			
														147		433			
														148		432			
														149		431			
														150		430			

BLACK & VEATCH

BORING LOG

BORING NO. RB-C12

CLIENT	PROJECT	PROJECT NO.
Detroit Edison	Fermi 3 COL Application	147483

PROJECT LOCATION	COORDINATES	GROUND ELEVATION (DATUM)	TOTAL DEPTH
Monroe, MI	N 6043.5' E 4606.5'	581.1 ft (NAVD 88)	178.1 (feet)

SURFACE CONDITIONS	COORDINATE SYSTEM	DATE START	DATE FINISHED
Paved parking lot	Plant	08/24/07	08/28/07

LOGGED BY	CHECKED BY	APPROVED BY
Grainger/Mass	Dogbey/Mass	Meyer

SAMPLING: SAMPLE TYPE	SAMPLE NUMBER	SET 6 INCHES	2ND 6 INCHES	3RD 6 INCHES	N VALUE	SAMPLE RECOVERY	CORING: CORE SIZE	RUN NUMBER	RUN LENGTH	RUN RECOVERY	RQD RECOVERY	PERCENT RECOVERY	RQD	DEPTH (FEET)	SAMPLE TYPE	ELEVATION (FEET)	GRAPHIC LOG	CLASSIFICATION OF MATERIALS	REMARKS
														0		581		ASPHALT	Boring advanced w/vacuum excavation.
																		0.3	
																		COBBLES with Gravel - About 60% angular, cubical to flat & elongated, hard cobbles w/max. size 12"; about 20% fine to coarse, angular to elongated, hard gravel; about 15% fine to coarse, angular, hard sand; about 5% fines; (Fill).	
														1		580			
														2		579			
														3		578			
										4.0				4		577			Below 4.0' continued w/4" ID sonic continuous sampler w/ nominal 6" temporary steel casing advanced w/sampler.
														5		576			
														6		575			
S	1					2.0								7		574			
														8		573			Discrete sample SC-1 collected @ 7.8-8.2'.
														9		572			
										10.0				10		571			
														11		570			
														12		569			
S	2					3.0								13		568			
																		13.5	
														14		567		PEAT (PT) - About 100% plant tissue	
																		13.8	Discrete sample SC-2 collected @ 13.9-14.2.
														15				Fat CLAY - About 100% high plasticity, low toughness, no dilatancy, high dry strength fines; gray & yellowish brown, mottled; soft; moist; no reaction w/	

BLACK & VEATCH

BORING LOG

BORING NO. RB-C12

CLIENT	PROJECT	PROJECT NO.
Detroit Edison	Fermi 3 COL Application	147483

PROJECT LOCATION	COORDINATES	GROUND ELEVATION (DATUM)	TOTAL DEPTH
Monroe, MI	N 6043.5' E 4606.5'	581.1 ft (NAVD 88)	178.1 (feet)

SURFACE CONDITIONS	COORDINATE SYSTEM	DATE START	DATE FINISHED
Paved parking lot	Plant	08/24/07	08/28/07

LOGGED BY	CHECKED BY	APPROVED BY
Grainger/Mass	Dogbey/Mass	Meyer

SAMPLING								CORING										
SAMPLE TYPE	SAMPLE NUMBER	SET 6 INCHES	2ND 6 INCHES	3RD 6 INCHES	N VALUE	SAMPLE RECOVERY		CORE SIZE	RUN NUMBER	RUN LENGTH	RUN RECOVERY	RQD RECOVERY	PERCENT RECOVERY	RQD	DEPTH (FEET)	SAMPLE TYPE	ELEVATION (FEET)	GRAPHIC LOG
											15.5				15		566	
TW	3						2.0								16		565	
															17		564	
															18		563	
SPT	4	3	4	9	13		1.5								19		562	
															20		561	
TW	5						1.0								21		560	
															22		559	
															23		558	
SPT	6	11	21	50/5"	50+		1.2								24		557	
															25		556	
															26		555	
SPT	7	50/4"	-	-	50+		0.3								27		554	
											27.0				28		553	
S	8						3.0								29		552	
															30			

CLASSIFICATION OF MATERIALS

HCl; homogeneous; (Lacustrine Deposit).

15.5

Fat CLAY (CH) - About 95% high plasticity, high toughness, no dilatancy, high dry strength fines; about 5% fine to coarse, angular, hard sand; dark yellowish brown & gray, mottled; firm; moist; strong reaction w/HCl; (Lacustrine Deposit).

fissile; laminated; w/trace wood fragments @ 18.5-20.0'

20.5

Clayey SAND (SC) - About 80% fine sand; about 20% medium plasticity, medium toughness, slow dilatancy, medium dry strength fines; brown; medium dense; wet; strong reaction w/HCl; homogeneous; (Glacial Till).

23.5

Sandy Lean CLAY (CL) - About 60% medium plasticity, medium toughness, no dilatancy, high dry strength fines; about 40% fine to coarse, subangular to angular, hard sand; dark grayish brown; very hard; moist; strong reaction w/HCl; homogeneous; (Glacial Till).

26.6

Poorly graded SAND with Clay (SP-SC) - About 90% fine to coarse, angular, hard sand; about 10% medium plasticity, low toughness, slow dilatancy, medium dry strength fines; light olive brown; very dense; wet; strong reaction w/HCl; homogeneous; (Glacial Till).
highly fractured dolomite @ 26.8'

27.0

DOLOMITE; gray; micritic (crystalline); slightly weathered; very strong; hard; (Bass Islands Group).

REMARKS

Set nominal 6" temporary steel casing to 15.5'. Below 15.5' continued w/ NWJ rods & 4½" tricone bit using water as drilling fluid. SPT performed w/D-50 automatic hammer.
PP = 2.6 TSF @ 17.5'.
TV = 0.54 TSF @ 17.5'.

TW-5: tube bent.

PP = 3.2 TSF @ 23.0'.
TV = 0.32 TSF @ 23.0'.

Tricone refusal @ 27.0'. Below 27.0' continued w/4" ID sonic continuous sampler w/ nominal 6" temporary steel casing advanced

BLACK & VEATCH

BORING LOG

BORING NO. RB-C12

CLIENT	PROJECT	PROJECT NO.
Detroit Edison	Fermi 3 COL Application	147483

PROJECT LOCATION	COORDINATES	GROUND ELEVATION (DATUM)	TOTAL DEPTH
Monroe, MI	N 6043.5' E 4606.5'	581.1 ft (NAVD 88)	178.1 (feet)

SURFACE CONDITIONS	COORDINATE SYSTEM	DATE START	DATE FINISHED
Paved parking lot	Plant	08/24/07	08/28/07

LOGGED BY	CHECKED BY	APPROVED BY
Grainger/Mass	Dogbey/Mass	Meyer

SAMPLING: SAMPLE TYPE	SAMPLE NUMBER	SET 6 INCHES	2ND 6 INCHES	3RD 6 INCHES	N VALUE	SAMPLE RECOVERY

CORING: CORE SIZE	RUN NUMBER	RUN LENGTH	RUN RECOVERY	RQD RECOVERY	PERCENT RECOVERY	RQD
			30.5			
HQ	1	4.5	3.3	0.8	73	18
			35.0			
HQ	2	5.0	5.0	3.2	100	64
			40.0			
HQ	3	5.0	5.0	3.0	100	60

DEPTH (FEET)	SAMPLE TYPE	ELEVATION (FEET)	GRAPHIC LOG	CLASSIFICATION OF MATERIALS	REMARKS
30		551			w/sampler. Sonic core S-8 stored in box. Set nominal 6" temporary steel casing to 30.5'. Below 30.5' continued w/ triple tube wire line core barrel w/diamond bit using water as drilling fluid. Water level @ 16.5' prior to drilling on 08/26/07. Core box #1 starts @ 30.5'. Core loss @ 30.5-31.7'. Drill chatter @ 32.0', 32.2', 33.5', 34.0'.
31		550			
32		549		highly fractured @ 31.7-32.3'	
				32.3	
33		548		DOLOMITE; argillaceous; grayish brown; very fine grained (crystalline); fresh; strong; hard; w/shale partings; (Bass Islands Group). 20°,J,No,No,Pl,SR @ 32.4-32.5', 32.6-32.7' 90°,J,Ca,Pa,Pl,SR @ 32.7-33.0' 80°,J,No,No,Ir,R @ 32.9-33.3'	
34		547		highly fractured @ 34.0-34.7', 34.9-35.0'	
35		546		90°,J,No,No,Pl,SR @ 34.7-34.9'	
				35.0	
36		545		DOLOMITE; argillaceous; & SHALE; dolomitic; white & light gray, mottled; very fine grained (crystalline); fresh; very strong; hard; (Bass Islands Group). 0°,B,No,No,Pl,SR @ 35.2' 0°,B,No,No,St,SR @ 35.5'	
				35.8	
37		544		DOLOMITE; argillaceous; dark grayish brown; pitted; very fine grained (crystalline); fresh to slightly weathered; very strong; hard; w/widely spaced stylolites; pits 0.04-0.08" diameter; trace fossils (mollusks); (Bass Islands Group). highly fractured @ 35.8-35.9' shale parting - 0°,B,Pl,SR @ 36.4' 0°,B,UK,Fi,Pl,SR @ 36.7', 37.9', 38.1', 38.6', 38.7', 39.5' 60°,J,No,No,Pl,SR @ 36.7-36.9' 0°,B,No,No,Pl,SR @ 37.2'	
38		543			
39		542			
40		541		0.3" diameter vugs @ 40.5-40.7' 0°,B,UK,Fi,Pl,SR @ 40.5'	
41		540			
				41.2	
42		539		DOLOMITE; argillaceous; light gray & light olive gray, banded; very fine grained; fresh; very strong; hard; w/ stylolites & shale partings; (Bass Islands Group). highly fractured zone @ 41.2-41.5' shale parting - 10°,B,Pl,SR @ 41.9' 90°,J,Ca,Pa,Pl,SR @ 41.9-42.0'	Drill chatter @ 42.0'.
43		538		0°,B,UK,Fi,Pl,SR @ 43.2' highly fractured @ 43.5-43.7'	
44		537		0°,B,anhydrite,Fi,Pl,SR @ 44.0' 40°,J,anhydrite,Fi,Pl,SR @ 44.0-44.1' 0°,B,No,No,St,SR @ 44.3' 90°,J,No,No,Pl,SR @ 44.6-44.8' (2)	
45					

BLACK & VEATCH

BORING LOG

BORING NO. RB-C12

CLIENT	PROJECT	PROJECT NO.
Detroit Edison	Fermi 3 COL Application	147483

PROJECT LOCATION	COORDINATES	GROUND ELEVATION (DATUM)	TOTAL DEPTH
Monroe, MI	N 6043.5' E 4606.5'	581.1 ft (NAVD 88)	178.1 (feet)

SURFACE CONDITIONS	COORDINATE SYSTEM	DATE START	DATE FINISHED
Paved parking lot	Plant	08/24/07	08/28/07

LOGGED BY	CHECKED BY	APPROVED BY
CCG for TB for Grainger/Mass	Em for TB for Dogbey/Mass	Em Meyer

SAMPLING							CORING										
SAMPLE TYPE	SAMPLE NUMBER	SET 6 INCHES	2ND 6 INCHES	3RD 6 INCHES	N VALUE	SAMPLE RECOVERY	CORE SIZE	RUN NUMBER	RUN LENGTH	RUN RECOVERY	RQD RECOVERY	PERCENT RECOVERY	RQD	DEPTH (FEET)	SAMPLE TYPE	ELEVATION (FEET)	GRAPHIC LOG	CLASSIFICATION OF MATERIALS	REMARKS
										45.0				45		536			
																		44.9	
																		DOLOMITE; argillaceous; light brownish gray; very fine grained; fresh; very strong; very hard; (Bass Islands Group) . 30°,J,Ca,Pa,Pl,SR @ 45.3-45.5'	Core box #2 starts @ 45.0'.
														46		535			
																		45.6	
																		DOLOMITE; oolitic; light brownish gray; medium to coarse grained; fresh; very strong; hard; oolites 0.02-0.04"; (Bass Islands Group). shale partings - 0°,B,Pl,SR @ 45.6', 45.7' very closely spaced stylolites @ 45.6-45.9'	
														47		534			
HQ	4								5.0	5.0	2.9	100	58						
																		47.1	
														48		533		DOLOMITE; argillaceous; dark grayish brown; very fine grained; fresh; strong; hard; (Bass Islands Group). 0°,B,No,No,Pl,SR @ 47.5', 47.6', 47.8' 70°,J,T,Pl @ 47.6-47.8' highly fractured @ 47.8-48.0'	
														49		532			
																		47.9	
										50.0				50		531		DOLOMITE; oolitic; light brownish gray; medium to coarse grained; fresh; very strong; hard; oolites 0.02-0.04"; (Bass Islands Group). shale parting - 0°,B,St,SR @ 48.5' 70°,J,No,No,Pl,SR @ 49.1-49.7', 49.5-50.0'	
														51		530			
														52		529		argillaceous dolomite @ 51.9-52.0' 0°,B,No,No,Pl,SR @ 52.0'	
																		52.4	
HQ	5								5.0	4.7	3.0	94	60					DOLOMITE; light gray, light brownish gray, & dark grayish brown; laminated; micritic to very fine grained; fresh; strong; hard; w/shale partings and stylolites; (Bass Islands Group). 0°,B,No,No,Pl,SR @ 52.7', 53.5'	
														53		528			
														54		527		claystone parting; black; micritic; fresh; strong; hard @ 54.4'	
																		54.7	
										55.0				55		526		DOLOMITE; argillaceous; light brownish gray, grayish brown, & gray, banded; micritic to very fine grained; fresh to slightly weathered; strong; hard; w/shale partings; (Bass Islands Group). 80°,J,No,No,Pl,SR @ 54.7-54.9' 10°,J,No,No,Pl,SR @ 55.6' 90°,J,No,No,Pl,SR @ 55.8-56.3' 80°,J,No,No,Pl,SR @ 56.1-56.3' 30°,J,Cl,Fi,Pl,SR @ 56.5-56.6' highly fractured @ 57.0-57.1', 58.0-58.2' 90°,J,No,No,Pl,SR @ 57.1-57.5' (2)	No drilling fluid return @ 55.0'. Drill chatter @ 55.5'.
														56		525			
														57		524			
HQ	6								5.0	5.0	1.6	100	32						
														58		523		grades w/stylolites @ 58.1'	
														59		522		shale parting - 0°,B,Pl,SR @ 58.9'	
																		59.0	
														60				DOLOMITE; light brownish gray; pitted; very fine grained (crystalline); slightly weathered; strong; hard;	Core box #3 starts @ 59.2'.

BLACK & VEATCH

BORING LOG

BORING NO. RB-C12

CLIENT	PROJECT	PROJECT NO.
Detroit Edison	Fermi 3 COL Application	147483

PROJECT LOCATION	COORDINATES	GROUND ELEVATION (DATUM)	TOTAL DEPTH
Monroe, MI	N 6043.5' E 4606.5'	581.1 ft (NAVD 88)	178.1 (feet)

SURFACE CONDITIONS	COORDINATE SYSTEM	DATE START	DATE FINISHED
Paved parking lot	Plant	08/24/07	08/28/07

LOGGED BY	CHECKED BY	APPROVED BY
Grainger/Mass TB for	Dogbey/Mass TB for	Meyer

SAMPLING							CORING									
SAMPLE TYPE	SAMPLE NUMBER	SET 6 INCHES	2ND 6 INCHES	3RD 6 INCHES	N VALUE	SAMPLE RECOVERY	CORE SIZE	RUN NUMBER	RUN LENGTH	RUN RECOVERY	RQD RECOVERY	PERCENT RECOVERY	RQD	DEPTH (FEET)	SAMPLE TYPE	ELEVATION (FEET)	GRAPHIC LOG	CLASSIFICATION OF MATERIALS	REMARKS
										60.0				60		521		w/closely spaced stylolites; pits 0.04-0.12" diameter; (Bass Islands Group). 0°,B,No,No,PI,SR @ 59.2', 59.4' (2), 59.5', 59.7' 50°,J,Ca,Pa,PI,SR @ 59.5-59.6'	
														61		520		highly fractured @ 59.8-60.0' shale parting - 0°,B,PI,SR @ 60.1'	
														62		519		90°,J,No,No,PI,SR @ 60.3-60.6' shale partings @ 60.8-60.9' 90°,J,No,No,PI,SR @ 61.5-61.9'	
							HQ	7	5.0	4.7	2.2	94	44	63		518		0°,B,No,No,PI,SR @ 61.5, 61.6', 61.8', 62.0', 62.2', 62.3' highly fractured @ 62.2-62.3' 40°,J,Ca,Pa,PI,SR @ 62.8-63.0'	
														64		517		30°,J,No,No,PI,SR @ 63.4-63.5' 100°,J,Ca,Fi,PI,SR @ 63.4-63.6' 30°,J,Ca,Pa,PI,SR @ 63.7-63.8'	
										65.0				65		516			
														66		515		grades grayish brown @ 65.5' 0°,J,No,No,PI,R @ 66.0'	
														67		514		60°,J,T,Ca,Fi,PI @ 66.6-67.1' 60°,J,CI,Pa,PI,SR @ 66.9-67.3'	
							HQ	8	5.0	5.0	4.4	100	88	68		513		0°,B,UK,Fi,PI,SR @ 68.1'	
														69		512		shale partings & very closely spaced stylolites @ 68.8- 69.5' 90°,J,No,No,WA,SR @ 69.5-70.0', 69.6-70.3'	
										70.0				70		511		0°,B,UK,Fi,PI,SR @ 69.8'	Drill chatter @ 70.0'. Water level @ 20.6' prior to drilling on 08/27/07.
														71		510		90°,J,No,No,WA,SR @ 71.3-73.6' 0°,B,UK,Fi,PI,SR @ 71.4', 71.5'	
														72		509		71.8 DOLOMITE; light brownish gray; micritic; slightly weathered; strong; hard; w/widely spaced stylolites; (Bass Islands Group). 0°,B,UK,Fi,PI,SR @ 71.9'	Core box #4 starts @ 72.4'.
							HQ	9	5.0	5.0	2.1	100	42	73		508		90°,J,T,PI @ 72.7-72.9'	
														74		507		fat clay band - about 100% high plasticity, medium toughness, no dilatancy fines; firm; moist; hydrocarbon odor; no reaction w/HCl; homogeneous @ 73.8-73.9'	
														75					

BLACK & VEATCH

BORING LOG

BORING NO. RB-C12

CLIENT	PROJECT	PROJECT NO.
Detroit Edison	Fermi 3 COL Application	147483

PROJECT LOCATION	COORDINATES	GROUND ELEVATION (DATUM)	TOTAL DEPTH
Monroe, MI	N 6043.5' E 4606.5'	581.1 ft (NAVD 88)	178.1 (feet)

SURFACE CONDITIONS	COORDINATE SYSTEM	DATE START	DATE FINISHED
Paved parking lot	Plant	08/24/07	08/28/07

LOGGED BY	CHECKED BY	APPROVED BY
Grainger/Mass	Dogbey/Mass	Meyer

SAMPLING							CORING									
SAMPLE TYPE	SAMPLE NUMBER	SET 6 INCHES	2ND 6 INCHES	3RD 6 INCHES	N VALUE	SAMPLE RECOVERY	CORE SIZE	RUN NUMBER	RUN LENGTH	RUN RECOVERY	RQD RECOVERY	PERCENT RECOVERY	RQD	DEPTH (FEET)	SAMPLE TYPE	ELEVATION (FEET)	GRAPHIC LOG	CLASSIFICATION OF MATERIALS	REMARKS
										75.0				75		506		highly fractured @ 73.9-74.7'	
																		73.9 / DOLOMITE; argillaceous; light brownish gray; micritic; fresh; very strong; hard; (Bass Islands Group).	
														76		505		brecciated (healed) @ 75.0'-75.4'	
																		75.4 / SHALE; very dark gray; very fine grained; moderately weathered to completely weathered; moderately strong to very weak; moderately hard to friable; properties comparable to low plasticity, low toughness, slow to rapid dilatancy soil fines; moist; slight hydrocarbon odor; no reaction w/HCl; homogeneous; (Bass Islands Group).	
														77		504			
HQ	10	5.0	5.0	1.6	100	32								78		503			
																		76.2 / DOLOMITE; argillaceous; grayish brown; very fine grained (crystalline); fresh to slightly weathered; strong; hard; w/stylolites; (Bass Islands Group).	
														79		502		pitted @ 77.5-78.3'	
																		highly fractured @ 78.3-78.6'	
														80		501		w/very closely spaced stylolites @ 79.0-79.2'	
										80.0								90°,J,Ca,Pa,Pl,SR @ 79.3-80.0', 79.5-80.0'	
														81		500		brecciated (healed) w/shale partings @ 79.4-79.5'	
																		highly fractured @ 80.2-80.3', 82.2-82.3', 82.5-82.6'	
														82		499		0°,B,No,No,Pl,SR @ 81.3'	
																		30°,J,UK,Pa,Pl,S @ 81.3-81.4'	
HQ	11	5.0	4.9	3.3	98	66								83		498		grayish brown & light brownish gray, banded @ 81.6-82.1'	
																		90°,J,Ca,Fi,Pl,SR @ 81.9-82.7'	
														84		497		90°,J,Ca,Pa,WA,SR @ 81.9-82.1'	
																		shale parting @ 81.9'	
																		90°,J,T,Ca,Fi,Pl @ 82.6-83.9'	
														85		496		20°,J,Cl/Ca,Fi,Pl,SR @ 84.7-84.8'	
										85.0								84.9 / DOLOMITE; light olive gray & gray, banded; micritic; fresh; very strong; hard; w/thin shale partings; trace stylolites; (Bass Islands Group).	
														86		495		shale partings - 0°,B,Pl,SR @ 85.0', 85.1', 85.3', 86.2'	
																		10°,J,Cl,Pa,Pl,SR @ 86.4'	Core box #5 starts @ 86.4'.
														87		494		brecciated (healed) w/lenses & convoluted bands of shale @ 86.5-86.8'	
HQ	12	5.0	5.0	2.6	100	52												86.8 / DOLOMITE; light brownish gray, light gray, & gray, banded; laminated; very fine grained (crystalline); fresh; very strong; hard; w/trace stylolites; (Bass Islands Group).	
														88		493		shale parting - 0°,B,Pl,SR @ 88.3'	
														89		492		0°,B,UK,Fi,Pl,SR @ 88.9', 89.1'	
																		80°,J,No,No,Pl,SR @ 89.3-90.0'	
														90					

BLACK & VEATCH

BORING LOG

BORING NO. RB-C12

CLIENT	PROJECT	PROJECT NO.
Detroit Edison	Fermi 3 COL Application	147483

PROJECT LOCATION	COORDINATES	GROUND ELEVATION (DATUM)	TOTAL DEPTH
Monroe, MI	N 6043.5' E 4606.5'	581.1 ft (NAVD 88)	178.1 (feet)

SURFACE CONDITIONS	COORDINATE SYSTEM	DATE START	DATE FINISHED
Paved parking lot	Plant	08/24/07	08/28/07

LOGGED BY	CHECKED BY	APPROVED BY
Grainger/Mass TB for	Dogbey/Mass TB for	Meyer

SAMPLING							CORING										
SAMPLE TYPE	SAMPLE NUMBER	SET 6 INCHES	2ND 6 INCHES	3RD 6 INCHES	N VALUE	SAMPLE RECOVERY	CORE SIZE	RUN NUMBER	RUN LENGTH	RUN RECOVERY	RQD RECOVERY	PERCENT RECOVERY	RQD	DEPTH (FEET)	SAMPLE TYPE	ELEVATION (FEET)	GRAPHIC LOG	CLASSIFICATION OF MATERIALS	REMARKS
										90.0				90		491		highly fractured @ 90.5-91.1'	
																		90.7	
														91		490		DOLOMITE; argillaceous; dark gray; micritic; fresh; very strong; hard; w/shale partings; trace stylolites; (Bass Islands Group).	
														92		489		80°,J,Ca,Pa,Pl,SR @ 90.9-91.3'	
							HQ	13	5.0	5.0	2.9	100	58					shale partings - 0°,B,Pl,SR @ 91.5' (2), 91.6', 92.3', 92.5', 93.5'	
														93		488		many wavy shale partings @ 91.6-91.9'	
																		claystone band; black; fresh; strong; hard @ 92.2-92.3'	
														94		487		30°,J,No,No,Pl,SR @ 92.5-92.6'	
																		80°,J,No,No,Pl,SR @ 94.5-94.8'	
														95		486		94.9	
										95.0								DOLOMITE; argillaceous; gray; very fine grained (crystalline); fresh; strong, hard; w/widely spaced stylolites; (Bass Islands Group).	
														96		485		50°,J,No,No,Pl,SR @ 95.0-95.3'	
																		90°,J,No,No,Pl,SR @ 95.1-95.4', 95.5-95.8'	
														97		484		silt band - about 100% low plasticity, low toughness, rapid dilatancy fines; light gray; soft; moist; no hydrocarbon odor; strong reaction w/HCl;	
							HQ	14	5.0	5.0	2.8	100	56					homogeneous @ 95.8-96.0'	
														98		483		60°,J,No,No,Pl,SR @ 96.3-96.9'	
																		0°,J,UK,Fi,Pl,SR @ 97.0', 97.6', 97.7'	
														99		482		very closely spaced stylolites @ 97.6-97.7'	
																		brecciated (healed) @ 98.4-98.5', 99.0-99.1'	
																		40°,J,No,No,Pl,S @ 98.4-98.5'	
														100		481		70°,J,Ca/Cl,Pa,Pl,SR @ 99.7-100.3'	
										100.0								shale partings - 0°,B,WA,SR @ 99.9'	Core box #6 starts @ 100.0'.
														101		480		60°,J,Ca,Pa,Pl,SR @ 100.5'	
																		90°,J,No,No,Pl,SR @ 100.5-100.7'	
																		100.7	
														102		479		DOLOMITE; light brownish gray & grayish brown, mottled; pitted; very fine grained (crystalline); fresh; very strong; hard; (Bass Islands Group).	
							HQ	15	5.0	5.0	4.3	100	86					30°,J,W,Cl,Fi,Pl,SR @ 100.7-100.8'	
														103		478		very closely spaced stylolites @ 101.4-102.4'	
																		30°,J,UK, Fi,Pl,SR @ 102.2-102.3', 102.5-102.6'	
														104		477		0°,J,UK,Fi,Pl,SR @ 102.7'	
																		0°,J,No,No,Pl,SR @ 103.7'	
														105				grades brecciated (healed) w/convoluted shale partings @ 103.7'	

BLACK & VEATCH

BORING LOG

BORING NO. RB-C12

CLIENT	PROJECT	PROJECT NO.
Detroit Edison	Fermi 3 COL Application	147483

PROJECT LOCATION	COORDINATES	GROUND ELEVATION (DATUM)	TOTAL DEPTH
Monroe, MI	N 6043.5' E 4606.5'	581.1 ft (NAVD 88)	178.1 (feet)

SURFACE CONDITIONS	COORDINATE SYSTEM	DATE START	DATE FINISHED
Paved parking lot	Plant	08/24/07	08/28/07

LOGGED BY	CHECKED BY	APPROVED BY
Grainger/Mass	Dogbey/Mass	Meyer

SAMPLING: SAMPLE TYPE	SAMPLE NUMBER	SET 6 INCHES	2ND 6 INCHES	3RD 6 INCHES	N VALUE	SAMPLE RECOVERY

CORING: CORE SIZE	RUN NUMBER	RUN LENGTH	RUN RECOVERY	RQD RECOVERY	PERCENT RECOVERY	RQD
HQ	16	5.0	4.7	1.2	94	24
HQ	17	5.0	3.7	1.8	74	36
HQ	18	5.0	4.1	0.9	82	18

DEPTH (FEET)	SAMPLE TYPE	ELEVATION (FEET)	GRAPHIC LOG	CLASSIFICATION OF MATERIALS	REMARKS
105		476		105.0 40°,J,No,No,Pl,SR @ 105.2-105.3'	
				105.7 DOLOMITE; argillaceous; dark grayish brown; very fine grained (crystalline); fresh; very strong; very hard; (Bass Islands Group).	
106		475		106.5 DOLOMITE & DOLOMITE; argillaceous; brecciated (healed); dark olive gray & dark grayish brown, mottled; very fine grained (crystalline); fresh to slightly weathered; very strong; hard; (Bass Islands Group).	
107		474		70°,J,No,No,Pl,SR @ 106.6-106.9' 110°,J,No,No,Pl,SR @ 106.6-107.0' 90°,J,anhydrite,Pa,WA,SR @ 107.0-108.5'	
108		473		highly fractured w/clay; about 100% medium plasticity, medium toughness, slow dilatancy fines; gray; soft; moist; strong reaction w/HCl; homogeneous @ 108.7-109.0'	
109		472		90°,J,Ca,Pa,Pl,SR @ 108.9-109.2'	
110		471		109.0 DOLOMITE; argillaceous; greenish gray; micritic; fresh; very strong; hard; (Bass Islands Group).	
111		470		highly fractured w/clay; about 100% medium plasticity, medium toughness, slow dilatancy fines; gray; soft; moist; strong reaction w/HCl; homogeneous @ 109.2-109.5', 109.7-110.0'	
112		469		90°,J,Ca,Pa,Pl,SR @ 109.6-109.8' grades dark greenish gray @ 110.3' highly fractured @ 110.5-110.6' 0°,B,Cl,Pa,Pl,SR @ 110.8'	
113		468		110.9 DOLOMITE; argillaceous; & SHALE; dolomitic; light gray, brown, & dark gray, banded; laminated; fissile; micritic to very fine grained; slightly to moderately weathered; strong; moderately hard to hard; (Salina Group - Unit F).	Core loss @ 113.9-115.9'.
114		467		highly fractured @ 110.9-111.1' shale partings - 0°,B,Pl,SR @ 111.7', 111.8', 112.4', 112.5', 113.0'	
115		466		75°,J,T,Pl @ 111.9-112.2' highly fractured @ 113.3-114.0' 60°,J,Cl,Fi,Pl,SR @ 113.5-113.7' (3) highly fractured w/clay @ 115.9-116.5'	Core box #7 starts @ 115.0'.
116		465		70°,J,N,Pl @ 116.5-116.7'	
117		464		highly fractured @ 117.5-117.9', 118.6-119.1'	
118		463		0°,B,anhydrite,Fi,Pl,SR @ 118.1' 80°,J,No,No,Pl,SR @ 118.1-118.3'	
119		462		118.6 LIMESTONE; argillaceous; dark gray; pitted/vuggy; very fine to fine grained (crystalline); slightly weathered; very strong; hard; pits round; vugs elongate & 0.4-2.0"; (Salina Group - Unit F).	
120					

BLACK & VEATCH

BORING LOG

BORING NO. RB-C12

CLIENT	PROJECT	PROJECT NO.
Detroit Edison	Fermi 3 COL Application	147483

PROJECT LOCATION	COORDINATES	GROUND ELEVATION (DATUM)	TOTAL DEPTH
Monroe, MI	N 6043.5' E 4606.5'	581.1 ft (NAVD 88)	178.1 (feet)

SURFACE CONDITIONS	COORDINATE SYSTEM	DATE START	DATE FINISHED
Paved parking lot	Plant	08/24/07	08/28/07

LOGGED BY	CHECKED BY	APPROVED BY
Grainger/Mass	Dogbey/Mass	Meyer

SAMPLING							CORING										
SAMPLE TYPE	SAMPLE NUMBER	SET 6 INCHES	2ND 6 INCHES	3RD 6 INCHES	N VALUE	SAMPLE RECOVERY	CORE SIZE	RUN NUMBER	RUN LENGTH	RUN RECOVERY	RQD RECOVERY	PERCENT RECOVERY	RQD	DEPTH (FEET)	SAMPLE TYPE	ELEVATION (FEET)	GRAPHIC LOG	CLASSIFICATION OF MATERIALS	REMARKS
										120.0				120		461		90°,J,Ca,Fi,Pl,R @ 119.0-121.0'	
																		20°,J,Ca,Fi,Pl,SR @ 119.6'	
																		120.3	
														121		460		DOLOMITE; argillaceous; gray; micritic; slightly weathered; strong; hard; hydrocarbon odor; (Salina Group - Unit F).	
																		highly fractured @ 120.3-120.5'	
																		121.4	
							HQ	19	5.0	4.9	0.9	98	18	122		459		CLAYSTONE; dolomitic; & LIMESTONE; interbedded; greenish gray to gray; micritic to very fine grained; slightly to moderately weathered; moderately strong to strong; moderately hard to hard; thin to thick bedded; (Salina Group - Unit F).	
														123		458		highly fractured @ 122.6-123.0'	
																		70°,J,Cl,Fi,Pl,SR @ 122.6-123.0'	
														124		457		0°,B,Cl,Fi,Pl,SR @ 124.0', 125.3'	
										125.0				125		456			Core loss @ 124.9-125.0'.
																		125.8	
														126		455		DOLOMITE; argillaceous, dark gray; very fine grained; slightly to moderately weathered; moderately strong to strong; moderately hard to hard; w/ limestone partings & bands; (Salina Group - Unit F).	
														127		454		40°,J,No,No,Pl,SR @ 126.2-126.4'	
							HQ	20	5.0	4.9	0.4	98	8					0°,B,Cl,Fi,Pl,SR @ 127.0', 127.8', 127.9', 128.3'	
														128		453		highly fractured @ 128.0-129.0'	
																		90°,J,Cl,Fi,Pl,SR @ 128.1-128.5', 128.7-128.9'	
														129		452		129.0	
																		DOLOMITE; argillaceous; & SHALE; dolomitic; gray; micritic to very fine grained; slightly to moderately weathered; moderately strong to strong; moderately hard; (Salina Group - Unit F).	
										130.0				130		451		20°,J,No,No,Pl,SR @ 129.2-129.3'	Core box #8 starts @ 130.0'.
														131		450			
														132		449			
							HQ	21	5.0	2.8	0.9	56	18					highly fractured @ 132.6-133.1'	
														133		448		lean clay band - about 100% medium plasticity, medium toughness, slow dilatancy fines; gray; soft; moist; slight hydrocarbon odor; strong reaction w/HCl;	
																		homogeneous @ 132.7-132.9'	
														134		447		limestone bands; dark greenish gray; pitted; micritic; slightly weathered; strong; hard @ 132.9-133.2', 133.4-133.6'	
														135				70°,J,Ca,Fi,Pl,SR @ 133.1-133.3'	

BLACK & VEATCH

BORING LOG

BORING NO. RB-C12

SHEET 10 OF 13

CLIENT	PROJECT	PROJECT NO.
Detroit Edison	Fermi 3 COL Application	147483

PROJECT LOCATION	COORDINATES	GROUND ELEVATION (DATUM)	TOTAL DEPTH
Monroe, MI	N 6043.5' E 4606.5'	581.1 ft (NAVD 88)	178.1 (feet)

SURFACE CONDITIONS	COORDINATE SYSTEM	DATE START	DATE FINISHED
Paved parking lot	Plant	08/24/07	08/28/07

LOGGED BY	CHECKED BY	APPROVED BY
Grainger/Mass	Dogbey/Mass	Meyer

SAMPLING: SAMPLE TYPE	SAMPLE NUMBER	SET 6 INCHES	2ND 6 INCHES	3RD 6 INCHES	N VALUE	SAMPLE RECOVERY

CORING: CORE SIZE	RUN NUMBER	RUN LENGTH	RUN RECOVERY	RQD RECOVERY	PERCENT RECOVERY	RQD
HQ	22	5.0	3.3	0.4	66	8
HQ	23	5.0	4.0	1.0	80	20
HQ	24	5.0	4.9	0.5	98	10

DEPTH (FEET)	ELEVATION (FEET)	CLASSIFICATION OF MATERIALS	REMARKS
135.0	446	dolomite bands; light brownish gray; micritic; fresh; strong; hard; w/fossils (ostracodes) @ 133.2-133.4', 133.6-133.8'	
136	445	grades gray & greenish gray, banded; fresh; strong; hard @ 133.8'	
		134.1	
137	444	DOLOMITE; argillaceous; grayish brown; micritic; fresh; strong; hard; (Salina Group - Unit F). 90°,J,Ca,Fi,Pl,SR @ 134.1-134.5' grades bluish gray @ 134.6' 30°,J,No,No,Pl,SR @ 134.6-134.8', 134.8-135.0' highly fractured @ 134.7-135.0'	
138	443	135.5	
139	442	CLAYSTONE; dolomitic; greenish gray; moderately to highly weathered; weak to extremely weak; low hardness to friable; properties comparable to high plasticity, low toughness, no dilatancy to rapid dilatancy; moist soil fines; w/moderately wide spaced; argillaceous; bluish gray; micritic; fresh; strong; hard; dolomite beds; (Salina Group - Unit F). highly fractured @ 136.3-136.6', 137.5-137.9' 0°,B,Cl,Fi,Pl,SR @ 138.4'	
140.0	441		Core loss @ 140.0-141.0'.
141	440		
142	439		
143	438	90°,J,Cl,Pa,Pl,SR @ 143.0-143.2'	
		143.8	
144	437	DOLOMITE; argillaceous; & SHALE; dolomitic; greenish gray & gray; laminated; micritic to very fine grained; moderately weathered; moderately strong; moderately hard; (Salina Group - Unit F).	Discrete sample 8-A collected @ 144.0-144.8'.
145.0	436	silty sand band - about 80% fine sand; about 20% low plasticity, low toughness, rapid dilatancy fines; greenish gray; soft; wet; strong reaction w/HCl; no hydrocarbon odor; homogeneous @ 145.1-145.3'	Core loss @ 145.0-145.1'.
		145.3	
146	435	CLAYSTONE; dolomitic; greenish gray; pitted; slightly to moderately weathered; moderately strong; moderately hard; w/close to moderately wide spaced; argillaceous; greenish gray; pitted; micritic; fresh; strong; hard; dolomite bands & thin beds; (Salina Group - Unit F).	
147	434		
148	433	silty sand bands - about 80% fine sand; about 20% low plasticity, low toughness, rapid dilatancy fines; greenish gray; soft; wet; strong reaction w/HCl; no hydrocarbon odor; homogeneous @ 145.5-145.6', 147.3-147.4'	
149	432	40°,J,No,No,Pl,SR @ 146.9-147.0' 120°,J,Cl,Fi,Pl,SR @ 146.9-147.4'	
150			

4/28/2008 12:50 PM DTE - Fermi 3 Geotech

BLACK & VEATCH

BORING LOG

BORING NO. RB-C12

CLIENT	PROJECT	PROJECT NO.
Detroit Edison	Fermi 3 COL Application	147483

PROJECT LOCATION	COORDINATES	GROUND ELEVATION (DATUM)	TOTAL DEPTH
Monroe, MI	N 6043.5' E 4606.5'	581.1 ft (NAVD 88)	178.1 (feet)

SURFACE CONDITIONS	COORDINATE SYSTEM	DATE START	DATE FINISHED
Paved parking lot	Plant	08/24/07	08/28/07

LOGGED BY	CHECKED BY	APPROVED BY
Grainger/Mass TB for	Dogbey/Mass TB for	Meyer

SAMPLING: SAMPLE TYPE, SAMPLE NUMBER, SET 6 INCHES, 2ND 6 INCHES, 3RD 6 INCHES, N VALUE, SAMPLE RECOVERY

CORING: CORE SIZE, RUN NUMBER, RUN LENGTH, RUN RECOVERY, RQD RECOVERY, PERCENT RECOVERY, RQD

SAMPLE TYPE	SAMPLE NUMBER	SET 6 INCHES	2ND 6 INCHES	3RD 6 INCHES	N VALUE	SAMPLE RECOVERY	DEPTH (FEET)	ELEVATION (FEET)	CLASSIFICATION OF MATERIALS	REMARKS
			150.0				150	431	gray; highly weathered; weak; low hardness @ 147.4-147.6' highly fractured @ 147.7-148.4, 149.4-149.7' 60°,J,Cl,Fi,Pl,SR @ 149.0-149.2'	Core box #9 starts @ 150.0'.
							151	430	highly weathered; weak to extremely weak; low hardness to friable @ 151.4-151.6' 0°,J,Cl,Fi,Pl,SR @ 151.6'	
							152	429		
HQ	25	5.0	4.7	1.4	94	28	153	428		Discrete sample 9-A collected @ 152.4-153.2'.
							154	427	highly fractured @ 153.9-154.3' 60°,J,Cl,Fi,Pl,SR @ 153.9-154.3'	
									154.5	
			155.0				155	426	SHALE; dolomitic; dark gray; laminated; very fine grained; moderately weathered; moderately strong; moderately hard; (Salina Group - Unit F).	Core loss throughout @ 155.0-175.0'.
							156	425	highly fractured @ 155.7-156.3'	
									156.8	
							157	424	DOLOMITE; argillaceous; dark gray; micritic; slightly weathered; strong; hard; (Salina Group - Unit F). claystone bed; dolomitic @ 157.2-157.5'	
HQ	26	5.0	3.6	0.0	72	0	158	423	0°,B,Cl,Pa,Pl,SR @ 157.9', 158.0', 158.1', 158.3', 158.7', 158.8' 80°,J,Cl,Pa,Pl,SR @ 158.3-158.6' (2)	
							159	422		
			160.0				160	421		
							161	420		
							162	419	highly fractured @ 162.0-162.5'	
HQ	27	5.0	1.0	0.0	20	0	163	418	greenish gray & dark greenish gray, banded @ 162.5-163.0'	Soft drilling @ 163.0-165.0'.
							164	417		
							165			

BLACK & VEATCH

BORING LOG

BORING NO. RB-C12

CLIENT	PROJECT	PROJECT NO.
Detroit Edison	Fermi 3 COL Application	147483

PROJECT LOCATION	COORDINATES	GROUND ELEVATION (DATUM)	TOTAL DEPTH
Monroe, MI	N 6043.5' E 4606.5'	581.1 ft (NAVD 88)	178.1 (feet)

SURFACE CONDITIONS	COORDINATE SYSTEM	DATE START	DATE FINISHED
Paved parking lot	Plant	08/24/07	08/28/07

LOGGED BY	CHECKED BY	APPROVED BY
Grainger/Mass TB for	Dogbey/Mass TB for	Meyer

SAMPLING							CORING									
SAMPLE TYPE	SAMPLE NUMBER	SET 6 INCHES	2ND 6 INCHES	3RD 6 INCHES	N VALUE	SAMPLE RECOVERY	CORE SIZE	RUN NUMBER	RUN LENGTH	RUN RECOVERY	RQD RECOVERY	PERCENT RECOVERY	RQD	DEPTH (FEET)	SAMPLE TYPE	ELEVATION (FEET)	GRAPHIC LOG	CLASSIFICATION OF MATERIALS	REMARKS
														165		416			
										165.0				166		415			
														167		414			
							HQ	28	5.0	2.2	0.8	44	16	168		413		highly fractured @ 167.8-168.3'	
																		168.3	
														169		412		BRECCIA - dolomite clasts in a poorly indurated claystone matrix: claystone matrix; dolomitic; dark greenish gray; moderately to highly weathered; moderately strong to weak; moderately hard; w/ angular sand- & gravel-sized clasts of dolomite; argillaceous; micritic; slightly to moderately weathered; strong; hard; (Salina Group - Unit F). 60°,J,Cl,Fi,Pl,SR @ 169.0-169.3' 0°,B,Cl,Fi,Pl,SR @ 169.5' highly fractured @ 169.7-170.0'	
										170.0				170		411			Core loss throughout @ 170.0-175.0'.
							HQ	29	2.5	1.0	0.0	40	0	171		410		dolomite fragments; argillaceous; greenish gray; micritic to very fine grained (crystalline); slightly weathered; very strong; hard; highly fractured; angular to subangular, gravel-sized fragments @ 170.7-171.7'	
														172		409			
										172.5				173		408			
							HQ	30	2.5	1.3	0.0	52	0	174		407		173.4 DOLOMITE; argillaceous; gray; micritic; fresh; strong; hard; (Salina Group - Unit F). 90°,J,Cl,Pa,Pl,SR @ 173.7-173.8' 60°,J,Cl,Pa,Pl,SR @ 173.8-173.9' 40°,J,Cl,Pa,Pl,SR @ 174.2-174.3'	
										175.0				175		406		174.3 BRECCIA - dolomite clasts in a poorly indurated claystone matrix: claystone matrix; dolomitic; dark greenish gray; moderately to highly weathered; moderately strong to weak; moderately hard; w/ angular sand- & gravel-sized clasts of dolomite; argillaceous; micritic; slightly to moderately weathered; strong; hard; (Salina Group - Unit F). grades greenish gray; completely weathered; very weak; friable; properties comparable to high plasticity, low toughness, rapid dilatancy soil fines @ 175.0'	Core box #10 starts @ 175.0'.
							HQ	31	2.5	2.5	1.3	100	52	176		405			Discrete sample 10-A collected @ 176.0-177.0'.
														177		404			
										177.5				178		403		grades highly weathered; weak; low hardness to friable; properties comparable to high plasticity, low toughness, slow dilatancy soil fines @ 175.5'	Bottom of boring @ 178.1'. Water level @ 20.4' @ completion of drilling. The extra 0.6' may be due to material wash
														179		402		175.9 BRECCIA - dolomite clasts in a indurated claystone matrix: claystone matrix; greenish gray; slightly to moderately weathered; moderately strong; moderately hard; w/angular clasts of dolomite; some argillaceous;	
														180					

BLACK & VEATCH

BORING LOG

BORING NO. RB-C12

CLIENT	PROJECT	PROJECT NO.
Detroit Edison	Fermi 3 COL Application	147483

PROJECT LOCATION	COORDINATES	GROUND ELEVATION (DATUM)	TOTAL DEPTH
Monroe, MI	N 6043.5' E 4606.5'	581.1 ft (NAVD 88)	178.1 (feet)

SURFACE CONDITIONS	COORDINATE SYSTEM	DATE START	DATE FINISHED
Paved parking lot	Plant	08/24/07	08/28/07

LOGGED BY	CHECKED BY	APPROVED BY
Grainger/Mass TB for	Dogbey/Mass TB for	Meyer EM

SAMPLING							CORING										
SAMPLE TYPE	SAMPLE NUMBER	SET 6 INCHES	2ND 6 INCHES	3RD 6 INCHES	N VALUE	SAMPLE RECOVERY	CORE SIZE	RUN NUMBER	RUN LENGTH	RUN RECOVERY	RQD RECOVERY	PERCENT RECOVERY	RQD	DEPTH (FEET)	SAMPLE TYPE	ELEVATION (FEET)	GRAPHIC LOG	CLASSIFICATION OF MATERIALS	REMARKS
														180		401		very dark gray or light brownish gray; micritic; slightly to moderately weathered; moderately strong; moderately hard to hard; (Salina Group - Unit F). dolomite band; gray; micritic; fresh to slightly weathered; strong; hard; w/clay partings angled 30° @ 177.0-177.2'	out. Backfilled w/ bentonite chips to 41' on 09/06/07. Backfilled w/ bentonite chips to ground surface on 09/13/07.
														181		400			
														182		399			
														183		398			
														184		397			
														185		396			
														186		395			
														187		394			
														188		393			
														189		392			
														190		391			
														191		390			
														192		389			
														193		388			
														194		387			
														195					

BLACK & VEATCH

BORING LOG

BORING NO. RW-C1

SHEET 1 OF 19

CLIENT	PROJECT	PROJECT NO.
Detroit Edison	Fermi 3 COL Application	147483

PROJECT LOCATION	COORDINATES	GROUND ELEVATION (DATUM)	TOTAL DEPTH
Monroe, MI	N 6384.1' E 4177.5'	580.7 ft (NAVD 88)	271.2 (feet)

SURFACE CONDITIONS	COORDINATE SYSTEM	DATE START	DATE FINISHED
Gravel parking lot	Plant	06/13/07	06/20/07

LOGGED BY	CHECKED BY	APPROVED BY
Grainger/Bonnie TB	Dogbey/Bonnie TB	Meyer SM

SAMPLING							CORING									
SAMPLE TYPE	SAMPLE NUMBER	SET 6 INCHES	2ND 6 INCHES	3RD 6 INCHES	N VALUE	SAMPLE RECOVERY	CORE SIZE	RUN NUMBER	RUN LENGTH	RUN RECOVERY	RQD RECOVERY	PERCENT RECOVERY	RQD	DEPTH (FEET)	SAMPLE TYPE	ELEVATION (FEET)	GRAPHIC LOG	CLASSIFICATION OF MATERIALS	REMARKS
														0		580		Well graded GRAVEL with Silt (GW-GM) - About 80% angular to subangular, hard gravel w/max. size 1½"; about 10% fine to coarse, angular to subangular sand; about 10% fines; dark reddish gray; dry; weak reaction w/HCl; (Fill).	Boring advanced w/vacuum excavation.
														1		579			
														2		578			
														3		577			
														4		576		4.0 — Poorly graded GRAVEL (GP) - About 90% angular, hard gravel w/max. size 3"; about 5% fine to coarse sand; about 5% fines; dark reddish gray; moist; weak reaction w/HCl; (Fill).	Below 5.0' continued w/4¼" ID; 8" OD hollow stem augers. SPT performed w/D-50 automatic hammer.
														5		575			
														6		574			
														7		573			
														8		572			
														9		571			
SPT	1	23	22	30	52	1.0								10		570			Sample shoe split in half
														11		569			
														12		568		12.5 — Lean CLAY (CL) - About 100% LL=40,PL=18, no dilatancy, high dry strength fines; reddish brown & gray, mottled; firm; moist; no reaction w/HCl; homogeneous; (Lacustrine Deposit).	
SPT	2	2	3	3	6	2								13		567			
														14		566		14.5 — Lean CLAY with Sand (CL) - About 76% LL=27,PL=	PP > 4.5 TSF @ 16.5'.
														15					

BLACK & VEATCH

BORING LOG

BORING NO. RW-C1

SHEET 2 OF 19

CLIENT	PROJECT	PROJECT NO.
Detroit Edison	Fermi 3 COL Application	147483

PROJECT LOCATION	COORDINATES	GROUND ELEVATION (DATUM)	TOTAL DEPTH
Monroe, MI	N 6384.1' E 4177.5'	580.7 ft (NAVD 88)	271.2 (feet)

SURFACE CONDITIONS	COORDINATE SYSTEM	DATE START	DATE FINISHED
Gravel parking lot	Plant	06/13/07	06/20/07

LOGGED BY	CHECKED BY	APPROVED BY
Grainger/Bonnie TB	Dogbey/Bonnie TB	Meyer

SAMPLING							CORING									
SAMPLE TYPE	SAMPLE NUMBER	SET 6 INCHES	2ND 6 INCHES	3RD 6 INCHES	N VALUE	SAMPLE RECOVERY	CORE SIZE	RUN NUMBER	RUN LENGTH	RUN RECOVERY	RQD RECOVERY	PERCENT RECOVERY	RQD	DEPTH (FEET)	ELEVATION (FEET)	CLASSIFICATION OF MATERIALS	REMARKS
TW	3					1.5								15	565	18, slow dilatancy, high dry strength fines; about 20% fine to coarse, rounded, hard sand; about 3% gravel; dark grayish brown; hard; moist; strong reaction w/ HCl; laminated; (Glacial Till).	
														16			
														17	564		
														18	563		
														19	562		
SPT	4	8	14	15	29	1.2								20	561	grades LL=24,PL=13 laminated dark grayish brown & gray @ 19.5'	
														21	560		
														22	559		
						15								22.5	558	Lean CLAY with Sand (CH) - About 75% medium plasticity, medium toughness, slow dilatancy, high dry strength fines; about 15% fine to coarse, rounded to subangular, hard sand; dark gray; hard; moist; strong reaction w/HCl; homogeneous; w/trace cobbles; (Glacial Till).	Cobbles @ 23.0-24.0'.
														23	557		
														24	556		
SPT	5	9	11	16	27	1.5								25	555		
														26	554		Scattered cobbles @ 26.0-27.5'.
														27	553		
			27.5											27.5		DOLOMITE; light gray & very dark gray, mottled; micritic; fresh; hard; (Bass Islands Group).	Auger refusal @ 27.5'. Set nominal 4" temporary steel casing to 29.0'. Below 27.5' continued w/triple tube wire line core barrel
														28	552		
														29	551		
HQ	1	3.7	2.7	1.3	73	35								30			

4/29/2008 3:53 PM DTE - Fermi 3 Geotech

BLACK & VEATCH **BORING LOG**

BORING NO. RW-C1
SHEET 3 OF 19

CLIENT	PROJECT	PROJECT NO.
Detroit Edison	Fermi 3 COL Application	147483

PROJECT LOCATION	COORDINATES	GROUND ELEVATION (DATUM)	TOTAL DEPTH
Monroe, MI	N 6384.1' E 4177.5'	580.7 ft (NAVD 88)	271.2 (feet)

SURFACE CONDITIONS	COORDINATE SYSTEM	DATE START	DATE FINISHED
Gravel parking lot	Plant	06/13/07	06/20/07

LOGGED BY	CHECKED BY	APPROVED BY
Grainger/Bonnie TB	Dogbey/Bonnie TB	Meyer

SAMPLING							CORING									
SAMPLE TYPE	SAMPLE NUMBER	SET 6 INCHES	2ND 6 INCHES	3RD 6 INCHES	N VALUE	SAMPLE RECOVERY	CORE SIZE	RUN NUMBER	RUN LENGTH	RUN RECOVERY	RQD RECOVERY	PERCENT RECOVERY	RQD	DEPTH (FEET)	SAMPLE TYPE	ELEVATION (FEET)	GRAPHIC LOG	CLASSIFICATION OF MATERIALS	REMARKS
														30		550		90°,J,T,No,No,WA,SR @ 30.5-31.7'	w/diamond bit using water as drilling fluid. Core box #1 starts @ 27.5'.
														31				shale partings @ 30.9-32.3'	
			31.2													549			
														32					
																548		32.3 DOLOMITE; olive brown; micritic; fresh; strong; hard; w/shale partings; (Bass Islands Group).	
														33				90°,J,T,No,No,WA,SR @ 32.7-33.1'	
							HQ	2	5.0	4.9	3.5	98	70			547		0°,J,N,No,No,WA,SR @ 33.5'	
														34					
																546		0°,J,N,No,No,WA,SR @ 34.7'	
														35					
																545			
														36					
			36.2													544			
														37				60°,J,VN,No,No,PI,SR @ 37.1-37.5'	
																543		black shale band @ 37.4'	
														38				slightly vuggy @ 37.6-39.2'	
							HQ	3	5.0	5.0	4.8	100	96			542		black shale band @ 38.4'	
														39				calcite vug @ 38.7'	
																541		90°,J,T,No,No,WA,SR @ 39.5-41.2'	
														40					
																540			
														41					
			41.2													539			Core box #2 starts @ 41.2'.
														42				90°,J,T,No,No,WA,SR @ 42.5-43.2'	
																538			
							HQ	4	5.0	4.8	4.1	96	82	43		537			
														44				0°,J,N,No,No,WA,SR @ 44.5'	
																536			
														45					

BLACK & VEATCH **BORING LOG**

BORING NO. RW-C1
SHEET 4 OF 19

CLIENT	PROJECT	PROJECT NO.
Detroit Edison	Fermi 3 COL Application	147483

PROJECT LOCATION	COORDINATES	GROUND ELEVATION (DATUM)	TOTAL DEPTH
Monroe, MI	N 6384.1' E 4177.5'	580.7 ft (NAVD 88)	271.2 (feet)

SURFACE CONDITIONS	COORDINATE SYSTEM	DATE START	DATE FINISHED
Gravel parking lot	Plant	06/13/07	06/20/07

LOGGED BY	CHECKED BY	APPROVED BY
Grainger/Bonnie TB	Dogbey/Bonnie TB	Meyer

SAMPLING							CORING										
SAMPLE TYPE	SAMPLE NUMBER	SET 6 INCHES	2ND 6 INCHES	3RD 6 INCHES	N VALUE	SAMPLE RECOVERY	CORE SIZE	RUN NUMBER	RUN LENGTH	RUN RECOVERY	RQD RECOVERY	PERCENT RECOVERY	RQD	DEPTH (FEET)	SAMPLE TYPE	ELEVATION (FEET)	GRAPHIC LOG	CLASSIFICATION OF MATERIALS	REMARKS
														45					
														46		535			
			46.2															90°,J,T,No,No,WA @ 46.4-47.2'	
														47		534		60°,J,VN,No,No,St/Ir,R @ 47.2-47.5', 47.5-47.9'	
																533			
														48				breccia @ 48.2-48.4'	
							HQ	5	5.0	4.6	1.5	92	30			532			
														49				90°,J,T,No,No,WA @ 49.3-49.6'	
																531			
														50					
																530			
			51.2											51					
																529		60°,J,VN,No,No,St/Ir,R @ 51.8-52.1'	
														52				30° transitions to 90°,J,VN,No,No,WA,R @ 52.0-52.5'	
																528		52.1 DOLOMITE; light gray & dark gray, mottled; micritic; fresh; strong; moderately hard; (Bass Islands Group).	
														53					
							HQ	6	5.0	4.7	3.3	94	66			527		53.6 DOLOMITE; crystalline; brown; micritic; fresh; strong; hard; pitted; (Bass Islands Group).	
														54		526		black shale band @ 54.55-54.6'	
														55					
																525			
														56					
			56.2													524			Core box #3 starts @ 56.2'.
														57					
																523		anhydrite filled vug @ 57.8'	
														58				0°,J,VN,No,No,Pl,R @ 58.0'	
							HQ	7	5.0	5.0	4.6	100	92			522		20°,J,VN,UK,Pa,Pl,SR @ 58.7'	
														59				90°,J,T,No,No,WA @ 59.3-59.6'	
																521			
														60					

4/29/2008 3:53 PM DTE - Fermi 3 Geotech

BLACK & VEATCH

BORING LOG

BORING NO. RW-C1

CLIENT	PROJECT	PROJECT NO.
Detroit Edison	Fermi 3 COL Application	147483

PROJECT LOCATION	COORDINATES	GROUND ELEVATION (DATUM)	TOTAL DEPTH
Monroe, MI	N 6384.1' E 4177.5'	580.7 ft (NAVD 88)	271.2 (feet)

SURFACE CONDITIONS	COORDINATE SYSTEM	DATE START	DATE FINISHED
Gravel parking lot	Plant	06/13/07	06/20/07

LOGGED BY	CHECKED BY	APPROVED BY
Grainger/Bonnie TB	Dogbey/Bonnie TB	Meyer EM

SAMPLING							CORING									
SAMPLE TYPE	SAMPLE NUMBER	SET 6 INCHES	2ND 6 INCHES	3RD 6 INCHES	N VALUE	SAMPLE RECOVERY	CORE SIZE	RUN NUMBER	RUN LENGTH	RUN RECOVERY	RQD RECOVERY	PERCENT RECOVERY	RQD	DEPTH (FEET)	SAMPLE TYPE	ELEVATION (FEET)	GRAPHIC LOG	CLASSIFICATION OF MATERIALS	REMARKS
														60				0°,J @ 60.1', 61.4'	
														61		520			
			61.2											62		519			
																518		0°,J @ 62.4'	
														63		517		62.9 DOLOMITE; light yellowish brown; micritic; fresh; strong; hard; (Bass Islands Group).	
							HQ	8	5.0	4.9	3.8	98	76					0°,J,Ir @ 62.9', 64.4'	
														64		516			
														65		515			Water level @ 10.3' prior to drilling on 06/16/07.
																		0°,J @ 65.4'	
			66.2											66		514			Core box #4 starts @ 66.24'.
														67		513		0°,J,N,Cl,Fi,St @ 67.05' 20°,J,VN,Cl,Fi,St,R @ 67.0-67.05'	
														68		512		67.2 DOLOMITE; oolitic; light brownish gray; very fine grained; fresh; strong; hard; (Bass Islands Group).	
							HQ	9	5.0	4.9	4.45	98	89					60°,J,VN,No,No,WA,SR @ 69.0-69.3'	
														69		511			
														70		510			
														71		509		70.9 DOLOMITE; light brownish gray; micritic; fresh; strong; hard; w/stylolites; (Bass Islands Group). 0°,J,N,Cl,Fi,St @ 71.0'	
			71.2											72		508		0°,J,N,No,No,Ir,R @ 71.4', 71.8', 71.5', 72.0', 72.5', 72.65', 72.75', 73.2', 73.45', 73.7', 73.85' breccia @ 72.1-72.8'	
														73		507		grades grayish brown; w/o stylolites @ 73.0'	
							HQ	10	5.0	4.9	0.95	98	19					90°,J,N,No,No,St @ 73.5-74.3'	
														74		506			
														75				0°,J,N,No,No,Ir,R @ 74.6', 74.7'	

BLACK & VEATCH

BORING LOG

BORING NO. RW-C1

CLIENT	PROJECT	PROJECT NO.
Detroit Edison	Fermi 3 COL Application	147483

PROJECT LOCATION	COORDINATES	GROUND ELEVATION (DATUM)	TOTAL DEPTH
Monroe, MI	N 6384.1' E 4177.5'	580.7 ft (NAVD 88)	271.2 (feet)

SURFACE CONDITIONS	COORDINATE SYSTEM	DATE START	DATE FINISHED
Gravel parking lot	Plant	06/13/07	06/20/07

LOGGED BY	CHECKED BY	APPROVED BY
Grainger/Bonnie TB	Dogbey/Bonnie TB	Meyer

SAMPLING							CORING									
SAMPLE TYPE	SAMPLE NUMBER	SET 6 INCHES	2ND 6 INCHES	3RD 6 INCHES	N VALUE	SAMPLE RECOVERY	CORE SIZE	RUN NUMBER	RUN LENGTH	RUN RECOVERY	RQD RECOVERY	PERCENT RECOVERY	RQD	DEPTH (FEET)	ELEVATION (FEET)	CLASSIFICATION OF MATERIALS	REMARKS
														75		0°,J,N,No,No,Ir,R @ 75.2'	
														76	505	60°,J,VN,UK,Sp,Ir @ 76.0' fractured @ 76.2-77.7'	
										76.2							
														77	504	0°,J,N,No,No,Ir,R @ 76.8'	
														78	503		
																78.2	
							HQ	11	5.0	4.0	0.9	80	18	79	502	BRECCIA; healed; argillaceous; grayish brown; fresh; strong; hard; (Bass Islands Group). 90°,J,T,No,No,Ir,R @ 78.1-80.5';	
														80	501		
														81	500		
										81.2							Core box #5 starts @ 81.2'.
															499	45°,J,T,No,No,Ir,R @ 81.4'	
														82		30°,J,T,No,No,Ir,R @ 81.8'	
															498	60°,J,T,No,No,Ir,R @ 82.2'	
														83			
							HQ	12	5.0	5.0	4.4	100	88		497		
														84			
															496		
														85			
															495		
														86			
										86.2							
															494		
														87			
															493		
														88			
							HQ	13	5.0	5.0	5.0	100	100		492	0°,J,T,UK,Sp,Ir @ 88.5'	
														89		88.6	
															491	DOLOMITE; crystalline; grayish brown; micritic; fresh; strong; hard; banded; (Bass Islands Group).	
														90			

BLACK & VEATCH

BORING LOG

BORING NO. RW-C1

CLIENT	PROJECT	PROJECT NO.
Detroit Edison	Fermi 3 COL Application	147483

PROJECT LOCATION	COORDINATES	GROUND ELEVATION (DATUM)	TOTAL DEPTH
Monroe, MI	N 6384.1' E 4177.5'	580.7 ft (NAVD 88)	271.2 (feet)

SURFACE CONDITIONS	COORDINATE SYSTEM	DATE START	DATE FINISHED
Gravel parking lot	Plant	06/13/07	06/20/07

LOGGED BY	CHECKED BY	APPROVED BY
Grainger/Bonnie TB	Dogbey/Bonnie TB	Meyer

SAMPLING							CORING									
SAMPLE TYPE	SAMPLE NUMBER	SET 6 INCHES	2ND 6 INCHES	3RD 6 INCHES	N VALUE	SAMPLE RECOVERY	CORE SIZE	RUN NUMBER	RUN LENGTH	RUN RECOVERY	RQD RECOVERY	PERCENT RECOVERY	RQD	DEPTH (FEET)	SAMPLE TYPE	ELEVATION (FEET)	GRAPHIC LOG	CLASSIFICATION OF MATERIALS	REMARKS
														90				0°,J,VN,UK,Sp,Pl,SR @ 90.0'	
														91		490		black shale parting - 0°,B,N,Pl,SR @ 90.75'	
										91.2				92		489		0°,J,T,Cl,Sp,Ir,R @ 92.4', 93.7' 90°,J,T,No,No,Pl,R @ 92.6-93.5', 95.5-96.0'	
														93		488		0°,J,T,No,No,Pl @ 93.3'	
							HQ	14	5.0	5.0	1.8	100	36	94		487		94.0 SHALE; black; (Bass Islands Group). 94.2	
														95		486		DOLOMITE; crystalline; grayish brown; micritic; fresh; strong; hard; banded; (Bass Islands Group). 0°,J,T,No,No,Pl @ 94.4' 0°,J,T,No,No,Pl @ 95.1', 95.7'	Core box #6 starts @ 95.0'.
														96		485		slightly fractured @ 95.9-96.1'	
										96.2				97		484		0°,J,T,No,No,Pl @ 96.4' convoluted bedding @ 96.4-97.3' 60°,J,T,No,No,Ir @ 97.0'	
														98		483			
							HQ	15	5.0	4.8	3.4	96	68	99		482		0°,J,T,No,No,Pl @ 98.4', 98.6'	
														100		481		60°,J,T,No,No,Ir @ 99.2' 60°,J,T,No,No,Ir @ 99.6' 0°,J,T,No,No,St @ 99.8' pitted @ 100.0-100.2'	
														101		480		100.2 DOLOMITE; grayish brown; micritic; fresh; strong; hard; (Bass Islands Group).	
										101.2				102		479			
														103		478		0°,J,T,No,No,St @ 102.4'	
							HQ	16	5.0	5.0	3.4	100	68	104		477		102.9 DOLOMITE; argillaceous; gray; micritic; fresh; strong; hard; (Bass Islands Group).	
														105		476		0°,J,T,No,No,St @ 104.2' 60°,J,T,No,No,Ir @ 104.7-105.4'	

BLACK & VEATCH

BORING LOG

BORING NO. RW-C1

CLIENT	PROJECT	PROJECT NO.
Detroit Edison	Fermi 3 COL Application	147483

PROJECT LOCATION	COORDINATES	GROUND ELEVATION (DATUM)	TOTAL DEPTH
Monroe, MI	N 6384.1' E 4177.5'	580.7 ft (NAVD 88)	271.2 (feet)

SURFACE CONDITIONS	COORDINATE SYSTEM	DATE START	DATE FINISHED
Gravel parking lot	Plant	06/13/07	06/20/07

LOGGED BY	CHECKED BY	APPROVED BY
Grainger/Bonnie TB	Dogbey/Bonnie TB	Meyer EM

SAMPLING							CORING									
SAMPLE TYPE	SAMPLE NUMBER	SET 6 INCHES	2ND 6 INCHES	3RD 6 INCHES	N VALUE	SAMPLE RECOVERY	CORE SIZE	RUN NUMBER	RUN LENGTH	RUN RECOVERY	RQD RECOVERY	PERCENT RECOVERY	RQD	DEPTH (FEET)	SAMPLE TYPE	ELEVATION (FEET)	GRAPHIC LOG	CLASSIFICATION OF MATERIALS	REMARKS
														105				60°,J,T,No,No,Pl,R @ 105.5-105.7', 107.6-107.8'	
														106		475		0°,J,T,No,No,St @ 105.7'	
										106.2									
														107		474		0°,J,T,No,No,Pl,R @ 107.1'	
																473		90°,J,T,No,No,WA,R @ 107.2-107.75'	
														108				0°,J,T,No,No,Pl,R @ 108.2', 108.3', 108.7'	
							HQ	17	5.0	5.0	2.2	100	44			472			
														109				0°,J,T,No,No,Pl,R @ 109.0', 109.6'	Core box #7 starts @ 109.0'.
																471		60°,J,T,No,No,Pl,R @ 109.7-109.9'	
														110				110.1	
																470		DOLOMITE; gray; micritic; fresh; strong; hard; massive; (Bass Islands Group).	
														111				0°,J,T,No,No,Pl,R @ 110.1'	
																		60°,J,T,No,No,Pl,R @ 110.2-110.4', 110.7-110.9'	
										111.2						469		0°,J,T,No,No,Pl,R @ 111.4', 112.1', 112.3'	
														112				90°,J,T,No,No,WA,R @ 111.5-112.2'	
																468		90°,J,T,No,No,WA,R @ 112.3-113.6'	
														113				0°,J,T,No,No,Pl,R @ 112.9'	
							HQ	18	5.0	4.9	2.75	98	55			467		0°,J,T,No,No,Pl,R @ 113.6'	
														114					
																466		0°,J,VN,UK,Sp,Pl,R @ 114.6'	
														115					
																465		0°,J,T,No,No,Pl,R @ 115.4'	
														116				grades banded w/shale partings @ 115.5'	
										116.2								90°,J,T,No,No,WA,R @ 116.2-116.6'	
																464			
														117				60°,J,T,No,No,Pl,R @ 116.8-117.1'	
																463		0°,J,T,No,No,Pl,R @ 117.0', 117.15', 117.4'	
														118				117.4	
																462		DOLOMITE; argillaceous; light yellowish brown; micritic; fresh; hard; (Bass Islands Group).	
														119				90°,J,T,No,No,WA,R @ 117.5-117.9'	
							HQ	19	5.0	5.0	3.2	100	64			461		0°,J,T,No,No,Pl,R @ 117.9', 118.2'	
														120					

BLACK & VEATCH

BORING LOG

BORING NO. RW-C1

CLIENT	PROJECT	PROJECT NO.
Detroit Edison	Fermi 3 COL Application	147483

PROJECT LOCATION	COORDINATES	GROUND ELEVATION (DATUM)	TOTAL DEPTH
Monroe, MI	N 6384.1' E 4177.5'	580.7 ft (NAVD 88)	271.2 (feet)

SURFACE CONDITIONS	COORDINATE SYSTEM	DATE START	DATE FINISHED
Gravel parking lot	Plant	06/13/07	06/20/07

LOGGED BY	CHECKED BY	APPROVED BY
Grainger/Bonnie TB	Dogbey/Bonnie TB	Meyer

SAMPLING							CORING										
SAMPLE TYPE	SAMPLE NUMBER	SET 6 INCHES	2ND 6 INCHES	3RD 6 INCHES	N VALUE	SAMPLE RECOVERY	CORE SIZE	RUN NUMBER	RUN LENGTH	RUN RECOVERY	RQD RECOVERY	PERCENT RECOVERY	RQD	DEPTH (FEET)	SAMPLE TYPE	ELEVATION (FEET)	GRAPHIC LOG

CLASSIFICATION OF MATERIALS	REMARKS
60°,J,VN,No,No,Pl,R @ 121.8-122.0' 0°,J,N,No,No,WA,R @ 122.1', 122.9', 124.6' calcite filled vug @ 122.1' 90°,J,N,Ca,Pa,Pl,R @ 122.5-123.5'	Core box #8 starts @ 122.0'.
125.9 DOLOMITE; gray; micritic; fresh; strong; hard; (Salina Group - Unit F). 90°,V,N,Ca,Fi,Pl,R @ 126.0-126.1' fractured @ 126.2-128.2'	
126.8 DOLOMITE; argillaceous; dark greenish gray; micritic; fresh; strong; hard; shale partings; (Salina Group - Unit F). 90°,J,VN,No,No,Pl,R @ 128.4-128.6', 129.3-129.5' fractured @ 128.4-128.6' 70°,J,N,Ca,Pa,Pl,R @ 128.8-129.0' shale partings - 0°,J,N,WA,R @ 129.1',129.3'	
130.9 90°,J,VN,No,No,Pl,R @ 130.6-130.8' 90°,V,MW,Ca,Fi,SR @ 130.8-130.5' DOLOMITE; shaley; grayish brown; fresh; strong; hard; w/some anhydrite bedding; (Salina Group - Unit F). 90°,V,MW,Ca,Fi,SR @ 131.2-131.35' 0°,J,VN,No,No,Pl,SR @ 131.5', 131.8'	

														120			
														121		460	
			121.2											122		459	
							HQ	20	5.0	5.0	3.0	100	60	123		458	
														124		457	
														125		456	
														126		455	
			126.2											127		454	
							HQ	21	5.0	3.2	0.35	64	7	128		453	
														129		452	
														130		451	
			131.2											131		450	
							HQ	22	5.0	2.2	0.0	44	0	132		449	
														133		448	
														134		447	
														135		446	

BLACK & VEATCH

BORING LOG

BORING NO. RW-C1

CLIENT	PROJECT	PROJECT NO.
Detroit Edison	Fermi 3 COL Application	147483

PROJECT LOCATION	COORDINATES	GROUND ELEVATION (DATUM)	TOTAL DEPTH
Monroe, MI	N 6384.1' E 4177.5'	580.7 ft (NAVD 88)	271.2 (feet)

SURFACE CONDITIONS	COORDINATE SYSTEM	DATE START	DATE FINISHED
Gravel parking lot	Plant	06/13/07	06/20/07

LOGGED BY	CHECKED BY	APPROVED BY
Grainger/Bonnie TB	Dogbey/Bonnie TB	Meyer EM

SAMPLING							CORING									
SAMPLE TYPE	SAMPLE NUMBER	SET 6 INCHES	2ND 6 INCHES	3RD 6 INCHES	N VALUE	SAMPLE RECOVERY	CORE SIZE	RUN NUMBER	RUN LENGTH	RUN RECOVERY	RQD RECOVERY	PERCENT RECOVERY	RQD	DEPTH (FEET)	SAMPLE TYPE	ELEVATION (FEET)	GRAPHIC LOG	CLASSIFICATION OF MATERIALS	REMARKS
														135		445		135.2 DOLOMITE; gray; micritic; fresh; strong; hard; (Salina Group - Unit F). 90°,J,VN,Ca,Pa,Pl,SR @ 135.2-135.4' 90°,J,VN,UK,Pa,Pl,SR @ 135.5-136.0' 0°,J,T,No,No,Pl,SR @ 135.5'	
			136.2											136		444		fractured @ 136.2-137.2' 136.2 LIMESTONE; very dark gray; micritic; fresh; strong; hard; (Salina Group - Unit F).	
														137		443			
														138		442		138.2 CLAYSTONE; dark gray; slightly weathered; weak; low hardness; (Salina Group - Unit F). 60°,J,N,Cl,Pa,WA,R @ 138.6' 90°,J,VN,Cl,Pa,Pl,SR @ 138.7' fractured @ 139.0-139.5'	
HQ	23	5.0	2.8	0.0	56	0								139		441			
														140		440			
														141		439		90°,J,MW,Cl,Fi,Pl,R @ 140.9', 141.2', 141.7'	
			141.2											142		438		141.3 DOLOMITE; gray; micritic; fresh; strong; moderately hard; (Salina Group - Unit F). 10°,J,VN,Cl,Pa,Pl,SR @ 142.5', 144.1' 90°,J,N,Cl,Sp,Pl,R @ 142.8-142.9'	
														143		437			Core box #9 starts @ 142.9'.
HQ	24	5.0	4.2	1.9	84	39								144		436		143.4 CLAYSTONE; dark gray; slightly weathered (no discoloration); weak; low hardness; (Salina Group - Unit F).	
														145		435			
														146		434			
			146.2											147		433		147.2 DOLOMITE; gray; micritic; fresh; strong; hard; (Salina Group - Unit F). 90°,J,T,No,No,Pl,SR @ 147.4-147.7', 149.9-151.2' 0°,J,T,No,No,Pl,SR @ 147.6'	
HQ	25	5.0	1.2	0.0	24	0								148		432		148.2 CLAYSTONE; dark gray; slightly weathered (no discloration); weak; low hardness; (Salina Group - Unit F).	
														149		431		149.5 DOLOMITE; gray; micritic; fresh; strong; hard; (Salina	
														150					

BORING LOG

CLIENT	PROJECT	PROJECT NO.
Detroit Edison	Fermi 3 COL Application	147483

PROJECT LOCATION	COORDINATES	GROUND ELEVATION (DATUM)	TOTAL DEPTH
Monroe, MI	N 6384.1' E 4177.5'	580.7 ft (NAVD 88)	271.2 (feet)

SURFACE CONDITIONS	COORDINATE SYSTEM	DATE START	DATE FINISHED
Gravel parking lot	Plant	06/13/07	06/20/07

LOGGED BY	CHECKED BY	APPROVED BY
Grainger/Bonnie TB	Dogbey/Bonnie TB	Meyer

SAMPLING							CORING									
SAMPLE TYPE	SAMPLE NUMBER	SET 6 INCHES	2ND 6 INCHES	3RD 6 INCHES	N VALUE	SAMPLE RECOVERY	CORE SIZE	RUN NUMBER	RUN LENGTH	RUN RECOVERY	RQD RECOVERY	PERCENT RECOVERY	RQD	DEPTH (FEET)	SAMPLE TYPE	ELEVATION (FEET)	GRAPHIC LOG	CLASSIFICATION OF MATERIALS	REMARKS
														150				Group - Unit F).	
																430		150.5 CLAYSTONE; gray; slightly weathered; weak; low hardness; (Salina Group - Unit F).	
														151					
			151.2													429			
														152				152.0 DOLOMITE; gray; micritic; fresh; strong; hard; (Salina Group - Unit F).	
																428		0°,J,T,No,No,Pl,SR @ 152.9'	
														153					
HQ	26	5.0	3.5	0.8	70	16										427		153.6 CLAYSTONE; gray; slightly weathered; weak; low hardness; (Salina Group - Unit F).	
														154				90°,J,T,No,No,Pl,SR @ 154.5-154.7'	
																426			
														155					
																425			
														156				156.1 DOLOMITE; gray; micritic; fresh; strong; hard; (Salina Group - Unit F).	
			156.2													424			
														157				157.1 CLAYSTONE; gray; slightly weathered; weak; low hardness; (Salina Group - Unit F).	
																423			
														158					
HQ	27	5.0	3.0	0.0	60	0										422			
														159					
																421			
														160					
																420		160.3 DOLOMITE; gray; micritic; fresh; strong; hard; (Salina Group - Unit F).	
														161				90°,J,T,No,No,St,SR @ 160.9'	
			161.2															161.0 CLAYSTONE; gray; slightly weathered; weak; low hardness; (Salina Group - Unit F).	
																419		90°,J,T,No,No,St,SR @ 161.1'	
														162					
																418			
														163				163.0 CLAYSTONE; gray; slightly weathered; weak; low hardness; (Salina Group - Unit F).	
HQ	28	5.0	3.0	0.4	60	8										417		90°,J,T,No,No,St,SR @ 163.4-163.5'	
														164				163.8 DOLOMITE; gray; micritic; fresh; strong; hard; (Salina Group - Unit F).	
																416		164.4	
														165					

BLACK & VEATCH

BORING LOG

BORING NO. RW-C1
SHEET 12 OF 19

CLIENT	PROJECT	PROJECT NO.
Detroit Edison	Fermi 3 COL Application	147483

PROJECT LOCATION	COORDINATES	GROUND ELEVATION (DATUM)	TOTAL DEPTH
Monroe, MI	N 6384.1' E 4177.5'	580.7 ft (NAVD 88)	271.2 (feet)

SURFACE CONDITIONS	COORDINATE SYSTEM	DATE START	DATE FINISHED
Gravel parking lot	Plant	06/13/07	06/20/07

LOGGED BY	CHECKED BY	APPROVED BY
Grainger/Bonnie TB	Dogbey/Bonnie TB	Meyer

SAMPLING							CORING									
SAMPLE TYPE	SAMPLE NUMBER	SET 6 INCHES	2ND 6 INCHES	3RD 6 INCHES	N VALUE	SAMPLE RECOVERY	CORE SIZE	RUN NUMBER	RUN LENGTH	RUN RECOVERY	RQD RECOVERY	PERCENT RECOVERY	RQD	DEPTH (FEET)	SAMPLE TYPE	ELEVATION (FEET)	GRAPHIC LOG	CLASSIFICATION OF MATERIALS	REMARKS
														165		415		CLAYSTONE; gray; slightly weathered; weak; low hardness; (Salina Group - Unit F).	
														166					
			166.2													414			Core box #10 starts @ 166.2'.
							HQ	29	5.0	3.3	0.0	66	0	167		413			
														168		412			
														169		411			
														170		410		—170.1— DOLOMITE; gray; micritic; fresh; strong; hard; (Salina Group - Unit F). —171.0—	
			171.2											171		409		CLAYSTONE; gray; slightly weathered (no discoloration); weak; low hardness; (Salina Group - Unit F).	
														172		408		—172.3— DOLOMITE; gray; micritic; fresh; strong; hard; (Salina Group - Unit F).	
							HQ	30	5.0	0.8	0.0	16	0	173		407		—173.5— CLAYSTONE; gray; slightly weathered (no discoloration); weak; low hardness; (Salina Group - Unit F).	
														174		406		—174.8— DOLOMITE; gray; micritic; fresh; strong; hard; (Salina Group - Unit F).	
														175		405			
			176.2											176		404		—176.3— CLAYSTONE; gray; slightly weathered (no discoloration); weak; low hardness; (Salina Group - Unit F).	
														177		403		—177.4— DOLOMITE; gray; micritic; fresh; strong; hard; (Salina Group - Unit F).	
							HQ	31	5.0	1.2	0.0	24	0	178		402		—178.3— CLAYSTONE; gray; slightly weathered (no discoloration); weak; low hardness; (Salina Group - Unit F).	
														179		401		—179.4— DOLOMITE; gray; micritic; fresh; strong; hard; (Salina Group - Unit F).	
														180					

BLACK & VEATCH

BORING LOG

BORING NO. RW-C1

CLIENT	PROJECT	PROJECT NO.
Detroit Edison	Fermi 3 COL Application	147483

PROJECT LOCATION	COORDINATES	GROUND ELEVATION (DATUM)	TOTAL DEPTH
Monroe, MI	N 6384.1' E 4177.5'	580.7 ft (NAVD 88)	271.2 (feet)

SURFACE CONDITIONS	COORDINATE SYSTEM	DATE START	DATE FINISHED
Gravel parking lot	Plant	06/13/07	06/20/07

LOGGED BY	CHECKED BY	APPROVED BY
Grainger/Bonnie TB	Dogbey/Bonnie TB	Meyer EM

SAMPLING							CORING									
SAMPLE TYPE	SAMPLE NUMBER	SET 6 INCHES	2ND 6 INCHES	3RD 6 INCHES	N VALUE	SAMPLE RECOVERY	CORE SIZE	RUN NUMBER	RUN LENGTH	RUN RECOVERY	RQD RECOVERY	PERCENT RECOVERY	RQD	DEPTH (FEET)	ELEVATION (FEET)	GRAPHIC LOG	CLASSIFICATION OF MATERIALS	REMARKS
														180	400		180.3 CLAYSTONE; gray; slightly weathered (no discoloration); weak; low hardness; (Salina Group - Unit F).	
										181.2				181				
							HQ	32	5.0	2.3	0.0	46	0	182	399		182.1 DOLOMITE; gray; micritic; fresh; strong; hard; (Salina Group - Unit F). 182.7 CLAYSTONE; gray; slightly weathered (no discoloration); weak; low hardness; (Salina Group - Unit F).	
														183	398			
														184	397		184.0 DOLOMITE; gray; micritic; fresh; strong; hard; (Salina Group - Unit F). 184.5 CLAYSTONE; gray; slightly weathered (no discoloration); weak; low hardness; (Salina Group - Unit F).	
														185	396			
														186	395		185.9 DOLOMITE; gray; micritic; fresh; strong; hard; (Salina Group - Unit F). 186.6 CLAYSTONE; gray; slightly weathered (no discoloration); weak; low hardness; (Salina Group - Unit F).	
				186.2										187	394			
														188	393			
							HQ	33	5.0	2.4	0.0	48	0	189	392			
														190	391			
														191	390			
				191.2										192	389			
														193	388			
							HQ	34	5.0	0.1	0.0	2	0	194	387			
														195	386			

BLACK & VEATCH

BORING NO. RW-C1
SHEET 14 OF 19

BORING LOG

CLIENT	PROJECT	PROJECT NO.
Detroit Edison	Fermi 3 COL Application	147483

PROJECT LOCATION	COORDINATES	GROUND ELEVATION (DATUM)	TOTAL DEPTH
Monroe, MI	N 6384.1' E 4177.5'	580.7 ft (NAVD 88)	271.2 (feet)

SURFACE CONDITIONS	COORDINATE SYSTEM	DATE START	DATE FINISHED
Gravel parking lot	Plant	06/13/07	06/20/07

LOGGED BY	CHECKED BY	APPROVED BY
Grainger/Bonnie TB	Dogbey/Bonnie TB	Meyer EM

SAMPLING: SAMPLE TYPE | SAMPLE NUMBER | SET 6 INCHES | 2ND 6 INCHES | 3RD 6 INCHES | N VALUE | SAMPLE RECOVERY

CORING: CORE SIZE | RUN NUMBER | RUN LENGTH | RUN RECOVERY | RQD RECOVERY | PERCENT RECOVERY | RQD

SAMPLE TYPE	SAMPLE NUMBER	SET 6 INCHES	2ND 6 INCHES	3RD 6 INCHES	N VALUE	SAMPLE RECOVERY	DEPTH (FEET)	ELEVATION (FEET)	CLASSIFICATION OF MATERIALS	REMARKS
							195	385		
							196			
			196.2					384		Water level @ 22.3' prior to drilling on 06/18/07.
							197			
								383		
							198			
HQ	35	5.0	0.2	0.0	4	0		382		
							199			
								381		
							200			
								380		
							201			
			201.2					379		
							202		202.0	
HQ	36	2.5	1.5	0.0	60	0		378	DOLOMITE; shaley; pale yellow; micritic; fresh; strong; hard; massive; (Salina Group - Unit F). 10°,J,T,UK,Pa,Pl,SR @ 202.2', 202.4', 202.7', 202.8' grades light gray @ ~202.9'	
							203		203.3	
								377	LIMESTONE; vuggy; dark brown; micritic; fresh; very strong; hard; (Salina Group - Unit F).	Water pressure on rig spiked
			203.7				204			
HQ	37	2.5	1.0	0.0	40	0		376		
							205			
								375	30°,J,VN,No,No,Pl,R @ 205.8'	Core box #11 starts @ 205.5'.
							206			
			206.2					374	206.5	
							207		DOLOMITE; shaley; light yellowish brown; micritic; fresh; strong; hard; massive; (Salina Group - Unit F).	
									207.2	
HQ	38	2.5	1.3	0.0	52	0		373	CLAYSTONE; light gray; soft; (Salina Group - Unit F).	
							208		208.0	
									CLAYSTONE; gray; (Salina Group - Unit F).	
			208.7					372		
							209		209.0	Water level @ 23.9' prior to drilling on 06/20/07.
								371	LIMESTONE; dark gray; micritic; fresh; moderately strong; moderately hard; (Salina Group - Unit F).	
							210			

BLACK & VEATCH

BORING LOG

BORING NO. RW-C1

CLIENT	PROJECT	PROJECT NO.
Detroit Edison	Fermi 3 COL Application	147483

PROJECT LOCATION	COORDINATES	GROUND ELEVATION (DATUM)	TOTAL DEPTH
Monroe, MI	N 6384.1' E 4177.5'	580.7 ft (NAVD 88)	271.2 (feet)

SURFACE CONDITIONS	COORDINATE SYSTEM	DATE START	DATE FINISHED
Gravel parking lot	Plant	06/13/07	06/20/07

LOGGED BY	CHECKED BY	APPROVED BY
Grainger/Bonnie TB	Dogbey/Bonnie TB	Meyer

SAMPLING							CORING									
SAMPLE TYPE	SAMPLE NUMBER	SET 6 INCHES	2ND 6 INCHES	3RD 6 INCHES	N VALUE	SAMPLE RECOVERY	CORE SIZE	RUN NUMBER	RUN LENGTH	RUN RECOVERY	RQD RECOVERY	PERCENT RECOVERY	RQD	DEPTH (FEET)	SAMPLE TYPE	ELEVATION (FEET)	GRAPHIC LOG	CLASSIFICATION OF MATERIALS	REMARKS
							HQ	39	2.5	0.7	0.0	28	0	210		370		210.2 CLAYSTONE; gray; fresh; (Salina Group - Unit F).	
							HQ	40	2.5	211.2 2.2	0.8	88	32	211 212 213		369 368		212.0 LIMESTONE; dark gray; micritic; fresh; moderately strong; hard; vuggy; (Salina Group - Unit F).	
							HQ	41	2.5	213.7 1.9	0.4	76	16	214 215 216		367 366 365		grades dark grayish brown @ 214.0' 90°,J,T,No,No,WA,R @ 214.2-214.8'	
							HQ	42	5.0	216.2 3.5	0.8	70	16	217 218 219 220 221		364 363 362 361 360		218.5 DOLOMITE; shaley; light brownish gray; micritic; fresh; very strong; hard; massive; (Salina Group - Unit F). 0°,J,T,No,No,Pl,R @ 219.0', 219.3', 219.4' 45°,J,T,No,No,Pl,S @ 219.6-219.7', 219.8-219.9' black shale @ 220.2-220.5' 90°,J,T,No,No,WA,R @ 220.5-220.7' 220.5 DOLOMITE; gray & black; fresh; strong; hard; thin to medium bedded; (Salina Group - Unit F).	
							HQ	43	5.0	221.2 2.8	0.7	56	14	222 223 224 225		359 358 357 356		221.0 LIMESTONE; dark grayish brown; micritic; moderately strong; hard; (Salina Group - Unit F). 223.0 DOLOMITE; shaley; pale brown; micritic; fresh; strong; hard; massive; (Salina Group - Unit F). 60°,J,N,Cl,Pa,Pl,R @ 223.9' 90°,J,VN,No,No,WA,R @ 224.0-224.5' 90°,J,VN,UK,Pa,Pl,R @ 224.2-224.5' 224.7	

BLACK & VEATCH

BORING LOG

BORING NO. RW-C1
SHEET 16 OF 19

CLIENT	PROJECT	PROJECT NO.
Detroit Edison	Fermi 3 COL Application	147483

PROJECT LOCATION	COORDINATES	GROUND ELEVATION (DATUM)	TOTAL DEPTH
Monroe, MI	N 6384.1' E 4177.5'	580.7 ft (NAVD 88)	271.2 (feet)

SURFACE CONDITIONS	COORDINATE SYSTEM	DATE START	DATE FINISHED
Gravel parking lot	Plant	06/13/07	06/20/07

LOGGED BY	CHECKED BY	APPROVED BY
Grainger/Bonnie TB	Dogbey/Bonnie TB	Meyer EM

SAMPLING							CORING							DEPTH (FEET)	SAMPLE TYPE	ELEVATION (FEET)	GRAPHIC LOG	CLASSIFICATION OF MATERIALS	REMARKS
SAMPLE TYPE	SAMPLE NUMBER	SET 6 INCHES	2ND 6 INCHES	3RD 6 INCHES	N VALUE	SAMPLE RECOVERY	CORE SIZE	RUN NUMBER	RUN LENGTH	RUN RECOVERY	RQD RECOVERY	PERCENT RECOVERY	RQD						
														225		355		LIMESTONE; brown; micritic; fresh; strong; hard; (Salina Group - Unit F).	Core box #12 starts @ 225.5'.
			226.2											226					
														227		354			
														228		353			
							HQ	44	5.0	2.5	0.7	50	14	229		352		228.5 — DOLOMITE; shaley; light brownish gray; micritic; strong; hard; massive; (Salina Group - Unit F). 0°,J,VN,No,No,Pl,R @ 229.0' 40°,J,N,UK,Pa,R @ 229.4-229.5'	
														230		351		230.2 — LIMESTONE; brown; micritic; fresh; strong; hard; (Salina Group - Unit F).	
			231.2											231		350			
														232		349			
														233		348			
							HQ	45	5.0	2.0	0.0	40	0	234		347		233.5 — DOLOMITE; shaley; light brownish gray; micritic; fresh; strong; hard; massive; (Salina Group - Unit F).	
														235		346		70°,J,VN,UK,Pa,WA,R @ 234.8'	
														236		345		235.2 — SHALE; fissile; grayish brown; weathered; very weak; low hardness; w/bands of dolomite & limestone; (Salina Group - Unit F). 90°,J,T,No,No,Pl,S @ 235.4-235.6' 0°,J,T,Cl,Pa,Pl,SR @ 235.6'	
			236.2											237		344			
							HQ	46	2.5	0.2	0.0	8	0	238		343			
			238.7											239		342			
														240		341			

BLACK & VEATCH

BORING LOG

BORING NO. RW-C1

CLIENT	PROJECT	PROJECT NO.
Detroit Edison	Fermi 3 COL Application	147483

PROJECT LOCATION	COORDINATES	GROUND ELEVATION (DATUM)	TOTAL DEPTH
Monroe, MI	N 6384.1' E 4177.5'	580.7 ft (NAVD 88)	271.2 (feet)

SURFACE CONDITIONS	COORDINATE SYSTEM	DATE START	DATE FINISHED
Gravel parking lot	Plant	06/13/07	06/20/07

LOGGED BY	CHECKED BY	APPROVED BY
Grainger/Bonnie TB	Dogbey/Bonnie TB	Meyer EM

SAMPLING							CORING									
SAMPLE TYPE	SAMPLE NUMBER	SET 6 INCHES	2ND 6 INCHES	3RD 6 INCHES	N VALUE	SAMPLE RECOVERY	CORE SIZE	RUN NUMBER	RUN LENGTH	RUN RECOVERY	RQD RECOVERY	PERCENT RECOVERY	RQD	DEPTH (FEET)	SAMPLE TYPE	ELEVATION (FEET)	GRAPHIC LOG	CLASSIFICATION OF MATERIALS	REMARKS
							HQ	47	2.5	0.0	0.0	0	0	240					
																340			
														241					
										241.2									
							HQ	48	2.5	0.1	0.0	4	0	242		339			
														243		338			
										243.7									
							HQ	49	2.5	0.3	0.0	12	0	244		337			
														245		336			
																335			
														246					
										246.2									
							HQ	50	2.5	0.7	0.0	28	0	247		334			
														248		333			
																		248.0	
																		DOLOMITE; shaley; grayish brown; micritic; fresh; strong; hard; (Salina Group - Unit F).	
										248.7						332			
							HQ	51	2.5	1.9	0.4	76	16	249					
																331			
														250				grades not shaley; dark gray @ 250.3'	
																330		0°,J,T,No,No,Pl,R @ 250.7', 250.9', 251.1'	
														251				251.1	
										251.2								DOLOMITE; shaley; light brownish gray; micritic; fresh; strong; hard; massive; some pitting; (Salina Group - Unit E).	
																329			
														252					
																328			
														253				0°,J,T,No,No,Pl,R @ 253.0'	
							HQ	52	5.0	3.5	0.7	70	14			327		0°,J,T,No,No,Pl,R @ 253.7', 253.8', 253.9', 254.0'	
														254				0°,J,T,No,No,Pl,R @ 254.3', 254.5'	
																326			
														255					

BLACK & VEATCH

BORING LOG

BORING NO. RW-C1

CLIENT	PROJECT	PROJECT NO.
Detroit Edison	Fermi 3 COL Application	147483

PROJECT LOCATION	COORDINATES	GROUND ELEVATION (DATUM)	TOTAL DEPTH
Monroe, MI	N 6384.1' E 4177.5'	580.7 ft (NAVD 88)	271.2 (feet)

SURFACE CONDITIONS	COORDINATE SYSTEM	DATE START	DATE FINISHED
Gravel parking lot	Plant	06/13/07	06/20/07

LOGGED BY	CHECKED BY	APPROVED BY
Grainger/Bonnie TB	Dogbey/Bonnie TB	Meyer EM

SAMPLING: SAMPLE TYPE, SAMPLE NUMBER, SET 6 INCHES, 2ND 6 INCHES, 3RD 6 INCHES, N VALUE, SAMPLE RECOVERY

CORING: CORE SIZE, RUN NUMBER, RUN LENGTH, RUN RECOVERY, RQD RECOVERY, PERCENT RECOVERY, RQD

SAMPLE TYPE	SAMPLE NUMBER	SET 6 INCHES	2ND 6 INCHES	3RD 6 INCHES	N VALUE	SAMPLE RECOVERY	DEPTH (FEET)	ELEVATION (FEET)	CLASSIFICATION OF MATERIALS	REMARKS
							255		50°,J,T,No,No,Pl,SR @ 254.9-255.1' 0°,J,T,No,No,Pl,R @ 255.0', 255.5'	
							256	325		
			256.2							Core box #13 starts @ 256.2'.
							257	324		
							258	323		
HQ	53	5.0	3.2	1.2	64	24	259	322	90°,J,T,No,No,WA,R @ 258.5-259.0' 10°,J,T,No,No,Pl,SR @ 259.3', 259.8', 260.0'	
							260	321		
							261	320	0°,J,T,No,No,Pl,SR @ 260.5', 260.9'	
			261.2							
							262	319		
							263	318	90°,J,T,No,No,Pl,S @ 263.1'	
									263.2	
HQ	54	5.0	5.0	4.4	100	88	264	317	DOLOMITE; gray; micritic; fresh; strong; hard; banded; (Salina Group - Unit E). grades light brownish gray @ 263.9' anhydrite band @ 263.95-264.1' 20°,J,T,No,No,Pl,S @ 264.15, 264.6' 90°,J,VN,No,No,WA,S @ 264.7', 265.3'	
							265	316	anhydrite band @ 265.3' grades gray @ 265.4'	
							266	315		
			266.2							
							267	314	black shale band; hard @ 266.9-267.1' grades light brownish gray @ 267.1' 0°,V,VN,anhydrite,Fi,Pl @ 267.4', 267.6', 267.7', 268.3'	
							268	313	90°,J,VN,No,No,WA,SR @ 267.8', 268.0', 269.1', 270.2'	
HQ	55	5.0	5.0	4.8	100	96	269	312	anhydrite band @ 268.5-268.6' 90°,V,VN,anhydrite,Pl,S @ 268.9' 0°,V,N,anhydrite,Fi,Pl @ 269.2'	
							270	311	grades gray @ 269.5'	

BLACK & VEATCH

BORING LOG

BORING NO. RW-C1

CLIENT	PROJECT	PROJECT NO.
Detroit Edison	Fermi 3 COL Application	147483

PROJECT LOCATION	COORDINATES	GROUND ELEVATION (DATUM)	TOTAL DEPTH
Monroe, MI	N 6384.1' E 4177.5'	580.7 ft (NAVD 88)	271.2 (feet)

SURFACE CONDITIONS	COORDINATE SYSTEM	DATE START	DATE FINISHED
Gravel parking lot	Plant	06/13/07	06/20/07

LOGGED BY	CHECKED BY	APPROVED BY
Grainger/Bonnie TB	Dogbey/Bonnie TB	Meyer EM

SAMPLING							CORING									
SAMPLE TYPE	SAMPLE NUMBER	SET 6 INCHES	2ND 6 INCHES	3RD 6 INCHES	N VALUE	SAMPLE RECOVERY	CORE SIZE	RUN NUMBER	RUN LENGTH	RUN RECOVERY	RQD RECOVERY	PERCENT RECOVERY	RQD	DEPTH (FEET)	SAMPLE TYPE	ELEVATION (FEET)	GRAPHIC LOG	CLASSIFICATION OF MATERIALS	REMARKS
														270				0°,V,MW,anhydrite,Fi,Pl @ 269.9'	
																310		grades light brownish gray @ 270.1'	
														271				anhydrite filled vugs @ 270.5-271.2'	
																309			Bottom of boring @ 271.2'. Water level @ 12.7' @ completion of drilling. Boring caved @ 158.5'. Backfilled w/ bentonite grout to 200' on 08/12/07 & 08/13/07, chips to 1' below ground surface on 08/15/07 & 08/16/07, then gravel to surface on 08/21/07.
														272					
																308			
														273					
																307			
														274					
																306			
														275					
																305			
														276					
																304			
														277					
																303			
														278					
																302			
														279					
																301			
														280					
																300			
														281					
																299			
														282					
																298			
														283					
																297			
														284					
																296			
														285					

4/29/2008 3:53 PM DTE - Fermi 3 Geotech

BLACK & VEATCH

BORING LOG

BORING NO. RW-C2

CLIENT	PROJECT	PROJECT NO.
Detroit Edison	Fermi 3 COL Application	147483

PROJECT LOCATION	COORDINATES	GROUND ELEVATION (DATUM)	TOTAL DEPTH
Monroe, MI	N 6384.1' E 4312.0'	580.9 ft (NAVD 88)	75.5 (feet)

SURFACE CONDITIONS	COORDINATE SYSTEM	DATE START	DATE FINISHED
Level gravel parking	Plant	06/13/07	08/01/07

LOGGED BY	CHECKED BY	APPROVED BY
Grainger/Ang/Bonnie TB	Dogbey/Bonnie TB	Meyer

SAMPLING							CORING							DEPTH (FEET)	SAMPLE TYPE	ELEVATION (FEET)	GRAPHIC LOG	CLASSIFICATION OF MATERIALS	REMARKS
SAMPLE TYPE	SAMPLE NUMBER	SET 6 INCHES	2ND 6 INCHES	3RD 6 INCHES	N VALUE	SAMPLE RECOVERY	CORE SIZE	RUN NUMBER	RUN LENGTH	RUN RECOVERY	RQD RECOVERY	PERCENT RECOVERY	RQD						
														0				Poorly graded GRAVEL with Sand (GP) - About 80% fine to coarse, angular, hard gravel w/max. size 1½"; about 15% fine to coarse, angular, hard sand; about 5% fines; dark grayish brown; dry; strong reaction w/ HCl; homogeneous; (Fill).	Boring advanced w/vacuum excavation.
														1		580			
														0.5				CONCRETE - 0.8' thick	
														1.3				Well graded GRAVEL with Silt and Sand (GW-GM) - About 75% fine to coarse, angular, hard gravel w/max. size 3"; about 15% fine to coarse, angular, hard sand; about 10% fines; dark grayish brown; moist; strong reaction w/HCl; homogeneous; (Fill).	
														2		579			
														3		578			
														4		577			
														5		576			
			5.8											6		575			Below 5.8' continued w/4" ID sonic continuous sampler w/nominal 6" temporary steel casing advanced w/sampler. Discrete sample S1A collected @ 7.0-8.0'.
S	1					NR								6.5				Poorly graded GRAVEL with Silt and Sand (GP-GM) - About 70% fine to coarse, subangular to subrounded, hard gravel w/max. size 3"; about 20% fine to coarse, subangular to subrounded sand; about 10% fines; dark grayish brown; moist; original field sample had about 25% (by volume) cobbles; (Fill).	
														7		574			
														8		573			
														9		572			
			10.0											10		571			
S	2					NR								11		570			
														12		569			
														12.5				Lean CLAY (CL) - About 90% medium plasticity, medium toughness, no dilatancy fines; about 10% fine to medium sand; dark greenish gray; soft; moist; (Lacustrine Deposit).	Discrete sample S2A collected @ 12.5-13.0'.
			13.0											13		568		grading to about 100% fines; olive brown; soft; moist	Below 13.0' continued w/ NWJ rods & 4½" tricone bit using bentonite mud as drilling fluid.
SPT	3	WOH	WOH	1	1	1.1								14		567			
														15		566			

BLACK & VEATCH

BORING LOG

BORING NO. RW-C2

CLIENT	PROJECT	PROJECT NO.
Detroit Edison	Fermi 3 COL Application	147483

PROJECT LOCATION	COORDINATES	GROUND ELEVATION (DATUM)	TOTAL DEPTH
Monroe, MI	N 6384.1' E 4312.0'	580.9 ft (NAVD 88)	75.5 (feet)

SURFACE CONDITIONS	COORDINATE SYSTEM	DATE START	DATE FINISHED
Level gravel parking	Plant	06/13/07	08/01/07

LOGGED BY	CHECKED BY	APPROVED BY
Grainger/Ang/Bonnie TB	Dogbey/Bonnie TB	Meyer

SAMPLING: SAMPLE TYPE	SAMPLE NUMBER	SET 6 INCHES	2ND 6 INCHES	3RD 6 INCHES	N VALUE	SAMPLE RECOVERY	CORING: CORE SIZE	RUN NUMBER	RUN LENGTH	RUN RECOVERY	RQD RECOVERY	PERCENT RECOVERY	RQD	DEPTH (FEET)	ELEVATION (FEET)	CLASSIFICATION OF MATERIALS	REMARKS
														15			SPT performed w/D-50 automatic hammer. PP = 1.25 TSF @ 14.5'.
SPT	4	1	2	2	4	1.3								16	565		
														17	564		PP = 2.0 TSF @ 17.0'.
														18	563		
																18.0 — Lean CLAY (CL) - About 100% medium plasticity, medium toughness, no dilatancy fines; light olive brown; firm; moist; homogeneous; (Glacial Till).	
TW	5					0.7								19	562		
														20	561		
																20.5 — Sandy Lean CLAY (CL) - About 65% medium plasticity, medium toughness, no dilatancy fines; about 30% fine to coarse, subrounded sand; about 5% fine, subrounded & subangular, hard gravel w/max. size 5/8"; light olive brown; hard; moist; (Glacial Till).	
SPT	6	51	33	17	50	0.7								21	560		PP > 4.5 TSF @ 21.5'.
														22	559		
														23	558		
														24	557		PP > 4.5 TSF @ 24.0'.
SPT	7	7	16	29	45	1.4										grades dark gray @ 24.5'	
														25	556		
														26	555		
																26.0 — Sandy Lean CLAY with gravel (CL) - About 65% medium plasticity, medium toughness, no dilatancy fines; about 20% fine to coarse, subrounded & subangular sand; about 15% fine to coarse, subrounded & subangular, hard gravel w/max. size 1½"; dark gray; (Glacial Till).	
SPT	8	14	19	20	39	1.5								27	554		PP > 4.5 TSF @ 27.0'.
														28	553		
																28.0 — Clayey GRAVEL (GC) - About 75% fine to coarse, subangular, hard gravel w/max. size 1½"; about 15% fines; about 10% fine to coarse, subangular sand; gray; very dense; moist	
SPT	9	22	17	54/3"	50+	1.1								29	552		
			29.7											30	551	29.7	Below 29.7'

BLACK & VEATCH

BORING LOG

BORING NO. RW-C2

CLIENT	PROJECT	PROJECT NO.
Detroit Edison	Fermi 3 COL Application	147483

PROJECT LOCATION	COORDINATES	GROUND ELEVATION (DATUM)	TOTAL DEPTH
Monroe, MI	N 6384.1' E 4312.0'	580.9 ft (NAVD 88)	75.5 (feet)

SURFACE CONDITIONS	COORDINATE SYSTEM	DATE START	DATE FINISHED
Level gravel parking	Plant	06/13/07	08/01/07

LOGGED BY	CHECKED BY	APPROVED BY
Grainger/Ang/Bonnie TB	Dogbey/Bonnie TB	Meyer

SAMPLING: SAMPLE TYPE	SAMPLE NUMBER	SET 6 INCHES	2ND 6 INCHES	3RD 6 INCHES	N VALUE	SAMPLE RECOVERY	CORING: CORE SIZE	RUN NUMBER	RUN LENGTH	RUN RECOVERY	RQD RECOVERY	PERCENT RECOVERY	RQD	DEPTH (FEET)	SAMPLE TYPE	ELEVATION (FEET)	GRAPHIC LOG	CLASSIFICATION OF MATERIALS	REMARKS
														30				DOLOMITE; crystalline; grayish brown & dark gray, mottled; micritic; fresh; strong; hard; (Bass Islands Group).	continued w/4" ID sonic continuous sampler w/nominal 6" temporary steel casing advanced w/sampler. Split spoon refusal @ 29.7'. Sonic core stored in box labeled SC1.
														31		550			
														31.3				DOLOMITE; crystalline; light brownish gray; micritic; fresh; strong; hard; (Bass Islands Group).	
														32		549			
S	10					5.0								33		548			
														34		547			
														35		546			
														36		545			Set nominal 6" temporary steel casing to 35.7'. Core box #1 starts @ 36.0'. Hole open at 36.0'. Below 36.0' continued w/ triple tube wire line core barrel w/diamond bit using water as drilling fluid. Water level @ 17.0' prior to drilling on 08/01/07. No drilling fluid return @ 38.0'.
			36.0											36.0				DOLOMITE; dark grayish brown; fresh; strong; hard; (Bass Islands Group). shale partings - 0°,B,VN,Pl,SR @ 36.7', 36.9'	
														37		544			
HQ	1	2.6	2.6	2.4	100	92								37.4				DOLOMITE; brecciated, healed; dark gray; fresh; strong; hard; w/clasts of grayish brown dolomite; (Bass Islands Group). 15°,J,VN,No,No,Pl,R @ 37.75-37.85' 40°,J,VN,No,No,Pl,R @ 38.1-38.3'	
														38		543			
			38.6											38.4				DOLOMITE; argillaceous; dark grayish brown/grayish brown; fresh; strong; hard; w/stylolites & banding; (Bass Islands Group). shale parting - 0°,B,N,Pl,SR @ 38.7' 90°,J,T,No,No,WA,SR @ 38.8-40.6' shale partings - 0°,B,VN,Pl,SR @ 40.15', 40.2'	
														39		542			
HQ	2	2.0	1.9	1.8	95	90								40		541			
			40.6											41		540		0°,B,T,No,No,Pl,SR @ 41.0' shale parting @ 41.0' vugs @ 41.15-47.25'	
														42		539		shale partings - 0°,B,T,Pl,SR @ 42.1', 42.55', 42.75', 42.8'	
HQ	3	5.0	5.0	4.2	100	84								43		538			
														44		537		shale partings - 0°,B,T,Pl,SR @ 43.6', 44.1'	
																		shale partings - 0°,B,T,Pl,SR @ 44.3', 44.4'	
														45		536			

BLACK & VEATCH **BORING LOG** BORING NO. RW-C2 SHEET 4 OF 6

CLIENT	PROJECT	PROJECT NO.
Detroit Edison	Fermi 3 COL Application	147483

PROJECT LOCATION	COORDINATES	GROUND ELEVATION (DATUM)	TOTAL DEPTH
Monroe, MI	N 6384.1' E 4312.0'	580.9 ft (NAVD 88)	75.5 (feet)

SURFACE CONDITIONS	COORDINATE SYSTEM	DATE START	DATE FINISHED
Level gravel parking	Plant	06/13/07	08/01/07

LOGGED BY	CHECKED BY	APPROVED BY
Grainger/Ang/Bonnie TB	Dogbey/Bonnie TB	Meyer

SAMPLING							CORING									
SAMPLE TYPE	SAMPLE NUMBER	SET 6 INCHES	2ND 6 INCHES	3RD 6 INCHES	N VALUE	SAMPLE RECOVERY	CORE SIZE	RUN NUMBER	RUN LENGTH	RUN RECOVERY	RQD RECOVERY	PERCENT RECOVERY	RQD	DEPTH (FEET)	SAMPLE TYPE	ELEVATION (FEET)	GRAPHIC LOG	CLASSIFICATION OF MATERIALS	REMARKS
														45				0°,B,T,No,No,Pl,SR @ 44.9'	
						45.6								46		535		grades massive; gray shale parting - 0°,B,T,Pl,SR @ 45.6' shale partings - 0°,B,VN,Pl,SR @ 45.65', 45.8', 47.1'	
														47		534		0°,B,T,No,No,Pl,SR @ 47.1', 47.2' 90°,J,T,No,No,Pl,SR @ 47.2-48.2' (parallel)	
HQ	4	5.0	5.0	1.35	100	27								48		533		48.2 DOLOMITE; grayish brown; micritic; fresh; strong; hard; w/stylolites; (Bass Islands Group).	
														49		532		48.4 DOLOMITE; argillaceous; dark grayish brown; fresh; strong; hard; banded; (Bass Islands Group). shale partings - 0°,B,VN,Pl,SR @ 48.4', 48.5'	
														50		531		0°,B,T,No,No,Pl,SR @ 49.1', 49.2' 75°,J,T,No,No,Pl,SR @ 49.2-49.5',50.2-50.5' 90°,J,T,No,No,Pl,SR @ 49.7-49.9' fossils @ 49.8'	
						50.6								51		530		50.3 DOLOMITE; gray; micritic; fresh; strong; hard; pitted; (Bass Islands Group).	Core box #2 starts @ 50.6'.
														52		529		0°,B,No,No,WA,Pl,SR @ 50.5', 51.0' 90°,J,T,No,No,Pl,SR @ 50.6-51.2' fractured @ 51.1-51.3'	
HQ	5	5.0	5.0	2.1	100	42								53		528		51.5 DOLOMITE; light gray & dark gray, mottled; micritic; fresh; strong; very hard; (Bass Islands Group). 30°,J,T,No,No,Pl,SR @ 51.9-52.2'	
														54		527		52.4 DOLOMITE; argillaceous; light gray; micritic; fresh; strong; hard; banded; w/stylolites; (Bass Islands Group). shale parting (0.1") @ 52.4' 0°,B,T,No,No,WA,SR @ 52.9' 90°,J,T,No,No,Pl,SR @ 53.9-54.1'	
														55		526		shale parting - 0°,B,VN,Pl,SR @ 53.9' shale; very dark gray @ 54.2-54.25'	
						55.6								56		525		54.3 DOLOMITE; dark grayish brown; micritic; fresh; strong; hard; pitted; (Bass Islands Group). 60°,J,T,No,No,Pl,SR @ 54.5-54.7'	
														57		524		shale partings - 0°,B,T,Pl,SR @ 55.1',55.3',58.4' 90°,J,T,No,No,Pl,SR @ 55.6-56.1' 0°,B,T,No,No,Pl,SR @ 55.7', 56.1', 59.3' shale partings - 0°,B,T,Pl,SR @ 56.2', 57.2', 57.5'	
HQ	6	5.0	4.7	2.9	94	58								58		523		15°,J,T,No,No,Pl,SR @ 57.7-57.8', 57.9-58.0'	
														59		522		0°,J,T,No,No,Pl,SR @ 58.1-58.3' 50°,J,T,No,No,WA,R @ 58.4-59.6'	
														60		521		fossils @ 59.4'	

BLACK & VEATCH

BORING LOG

BORING NO. RW-C2

CLIENT	PROJECT	PROJECT NO.
Detroit Edison	Fermi 3 COL Application	147483

PROJECT LOCATION	COORDINATES	GROUND ELEVATION (DATUM)	TOTAL DEPTH
Monroe, MI	N 6384.1' E 4312.0'	580.9 ft (NAVD 88)	75.5 (feet)

SURFACE CONDITIONS	COORDINATE SYSTEM	DATE START	DATE FINISHED
Level gravel parking	Plant	06/13/07	08/01/07

LOGGED BY	CHECKED BY	APPROVED BY
Grainger/Ang/Bonnie TB ECA	Dogbey/Bonnie TB	Meyer EM

SAMPLING							CORING									
SAMPLE TYPE	SAMPLE NUMBER	SET 6 INCHES	2ND 6 INCHES	3RD 6 INCHES	N VALUE	SAMPLE RECOVERY	CORE SIZE	RUN NUMBER	RUN LENGTH	RUN RECOVERY	RQD RECOVERY	PERCENT RECOVERY	RQD	DEPTH (FEET)	SAMPLE TYPE	ELEVATION (FEET)	GRAPHIC LOG	CLASSIFICATION OF MATERIALS	REMARKS
														60				grades grayish brown @ 59.9' 60°,J,T,No,No,Pl,R @ 60.0-60.3'	
										60.6				61		520		0°,B,No,No,Ir,SR @ 60.8'	
																		61.1 DOLOMITE; light grayish brown; micritic; fresh; strong; hard; w/stylolites; (Bass Islands Group). 0°,B,No,No,Pl,SR @ 61.7' 60°,J,T,No,No,Pl,SR @ 61.9-62.6' grades w/o stylolites @ 62.1'	
														62		519			
HQ	7	5.0	5.0	2.9	100	58								63		518		fractured @ 62.7-63.1', 63.3-63.6'	
														64		517		90°,J,T,No,No,WA,SR @ 63.9-65.0'	
														65		516		grades w/stylolites @ 64.5' breccia, healed; fine to medium grained @ 64.8-64.9', 65.05-65.15'	Core box #3 starts @ 64.6'.
										65.6				66		515		0°,B,No,No,Pl, SR @ 66.1', 66.25'	
																		90°,J,T,UK,Pa,Pl,SR @ 66.4-66.55' 66.6	
														67		514		DOLOMITE; oolitic; light brownish gray; very fine grained; fresh; strong; hard; (Bass Islands Group). 0°,B,T,No,No,Pl,SR @ 67.4'	
HQ	8	5.0	4.8	3.3	96	66								68		513			
																		50°,J,T,No,No,Pl,SR @ 68.4-68.7' 68.7	
														69		512		DOLOMITE; light gray; micritic; fresh; strong; hard; convoluted bedding; (Bass Islands Group). 40°,J,T,No,No,Pl,SR @ 69.0-69.15'	
																		69.7 SHALE; black; fresh; very weak; low hardness; (Bass Islands Group).	
										70.6				70		511		69.8 DOLOMITE; argillaceous; light brownish gray; micritic; fresh; strong; hard; (Bass Islands Group). shale partings - 0°,J,VN,Pl,SR @ 69.9', 70.2', 70.3' 90°,J,T,No,No,Pl,SR @ 70.2-70.6'	
														71		510			
																		70.4 DOLOMITE; brecciated; light brownish gray; micritic; fresh; strong; hard; (Bass Islands Group). 90°,J,T,VN,No,No,WA,SR @ 70.6-72.0' fractured @ 71.3-71.8'	
														72		509			
HQ	9	5.0	4.9	1.7	98	34								73		508		71.6 DOLOMITE; argillaceous; grayish brown; micritic; fresh; strong; hard; banded; w/stylolites; (Bass Islands Group). shale partings - 0°,B,T,SR @ 72.0', 72.4', 73.0', 74.05' 0°,B,T,No,No,Pl,SR @ 72.4', 73.6' 70°,J,VN,No,No,Pl,SR @ 72.6-73.3' fractured @ 73.45-73.5', 74.8-74.85'	
														74		507			
														75		506			

BLACK & VEATCH

BORING LOG

BORING NO. RW-C2

CLIENT	PROJECT	PROJECT NO.
Detroit Edison	Fermi 3 COL Application	147483

PROJECT LOCATION	COORDINATES	GROUND ELEVATION (DATUM)	TOTAL DEPTH
Monroe, MI	N 6384.1' E 4312.0'	580.9 ft (NAVD 88)	75.5 (feet)

SURFACE CONDITIONS	COORDINATE SYSTEM	DATE START	DATE FINISHED
Level gravel parking	Plant	06/13/07	08/01/07

LOGGED BY	CHECKED BY	APPROVED BY
Grainger/Ang/Bonnie TB	Dogbey/Bonnie TB	Meyer

SAMPLING: SAMPLE TYPE	SAMPLE NUMBER	SET 6 INCHES	2ND 6 INCHES	3RD 6 INCHES	N VALUE	SAMPLE RECOVERY	CORING: CORE SIZE	RUN NUMBER	RUN LENGTH	RUN RECOVERY	RQD RECOVERY	PERCENT RECOVERY	RQD	DEPTH (FEET)	SAMPLE TYPE	ELEVATION (FEET)	GRAPHIC LOG	CLASSIFICATION OF MATERIALS	REMARKS
														75				30°,J,T,No,No,Pl,SR @ 73.6-75.7' shale parting - 10°,B,VN,Pl,SR @ 73.8' 40°,J,VN,No,No,Ir,R @ 75.0'	Bottom of boring @ 75.5'. Water level @ 17.2' @ completion of drilling. Backfilled w/ cement - bentonite grout to 46' bgs on 08/13/07. Continued w/ bentonite chips to 1.5' bgs then gravel to surface on 08/21/07.
														76		505			
														77		504			
														78		503			
														79		502			
														80		501			
														81		500			
														82		499			
														83		498			
														84		497			
														85		496			
														86		495			
														87		494			
														88		493			
														89		492			
														90		491			

BLACK & VEATCH

BORING LOG

BORING NO. RW-C3

CLIENT	PROJECT	PROJECT NO.
Detroit Edison	Fermi 3 COL Application	147483

PROJECT LOCATION	COORDINATES	GROUND ELEVATION (DATUM)	TOTAL DEPTH
Monroe, MI	N 6291.9' E 4177.5'	580.4 ft (NAVD 88)	105.5 (feet)

SURFACE CONDITIONS	COORDINATE SYSTEM	DATE START	DATE FINISHED
Gravel parking area	Plant	06/13/07	07/31/07

LOGGED BY	CHECKED BY	APPROVED BY
Grainger/Ang/Bonnie	Dogbey/Bonnie	Meyer

SAMPLING: SAMPLE TYPE	SAMPLE NUMBER	SET 6 INCHES	2ND 6 INCHES	3RD 6 INCHES	N VALUE	SAMPLE RECOVERY	CORING: CORE SIZE	RUN NUMBER	RUN LENGTH	RUN RECOVERY	RQD RECOVERY	PERCENT RECOVERY	RQD	DEPTH (FEET)	SAMPLE TYPE	ELEVATION (FEET)	GRAPHIC LOG	CLASSIFICATION OF MATERIALS	REMARKS
														0		580		Poorly graded GRAVEL with Sand (GP) - About 80% fine to coarse, angular, hard gravel w/max. size 1½"; about 15% fine to coarse, angular, hard sand; about 5% fines; dark grayish brown; moist; strong reaction w/HCl; homogeneous; (Fill).	Boring advanced w/vacuum excavation.
														1		579			
														1.0				Well graded GRAVEL with Sand (GW) - About 80% fine to coarse, angular, hard gravel w/max. size 2"; about 15% fine to coarse, angular, hard sand; about 5% fines; dark grayish brown; moist; strong reaction w/HCl; homogeneous; (Fill).	
														2		578			
														3		577			
														4		576			
														5					
										5.1				5.1					
S	1					NR								6		575		Poorly graded GRAVEL with Sand and Cobbles (GP) - About 75% fine to coarse, subangular & subrounded gravel w/max. size 3", fractured w/2 hammer blows; about 20% fine to coarse, subangular sand; about 5% fines; grayish brown; dry; original field sample had about 15% by volume cobbles; (Fill).	Discrete sample S1A collected @ 5.1-5.5'. Below 5.1' continued w/4" ID sonic continuous sampler w/ nominal 6" temporary steel casing advanced w/sampler.
														7		574			
														8		573			
														9		572			
														10		571			
										10.0				10.0				Lean CLAY (CL) - About 100% medium plasticity, medium toughness, slow dilatancy fines; olive brown; very soft to firm; wet to moist; (Lacustrine Deposit).	PP = 0.0-1.0 TSF @ 10.0-12.0'.
														11		570			
														12		569			
S	2					4.0								13		568			PP = 1.0-2.0 TSF @ 12.0-12.5'.
														14		567			Discrete sample S2A collected @ 13.0-13.5'.
														15		566			Discrete sample S2B collected @

BLACK & VEATCH

BORING LOG

BORING NO. RW-C3

CLIENT	PROJECT	PROJECT NO.
Detroit Edison	Fermi 3 COL Application	147483

PROJECT LOCATION	COORDINATES	GROUND ELEVATION (DATUM)	TOTAL DEPTH
Monroe, MI	N 6291.9' E 4177.5'	580.4 ft (NAVD 88)	105.5 (feet)

SURFACE CONDITIONS	COORDINATE SYSTEM	DATE START	DATE FINISHED
Gravel parking area	Plant	06/13/07	07/31/07

LOGGED BY	CHECKED BY	APPROVED BY
Grainger/Ang/Bonnie	Dogbey/Bonnie	Meyer

SAMPLING: SAMPLE TYPE	SAMPLE NUMBER	SET 6 INCHES	2ND 6 INCHES	3RD 6 INCHES	N VALUE	SAMPLE RECOVERY	CORING: CORE SIZE	RUN NUMBER	RUN LENGTH	RUN RECOVERY	RQD RECOVERY	PERCENT RECOVERY	RQD	DEPTH (FEET)	ELEVATION (FEET)	CLASSIFICATION OF MATERIALS	REMARKS
														15	565	Gravelly Lean CLAY (CL) - About 60% medium plasticity, medium toughness, no dilatancy fines; about 30% fine to coarse, subangular gravel w/max. size 1", fractured w/2 hammer blows; about 10% fine to coarse, subangular to subrounded sand; light olive brown; soft; moist; (Lacustrine Deposit).	14.5-15.0'. Below 15.0' continued w/ NWJ rods & 4½" tricone bit using bentonite mud as drilling fluid.
TW	3					0.6								16	564		
														17	563	15.0	
														18	562	Lean CLAY (CL) - About 100% medium plasticity, medium toughness, no dilatancy fines; brown; firm; moist; homogeneous; (Glacial Till). 17.2	SPT performed w/D-50 automatic hammer. PP = 3.0 TSF @ 18.0'.
SPT	4	3	5	9	14	1.6								19	561		
														20	560	Lean CLAY (CL) - About 95% medium plasticity, medium toughness, no dilatancy fines; about 5% fine, subrounded, hard gravel w/max. size 5/8"; dark gray; hard; moist; (Glacial Till). 19.5	
TW	5					1.3								21	559		
														22	558		PP > 4.5 TSF @ 22.0'.
TW	6					0.8								23	557		
														24	556	Sandy Lean CLAY with Gravel (CL) - About 70% medium plasticity, medium toughness, no dilatancy fines; about 15% fine to coarse, subrounded sand; about 15% fine to coarse, subrounded, hard gravel w/ max. size 1¼"; dark gray; hard; moist; (Glacial Till). 24.3	
SPT	7	14	17	20	57	1.6								25	555		
														26	554		PP > 4.5 TSF @ 26.0'.
														27	553	Clayey GRAVEL with Sand (GC) - About 65% fine to coarse, subangular and subrounded; hard gravel w/ max. size 2¼"; about 20% fine to coarse, subangular to subrounded sand; about 15% fines; grayish brown; very dense; moist 27.0	Hard drilling @ 27.5'.
SPT	8	16	22	30	52	1.4								28	552		
														29	551		
			29.5											30		DOLOMITE; crystalline; grayish brown; micritic; fresh; 29.5	Auger refusal @ 29.5'.

BLACK & VEATCH

BORING LOG

BORING NO. RW-C3

CLIENT	PROJECT	PROJECT NO.
Detroit Edison	Fermi 3 COL Application	147483

PROJECT LOCATION	COORDINATES	GROUND ELEVATION (DATUM)	TOTAL DEPTH
Monroe, MI	N 6291.9' E 4177.5'	580.4 ft (NAVD 88)	105.5 (feet)

SURFACE CONDITIONS	COORDINATE SYSTEM	DATE START	DATE FINISHED
Gravel parking area	Plant	06/13/07	07/31/07

LOGGED BY	CHECKED BY	APPROVED BY
Grainger/Ang/Bonnie	Dogbey/Bonnie	Meyer

SAMPLING: SAMPLE TYPE	SAMPLE NUMBER	SET 6 INCHES	2ND 6 INCHES	3RD 6 INCHES	N VALUE	SAMPLE RECOVERY	CORING: CORE SIZE	RUN NUMBER	RUN LENGTH	RUN RECOVERY	RQD RECOVERY	PERCENT RECOVERY	RQD	DEPTH (FEET)	ELEVATION (FEET)	CLASSIFICATION OF MATERIALS	REMARKS
														30	550	strong; hard; (Bass Islands Group).	Top of rock @ 29.5'. Below 29.5' advanced w/4" ID sonic continuous sampler w/ nominal 6" temporary steel casing advanced w/sampler. Sonic core box S1 begins @ 29.5'.
														31	549		
														32	548		
														33	547		
														34	546		
														35	545		
S	9												6			35.5	
														36	544	DOLOMITE; light brownish gray & dark gray; mottled; micritic; fresh; strong; hard; (Bass Islands Group).	
														37	543		Driller reported soft material @ 36.9-40.9'.
														38	542		
														39	541		
														40	540		
																grades w/stylolites @ 40.5'	
			40.9											41	539	40.9	
HQ	1	4.2	4.2	0.9	100	21								42	538	DOLOMITE; argillaceous; grayish brown; micritic; fresh; strong; hard; (Bass Islands Group). calcite vugs @ 41.0' 90°,J,T,No,No,WA,SR @ 41.2-41.3' shale partings - 0°,B,VN,WA,SR @ 41.2', 41.3', 41.6', 41.85', 42.05' pitted fossils @ 41.5-41.8'	Hole open to 40.9'. Set nominal 6" temporary steel casing to 40.6'. Below 40.9' advanced w/ triple tube wire line core barrel w/diamond bit using water as drilling fluid. Core box #1 starts @ 40.9'.
														43	537	42.1	
														44	536	DOLOMITE; grayish brown; micritic; fresh; strong; hard; (Bass Islands Group). shale partings - 0°,B,VN,WA,SR @ 42.3', 42.4', 42.55', 42.7', 42.8', 43.0', 43.1', 43.5', 44.3', 44.5', 45.0' grades gray to dark gray @ 42.5' 90°,J,T,No,No,Pl,SR @ 42.8-43.0' (on edge of core)	
														45			

BLACK & VEATCH

BORING LOG

BORING NO. RW-C3

CLIENT	PROJECT	PROJECT NO.
Detroit Edison	Fermi 3 COL Application	147483

PROJECT LOCATION	COORDINATES	GROUND ELEVATION (DATUM)	TOTAL DEPTH
Monroe, MI	N 6291.9' E 4177.5'	580.4 ft (NAVD 88)	105.5 (feet)

SURFACE CONDITIONS	COORDINATE SYSTEM	DATE START	DATE FINISHED
Gravel parking area	Plant	06/13/07	07/31/07

LOGGED BY	CHECKED BY	APPROVED BY
Grainger/Ang/Bonnie TB	Dogbey/Bonnie TB	Meyer

SAMPLING: SAMPLE TYPE	SAMPLE NUMBER	SET 6 INCHES	2ND 6 INCHES	3RD 6 INCHES	N VALUE	SAMPLE RECOVERY

CORING: CORE SIZE	RUN NUMBER	RUN LENGTH	RUN RECOVERY	RQD RECOVERY	PERCENT RECOVERY	RQD
HQ	2	5.0	5.0	1.5	100	30
HQ	3	5.0	5.0	3.3	100	66
HQ	4	5.0	5.0	2.1	100	42

DEPTH (FEET)	SAMPLE TYPE	ELEVATION (FEET)	GRAPHIC LOG	CLASSIFICATION OF MATERIALS	REMARKS
45		535		90°,J,T,No,No,Pl,SR @ 43.0-43.1', 42.6-46.7' shale parting - 10°,B,VN,WA,SR @ 44.2' 90°,J,T,No,No,Pl,SR @ 44.5-44.6' 90°,J,T,No,No,Pl,SR @ 44.6-44.9' 40°,J,T,No,No,Pl,SR @ 44.6-44.7' fractured @ 44.7-45.0' 30°,J,T,No,No,Pl,SR @ 45.4-45.5' 90°,J,T,No,No,Pl,SR @ 45.5-45.9', 46.9-47.4', 47.4-47.6' 70°,J,T,No,No,Pl,SR @ 45.5-45.8' shale partings - 0°,B,VN,Pl,SR @ 46.3', 46.6', 46.9', 47.35' 45°,J,T,No,No,Pl,SR @ 47.1-47.7' shale partings - 0°,B,VN,Pl,SR @ 47.9', 48.2', 48.6' shale parting - 10°,B,VN,WA,SR @ 48.2' shale partings - 0°,B,VN,Pl,SR @ 49.0', 49.1', 49.5', 49.7', 49.9' fractured @ 49.1-49.5' 60°,J,T,No,No,Pl,SR @ 49.2-49.4' 90°,J,T,No,No,Pl,SR @ 49.7-49.85' fractured @ 49.7-49.9' 0°,J,T,No,No,Pl,SR @ 50.45' shale parting - 0°,B,VN,Pl,SR @ 50.8' shale partings - 20°,B,VN @ 50.9', 50.95'	
46		534			
47		533			
48		532			
49		531			
50		530			
51		529			
52		528		51.7 DOLOMITE; gray & dark gray, mottled; micritic; fresh; strong; hard; (Bass Islands Group). w/stylolites @ 52.35-52.5'	
53		527		52.7 DOLOMITE; argillaceous; dark grayish brown; micritic; fresh; strong; hard; banded; w/stylolites; (Bass Islands Group).	
54		526		54.4 DOLOMITE; crystalline; grayish brown; micritic; fresh; strong; hard; pitted; w/stylolites; (Bass Islands Group). pitted fossils @ 55.2-56.0' 0°,J,T,No,No,WA,SR @ 55.6' - fossils in joint	
55		525			
56		524		weathered shale @ 56.1-56.3' shale partings - 0°,B,VN,Pl,SR @ 56.5', 56.9', 58.0', 58.3' 90°,J,T,No,No,Pl,R @ 56.6-56.95' 80°,J,T,No,No,WA,SR @ 57.2-57.6' pitted fossils @ 57.3-57.9'	
57		523			
58		522		anhydrite crystals @ 58.0-58.3' 50°,J,VN,No,No,Pl,SR @ 58.1-58.3' grades dark grayish brown @ 58.3'	Core box #2 starts @ 58.4'.
59		521		shale parting - 0°,B,VN,Pl,SR @ 59.4' fractured @ 59.6-59.7'	
60					

BLACK & VEATCH

BORING LOG

BORING NO. RW-C3

CLIENT	PROJECT	PROJECT NO.
Detroit Edison	Fermi 3 COL Application	147483

PROJECT LOCATION	COORDINATES	GROUND ELEVATION (DATUM)	TOTAL DEPTH
Monroe, MI	N 6291.9' E 4177.5'	580.4 ft (NAVD 88)	105.5 (feet)

SURFACE CONDITIONS	COORDINATE SYSTEM	DATE START	DATE FINISHED
Gravel parking area	Plant	06/13/07	07/31/07

LOGGED BY	CHECKED BY	APPROVED BY
Grainger/Ang/Bonnie	Dogbey/Bonnie	Meyer

SAMPLING: SAMPLE TYPE	SAMPLE NUMBER	SET 6 INCHES	2ND 6 INCHES	3RD 6 INCHES	N VALUE	SAMPLE RECOVERY

CORING: CORE SIZE	RUN NUMBER	RUN LENGTH	RUN RECOVERY	RQD RECOVERY	PERCENT RECOVERY	RQD
HQ	5	5.0	4.2	0.9	84	18
HQ	6	5.0	5.0	4.1	100	82
HQ	7	5.0	4.9	2.2	98	44

DEPTH (FEET)	ELEVATION (FEET)	CLASSIFICATION OF MATERIALS	REMARKS
60	520	60.1 shale parting - 0°,B,VN,Ir,R @ 59.9'	
		60.5 DOLOMITE; light yellowish brown; micritic; fresh; strong; hard; w/anhydrite and stylolites; (Bass Islands Group).	
61	519		
62	518	brecciated; healed @ 62.1-62.4' 90°,J,VN,No,No,Ir,R @ 62.4-63.2'	
63	517	0°,J,N,No,No,Ir,R @ 63.5', 63.8', 63.9'	
64	516	anhydrite filled void, crystalline @ 63.9-64.1' 30°,J,T,No,No,Pl,Sr @ 64.3-64.4'	
65	515	65.1 shale partings - 0°,B,T,Pl,SR @ 65.2', 65.3', 65.6', 65.7', 66.1', 66.3'	
66	514	60°,J,T,No,No,Pl,SR @ 65.5-65.6' 0°,B,T,No,No,Pl,SR @ 65.5', 66.2', 66.6' 90°,J,T,No,No,Pl,SR @ 66.3-66.4' shale band; very dark gray @ 66.4-66.45'	
67	513	66.8 DOLOMITE; oolitic; light brownish gray; very fine grained; fresh; strong; hard; (Bass Islands Group). 0°,J,VN,No,No,Ir,SR @ 67.6'	Core box #3 starts @ 67.0'.
68	512	0°,B,T,No,No,Pl,SR @ 68.4'	
69	511	gray @ 69.5-69.55'	
70	510	70.1 70.2 DOLOMITE; argillaceous; gray & dark gray, banded; micritic; fresh; strong; hard; w/shale parting; (Bass Islands Group). shale partings - 0°,B,VN,Pl,SR @ 70.5', 71.0', 72.4' convoluted bedding @ 71.2-72.2' shale partings - 10°,J,VN,Pl,R @ 71.4', 71.6', 71.8', 72.0', 72.2'	
71	509		
72	508		
73	507	72.7 DOLOMITE; argillaceous; olive gray; micritic; fresh; strong; hard; banded; (Bass Islands Group). shale partings - 0°,B,VN,Pl,SR @ 72.9', 73.6', 74.1', 74.2'	
74	506	90°,J,T,No,No,Pl,SR @ 74.3-74.5', 74.5-74.7'	
75		shale parting - 0°,B,VN,Pl,SR @ 74.8'	

BLACK & VEATCH

BORING LOG

BORING NO. RW-C3

CLIENT	PROJECT	PROJECT NO.
Detroit Edison	Fermi 3 COL Application	147483

PROJECT LOCATION	COORDINATES	GROUND ELEVATION (DATUM)	TOTAL DEPTH
Monroe, MI	N 6291.9' E 4177.5'	580.4 ft (NAVD 88)	105.5 (feet)

SURFACE CONDITIONS	COORDINATE SYSTEM	DATE START	DATE FINISHED
Gravel parking area	Plant	06/13/07	07/31/07

LOGGED BY	CHECKED BY	APPROVED BY
Granger/Ang/Bonnie TB	Dogbey/Bonnie TB	Meyer EM

SAMPLING: SAMPLE TYPE	SAMPLE NUMBER	SET 6 INCHES	2ND 6 INCHES	3RD 6 INCHES	N VALUE	SAMPLE RECOVERY

CORING: CORE SIZE	RUN NUMBER	RUN LENGTH	RUN RECOVERY	RQD RECOVERY	PERCENT RECOVERY	RQD
HQ	8	5.0	3.5	1.1	70	22
HQ	9	5.0	5.0	3.4	100	68
HQ	10	5.0	4.9	4.3	98	86

DEPTH (FEET)	ELEVATION (FEET)	CLASSIFICATION OF MATERIALS	REMARKS
75	505		
76	504	0°,B,VN,No,No,Pl,SR @ 76.6', 76.7'	
77	503	0°,B,N,Cl,Fi,Pl,SR @ 77.1' shale partings - 0°,B,VN,Pl,Sr @ 77.5', 79.1' fractured @ 77.7-79.0'	
78	502	grades w/stylolites @ 78.5'	No drilling fluid return @ 78.0'.
79	501		
80	500	0°,J,VN,Cl,Sp,Pl,R @ 80.3'	30% drilling fluid return @ 80.1'.
81	499	clay @ 80.95-81.1' shale parting - 0°,B,VN,Pl,SR @ 80.95'	
82	498	0°,B,T,No,No,Pl,SR @ 81.8', 82.8', 84.1'	Core box #4 begins @ 81.7'.
83	497		
84	496	50°,J,T,No,No,Ir,R @ 83.8-84.0' fractured @ 84.0-84.5' 80°,J,T,No,No,Ir,R @ 84.5-84.8'	
85	495		
86	494	0°,B,VN,No,No,Pl,Sp @ 86.3'	
87	493		
88	492	shale parting - 0°,B,VN,Ir,SR @ 87.7' 10°,J,VN,No,No,Pl,SR @ 88.0'	
89	491	shale parting @ 88.5'	
90		convoluted bedding @ 89.5-89.7'	

BLACK & VEATCH

BORING LOG

BORING NO. RW-C3

CLIENT	PROJECT	PROJECT NO.
Detroit Edison	Fermi 3 COL Application	147483

PROJECT LOCATION	COORDINATES	GROUND ELEVATION (DATUM)	TOTAL DEPTH
Monroe, MI	N 6291.9' E 4177.5'	580.4 ft (NAVD 88)	105.5 (feet)

SURFACE CONDITIONS	COORDINATE SYSTEM	DATE START	DATE FINISHED
Gravel parking area	Plant	06/13/07	07/31/07

LOGGED BY	CHECKED BY	APPROVED BY
Grainger/Ang/Bonnie	Dogbey/Bonnie	Meyer

SAMPLING: SAMPLE TYPE	SAMPLE NUMBER	SET 6 INCHES	2ND 6 INCHES	3RD 6 INCHES	N VALUE	SAMPLE RECOVERY	CORING: CORE SIZE	RUN NUMBER	RUN LENGTH	RUN RECOVERY	RQD RECOVERY	PERCENT RECOVERY	RQD	DEPTH (FEET)	SAMPLE TYPE	ELEVATION (FEET)	GRAPHIC LOG	CLASSIFICATION OF MATERIALS	REMARKS
										90.1				90		490		0°,B,VN,No,No,Pl,SR @ 89.8', 90.0'	
																		89.9 DOLOMITE; light brownish gray; micritic; fresh; strong; hard; (Bass Islands Group). fractured @ 90.6-90.8' 70°,J,VN,No,No,Pl,SR @ 91.1-91.3' fractured @ 91.2-91.7' 90°,J,T,No,No,Pl,SR @ 91.3-91.9'	
														91		489			
														92		488			
							HQ	11	5.0	4.5	1.9	90	38					shale partings - 70°,J,T,Pl,SR @ 92.5-92.6'	
														93		487		93.3 SHALE; very dark gray; micritic; slightly weathered; strong; hard; (Bass Islands Group).	
														94		486		93.7 DOLOMITE; light gray & dark gray, mottled; fresh; strong; hard; (Bass Islands Group). grading brecciated, healed; medium to fine grained @ 93.8'	
										95.1				95		485		93.9 DOLOMITE; light brownish gray; micritic; fresh; strong; hard; (Bass Islands Group). anhydrite crystals @ 94.1-94.3' 90°,J,T,No,No,Pl,SR @ 94.5-94.9'	90% drilling fluid loss @ 95.0'. Core box #5 starts @ 95.1'.
														96		484			
														97		483			
							HQ	12	5.0	2.3	.3	46	6					0°,B,T,No,No,Pl,SR @ 97.3' fractured @ 97.5-98.0'	
														98		482			
														99		481		shale parting @ 99.1' 90°,J,T,No,No,Pl,SR @ 99.2-99.9' 80°,J,T,No,No,Pl,SR @ 99.5' 0°,B,T,No,No,Ir,R @ 99.6'	
										100.1				100		480			No drilling fluid return @ 100.1'.
														101		479		10°,J,T,No,No,Pl,SR @ 100.4' shale parting - 0°,B,T,Pl,SR @ 100.5' 90°,J,T,No,No,Pl,SR @ 100.5-101.2' shale parting - 0°,B,T,Pl,SR @ 101.2'	
														102		478			
							HQ	13	5.4	5.4	NR	100	NR	103		477		shale parting - 10°,B,T,Pl,SR @ 102.8'	
														104		476		103.1 DOLOMITE; argillaceous; light brownish gray; micritic; fresh; strong; hard; w/shale partings and banding; (Bass Islands Group). shale partings - 0°,B,T,WA,SR @ 103.2', 103.5', 105.0' convoluted bedding @ 104.0-104.6'	
														105					

BLACK & VEATCH

BORING LOG

BORING NO. RW-C3

CLIENT	PROJECT	PROJECT NO.
Detroit Edison	Fermi 3 COL Application	147483

PROJECT LOCATION	COORDINATES	GROUND ELEVATION (DATUM)	TOTAL DEPTH
Monroe, MI	N 6291.9' E 4177.5'	580.4 ft (NAVD 88)	105.5 (feet)

SURFACE CONDITIONS	COORDINATE SYSTEM	DATE START	DATE FINISHED
Gravel parking area	Plant	06/13/07	07/31/07

LOGGED BY	CHECKED BY	APPROVED BY
Grainger/Ang/Bonnie TB	Dogbey/Bonnie TB	Meyer EM

SAMPLING							CORING									
SAMPLE TYPE	SAMPLE NUMBER	SET 6 INCHES	2ND 6 INCHES	3RD 6 INCHES	N VALUE	SAMPLE RECOVERY	CORE SIZE	RUN NUMBER	RUN LENGTH	RUN RECOVERY	RQD RECOVERY	PERCENT RECOVERY	RQD	DEPTH (FEET)	SAMPLE TYPE	ELEVATION (FEET)	GRAPHIC LOG	CLASSIFICATION OF MATERIALS	REMARKS
														105		475			Bottom of boring @ 105.5'. Water level @ 20.1' at completion of drilling. Boring caved @ 78.1'. Boring backfilled with bentonite chips from 78.1' to 1' bgs then gravel to surface on 08/21/07
														106		474			
														107		473			
														108		472			
														109		471			
														110		470			
														111		469			
														112		468			
														113		467			
														114		466			
														115		465			
														116		464			
														117		463			
														118		462			
														119		461			
														120					

BLACK & VEATCH

BORING LOG

BORING NO. RW-C4

SHEET 1 OF 10

CLIENT	PROJECT	PROJECT NO.
Detroit Edison	Fermi 3 COL Application	147483

PROJECT LOCATION	COORDINATES	GROUND ELEVATION (DATUM)	TOTAL DEPTH
Monroe, MI	N 6291.9' E 4312.0'	580.2 ft (NAVD 88)	146.2 (feet)

SURFACE CONDITIONS	COORDINATE SYSTEM	DATE START	DATE FINISHED
Gravel parking lot	Plant	06/13/07	08/14/07

LOGGED BY	CHECKED BY	APPROVED BY
TJB Bonnie/Ang	Dogbey/Bonnie TJB	Meyer

SAMPLING							CORING									
SAMPLE TYPE	SAMPLE NUMBER	SET 6 INCHES	2ND 6 INCHES	3RD 6 INCHES	N VALUE	SAMPLE RECOVERY	CORE SIZE	RUN NUMBER	RUN LENGTH	RUN RECOVERY	RQD RECOVERY	PERCENT RECOVERY	RQD	DEPTH (FEET)	ELEVATION (FEET)	CLASSIFICATION OF MATERIALS	REMARKS
														0	580	Poorly graded GRAVEL (GP) - About 90% fine to coarse, angular to subangular, hard gravel w/max. size 2"; about 5% fine to coarse, angular to subangular sand; about 5% fines; dark reddish gray; dry; weak reaction w/HCl; (Fill).	Boring advanced w/vacuum excavation.
										4.6				5	575		Below 4.6' continued w/4" ID sonic continuous sampler w/ nominal 6" temporary steel casing advanced w/sampler.
S	1					NR								5.5		Poorly graded GRAVEL with Silt and Sand (GP-GM) - About 70% fine to coarse, subangular to subrounded gravel w/max. size 3", fractured w/2 hammer blows; about 20% fine to coarse, subangular to subrounded sand; about 10% fines; grayish brown; moist; (Fill).	
														10	570		Discrete sample S1A collected @ 10.0-11.0'
S	2					NR				11.0				11	569		
														13	567		
SPT	3	7	4	5	9	0.7				13.5				13.0		Lean CLAY (CL) - About 100% medium plasticity, medium toughness, no dilatancy fines; olive brown; firm; moist; (Lacustrine Deposit).	Below 13.5' continued w/ NWJ rods & 4½" tricone bit using bentonite mud
														14	566		
														15			

5/8/2008 6:34 PM DTE - Fermi 3 Geotech

BLACK & VEATCH

BORING LOG

BORING NO. RW-C4

CLIENT	PROJECT	PROJECT NO.
Detroit Edison	Fermi 3 COL Application	147483

PROJECT LOCATION	COORDINATES	GROUND ELEVATION (DATUM)	TOTAL DEPTH
Monroe, MI	N 6291.9' E 4312.0'	580.2 ft (NAVD 88)	146.2 (feet)

SURFACE CONDITIONS	COORDINATE SYSTEM	DATE START	DATE FINISHED
Gravel parking lot	Plant	06/13/07	08/14/07

LOGGED BY	CHECKED BY	APPROVED BY
Bonnie/Ang	Dogbey/Bonnie	Meyer

SAMPLING							CORING										
SAMPLE TYPE	SAMPLE NUMBER	SET 6 INCHES	2ND 6 INCHES	3RD 6 INCHES	N VALUE	SAMPLE RECOVERY	CORE SIZE	RUN NUMBER	RUN LENGTH	RUN RECOVERY	RQD RECOVERY	PERCENT RECOVERY	RQD	DEPTH (FEET)	SAMPLE TYPE	ELEVATION (FEET)	GRAPHIC LOG
														15		565	
														16		564	
TW	4												1.2	17		563	
														18		562	
TW	5												1.9	19		561	
														20		560	
														21		559	
TW	6												1.8	22		558	
														23		557	
TW	7												0.7	24		556	
														25		555	
														26		554	
SPT	8	7	12	13	25	1.4								27		553	
														28		552	
SPT	9	17	16	20	36	1.2								29		551	
														30			

CLASSIFICATION OF MATERIALS	REMARKS
	as drilling fluid. SPT performed w/D-50 automatic hammer.
16.0 — Lean CLAY (CL) - About 100% medium plasticity, medium toughness, no dilatancy fines; brown; firm; w/trace fine gravel (Glacial Till).	
grades hard; w/trace fine to coarse sand & fine to coarse gravel w/max. size ¾"	PP = 3.25 to 4.0 TSF @ 18.0'.
20.5 — Lean CLAY with Sand (CL) - About 80% medium plasticity, medium toughness, no dilatancy fines; about 10% fine to coarse, subangular, hard gravel w/max. size ¾"; about 10% fine to coarse, subangular sand; dark gray; hard; moist; (Glacial Till).	PP > 4.5 TSF @ 20.5'.
	PP > 4.5 TSF @ 23.0'.
25.7 — Lean CLAY with Gravel (CL) - About 75% medium plasticity, medium toughness, no dilatancy fines; about 15% fine to coarse, subangular, hard gravel w/max. size 1.5"; about 10% fine to coarse, subangular & subrounded sand; dark gray; hard; moist; (Glacial Till).	
28.0 — Gravelly Lean CLAY with Sand (CL) - About 60% medium plasticity, medium toughness, no dilatancy fines; about 25% fine to coarse, subangular to subrounded gravel w/max. size 1¾", fractured w/2 hammer blows; about 15% fine to coarse, subangular to subrounded sand; dark gray; hard; moist; (Glacial	

BLACK & VEATCH

BORING LOG

BORING NO. RW-C4

CLIENT	PROJECT	PROJECT NO.
Detroit Edison	Fermi 3 COL Application	147483

PROJECT LOCATION	COORDINATES	GROUND ELEVATION (DATUM)	TOTAL DEPTH
Monroe, MI	N 6291.9' E 4312.0'	580.2 ft (NAVD 88)	146.2 (feet)

SURFACE CONDITIONS	COORDINATE SYSTEM	DATE START	DATE FINISHED
Gravel parking lot	Plant	06/13/07	08/14/07

LOGGED BY	CHECKED BY	APPROVED BY
TB ECA Bonnie/Ang	Dogbey/Bonnie TB	Meyer

SAMPLING							CORING									
SAMPLE TYPE	SAMPLE NUMBER	SET 6 INCHES	2ND 6 INCHES	3RD 6 INCHES	N VALUE	SAMPLE RECOVERY	CORE SIZE	RUN NUMBER	RUN LENGTH	RUN RECOVERY	RQD RECOVERY	PERCENT RECOVERY	RQD	DEPTH (FEET)	SAMPLE TYPE	ELEVATION (FEET)	GRAPHIC LOG	CLASSIFICATION OF MATERIALS	REMARKS
														30		550		Till).	
																		30.5	
SPT	10	22	14	14	28	1.0								31		549		Poorly graded GRAVEL with Clay and Sand (GP-GC) - About 75% fine to coarse, subangular, hard gravel w/max. size 1½"; about 15% medium to coarse, subangular to subrounded sand; about 10% fines; grayish brown; medium dense; wet; (Weathered Rock).	
														32		548			
			32.5															32.5	
S	11					3.0								33		547		DOLOMITE; crystalline; gray; micritic; fresh; strong; hard; (Bass Islands Group).	Below 32.5' continued w/4" ID sonic continuous sampler w/ nominal 6" temporary steel casing advanced w/sampler. Sonic Core S-11 & S-12 stored in box labeled SC1.
														34		546			
														35		545			
			35.5																
S	12					5.0								36		544			
														37		543			
														38		542			
														39		541			
														40		540			
			40.5															40.5	
HQ	1	3.2	1.9	1.3	59	41								41		539		BRECCIA; poorly indurated to indurated dolomite matrix; gray; micritic; fresh; strong; hard; w/dolomite clasts; light gray; micritic; fresh; strong; hard; (Bass Islands Group).	Set nominal 6" temporary steel casing to 40.6'. Below 40.5' continued w/ triple tube wire line core barrel w/diamond bit using water as drilling fluid. Water level @ 16.0' prior to drilling on 08/12/07.
														42		538		fractured @ 42.3-42.7'	
														43		537			
			43.7											44		536		slightly fractured @ 43.7-44.4' 90°,J,T,No,No,Pl,SR @ 43.7-48.7' 0°,B,T,No,No,Pl,SR @ 43.9' 10°,J,T,No,No,Pl,SR @ 44.2-44.3'	
														45				44.3	

BLACK & VEATCH

BORING LOG

BORING NO. RW-C4

CLIENT	PROJECT	PROJECT NO.
Detroit Edison	Fermi 3 COL Application	147483

PROJECT LOCATION	COORDINATES	GROUND ELEVATION (DATUM)	TOTAL DEPTH
Monroe, MI	N 6291.9' E 4312.0'	580.2 ft (NAVD 88)	146.2 (feet)

SURFACE CONDITIONS	COORDINATE SYSTEM	DATE START	DATE FINISHED
Gravel parking lot	Plant	06/13/07	08/14/07

LOGGED BY	CHECKED BY	APPROVED BY
Bonnie/Ang TB ECA	Dogbey/Bonnie TB	Meyer

SAMPLING: SAMPLE TYPE	SAMPLE NUMBER	SET 6 INCHES	2ND 6 INCHES	3RD 6 INCHES	N VALUE	SAMPLE RECOVERY	CORING: CORE SIZE	RUN NUMBER	RUN LENGTH	RUN RECOVERY	RQD RECOVERY	PERCENT RECOVERY	RQD	DEPTH (FEET)	SAMPLE TYPE	ELEVATION (FEET)	GRAPHIC LOG	CLASSIFICATION OF MATERIALS	REMARKS
HQ	2	5.0	5.0	0.0	100	0								45		535		DOLOMITE; grayish brown; micritic; fresh; strong; hard; banded; (Bass Islands Group). fractured @ 44.4-45.3' 0°,B,T,No,No,Pl,SR @ 45.3', 46.3', 46.5', 46.7'	
														46		534			
														47		533		0°,B,T,No,No,Pl,SR @ 47.0', 47.4'	
																		0°,B,T,No,No,Pl,SR @ 47.6', 47.8'	
														48		532		20°,J,T,No,No,Pl,SR @ 48.15-48.2'	
			48.7															fractured @ 48.7-50.6'	
														49		531			
														50		530			
																		80°,J,T,No,No,Pl,SR @ 50.6-50.8'	
HQ	3	5.0	4.3	0.0	86	0								51		529		30°,J,T,No,No,Pl,SR @ 50.8-51.0' fractured @ 51.2-51.8'	
														52		528		90°,J,T,No,No,Pl,SR @ 51.8-53.7' (2 Joints) 80°,J,T,No,No,Pl,SR @ 51.8-52.4' grades light gray @ 51.8' shale partings - 0°,B,VN,Pl,SR @ 52.1', 52.6'	
														53		527		shale partings - 0°,B,VN,Pl,SR @ 53.0', 53.4' 70°,J,T,No,No,Pl,SR @ 53.4-53.7'	
			53.7															54.1	
														54		526		DOLOMITE; very dark grayish brown; micritic; fresh; strong; hard; (Bass Islands Group). shale partings - 0°,B,T,Pl,SR @ 54.2', 54.6', 55.2', 55.4', 55.7', 56.65', 57.6'	
														55		525		90°,J,T,No,No,Pl,SR @ 54.3-55.2'	Core box #2 starts @ 55.2'.
HQ	4	5.0	5.0	3.8	100	76								56		524			
														57		523			
														58		522		0°,B,T,No,No,Pl,SR @ 58.15', 58.25' 40°,J,VN,No,No,Pl,SR @ 58.15-58.25' fossils @ 58.15-58.25'	
			58.7											59		521			
														60					

BLACK & VEATCH

BORING LOG

BORING NO. RW-C4

CLIENT	PROJECT	PROJECT NO.
Detroit Edison	Fermi 3 COL Application	147483

PROJECT LOCATION	COORDINATES	GROUND ELEVATION (DATUM)	TOTAL DEPTH
Monroe, MI	N 6291.9' E 4312.0'	580.2 ft (NAVD 88)	146.2 (feet)

SURFACE CONDITIONS	COORDINATE SYSTEM	DATE START	DATE FINISHED
Gravel parking lot	Plant	06/13/07	08/14/07

LOGGED BY	CHECKED BY	APPROVED BY
TB Bonnie/Ang EJA	Dogbey/Bonnie TB	Meyer

SAMPLING							CORING										CLASSIFICATION OF MATERIALS	REMARKS
SAMPLE TYPE	SAMPLE NUMBER	SET 6 INCHES	2ND 6 INCHES	3RD 6 INCHES	N VALUE	SAMPLE RECOVERY	CORE SIZE	RUN NUMBER	RUN LENGTH	RUN RECOVERY	RQD RECOVERY	PERCENT RECOVERY	RQD	DEPTH (FEET)	SAMPLE TYPE	ELEVATION (FEET)	GRAPHIC LOG	
							HQ	5	5.0	2.8	0.6	56	12	60		520		70°,J,T,No,No,Pl,SR @ 59.9-60.1' (2 Joints), 61.9' 0°,B,T,No,No,Pl,SR @ 59.9', 60.1', 62.0' fractured @ 60.1-60.5' 80°,J,T,No,No,Pl,SR @ 60.5-60.8'	
														61		519		
														62		518		fractured @ 62.0-62.7' 90°,J,T,No,No,Pl,SR @ 62.4-62.5' anhydrite bed @ 62.5-63.0'
														63		517		63.0 DOLOMITE; grayish brown; micritic; fresh; strong; hard; (Bass Islands Group).
										63.7				64		516		
							HQ	6	5.0	5.0	2.4	100	48	65		515		0°,B,T,No,No,Pl,SR @ 64.85' 65.1 DOLOMITE; light gray & dark gray, mottled; micritic; fresh; strong; hard; (Bass Islands Group). shale parting - 0°,B,VN,Pl,SR @ 65.3'
														66		514		65.6 DOLOMITE; oolitic; light grayish brown; very fine grained; fresh; strong; hard; (Bass Islands Group). 0°,B,T,No,No,Pl,SR @ 65.6' 90°,J,T,No,No,Pl,SR @ 65.6-66.1' 0°,B,T,No,No,Pl,SR @ 66.1' 60°,J,T,No,No,Pl,SR @ 66.9-67.4', 67.3-67.5'
														67		513		
										68.7				68		512		67.5 DOLOMITE; light gray; micritic; fresh; strong; hard; (Bass Islands Group). 0°,B,T,No,No,Pl,SR @ 68.0', 68.1', 68.4' mottled, light gray & dark gray @ 68.3-68.5'
							HQ	7	5.0	5.0	1.2	100	24	69		511		68.6 DOLOMITE; grayish brown; micritic; fresh; strong; hard; banded; (Bass Islands Group). 0°,B,T,No,No,Pl,SR @ 68.6', 68.7' 90°,J,T,No,No,Pl,SR @ 69.0-69.4', 71.2-71.6' 0°,B,VN,No,No,Pl,SR @ 69.0', 69.4', 69.8', 70.2', 70.3' dolomite; breccia, healed and convoluted bedding @ 69.4-70.2' shale partings - 0°,B,VN,Pl,SR @ 70.55',70.8',70.85', 71.6' 90°,J,T,No,No,Pl,SR 70.8-70.9' 90°,J,T,No,No,Pl,SR @ 71.18-71.2' shale partings - 0°,B,VN,Pl,SR @ 72.05',72.5',72.9'
														70		510		
														71		509		Core box #3 starts @ 70.8'.
														72		508		
														73		507		50°,J,T,No,No,Pl,SR @ 73.2-73.3' 90°,J,T,No,No,Pl,SR @ 73.4-73.7'
										73.7				74		506		73.5 DOLOMITE; grayish brown; micritic; fresh; strong; hard; (Bass Islands Group). 55°,J,T,No,No,Pl,SR @ 73.8-74.0' fractured @ 73.9-74.5'
														75				

BLACK & VEATCH

BORING LOG

BORING NO. RW-C4

SHEET 6 OF 10

CLIENT	PROJECT	PROJECT NO.
Detroit Edison	Fermi 3 COL Application	147483

PROJECT LOCATION	COORDINATES	GROUND ELEVATION (DATUM)	TOTAL DEPTH
Monroe, MI	N 6291.9' E 4312.0'	580.2 ft (NAVD 88)	146.2 (feet)

SURFACE CONDITIONS	COORDINATE SYSTEM	DATE START	DATE FINISHED
Gravel parking lot	Plant	06/13/07	08/14/07

LOGGED BY	CHECKED BY	APPROVED BY
TB Bonnie/Ang ECA	Dogbey/Bonnie TB	Meyer

SAMPLING							CORING									
SAMPLE TYPE	SAMPLE NUMBER	SET 6 INCHES	2ND 6 INCHES	3RD 6 INCHES	N VALUE	SAMPLE RECOVERY	CORE SIZE	RUN NUMBER	RUN LENGTH	RUN RECOVERY	RQD RECOVERY	PERCENT RECOVERY	RQD	DEPTH (FEET)	SAMPLE TYPE	ELEVATION (FEET)	GRAPHIC LOG	CLASSIFICATION OF MATERIALS	REMARKS
														75		505		0°,B,T,No,No,Pl,SR @ 74.5', 75.0'	
																		75.0	
							HQ	8	5.0	4.6	3.0	92	60	76		504		DOLOMITE; brecciated, healed; light brownish gray; micritic; fresh; strong; hard; w/clasts of dolomite; w/ stylolites & calcite & anhydrite healed joints; vuggy (5%); (Bass Islands Group). filled vug (no reaction w/HCl) @ 75.2' 30°,J,T,No,No,Pl,SR @ 75.3' 60°,J,T,No,No,Pl,SR @ 76.5', 76.7'	
														77		503		0°,J,T,No,No,Pl,SR @ 77.6'	
														78		502			
										78.7				79		501		0°,J,T,No,No,Ir,SR @ 78.95', 80.7', 82.0'	
							HQ	9	5.0	5.0	2.9	100	58	80		500			
														81		499			
														82		498		fractured @ 82.0-82.5'	
														83		497		30°,J,VN,No,No,WA,SR @ 82.5-83.0' 20°,J,VN,No,No,Ir,SR @ 82.7-82.9' 45°,J,VN,No,No,Pl,SR @ 83.1-83.25' fractured @ 83.3-83.6' 60°,J,T,No,No,Pl,SR @ 93.5-93.7' 90°,J,T,No,No,Pl,SR @ 83.7-84.0'	
										83.7				84		496		0°,J,T,No,No,Ir,SR @ 84.4-84.5'	Core box #4 starts @ 83.7'.
														85		495		shale parting @ 85.1'	
							HQ	10	5.0	5.0	3.7	100	74	86		494		70°,J,T,No,No,WA,SR @ 85.7-86.2'	
																		86.7	
														87		493		DOLOMITE; grayish brown; micritic; fresh; strong; hard; w/stylolites; (Bass Islands Group). 0°,B,T,No,No,Pl,SR @ 87.3', 87.7', 88.0', 88.35' 70°,J,T,No,No,Pl,SR @ 87.3-87.6'	
														88		492		88.4	
										88.7				89		491		DOLOMITE; light gray; micritic; fresh; strong; hard; banded; (Bass Islands Group). 0°,B,T,No,No,Pl,SR @ 89.2',89.4',89.5',89.8',90.2' 90°,J,T,No,No,Pl,SR @ 89.2-89.6', 89.9-90.2'	
														90					

5/8/2008 6:34 PM DTE - Fermi 3 Geotech

BLACK & VEATCH

BORING LOG

BORING NO. RW-C4

CLIENT	PROJECT	PROJECT NO.
Detroit Edison	Fermi 3 COL Application	147483

PROJECT LOCATION	COORDINATES	GROUND ELEVATION (DATUM)	TOTAL DEPTH
Monroe, MI	N 6291.9' E 4312.0'	580.2 ft (NAVD 88)	146.2 (feet)

SURFACE CONDITIONS	COORDINATE SYSTEM	DATE START	DATE FINISHED
Gravel parking lot	Plant	06/13/07	08/14/07

LOGGED BY	CHECKED BY	APPROVED BY
TB ECA Bonnie/Ang	TB & Dogbey/Bonnie	Meyer

SAMPLING							CORING									
SAMPLE TYPE	SAMPLE NUMBER	SET 6 INCHES	2ND 6 INCHES	3RD 6 INCHES	N VALUE	SAMPLE RECOVERY	CORE SIZE	RUN NUMBER	RUN LENGTH	RUN RECOVERY	RQD RECOVERY	PERCENT RECOVERY	RQD	DEPTH (FEET)	SAMPLE TYPE	ELEVATION (FEET)	GRAPHIC LOG	CLASSIFICATION OF MATERIALS	REMARKS
							HQ	11	5.0	4.4	0.5	88	10	90		490		70°,J,T,No,No,Pl,SR @ 90.2-90.8'	
														91		489		0°,B,T,No,No,Pl,SR @91.0', 91.4',91.7',91.8',92.0', 92.3'	
																		grades light gray @ 91.1'	
																		91.4	
														92		488		SHALE; black; (Bass Islands Group).	
																		91.8	
																		DOLOMITE; light gray; micritic; fresh; strong; hard; banded; (Bass Islands Group).	
														93		487		grades light brownish gray @ 91.9'	
																		70°,J,T,No,No,Pl,SR @ 92.5-92.8', 91.1-91.3'	
																		0°,B,T,No,No,Pl,SR @ 92.5',92.8'	
										93.7				94		486		10°,J,T,No,No,Pl,SR @ 93.95-94.05, 94.4-94.8', 95.05, 95.1'	
																		40°,J,T,No,No,Pl,SR @ 94.5-94.8'	
														95		485		fractured @ 94.5-94.8'	
																		10°,J,T,No,No,Pl,SR @ 95.5'	
							HQ	12	5.0	4.8	2.4	96	48	96		484		10°,J,T,No,No,Pl,SR @ 96.15'	
														97		483		fractured @ 97.3-97.5'	
														98		482		10°,J,T,No,No,Pl,SR @ 98.1'	
										98.7								90°,J,T,No,No,Pl,SR @ 98.7-98.9'	Core box #5 starts @ 98.7'.
														99		481		0°,B,T,No,No,Pl,SR @ 98.85'	
																		shale partings - 0°,B,VN,Pl,SR @ 99.4',100.9'	
														100		480		slightly brecciated, healed @ 100.1-100.6'	
																		anhydrite filled vug @ 100.7'	
							HQ	13	5.0	4.6	3.5	92	70	101		479		fractured @ 100.95-101.1'	
																		slightly brecciated, healed @ 101.2-101.4'	
																		shale partings - 0°,B,VN,Pl,SR @ 101.4',103.0', 103.1',103.2'	
														102		478		45°,J,VN,Cl,Sp,Pl,SR @ 102.2-102.3'	
																		80°,J,VN,No,No,Pl,SR @ 102.5-103.0'	
														103		477		90°,J,VN,No,No,Pl,SR @ 103.0-103.2'	
																		20°,J,VN,Cl,Sp,Pl,SR @ 103.3'	
										103.7								103.5	
														104		476		DOLOMITE; argillaceous; dark gray; micritic; fresh; strong; hard; (Bass Islands Group).	
														105					

BLACK & VEATCH

BORING LOG

BORING NO. RW-C4

CLIENT	PROJECT	PROJECT NO.
Detroit Edison	Fermi 3 COL Application	147483

PROJECT LOCATION	COORDINATES	GROUND ELEVATION (DATUM)	TOTAL DEPTH
Monroe, MI	N 6291.9' E 4312.0'	580.2 ft (NAVD 88)	146.2 (feet)

SURFACE CONDITIONS	COORDINATE SYSTEM	DATE START	DATE FINISHED
Gravel parking lot	Plant	06/13/07	08/14/07

LOGGED BY	CHECKED BY	APPROVED BY
TB ECA Bonnie/Ang	Dogbey/Bonnie TD	Meyer

SAMPLING							CORING							DEPTH (FEET)	SAMPLE TYPE	ELEVATION (FEET)	GRAPHIC LOG	CLASSIFICATION OF MATERIALS	REMARKS
SAMPLE TYPE	SAMPLE NUMBER	SET 6 INCHES	2ND 6 INCHES	3RD 6 INCHES	N VALUE	SAMPLE RECOVERY	CORE SIZE	RUN NUMBER	RUN LENGTH	RUN RECOVERY	RQD RECOVERY	PERCENT RECOVERY	RQD						
														105		475		0°,B,VN,No,No,Pl,SR @ 105.0'	
							HQ	14	5.0	4.9	2.8	98	56	106		474		0°,B,VN,No,No,Pl,SR @ 106.05', 106.4', 106.45'	
														107		473		0°,B,VN,No,No,Pl,SR @ 106.55', 106.6', 106.7', 106.8', 107.0', 107.4', 107.6', 107.8', 108.0' 90°,J,T,No,No,Pl,SR @ 106.8-106.9', 107.7-108.7' 70°,J,T,No,No,Pl,SR @ 107.05-107.5' light grayish brown @ 107.5-108.0'	
														108		472		65°,J,T,No,No,Pl,SR @ 108.0-108.3', 108.4-108.7'	Water level @ 20.7' prior to drilling on 08/14/07.
										108.7				109		471			
							HQ	15	5.0	3.5	1.5	70	30	110		470		90°,J,T,No,No,Pl,SR @ 109.7-109.8', 110.1-110.5', 110.7-110.9' slightly weathered shale partings - 0°,B,VN,Pl,SR @ 110.1',110.5', 110.7',110.9' 70°,J,T,No,No,Pl,SR @ 110.1-110.5',110.5-110.6', 112.4-112.7'	
														111		469		111.0 DOLOMITE; light grayish brown; micritic; fresh; strong; hard; w/stylolites; (Bass Islands Group). shale partings - 0°,B,VN,Pl,SR @ 111.55',111.95', 112.1',112.4', 112.7',112.9'	
														112		468		fractured @ 112.7-112.9'	
														113		467		75°,J,T,No,No,Pl,SR @ 113.1-113.7'	
										113.7				114		466			Core box #6 starts @ 113.7'.
							HQ	16	5.0	4.5	2.4	90	48	115		465		0°,B,VN,No,No,Pl,SR @ 114.6', 114.9', 115.9' 80°,J,T,No,No,Ir,SR @ 115.0-115.15' 10°,J,VN,Cl,Sp,Pl,SR @ 115.15' 50°,J,VN,No,No,Pl,SR @ 115.35-115.5' 60°,J,VN,No,No,Pl,SR @ 115.5-115.7' 10°,J,T,No,No,Pl,SR @ 116.05-116.15' 70°,J,T,No,No,Pl,SR @ 116.3-116.7'	
														116		464		116.7 DOLOMITE; brecciated, healed; light grayish brown; micritic; fresh; strong; hard; w/clasts of dolomite; (Bass Islands Group). 20°,J,VN,Cl,Sp,Pl,SR @ 116.7', 116.8' 10°,J,T,No,No,Pl,SR @ 117.4'	
														117		463			
														118		462		grades 5% vuggy @ 118.5'	
										118.7				119		461			
														120					

BLACK & VEATCH

BORING LOG

BORING NO. RW-C4

CLIENT	PROJECT	PROJECT NO.
Detroit Edison	Fermi 3 COL Application	147483

PROJECT LOCATION	COORDINATES		GROUND ELEVATION (DATUM)	TOTAL DEPTH
Monroe, MI	N 6291.9'	E 4312.0'	580.2 ft (NAVD 88)	146.2 (feet)

SURFACE CONDITIONS	COORDINATE SYSTEM	DATE START	DATE FINISHED
Gravel parking lot	Plant	06/13/07	08/14/07

LOGGED BY	CHECKED BY	APPROVED BY
TB Bonnie/Ang ECA	Dogbey/Bonnie TB	Meyer

SAMPLING

SAMPLE TYPE	SAMPLE NUMBER	SET 6 INCHES	2ND 6 INCHES	3RD 6 INCHES	N VALUE	SAMPLE RECOVERY

CORING

CORE SIZE	RUN NUMBER	RUN LENGTH	RUN RECOVERY	RQD RECOVERY	PERCENT RECOVERY	RQD
HQ	17	5.0	2.4	0.3	48	6
			123.7			
HQ	18	2.5	0.0	0.0	0	0
			126.2			
HQ	19	2.5	0.1	0.0	4	0
			128.7			
HQ	20	2.5	0.5	0.0	20	0
			131.2			
HQ	21	2.5	0.7	0.0	28	0
			133.7			

DEPTH (FEET): 120, 121, 122, 123, 124, 125, 126, 127, 128, 129, 130, 131, 132, 133, 134, 135

ELEVATION (FEET): 460, 459, 458, 457, 456, 455, 454, 453, 452, 451, 450, 449, 448, 447, 446

GRAPHIC LOG

CLASSIFICATION OF MATERIALS

90°,J,T,No,No,Pl,SR @ 120.0-120.7', 121.0-121.9'
0°,B,T,No,No,Pl,SR @ 120.2', 120.4', 120.6'
0°,B,VN,No,No,Pl,SR @ 120.45', 120.8', 120.9'

70°,J,T,Anhydrite,Sp,Pl,SR @ 121.1-121.25'
fractured @ 121.3-121.6'
0°,B,VN,No,No,Pl,SR @ 121.5'
stylolites & anhydrite partings @ 121.6'
0°,B,T,Ca,Pa,Pl,SR @ 121.8'

121.9

DOLOMITE; grayish brown; micritic; fresh; strong; hard; (Bass Islands Group).
fractured @ 122.0-122.2'
90°,J,T,No,No,Pl,SR @ 122.0-122.2'
anhydrite filled vug @ 122.2'
90°,J,T,UK,Sp,Pl,SR @ 122.9-123.1'

129.0

DOLOMITE; gray; micritic; fresh; strong; hard; (Salina Group - Unit F).
0°,B,T,No,No,Pl,SR @ 129.7', 129.85'
70°,J,T,No,No,Pl,SR @ 129.9-130.0'

130.0

DOLOMITE; argillaceous; light grayish brown; micritic; fresh; strong; hard; banded; (Salina Group - Unit F).
0°,B,T,No,No,Pl,SR @ 130.2', 130.35', 130.45', 130.55'
grades gray @ 131.5'

132.2

DOLOMITE; grayish brown; micritic; fresh; strong; hard; banded; w/anhydrite bedding; (Salina Group - Unit F).

132.9

DOLOMITE; argillaceous; gray; micritic; fresh; strong; hard; banded; (Salina Group - Unit F).

REMARKS

BLACK & VEATCH

BORING LOG

BORING NO. RW-C4

SHEET 10 OF 10

CLIENT	PROJECT	PROJECT NO.
Detroit Edison	Fermi 3 COL Application	147483

PROJECT LOCATION	COORDINATES	GROUND ELEVATION (DATUM)	TOTAL DEPTH
Monroe, MI	N 6291.9' E 4312.0'	580.2 ft (NAVD 88)	146.2 (feet)

SURFACE CONDITIONS	COORDINATE SYSTEM	DATE START	DATE FINISHED
Gravel parking lot	Plant	06/13/07	08/14/07

LOGGED BY	CHECKED BY	APPROVED BY
TB ECA Bonnie/Ang	EM TB Dogbey/Bonnie	EM Meyer

SAMPLING							CORING									
SAMPLE TYPE	SAMPLE NUMBER	SET 6 INCHES	2ND 6 INCHES	3RD 6 INCHES	N VALUE	SAMPLE RECOVERY	CORE SIZE	RUN NUMBER	RUN LENGTH	RUN RECOVERY	RQD RECOVERY	PERCENT RECOVERY	RQD	DEPTH (FEET)	SAMPLE TYPE	ELEVATION (FEET)	GRAPHIC LOG	CLASSIFICATION OF MATERIALS	REMARKS
							HQ	22	2.5	0.7	0.0	28	0	135		445		90°,J,T,Ca,Sp,Pl,SR @ 135.3-136.0'	
																		0°,B,T,No,No,Pl,SR @ 135.5', 135.7'	
														136		444			
										136.2									
							HQ	23	2.5	0.7	0.0	28	0	137		443		137.1	
																		LIMESTONE; dark gray; micritic; fresh; strong; hard; pitted; (Salina Group - Unit F).	
														138		442		0°,B,VN,Cl,Ir,SR @ 137.3'	
																		0°,B,VN,No,No,Pl,SR @ 137.65', 137.75'	
																		137.8	
										138.7								DOLOMITE; argillaceous; gray; micritic; fresh; strong; hard; banded; (Salina Group - Unit F).	
							HQ	24	2.5	0.0	0.0	0	0	139		441			
														140		440			
														141		439			
										141.2									
							HQ	25	2.5	0.0	0.0	0	0	142		438			
														143		437			
										143.7									
							HQ	26	2.5	0.8	0.0	32	0	144		436			
														145		435			
																		145.6	
														146		434		CLAYSTONE; dark gray; micritic; slightly weathered; moderately strong; moderately hard; (Salina Group - Unit F).	
										146.2									Bottom of boring @ 146.2'. Water level not recorded. Backfilled w/ bentonite chips from 123' to 45' bgs on 09/07/07. Continued w/ bentonite chips to 3' bgs then gravel to surface on 09/12/07.
														147		433			
														148		432			
														149		431			
														150					

5/8/2008 6:34 PM DTE - Fermi 3 Geotech

BLACK & VEATCH

BORING LOG

BORING NO. TB-C1

CLIENT	PROJECT	PROJECT NO.
Detroit Edison	Fermi 3 COL Application	147483

PROJECT LOCATION	COORDINATES	GROUND ELEVATION (DATUM)	TOTAL DEPTH
Monroe, MI	N 6671.8' E 4382.7'	580.7 ft (NAVD 88)	30.9 (feet)

SURFACE CONDITIONS	COORDINATE SYSTEM	DATE START	DATE FINISHED
Graveled street	Plant	08/26/07	08/27/07

LOGGED BY	CHECKED BY	APPROVED BY
TBG Mass/Bonnie TB	EM BT Dogbey/Bonnie TB	Meyer EM

SAMPLING: SAMPLE TYPE	SAMPLE NUMBER	SET 6 INCHES	2ND 6 INCHES	3RD 6 INCHES	N VALUE	SAMPLE RECOVERY	CORING: CORE SIZE	RUN NUMBER	RUN LENGTH	RUN RECOVERY	RQD RECOVERY	PERCENT RECOVERY	RQD	DEPTH (FEET)	ELEVATION (FEET)	CLASSIFICATION OF MATERIALS	REMARKS
														0	580	COBBLES - About 100% angular, flat, very hard cobbles w/max. size 8"; brown; dry; weak reaction w/ HCl; homogeneous; (Fill).	Boring advanced w/vacuum excavation.
														1	579		
														2	578		
														3	577		
														4	576		
														5	575		
										6.0				6	574		
S	1					2.7								7	573	Well Graded SAND (SW) - About 90% fine to coarse, subangular to angular, hard sand; about 10% angular, very hard cobbles w/max. size 3"; trace low plasticity, low toughness, no dilatancy fines; brown; dense; moist; strong hydrocarbon odor; strong reaction w/ HCl; homogeneous; (Fill).	Below 6.0' continued w/4" ID sonic continuous sampler w/nominal 6" temporary steel casing advanced w/sampler. Discrete Sample labeled SC1.
														8	572		
														9	571		
										10.0				10	570	grades w/5% cobbles; 5% fines.	Discrete sample SC-2A collected for geochemical analysis @ 10.0-11.5'.
														11	569	Organic SOIL (OL) - About 80% low plasticity, low toughness, slow dilatancy fines; about 20% fine to medium sand; very dark brown; soft; moist; combined hydrocarbon odor & organic (swampy) odor; no reaction w/HCl; homogeneous; Peat.	Discrete Sample labeled SC2.
S	2					5.0								12	568		
														13	567	Fat CLAY (CH) - About 100% high plasticity, no toughness, no dilatancy fines; olive brown & gray; hard; moist; no odor; no reaction w/HCl; mottled; (Lacustrine Deposit).	
														14	566		
														15			

11.0

11.5

5/8/2008 3:27 PM DTE - Fermi 3 Geotech

BLACK & VEATCH

BORING LOG

BORING NO. TB-C1

CLIENT	PROJECT	PROJECT NO.
Detroit Edison	Fermi 3 COL Application	147483

PROJECT LOCATION	COORDINATES	GROUND ELEVATION (DATUM)	TOTAL DEPTH
Monroe, MI	N 6671.8' E 4382.7'	580.7 ft (NAVD 88)	30.9 (feet)

SURFACE CONDITIONS	COORDINATE SYSTEM	DATE START	DATE FINISHED
Graveled street	Plant	08/26/07	08/27/07

LOGGED BY	CHECKED BY	APPROVED BY
TB for Mass/Bonnie TB	Em for Dogbey/Bonnie TB	Em Meyer

SAMPLING: SAMPLE TYPE	SAMPLE NUMBER	SET 6 INCHES	2ND 6 INCHES	3RD 6 INCHES	N VALUE	SAMPLE RECOVERY	DEPTH (FEET)	ELEVATION (FEET)	CLASSIFICATION OF MATERIALS	REMARKS
			15.0				15			
							16	565		Ground water sample taken for chemical analysis @ 15.5'. Set nominal 6" temporary steel casing to 15.5'. Below 15.5' continued w/4¼" ID; 8" OD hollow stem augers. SPT performed w/D-50 automatic hammer. Driller reported drilling through a cobble ~ 4" thick @ 18.3'.
TW	3					1.2		564		
							17		17.3	
								563	Gravelly Lean CLAY with Sand (CL) - About 65% medium plasticity, medium toughness fines; 25% fine, subangular gravel w/max. size 3/4"; 10% fine to coarse, subangular sand; trace cobbles; brown; moist; strong reaction w/HCl;	
SPT	4	50/4"	-	-	50+	.35	18			
								562		
							19			
								561		
							20			
								560		
TW	5					1.1	21			
									21.5	
								559	Lean CLAY with Gravel (CL) - About 85% low plasticity, low toughness, no dilatancy fines; about 15% fine, subangular gravel w/max. size 3/8"; brown; moist; strong reaction w/HCl.	
							22			
								558		
							23			
								557	23.5	
							24		Gravelly Lean CLAY (CL) - About 70% low plasticity, low toughness, no dilatancy fines; about 30% fine to coarse, angular to subangular gravel w/max. size 0.9"; dark gray; moist; strong reaction w/HCl; homogeneous.	
								556		
							25			
								555		
SPT	6	13	15	21	36	NR	26			
								554		
							27			
								553		
							28			
								552		
							29			
								551		
							30			

5/8/2008 3:27 PM DTE - Fermi 3 Geotech

BLACK & VEATCH

BORING LOG

BORING NO. TB-C1

CLIENT	PROJECT	PROJECT NO.
Detroit Edison	Fermi 3 COL Application	147483

PROJECT LOCATION	COORDINATES	GROUND ELEVATION (DATUM)	TOTAL DEPTH
Monroe, MI	N 6671.8' E 4382.7'	580.7 ft (NAVD 88)	30.9 (feet)

SURFACE CONDITIONS	COORDINATE SYSTEM	DATE START	DATE FINISHED
Graveled street	Plant	08/26/07	08/27/07

LOGGED BY	CHECKED BY	APPROVED BY
Mass/Bonnie TB	Dogbey/Bonnie TB	Meyer EM

SAMPLING							CORING									
SAMPLE TYPE	SAMPLE NUMBER	SET 6 INCHES	2ND 6 INCHES	3RD 6 INCHES	N VALUE	SAMPLE RECOVERY	CORE SIZE	RUN NUMBER	RUN LENGTH	RUN RECOVERY	RQD RECOVERY	PERCENT RECOVERY	RQD	DEPTH (FEET)	SAMPLE TYPE	ELEVATION (FEET)	GRAPHIC LOG	CLASSIFICATION OF MATERIALS	REMARKS
SPT	7	50/4"	-	-		0.2								30		550		grades max. gravel size 1.5"	Auger refusal @ 30.9'.
														31		549			Bottom of boring @ 30.9'. Water level not recorded. Boring backfilled w/bentonite chips to 5.0'; backfilled to surface w/gravel on 09/12/07.
														32		548			
														33		547			
														34		546			
														35		545			
														36		544			
														37		543			
														38		542			
														39		541			
														40		540			
														41		539			
														42		538			
														43		537			
														44		536			
														45					

BLACK & VEATCH

BORING LOG

BORING NO. TB-C2

CLIENT	PROJECT	PROJECT NO.
Detroit Edison	Fermi 3 COL Application	147483

PROJECT LOCATION	COORDINATES	GROUND ELEVATION (DATUM)	TOTAL DEPTH
Monroe, MI	N 6520.1' E 4394.4'	579.7 ft (NAVD 88)	30.0 (feet)

SURFACE CONDITIONS	COORDINATE SYSTEM	DATE START	DATE FINISHED
Gravel roadway/storage area	Plant	08/25/07	08/28/07

LOGGED BY	CHECKED BY	APPROVED BY
TB Bonnie/Grainger	Dogbey/Bonnie TB	Meyer

SAMPLING							CORING									
SAMPLE TYPE	SAMPLE NUMBER	SET 6 INCHES	2ND 6 INCHES	3RD 6 INCHES	N VALUE	SAMPLE RECOVERY	CORE SIZE	RUN NUMBER	RUN LENGTH	RUN RECOVERY	RQD RECOVERY	PERCENT RECOVERY	RQD	DEPTH (FEET)	SAMPLE TYPE	ELEVATION (FEET)	GRAPHIC LOG	CLASSIFICATION OF MATERIALS	REMARKS
														0		579		COBBLES - About 100% angular hard cobbles w/max. size 9"; brown; dry; weak reaction w/HCl; homogeneous; (Fill).	Boring advanced w/vacuum excavation.
														1		578			
														2		577			
														3		576			
														4		575			
														5		574			
														6		573			
														7		572			Below 6.5' continued w/4¼" ID; 8" OD hollow stem augers. SPT performed w/D-50 automatic hammer.
														8		571			
SPT	1	7	6	10	16	0.0								9		570			
														10		569			
														11		568			
														12		567			
														13		566			
														14		565		14.3	
SPT	2	4	3	1	4	1.1								15				Organic SOIL (OL) - About 100% high plasticity, low toughness, no dilatancy fines; very dark brown; soft to	

BLACK & VEATCH

BORING LOG

BORING NO. TB-C2

CLIENT	PROJECT	PROJECT NO.
Detroit Edison	Fermi 3 COL Application	147483

PROJECT LOCATION	COORDINATES	GROUND ELEVATION (DATUM)	TOTAL DEPTH
Monroe, MI	N 6520.1' E 4394.4'	579.7 ft (NAVD 88)	30.0 (feet)

SURFACE CONDITIONS	COORDINATE SYSTEM	DATE START	DATE FINISHED
Gravel roadway/storage area	Plant	08/25/07	08/28/07

LOGGED BY	CHECKED BY	APPROVED BY
TB Bonnie/Grainger GCO for	TB Dogbey/Bonnie	Meyer SM

SAMPLING							CORING									
SAMPLE TYPE	SAMPLE NUMBER	SET 6 INCHES	2ND 6 INCHES	3RD 6 INCHES	N VALUE	SAMPLE RECOVERY	CORE SIZE	RUN NUMBER	RUN LENGTH	RUN RECOVERY	RQD RECOVERY	PERCENT RECOVERY	RQD	DEPTH (FEET)	SAMPLE TYPE	ELEVATION (FEET)	GRAPHIC LOG	CLASSIFICATION OF MATERIALS	REMARKS
														15		564		very soft; moist; weak reaction w/HCl; homogeneous; Peat	Water level @ 7.6' prior to drilling on 08/28/07.
																		15.5	
														16		563		Lean CLAY (CL) - About 95% medium plasticity, medium toughness, no dilatancy fines; about 5% sand; brown; hard; moist; strong reaction w/HCl; homogeneous	
TW	3					1.6								17		562			
														18		561			
																		18.8	
SPT	4	3	8	12	20	1.4								19		560		Lean CLAY with Gravel (CL) - About 80% medium plasticity, medium toughness, no dilatancy fines; about 15% fine, subangular to angular gravel w/max. size ½"; about 5% sand; dark grayish brown; hard; moist; strong reaction w/HCl; homogeneous	
														20		559			
														21		558		grades w/ trace cobbles @ 21.5'	Only a piece of cobble recovered in TW5.
TW	5					0.4								22		557			
														23		556			
														24		555		24.0	
SPT	6	9	15	17	32	NR								25		554		Lean CLAY with Gravel (CL) - About 75% medium plasticity, medium toughness, no dilatancy fines; about 15% fine, angular gravel w/max. size ¼"; about 10% sand; dark gray; hard; moist; homogeneous	
														26		553			
														27		552			
														28		551			
														29		550			
SPT	7	12	50/ 0.3	-	50+	NR								30					Auger refusal @ 30.0'.

BLACK & VEATCH

BORING LOG

BORING NO. TB-C2

CLIENT	PROJECT	PROJECT NO.
Detroit Edison	Fermi 3 COL Application	147483

PROJECT LOCATION	COORDINATES	GROUND ELEVATION (DATUM)	TOTAL DEPTH
Monroe, MI	N 6520.1' E 4394.4'	579.7 ft (NAVD 88)	30.0 (feet)

SURFACE CONDITIONS	COORDINATE SYSTEM	DATE START	DATE FINISHED
Gravel roadway/storage area	Plant	08/25/07	08/28/07

LOGGED BY	CHECKED BY	APPROVED BY
TB Bonnie/Grainger	TB Dogbey/Bonnie	Meyer

SAMPLING: SAMPLE TYPE | SAMPLE NUMBER | SET 6 INCHES | 2ND 6 INCHES | 3RD 6 INCHES | N VALUE | SAMPLE RECOVERY

CORING: CORE SIZE | RUN NUMBER | RUN LENGTH | RUN RECOVERY | RQD RECOVERY | PERCENT RECOVERY | RQD

DEPTH (FEET)	SAMPLE TYPE	ELEVATION (FEET)	GRAPHIC LOG	CLASSIFICATION OF MATERIALS	REMARKS
30		549			Bottom of boring @ 30.0'. Water level not recorded. Boring backfilled w/ bentonite chips to 6.0'; backfilled to surface w/gravel on 08/28/07.
31		548			
32		547			
33		546			
34		545			
35		544			
36		543			
37		542			
38		541			
39		540			
40		539			
41		538			
42		537			
43		536			
44		535			
45					

BLACK & VEATCH

BORING LOG

BORING NO. TB-C3

CLIENT	PROJECT	PROJECT NO.
Detroit Edison	Fermi 3 COL Application	147483

PROJECT LOCATION	COORDINATES	GROUND ELEVATION (DATUM)	TOTAL DEPTH
Monroe, MI	N 6673.8' E 4474.6'	580.6 ft (NAVD 88)	51.0 (feet)

SURFACE CONDITIONS	COORDINATE SYSTEM	DATE START	DATE FINISHED
Gravel parking area.	Plant	07/17/07	07/27/07

LOGGED BY	CHECKED BY	APPROVED BY
TB ECA TB for Bonnie/Ang/Mass	EB for TB for Dogbey/Mass	EM Meyer

SAMPLING: SAMPLE TYPE	SAMPLE NUMBER	SET 6 INCHES	2ND 6 INCHES	3RD 6 INCHES	N VALUE	SAMPLE RECOVERY	CORING: CORE SIZE	RUN NUMBER	RUN LENGTH	RUN RECOVERY	RQD RECOVERY	PERCENT RECOVERY	RQD	DEPTH (FEET)	SAMPLE TYPE	ELEVATION (FEET)	GRAPHIC LOG	CLASSIFICATION OF MATERIALS	REMARKS
														0		580		COBBLES - About 60% angular; elongated, very hard cobbles w/max. size 8"; about 20% fine to coarse, angular, hard gravel w/max. size 3"; 15% fine to coarse, angular, hard sand; about 5% fines; gray; (Fill).	Boring advanced w/vacuum excavation.
														1		579			
														2		578			
														3		577			
														4		576			
														5		575			
														6		574			
										7.0				7		573			
S	1						NR							8		572			Vacuum excavation to 8.0', hole collapsed to 7.0'. Below 7.0' continued w/4" ID sonic continuous sampler w/ nominal 6" temporary steel casing advanced w/sampler.
														9		571			
										10.0				10		570			
														11		569			
S	2						NR							12		568			Discrete sample S02A collected @ 12.0-13.0'.
														13		567			
										14.0				14		566		14.0 — Fat CLAY - About 100% high plasticity, high toughness, no dilatancy; greenish gray; soft; moist; no reaction w/HCl; homogeneous; (Lacustrine Deposit).	
														15					

BLACK & VEATCH

BORING LOG

BORING NO. TB-C3

CLIENT	PROJECT	PROJECT NO.
Detroit Edison	Fermi 3 COL Application	147483

PROJECT LOCATION	COORDINATES	GROUND ELEVATION (DATUM)	TOTAL DEPTH
Monroe, MI	N 6673.8' E 4474.6'	580.6 ft (NAVD 88)	51.0 (feet)

SURFACE CONDITIONS	COORDINATE SYSTEM	DATE START	DATE FINISHED
Gravel parking area.	Plant	07/17/07	07/27/07

LOGGED BY	CHECKED BY	APPROVED BY
TB ECA TB for Bonnie/Ang/Mass	Em for TB for Dogbey/Mass	Meyer Em

SAMPLING							CORING							DEPTH (FEET)	SAMPLE TYPE	ELEVATION (FEET)	GRAPHIC LOG	CLASSIFICATION OF MATERIALS	REMARKS
SAMPLE TYPE	SAMPLE NUMBER	SET 6 INCHES	2ND 6 INCHES	3RD 6 INCHES	N VALUE	SAMPLE RECOVERY	CORE SIZE	RUN NUMBER	RUN LENGTH	RUN RECOVERY	RQD RECOVERY	PERCENT RECOVERY	RQD						
S	3												4.5	15		565			Discrete sample S03A collected @ 14.9-15.2'. PP = 1.5 TSF @ 15.0'.
														16		564			
														17		563			
																		17.5	
														18		562		Lean CLAY (CL) - About 95% medium plasticity, medium toughness, no dilatancy fines; about 5% sand; brown; firm; moist; no reaction w/HCl; (Glacial Till).	Discrete sample S03B collected @ 17.9-18.1'. PP = 3.0 TSF @ 18.0'. Water level @ 9.5' on 07/26/07. Set nominal 6" temporary steel casing to 18.0' Hole open to 18.5'. Below 18.5' continued w/NWJ rods & 4½" tricone bit using bentonite mud as drilling fluid. SPT performed w/D-50 automatic hammer. PP > 4.5 TSF @ 20.5'. TW-4: tube bent.
TW	4			18.5									2.0	19		561			
														20		560		grades w/trace fine to coarse, subrounded to subangular gravel w/max. size ½"; light olive brown; hard @ 20.5'	
TW	5												1.7	21		559			
														22		558			
SPT	6	6	10	13	23	1.4								23		557		grades grayish brown @ 24.0'	
														24		556			
														25		555			
																		25.5	
SPT	7	6	12	48	60	0.7								26		554		Clayey GRAVEL (GC) - About 60% fine to coarse, subrounded to subangular, hard gravel w/max. size 1¼"; about 30% medium plasticity, medium toughness, no dilatancy fines; about 10% fine to coarse, subrounded to subangular sand; dark grayish brown; very dense; moist; clay seams.	
														27		553			
																		27.0	
																		DOLOMITE; weathered.	
														28		552		28.0	
																		DOLOMITE; light brownish gray; micritic; fresh; strong; hard; w/shale partings; (Bass Islands Group).	
S	8			28.0									2.3	29		551		28.5 DOLOMITE; light brownish gray & dark gray, mottled; micritic; fresh; strong; hard; (Bass Islands Group). light brownish gray @ 28.9-30.4'	Below 28.0' continued w/4" ID sonic continuous sampler w/ nominal 6" temporary steel
														30					

BLACK & VEATCH

BORING LOG

BORING NO. TB-C3

CLIENT	PROJECT	PROJECT NO.
Detroit Edison	Fermi 3 COL Application	147483

PROJECT LOCATION	COORDINATES	GROUND ELEVATION (DATUM)	TOTAL DEPTH
Monroe, MI	N 6673.8' E 4474.6'	580.6 ft (NAVD 88)	51.0 (feet)

SURFACE CONDITIONS	COORDINATE SYSTEM	DATE START	DATE FINISHED
Gravel parking area.	Plant	07/17/07	07/27/07

LOGGED BY	CHECKED BY	APPROVED BY
TB ECA TB for Bonnie/Ang/Mass	SM for TB for Dogbey/Mass	Meyer EM

SAMPLING: SAMPLE TYPE	SAMPLE NUMBER	SET 6 INCHES	2ND 6 INCHES	3RD 6 INCHES	N VALUE	SAMPLE RECOVERY

CORING: CORE SIZE	RUN NUMBER	RUN LENGTH	RUN RECOVERY	RQD RECOVERY	PERCENT RECOVERY	RQD
			30.3			
HQ	1	3.2	3.1	1.0	97	31
			33.5			
HQ	2	5.0	5.0	2.4	100	48
			38.5			
HQ	3	5.0	5.0	3.5	100	70
			43.5			

DEPTH (FEET)	SAMPLE TYPE	ELEVATION (FEET)	GRAPHIC LOG	CLASSIFICATION OF MATERIALS	REMARKS
30					casing advanced w/sampler. Sonic core S-8 stored in box labeled S1. Set nominal 6" temporary steel casing to 30.3'. Below 30.3' continued w/ triple tube wire line core barrel w/diamond bit using water as drilling fluid. Core box #1 starts @ 30.3'. Core loss @ 30.3-30.4'. No drilling fluid return @ 33.5'.
				30.4	
31		550		DOLOMITE; grayish brown; micritic; fresh to slightly weathered; very strong; very hard; w/widely spaced stylolites; (Bass Islands Group).	
				90°,J,Ca,Pa,Pl,SR @ 30.4-31.7', 31.4-32.7'	
32		549		70°,J,Ca,Pa,Pl,SR @ 31.3-31.4', 32.7-33.4'	
				claystone parting; very dark gray; fresh; strong; hard; @ 31.8'	
33		548		90°,J,Ca,Pa,WA,SR @ 32.2-32.7'	
				80°,J,T,Pl @ 33.2-33.8'	
		547		33.8	
34				DOLOMITE; argillaceous; grayish brown and light brownish gray, banded; micritic; fresh; very strong; very hard; (Bass Islands Group).	
		546		claystone parting; very dark gray; fresh; strong; hard; @ 33.9'	
35				80°,J,Cl,Pa,Pl,SR @ 35.1-35.6'	
		545		shale parting - 0°,B,Pl,SR @ 35.4'	
36				large (1.2") vug, partially filled w/0.3" anhydrite crystals @ 35.5'	
		544		90°,J,Cl,Pa,Pl,SR @ 35.6-35.8'	
37				90°,J,No,No,Pl,SR @ 35.9-37.4'	
		543		60°,J,Ca,Pa,Pl,SR @ 36.5-36.8'	
38				stylolites begin @ 36.7'	
				highly fractured @ 37.1-37.2', 37.4-37.6'	
				37.7	
		542		DOLOMITE; gray & grayish brown, banded; vuggy; micritic; slightly weathered; strong; hard; (Bass Islands Group).	
39				70°,J,Ca,Pa,Pl,SR @ 39.2-39.6'	
		541		no vugs @ 39.3-40.1'	
40				0°,B,Ca,Fi,Pl,SR @ 39.4', 39.5', 40.3'	
		540		130°,J,No,No,Pl,R @ 39.6-39.8'	
41				80°,J,Ca,Pa,Pl,SR @ 39.6-39.7'	
		539		20°,J,Ca,Pa,Pl,R @ 40.2-40.3'	
42				20°,J,Ca,Pa,Pl,SR @ 40.5'	
		538		zones of closely spaced stylolites, 4.8" apart beginning @ 40.5'	
43				41.4	Drill chatter @ 41.5'.
		537		DOLOMITE; light brownish gray; micritic; fresh; strong; very hard; (Bass Islands Group).	
44				highly fractured @ 41.4-41.5'	
		536		70°,J,No,No,Pl,SR @ 41.7-42.0'	
45				0°,B,No,No,Pl,SR @ 42.6'	
				vuggy @ 43.1-43.2'	
				60°,J,Cl,Pa,Pl,R @ 43.4-43.5'	
				grades light yellowish brown & gray, banded @ 43.5'	
				90°,J,Ca,Pa,Pl,SR @ 43.5-44.4'	
				0°,B,No,No,Pl,SR @ 43.8', 44.0'	
				highly fractured @ 44.2-44.4'	

BLACK & VEATCH

BORING LOG

BORING NO. TB-C3
SHEET 4 OF 4

CLIENT	PROJECT	PROJECT NO.
Detroit Edison	Fermi 3 COL Application	147483

PROJECT LOCATION	COORDINATES	GROUND ELEVATION (DATUM)	TOTAL DEPTH
Monroe, MI	N 6673.8' E 4474.6'	580.6 ft (NAVD 88)	51.0 (feet)

SURFACE CONDITIONS	COORDINATE SYSTEM	DATE START	DATE FINISHED
Gravel parking area.	Plant	07/17/07	07/27/07

LOGGED BY	CHECKED BY	APPROVED BY
TB Bonnie/Ang/Mass (ECA TB for)	Dogbey/Mass (TB for)	Meyer

SAMPLING							CORING									
SAMPLE TYPE	SAMPLE NUMBER	SET 6 INCHES	2ND 6 INCHES	3RD 6 INCHES	N VALUE	SAMPLE RECOVERY	CORE SIZE	RUN NUMBER	RUN LENGTH	RUN RECOVERY	RQD RECOVERY	PERCENT RECOVERY	RQD	DEPTH (FEET)	SAMPLE TYPE	ELEVATION (FEET)

GRAPHIC LOG	CLASSIFICATION OF MATERIALS	REMARKS
	10°,J/B,No,No,Pl,S @ 44.9'	Core box #2 starts @ 44.9'.
	30°,J,No,No,WA,SR @ 45.5-45.6', 45.7-45.8'	
	40°,J,No,No,Pl,S @ 46.0-46.1' vugs, elongated axis oriented parallel to 40° @ 46.1-46.4' highly fractured w/many vertical fractures @ 46.5-47.2' 50°,J,No,No,Pl,SR @ 46.8-47.0'	
	47.0	
	DOLOMITE; greenish gray; banded; micritic; fresh; very strong; hard; 0.1" shale partings & widely spaced stylolites; (Bass Islands Group). 50°,J,No,No,Pl,SR @ 48.0-48.1' 90°,J,T,Pl @ 48.6-49.7' (many)	Core loss @ 48.1-48.5'.
	50.0	Core loss @ 49.7-49.9'.
	DOLOMITE; argillaceous; dark grayish brown; pitted; micritic; slightly weathered; very strong; very hard; w/ black; very fine grained; fresh; strong; hard; shale partings; (Bass Islands Group). 80°,J,No,No,Pl,SR @ 50.2-51.0' 90°,J,No,No,Pl,SR @ 50.2-50.9' highly fractured @ 50.4-50.7'	Bottom of boring @ 51.0'. Water level @ 14.9' @ completion of drilling. Backfilled w/ cement-bentonite grout to 35' bgs on 08/13/07. Continued w/bentonite chips to 2' bgs then gravel to surface on 08/22/07.

CORING							DEPTH (FEET)	ELEVATION (FEET)
HQ	4	5.0	4.6	2.5	92	50	45	535
							46	534
							47	533
			48.5				48	532
HQ	5	2.5	2.3	1.9	92	76	49	531
							50	530
							51	529
							52	528
							53	527
							54	526
							55	525
							56	524
							57	523
							58	522
							59	521
							60	

4/16/2008 2:01 PM DTE - Fermi 3 Geotech

BLACK & VEATCH

BORING LOG

BORING NO. TB-C4

SHEET 1 OF 4

CLIENT	PROJECT	PROJECT NO.
Detroit Edison	Fermi 3 COL Application	147483

PROJECT LOCATION	COORDINATES	GROUND ELEVATION (DATUM)	TOTAL DEPTH
Monroe, MI	N 6510.2' E 4520.7'	580.7 ft (NAVD 88)	54.0 (feet)

SURFACE CONDITIONS	COORDINATE SYSTEM	DATE START	DATE FINISHED
Gravel parking lot	Plant	07/17/07	07/27/07

LOGGED BY	CHECKED BY	APPROVED BY
TB ECA TB for Bonnie/Ang/Mass	TB for Dogbey/Mass	Meyer

SAMPLING							CORING							DEPTH (FEET)	SAMPLE TYPE	ELEVATION (FEET)	GRAPHIC LOG	CLASSIFICATION OF MATERIALS	REMARKS
SAMPLE TYPE	SAMPLE NUMBER	SET 6 INCHES	2ND 6 INCHES	3RD 6 INCHES	N VALUE	SAMPLE RECOVERY	CORE SIZE	RUN NUMBER	RUN LENGTH	RUN RECOVERY	RQD RECOVERY	PERCENT RECOVERY	RQD						
														0		580		Well graded GRAVEL with Cobbles (GW) - About 70% fine to coarse, angular, hard gravel w/max. size 3"; about 15% angular, hard cobbles w/max. size 4"; about 10% fine to coarse, angular to subangular, hard sand; about 5% low plasticity, low toughness, rapid dilatancy, low dry strength fines; grayish brown; dry to moist; strong reaction w/HCl; homogeneous; (Fill).	Boring advanced w/vacuum excavation.
														1		579			
														2		578			
														3		577			
														4		576			
														5		575			
														6		574			
				6.9										7		573			Below 6.9' continued w/4" ID sonic continuous sampler w/ nominal 6" temporary steel casing advanced w/sampler. Discrete sample S01A collected from S-1.
S	1												NR	8		572			
														9		571			
				10.0										10		570		grades light brownish gray; wet.	
S	2												NR	11		569			
														12		568		grades light gray.	
				12.5										13		567			
S	3												NR	14		566			
														15					

4/16/2008 1:25 PM DTE - Fermi 3 Geotech

BLACK & VEATCH

BORING LOG

BORING NO. TB-C4

CLIENT	PROJECT	PROJECT NO.
Detroit Edison	Fermi 3 COL Application	147483

PROJECT LOCATION	COORDINATES	GROUND ELEVATION (DATUM)	TOTAL DEPTH
Monroe, MI	N 6510.2' E 4520.7'	580.7 ft (NAVD 88)	54.0 (feet)

SURFACE CONDITIONS	COORDINATE SYSTEM	DATE START	DATE FINISHED
Gravel parking lot	Plant	07/17/07	07/27/07

LOGGED BY	CHECKED BY	APPROVED BY
TB Bonnie/Ang/Mass (ECA TB for)	TB for Dogbey/Mass	Meyer

SAMPLING: SAMPLE TYPE	SAMPLE NUMBER	SET 6 INCHES	2ND 6 INCHES	3RD 6 INCHES	N VALUE	SAMPLE RECOVERY	CORING: CORE SIZE	RUN NUMBER	RUN LENGTH	RUN RECOVERY	RQD RECOVERY	PERCENT RECOVERY	RQD	DEPTH (FEET)	ELEVATION (FEET)	CLASSIFICATION OF MATERIALS	REMARKS
														15	565	grades very dark gray.	
										16.4				16			
S	4					1.6								17	564	Fat CLAY with Sand (CH) - About 75% high plasticity, medium toughness, no dilatancy, very high dry strength fines; about 25% fine sand; very dark gray; soft; wet; organic odor; strong reaction w/HCl; homogeneous; wood fragments; (Lacustrine Deposit).	Discrete sample S02A collected @ 17.2-17.5'.
														18	563		
										18.0				19	562		Hole open to 18.0'. Set nominal 6" temporary steel casing to 18.0'. Water level @ 5.5' prior to drilling on 07/25/07. Below 18.0' continued w/ NWJ rods & 4½" tricone bit using bentonite mud as drilling fluid. PP > 4.5 TSF @ 21.75'.
TW	2					0.7								20	561	Sandy Lean CLAY (CL) - About 70% medium plasticity, medium toughness, no dilatancy fines; about 20% fine to coarse, subrounded to subangular sand; about 10% fine to coarse, subrounded to subangular gravel w/max. size 6/8", fractured w/3 hammer blows; dark gray; hard; moist; (Glacial Till).	
														21	560		
														22	559		
SPT	3	8	13	17	30	1.2								23	558		
														24	557		
														25	556	Clayey GRAVEL (GC) - About 70% fine to coarse, subrounded to subangular, hard gravel w/max. size 1½"; about 30% medium plasticity, medium toughness, no dilatancy fines; gray; medium dense; moist to wet.	
SPT	4	7	9	11	20	0.5								26	555		
														27	554		
SPT	5	50/5"			50+	0.3								28	553	Poorly graded GRAVEL with Sand (GP) - About 85% fine to coarse, subangular to angular, hard gravel w/max. size 1"; about 15% medium to coarse; subangular to angular sand; gray; very dense; wet; (Weathered Bedrock).	
										28.5				29	552	DOLOMITE; light gray & dark gray, mottled; micritic; fresh; strong; hard; (Bass Islands Group). grades light brownish gray & dark gray, mottled @ 28.7'	Below 28.5' continued w/4" ID sonic continuous sampler w/
S	6					1.4								30	551		
																29.8	

BLACK & VEATCH

BORING LOG

CLIENT	PROJECT	PROJECT NO.
Detroit Edison	Fermi 3 COL Application	147483

PROJECT LOCATION	COORDINATES	GROUND ELEVATION (DATUM)	TOTAL DEPTH
Monroe, MI	N 6510.2' E 4520.7'	580.7 ft (NAVD 88)	54.0 (feet)

SURFACE CONDITIONS	COORDINATE SYSTEM	DATE START	DATE FINISHED
Gravel parking lot	Plant	07/17/07	07/27/07

LOGGED BY	CHECKED BY	APPROVED BY
TB ECA TB for Bonnie/Ang/Mass	TB for TB for Dogbey/Mass	Em Meyer

SAMPLING							CORING							DEPTH (FEET)	SAMPLE TYPE	ELEVATION (FEET)	GRAPHIC LOG	CLASSIFICATION OF MATERIALS	REMARKS
SAMPLE TYPE	SAMPLE NUMBER	SET 6 INCHES	2ND 6 INCHES	3RD 6 INCHES	N VALUE	SAMPLE RECOVERY	CORE SIZE	RUN NUMBER	RUN LENGTH	RUN RECOVERY	RQD RECOVERY	PERCENT RECOVERY	RQD						
										29.9				30		550		DOLOMITE; light brownish gray; micritic; fresh; strong; hard, w/stylolites; (Bass Islands Group).	nominal 6" temporary steel casing advanced w/sampler.
S	7					1.1													
										31.0				31				31.0	
																549		DOLOMITE; grayish brown to dark grayish brown; micritic; fresh; very strong; hard; w/very widely spaced, very dark gray, very fine grained, fresh, strong, hard, shale partings; (Bass Islands Group).	Sonic core S-6 and S-7 stored in box labeled S1. Hole open to 31.0'. Set nominal 6" temporary steel casing to 30.5'. Below 31.0' continued w/ triple tube wire line core barrel w/diamond bit using water as drilling fluid. Core box #1 starts @ 31.0'. Water level @ 14.9' prior to drilling on 07/27/07. No drilling fluid return @ 36.0'.
														32					
HQ	1	3.0	2.8	2.6	93	87										548		closely spaced stylolites @ 31.2-31.5' 85°,J,VN,WA @ 31.6-32.0' pitted (pits ~ 0.08") @ 32.1-32.7'	
														33					
																547		90°,J,Ca,Pa,Pl,SR @ 33.4-33.8'	
										34.0				34					
																546		vuggy @ 34.0-34.9'	
														35				0°,B,Cl,Fi,Pl,SR @ 34.9'	
																		35.0	
																545		DOLOMITE; argillaceous; olive gray; micritic; fresh to slightly weathered; strong; very hard; w/very dark gray, very fine grained, fresh, strong, moderately hard, shale partings; (Bass Islands Group).	
														36					
HQ	2	5.0	5.0	3.5	100	70										544		80°,J,N,Ca,Pa,Pl @ 35.3-35.9' 80°,J,VN,Ca,Pa,Pl @ 35.5-36.2' very closely spaced shale partings @ 36.2-36.4' vuggy @ 37.0'	
														37					
																543		vugs (largest = 1.1"), partially filled w/anhydrite crystals (0.3") @ 37.2-37.4' gray @ 37.3-40.3' 20°,J,Cl,Fi,Pl,SR @ 37.7', 38.8' 10°,J,Cl,Fi,Pl,SR @ 38.3'	
														38					
																542			
										39.0				39					
																541		30°,J,UK,Fi,Pl,SR @ 39.4' 20°,J,UK,Fi,Pl,SR @ 39.5'	
														40					
																540		0°,J,UK,Pa,Pl,SR @ 40.1, 40.3' grades gray, banded; fresh; very strong; w/closely spaced stylolites; bands angled 30° @ 40.3'	
														41				70°,J,No,No,Pl,R @ 40.4-40.6'	
																		41.0	
HQ	3	5.0	5.0	0.9	100	18										539		DOLOMITE; light olive gray & gray, banded; micritic; fresh to slightly weathered; strong; hard; w/stylolites & closely spaced shale partings; (Bass Islands Group).	
														42				highly fractured @ 41.0-41.2' 50°,J,No,No,St,R @ 41.2-41.5' 0°,J,No,No,Pl,SR @ 41.7' 90°,J,T to N,Ca,Pa,Pl,SR @ 41.9-43.5'	
														43		538			
																537		90°,J,No,No,WA,SR @ 43.4-43.8'	
										44.0				44					
																536		grades light brownish gray & light gray, banded @ 44.0'	
														45					

BLACK & VEATCH

BORING LOG

BORING NO. TB-C4

CLIENT	PROJECT	PROJECT NO.
Detroit Edison	Fermi 3 COL Application	147483

PROJECT LOCATION	COORDINATES	GROUND ELEVATION (DATUM)	TOTAL DEPTH
Monroe, MI	N 6510.2' E 4520.7'	580.7 ft (NAVD 88)	54.0 (feet)

SURFACE CONDITIONS	COORDINATE SYSTEM	DATE START	DATE FINISHED
Gravel parking lot	Plant	07/17/07	07/27/07

LOGGED BY	CHECKED BY	APPROVED BY
Bonnie/Ang/Mass	Dogbey/Mass	Meyer

SAMPLING							CORING									
SAMPLE TYPE	SAMPLE NUMBER	SET 6 INCHES	2ND 6 INCHES	3RD 6 INCHES	N VALUE	SAMPLE RECOVERY	CORE SIZE	RUN NUMBER	RUN LENGTH	RUN RECOVERY	RQD RECOVERY	PERCENT RECOVERY	RQD	DEPTH (FEET)	SAMPLE TYPE	ELEVATION (FEET)	GRAPHIC LOG	CLASSIFICATION OF MATERIALS	REMARKS
							HQ	4	5.0	5.0	2.9	100	58	45		535		highly fractured @ 44.9-45.1'	Core box #2 starts @ 44.9'.
														46				very closely spaced stylolites @ 45.8-45.9' 70°,J,No,No,Pl,SR @ 46.1-46.6'	
																534		46.4 DOLOMITE; argillaceous; gray & light gray, banded; pitted; micritic to very fine grained (crystalline); fresh; very strong; very hard; pits 0.04-0.08"; w/very closely spaced stylolites; (Bass Islands Group). 75°,J,No,No,Pl,SR @ 46.5-46.8'	
														47				highly fractured w/many approx. vertical fractures @ 46.6-47.2' 80°,J,No,No,Pl,R @ 47.0-47.2' (2), 47.3-47.5'	
																533		banding more pronounced @ 48.4-50.9'	
														48					
																532			
							HQ	5	2.0	49.0 1.9	1.4	95	70	49				90°,J,No,No,Pl,SR @ 49.3-49.5', 49.8-49.9', 50.1-50.2' 80°,J,No,No,Pl,R @ 49.3-49.7'	
																531			
														50				0°,J,Cl,Pl,SR @ 50.4'	
																530		50.9	
							HQ	6	3.0	51.0 2.5	1.0	83	33	51				DOLOMITE; grayish brown; pitted; micritic to very fine grained (crystalline); slightly weathered; very strong, hard; w/beds of fossils (mollusks) & widely spaced stylolites; pits 0.04-0.24"; (Bass Islands Group). dense fossil bed @ 51.2'	
																529			
														52				0°,B,Ca,Pa,Pl,SR @ 52.3'	
																528		90°,J,Ca/Cl,Pa,Pl,SR @ 52.5-52.9' 60°,J,Ca,Pa,Pl,SR @ 52.6-52.9'	
														53				40°,J,Cl,Fi,Pl,SR @ 53.0'	
																527		40°,J,Cl,Fi,Pl,SR @ 53.1-53.2' 20°,J,Cl,Fi,Pl,SR @ 53.4-53.5'	
														54				70°,J,Ca,Pa,Pl,SR @ 53.7-53.9'	Core loss @ 53.7-54.0'.
																526			Bottom of boring @ 54.0'. Water level @ 14.7'@ completion of drilling. Backfilled w/ cement-bentonite grout to 38' bgs on 08/13/07. Continued w/bentonite chips to 2' bgs & backfilled w/ gravel to surface on 08/21/07.
														55					
																525			
														56					
																524			
														57					
																523			
														58					
																522			
														59					
														60		521			

BLACK & VEATCH

BORING LOG

BORING NO. TB-C5

SHEET 1 OF 32

CLIENT	PROJECT	PROJECT NO.
Detroit Edison	Fermi 3 COL Application	147483

PROJECT LOCATION	COORDINATES	GROUND ELEVATION (DATUM)	TOTAL DEPTH
Monroe, MI	N 6677.7' E 4592.8'	580.8 ft (NAVD 88)	471.1 (feet)

SURFACE CONDITIONS	COORDINATE SYSTEM	DATE START	DATE FINISHED
Parking area near propane tanks	Plant	06/21/07	07/18/07

LOGGED BY	CHECKED BY	APPROVED BY
TB GLO for Bonnie/Grainger	EAB for TB Dogbey/Bonnie	Meyer

SAMPLING							CORING									
SAMPLE TYPE	SAMPLE NUMBER	SET 6 INCHES	2ND 6 INCHES	3RD 6 INCHES	N VALUE	SAMPLE RECOVERY	CORE SIZE	RUN NUMBER	RUN LENGTH	RUN RECOVERY	RQD RECOVERY	PERCENT RECOVERY	RQD	DEPTH (FEET)	SAMPLE TYPE	ELEVATION (FEET)	GRAPHIC LOG	CLASSIFICATION OF MATERIALS	REMARKS
														0		580		Poorly graded GRAVEL - About 85% subangular, hard gravel w/max. size 3"; about 5% cobbles w/max. size 6"; about 5% sand; about 5% fines; dark reddish gray; dry; no reaction w/HCl; (Fill).	Boring advanced w/vacuum excavation.
										5.0				5		576			Below 5.0' continued w/4" ID sonic continuous sampler w/ nominal 6" temporary steel casing advanced w/sampler.
S	1					5.0								10		571			Sonic core stored in box labeled S1. Discrete sample S1 collected @ 7.5-7.8'; stored in box labeled S1.
										10.0								Fat CLAY (CH) - About 95% high plasticity, high toughness, no dilatancy fines; about 5% sand; soft; mottled black & dark gray; moist; no reaction w/HCl; homogeneous; (Lacustrine Deposit).	Discrete sample S2A collected @ 10.5-10.8'; stored in box labeled S1.
S	2					5.0								12		569		Lean CLAY (CL) - About 100% medium plasticity, medium toughness, no dilatancy fines; light brownish gray; soft; moist; no reaction w/HCl; (Glacial Till).	Discrete sample S2B collected @ 13.3-13.6'; stored in box labeled S1. Sonic core

7/16/2008 2:54 PM DTE - Fermi 3 Geotech

BLACK & VEATCH

BORING LOG

BORING NO. TB-C5
SHEET 2 OF 32

CLIENT	PROJECT	PROJECT NO.
Detroit Edison	Fermi 3 COL Application	147483

PROJECT LOCATION	COORDINATES	GROUND ELEVATION (DATUM)	TOTAL DEPTH
Monroe, MI	N 6677.7' E 4592.8'	580.8 ft (NAVD 88)	471.1 (feet)

SURFACE CONDITIONS	COORDINATE SYSTEM	DATE START	DATE FINISHED
Parking area near propane tanks	Plant	06/21/07	07/18/07

LOGGED BY	CHECKED BY	APPROVED BY
TB Geo for Bonnie/Grainger	Geo for TB Dogbey/Bonnie	Em Meyer

SAMPLING							CORING									
SAMPLE TYPE	SAMPLE NUMBER	SET 6 INCHES	2ND 6 INCHES	3RD 6 INCHES	N VALUE	SAMPLE RECOVERY	CORE SIZE	RUN NUMBER	RUN LENGTH	RUN RECOVERY	RQD RECOVERY	PERCENT RECOVERY	RQD	DEPTH (FEET)	SAMPLE TYPE	ELEVATION (FEET)	GRAPHIC LOG	CLASSIFICATION OF MATERIALS	REMARKS
S	3									15.0			5.0	15		565		grades brown; hard; weak reaction w/HCl	stored in box labeled S1. Sonic core stored in box labeled S2.
														16					
														17		564			
														18		563			Discrete sample S3A collected @ 17.5-17.8'; stored in box labeled S2.
														19		562			
														20		561			
S	4									20.0			6.5	21		560		—21.1— Sandy Fat CLAY with Sand (CH) - About 75% high plasticity, high toughness fines; about 25% fine to coarse, subrounded to subangular sand; brown; hard; moist; strong reaction w/HCl	Discrete sample S4A collected @ 22.0-22.3'; stored in box labeled S2. Sonic core stored in box labeled S2.
														22		559			
														23		558			
														24		557		grades dark grayish brown	
														25		556		—24.6— DOLOMITE; light brownish gray & gray, mottled; micritic; slightly weathered; strong; hard; thin bedded; (Bass Islands Group).	Discrete sample S4B collected @ 25.0-25.3'; stored in box labeled S2.
														26		555			
S	5									26.5			NR	27		554			Below 26.5' continued w/ sonic continuous sampler using water as drilling fluid.
														28		553		—27.5— DOLOMITE; banded; light brownish gray; micritic; slightly weathered to fresh; very strong; hard; w/very thin argillaceous partings < 0.04"; (Bass Islands Group).	Sonic core stored in box labeled S3.
										29.0				29		552			Discrete sample S5 collected @ 27.0-27.3';
														30		551			

BLACK & VEATCH

BORING LOG

BORING NO. TB-C5

CLIENT	PROJECT	PROJECT NO.
Detroit Edison	Fermi 3 COL Application	147483

PROJECT LOCATION	COORDINATES	GROUND ELEVATION (DATUM)	TOTAL DEPTH
Monroe, MI	N 6677.7' E 4592.8'	580.8 ft (NAVD 88)	471.1 (feet)

SURFACE CONDITIONS	COORDINATE SYSTEM	DATE START	DATE FINISHED
Parking area near propane tanks	Plant	06/21/07	07/18/07

LOGGED BY	CHECKED BY	APPROVED BY
TB GLO for Bonnie/Grainger	EM for TB Dogbey/Bonnie	EM Meyer

SAMPLING							CORING									
SAMPLE TYPE	SAMPLE NUMBER	SET 6 INCHES	2ND 6 INCHES	3RD 6 INCHES	N VALUE	SAMPLE RECOVERY	CORE SIZE	RUN NUMBER	RUN LENGTH	RUN RECOVERY	RQD RECOVERY	PERCENT RECOVERY	RQD	DEPTH (FEET)	SAMPLE TYPE	ELEVATION (FEET)	GRAPHIC LOG	CLASSIFICATION OF MATERIALS	REMARKS
							PQ	1	2.0	1.6	0.0	80	0	30		550		90°,J,VN,No,No,PI,R @ 29.5-31.9'	stored in box labeled S3. Set nominal 6" temporary steel casing to 28.8'.
										31.0				31				31.0	
							PQ	2	5.0	5.0	5.0	100	100	32		549		DOLOMITE; argillaceous; light brownish gray; very fine grained; fresh; strong; hard; w/stylolites; (Bass Islands Group).	Below 29.0' continued w/ triple tube wire line core barrel w/diamond bit using water as drilling fluid. Water Level @ 13.6' on 07/10/07. No drilling fluid return @ 29.0'.
														33		548		0°,B,N,UK,Pa,PI @ 32.8'	
														34		547		pitted to vuggy @ 33.9-35.0'	
														35		546		0°,B,N,UK,Pa,PI @ 35.0' 80°,J,N,Ca,PI,SR @ 35.0-35.8' 90°,J,T,UK,PI @ 35.6'	Core box #1 starts @ 29.0'. 100% drilling fluid return @ 30.5'.
										36.0				36		545			
							PQ	3	4.2	4.2	4.0	100	95	37		544		10°,B,VN,UK,Sp,PI,SR @ 36.4'	No drilling fluid return @ 36.5'.
														38		543			
														39		542		10°,B,VN,UK,Sp,PI,SR @ 38.5'	Core box #2 starts @ 38.5'.
																541		10°,B,VN,UK,Sp,PI,SR @ 39.1'	
										40.2				40					
							PQ	4	0.8	0.8	0.0	100	0	41		540			Core barrel blocked @ 40.8'.
										41.0						539			
														42		538			
							PQ	5	5.0	5.0	3.2	100	64	43		537		10°,B,N,UK,Sp,PI,R @ 42.9' Two 90° Joints,T,No,No,St,VR closely spaced parallel @ 40.2-43.0' 90°,J,T,No,No,St,VR closely spaced parallel @ 43.2-46.0'	
														44		536		10°,B,N,UK,Sp,PI,R @ 43.9' 10°,B,N,UK,Sp,PI,R @ 44.1'	
														45					

BLACK & VEATCH

BORING LOG

BORING NO. TB-C5
SHEET 4 OF 32

CLIENT	PROJECT	PROJECT NO.
Detroit Edison	Fermi 3 COL Application	147483

PROJECT LOCATION	COORDINATES	GROUND ELEVATION (DATUM)	TOTAL DEPTH
Monroe, MI	N 6677.7' E 4592.8'	580.8 ft (NAVD 88)	471.1 (feet)

SURFACE CONDITIONS	COORDINATE SYSTEM	DATE START	DATE FINISHED
Parking area near propane tanks	Plant	06/21/07	07/18/07

LOGGED BY	CHECKED BY	APPROVED BY
TB GLO for Bonnie/Grainger	TB for Dogbey/Bonnie	Meyer

SAMPLING							CORING									
SAMPLE TYPE	SAMPLE NUMBER	SET 6 INCHES	2ND 6 INCHES	3RD 6 INCHES	N VALUE	SAMPLE RECOVERY	CORE SIZE	RUN NUMBER	RUN LENGTH	RUN RECOVERY	RQD RECOVERY	PERCENT RECOVERY	RQD	DEPTH (FEET)	SAMPLE TYPE	ELEVATION (FEET)	GRAPHIC LOG	CLASSIFICATION OF MATERIALS	REMARKS
														45				90°,J,T,Ca,Pa to Fi, St,VR @ 44.9-46.9'	
																535		10°,B,N,UK,Sp,Pl,R @ 45.5'	
										46.0				46				46.2	
																534		DOLOMITE; crystalline; banded, gray & dark gray; micritic; fresh; strong; hard; w/stylolites; (Bass Islands Group).	Drill chatter @ 46.5-47.5'.
														47				90°,J,T,Ca,Pa to Fi, St,VR @ 47.5-49.6'	
																533		0°,B,T,UK,Fi,Pl @ 47.4',47.6',47.9'	Core box #3 starts @ 47.4'.
														48					
PQ	6	5.0							5.0	5.0	3.2	100	64			532		0°,B,T,UK,Fi,Pl @ 48.7'	
														49					
																531			
														50				¼" black shale seam @ 50.5'	
																		50.5	
										51.0				51		530		DOLOMITE; argillaceous; dark gray; slightly weathered; strong; hard; thick bedded; vuggy; w/stylolites & weathered vugs; (Bass Islands Group).	
																529		0°,B,Ma,Fi,Pl,R @ 51.0'	
														52				70°,J,VN,No,No,Pl,R @ 51.6-52.6'	
																		0°,B,Ma,Fi,Pl,R @ 52.1'	
														53		528		0°,B,Ma,Fi,Pl,R @ 52.8'	
PQ	7	5.0							5.0	5.0	3.1	100	62			527			
														54				closely spaced vertical joints @ 54.2-59.4'	
																		0°,B,Ma,Fi,Pl,R @ 54.2'	
																526		0°,B,Ma,Fi,Pl,R @ 54.7'	
														55				0°,B,Ma,Fi,Pl,R @ 55.3'	
																		0°,B,Ma,Fi,Pl,R @ 55.6'	
																525			
										56.0				56				56.0	
																		DOLOMITE; crystalline; light brownish gray; micritic; fresh; moderately strong; hard; w/stylolites; (Bass Islands Group).	Core box #4 starts @ 56.0'.
														57		524		contorted, highly fractured fractures filled with ahydrite @ 56.0-59.4'	
																		crystal-filled vugs @ 56.0' & 57.5'	
														58		523			
PQ	8	5.0							5.0	5.0	3.0	100	60						
														59		522			
														60		521			

BLACK & VEATCH

BORING LOG

BORING NO. TB-C5

CLIENT	PROJECT	PROJECT NO.
Detroit Edison	Fermi 3 COL Application	147483

PROJECT LOCATION	COORDINATES	GROUND ELEVATION (DATUM)	TOTAL DEPTH
Monroe, MI	N 6677.7' E 4592.8'	580.8 ft (NAVD 88)	471.1 (feet)

SURFACE CONDITIONS	COORDINATE SYSTEM	DATE START	DATE FINISHED
Parking area near propane tanks	Plant	06/21/07	07/18/07

LOGGED BY	CHECKED BY	APPROVED BY
TB for Bonnie/Grainger	Dogbey/Bonnie TB	Meyer

SAMPLING							CORING									
SAMPLE TYPE	SAMPLE NUMBER	SET 6 INCHES	2ND 6 INCHES	3RD 6 INCHES	N VALUE	SAMPLE RECOVERY	CORE SIZE	RUN NUMBER	RUN LENGTH	RUN RECOVERY	RQD RECOVERY	PERCENT RECOVERY	RQD	DEPTH (FEET)	SAMPLE TYPE	ELEVATION (FEET)	GRAPHIC LOG	CLASSIFICATION OF MATERIALS	REMARKS
														60		520			
										61.0				61					Water level @ 14.0' prior to drilling on 06/11/07.
														62		519			
																		62.4	
														63		518		DOLOMITE; oolitic; light brownish gray; very fine grained; fresh; very strong; hard; massive; (Bass Islands Group). 60°,J,T,No,No,Pl,R @ 63.0' 0.05" thick, very dark gray shale parting @ 62.4'	
PQ	9	5.0	5.0	4.5	100	90								64		517			
																		bedding convoluted @ 64.9-65.5'	
														65		516		64.9 DOLOMITE; white; micritic; fresh; very strong; hard; medium bedded; interbedded w/argillaceous, very dark gray partings; (Bass Islands Group). 60°,J,T,No,No,Pl,R @ 64.9'	Core box #5 starts @ 65.5'.
										66.0				66		515		65.5 SHALE; very dark gray; platy; very fine grained; fresh; moderately strong; low hardness; (Bass Islands Group).	
														67		514		65.7 DOLOMITE; white; micritic; fresh; very strong; hard; medium bedded; interbedded w/argillaceous, very dark gray partings; (Bass Islands Group). bedding convoluted @ 66.8-67.8'	
PQ	10	5.0	4.9	4.3	98	86								68		513			
														69		512		0.01" thick black shale parting @ 67.4'	
														70		511		0°,B,VN,UK,Pa,Pl,Sp @ 67.8',68.4',68.5',69.4',69.8'	
																		0°,B,VN,UK,Pa,Pl,Sp @ 70.3' 90°,J,T,H,VR @ 70.3-70.8'	
										71				71		510			Run PQ-11: Lost 1' of core; went back in & recovered to get result shown.
														72		509		20°,J,N,No,No,St,VR @ 71.5'	
																		0°,B,MW,No,No,Pl,R (weathered) @ 72.0'	
														73		508			
																		73.2 DOLOMITE; crystalline; light brownish gray; micritic; fresh; extremely strong; hard; massive w/closely spaced stylolites; (Bass Islands Group). 50°,J (weathered) @ 73.3'	
PQ	11	5.0	4.9	4.9	98	98								74		507			
																		50°,J,T,Ca,Fi,Pl,SR @ 74.7',74.8'	
														75		506			

BLACK & VEATCH

BORING LOG

BORING NO. TB-C5

CLIENT	PROJECT	PROJECT NO.
Detroit Edison	Fermi 3 COL Application	147483

PROJECT LOCATION	COORDINATES	GROUND ELEVATION (DATUM)	TOTAL DEPTH
Monroe, MI	N 6677.7' E 4592.8'	580.8 ft (NAVD 88)	471.1 (feet)

SURFACE CONDITIONS	COORDINATE SYSTEM	DATE START	DATE FINISHED
Parking area near propane tanks	Plant	06/21/07	07/18/07

LOGGED BY	CHECKED BY	APPROVED BY
TB Bonnie/Grainger	Dogbey/Bonnie TB	Meyer

SAMPLING							CORING							DEPTH (FEET)	SAMPLE TYPE	ELEVATION (FEET)	GRAPHIC LOG	CLASSIFICATION OF MATERIALS	REMARKS
SAMPLE TYPE	SAMPLE NUMBER	SET 6 INCHES	2ND 6 INCHES	3RD 6 INCHES	N VALUE	SAMPLE RECOVERY	CORE SIZE	RUN NUMBER	RUN LENGTH	RUN RECOVERY	RQD RECOVERY	PERCENT RECOVERY	RQD						
														75		505			
			76.0											76					Core box #6 starts @ 76.0'.
							PQ	12	4.6	5.0	5.0	100	100	77		504			
														78		503			
														79		502			
														80		501			
			80.4				PQ	13	0.6	0.6	0.6	100	100			500			core barrel jammed @ 80.4', barrel full.
			81.0											81		499			
														82				0°,B,N,UK,Sp,WA,SR @ 82.0'	
														83		498		0°,B,N,UK,Sp,WA,SR @ 83.0'	
							PQ	14	5.0	5.0	3.7	100	74					weathered soft clay seam @ 83.3-83.5'	clay seam @ 83.5' temporarily blocked water
														84		497		0°,B,MW,Cl,Sp,SR (weathered) @ 83.7' 0°,B,MW,Cl,Sp,SR (weathered) @ 83.8'	
														85		496		50°,J,VN,No,No,Pl,R @ 85.0'	Core box #7 starts @ 84.5'.
																495		0°,B,MW,Cl,Sp,SR (weathered) @ 85.1' 0°,B,MW,Cl,Sp,SR (weathered) @ 85.2'	
			86.0											86					Drill chatter @ 85.2'.
														87		494			
																493		87.5 SHALE; dolomitic w/shale interbeds; (Bass Islands Group). 50°,J,MW,Cl,Sp,WA (weathered) @ 87.5'	
							PQ	15	5.0	5.0	3.0	100	60	88				shale; black; platy @ 88.1-88.2' 0.05' soft weathered shale @ 88.5'	
														89		492		88.6 DOLOMITE; crystalline; light brownish gray; micritic; fresh; very strong; hard; massive; w/closely spaced healed near vertical fractures & occasional thin black	
														90		491			

BLACK & VEATCH

BORING LOG

BORING NO. TB-C5

CLIENT	PROJECT	PROJECT NO.
Detroit Edison	Fermi 3 COL Application	147483

PROJECT LOCATION	COORDINATES	GROUND ELEVATION (DATUM)	TOTAL DEPTH
Monroe, MI	N 6677.7' E 4592.8'	580.8 ft (NAVD 88)	471.1 (feet)

SURFACE CONDITIONS	COORDINATE SYSTEM	DATE START	DATE FINISHED
Parking area near propane tanks	Plant	06/21/07	07/18/07

LOGGED BY	CHECKED BY	APPROVED BY
TB Bonnie/Grainger	EM for Dogbey/Bonnie TB	EM Meyer

SAMPLING: SAMPLE TYPE	SAMPLE NUMBER	SET 6 INCHES	2ND 6 INCHES	3RD 6 INCHES	N VALUE	SAMPLE RECOVERY	CORING: CORE SIZE	RUN NUMBER	RUN LENGTH	RUN RECOVERY	RQD RECOVERY	PERCENT RECOVERY	RQD	DEPTH (FEET)	SAMPLE TYPE	ELEVATION (FEET)	GRAPHIC LOG	CLASSIFICATION OF MATERIALS	REMARKS
														90				shale seams & stylolites; (Bass Islands Group).	
										91.0				91		490			
														92		489		¼" black shale parting @ 92.5'	Core box #8 starts @ 92.0'.
														93		488			
							PQ	16	5.0	5.0	3.0	100	60			487		10°,B,MW,Cl,Sp,Pl,R (weathered) @ 93.1' 90°,J,T,No,No,Ir,VR @ 93.1-94.0'	
														94		486			
														95				10°,B,MW,Cl,Sp,Pl,R (weathered) @ 94.5' ¼" black shale parting @ 94.8'	
														96		485			
										96.0						484		irregular, very dark gray dolomite inclusion @ 97.0'	
														97		483			
														98		482		97.9 DOLOMITE; crystalline; dark gray; micritic; fresh; very strong; hard; medium bedded; w/argillaceous seams & partings; (Bass Islands Group). 0°,B,MW,No,Pl,R (weathered) @ 98.0' contorted bedding deformation @ 98.8-99.1'	
							PQ	17	5.0	5.2	4.8	100	98						
														99		481			
														100		480			
										101.0				101		479		0°,B,N,Cl,Pa,WA (weathered) @ 101.0'	
														102		478		fractured @ 101.6-101.7' 0°,B,N,Cl,Pa,WA (weathered) @ 101.7' 80°,J,T,No,No,Pl,R @ 102.0' fractured @ 102.2'-102.4' 0°,B,N,Cl,Pa,WA (weathered) @ 102.4'	Core box #9 starts @ 102.4'.
														103		477		0°,B,N,Cl,Pa,WA (weathered) @ 102.7' fractured @ 102.8-103.5'	
							PQ	18	5.0	4.9	2.4	98	48	104		476		0°,B,N,Cl,Pa,WA (weathered) @ 103.5'	
														105				90°,J,T,H,Ir,P @ 104.5-106.0'	

BLACK & VEATCH

BORING LOG

BORING NO. TB-C5

CLIENT	PROJECT	PROJECT NO.
Detroit Edison	Fermi 3 COL Application	147483

PROJECT LOCATION	COORDINATES	GROUND ELEVATION (DATUM)	TOTAL DEPTH
Monroe, MI	N 6677.7' E 4592.8'	580.8 ft (NAVD 88)	471.1 (feet)

SURFACE CONDITIONS	COORDINATE SYSTEM	DATE START	DATE FINISHED
Parking area near propane tanks	Plant	06/21/07	07/18/07

LOGGED BY	CHECKED BY	APPROVED BY
TB GCO for Bonnie/Grainger	EM for Dogbey/Bonnie TB	EM Meyer

SAMPLING: SAMPLE TYPE, SAMPLE NUMBER, SET 6 INCHES, 2ND 6 INCHES, 3RD 6 INCHES, N VALUE, SAMPLE RECOVERY

CORING: CORE SIZE, RUN NUMBER, RUN LENGTH, RUN RECOVERY, RQD RECOVERY, PERCENT RECOVERY, RQD

SAMPLE TYPE	SAMPLE NUMBER	SET 6 INCHES	2ND 6 INCHES	3RD 6 INCHES	N VALUE	SAMPLE RECOVERY	DEPTH (FEET)	ELEVATION (FEET)	CLASSIFICATION OF MATERIALS	REMARKS
							105		0°,B,N,Cl,Pa,WA (weathered) @ 105.0',105.2'	
								475	0°,B,N,Cl,Pa,WA (weathered) @ 105.6'	
			106.0				106		90°,J,T,H,Ir @ 106.0-107.2'	
									0°,B,N,No,No,Pl,R (weathered) @ 106.2'	
							107	474		
								473	0°,B,N,No,No,Pl,R (weathered) @ 107.7'	
							108			
PQ	19	5.0	5.0	2.7	100	58			90°,J,T,H,Ir @ 108.5-109.5'	
							109	472	0°,B,N,No,No,Pl,R (weathered) @ 109.0'	
									0°,B,N,No,No,Pl,R (weathered) @ 109.3'	
								471	60°,J,T,No,No,Pl,SR @ 109.5',109.6'	
							110			
								470	70°,J,T,H,Ir @ 110.5-111.0'	
			111.0				111			
								469		
							112		0°,B,MW,Ca,Fi,Pl @ 111.9'	Core box #10 starts @ 111.9'.
									80°,J,Ca,Fi,Pl,R @ 112.3'	
								468	80°,J,W (weathered) @ 112.5'	
							113		0°,B,W,Cl,Fi (weathered) @ 112.6',112.8'	
PQ	20	5.0	5.0	3.7	100	74			30°,J,N,No,No,Pl,R @ 113.4', 113.5'	
								467	113.5	
							114		DOLOMITE; crystalline; dark grayish brown; micritic; fresh; very strong; hard; massive; w/pits & argillaceous seams; (Bass Islands Group).	
								466	30°,J,N,No,Pl,R @ 113.6'	
							115		90°,J,T,Ca,Pa,Pl,R @ 114.2-115.2'	
									30°,J,N,No,Pl,R @ 114.2'	
									60°,J,N,No,No,Pl,R @ 115.3-116.0'	
								465		
			116.0				116		80°,J,N,Ca,Fi,Pl @ 116.0-116.9'	
									0°,B,W,Cl,Fi @ 116.0'	
									45°,J,W,Cl,Fi @ 116.2'	
							117	464	brecciated, healed @ 116.6-117.9',118.5-119.6'	
								463		
							118		0°,B,W,Cl,Fi @ 118.0'	
PQ	21	5.0	5.0	3.8	100	76				
							119	462		
									80°,J,N,Ca,Fi,Pl @ 119.5-121.0'	
							120	461		

BORING LOG

CLIENT	PROJECT	PROJECT NO.
Detroit Edison	Fermi 3 COL Application	147483

PROJECT LOCATION	COORDINATES	GROUND ELEVATION (DATUM)	TOTAL DEPTH
Monroe, MI	N 6677.7' E 4592.8'	580.8 ft (NAVD 88)	471.1 (feet)

SURFACE CONDITIONS	COORDINATE SYSTEM	DATE START	DATE FINISHED
Parking area near propane tanks	Plant	06/21/07	07/18/07

LOGGED BY	CHECKED BY	APPROVED BY
TB Bonnie/Grainger	Dogbey/Bonnie TB	Meyer

SAMPLING							CORING									
SAMPLE TYPE	SAMPLE NUMBER	SET 6 INCHES	2ND 6 INCHES	3RD 6 INCHES	N VALUE	SAMPLE RECOVERY	CORE SIZE	RUN NUMBER	RUN LENGTH	RUN RECOVERY	RQD RECOVERY	PERCENT RECOVERY	RQD	DEPTH (FEET)	SAMPLE TYPE	ELEVATION (FEET)	GRAPHIC LOG	CLASSIFICATION OF MATERIALS	REMARKS
														120					
																460		45°,J,W,Cl,Fi @ 120.6'	
										121.0				121				80°,J,N,No,No,Pl,SR @ 121.0-121.7',121.3-121.9'	Core box #11 starts @ 121.3'.
																		121.3	
																459		DOLOMITE; crystalline; gray; micritic; fresh; very strong; very hard; interbedded w/dark gray, argillaceous dolomite, fresh to slightly weathered & shale partings; (Salina Group - Unit F).	
														122				80°,J,N,No,No,Pl,SR @ 121.6-122.2'	
																458		fractured along bedding @ 122.0-123.1'	
														123					
							PQ	22	5.0	4.6	0.0	92	0			457		0.1" thick shale parting @ 122.3'	
																		fractured along bedding @ 123.4-123.7'	
														124				fractured along bedding @ 124.0-124.2'	
																456			Water level @ 11.2' on 07/12/07.
														125				fractured along bedding @ 124.8-125.3'	
																455		90°,J,N,No,No,Ir,VR @ 122.3-123.7',124.8-125.3'	
														126				126.0	
										126.0						454		DOLOMITE; shaley; interbedded w/DOLOMITE; argillaceous; gray & light brownish gray; very fine grained; slightly weathered; weak to moderately strong; moderately hard; banded w/anhydrite bands & fillings along bedding; (Salina Group - Unit F).	Core loss @ 126.3', 128.2', 129.8'.
														127				0°,B,MW,No,No,Pl (weathered) @ 126.4',126.9', 127.2',127.7'	
																453		30°,J,N,No,No,Pl,R @ 127.2'	
														128				90°,J,N,No,No,Pl,R @ 128.0-128.8'	
							PQ	23	5.0	4.0	1.0	80	20			452		0°,B,MW,No,No,Pl (weathered) @ 128.5'	
														129				0°,B,MW,No,No,Pl (weathered) @ 128.8'	
																451			
														130					
																450			
										131.0				131				0°,B,MW,No,No,Pl (weathered) @ 130.9'	Core box #12 starts @ 131.0'.
																449			
														132					
																448		132.5	
														133				LIMESTONE; crystalline; dark gray; very fine grained; slightly weathered; medium strong; medium hard; w/ thin clay seams; (Salina Group - Unit F).	
							PQ	24	5.0	2.9	0.0	58	0			447		0°,B,MW,No,No,Pl (weathered) @ 133.9'	
														134				clay seams @ 134.7',135.1',136.0'	
																446		0°,B,MW,No,No,Pl (weathered) @ 134.5'	
														135					

BLACK & VEATCH

BORING LOG

BORING NO. TB-C5
SHEET 10 OF 32

CLIENT	PROJECT	PROJECT NO.
Detroit Edison	Fermi 3 COL Application	147483

PROJECT LOCATION	COORDINATES	GROUND ELEVATION (DATUM)	TOTAL DEPTH
Monroe, MI	N 6677.7' E 4592.8'	580.8 ft (NAVD 88)	471.1 (feet)

SURFACE CONDITIONS	COORDINATE SYSTEM	DATE START	DATE FINISHED
Parking area near propane tanks	Plant	06/21/07	07/18/07

LOGGED BY	CHECKED BY	APPROVED BY
TB Bonnie/Grainger	Dogbey/Bonnie TB	Meyer

SAMPLING							CORING									
SAMPLE TYPE	SAMPLE NUMBER	SET 6 INCHES	2ND 6 INCHES	3RD 6 INCHES	N VALUE	SAMPLE RECOVERY	CORE SIZE	RUN NUMBER	RUN LENGTH	RUN RECOVERY	RQD RECOVERY	PERCENT RECOVERY	RQD	DEPTH (FEET)	ELEVATION (FEET)	GRAPHIC LOG	CLASSIFICATION OF MATERIALS	REMARKS
														135	445		0°,B,MW,No,No,Pl (weathered) @ 135.4'	
										136.0				136			136.0	
															444		CLAYSTONE; dolomitic; gray; slightly weathered; weak to moderately strong; moderately hard; w/layers of crystalline limestone & dolomite; (Salina Group - Unit F).	
														137			fractured w/closely spaced vertical joints & beddings @ 136.0-137.7'	
															443		20°,J,N,Ca,Fi,Pl @ 137.9'	
							PQ	25	5.0	4.5	0.8	90	16	138			0°,B,N,Ca,Fi,Pl @ 138.0',138.2'	
															442		0°,B,N,Ca,Fi,Pl @ 138.4'	
														139			0°,B,N,Ca,Fi,Pl @ 138.9',139.1'	
															441		limestone layers @ 139.4-139.8'	
														140			limestone layers @ 140.5-142.2'	
										141.0				141	440		0°,B,N,No,Pl,R @ 141.3'	
															439		142.2	
														142			DOLOMITE; crystalline; gray; micritic; fresh; moderately strong; fractured; (Salina Group - Unit F).	Core box #13 starts @ 142.2'.
															438		0°,B,weathered clay seams @ 142.4',143.5'	
														143			90°,J,N,No,No,Pl,R @ 142.6-143.5'	
							PQ	26	5.0	3.0	0.0	60	0		437		60°,J,N,No,No,Pl,R @ 143.0'	Soft drilling @ 143.5-146.0'; core losses.
														144			0°,B,N,No,Pl,R @ 142.8',142.9',143.3'	
															436		143.5	
														145			CLAYSTONE; dolomitic; gray; slightly weathered; moderately strong; moderately hard; highly fractured; w/layers or seams of vuggy limestone; (Salina Group - Unit F).	
															435		90°,J,N,No,No,Pl,R @ 146.0-146.8'	
										146.0				146				
															434		0°,B,N,No,No,Pl,R @ 146.8',146.9',147.0'	
														147			90°,J,N,No,No,Pl,R @ 147.1-147.6'	
															433		40°,J,N,No,No,Pl,R @ 147.4',147.7'	
							PQ	27	5.0	3.5	0.0	70	0	148			0°,B,N,No,No,Pl,R @ 147.7'	
															432		40°,J,N,No,No,Pl,R @ 148.0',148.2'	
														149			90°,J,N,No,No,Pl,R @ 148.0-148.8'	
															431		0°,B,N,No,No,Pl,R @ 148.8'	
														150			soft weathered zone @ 149.5-156.0'	

BLACK & VEATCH

BORING LOG

BORING NO. TB-C5

SHEET 11 OF 32

CLIENT	PROJECT	PROJECT NO.
Detroit Edison	Fermi 3 COL Application	147483

PROJECT LOCATION	COORDINATES	GROUND ELEVATION (DATUM)	TOTAL DEPTH
Monroe, MI	N 6677.7' E 4592.8'	580.8 ft (NAVD 88)	471.1 (feet)

SURFACE CONDITIONS	COORDINATE SYSTEM	DATE START	DATE FINISHED
Parking area near propane tanks	Plant	06/21/07	07/18/07

LOGGED BY	CHECKED BY	APPROVED BY
TB LCC for Bonnie/Grainger	EB for TB Dogbey/Bonnie	Em Meyer

SAMPLING							CORING									
SAMPLE TYPE	SAMPLE NUMBER	SET 6 INCHES	2ND 6 INCHES	3RD 6 INCHES	N VALUE	SAMPLE RECOVERY	CORE SIZE	RUN NUMBER	RUN LENGTH	RUN RECOVERY	RQD RECOVERY	PERCENT RECOVERY	RQD	DEPTH (FEET)	SAMPLE TYPE	ELEVATION (FEET)	GRAPHIC LOG	CLASSIFICATION OF MATERIALS	REMARKS
														150		430			
														151				0°,B,N,No,No,Pl,SR @ 151.2',151.3'	
										151.0						429		0°,B,N,No,No,Pl,SR @ 151.6'	
														152				0°,B,N,No,No,Pl,SR @ 152.1',152.4',152.6'	
																428		152.6	
														153				LIMESTONE; vuggy; clayey; (Salina Group - Unit F).	
																427		153.1	
PQ	28	5.0	4.9	1.7	98	34								154				CLAYSTONE; dolomitic; gray; slightly weathered; moderately strong; moderately hard; highly fractured; w/layers or seams of vuggy limestone; (Salina Group - Unit F).	
																426		153.6	
														155				LIMESTONE: vuggy; clayey; (Salina Group - Unit F). 0°,B,N,No,No,Pl,SR @ 153.6',154.1'	
																425		154.1	
														156				CLAYSTONE; dolomitic; gray; slightly weathered; moderately strong; moderately hard; highly fractured; w/layers or seams of vuggy limestone; (Salina Group - Unit F). 0°,B,N,No,No,Pl,SR @ 154.5'	Core box #14 starts @ 156.0'.
										156.0						424		155.0	
														157				LIMESTONE; vuggy; clayey; (Salina Group - Unit F).	
																423		155.7	
PQ	29	5.0	4.8	1.8	96	36								158				CLAYSTONE; dolomitic; gray; slightly weathered; moderately strong; moderately hard; highly fractured; w/layers or seams of vuggy limestone; (Salina Group - Unit F). 0°,B,N,No,No,Pl,SR @ 156.2',156.7',157.1',157.5' vuggy clayey limestone seams @ 156.2-156.6',157.0-157.3'	
																422		158.0	
														159				CLAYSTONE; calcareous; dark gray; fresh; moderately strong; moderately hard; medium bedded; (Salina Group - Unit F). vuggy clayey limestone seams @ 158.1-158.2',159.1-159.3' contorted bedding @ 158.5-159.1'	Discrete sample 14A taken from PQ29 @ 160.3-161.0'.
														160		421			
														161		420		0°,B,N,No,No,Pl,SR @ 161.1'	
										161.0								0°,B,N,No,No,Pl,SR @ 161.5'	
														162		419		0°,B,N,No,No,Pl,SR @ 162.0'	
																418		162.4	
														163				BRECCIA; well indurated; dark gray; matrix of claystone & dolomite; micritic w/clasts of angular to rounded light brownish gray & gray claystone & micritic dolomite; (Salina Group - Unit F).	
PQ	30	5.0	5.0	2.8	100	56										417			Core box #15 starts @ 164.6'.
														164					
														165		416			

BLACK & VEATCH

BORING LOG

BORING NO. TB-C5

CLIENT	PROJECT	PROJECT NO.
Detroit Edison	Fermi 3 COL Application	147483

PROJECT LOCATION	COORDINATES	GROUND ELEVATION (DATUM)	TOTAL DEPTH
Monroe, MI	N 6677.7' E 4592.8'	580.8 ft (NAVD 88)	471.1 (feet)

SURFACE CONDITIONS	COORDINATE SYSTEM	DATE START	DATE FINISHED
Parking area near propane tanks	Plant	06/21/07	07/18/07

LOGGED BY	CHECKED BY	APPROVED BY
TB GCC for Bonnie/Grainger	Emfor Dogbey/Bonnie TB	Em Meyer

SAMPLING							CORING							DEPTH (FEET)	SAMPLE TYPE	ELEVATION (FEET)	GRAPHIC LOG	CLASSIFICATION OF MATERIALS	REMARKS
SAMPLE TYPE	SAMPLE NUMBER	SET 6 INCHES	2ND 6 INCHES	3RD 6 INCHES	N VALUE	SAMPLE RECOVERY	CORE SIZE	RUN NUMBER	RUN LENGTH	RUN RECOVERY	RQD RECOVERY	PERCENT RECOVERY	RQD						
														165		415			
										166.0				166				contorted bedding @ 166.2-168.4'	
														167		414			
														168		413			
							PQ	31	5.0	5.0	1.4	100	28					168.4	
														169		412		DOLOMITE; crystalline; gray; micritic; fresh; strong; hard; w/zones of indurated breccia & contorted bedding; (Salina Group - Unit F).	
														170		411		30°,J,W,Ca,Fi,Ir @ 168.6' 10°,J,N,No,No,Pl,R @ 168.8',168.9',169.4' 90°,J,N,No,No,Pl,R @ 168.8-169.6',169.6-170.3' 60°,J,N,No,No,Pl,R @ 170.0'	
														171		410			
										171.0								171.5	
														172		409		BRECCIA; indurated; (Salina Group - Unit F).	
																		172.5	
														173		408		DOLOMITE; crystalline; gray; micritic; fresh; strong; hard; w/zones of indurated breccia & contorted bedding; (Salina Group - Unit F).	
							PQ	32	5.0	5.0	1.5	100	30					173.6	
														174		407		BRECCIA; indurated; (Salina Group - Unit F).	
																		174.0	
														175		406		DOLOMITE; crystalline; gray; micritic; fresh; strong; hard; w/zones of indurated breccia & contorted bedding; (Salina Group - Unit F).	Core box #16 starts @ 174.1' .
														176		405			
										176.0								highly fractured w/closely spaced joints @ 175.5-176.9'	
														177		404		176.9	
																		BRECCIA; gray; matrix of claystone & dolomite; w/ sand to gravel size clasts (angular); cemented w/ calcite; fresh; moderately strong; low hardness; w/ zones of sand-size fragments; (Salina Group - Unit F).	
														178		403			
							PQ	33	5.0	5.0	1.0	100	20						Discrete sample 16A taken from 178.7-179.3'.
														179		402			
														180		401			

BLACK & VEATCH

BORING LOG

BORING NO. TB-C5

CLIENT	PROJECT	PROJECT NO.
Detroit Edison	Fermi 3 COL Application	147483

PROJECT LOCATION	COORDINATES	GROUND ELEVATION (DATUM)	TOTAL DEPTH
Monroe, MI	N 6677.7' E 4592.8'	580.8 ft (NAVD 88)	471.1 (feet)

SURFACE CONDITIONS	COORDINATE SYSTEM	DATE START	DATE FINISHED
Parking area near propane tanks	Plant	06/21/07	07/18/07

LOGGED BY	CHECKED BY	APPROVED BY
TB GLO for Bonnie/Grainger	Em for Dogbey/Bonnie TB	Em Meyer

SAMPLING							CORING									
SAMPLE TYPE	SAMPLE NUMBER	SET 6 INCHES	2ND 6 INCHES	3RD 6 INCHES	N VALUE	SAMPLE RECOVERY	CORE SIZE	RUN NUMBER	RUN LENGTH	RUN RECOVERY	RQD RECOVERY	PERCENT RECOVERY	RQD	DEPTH (FEET)	SAMPLE TYPE	ELEVATION (FEET)	GRAPHIC LOG	CLASSIFICATION OF MATERIALS	REMARKS
														180					
														181		400			
			181.0															30°,J,W,No,No,Pl,VR @ 181.7',184.1'	
														182		399		182.0	
																		BRECCIA; clasts of indurated, light brownish gray, sand to cobble size, crystalline; micritic dolomite & soft light gray clay zones; (Salina Group - Unit F).	Soft drilling @ 182.0-184.0'.
														183		398			
PQ	34	5.0	5.0	0.0	100	0								184		397			Core box #17 starts @ 183.5'.
														185		396			
														186		395		186.0	
			186.0															BRECCIA; gray calcareous clay matrix w/light brownish gray & gray clasts; some clasts micritic dolomite; cemented; moderately hard; w/some limestone zones; (Salina Group - Unit F).	
														187		394		highly fractured, some soft clay @ 187.2-188.0'	
														188		393		60°,J,W,Cl,Fi,Pl @ 188.2'	
PQ	35	5.0	5.0	0.0	100	0								189		392		limestone zones @ 188.8-189.2'; 190.5-190.7' 60°,J,W,Cl,Fi,Pl @ 188.9'	
														190		391		soft zone @ 189.7-191.0'	
														191		390			Water level @ 9.9' prior to drilling on 07/13/07.
			191.0																
														192		389			
														193		388			
PQ	36	5.0	2.5	0.0	50	0								194		387			Soft drilling @ 194.0-196.0'.
														195		386			

BLACK & VEATCH

BORING LOG

BORING NO. TB-C5
SHEET 14 OF 32

CLIENT	PROJECT	PROJECT NO.
Detroit Edison	Fermi 3 COL Application	147483

PROJECT LOCATION	COORDINATES	GROUND ELEVATION (DATUM)	TOTAL DEPTH
Monroe, MI	N 6677.7' E 4592.8'	580.8 ft (NAVD 88)	471.1 (feet)

SURFACE CONDITIONS	COORDINATE SYSTEM	DATE START	DATE FINISHED
Parking area near propane tanks	Plant	06/21/07	07/18/07

LOGGED BY	CHECKED BY	APPROVED BY
TB Bonnie/Grainger	Dogbey/Bonnie TB	Meyer

SAMPLING							CORING							DEPTH (FEET)	SAMPLE TYPE	ELEVATION (FEET)	GRAPHIC LOG	CLASSIFICATION OF MATERIALS	REMARKS
SAMPLE TYPE	SAMPLE NUMBER	SET 6 INCHES	2ND 6 INCHES	3RD 6 INCHES	N VALUE	SAMPLE RECOVERY	CORE SIZE	RUN NUMBER	RUN LENGTH	RUN RECOVERY	RQD RECOVERY	PERCENT RECOVERY	RQD						
														195		385		195.8	
										196.0				196		384		BRECCIA; claystone fragments in claystone matrix; gray; fresh; weak; moderately hard; less brecciation with depth; (Salina Group - Unit F).	Core box #18 starts @ 196.0'.
														197		383		60° soft seams w/clay @ 196.1',196.9'	
							PQ	37	5.0	5.0	1.5	100	30	198		382		198.8	
														199		381		LIMESTONE; argillaceous; very fine grained; slightly weathered; moderately strong; moderately hard; (Salina Group - Unit F). 30°,B,VN,No,No,Fi,SR (weathered) @ 199.2-199.4'	
														200		380		199.4 LIMESTONE; crystalline; dark gray; micritic; fresh; strong; hard; vuggy; (Salina Group - Unit F).	
										201.0				201		379		30° weathered zones @ 200.0-200.2',200.6-200.7' solutioned, weathered & pitted @ 201.4-203.0'	
														202		378		30° weathered zones @ 202.7-203.0'	
														203		377		203.0 DOLOMITE; gray; micritic; fresh; strong; hard; (Salina Group - Unit F).	
							PQ	38	5.0	4.5	1.5	90	30	204		376		203.5 SHALE; gray; (Salina Group - Unit F). 203.6 BRECCIA; cemented; gray; calcareous claystone matrix w/claystone clasts; slightly weathered; moderately strong; moderately hard; w/soft clay seams; (Salina Group - Unit F).	
														205		375			
										206.0				206		374		60°,J,W,No,No,Ir,VR @ 204.5',206.0'	Core box #19 starts @ 206.0'.
														207		373			
							PQ	39	5.0	3.5	0.5	70	10	208		372		208.8 LIMESTONE; crystalline; dark gray; micritic; slightly weathered; moderately strong; moderately hard; (Salina Group - Unit F). 0°,B,solutioned & weathered @ 208.9'	
														209		371			
														210					

BLACK & VEATCH

BORING LOG

BORING NO. TB-C5

CLIENT	PROJECT	PROJECT NO.
Detroit Edison	Fermi 3 COL Application	147483

PROJECT LOCATION	COORDINATES	GROUND ELEVATION (DATUM)	TOTAL DEPTH
Monroe, MI	N 6677.7' E 4592.8'	580.8 ft (NAVD 88)	471.1 (feet)

SURFACE CONDITIONS	COORDINATE SYSTEM	DATE START	DATE FINISHED
Parking area near propane tanks	Plant	06/21/07	07/18/07

LOGGED BY	CHECKED BY	APPROVED BY
TB Bonnie/Grainger	Em for Dogbey/Bonnie TB	Em Meyer

SAMPLING							CORING										
SAMPLE TYPE	SAMPLE NUMBER	SET 6 INCHES	2ND 6 INCHES	3RD 6 INCHES	N VALUE	SAMPLE RECOVERY	CORE SIZE	RUN NUMBER	RUN LENGTH	RUN RECOVERY	RQD RECOVERY	PERCENT RECOVERY	RQD	DEPTH (FEET)	SAMPLE TYPE	ELEVATION (FEET)	GRAPHIC LOG

CLASSIFICATION OF MATERIALS	REMARKS
0°,B,solutioned & weathered @ 209.3',209.5',209.6', 209.7', 210.0'	
210.7	
BRECCIA; cemented; gray; crystalline limestone matrix; calcareous claystone & limestone clasts; w/ soft seams; (Salina Group - Unit F).	
212.6	
DOLOMITE; crystalline; grayish brown; micritic; slightly weathered; moderately strong; moderately hard; medium bedded; w/layers of crystalline vuggy limestone & fossils; (Salina Group - Unit F).	
0°,B,solutioned & weathered @ 213.0',213.2',213.4'	
90°,J,T,Ca,Fi,Ir @ 213.7-216.3'	
60°,J,T,Ca,Fi,Pl @ 214.9',215.0'	
0°,B,solutioned & weathered @ 215.3'	
	Core box #20 starts @ 216.0'.
limestone layer @ 216.6-217.3',217.5-217.8'	
10°,B,N,solutioned @ 216.8'	
10°,B,N,solutioned @ 217.3',217.4'	
10°,B,N,solutioned @ 217.8'	
limestone layer @ 218.0-218.3'	
10°,B,N,solutioned @ 218.4',218.9'	
20°,J,N,Ca,Fi,Pl,R @ 218.4',218.5'	
90°,J,N,Ca,Fi,Pl,R @ 218.5-218.9'	
218.9	
LIMESTONE; dark gray; slightly weathered; moderately strong; hard; vuggy; (Salina Group - Unit F).	
10°,B,N,solutioned @ 220.4'	
solutioned clay-filled zones @ 221.9-222.2'	
solutioned clay-filled zones @ 222.7-222.9'	
solutioned clay-filled zones @ 224.2-224.4'	
solutioned clay-filled zones @ 224.7-225.5'	

CORING							DEPTH (FEET)	ELEVATION (FEET)
			211.0				210	370
							211	
								369
							212	
								368
							213	
PQ	40	5.0	4.5	2.5	90	50		367
							214	
								366
							215	
								365
			216.0				216	
								364
							217	
								363
							218	
PQ	41	5.0	4.8	1.4	96	28		362
							219	
								361
							220	
								360
			221.0				221	
								359
							222	
								358
							223	
PQ	42	5.0	4.5	0.5	90	10		357
							224	
								356
							225	

BLACK & VEATCH

BORING LOG

BORING NO. TB-C5

CLIENT	PROJECT	PROJECT NO.
Detroit Edison	Fermi 3 COL Application	147483

PROJECT LOCATION	COORDINATES	GROUND ELEVATION (DATUM)	TOTAL DEPTH
Monroe, MI	N 6677.7' E 4592.8'	580.8 ft (NAVD 88)	471.1 (feet)

SURFACE CONDITIONS	COORDINATE SYSTEM	DATE START	DATE FINISHED
Parking area near propane tanks	Plant	06/21/07	07/18/07

LOGGED BY	CHECKED BY	APPROVED BY
TB Bonnie/Grainger	Eo for TB Dogbey/Bonnie	Eo Meyer

SAMPLING							CORING									
SAMPLE TYPE	SAMPLE NUMBER	SET 6 INCHES	2ND 6 INCHES	3RD 6 INCHES	N VALUE	SAMPLE RECOVERY	CORE SIZE	RUN NUMBER	RUN LENGTH	RUN RECOVERY	RQD RECOVERY	PERCENT RECOVERY	RQD	DEPTH (FEET)	SAMPLE TYPE	ELEVATION (FEET)	GRAPHIC LOG	CLASSIFICATION OF MATERIALS	REMARKS
														225		355			
														226				226.2	Core box #21 starts @ 226.0'. Core loss @ 226.0-227.0'.
			226.0													354		DOLOMITE; crystalline; light brownish gray; micritic; slightly weathered; weak; moderately hard; (Salina Group - Unit F). 70°,J,N,Ca,Fi,Pl,R @ 226.5-227.2',227.0-227.5' 0°,B,N,UK,Pl,R @ 226.7',227.0',227.3',227.6',227.8'	
														227					
																353			
														228				228.0	Core barrel jammed frequently @ 228.0-231.0'.
PQ	43	5.0	3.0	0.0	60	0										352		DOLOMITE; blocky; clayey; dark gray; micritic; highly weathered; very weak; friable; w/layers of vuggy crystalline limestone & micritic dolomite; (Salina Group - Unit F).	
														229					
														230		351			
																350			
			231.0											231				limestone @ 231.2-232.7'	
																349			
														232				0°,B (weathered) @ 232.0'	
																348		micritic dolomite @ 232.7-233.7'	
														233				30°,J,N,UK,Fi,Pl,SR @ 233.1'	
PQ	44	5.0	3.8	0.9	76	18										347		highly fractured @ 233.7-236.0'	
														234					
																346			
														235					
																345			
			236.0											236				vuggy limestone @ 236.5-236.9'	
																344			
														237				micritic dolomite @ 237.2-237.5',237.9-238.1'	
																343			
														238					
PQ	45	5.0	3.5	1.0	70	20										342		90°,J,N,No,No,Pl,R @ 238.3-239.7',237.3'	
														239					
																341		vuggy limestone @ 239.2-239.3',239.7-239.9' 50°,J,N,No,No,Ir,R @ 239.5'	Core box #22 starts @ 239.7'.
														240					

BLACK & VEATCH

BORING LOG

BORING NO. TB-C5

CLIENT	PROJECT	PROJECT NO.
Detroit Edison	Fermi 3 COL Application	147483

PROJECT LOCATION	COORDINATES	GROUND ELEVATION (DATUM)	TOTAL DEPTH
Monroe, MI	N 6677.7' E 4592.8'	580.8 ft (NAVD 88)	471.1 (feet)

SURFACE CONDITIONS	COORDINATE SYSTEM	DATE START	DATE FINISHED
Parking area near propane tanks	Plant	06/21/07	07/18/07

LOGGED BY	CHECKED BY	APPROVED BY
TB Bonnie/Grainger	Dogbey/Bonnie TB	Meyer

SAMPLING: SAMPLE TYPE	SAMPLE NUMBER	SET 6 INCHES	2ND 6 INCHES	3RD 6 INCHES	N VALUE	SAMPLE RECOVERY	CORING: CORE SIZE	RUN NUMBER	RUN LENGTH	RUN RECOVERY	RQD RECOVERY	PERCENT RECOVERY	RQD	DEPTH (FEET)	SAMPLE TYPE	ELEVATION (FEET)	GRAPHIC LOG	CLASSIFICATION OF MATERIALS	REMARKS
														240				50°,J,N,No,No,Ir,R @ 240.5'	
																340			
										241.0				241				0°,B,No,No,Pl (weathered) @ 241.4'	
																		241.4	
														242		339		BRECCIA; well indurated; gray; calcareous claystone matrix w/claystone clasts; micritic; slightly weathered; moderately strong; moderately hard; (Salina Group - Unit F).	
																		0°,B,No,No,Pl (weathered) @ 241.6',242.0'	
														243		338			
PQ	46	5.0	4.8	2.0	96	40										337			
														244				243.8	
																		LIMESTONE; dark gray; vuggy; slightly weathered; strong; hard; (Salina Group - Unit F).	
																336		solutioned @ 244.7-245.0'	
														245				20°,J,solutioned @ 245.5'	
																335		245.5	
																		DOLOMITE; light brownish gray; fresh; very strong; very hard; (Salina Group - Unit E).	
										246.0				246				246.0	
																334		DOLOMITE & LIMESTONE; interbedded; gray; slightly weathered; strong; hard; (Salina Group - Unit E).	
														247				0°,B,W,No,No,Pl (weathered) @ 246.1',246.5',246.6'	
																333		247.4	
														248				DOLOMITE; crystalline; very pale brown; slightly weathered; strong; hard; w/fossils & widely spaced stylolites; (Salina Group - Unit E).	
PQ	47	5.0	5.0	1.9	100	38										332		80°,J,N,Ca,Fi,Pl,R @ 247.4-247.9'	
														249				0°,B,N,No,No,Pl (weathered) @ 247.7',247.9',248.2', 248.7',248.9'	Core box #23 starts @ 248.9'.
																331		fractured along bedding @ 249.1-249.2'	
														250				0°,B,N,No,No,Pl (weathered) @ 249.9',250.2',250.3'	
																330		0°,B,N,No,No,Pl (weathered) @ 250.7'	
										251.0				251				0°,B,W,No,No,Pl @ 251.1',251.2',251.3',251.4'	
																329			
														252				10°,J,N,Ca,Fi,Pl @ 252.1',252.2',252.3',252.4'	
																328			
														253				0°,B,W,No,No,Pl @ 253.0',253.3'	
PQ	48	5.0	5.0	0.9	96	18												60°,J,N,No,Pl,R @ 253.0-253.5',253.3-254.5'	
																327			
														254					
																326		90°,J,T,No,Pl,R @ 254.5-256.0'	
														255					

BLACK & VEATCH

BORING LOG

BORING NO. TB-C5

CLIENT	PROJECT	PROJECT NO.
Detroit Edison	Fermi 3 COL Application	147483

PROJECT LOCATION	COORDINATES	GROUND ELEVATION (DATUM)	TOTAL DEPTH
Monroe, MI	N 6677.7' E 4592.8'	580.8 ft (NAVD 88)	471.1 (feet)

SURFACE CONDITIONS	COORDINATE SYSTEM	DATE START	DATE FINISHED
Parking area near propane tanks	Plant	06/21/07	07/18/07

LOGGED BY	CHECKED BY	APPROVED BY
TB, Geo for Bonnie/Grainger	Geo for Dogbey/Bonnie TB	Meyer EM

SAMPLING: SAMPLE TYPE	SAMPLE NUMBER	SET 6 INCHES	2ND 6 INCHES	3RD 6 INCHES	N VALUE	SAMPLE RECOVERY	CORING: CORE SIZE	RUN NUMBER	RUN LENGTH	RUN RECOVERY	RQD RECOVERY	PERCENT RECOVERY	RQD	DEPTH (FEET)	ELEVATION (FEET)	CLASSIFICATION OF MATERIALS	REMARKS
														255	325	0°,B,W,No,No,Pl @ 254.9' 0°,B,W,No,No,Pl @ 255.4'	
										256.0				256		soft zones along bedding @ 256.0-256.2', 256.6-256.9' 90°,J,VN,Ca,Fi,St @ 256.2-260.0'	Core box #24 starts @ 256.0' Core loss @ 256.0'-259.2'. Water level @ 11.9' prior to drilling on 07/14/07.
														257	324		
														258	323	soft zones along bedding @ 257.1-257.6'	
PQ	49	5.0	3.4	1.2	68	24								259	322	soft zones along bedding @ 257.9-258.2' soft zones along bedding @ 258.5-258.7' 20°,J,W,No,No,Pl @ 258.7', 259.2', 259.5'	
														260	321	0°,B,W,No,Pl,SR @ 259.5', 259.7', 260.5'	
										261.0				261	320		Core loss @ 261.0-263.7'.
														262	319		
														263	318		
PQ	50	5.0	1.9	0.0	38	0.0								264	317	263.7 DOLOMITE; banded; gray; micritic; fresh; moderately strong; moderately hard; thin bedded; (Salina Group - Unit E). 90°,J,T,No,No,Pl,R @ 263.7-265.6' 0°,B,N,No,No,Pl,R @ 263.9', 264.1' highly fractured along bedding @ 264.2-265.1'	
														265	316		
														266	315	0°,B,N,No,No,Pl,R @ 265.6'	
										266.0				267	314	highly fractured along bedding @ 266.0-267.4'	Core barrel jammed @ 266.0'.
														268	313	90°,J,N,No,No,Pl,R @ 267.4-268.2', 270.6-270.9' 0°,B,N,No,No,Pl,SR (closely banded) @ 267.5-267.9', 268.2-268.4', 268.8-268.9'	
PQ	51	5.0	4.0	1.6	80	32								269	312	pitted @ 268.2-268.5', 270.2-271.3'	
														270	311	0°,B,N,No,Pl,SR (closely banded) @ 269.3-269.4', 269.6-269.7'	

BLACK & VEATCH

BORING LOG

BORING NO. TB-C5

CLIENT	PROJECT	PROJECT NO.
Detroit Edison	Fermi 3 COL Application	147483

PROJECT LOCATION	COORDINATES	GROUND ELEVATION (DATUM)	TOTAL DEPTH
Monroe, MI	N 6677.7' E 4592.8'	580.8 ft (NAVD 88)	471.1 (feet)

SURFACE CONDITIONS	COORDINATE SYSTEM	DATE START	DATE FINISHED
Parking area near propane tanks	Plant	06/21/07	07/18/07

LOGGED BY	CHECKED BY	APPROVED BY
TB GLO for Bonnie/Grainger	Em for Dogbey/Bonnie TB	Em Meyer

SAMPLING: SAMPLE TYPE	SAMPLE NUMBER	SET 6 INCHES	2ND 6 INCHES	3RD 6 INCHES	N VALUE	SAMPLE RECOVERY

CORING: CORE SIZE	RUN NUMBER	RUN LENGTH	RUN RECOVERY	RQD RECOVERY	PERCENT RECOVERY	RQD
PQ	52	5.0	4.8	4.3	96	86
PQ	53	3.0	2.8	2.8	93	93
PQ	54	2.0	2.0	2.0	100	100
PQ	55	5.0	5.0	4.4	100	88

DEPTH (FEET)	SAMPLE TYPE	ELEVATION (FEET)	GRAPHIC LOG	CLASSIFICATION OF MATERIALS	REMARKS
270		310		60°,J,N,No,No,Pl,R @ 270.5'	
271		309		271.0 271.3 — ANHYDRITE; white to light gray; fresh; moderately strong; low hardness; interbedded w/DOLOMITE thin bands of light brownish gray, micritic; (Salina Group - Unit E).	Core box #25 starts @ 271.0'.
272		308			
273		307		273.0 — DOLOMITE; crystalline; light brownish gray; micritic; fresh; very strong; hard; thick bedded; w/stylolites; fossiliferous; (Salina Group - Unit E).	
274		306		274.0 — DOLOMITE; argillaceous; gray; micritic; fresh; very strong; hard; w/thin shale bands & stylolites; (Salina Group - Unit E).	Pulled up 10' to switch out 5' rods. Hole blocked @ 273.0'; drilled out blockage.
275		305			
276		304		276.0	
277		303		277.4 — DOLOMITE; light brownish gray; w/anhydrite seams; (Salina Group - Unit E). 277.7 — DOLOMITE; argillaceous; gray; micritic; fresh; very strong; hard; w/thin shale bands & stylolites; (Salina Group - Unit E). 0°,B,anhydrite,Fi,WA,S @ 278.3-278.7'	
278		302			
279		301		279.0 279.7 — DOLOMITE; pale yellowish brown; (Salina Group - Unit E).	Core barrel jammed @ 279.0'.
280		300		280.0 — DOLOMITE; argillaceous; gray; micritic; fresh; very strong; hard; w/thin shale bands & stylolites; (Salina Group - Unit E). 0°,J,VN,anhydrite,Fi,WA @ 281.3'	
281		299		281.0 281.4 — DOLOMITE; crystalline; light brownish gray; micritic; fresh; very strong; hard; w/anhydrite pockets along convoluted bedding & stylolites; (Salina Group - Unit E). 0°,J,VN,anhydrite,Fi,WA @ 281.5', 281.7' 0°,J,VN,anhydrite,Fi,WA @ 282.3', 283.0', 283.3', 283.5' 20°,J,VN,anhydrite,Fi,Pl @ 283.4'	Core box #26 starts @ 281.0'.
282		298			
283		297		283.6 — DOLOMITE; argillaceous; gray; micritic; fresh; very strong; hard; (Salina Group - Unit E). 0°,J,VN,anhydrite,Fi,WA @ 283.6', 284.3', 285.0'	
284		296			
285					

BLACK & VEATCH

BORING LOG

BORING NO. TB-C5

CLIENT	PROJECT	PROJECT NO.
Detroit Edison	Fermi 3 COL Application	147483

PROJECT LOCATION	COORDINATES	GROUND ELEVATION (DATUM)	TOTAL DEPTH
Monroe, MI	N 6677.7' E 4592.8'	580.8 ft (NAVD 88)	471.1 (feet)

SURFACE CONDITIONS	COORDINATE SYSTEM	DATE START	DATE FINISHED
Parking area near propane tanks	Plant	06/21/07	07/18/07

LOGGED BY	CHECKED BY	APPROVED BY
TB GCO Bonnie/Grainger	FM for Dogbey/Bonnie TB	FM Meyer

SAMPLING							CORING									
SAMPLE TYPE	SAMPLE NUMBER	SET 6 INCHES	2ND 6 INCHES	3RD 6 INCHES	N VALUE	SAMPLE RECOVERY	CORE SIZE	RUN NUMBER	RUN LENGTH	RUN RECOVERY	RQD RECOVERY	PERCENT RECOVERY	RQD	DEPTH (FEET)	SAMPLE TYPE	ELEVATION (FEET)	GRAPHIC LOG	CLASSIFICATION OF MATERIALS	REMARKS
														285		295			
														286		294		70°,J,N,anhydrite,Fi,Ir @ 286.4-287.4'	
														287		293		black shale @ 287.4-287.6' 0°,J,W,anhydrite,Fi,Pl @ 287.5'	
														288		292		287.8 DOLOMITE; argillaceous; light brownish gray; micritic; fresh; very strong; hard; fossiliferous; wavy bedding & w/stylolites; (Salina Group - Unit E). B,MW,anhydrite,Fi,WA @ 288.2', 288.4', 288.6'	
PQ	56	5.0	5.0	4.9	100	98								289		291			
														290		290			
														291		289		90°,J,VN,anhydrite,Fi,Ir @ 290.8-291.3' 70°,J,N,anhydrite,Fi,Ir @ 290.9-291.6'	Core box #27 starts @ 291.0'.
														292		288			
														293		287			
PQ	57	5.0	5.0	5.4	100	100								294		286			
														295		285		90°,J,VN,anhydrite,Fi,Ir @ 295.1-296.0'	
														296		284			
														297		283			
														298		282		90°,J,T,No,No,Ir @ 297.9-299.2'	
PQ	58	5.0	5.0	5.0	100	100								299		281			
														300				closely spaced stylolites @ 299.8-300.0'	

286.0

291.0

296.0

BLACK & VEATCH

BORING LOG

BORING NO. TB-C5

SHEET 21 OF 32

CLIENT	PROJECT	PROJECT NO.
Detroit Edison	Fermi 3 COL Application	147483

PROJECT LOCATION	COORDINATES	GROUND ELEVATION (DATUM)	TOTAL DEPTH
Monroe, MI	N 6677.7' E 4592.8'	580.8 ft (NAVD 88)	471.1 (feet)

SURFACE CONDITIONS	COORDINATE SYSTEM	DATE START	DATE FINISHED
Parking area near propane tanks	Plant	06/21/07	07/18/07

LOGGED BY	CHECKED BY	APPROVED BY
TB Bonnie/Grainger	RM for Dogbey/Bonnie TB	Meyer RM

SAMPLING							CORING									
SAMPLE TYPE	SAMPLE NUMBER	SET 6 INCHES	2ND 6 INCHES	3RD 6 INCHES	N VALUE	SAMPLE RECOVERY	CORE SIZE	RUN NUMBER	RUN LENGTH	RUN RECOVERY	RQD RECOVERY	PERCENT RECOVERY	RQD	DEPTH (FEET)	SAMPLE TYPE	ELEVATION (FEET)	GRAPHIC LOG	CLASSIFICATION OF MATERIALS	REMARKS
														300					Core box #28 starts @ 300.0'.
														301		280			
			301.0															90°,J,T,H,Fi,Ir @ 301.2-301.5'	
														302		279		20°,J,T,H,Fi,Pl @ 301.7'	
														303		278			
PQ	59	5.0	5.0	5.0	100	100												303.5	
														304		277		DOLOMITE; crystalline; dark grayish brown; micritic; fresh; very strong; very hard; massive w/argillaceous bands; convoluted bedding; anhydrite-filled pits & stylolites; (Salina Group - Unit E).	
														305		276			
														306		275		306.0	
			306.0															DOLOMITE; grayish brown & gray; convoluted bands & areas; (Salina Group - Unit E).	
														307		274		307.5	
														308		273		DOLOMITE; argillaceous; gray; interbedded; micritic; fresh; strong; hard; banded w/black shaley seams; (Salina Group - Unit E).	
PQ	60	5.0	5.0	5.0	100	100								309		272			
																		309.5	
														310		271		DOLOMITE; gray & very dark gray; micritic; fresh; very strong; hard; convoluted bedding; massive; (Salina Group - Unit E).	Core box #29 starts @ 309.6'.
														311		270			
			311.0															fractured along bedding plane @ 311.0-311.2'	
														312		269		311.2 DOLOMITE; argillaceous; gray; micritic; fresh; very strong; hard; w/shaley seams; (Salina Group - Unit E).	
														313		268		312.5 ANHYDRITE; white; micritic; fresh; weak; low hardness; interbedded w/hard; light brownish gray dolomite; (Salina Group - Unit E).	
PQ	61	5.0	5.0	4.9	100	98								314		267		313.8	
																		DOLOMITE; fossiliferous; light brownish gray; micritic; fresh; very strong; hard; (Salina Group - Unit E). 0°,B,N,anhydrite,Fi,Pl @ 313.9', 315.6'	
														315		266			

BLACK & VEATCH

BORING LOG

BORING NO. TB-C5

CLIENT	PROJECT	PROJECT NO.
Detroit Edison	Fermi 3 COL Application	147483

PROJECT LOCATION	COORDINATES		GROUND ELEVATION (DATUM)	TOTAL DEPTH
Monroe, MI	N 6677.7'	E 4592.8'	580.8 ft (NAVD 88)	471.1 (feet)

SURFACE CONDITIONS	COORDINATE SYSTEM	DATE START	DATE FINISHED
Parking area near propane tanks	Plant	06/21/07	07/18/07

LOGGED BY	CHECKED BY	APPROVED BY
TB Bonnie/Grainger	EM for Dogbey/Bonnie TB	EM Meyer

SAMPLING: SAMPLE TYPE, SAMPLE NUMBER, SET 6 INCHES, 2ND 6 INCHES, 3RD 6 INCHES, N VALUE, SAMPLE RECOVERY

CORING: CORE SIZE, RUN NUMBER, RUN LENGTH, RUN RECOVERY, RQD RECOVERY, PERCENT RECOVERY, RQD

SAMPLE TYPE	SAMPLE NUMBER	SET 6 INCHES	2ND 6 INCHES	3RD 6 INCHES	N VALUE	SAMPLE RECOVERY	DEPTH (FEET)	ELEVATION (FEET)	CLASSIFICATION OF MATERIALS	REMARKS
							315	265		
			316.0				316		316.1	
							317	264	DOLOMITE; argillaceous; gray; micritic; fresh; very strong; hard; w/black shale bands; (Salina Group - Unit E). highly fractured along bedding @ 316.2-316.4'	
							318	263	318.1	
PQ	62	5.0	5.0	4.8	100	96	319	262	ANHYDRITE; light gray to white; crystalline; fresh; weak; low hardness; w/convoluted bands & seams of light brownish gray dolomite; (Salina Group - Unit E). 30°,J,VN,No,No,St @ 318.4'	Core box #30 starts @ 318.2'.
							320	261		
							321	260		
			321.0				322	259		
							323	258	322.9	
PQ	63	5.0	5.0	5.0	100	100	324	257	DOLOMITE; light brownish gray & dark gray interbedded sequence; micritic; fresh; very strong; hard; w/partings of anhydrite; (Salina Group - Unit E).	
							325	256	324.1 DOLOMITE; interbedded dark gray & light gray; fresh; strong; hard; w/thin bands of anhydrite; (Salina Group - Unit E). 0°,B,VN,anhydrite,Fi,WA @ 324.5', 325.8', 326.9'	
							326	255		
			326.0				327	254	gray soft clay seam @ 326.2-326.4'	
							328	253	327.0 DOLOMITE; light brownish gray & light gray; micritic; fresh; strong; hard; interbedded w/anhydrite & shale partings; bedding contorted; (Salina Group - Unit E).	Core box #31 starts @ 327.6'.
PQ	64	5.0	4.9	4.8	98	96	329	252	30°,J,MW,anhydrite,Fi,PI @ 328.4', 328.5', 329.9'	
							330	251		

BLACK & VEATCH

BORING LOG

BORING NO. TB-C5
SHEET 23 OF 32

CLIENT	PROJECT	PROJECT NO.
Detroit Edison	Fermi 3 COL Application	147483

PROJECT LOCATION	COORDINATES	GROUND ELEVATION (DATUM)	TOTAL DEPTH
Monroe, MI	N 6677.7' E 4592.8'	580.8 ft (NAVD 88)	471.1 (feet)

SURFACE CONDITIONS	COORDINATE SYSTEM	DATE START	DATE FINISHED
Parking area near propane tanks	Plant	06/21/07	07/18/07

LOGGED BY	CHECKED BY	APPROVED BY
TB Bonnie/Grainger	SM for TB Dogbey/Bonnie	SM Meyer

SAMPLING							CORING									
SAMPLE TYPE	SAMPLE NUMBER	SET 6 INCHES	2ND 6 INCHES	3RD 6 INCHES	N VALUE	SAMPLE RECOVERY	CORE SIZE	RUN NUMBER	RUN LENGTH	RUN RECOVERY	RQD RECOVERY	PERCENT RECOVERY	RQD	DEPTH (FEET)	SAMPLE TYPE	ELEVATION (FEET)	GRAPHIC LOG	CLASSIFICATION OF MATERIALS	REMARKS
														330					
														331		250			
			331.0											332		249			
														333		248			
							PQ	65	5.0	5.0	5.0	100	100	334		247		SHALE; dolomitic; black; platy; fresh; strong; hard; (Salina Group - Unit E). 333.1	
														335		246		DOLOMITE; light brownish gray; micritic; fresh; strong; hard interbedded w/ANAHYDRITE; light gray; low hardness; massive; w/convoluted bedding black inclusions & partings; (Salina Group - Unit E) 334.0	
														336		245			
			336.0											337		244			Core box #32 starts @ 336.7'.
														338		243			
							PQ	66	5.0	5.0	5.0	100	100	339		242			
														340		241		0°,B,N,No,No,PI,SR @ 339.5'	
														341		240		CLAYSTONE; dolomitic; very dark gray; platy; strong; hard; w/anhydrite bands; (Salina Group - Unit C). 339.7	
			341.0											342		239		10°,J,MW,anhydrite,Fi @ 339.8' 0°,B,N,anhydrite,Fi @ 340.2', 340.8', 340.9'	
														343		238		0°,B,MW,anhydrite,Fi,PI @ 341.9'	
							PQ	67	5.0	5.0	5.0	100	100	344		237			
														345		236			

7/16/2008 2:54 PM DTE - Fermi 3 Geotech

BLACK & VEATCH

BORING LOG

BORING NO. TB-C5

CLIENT	PROJECT	PROJECT NO.
Detroit Edison	Fermi 3 COL Application	147483

PROJECT LOCATION	COORDINATES	GROUND ELEVATION (DATUM)	TOTAL DEPTH
Monroe, MI	N 6677.7' E 4592.8'	580.8 ft (NAVD 88)	471.1 (feet)

SURFACE CONDITIONS	COORDINATE SYSTEM	DATE START	DATE FINISHED
Parking area near propane tanks	Plant	06/21/07	07/18/07

LOGGED BY	CHECKED BY	APPROVED BY
TB Bonnie/Grainger	Em for TB Dogbey/Bonnie	Em Meyer

SAMPLING							CORING										
SAMPLE TYPE	SAMPLE NUMBER	SET 6 INCHES	2ND 6 INCHES	3RD 6 INCHES	N VALUE	SAMPLE RECOVERY	CORE SIZE	RUN NUMBER	RUN LENGTH	RUN RECOVERY	RQD RECOVERY	PERCENT RECOVERY	RQD	DEPTH (FEET)	SAMPLE TYPE	ELEVATION (FEET)	GRAPHIC LOG

CLASSIFICATION OF MATERIALS	REMARKS
0°,B,MW,anhydrite,Fi,Pl @ 346.7'	Core box #33 starts @ 346.0'.
anhydrite bands @ 348.1-348.2'	
0°,B,MW,anhydrite,Fi,Pl @ 348.8' anhydrite bands @ 349.1-349.2', 349.9'	
351.1 DOLOMITE; dark gray & black; micritic; fresh; very strong; hard; w/partings of olive black claystone & bands of anhydrite; (Salina Group - Unit C).	
0°,B,MW,anhydrite,Fi,Pl @ 352.4'	
354.5 CLAYSTONE; very dark gray; fresh; very strong; moderately hard; massive; w/interbedded gray to light brownish gray layers & patches of micritic dolomite & seams of anhydrite; (Salina Group - Unit C).	Core box #34 starts @ 354.8'.
356.3 DOLOMITE; (Salina Group - Unit C). 0°,B,MW,anhydrite,Fi,Pl @ 356.5'	Water level @ 25.1' prior to drilling on 07/10/07.
357.0 CLAYSTONE; very dark gray; fresh; very strong; moderately hard; massive; w/interbedded gray to light brownish gray layers & patches of micritic dolomite & seams of anhydrite; (Salina Group - Unit C). 0°,B,MW,anhydrite,Fi,Pl @ 357.1', 357.6' 10°,J,MW,anhydrite,Fi,Pl @ 357.4'	
359.4 DOLOMITE; (Salina Group - Unit C). 0°,B,MW,anhydrite,Fi,Pl @ 359.4'	

														345		235	
			346.0											346		234	
PQ	68	5.0	5.0	5.0	100	100								347		233	
														348		232	
														349		231	
														350		230	
			351.0											351		229	
PQ	69	5.0	4.8	4.7	96	94								352		228	
														353		227	
														354		226	
														355		225	
			356.0											356		224	
PQ	70	5.0	5.0	5.0	100	100								357		223	
														358		222	
														359		221	
														360			

BLACK & VEATCH

BORING LOG

BORING NO. TB-C5

CLIENT	PROJECT	PROJECT NO.
Detroit Edison	Fermi 3 COL Application	147483

PROJECT LOCATION	COORDINATES	GROUND ELEVATION (DATUM)	TOTAL DEPTH
Monroe, MI	N 6677.7' E 4592.8'	580.8 ft (NAVD 88)	471.1 (feet)

SURFACE CONDITIONS	COORDINATE SYSTEM	DATE START	DATE FINISHED
Parking area near propane tanks	Plant	06/21/07	07/18/07

LOGGED BY	CHECKED BY	APPROVED BY
TB GLO for Bonnie/Grainger	sm for Dogbey/Bonnie TB	Meyer sm

SAMPLING							CORING										
SAMPLE TYPE	SAMPLE NUMBER	SET 6 INCHES	2ND 6 INCHES	3RD 6 INCHES	N VALUE	SAMPLE RECOVERY	CORE SIZE	RUN NUMBER	RUN LENGTH	RUN RECOVERY	RQD RECOVERY	PERCENT RECOVERY	RQD	DEPTH (FEET)	SAMPLE TYPE	ELEVATION (FEET)	GRAPHIC LOG

CLASSIFICATION OF MATERIALS	REMARKS
0°,B,MW,anhydrite,Fi,Pl @ 359.5', 360.6'	
360.6	
CLAYSTONE; very dark gray; fresh; very strong; moderately hard; massive; w/interbedded gray to light brownish gray layers & patches of micritic dolomite & seams of anhydrite; (Salina Group - Unit C).	
0°,B,MW,anhydrite,Fi,Pl @ 363.6'	
light brownish gray dolomite band @ 363.6-363.8'	
20°,J,MW,anhydrite,Fi,Pl @ 363.9'	
	Core box #35 starts @ 364.4'. PQ-71: Left 1.0' in hole, recovered by going back in hole. Resulted in full recovery.
366.7	
DOLOMITE; interbedded light brownish gray & dark gray; fresh; very strong; hard; w/partings of claystone & anhydrite seams; (Salina Group - Unit C).	
0°,B,MW,anhydrite,Fi,Pl @ 367.4'	
367.9	
CLAYSTONE; very dark gray; fresh; very strong; hard; w/anhydrite bands; (Salina Group - Unit C).	
grades very dark greenish black @ 370.0'	
10°,J,MW,anhydrite,Fi,Pl @ 370.2'	
0°,B,MW,anhydrite,Fi,Pl @ 370.4'	
30°,J,N,anhydrite,Fi,WA @ 371.0'	
372.0	
DOLOMITE; light brownish gray; micritic; fresh; strong; hard interbedded w/bands of light gray ANAHYDRITE & bands of dark greenish gray claystone (Salina Group - Unit C).	
anhydrite seams @ 372.0-372.4', 372.5-372.6'	
0°,B,MW,anhydrite,Fi,Pl @ 373.0'	
anhydrite seams @ 373.6-373.7'	Core box #36 starts @ 373.6'.
0°,B,MW,anhydrite,Fi,Pl @ 374.0', 374.1'	
0°,B,MW,anhydrite,Fi,Pl @ 374.8'	

RUN NUMBER	RUN LENGTH	RUN RECOVERY	RQD RECOVERY	PERCENT RECOVERY	RQD
71	5.0	5.0	5.0	100	100
72	5.0	5.0	5.0	100	100
73	5.0	5.0	5.0	100	100

BLACK & VEATCH

BORING LOG

BORING NO. TB-C5
SHEET 26 OF 32

CLIENT	PROJECT	PROJECT NO.
Detroit Edison	Fermi 3 COL Application	147483

PROJECT LOCATION	COORDINATES	GROUND ELEVATION (DATUM)	TOTAL DEPTH
Monroe, MI	N 6677.7' E 4592.8'	580.8 ft (NAVD 88)	471.1 (feet)

SURFACE CONDITIONS	COORDINATE SYSTEM	DATE START	DATE FINISHED
Parking area near propane tanks	Plant	06/21/07	07/18/07

LOGGED BY	CHECKED BY	APPROVED BY
TB GCO for Bonnie/Grainger	SM for Dogbey/Bonnie TB	Meyer EM

SAMPLING: SAMPLE TYPE	SAMPLE NUMBER	SET 6 INCHES	2ND 6 INCHES	3RD 6 INCHES	N VALUE	SAMPLE RECOVERY	CORING: CORE SIZE	RUN NUMBER	RUN LENGTH	RUN RECOVERY	RQD RECOVERY	PERCENT RECOVERY	RQD	DEPTH (FEET)	SAMPLE TYPE	ELEVATION (FEET)	GRAPHIC LOG	CLASSIFICATION OF MATERIALS	REMARKS
														375		205		375.8	
										376.0				376		204		DOLOMITE; gray & light brownish gray; micritic; fresh; very strong; hard; interbedded w/bands & partings of greenish black claystone & anhydrite bands; (Salina Group - Unit C).	
														377		203		10°,B,MW,anhydrite,Fi @ 377.5'	
														378		202		anhydrite seam @ 378.1-378.5'	
							PQ	74	5.0	4.8	4.8	96	96	379		201		10°,B,MW,anhydrite,Fi @ 379.2'	
														380		200		anhydrite seam @ 379.3-379.4'	
														381		199		90°,J,N,anhydrite,Fi,Ir @ 379.7-381.0'	
										381.0				382		198		grades pale yellowish brown @ 381.9'	
														383		197		382.1	
																		CLAYSTONE; dark gray; fresh; very strong; moderately hard; massive; w/anhydrite seams & pockets; (Salina Group - Unit C).	Core box #37 starts @ 383.0'.
							PQ	75	5.0	5.0	5.0	100	100	384		196		0°,B,MW,anhydrite,Fi,Pl @ 382.7', 383.2'	
														385		195		0°,B,MW,anhydrite,Fi,Pl @ 383.9'	
										386.0				386		194			
														387		193			
														388		192		40°,J,N,anhydrite,Fi,Pl @ 388.0'	
							PQ	76	5.0	4.9	4.7	98	94	389		191		anhydrite seams @ 389.3-390.4'	
														390					

BLACK & VEATCH

BORING LOG

BORING NO. TB-C5

CLIENT	PROJECT	PROJECT NO.
Detroit Edison	Fermi 3 COL Application	147483

PROJECT LOCATION	COORDINATES	GROUND ELEVATION (DATUM)	TOTAL DEPTH
Monroe, MI	N 6677.7' E 4592.8'	580.8 ft (NAVD 88)	471.1 (feet)

SURFACE CONDITIONS	COORDINATE SYSTEM	DATE START	DATE FINISHED
Parking area near propane tanks	Plant	06/21/07	07/18/07

LOGGED BY	CHECKED BY	APPROVED BY
TB Bonnie/Grainger	EM for Dogbey/Bonnie TB	EM Meyer

SAMPLING							CORING									
SAMPLE TYPE	SAMPLE NUMBER	SET 6 INCHES	2ND 6 INCHES	3RD 6 INCHES	N VALUE	SAMPLE RECOVERY	CORE SIZE	RUN NUMBER	RUN LENGTH	RUN RECOVERY	RQD RECOVERY	PERCENT RECOVERY	RQD	DEPTH (FEET)	SAMPLE TYPE	ELEVATION (FEET)	GRAPHIC LOG
														390		190	
										391.0				391			
							PQ	77	5.0	5.0	5.0	100	100	392		189	
														393		188	
														394		187	
														395		186	
										396.0				396		185	
							PQ	78	5.0	5.0	5.0	100	100	397		184	
														398		183	
														399		182	
														400		181	
										401.0				401		180	
							PQ	79	5.0	5.0	5.0	100	100	402		179	
														403		178	
														404		177	
														405		176	

CLASSIFICATION OF MATERIALS

contact @ 391.8' contorted

391.8

DOLOMITE; gray; micritic; fresh; very strong; hard; massive; (Salina Group - Unit C).

0°,B,MW,anhydrite,Fi,Pl @ 392.8', 393.1'
90°,J,N,anhydrite,Fi,Ir @ 392.8-394.8'

0°,B,MW,anhydrite,Fi,Pl @ 393.7'

394.4

DOLOMITE; gray; micritic; fresh; very strong; hard; banded w/very dark gray bands & partings; (Salina Group - Unit C).
0°,B,MW,anhydrite,Fi,Pl @ 394.5'

0°,B,MW,anhydrite,Fi,Pl @ 395.9'

396.2

DOLOMITE; crystalline; very dark gray to olive black; micritic; fresh; very strong; hard; banded w/anhydrite seams & nodules; (Salina Group - Unit C).

401.3

DOLOMITE; gray & light brownish gray, interbedded; micritic; fresh; very strong; hard; (Salina Group - Unit C).
0°-5°,B,MW,anhydrite,Fi,WA @ 401.6', 401.7'

402.8

DOLOMITE; crystalline; very dark gray to olive black; micritic; fresh; very strong; hard; banded w/anhydrite seams & nodules; (Salina Group - Unit C).

REMARKS

Core box #38 starts @ 392.7'.

Core box #39 starts @ 402.0'.

BLACK & VEATCH

BORING LOG

BORING NO. TB-C5

CLIENT	PROJECT	PROJECT NO.
Detroit Edison	Fermi 3 COL Application	147483

PROJECT LOCATION	COORDINATES	GROUND ELEVATION (DATUM)	TOTAL DEPTH
Monroe, MI	N 6677.7' E 4592.8'	580.8 ft (NAVD 88)	471.1 (feet)

SURFACE CONDITIONS	COORDINATE SYSTEM	DATE START	DATE FINISHED
Parking area near propane tanks	Plant	06/21/07	07/18/07

LOGGED BY	CHECKED BY	APPROVED BY
TB GCO for Bonnie/Grainger	EM for Dogbey/Bonnie TB	EM Meyer

SAMPLING							CORING									
SAMPLE TYPE	SAMPLE NUMBER	SET 6 INCHES	2ND 6 INCHES	3RD 6 INCHES	N VALUE	SAMPLE RECOVERY	CORE SIZE	RUN NUMBER	RUN LENGTH	RUN RECOVERY	RQD RECOVERY	PERCENT RECOVERY	RQD	DEPTH (FEET)	SAMPLE TYPE	ELEVATION (FEET)	GRAPHIC LOG	CLASSIFICATION OF MATERIALS	REMARKS
														405					
														406		175			
			406.0																Water level @ 23.8' prior to drilling on 07/17/07.
														407		174		60°,J,T,No,No,Pl @ 407.0'	
																173		407.8	
														408				DOLOMITE; dark gray; micritic; fresh; very strong; hard; w/bands of black shaley dolomite & nodules of anhydrite; (Salina Group - Unit C).	
PQ	80	5.0	5.0	5.0	100	100										172			
														409				80°,J,N,anhydrite,Fi,Pl @ 409.2'	
														410		171			
																170		anhydrite seam @ 410.7-411.0'	
			411.0											411				410.8	Core box #40 starts @ 411.0'.
																169		DOLOMITE; interbedded; gray & black; micritic; fresh; very strong; hard; banded w/anhydrite seams & nodules; bedding convoluted; (Salina Group - Unit C).	
														412				0°,B,MW,anhydrite,Fi,WA @ 412.1', 412.2'	
														413		168			
PQ	81	5.0	5.0	5.0	100	100										167		85°,J,N,H,Ir @ 413.8-414.6'	
														414					
														415		166		vertical, narrow fracture @ top; widening toward middle; filled w/olive black matrix of claystone w/ angular clasts of light olive gray dolomite @ 414.7-419.6'	
																165		fracture filling matrix becomes anhydrite below 416.0'	
			416.0											416				416.2	
														417		164		CLAYSTONE; dolomitic; very dark gray; fresh; extremely strong; hard; (Salina Group - Unit C).	
																163		0°,B @ 417.2'	Ground core @ 417.2'.
														418				brecciated, well indurated @ 417.7-418.2'	
PQ	82	5.0	5.0	5.0	100	100										162		anhydrite nodules @ 418.3-420.3'	
														419					
														420		161			

BLACK & VEATCH

BORING LOG

BORING NO. TB-C5

CLIENT	PROJECT	PROJECT NO.
Detroit Edison	Fermi 3 COL Application	147483

PROJECT LOCATION	COORDINATES	GROUND ELEVATION (DATUM)	TOTAL DEPTH
Monroe, MI	N 6677.7' E 4592.8'	580.8 ft (NAVD 88)	471.1 (feet)

SURFACE CONDITIONS	COORDINATE SYSTEM	DATE START	DATE FINISHED
Parking area near propane tanks	Plant	06/21/07	07/18/07

LOGGED BY	CHECKED BY	APPROVED BY
TB Bonnie/Grainger	Dogbey/Bonnie TB	Meyer

SAMPLING							CORING									
SAMPLE TYPE	SAMPLE NUMBER	SET 6 INCHES	2ND 6 INCHES	3RD 6 INCHES	N VALUE	SAMPLE RECOVERY	CORE SIZE	RUN NUMBER	RUN LENGTH	RUN RECOVERY	RQD RECOVERY	PERCENT RECOVERY	RQD	DEPTH (FEET)	SAMPLE TYPE	ELEVATION (FEET)	GRAPHIC LOG	CLASSIFICATION OF MATERIALS	REMARKS
														420					Core box #41 starts @ 420.4'.
														421		160			
			421.0															421.5	
														422		159		CLAYSTONE & DOLOMITE; core divided vertically by rock type along irregular divide; very dark gray claystone on one side & brownish yellow dolomite & anhydrite on other side; (Salina Group - Unit C). brecciated; well indurated @ 421.5-422.6' 0°,B,MW,anhydrite,Fi,Pl @ 422.5', 422.7'	
														423		158			
PQ	83	5.0	5.0	5.0	100	100												422.7	
														424		157		DOLOMITE; yellowish red; micritic; fresh; very strong; hard; w/near vertical fracture filled w/very dark gray matrix & dolomite clasts; (Salina Group - Unit C). 0°,B,MW,anhydrite,Fi,Pl @ 423.4', 424.2'	
																		424.2	
														425		156		DOLOMITE; interbedded gray & black; micritic; fresh; very strong; hard; w/anhydrite nodules; (Salina Group - Unit C).	
														426		155			
			426.0															426.1	
														427		154		ANHYDRITE interbedded with DOLOMITE; white; crystalline; fresh; strong; low hardness; banded w/ convoluted bedding; (Salina Group - Unit B).	
														428		153			
PQ	84	5.0	5.0	5.0	100	100													
														429		152			Core box #42 starts @ 429.2'.
														430		151			
														431		150			PQ-85: Initially no recovery. Went back into recover 4.5' of core. Remaining 0.2' recovered from run PQ-86.
			431.0																
														432		149			
																		432.1	
														433		148		DOLOMITE; interbedded sequence grading downward from pale yellowish brown to olive black; micritic; fresh; very strong; hard; convoluted; (Salina Group - Unit B).	
PQ	85	5.0	4.7	4.7	94	94													
														434		147		0°,B,MW,anhydrite,Fi,Pl @ 434.4'	
														435		146		434.9	

BLACK & VEATCH

BORING LOG

BORING NO. TB-C5
SHEET 30 OF 32

CLIENT	PROJECT	PROJECT NO.
Detroit Edison	Fermi 3 COL Application	147483

PROJECT LOCATION	COORDINATES	GROUND ELEVATION (DATUM)	TOTAL DEPTH
Monroe, MI	N 6677.7' E 4592.8'	580.8 ft (NAVD 88)	471.1 (feet)

SURFACE CONDITIONS	COORDINATE SYSTEM	DATE START	DATE FINISHED
Parking area near propane tanks	Plant	06/21/07	07/18/07

LOGGED BY	CHECKED BY	APPROVED BY
TB Griffor Bonnie/Grainger	EM for Dogbey/Bonnie TB	Meyer EM

SAMPLING							CORING									
SAMPLE TYPE	SAMPLE NUMBER	SET 6 INCHES	2ND 6 INCHES	3RD 6 INCHES	N VALUE	SAMPLE RECOVERY	CORE SIZE	RUN NUMBER	RUN LENGTH	RUN RECOVERY	RQD RECOVERY	PERCENT RECOVERY	RQD	DEPTH (FEET)	SAMPLE TYPE	ELEVATION (FEET)	GRAPHIC LOG	CLASSIFICATION OF MATERIALS	REMARKS
														435		145		DOLOMITE; mottled light gray & dark gray; micritic; fresh; very strong; hard; (Salina Group - Unit B).	
														436		144		436.0 DOLOMITE; interbedded gray & black; micritic; fresh; very strong; hard; banded w/anhydrite seams & nodules; (Salina Group - Unit B). 0°,B,MW,anhydrite,Fi,Pl @ 436.2' 30°,J,MW,anhydrite,Fi,Pl @ 436.8'	
														437		143			
														438		142		30°,J,MW,anhydrite,Fi,Pl @ 437.9' 438.1 ANHYDRITE with DOLOMITE; white & dark gray; crystalline; fresh; strong; low hardness; banded; convoluted; (Salina Group - Unit B). 30°,J,MW,anhydrite,Fi,Pl @ 439.0'	
PQ	86	5.0	5.0	5.0	100	100								439		141			Core box #43 starts @ 439.4'.
														440		140		440.6 DOLOMITE; light gray & dark gray, mottled; micritic; fresh; very strong; hard; (Salina Group - Unit B).	Water level @ 23.0' prior to drilling on 07/18/07.
														441		139		441.2 DOLOMITE; interbedded gray, light brownish gray & olive black; micritic; fresh; very strong; hard; banded; w/anhydrite seams & nodules; (Salina Group - Unit B). 0°,B,MW,anhydrite,Fi,Pl @ 441.7'	
														442		138		442.7 ANHYDRITE & DOLOMITE; dark gray & light brownish gray; micritic; fresh; strong; intermingled; (Salina Group - Unit B).	
PQ	87	5.0	5.0	4.9	100	98								443		137			
														444		136			
														445		135		445.1 DOLOMITE; crystalline; light brownish gray & olive black; banded; micritic; fresh; very strong; hard; w/ anhydrite nodules; (Salina Group - Unit B).	
														446		134			
														447		133		447.0 DOLOMITE & ANHYDRITE; light brownish gray & dark gray; micritic; fresh; very strong; hard; w/ occasional olive black partings; (Salina Group - Unit B).	
PQ	88	5.0	5.0	5.0	100	100								448		132			Core box #44 starts @ 448.3'.
														449		131			
														450					

BLACK & VEATCH

BORING LOG

CLIENT	PROJECT	PROJECT NO.
Detroit Edison	Fermi 3 COL Application	147483

PROJECT LOCATION	COORDINATES	GROUND ELEVATION (DATUM)	TOTAL DEPTH
Monroe, MI	N 6677.7' E 4592.8'	580.8 ft (NAVD 88)	471.1 (feet)

SURFACE CONDITIONS	COORDINATE SYSTEM	DATE START	DATE FINISHED
Parking area near propane tanks	Plant	06/21/07	07/18/07

LOGGED BY	CHECKED BY	APPROVED BY
TB GLO for Bonnie/Grainger	sm for Dogbey/Bonnie TB	Meyer sm

SAMPLING							CORING							DEPTH (FEET)	SAMPLE TYPE	ELEVATION (FEET)	GRAPHIC LOG	CLASSIFICATION OF MATERIALS	REMARKS
SAMPLE TYPE	SAMPLE NUMBER	SET 6 INCHES	2ND 6 INCHES	3RD 6 INCHES	N VALUE	SAMPLE RECOVERY	CORE SIZE	RUN NUMBER	RUN LENGTH	RUN RECOVERY	RQD RECOVERY	PERCENT RECOVERY	RQD						
														450		130		450.7	
										451.0				451		129		DOLOMITE; crystalline; light brownish gray; micritic; fresh; very strong; hard; banded w/partings & bands of very dark gray claystone; (Salina Group - Unit B).	
														452		128		convoluted bedding @ 452.8-453.2'	
														453		127		453.3	
							PQ	89	5.0	5.0	5.0	100	100	454		126		CLAYSTONE; dolomitic; olive black; fresh; very strong; moderately hard; banded; (Salina Group - Unit B).	
														455		125		454.0	
														456		124		DOLOMITE; light brownish gray & black, mottled; fresh; very strong; hard; (Salina Group - Unit B). 0°,B,N,anhydrite,Fi,Pl @ 454.3'	
														457		123		454.4	
										456.0				458		122		DOLOMITE; crystalline; light brownish gray & light gray; micritic; fresh; very strong; hard; banded w/dark gray anhydrite interbeds; (Salina Group - Unit B).	Core box #45 starts @ 457.4'.
							PQ	90	5.0	5.0	5.0	100	100	459		121			
														460		120		460.2	
														461		119		DOLOMITE; crystalline; light brownish gray; micritic; fresh; very strong; hard; banded w/partings & bands of dark gray claystone; (Salina Group - Unit B).	
										461.0				462		118		70°,J,T,H,No,No,Pl @ 461.7-462.2'	
														463		117		0°,B,VN,No,No,WA,R @ 462.2'	
							PQ	91	5.0	5.0	5.0	100	100	464		116		convoluted bedding @ 463.0-464.4'	
														465				0°,B,VN,No,No,WA,R @ 463.4', 463.5'	
																		464.1	
																		DOLOMITE; crystalline; light brownish gray; fresh; very strong; hard; interbedded w/very dark gray shale partings; (Salina Group - Unit B).	

BLACK & VEATCH

BORING LOG

BORING NO. TB-C5

CLIENT	PROJECT	PROJECT NO.
Detroit Edison	Fermi 3 COL Application	147483

PROJECT LOCATION	COORDINATES	GROUND ELEVATION (DATUM)	TOTAL DEPTH
Monroe, MI	N 6677.7' E 4592.8'	580.8 ft (NAVD 88)	471.1 (feet)

SURFACE CONDITIONS	COORDINATE SYSTEM	DATE START	DATE FINISHED
Parking area near propane tanks	Plant	06/21/07	07/18/07

LOGGED BY	CHECKED BY	APPROVED BY
TB Bonnie/Grainger	Dogbey/Bonnie TB	Meyer

SAMPLING: SAMPLE TYPE	SAMPLE NUMBER	SET 6 INCHES	2ND 6 INCHES	3RD 6 INCHES	N VALUE	SAMPLE RECOVERY

CORING: CORE SIZE	RUN NUMBER	RUN LENGTH	RUN RECOVERY	RQD RECOVERY	PERCENT RECOVERY	RQD
PQ	92	5.0	5.0	5.0	100	100

DEPTH (FEET)	SAMPLE TYPE	ELEVATION (FEET)	GRAPHIC LOG	CLASSIFICATION OF MATERIALS	REMARKS
465		115		0°,B,MW,anhydrite,Fi,Pl @ 464.4'	
				464.6	
				DOLOMITE; argillaceous; light brownish gray & gray; micritic; fresh; strong; hard; banded w/stylolites; (Salina Group - Unit B).	
466		114		0°,B,MW,anhydrite,Fi,Pl @ 465.4'	Core box #46 starts @ 466.0'.
466.0					
467		113			
				467.5	
468		112		ANHYDRITE; crystalline; dark gray & dark grayish brown; micritic; fresh; strong; low hardness; w/ convoluted deposits of brown dolomite; (Salina Group - Unit B).	
469		111			
470		110			
471		109			Bottom of boring @ 471.1'. Water level not recorded at completion of drilling. Backfilled w/ bentonite chips on 09/15/07.
472		108			
473		107			
474		106			
475		105			
476		104			
477		103			
478		102			
479		101			
480					

BLACK & VEATCH

BORING LOG

BORING NO. TB-C6

CLIENT	PROJECT	PROJECT NO.
Detroit Edison	Fermi 3 COL Application	147483

PROJECT LOCATION	COORDINATES	GROUND ELEVATION (DATUM)	TOTAL DEPTH
Monroe, MI	N 6510.2' E 4615.9'	580.6 ft (NAVD 88)	51.3 (feet)

SURFACE CONDITIONS	COORDINATE SYSTEM	DATE START	DATE FINISHED
Gravel parking lot west side of fitness building	Plant	07/17/07	07/27/07

LOGGED BY	CHECKED BY	APPROVED BY
TBfor ECA TB Mass/Ang/Bonnie	EMM TBfor Dogbey/Mass	EM Meyer

SAMPLING							CORING										
SAMPLE TYPE	SAMPLE NUMBER	SET 6 INCHES	2ND 6 INCHES	3RD 6 INCHES	N VALUE	SAMPLE RECOVERY	CORE SIZE	RUN NUMBER	RUN LENGTH	RUN RECOVERY	RQD RECOVERY	PERCENT RECOVERY	RQD	DEPTH (FEET)	SAMPLE TYPE	ELEVATION (FEET)	GRAPHIC LOG
										6.0				0		580	
														1		579	
														2		578	
														3		577	
														4		576	
														5		575	
														6		574	
S	1												NR	7		573	
														8		572	
														9		571	
										10.0				10		570	
S	2												NR	11		569	
										12.0				12		568	
														13		567	
TW	2												0	14		566	
														15			

CLASSIFICATION OF MATERIALS	REMARKS
Well graded GRAVEL with Cobbles (GW) - About 80% fine to coarse, angular to subangular, hard gravel w/max. size 3"; about 10% angular, hard cobbles w/max. size 5"; about 10% fine to coarse, angular to subangular, hard sand; grayish brown; dry to moist; strong reaction w/HCl; homogeneous; (Fill).	Boring advanced w/vacuum excavation.
6.0	
Silty SAND (SM) - About 50% fine to coarse, angular, hard sand; about 50% low plasticity, low toughness, rapid dilatancy, low dry strength fines; gray; moist to wet; weak reaction w/HCl; homogeneous; (Fill). clayey gravel parting, black, weak reaction w/HCl @ 6.0'	Below 6.0' continued w/4" ID sonic continuous sampler w/ nominal 6" temporary steel casing advanced w/sampler. Discrete sample S01A collected from S1.
	Set nominal 6" temporary steel casing to 12.0'. Water level @ 9.2' prior to drilling on 07/25/07 w/ borehole open to 12.5'. Below 12.5' continued

BLACK & VEATCH

BORING LOG

BORING NO. TB-C6

CLIENT	PROJECT	PROJECT NO.
Detroit Edison	Fermi 3 COL Application	147483

PROJECT LOCATION	COORDINATES	GROUND ELEVATION (DATUM)	TOTAL DEPTH
Monroe, MI	N 6510.2' E 4615.9'	580.6 ft (NAVD 88)	51.3 (feet)

SURFACE CONDITIONS	COORDINATE SYSTEM	DATE START	DATE FINISHED
Gravel parking lot west side of fitness building	Plant	07/17/07	07/27/07

LOGGED BY	CHECKED BY	APPROVED BY
TB for ECA TB Mass/Ang/Bonnie	Em for TB for Dogbey/Mass	Em Meyer

SAMPLING: SAMPLE TYPE	SAMPLE NUMBER	SET 6 INCHES	2ND 6 INCHES	3RD 6 INCHES	N VALUE	SAMPLE RECOVERY	CORING: CORE SIZE	RUN NUMBER	RUN LENGTH	RUN RECOVERY	RQD RECOVERY	PERCENT RECOVERY	RQD	DEPTH (FEET)	SAMPLE TYPE	ELEVATION (FEET)	GRAPHIC LOG	CLASSIFICATION OF MATERIALS	REMARKS
										15.0				15		565		15.0 Fat CLAY (CH) - About 100% high plasticity, high toughness, no dilatancy fines; dark greenish gray; soft; moist; (Lacustrine Deposit).	w/NWJ rods & 4½" tricone bit using bentonite mud as drilling fluid. TW-2: tube bent. Lost fluid circulation @ 15.0'. Below 15.0' continued w/4" ID sonic continuous sampler w/ nominal 6" temporary steel casing advanced w/sampler. PP = 1.5 TSF @ 15.0'. Discrete sample S3A collected @ 16.0-16.5'. Discrete sample S3B collected @ 17.5-18.0'. PP = 4.5 TSF @ 17.5'. Hole open to 19.0'. Set nominal 6" temporary steel casing to 18.5.' Below 19.0' continued w/ NWJ rods & 4½" tricone bit using bentonite mud as drilling fluid. SPT performed w/D-50 automatic hammer. PP > 4.5 TSF @ 21.0'. PP > 4.5 TSF @ 25.0'.
														16		564			
S	3					4.0								17		563		17.0 Lean CLAY (CL) - About 100% medium plasticity, medium toughness, no dilatancy fines; brown; hard; moist; trace pieces of subrounded, coarse gravel w/ max. size 1¼", fractured w/2 hammer blows; (Glacial Till).	
														18		562			
										19.0				19		561			
TW	4					1.1								20		560			
														21		559		21.5	
														22		558		Lean CLAY with Sand (CL) - About 75% medium plasticity, medium toughness, no dilatancy fines; about 15% fine to coarse, subrounded to subangular sand; about 10% fine to coarse, subrounded to subangular gravel w/max. size ½", fractured w/2 hammer blows; sand seams; dark gray; hard; moist; (Glacial Till).	
SPT	5	11	30	33	63	1.2								23		557			
														24		556			
														25		555		grades w/gravel w/max. size 1½" @ 25.5'	
SPT	6	12	14	12	26	1.3								26		554		26.5	
														27		553		Clayey GRAVEL (GC) - About 75% fine to coarse, subangular to subrounded, hard gravel w/max. size 1½"; about 25% medium plasticity, medium toughness, slow dilatancy fines; clay seams; dark gray; dense; moist.	
SPT	7	15	24	17	41	0.9								28		552			
														29		551		29.0	
														30				Poorly graded GRAVEL (GP) - About 85% fine to coarse, subrounded to subangular, hard gravel w/max. size 1½"; about 10% medium to coarse,	

BLACK & VEATCH

BORING LOG

BORING NO. TB-C6

CLIENT	PROJECT	PROJECT NO.
Detroit Edison	Fermi 3 COL Application	147483

PROJECT LOCATION	COORDINATES	GROUND ELEVATION (DATUM)	TOTAL DEPTH
Monroe, MI	N 6510.2' E 4615.9'	580.6 ft (NAVD 88)	51.3 (feet)

SURFACE CONDITIONS	COORDINATE SYSTEM	DATE START	DATE FINISHED
Gravel parking lot west side of fitness building	Plant	07/17/07	07/27/07

LOGGED BY	CHECKED BY	APPROVED BY
TB ECA TB Mass/Ang/Bonnie	Dogbey/Mass	Meyer

SAMPLING							CORING									
SAMPLE TYPE	SAMPLE NUMBER	SET 6 INCHES	2ND 6 INCHES	3RD 6 INCHES	N VALUE	SAMPLE RECOVERY	CORE SIZE	RUN NUMBER	RUN LENGTH	RUN RECOVERY	RQD RECOVERY	PERCENT RECOVERY	RQD	DEPTH (FEET)	SAMPLE TYPE	ELEVATION (FEET)	GRAPHIC LOG	CLASSIFICATION OF MATERIALS	REMARKS
SPT	8	18				15								30		550		subrounded to subangular sand; about 5% fines; gray; dense; wet; (Weathered Bedrock).	
														31		549			
														32		548		32.0 DOLOMITE; light brownish gray; micritic; fresh; strong; hard; w/stylolites; (Bass Islands Group).	Below 32.0' continued w/4" ID sonic continuous sampler w/ nominal 6" temporary steel casing advanced w/sampler. Hole open to 35.5'. Sonic core S-9 stored in box labeled S1. Set nominal 6" temporary steel casing to 35.5'. Core box #1 starts @ 35.5'. Below 35.5' continued w/ triple tube wire line core barrel w/diamond bit using water as drilling fluid. Water level @ 16.7' prior to drilling on 07/27/07.
										32.0				33		547			
S	9					3.5								34		546			
														35		545		35.5 DOLOMITE; argillaceous; dark grayish brown and light brownish gray, banded; pitted; micritic; fresh to slightly weathered; very strong; hard; w/dark gray, very fine grained, fresh, very strong, very hard shale partings; pits 0.04-0.08"; (Bass Islands Group). highly fractured @ 35.7-35.9', 37.4-37.6' very closely spaced stylolites @ 35.9-36.0' 90°,J,T,WA @ 36.0-37.0' 0.4" vug @ 36.7' shale partings @ 37.4'-37.6' 60°,J,No,No,Pl,SR @ 37.6-37.7' 0°,B,No,No,Pl,SR @ 38.0-38.2' shale partings - 0°,B,Pl,SR @ 38.9', 39.1', 39.3', 39.6', 39.7', 40.0'	
										35.5				36		544			
HQ	1	3.0	3.0	1.9	100	63								37		543			
														38		542			
										38.5				39		541			
														40		540		40.2 DOLOMITE; argillaceous; grayish brown & dark gray, banded; micritic; fresh; very strong; very hard; w/stylolites; (Bass Islands Group). very closely spaced stylolites @ 40.3-40.7' shale partings - 0°,B,Pl,SR @ 40.4', 40.6' 90°,J,Ca,Pa,Pl,SR @ 40.9-41.2' highly fractured @ 41.2-41.8' 80°,J,Ca,Fi,Pl,SR @ 41.8-42.2' 0°,B,Ca,Pa,Pl,SR @ 42.2', 42.9' 90°,J,Ca,Fi,WA,SR @ 42.2-42.9' 80°,J,Ca,PA,Pl,SR @ 42.2-42.4'	
HQ	2	5.3	5.3	1.2	100	23								41		539			
														42		538			
														43		537			
										43.8				44		536		70°,J,Ca/Cl,Pa,Pl,SR @ 44.3-44.9' gray, mottled; fine grained (crystalline); slightly	
														45					

BLACK & VEATCH

BORING LOG

BORING NO. TB-C6

SHEET 4 OF 4

CLIENT	PROJECT	PROJECT NO.
Detroit Edison	Fermi 3 COL Application	147483

PROJECT LOCATION	COORDINATES	GROUND ELEVATION (DATUM)	TOTAL DEPTH
Monroe, MI	N 6510.2' E 4615.9'	580.6 ft (NAVD 88)	51.3 (feet)

SURFACE CONDITIONS	COORDINATE SYSTEM	DATE START	DATE FINISHED
Gravel parking lot west side of fitness building	Plant	07/17/07	07/27/07

LOGGED BY	CHECKED BY	APPROVED BY
TB Mass/Ang/Bonnie	Dogbey/Mass	Meyer

SAMPLING							CORING									
SAMPLE TYPE	SAMPLE NUMBER	SET 6 INCHES	2ND 6 INCHES	3RD 6 INCHES	N VALUE	SAMPLE RECOVERY	CORE SIZE	RUN NUMBER	RUN LENGTH	RUN RECOVERY	RQD RECOVERY	PERCENT RECOVERY	RQD	DEPTH (FEET)	SAMPLE TYPE	ELEVATION (FEET)	GRAPHIC LOG	CLASSIFICATION OF MATERIALS	REMARKS
														45		535		weathered; strong @ 44.7-45.2' shale partings - 0°,B,Pl,SR @ 45.2', 45.9', 46.2'	
														46		534			
HQ	3	5.0	5.0	1.9	100	38	HQ	3	5.0	5.0	1.9	100	38					100°,J,No,No,Pl,SR @ 46.2-46.8' 80°,J,No,No,Pl,SR @ 46.6-46.9'	
														47		533			
																		0°,J,No,No,Pl,SR @ 47.2' 50°,J,No,No,Pl,SR @ 47.5-47.7' 70°,J,No,No,Pl,SR @ 47.7-48.0' 130°,J,No,No,Pl,SR @ 47.9-48.2'	
														48		532		48.0 DOLOMITE; light gray to gray; vuggy; micritic to very fine grained; fresh to slightly weathered; strong; very hard; (Bass Islands Group). 20°,J,No,No,Pl,SR @ 48.1' very closely spaced stylolites @ 48.6' highly fractured @ 48.8-49.0'	Core box #2 starts @ 48.5'.
			48.8											49		531			
HQ	4	2.5	2.5	0.9	100	36	HQ	4	2.5	2.5	0.9	100	36	50		530		49.0 DOLOMITE; argillaceous; gray, banded; micritic to very fine grained; fresh; strong; very hard; (Bass Islands Group). very closely spaced stylolites @ 49.3-49.5' 70°,J,No,No,Ir,SR @ 49.4-49.7' 90°,J,No,No,Pl,SR @ 49.8-49.9', 49.8-50.2' 0°,B,No,No,Pl,SR @ 49.9' 90°,J,T,No,No,Pl,SR @ 50.5-51.3'	
														51		529			Bottom of boring @ 51.3'. Water level @ 9.9' at completion of the drilling. Backfilled w/ cement-bentonite grout to 39' bgs on 08/13/07. Continued w/bentonite chips to 1.5' bgs then gravel to surface on 08/22/07.
														52		528			
														53		527			
														54		526			
														55		525			
														56		524			
														57		523			
														58		522			
														59		521			
														60					

BLACK & VEATCH

BORING LOG

BORING NO. WT-E1
SHEET 1 OF 2

CLIENT	PROJECT	PROJECT NO.
Detroit Edison	Fermi 3 COL Application	147483

PROJECT LOCATION	COORDINATES	GROUND ELEVATION (DATUM)	TOTAL DEPTH
Monroe, MI	N 6223.8' E 4982.6'	580.5 ft (NAVD 88)	27.1 (feet)

SURFACE CONDITIONS	COORDINATE SYSTEM	DATE START	DATE FINISHED
Asphalt parking lot	Plant	08/22/07	08/23/07

LOGGED BY	CHECKED BY	APPROVED BY
Grainger GC	Dogbey/Bonnie TB	Meyer EM

SAMPLING							CORING									
SAMPLE TYPE	SAMPLE NUMBER	SET 6 INCHES	2ND 6 INCHES	3RD 6 INCHES	N VALUE	SAMPLE RECOVERY	CORE SIZE	RUN NUMBER	RUN LENGTH	RUN RECOVERY	RQD RECOVERY	PERCENT RECOVERY	RQD	DEPTH (FEET)	SAMPLE TYPE	ELEVATION (FEET)	GRAPHIC LOG	CLASSIFICATION OF MATERIALS	REMARKS
														0		580		ASPHALT 0.3 COBBLES with gravel - About 60% angular, cubical to elongated, hard cobbles w/max. size 12"; about 20% fine to coarse, angular, hard gravel; about 15% fine to coarse, angular, hard sand; about 5% fines; light gray; moist; strong reaction w/HCl; homogeneous; (Fill).	Boring advanced w/vacuum excavation.
														1		579			
														2		578			
														3		577			
														4		576			
														5		575			
										6.0				6		574			Below 6.0' continued w/4" ID sonic continuous sampler w/ nominal 6" temporary steel casing advanced w/sampler.
S	1					2.0								7		573			
														8		572			
														9		571			Discrete sample SC1 collected from S1 @ 9.0-9.25
										10.0				10		570			
														11		569			
														12		568			
S	2					3.0								13		567			Discrete sample SC2 collected from S2 @ 13.0-13.25
														14		566			
														15					

5/6/2008 4:17 PM DTE - Fermi 3 Geotech

BLACK & VEATCH

BORING LOG

BORING NO. WT-E1

CLIENT	PROJECT	PROJECT NO.
Detroit Edison	Fermi 3 COL Application	147483

PROJECT LOCATION	COORDINATES	GROUND ELEVATION (DATUM)	TOTAL DEPTH
Monroe, MI	N 6223.8' E 4982.6'	580.5 ft (NAVD 88)	27.1 (feet)

SURFACE CONDITIONS	COORDINATE SYSTEM	DATE START	DATE FINISHED
Asphalt parking lot	Plant	08/22/07	08/23/07

LOGGED BY	CHECKED BY	APPROVED BY
Grainger GG for	Dogbey/Bonnie TB	Meyer EM

SAMPLING							CORING							DEPTH (FEET)	SAMPLE TYPE	ELEVATION (FEET)	GRAPHIC LOG	CLASSIFICATION OF MATERIALS	REMARKS
SAMPLE TYPE	SAMPLE NUMBER	SET 6 INCHES	2ND 6 INCHES	3RD 6 INCHES	N VALUE	SAMPLE RECOVERY	CORE SIZE	RUN NUMBER	RUN LENGTH	RUN RECOVERY	RQD RECOVERY	PERCENT RECOVERY	RQD						
										15.5				15		565			Below 15.5' continued w/NWJ rods & 4½" tricone bit using bentonite mud as drilling fluid.
SPT	3	4	4	6	10	0.2								16		564			
														17		563		17.5	
														18		562		Lean CLAY (CL) - About 90% medium plasticity, medium toughness, no dilatancy, high dry strength fines; about 10% fine to medium sand; brown; hard; moist; strong reaction w/HCl; homogeneous; (Glacial Till).	
TW	4					1.8								19		561			
														20		560			PP > 4.5 TSF @ 20.0'.
TW	5					0.5								21		559			
														22		558		22.5	
														23		557		Lean CLAY with Gravel (CL) - About 75% medium plasticity, medium toughness, no dilatancy, high dry strength fines; about 15% fine to coarse, angular, hard gravel; about 10% fine to coarse, angular to subrounded, hard sand; dark gray; moist; strong reaction w/HCl; homogeneous; (Glacial Till).	Drill chatter @ 23.0'.
SPT	6	7	11	50/5"	50+	NR								24		556			
														25		555			
														26		554			Tricone refusal @ 27.1'.
														27		553			Bottom of boring @ 27.1'. Water level @ 16.3' @ completion of drilling. Boring caved @ 24.0'. Boring backfilled w/bentonite chips on 08/23/07.
														28		552			
														29		551			
														30					

BLACK & VEATCH

MONITORING WELL

MONITORING WELL NO. MW-381D

SHEET 1 OF 1

CLIENT	PROJECT	PROJECT NO.
Detroit Edison	Fermi 3 COL Application	147483

PROJECT LOCATION	COORDINATES	TOP OF RISER ELEVATION (DATUM)	DATE
Monroe, MI	N 5304.6' E 1843.0'	582.35 ft (NAVD 88)	06/04/07

STRATUM MONITORED
Bass Islands Group Dolomite

INSPECTOR	CHECKED BY	APPROVED BY
Grainger *Em for*	Meyer *Em*	Meyer *Em*

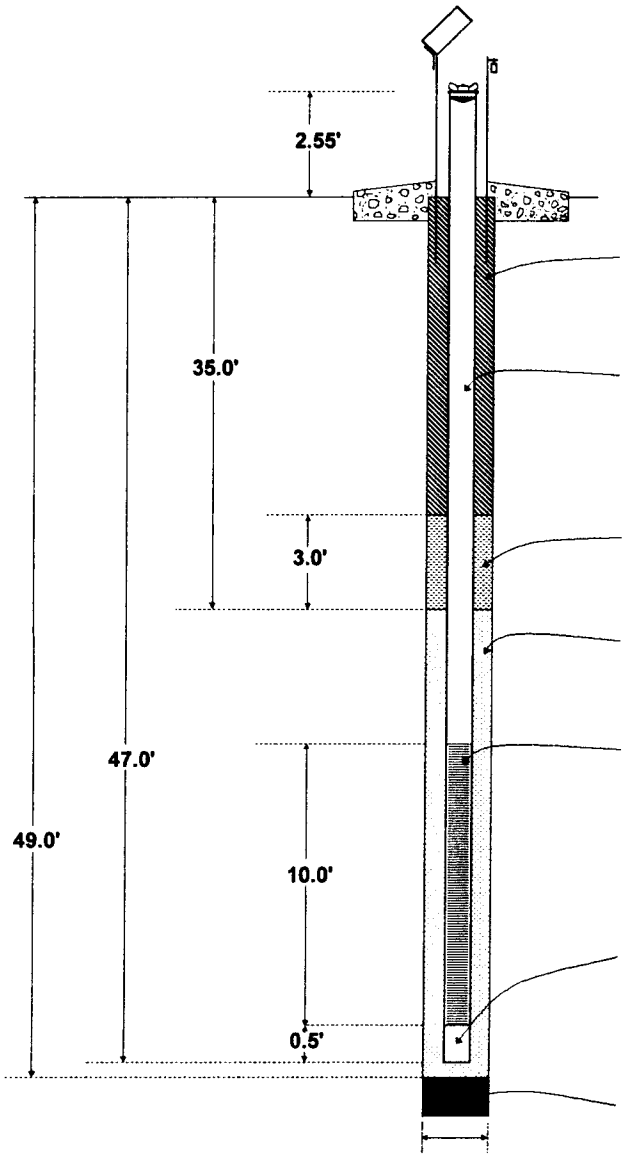

SURFACE PROTECTION
Type: 6" Steel Pipe w/Locking Cover
Top of Riser: 582.35 (ft) (NAVD 88)
Ground Surface: 579.8 (ft) (NAVD 88)

SURFACE SEAL
Type: Bentonite Chips

RISER PIPE
Diameter: 2"
Type: Sch 40, NSF certified, flush thread PVC

PRIMARY SEAL
Type: Bentonite Chips

FILTER MATERIAL
Type: 10/20 Silica Sand

SCREEN
Diameter: 2"
Type: Sch 40, NSF certified, flush thread PVC
Slot dimensions: 0.010"

SEDIMENT TRAP
Diameter: 2"
Type: Sch 40, NSF certified, flush thread PVC

LOWER SEAL
Type: Bentonite Chips

BORING DIAMETER
DIAMETER: 8": 0-12', 4.8": 12'-49'
*Note-Diagram not shown to scale

INSTALLATION METHOD: Boring drilled to completion; placed lower bentonite seal from 99.0'-49.0'; set screen & riser pipe w/stainless steel centralizers; placed filter & bentonite seal; installed protective cover w/concrete pad at surface.

NOTES: Developed by pumping 80 gallons of water.

BLACK & VEATCH

MONITORING WELL

MONITORING WELL NO. MW-381S

SHEET 1 OF 1

CLIENT	PROJECT	PROJECT NO.
Detroit Edison	Fermi 3 COL Application	147483

PROJECT LOCATION	COORDINATES	TOP OF RISER ELEVATION (DATUM)	DATE
Monroe, MI	N 5306.7' E 1838.4'	582.52 ft (NAVD 88)	05/29/07

STRATUM MONITORED: Lean Clay

INSPECTOR	CHECKED BY	APPROVED BY
GCO Ohlmacher	Meyer EM	Meyer EM

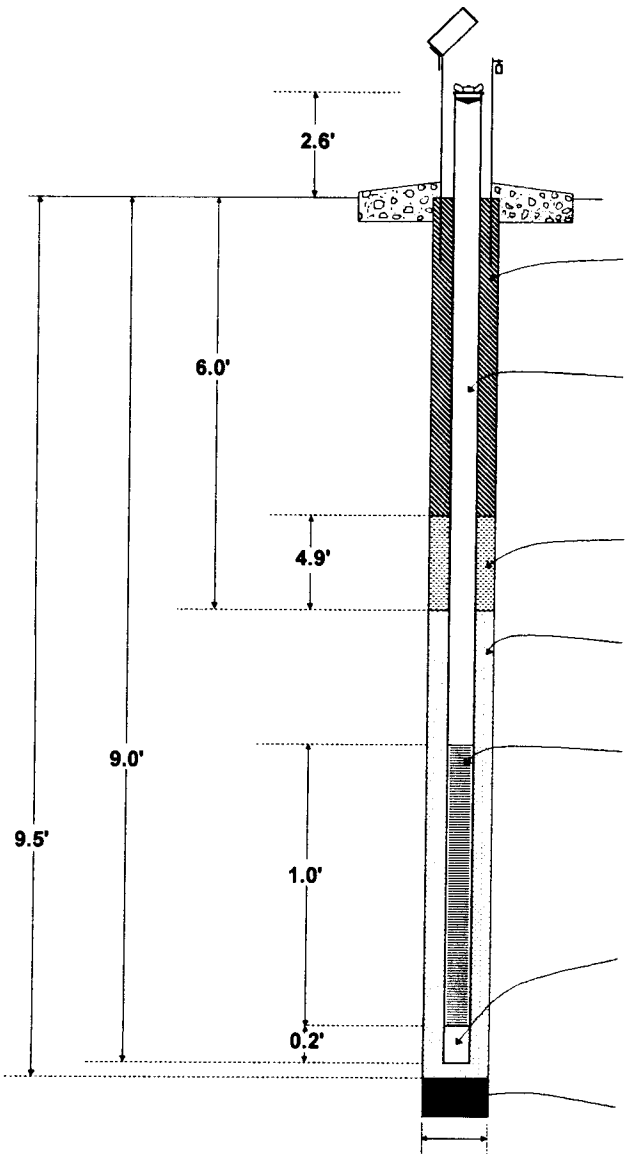

SURFACE PROTECTION

Type: 6" Steel Pipe w/Locking Cover

Top of Riser: 582.52 (ft) (NAVD 88)

Ground Surface: 579.9 (ft) (NAVD 88)

SURFACE SEAL

Type: See Primary Seal

RISER PIPE

Diameter: 2"

Type: Sch 40, NSF certified, flush thread PVC

PRIMARY SEAL

Type: Bentonite Chips

FILTER MATERIAL

Type: 10/20 Silica Sand

SCREEN

Diameter: 2"

Type: Sch 40, NSF certified, flush thread PVC

Slot dimensions: 0.010"

SEDIMENT TRAP

Diameter: 2"

Type: Sch 40, NSF certified, PVC cap

LOWER SEAL

Type: None

BORING DIAMETER

DIAMETER: 8"

*Note-Diagram not shown to scale

INSTALLATION METHOD: Boring drilled to completion; set screen & riser pipe; placed filter; surged filter; no additional filter required; placed bentonite seal; installed protective cover w/concrete pad at surface.

NOTES: Bottom cap attached w/stainless steel screws. Developed by pumping 3 gallons of water - pumped dry.

BLACK & VEATCH

MONITORING WELL

MONITORING WELL NO. MW-383D

SHEET 1 OF 1

CLIENT	PROJECT	PROJECT NO.
Detroit Edison	Fermi 3 COL Application	147483

PROJECT LOCATION	COORDINATES	TOP OF RISER ELEVATION (DATUM)	DATE
Monroe, MI	N 5805.4' E 3435.7'	585.16 ft (NAVD 88)	05/31/07

STRATUM MONITORED: Bass Islands Group Dolomite

INSPECTOR	CHECKED BY	APPROVED BY
GCO Ohlmacher	Meyer EM	Meyer EM

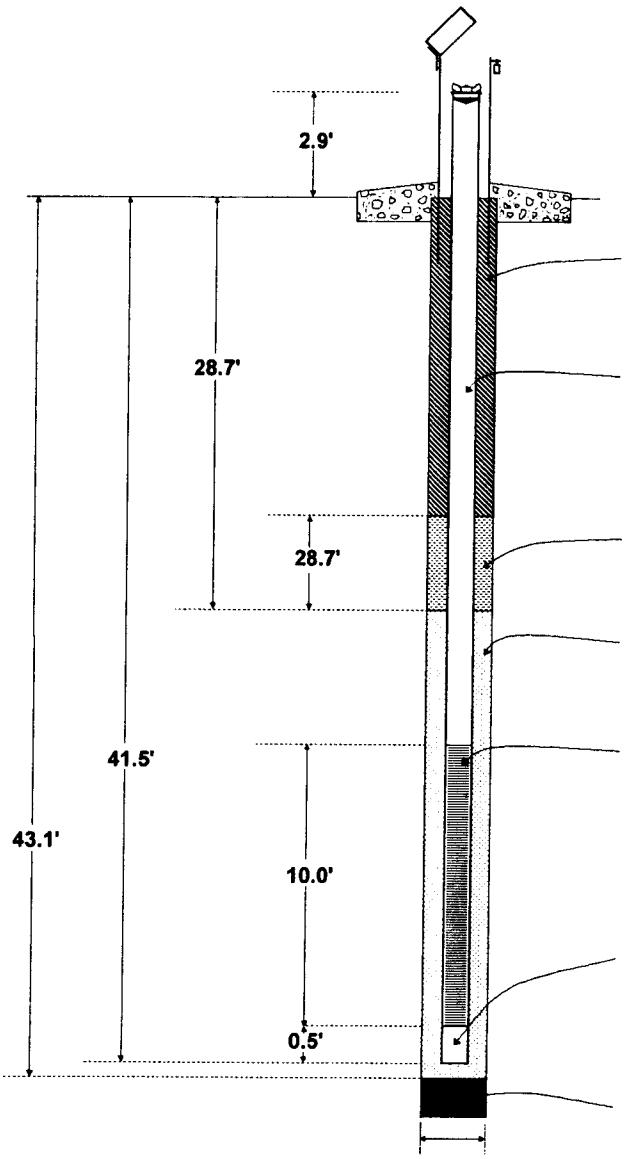

SURFACE PROTECTION

Type: 6" Steel Pipe w/Locking Cover

Top of Riser: 585.16 (ft) (NAVD 88)

Ground Surface: 582.3 (ft) (NAVD 88)

SURFACE SEAL

Type: See Primary Seal

RISER PIPE

Diameter: 2"

Type: Sch 40, NSF certified, flush thread PVC

PRIMARY SEAL

Type: Bentonite Chips

FILTER MATERIAL

Type: 10/20 Silica Sand

SCREEN

Diameter: 2"

Type: Sch 40, NSF certified, flush thread PVC

Slot dimensions: 0.010"

SEDIMENT TRAP

Diameter: 2"

Type: Sch 40, NSF certified, flush thread PVC

LOWER SEAL

Type: Bentonite Chips

BORING DIAMETER

DIAMETER: 6": 0-29', 4.8": 29'-43.1'

*Note-Diagram not shown to scale

INSTALLATION METHOD: Boring drilled to completion; placed lower bentonite seal from 101.0'-43.1'; set screen & riser pipe w/stainless steel centralizers; placed filter; surged filter; topped off filter; placed bentonite seal; installed protective cover w/concrete pad at surface.

NOTES: Developed by air lifting 250 gallons of water.

BLACK & VEATCH

MONITORING WELL

MONITORING WELL NO. MW-383S

SHEET 1 OF 1

CLIENT	PROJECT	PROJECT NO.
Detroit Edison	Fermi 3 COL Application	147483

PROJECT LOCATION	COORDINATES	TOP OF RISER ELEVATION (DATUM)	DATE
Monroe, MI	N 5809.1' E 3432.7'	584.15 ft (NAVD 88)	05/16/07

STRATUM MONITORED
Sandy Lean Clay, Lean Clay

INSPECTOR	CHECKED BY	APPROVED BY
Ohlmacher	Meyer	Meyer

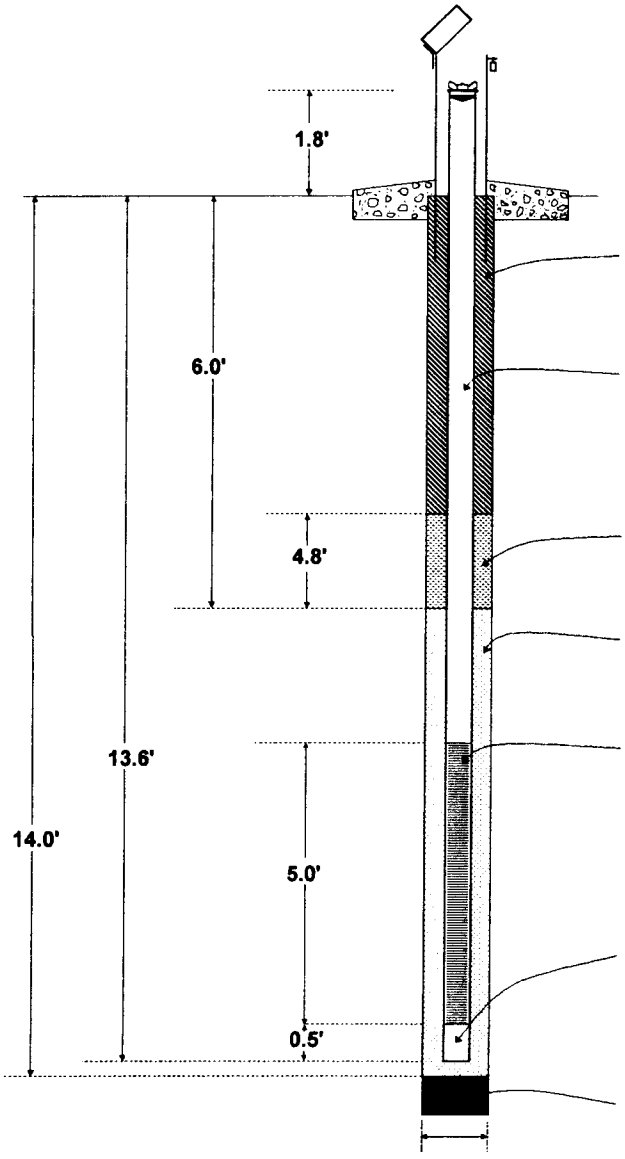

SURFACE PROTECTION
Type: 6" Steel Pipe w/Locking Cover
Top of Riser: 584.15 (ft) (NAVD 88)
Ground Surface: 582.4 (ft) (NAVD 88)

SURFACE SEAL
Type: See Primary Seal

RISER PIPE
Diameter: 2"
Type: Sch 40, NSF certified, flush thread PVC

PRIMARY SEAL
Type: Bentonite Chips

FILTER MATERIAL
Type: 10/20 Silica Sand

SCREEN
Diameter: 2"
Type: Sch 40, NSF certified, flush thread PVC
Slot dimensions: 0.010"

SEDIMENT TRAP
Diameter: 2"
Type: Sch 40, NSF certified, flush thread PVC

LOWER SEAL
Type: Bentonite Chips

BORING DIAMETER
DIAMETER: 8"
*Note-Diagram not shown to scale

INSTALLATION METHOD: Boring drilled to completion; placed lower seal from 16.5'-14.0'; set screen & riser pipe; placed filter; no water so not surged; topped off filter; placed bentonite seal; installed protective cover w/concrete pad at surface.

NOTES: Developed by pumping 34.8 gallons of water over a multiple day period - pumped dry multiple times.

BLACK & VEATCH

MONITORING WELL

MONITORING WELL NO. MW-384D

SHEET 1 OF 1

CLIENT	PROJECT	PROJECT NO.
Detroit Edison	Fermi 3 COL Application	147483

PROJECT LOCATION	COORDINATES	TOP OF RISER ELEVATION (DATUM)	DATE
Monroe, MI	N 5537.6' E 4402.8'	583.98 ft (NAVD 88)	05/31/07

STRATUM MONITORED: Bass Islands Group Dolomite

INSPECTOR	CHECKED BY	APPROVED BY
Ohlmacher GCO	Meyer EM	Meyer EM

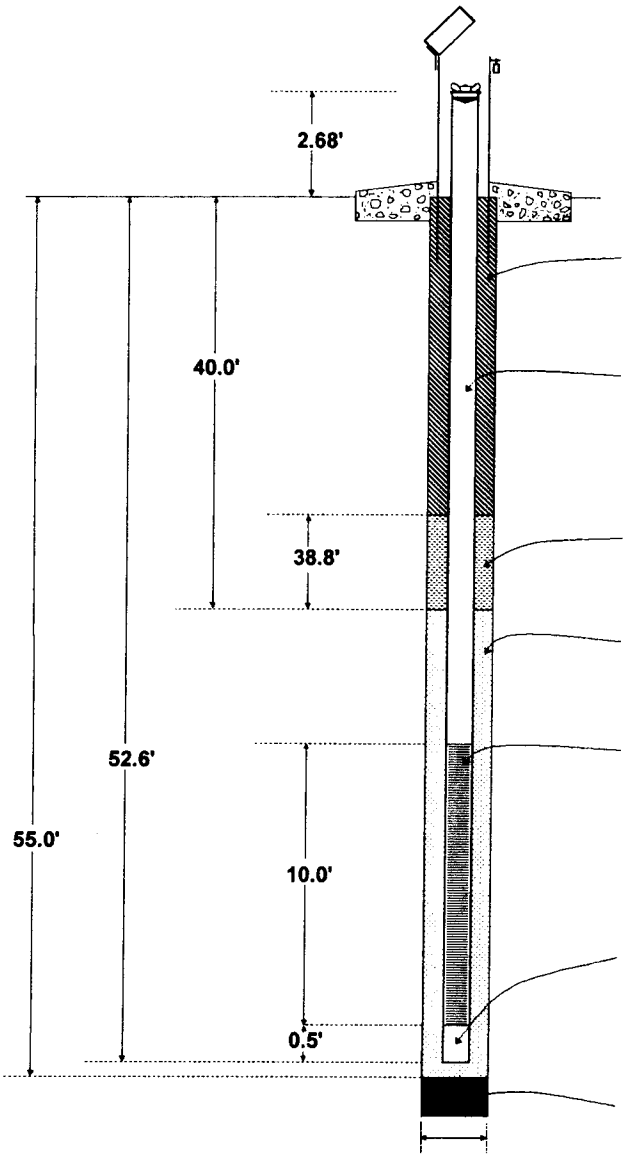

SURFACE PROTECTION

Type: 6" Steel Pipe w/Locking Cover

Top of Riser: 583.98 (ft) (NAVD 88)

Ground Surface: 581.3 (ft) (NAVD 88)

SURFACE SEAL

Type: See Primary Seal

RISER PIPE

Diameter: 2"

Type: Sch 40, NSF certified, flush thread PVC

PRIMARY SEAL

Type: Bentonite Chips

FILTER MATERIAL

Type: 10/20 Silica Sand

SCREEN

Diameter: 2"

Type: Sch 40, NSF certified, flush thread PVC

Slot dimensions: 0.010"

SEDIMENT TRAP

Diameter: 2"

Type: Sch 40, NSF certified, flush thread PVC

LOWER SEAL

Type: Bentonite Chips

BORING DIAMETER

DIAMETER: 6": 0-33', 4.8": 33'-55.0'

*Note-Diagram not shown to scale

INSTALLATION METHOD: Boring drilled to completion; placed lower bentonite seal from 101.0'-55.0'; set screen & riser pipe w/stainless steel centralizers; placed filter; surged filter; topped off filter; placed bentonite seal; installed protective cover w/concrete pad at surface.

NOTES: Developed by pumping 110 gallons of water.

BLACK & VEATCH

MONITORING WELL

MONITORING WELL NO. MW-384S

SHEET 1 OF 1

CLIENT	PROJECT	PROJECT NO.
Detroit Edison	Fermi 3 COL Application	147483

PROJECT LOCATION	COORDINATES	TOP OF RISER ELEVATION (DATUM)	DATE
Monroe, MI	N 5532.6' E 4403.9'	583.66 ft (NAVD 88)	05/18/07

STRATUM MONITORED
Fat Clay, Lean Clay

INSPECTOR	CHECKED BY	APPROVED BY
Ohlmacher GCO	Meyer	Meyer

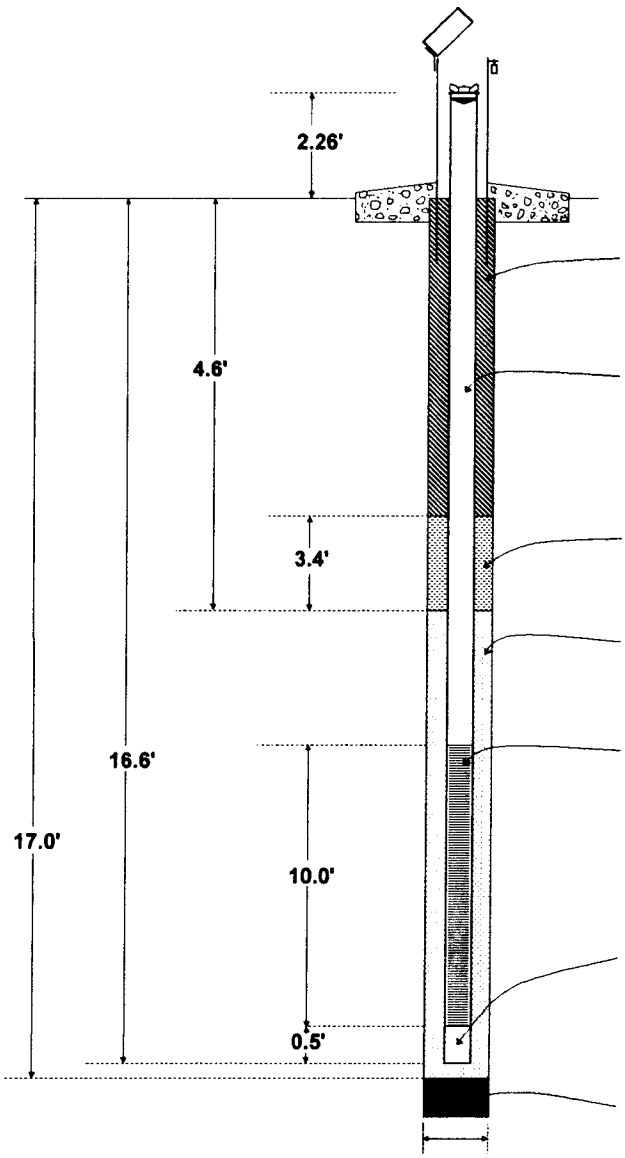

SURFACE PROTECTION
Type: 6" Steel Pipe w/Locking Cover
Top of Riser: 583.66 (ft) (NAVD 88)
Ground Surface: 581.38 (ft) (NAVD 88)

SURFACE SEAL
Type: See Primary Seal

RISER PIPE
Diameter: 2"
Type: Sch 40, NSF certified, flush thread PVC

PRIMARY SEAL
Type: Bentonite Chips

FILTER MATERIAL
Type: 10/20 Silica Sand

SCREEN
Diameter: 2"
Type: Sch 40, NSF certified, flush thread PVC
Slot dimensions: 0.010"

SEDIMENT TRAP
Diameter: 2"
Type: Sch 40, NSF certified, flush thread PVC

LOWER SEAL
Type: None

BORING DIAMETER
DIAMETER: 8"
*Note-Diagram not shown to scale

INSTALLATION METHOD: Boring drilled to completion; set screen & riser pipe; placed filter; surged filter; topped off filter; placed bentonite seal; installed protective cover w/concrete pad at surface.

NOTES: Developed by pumping 76.5 gallons of water over a multiple day period - pumped dry multiple times.

BLACK & VEATCH

MONITORING WELL

MONITORING WELL NO. MW-386D
SHEET 1 OF 1

CLIENT	PROJECT	PROJECT NO.
Detroit Edison	Fermi 3 COL Application	147483

PROJECT LOCATION	COORDINATES	TOP OF RISER ELEVATION (DATUM)	DATE
Monroe, MI	N 6336.7' E 5203.8'	583.91 ft (NAVD 88)	06/06/07

STRATUM MONITORED
Bass Islands Group Dolomite

INSPECTOR	CHECKED BY	APPROVED BY
Duncan	Meyer	Meyer

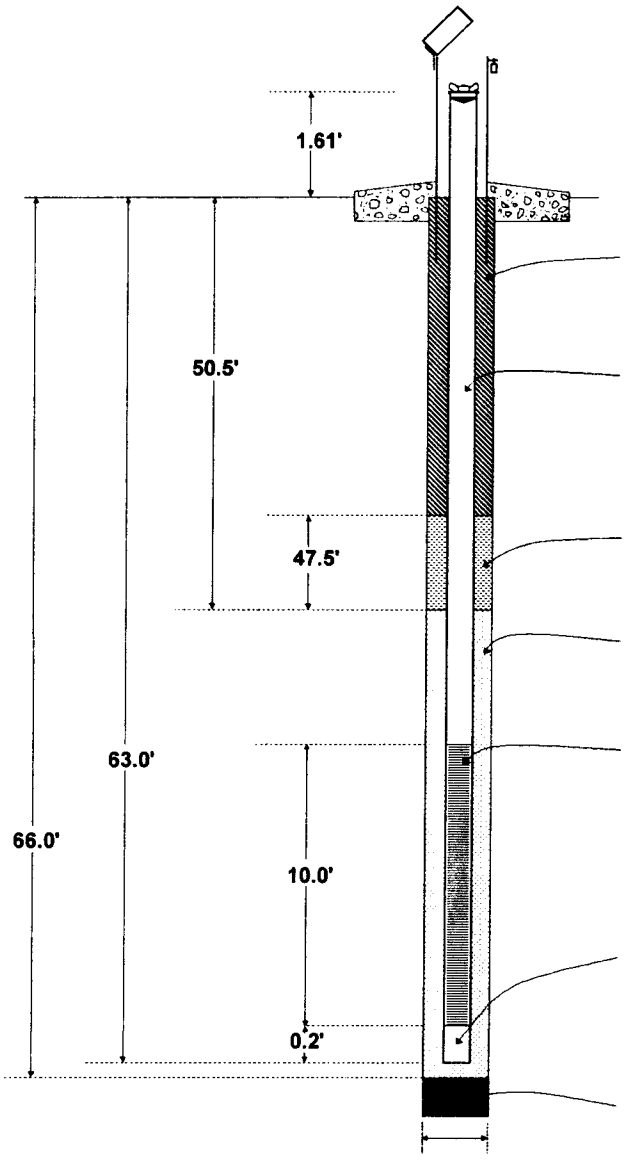

SURFACE PROTECTION
Type: 6" Steel Pipe w/Locking Cover
Top of Riser: 583.91 (ft) (NAVD 88)
Ground Surface: 582.3 (ft) (NAVD 88)

SURFACE SEAL
Type: See Primary Seal

RISER PIPE
Diameter: 2"
Type: 304 flush thread stainless steel

PRIMARY SEAL
Type: Bentonite Chips

FILTER MATERIAL
Type: 10/20 Silica Sand

SCREEN
Diameter: 2"
Type: 304 flush thread stainless steel, wire wrapped
Slot dimensions: 0.010"

SEDIMENT TRAP
Diameter: 2"
Type: 304 flush thread stainless steel

LOWER SEAL
Type: Bentonite Chips

BORING DIAMETER
DIAMETER: 6": 0-28.5', 4.8": 28.5'-66.0'
*Note-Diagram not shown to scale

INSTALLATION METHOD: Boring drilled to completion; on 06/03/08 placed lower bentonite seal from 91.5'-66.0'; problems during installation required well to be pulled & redrilled to 66.0'; on 06/06/07 set screen & riser pipe w/stainless steel centralizers; placed filter; surged filter; topped off filter; placed bentonite seal; installed protective cover w/concrete pad at surface.

NOTES: Developed by pumping 455 gallons of water.

BLACK & VEATCH

MONITORING WELL

MONITORING WELL NO. MW-386S

SHEET 1 OF 1

CLIENT	PROJECT	PROJECT NO.
Detroit Edison	Fermi 3 COL Application	147483

PROJECT LOCATION	COORDINATES	TOP OF RISER ELEVATION (DATUM)	DATE
Monroe, MI	N 6343.9' E 5203.6'	584.18 ft (NAVD 88)	05/23/07

STRATUM MONITORED
Lean Clay, Fat Clay

INSPECTOR	CHECKED BY	APPROVED BY
Deeken	Meyer	Meyer

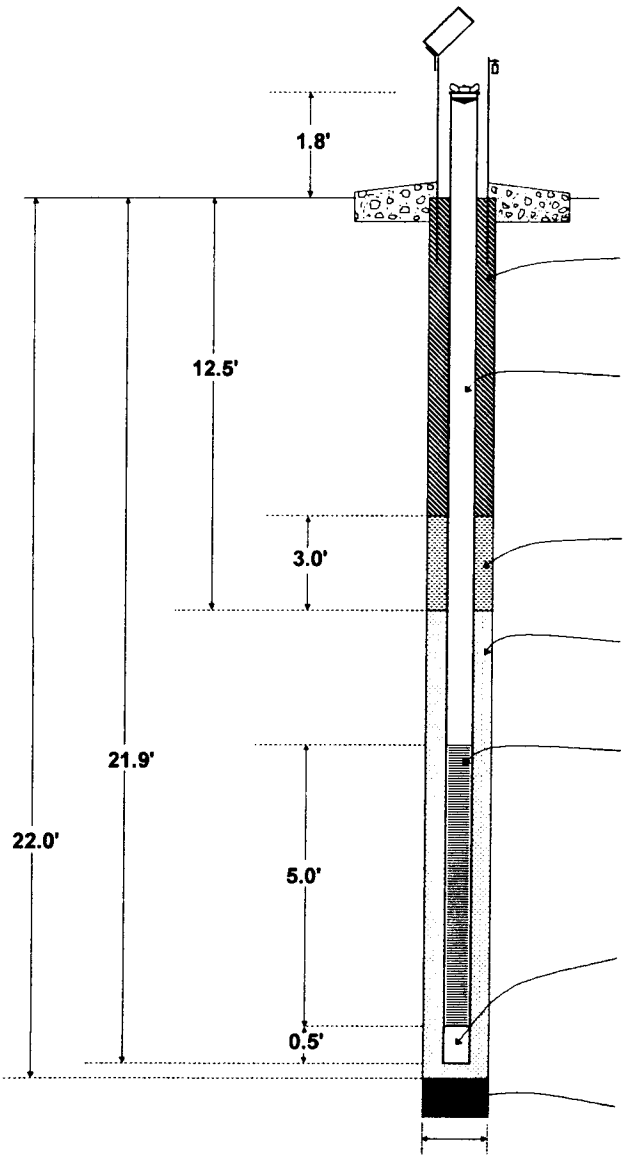

SURFACE PROTECTION
Type: 6" Steel Pipe w/Locking Cover
Top of Riser: 584.18 (ft) (NAVD 88)
Ground Surface: 582.4 (ft) (NAVD 88)

SURFACE SEAL
Type: Bentonite Chips

RISER PIPE
Diameter: 2"
Type: 304 flush thread stainless steel

PRIMARY SEAL
Type: Bentonite Chips

FILTER MATERIAL
Type: 10/20 Silica Sand

SCREEN
Diameter: 2"
Type: 304 flush thread stainless steel, wire wrapped
Slot dimensions: 0.010"

SEDIMENT TRAP
Diameter: 2"
Type: 304 flush thread stainless steel

LOWER SEAL
Type: None

BORING DIAMETER
DIAMETER: 8"
*Note-Diagram not shown to scale

INSTALLATION METHOD: Boring drilled to completion; set screen & riser pipe; placed filter; surged filter; topped off filter; placed bentonite seal; installed protective cover w/concrete pad at surface.

NOTES: Developed by pumping 34.5 gallons of water over a multiple day period - pumped dry multiple times.

BLACK & VEATCH

MONITORING WELL

MONITORING WELL NO. MW-387D

SHEET 1 OF 1

CLIENT	PROJECT	PROJECT NO.
Detroit Edison	Fermi 3 COL Application	147483

PROJECT LOCATION	COORDINATES	TOP OF RISER ELEVATION (DATUM)	DATE
Monroe, MI	N 6660.2' E 4150.1'	582.29 ft (NAVD 88)	06/01/07

STRATUM MONITORED
Lean Clay, Bass Islands Group Dolomite

INSPECTOR	CHECKED BY	APPROVED BY
Duncan	Meyer	Meyer

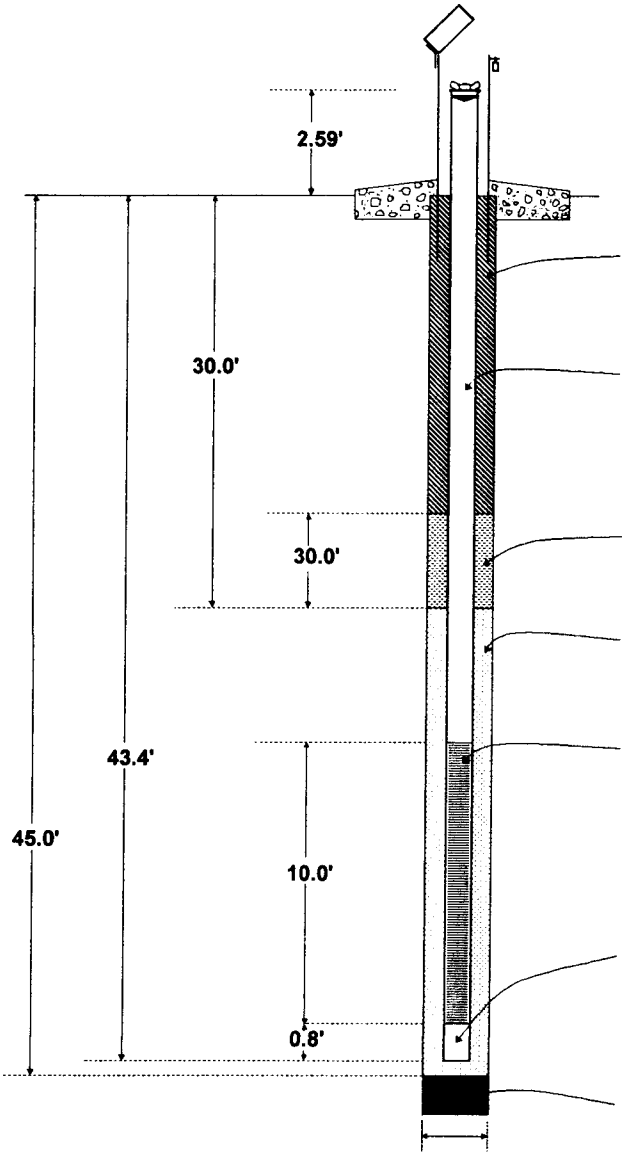

SURFACE PROTECTION
Type: 6" Steel Pipe w/Locking Cover
Top of Riser: 582.29 (ft) (NAVD 88)
Ground Surface: 579.7 (ft) (NAVD 88)

SURFACE SEAL
Type: See Primary Seal

RISER PIPE
Diameter: 2"
Type: 304 flush thread stainless steel

PRIMARY SEAL
Type: Bentonite Chips

FILTER MATERIAL
Type: 10/20 Silica Sand

SCREEN
Diameter: 2"
Type: 304 flush thread stainless steel, wire wrapped
Slot dimensions: 0.010"

SEDIMENT TRAP
Diameter: 2"
Type: 304 flush thread stainless steel

LOWER SEAL
Type: Bentonite Chips

BORING DIAMETER
DIAMETER: 6": 0-30.7', 4.8": 30.7'-45.0'
*Note-Diagram not shown to scale

INSTALLATION METHOD: Boring drilled to completion; placed lower bentonite seal from 103.5'-45.0'; set screen & riser pipe w/stainless steel centralizers; placed filter; surged filter; topped off filter; placed bentonite seal & hydrated; installed protective cover w/concrete pad at surface.

NOTES: Developed by pumping 142 gallons of water.

BLACK & VEATCH

MONITORING WELL

MONITORING WELL NO. MW-387S

SHEET 1 OF 1

CLIENT	PROJECT	PROJECT NO.
Detroit Edison	Fermi 3 COL Application	147483

PROJECT LOCATION	COORDINATES	TOP OF RISER ELEVATION (DATUM)	DATE
Monroe, MI	N 6665.8' E 4148.2'	582.16 ft (NAVD 88)	06/01/07

STRATUM MONITORED: Boulders, Organic Soil, Lean Clay

INSPECTOR	CHECKED BY	APPROVED BY
Duncan	Meyer	Meyer

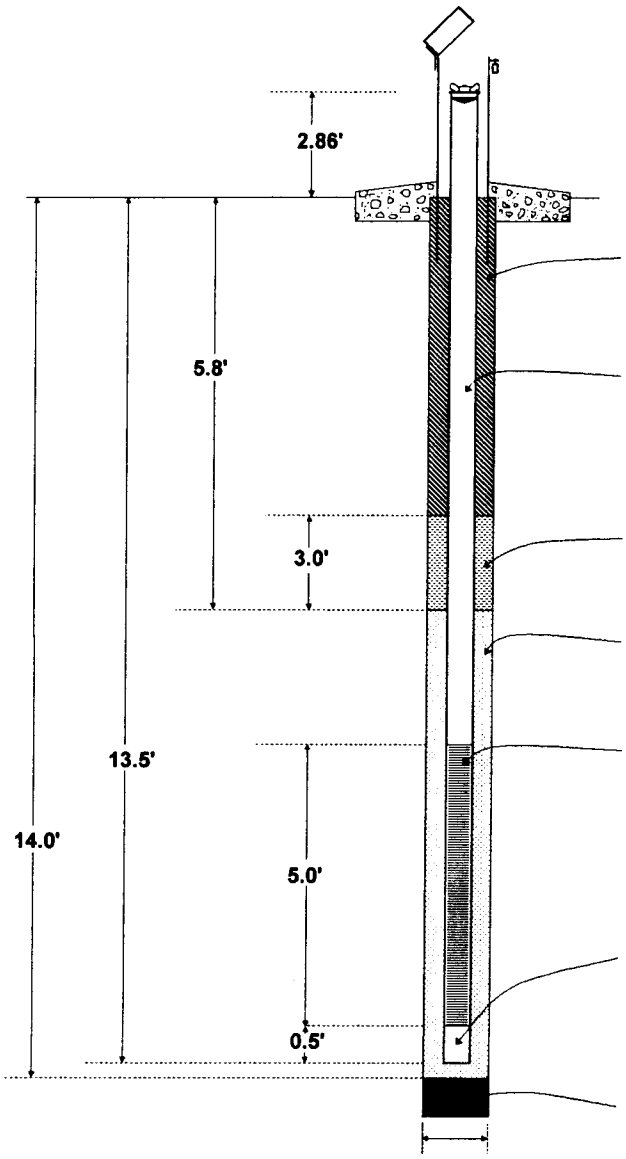

SURFACE PROTECTION
Type: 6" Steel Pipe w/Locking Cover
Top of Riser: 582.16 (ft) (NAVD 88)
Ground Surface: 579.3 (ft) (NAVD 88)

SURFACE SEAL
Type: See Primary Seal

RISER PIPE
Diameter: 2"
Type: 304 flush thread stainless steel

PRIMARY SEAL
Type: Bentonite Chips

FILTER MATERIAL
Type: 10/20 Silica Sand

SCREEN
Diameter: 2"
Type: 304 flush thread stainless steel, wire wrapped
Slot dimensions: 0.010"

SEDIMENT TRAP
Diameter: 2"
Type: 304 flush thread stainless steel

LOWER SEAL
Type: Bentonite Chips

BORING DIAMETER
DIAMETER: 6"
*Note-Diagram not shown to scale

INSTALLATION METHOD: Boring drilled to completion; placed lower bentonite seal from 16.2'-14.0'; set screen & riser pipe; placed filter; surged filter; topped off filter; placed bentonite seal & hydrated; installed protective cover w/concrete pad at surface.

NOTES: Developed by pumping 44 gallons of water over multiple days.

BLACK & VEATCH

MONITORING WELL

MONITORING WELL NO. MW-388S

SHEET 1 OF 1

CLIENT	PROJECT	PROJECT NO.
Detroit Edison	Fermi 3 COL Application	147483

PROJECT LOCATION	COORDINATES	TOP OF RISER ELEVATION (DATUM)	DATE
Monroe, MI	N 8082.4' E 2168.8'	577.6 ft (NAVD 88)	05/30/07

STRATUM MONITORED: Fat Clay

INSPECTOR	CHECKED BY	APPROVED BY
Ohlmacher	Meyer	Meyer

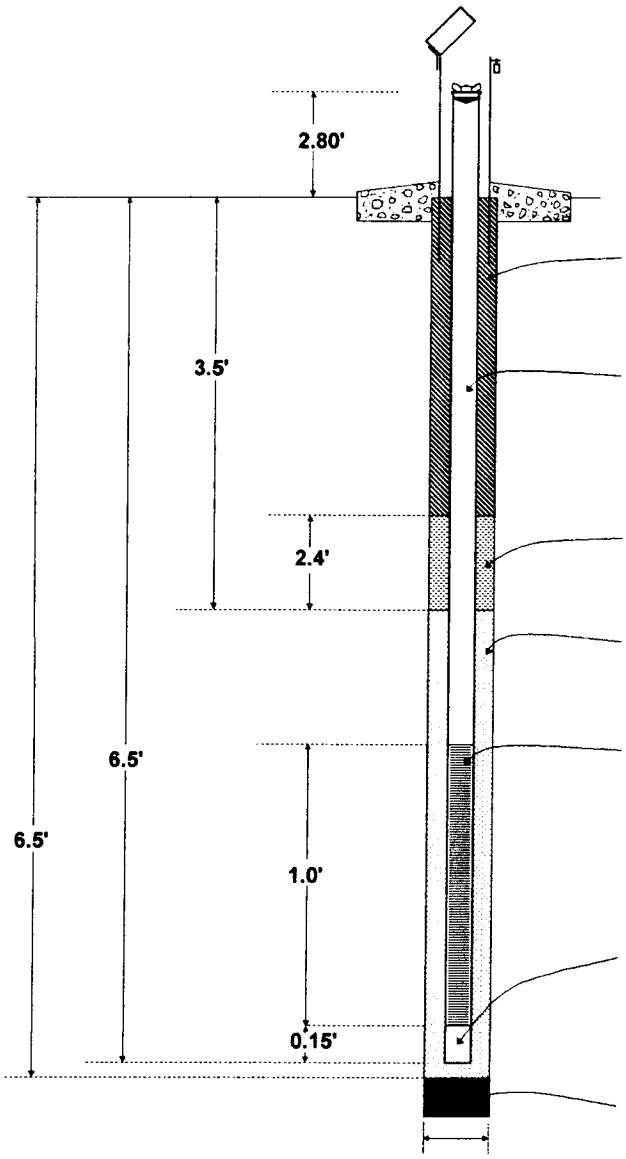

SURFACE PROTECTION

Type: 6" Steel Pipe w/Locking Cover

Top of Riser: 577.6 (ft) (NAVD 88)

Ground Surface: 574.8 (ft) (NAVD 88)

SURFACE SEAL

Type: See Primary Sealm

RISER PIPE

Diameter: 2"

Type: Sch 40, NSF certified, flush thread PVC

PRIMARY SEAL

Type: Bentonite Chips

FILTER MATERIAL

Type: 10/20 Silica Sand

SCREEN

Diameter: 2"

Type: Sch 40, NSF certified, flush thread PVC

Slot dimensions: 0.010"

SEDIMENT TRAP

Diameter: 2"

Type: Sch 40, NSF certified, PVC cap

LOWER SEAL

Type: None

BORING DIAMETER

DIAMETER: 8"

*Note-Diagram not shown to scale

INSTALLATION METHOD: Boring drilled to completion; set screen & riser; placed filter; not surged (no water); placed bentonite seal; installed protective cover w/concrete pad at surface.

NOTES: Bottom cap attached w/stainless steel screws. Dry at time of installation - not developed.

BLACK & VEATCH

MONITORING WELL

MONITORING WELL NO. MW-390S

SHEET 1 OF 1

CLIENT	PROJECT	PROJECT NO.
Detroit Edison	Fermi 3 COL Application	147483

PROJECT LOCATION	COORDINATES	TOP OF RISER ELEVATION (DATUM)	DATE
Monroe, MI	N 7960.1' E 4245.7'	582.09 ft (NAVD 88)	06/01/07

STRATUM MONITORED

Gravelly Cobbles, Fat Clay, Lean Clay

INSPECTOR	CHECKED BY	APPROVED BY
Duncan	Meyer	Meyer

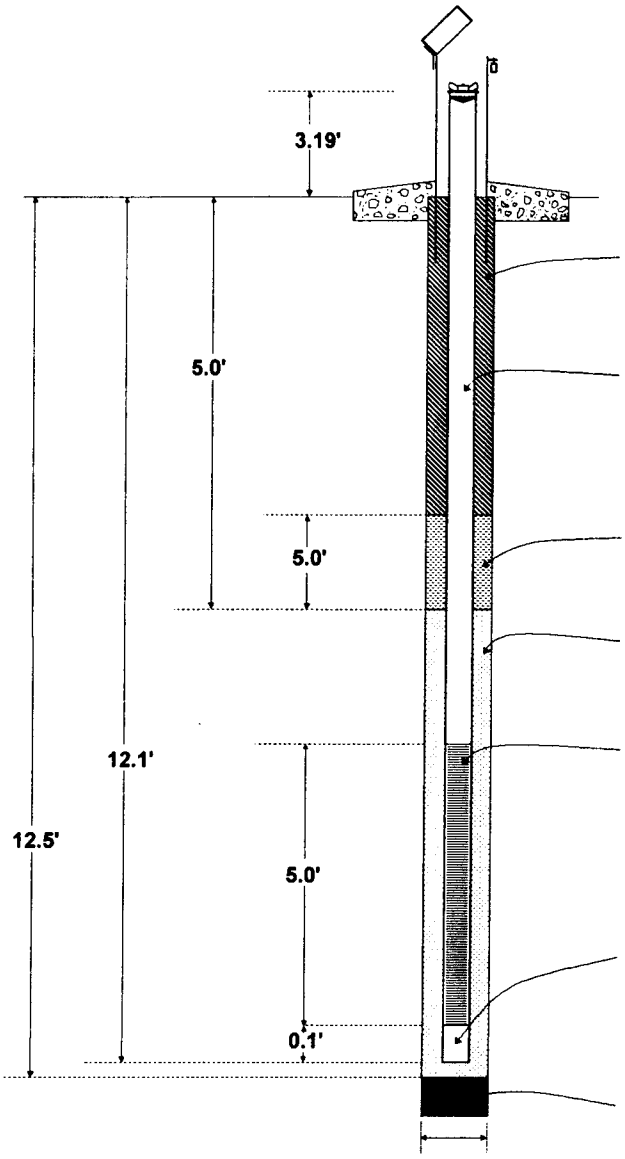

SURFACE PROTECTION

Type: 6" Steel Pipe w/Locking Cover

Top of Riser: 582.09 (ft) (NAVD 88)

Ground Surface: 578.9 (ft) (NAVD 88)

SURFACE SEAL

Type: See Primary Seal

RISER PIPE

Diameter: 2"

Type: Sch 40, NSF certified, flush thread PVC

PRIMARY SEAL

Type: Bentonite Chips

FILTER MATERIAL

Type: 10/20 Silica Sand

SCREEN

Diameter: 2"

Type: Sch 40, NSF certified, flush thread PVC

Slot dimensions: 0.010"

SEDIMENT TRAP

Diameter: 2"

Type: Sch 40, NSF certified, flush thread PVC

LOWER SEAL

Type: Bentonite Chips

BORING DIAMETER

DIAMETER: 6"

*Note-Diagram not shown to scale

INSTALLATION METHOD: Boring drilled to completion; placed lower bentonite seal from 16.5'-12.5'; set screen & riser pipe; placed filter; surged filter; topped off filter; placed bentonite seal; installed protective cover w/concrete pad at surface.

NOTES: Developed by pumping 130 gallons of water.

BLACK & VEATCH

MONITORING WELL

MONITORING WELL NO. MW-391D

SHEET 1 OF 1

CLIENT	PROJECT	PROJECT NO.
Detroit Edison	Fermi 3 COL Application	147483

PROJECT LOCATION	COORDINATES	TOP OF RISER ELEVATION (DATUM)	DATE
Monroe, MI	N 8240.3' E 5237.2'	581.17 ft (NAVD 88)	06/02/07

STRATUM MONITORED
Bass Islands Group Dolomite & Shale

INSPECTOR	CHECKED BY	APPROVED BY
Ohlmacher/Duncan	Meyer	Meyer

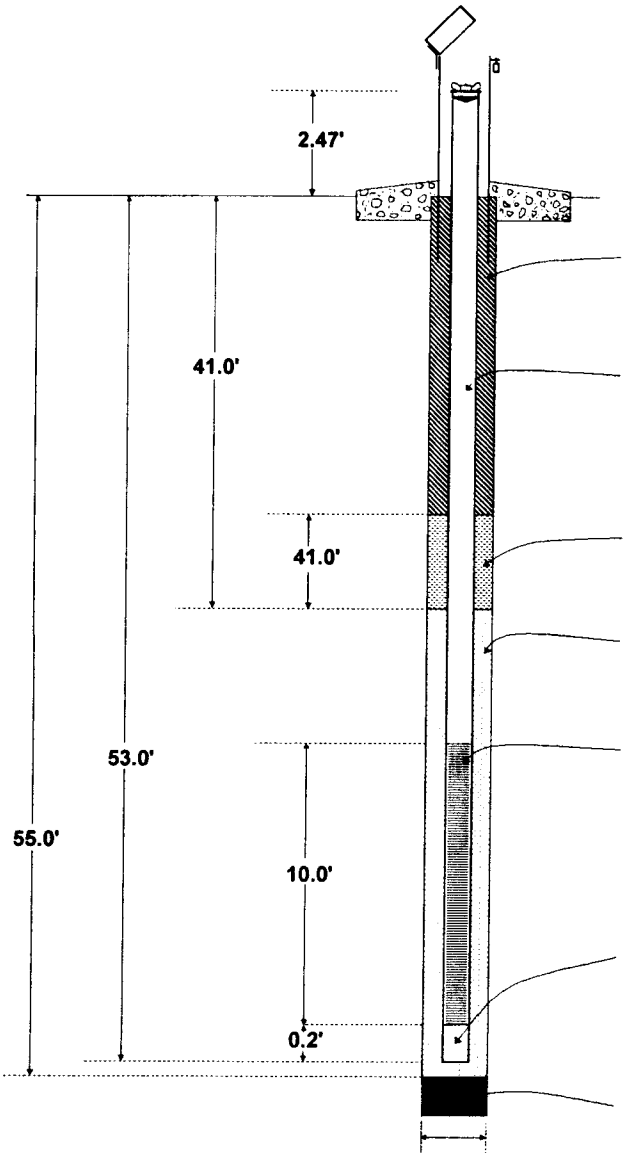

SURFACE PROTECTION
Type: 6" Steel Pipe w/Locking Cover
Top of Riser: 581.17 (ft) (NAVD 88)
Ground Surface: 578.7 (ft) (NAVD 88)

SURFACE SEAL
Type: See Primary Seal

RISER PIPE
Diameter: 2"
Type: Sch 40, NSF certified, flush thread PVC

PRIMARY SEAL
Type: Bentonite Chips

FILTER MATERIAL
Type: 10/20 Silica Sand

SCREEN
Diameter: 2"
Type: Sch 40, NSF certified, flush thread PVC
Slot dimensions: 0.010"

SEDIMENT TRAP
Diameter: 2"
Type: Sch 40, NSF certified, flush thread PVC

LOWER SEAL
Type: Bentonite Chips

BORING DIAMETER
DIAMETER: 6": 0-30', 4.8": 30'-55'
*Note-Diagram not shown to scale

INSTALLATION METHOD: Boring drilled to completion; placed lower bentonite seal from 101.0'-55.0'; set screen & riser pipe w/stainless steel centralizers; placed filter; surged filter; placed bentonite seal; installed protective cover w/concrete pad at surface.

NOTES: Developed by pumping 141 gallons of water. Pumped on two separate days.

BLACK & VEATCH

MONITORING WELL

MONITORING WELL NO. MW-391S

SHEET 1 OF 1

CLIENT	PROJECT	PROJECT NO.
Detroit Edison	Fermi 3 COL Application	147483

PROJECT LOCATION	COORDINATES	TOP OF RISER ELEVATION (DATUM)	DATE
Monroe, MI	N 8242.9' E 5232.9'	581.39 ft (NAVD 88)	05/30/07

STRATUM MONITORED
Boulders, Sandy Lean Clay

INSPECTOR	CHECKED BY	APPROVED BY
Duncan	Meyer	Meyer

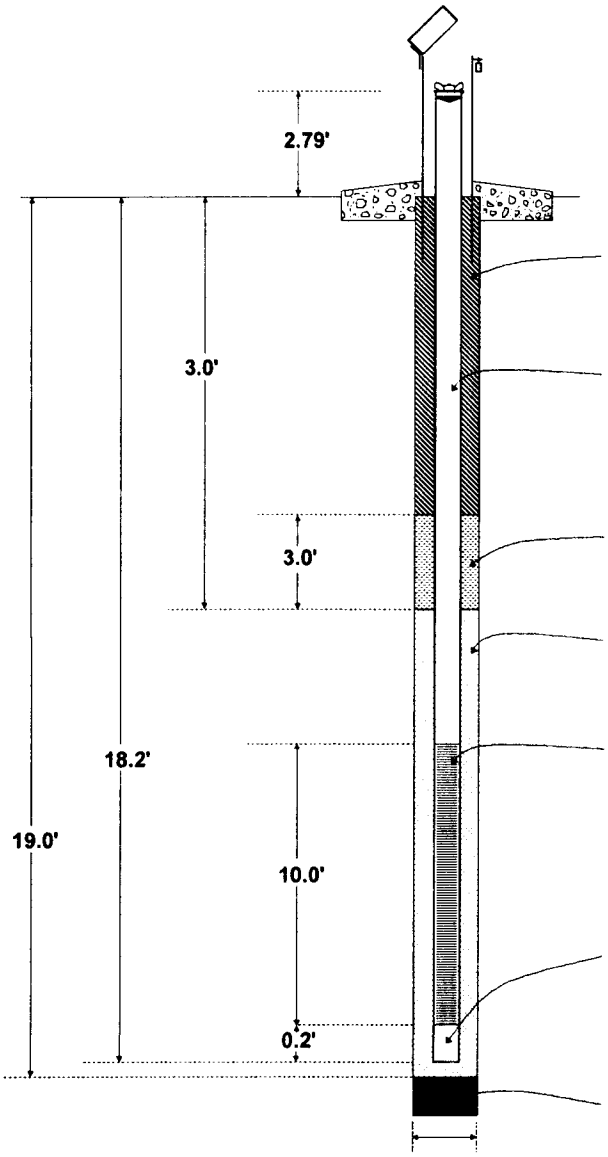

SURFACE PROTECTION
Type: 6" Steel Pipe w/Locking Cover
Top of Riser: 581.39 (ft) (NAVD 88)
Ground Surface: 578.6 (ft) (NAVD 88)

SURFACE SEAL
Type: See Primary Seal

RISER PIPE
Diameter: 2"
Type: Sch 40, NSF certified, flush thread PVC

PRIMARY SEAL
Type: Bentonite Chips

FILTER MATERIAL
Type: 10/20 Silica Sand

SCREEN
Diameter: 2"
Type: Sch 40, NSF certified, flush thread PVC
Slot dimensions: 0.010"

SEDIMENT TRAP
Diameter: 2"
Type: Sch 40, NSF certified, flush thread PVC

LOWER SEAL
Type: None

BORING DIAMETER
DIAMETER: 6"
*Note-Diagram not shown to scale

INSTALLATION METHOD: Boring drilled to completion; set screen & riser pipe; placed filter & bentonite seal; installed protective cover w/concrete pad at surface.

NOTES: Developed by pumping 105 gallons of water.

BLACK & VEATCH

MONITORING WELL

MONITORING WELL NO. MW-393D

SHEET 1 OF 1

CLIENT	PROJECT	PROJECT NO.
Detroit Edison	Fermi 3 COL Application	147483

PROJECT LOCATION	COORDINATES	TOP OF RISER ELEVATION (DATUM)	DATE
Monroe, MI	N 9367.4' E 2922.8'	578.33 ft (NAVD 88)	06/06/07

STRATUM MONITORED: Bass Islands Group Dolomite

INSPECTOR	CHECKED BY	APPROVED BY
Grainger EM for	Meyer EM	Meyer EM

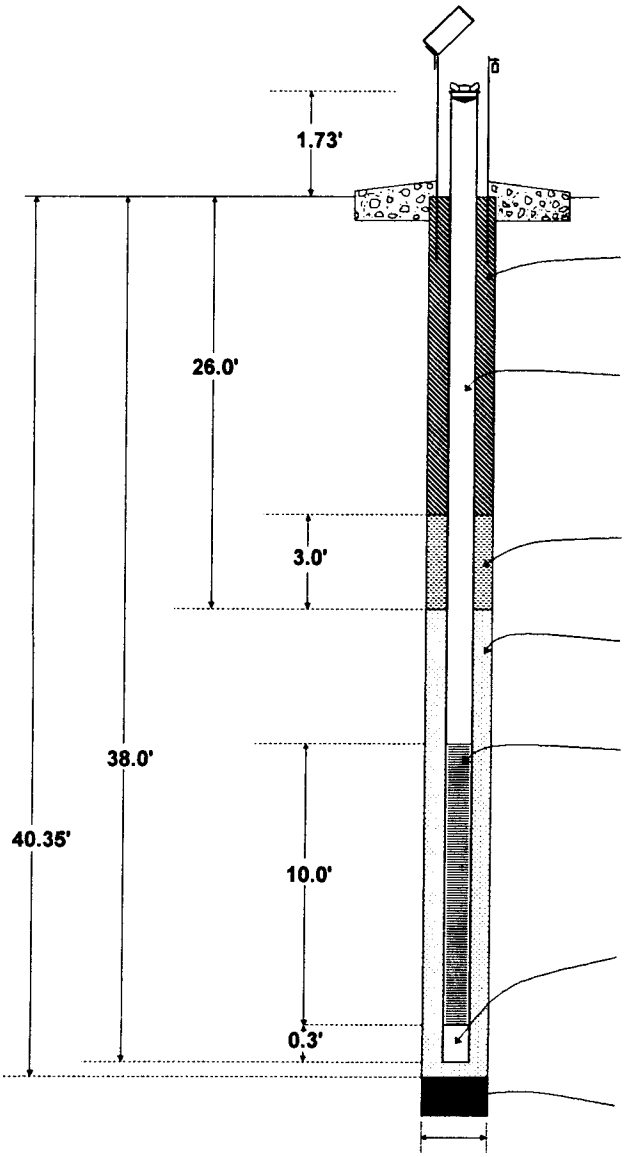

SURFACE PROTECTION

Type: 6" Steel Pipe w/Locking Cover

Top of Riser: 578.33 (ft) (NAVD 88)

Ground Surface: 576.6 (ft) (NAVD 88)

SURFACE SEAL

Type: Bentonite Chips

RISER PIPE

Diameter: 2"

Type: Sch 40, NSF certified, flush thread PVC

PRIMARY SEAL

Type: Bentonite Chips

FILTER MATERIAL

Type: 10/20 Silica Sand

SCREEN

Diameter: 2"

Type: Sch 40, NSF certified, flush thread PVC

Slot dimensions: 0.010"

SEDIMENT TRAP

Diameter: 2"

Type: Sch 40, NSF certified, flush thread PVC

LOWER SEAL

Type: Bentonite Chips

BORING DIAMETER

DIAMETER: 8": 0-14', 4.8": 14'-40.35'

*Note-Diagram not shown to scale

INSTALLATION METHOD: Boring drilled to completion; placed lower bentonite seal from 150.0'-40.35'; set screen & riser pipe w/stainless steel centralizers; placed filter; surged filter; topped off filter; placed bentonite seal; installed protective cover w/concrete pad at surface.

NOTES: Developed by pumping 695 gallons of water. Pumped on three separate days.

BLACK & VEATCH

MONITORING WELL

MONITORING WELL NO. MW-393S

SHEET 1 OF 1

CLIENT	PROJECT	PROJECT NO.
Detroit Edison	Fermi 3 COL Application	147483

PROJECT LOCATION	COORDINATES	TOP OF RISER ELEVATION (DATUM)	DATE
Monroe, MI	N 9360.0' E 2918.2'	579.35 ft (NAVD 88)	05/06/07

STRATUM MONITORED: Lean Clay

INSPECTOR	CHECKED BY	APPROVED BY
Duncan	Meyer	Meyer

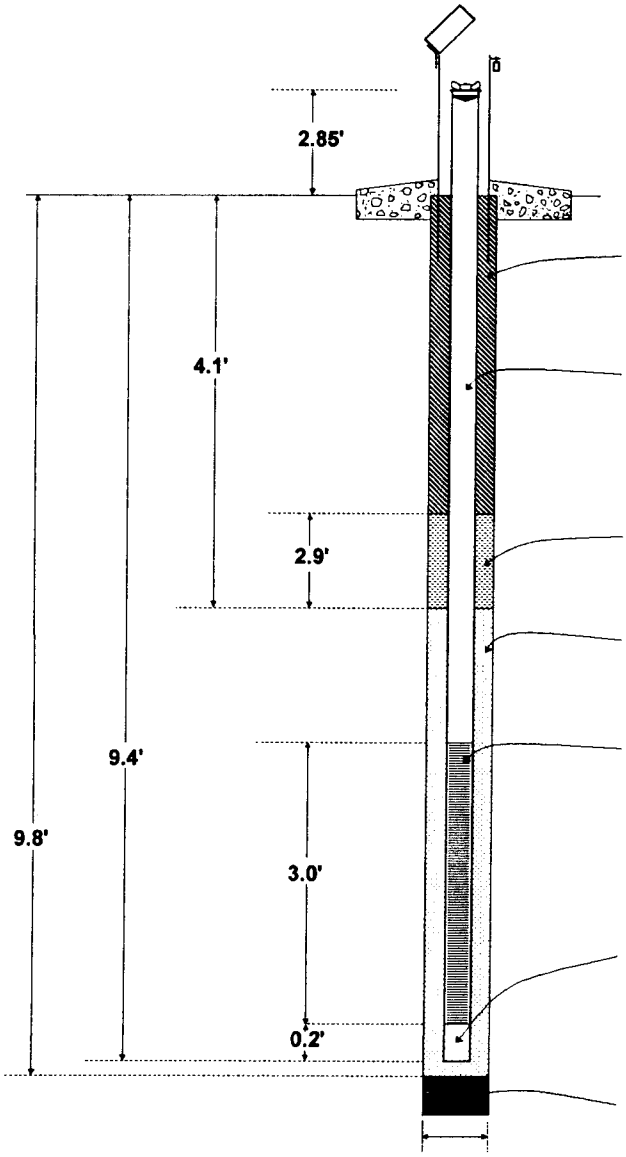

SURFACE PROTECTION

Type: 6" Steel Pipe w/Locking Cover

Top of Riser: 579.35 (ft) (NAVD 88)

Ground Surface: 576.5 (ft) (NAVD 88)

SURFACE SEAL

Type: See Primary Seal

RISER PIPE

Diameter: 2"

Type: Sch 40, NSF certified, flush thread PVC

PRIMARY SEAL

Type: Bentonite Chips

FILTER MATERIAL

Type: 10/20 Silica Sand

SCREEN

Diameter: 2"

Type: Sch 40, NSF certified, flush thread PVC

Slot dimensions: 0.010"

SEDIMENT TRAP

Diameter: 2"

Type: Sch 40, NSF certified, PVC cap

LOWER SEAL

Type: None

BORING DIAMETER

DIAMETER: 8"

*Note-Diagram not shown to scale

INSTALLATION METHOD: Boring drilled to completion; set screen & riser pipe; placed filter & bentonite seal; installed protective cover w/concrete pad at surface.

NOTES: Bottom cap attached w/stainless steel screws. Developed by pumping 12 gallons of water over a multiple day period - pumped dry multiple times.

BLACK & VEATCH

MONITORING WELL

MONITORING WELL NO. MW-395D

SHEET 1 OF 1

CLIENT	PROJECT	PROJECT NO.
Detroit Edison	Fermi 3 COL Application	147483

PROJECT LOCATION	COORDINATES	TOP OF RISER ELEVATION (DATUM)	DATE
Monroe, MI	N 8900.0' E 4600.1'	579.83 ft (NAVD 88)	06/01/07

STRATUM MONITORED: Bass Islands Group Dolomite

INSPECTOR	CHECKED BY	APPROVED BY
GCO Ohlmacher	Meyer EM	Meyer EM

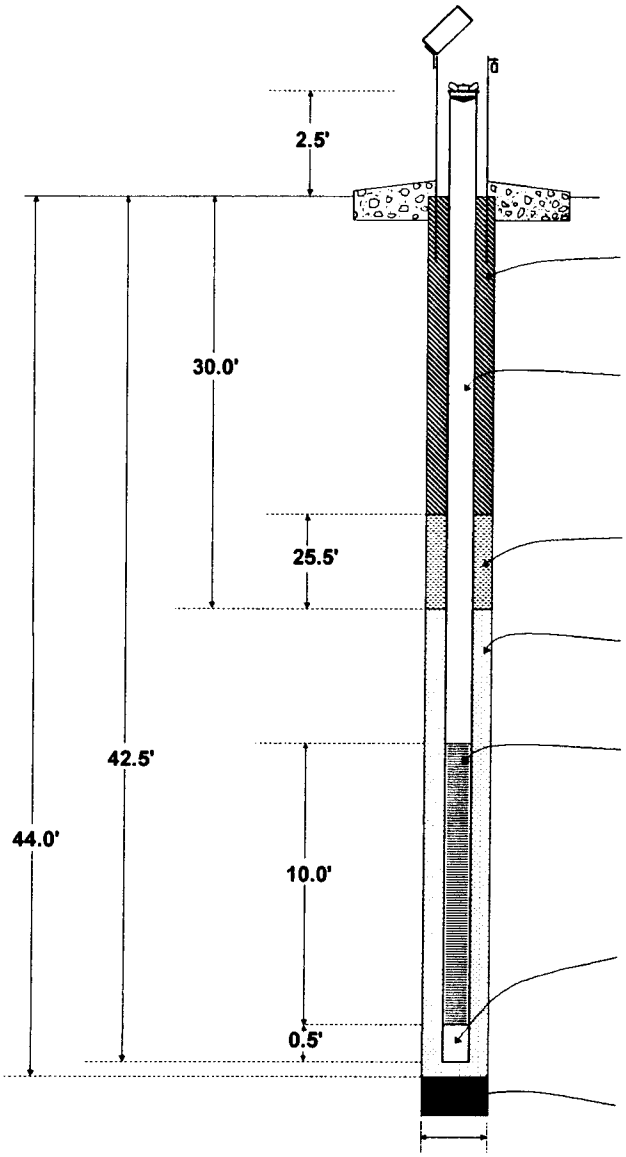

SURFACE PROTECTION

Type: 6" Steel Pipe w/Locking Cover

Top of Riser: 579.83 (ft) (NAVD 88)

Ground Surface: 577.3 (ft) (NAVD 88)

SURFACE SEAL

Type: See Primary Seal

RISER PIPE

Diameter: 2"

Type: Sch 40, NSF certified, flush thread PVC

PRIMARY SEAL

Type: Bentonite Chips

FILTER MATERIAL

Type: 10/20 Silica Sand

SCREEN

Diameter: 2"

Type: Sch 40, NSF certified, flush thread PVC

Slot dimensions: 0.010"

SEDIMENT TRAP

Diameter: 2"

Type: Sch 40, NSF certified, flush thread PVC

LOWER SEAL

Type: Bentonite Chips

BORING DIAMETER

DIAMETER: 8": 0-20.5', 4.8": 20.5-44'

*Note-Diagram not shown to scale

INSTALLATION METHOD: Boring drilled to completion; placed lower bentonite seal from 101.0'-44.0'; set screen & riser pipe w/stainless steel centralizers; placed filter; surged filter; placed bentonite seal; installed protective cover w/concrete pad at surface.

NOTES: Developed by pumping 220 gallons of water.

BLACK & VEATCH

MONITORING WELL

MONITORING WELL NO. MW-395S

SHEET 1 OF 1

CLIENT	PROJECT	PROJECT NO.
Detroit Edison	Fermi 3 COL Application	147483

PROJECT LOCATION	COORDINATES	TOP OF RISER ELEVATION (DATUM)	DATE
Monroe, MI	N 8906.2' E 4599.7'	579.90 ft (NAVD 88)	05/30/07

STRATUM MONITORED

Gravelly Cobbles, Fat Clay, Lean Clay

INSPECTOR	CHECKED BY	APPROVED BY
Duncan	Meyer	Meyer

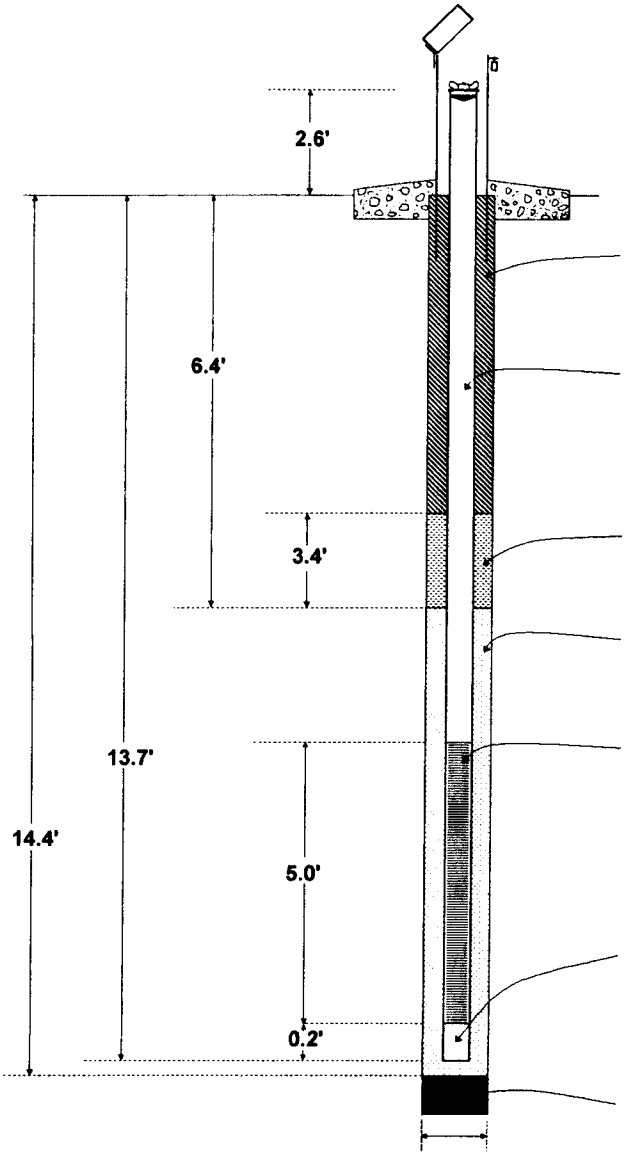

SURFACE PROTECTION

Type: 6" Steel Pipe w/Locking Cover

Top of Riser: 579.90 (ft) (NAVD 88)

Ground Surface: 577.3 (ft) (NAVD 88)

SURFACE SEAL

Type: See Primary Seal

RISER PIPE

Diameter: 2"

Type: Sch 40, NSF certified, flush thread PVC

PRIMARY SEAL

Type: Bentonite Chips

FILTER MATERIAL

Type: 10/20 Silica Sand

SCREEN

Diameter: 2"

Type: Sch 40, NSF certified, flush thread PVC

Slot dimensions: 0.010"

SEDIMENT TRAP

Diameter: 2"

Type: Sch 40, NSF certified, flush thread PVC

LOWER SEAL

Type: None

BORING DIAMETER

DIAMETER: 6"

*Note-Diagram not shown to scale

INSTALLATION METHOD: Boring drilled to completion; set screen & riser pipe; placed filter & bentonite seal; installed protective cover w/concrete pad at surface.

NOTES: Developed by pumping 255 gallons of water. Pumped on two separate days.

BLACK & VEATCH

PIEZOMETER LOG

PIEZOMETER NO. P-382S

SHEET 1 OF 1

CLIENT	PROJECT	PROJECT NO.
Detroit Edison	Fermi 3 COL Application	147483

PROJECT LOCATION	COORDINATES	TOP OF RISER ELEVATION (DATUM)	DATE
Monroe, MI	N 5730.3' E 3132.4'	578.46 ft (NAVD 88)	05/07/07

STRATUM MONITORED

Sandy Lean Clay, Organic Soil, Fat Clay, Sandy Silt

INSPECTOR	CHECKED BY	APPROVED BY
Ohlmacher	Meyer	Meyer

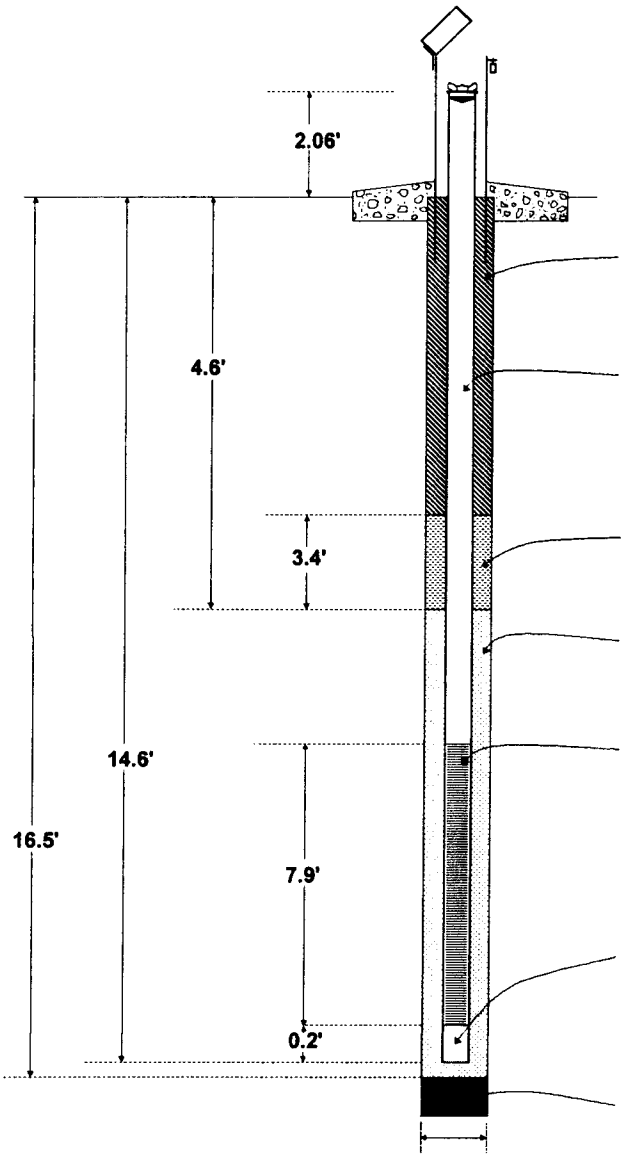

SURFACE PROTECTION

Type: 6" Steel Pipe w/Locking Cover

Top of Riser: 578.46 (ft) (NAVD 88)

Ground Surface: 576.4 (ft) (NAVD 88)

SURFACE SEAL

Type: See Primary Seal

RISER PIPE

Diameter: 2"

Type: Sch 40, NSF certified, flush thread PVC

PRIMARY SEAL

Type: Bentonite Chips

FILTER MATERIAL

Type: 10/20 Silica Sand

SCREEN

Diameter: 2"

Type: Sch 40, NSF certified, flush thread PVC

Slot dimensions: 0.010"

SEDIMENT TRAP

Diameter: 2"

Type: Sch 40, NSF certified, PVC cap

LOWER SEAL

Type: None

BORING DIAMETER

DIAMETER: 8"

*Note-Diagram not shown to scale

INSTALLATION METHOD: Boring drilled to completion; set screen & riser pipe; placed filter; surged filter; topped off filter; placed bentonite seal; installed protective cover w/concrete pad at surface.

NOTES: Bottom cap attached w/stainless steel screws. Developed by pumping 67 gallons of water over a multiple day period - pumped dry multiple times.

BLACK & VEATCH

PIEZOMETER LOG

PIEZOMETER NO. P-385D

SHEET 1 OF 1

CLIENT	PROJECT	PROJECT NO.
Detroit Edison	Fermi 3 COL Application	147483

PROJECT LOCATION	COORDINATES	TOP OF RISER ELEVATION (DATUM)	DATE
Monroe, MI	N 6201.7' E 4390.0'	583.13 ft (NAVD 88)	05/31/07

STRATUM MONITORED
Bass Islands Group Dolomite

INSPECTOR	CHECKED BY	APPROVED BY
Duncan	Meyer	Meyer

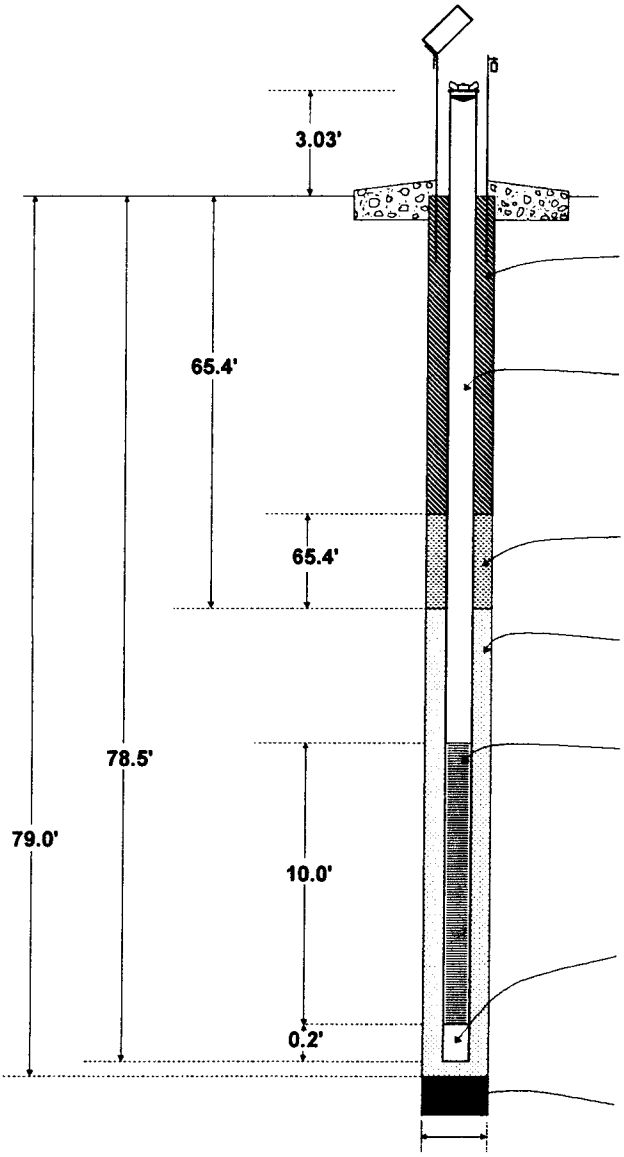

SURFACE PROTECTION
Type: 6" Steel Pipe w/Locking Cover
Top of Riser: 583.13 (ft) (NAVD 88)
Ground Surface: 580.1 (ft) (NAVD 88)

SURFACE SEAL
Type: See Primary Seal

RISER PIPE
Diameter: 2"
Type: Sch 40, NSF certified, flush thread PVC

PRIMARY SEAL
Type: Bentonite Chips

FILTER MATERIAL
Type: 10/20 Silica Sand

SCREEN
Diameter: 2"
Type: Sch 40, NSF certified, flush thread PVC
Slot dimensions: 0.010"

SEDIMENT TRAP
Diameter: 2"
Type: Sch 40, NSF certified, flush thread PVC

LOWER SEAL
Type: Bentonite Chips

BORING DIAMETER
DIAMETER: 6": 0-33.5', 4.8": 33.5'-79.0'
*Note-Diagram not shown to scale

INSTALLATION METHOD: Boring drilled to completion; placed lower bentonite seal from 102.5'-79.0'; set screen & riser pipe w/stainless steel centralizers; placed filter; surged filter; topped off filter; placed bentonite seal; installed protective cover w/concrete pad at surface.

NOTES: Developed by pumping 120 gallons of water.

BLACK & VEATCH

PIEZOMETER LOG

PIEZOMETER NO. P-385S

SHEET 1 OF 1

CLIENT	PROJECT	PROJECT NO.
Detroit Edison	Fermi 3 COL Application	147483

PROJECT LOCATION	COORDINATES	TOP OF RISER ELEVATION (DATUM)	DATE
Monroe, MI	N 6198.1' E 4385.6'	583.25 ft (NAVD 88)	06/04/07

STRATUM MONITORED
Well Graded Gravel, Lean Clay

INSPECTOR	CHECKED BY	APPROVED BY
Deeken	Meyer	Meyer

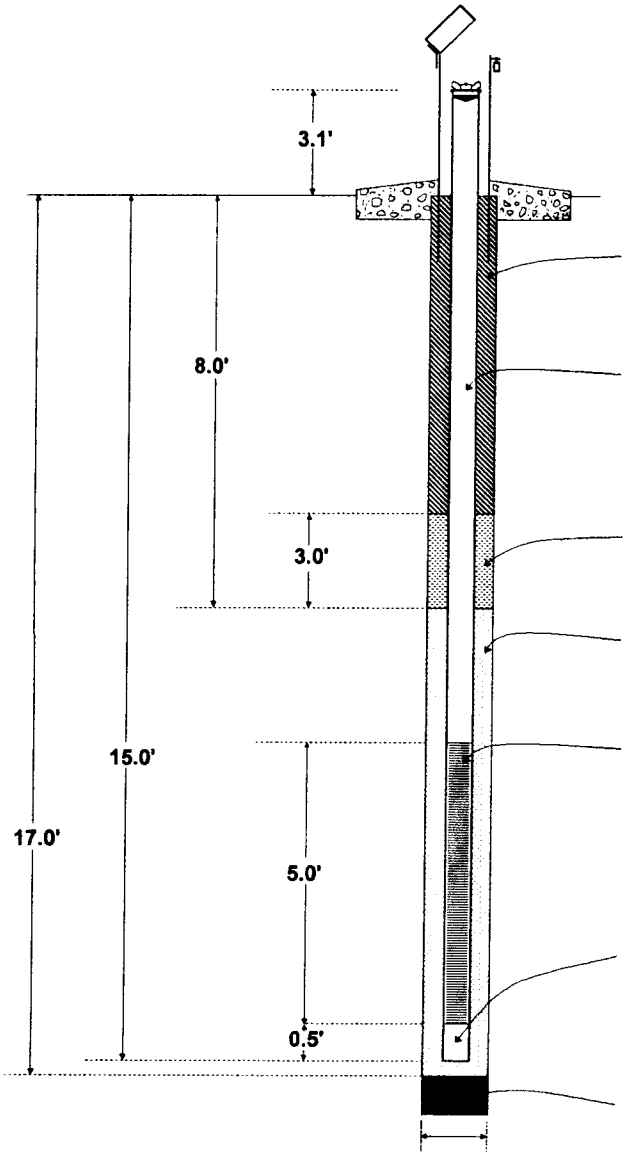

SURFACE PROTECTION
Type: 6" Steel Pipe w/Locking Cover
Top of Riser: 583.25 (ft) (NAVD 88)
Ground Surface: 580.2 (ft) (NAVD 88)

SURFACE SEAL
Type: Bentonite Chips

RISER PIPE
Diameter: 2"
Type: Sch 40, NSF certified, flush thread PVC

PRIMARY SEAL
Type: Bentonite Chips

FILTER MATERIAL
Type: 10/20 Silica Sand

SCREEN
Diameter: 2"
Type: Sch 40, NSF certified, flush thread PVC
Slot dimensions: 0.010"

SEDIMENT TRAP
Diameter: 2"
Type: Sch 40, NSF certified, flush thread PVC

LOWER SEAL
Type: None

BORING DIAMETER
DIAMETER: 8"
*Note-Diagram not shown to scale

INSTALLATION METHOD: Boring drilled to completion; set screen & riser pipe; placed filter; surged filter; topped off filter; placed bentonite seal; installed protective cover w/concrete pad at surface.

NOTES: Developed by pumping 135 gallons of water.

BLACK & VEATCH

PIEZOMETER LOG

PIEZOMETER NO. P-389S

SHEET 1 OF 1

CLIENT	PROJECT	PROJECT NO.
Detroit Edison	Fermi 3 COL Application	147483

PROJECT LOCATION	COORDINATES	TOP OF RISER ELEVATION (DATUM)	DATE
Monroe, MI	N 7821.4' E 3889.3'	579.18 ft (NAVD 88)	05/15/07

STRATUM MONITORED
Sandy Silt, Lean Clay, Sandy Lean Clay

INSPECTOR	CHECKED BY	APPROVED BY
Duncan	Meyer	Meyer

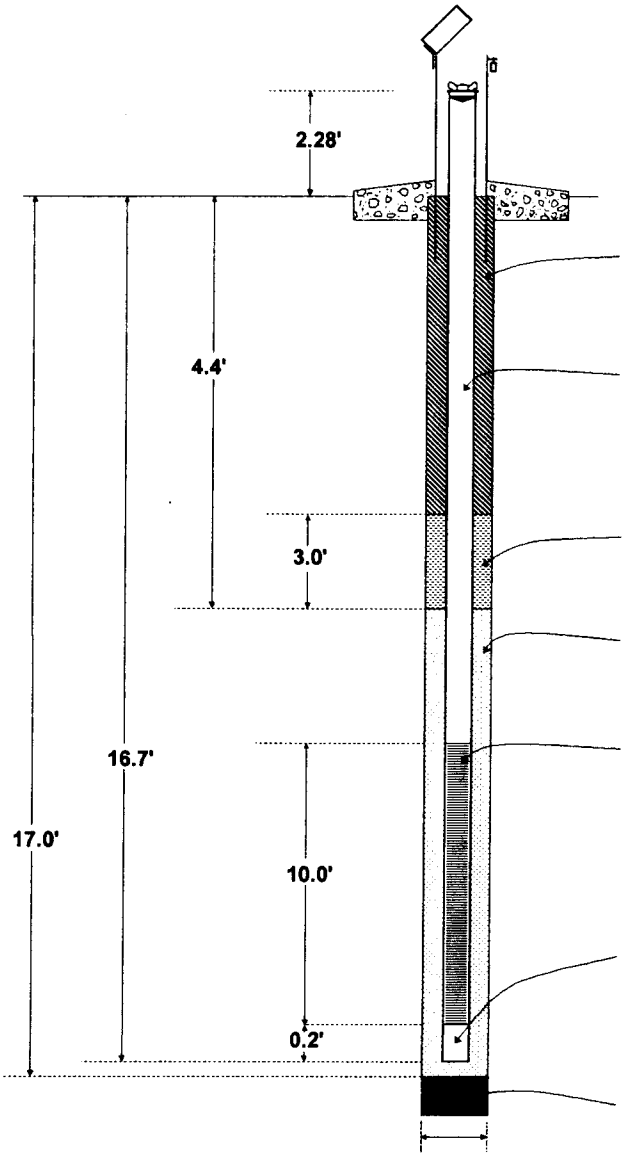

SURFACE PROTECTION
Type: 6" Steel Pipe w/Locking Cover
Top of Riser: 579.18 (ft) (NAVD 88)
Ground Surface: 576.9 (ft) (NAVD 88)

SURFACE SEAL
Type: See Primary Seal

RISER PIPE
Diameter: 2"
Type: Sch 40, NSF certified, flush thread PVC

PRIMARY SEAL
Type: Bentonite Chips

FILTER MATERIAL
Type: 10/20 Silica Sand

SCREEN
Diameter: 2"
Type: Sch 40, NSF certified, flush thread PVC
Slot dimensions: 0.010"

SEDIMENT TRAP
Diameter: 2"
Type: Sch 40, NSF certified, flush thread PVC

LOWER SEAL
Type: None

BORING DIAMETER
DIAMETER: 8"
*Note-Diagram not shown to scale

INSTALLATION METHOD: Boring drilled to completion; set screen & riser pipe; placed filter; topped off filter; placed bentonite seal; installed protective cover w/concrete pad at surface.

NOTES: Developed by pumping 104 gallons of water over a multiple day period - pumped dry multiple times.

BLACK & VEATCH

PIEZOMETER LOG

PIEZOMETER NO. P-392S

SHEET 1 OF 1

CLIENT	PROJECT	PROJECT NO.
Detroit Edison	Fermi 3 COL Application	147483

PROJECT LOCATION	COORDINATES	TOP OF RISER ELEVATION (DATUM)	DATE
Monroe, MI	N 8088.7' E 5841.5'	583.19 ft (NAVD 88)	05/29/07

STRATUM MONITORED

Rock Fill, Poorly Graded Gravel & Sand, Fat Clay

INSPECTOR	CHECKED BY	APPROVED BY
Duncan	Meyer	Meyer

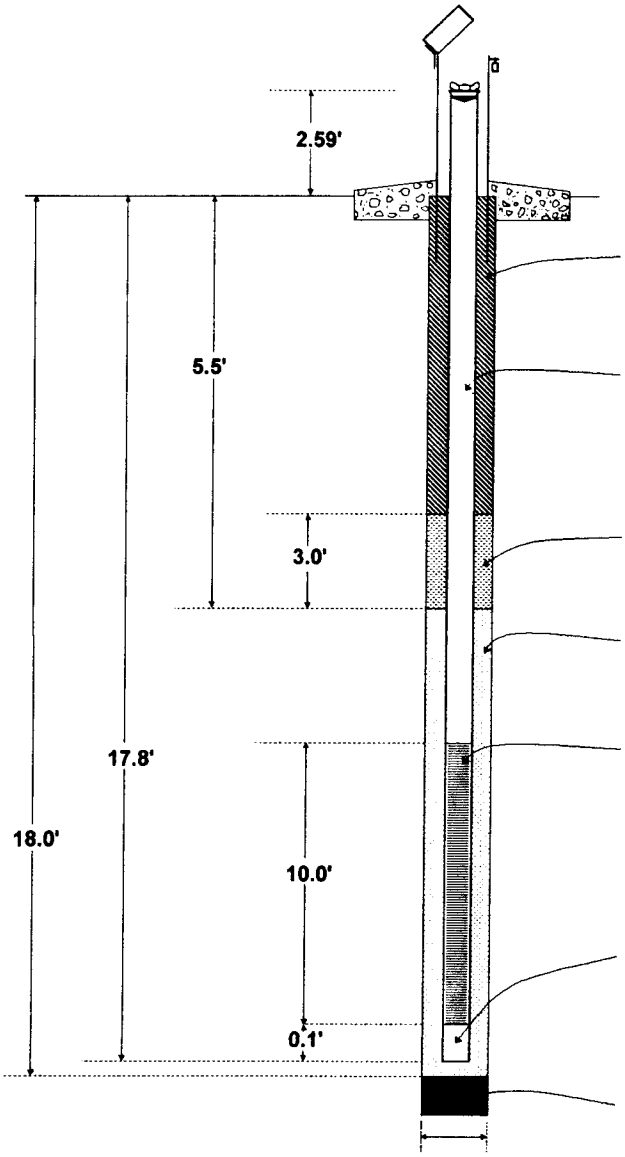

SURFACE PROTECTION

Type: 6" Steel Pipe w/Locking Cover

Top of Riser: 583.19 (ft) (NAVD 88)

Ground Surface: 580.6 (ft) (NAVD 88)

SURFACE SEAL

Type: See Primary Seal

RISER PIPE

Diameter: 2"

Type: 304 flush thread stainless steel

PRIMARY SEAL

Type: Bentonite Chips

FILTER MATERIAL

Type: 10/20 Silica Sand

SCREEN

Diameter: 2"

Type: 304 flush thread stainless steel, wire wrapped

Slot dimensions: 0.010"

SEDIMENT TRAP

Diameter: 2"

Type: 304 flush thread stainless steel

LOWER SEAL

Type: None

BORING DIAMETER

DIAMETER: 15": 0-8', 8": 8'-18'

*Note-Diagram not shown to scale

INSTALLATION METHOD: Boring drilled to completion; set screen & riser pipe; placed filter; water present; not surged; topped off filter; placed bentonite seal; installed protective cover w/concrete pad at surface.

NOTES: Developed by pumping 57 gallons of water.

BLACK & VEATCH

PIEZOMETER LOG

PIEZOMETER NO. P-396S

SHEET 1 OF 1

CLIENT	PROJECT	PROJECT NO.
Detroit Edison	Fermi 3 COL Application	147483

PROJECT LOCATION	COORDINATES	TOP OF RISER ELEVATION (DATUM)	DATE
Monroe, MI	N 8949.8' E 5248.8'	581.22 ft (NAVD 88)	05/24/07

STRATUM MONITORED: Rock Fill, Fat Clay

INSPECTOR	CHECKED BY	APPROVED BY
Duncan	Meyer EM	Meyer EM

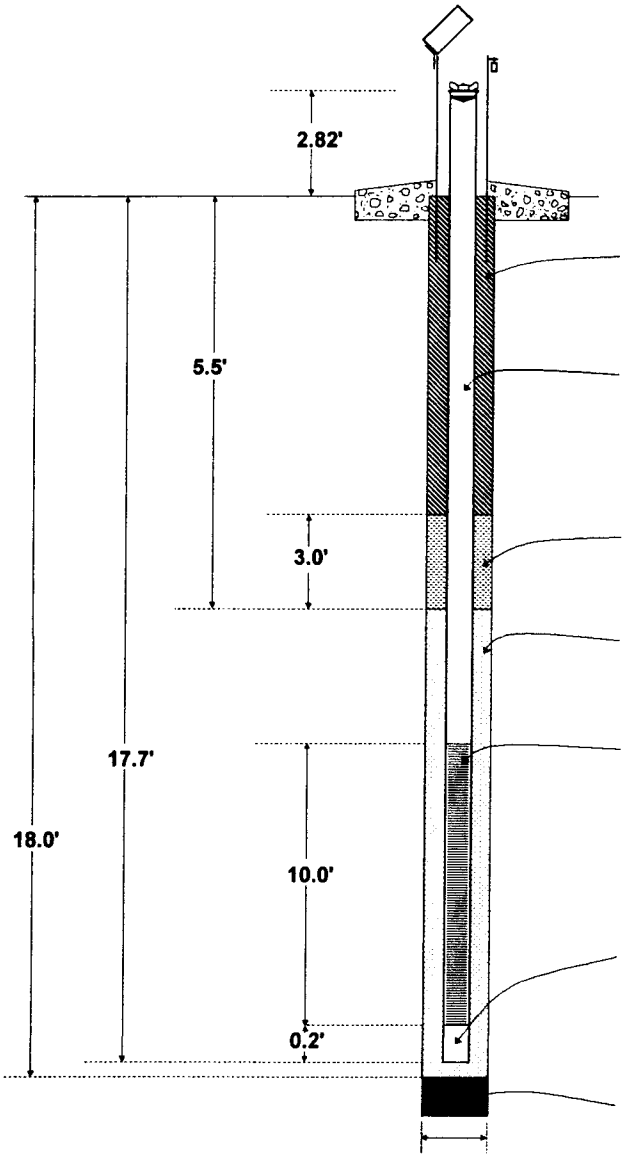

SURFACE PROTECTION

Type: 6" Steel Pipe w/Locking Cover

Top of Riser: 581.22 (ft) (NAVD 88)

Ground Surface: 578.4 (ft) (NAVD 88)

SURFACE SEAL

Type: See Primary Seal

RISER PIPE

Diameter: 2"

Type: Sch 40, NSF certified, flush thread PVC

PRIMARY SEAL

Type: Bentonite Chips

FILTER MATERIAL

Type: 10/20 Silica Sand

SCREEN

Diameter: 2"

Type: Sch 40, NSF certified, flush thread PVC

Slot dimensions: 0.010"

SEDIMENT TRAP

Diameter: 2"

Type: Sch 40, NSF certified, flush thread PVC

LOWER SEAL

Type: Bentonite Chips

BORING DIAMETER

DIAMETER: 8"

*Note-Diagram not shown to scale

INSTALLATION METHOD: Boring drilled to completion; placed lower bentonite seal from 19.5'-18.0'; set screen & riser pipe; placed filter & bentonite seal; installed protective cover w/concrete pad at surface.

NOTES: Developed by pumping 55 gallons of water.

BLACK & VEATCH

PIEZOMETER LOG

PIEZOMETER NO. P-397S

SHEET 1 OF 1

CLIENT	PROJECT	PROJECT NO.
Detroit Edison	Fermi 3 COL Application	147483

PROJECT LOCATION	COORDINATES	TOP OF RISER ELEVATION (DATUM)	DATE
Monroe, MI	N 8901.4' E 5748.5'	578.95 ft (NAVD 88)	05/23/07

STRATUM MONITORED

Fat Clay, Organic Soil, Lean Clay, Sandy Lean Clay

INSPECTOR	CHECKED BY	APPROVED BY
Duncan	Meyer	Meyer

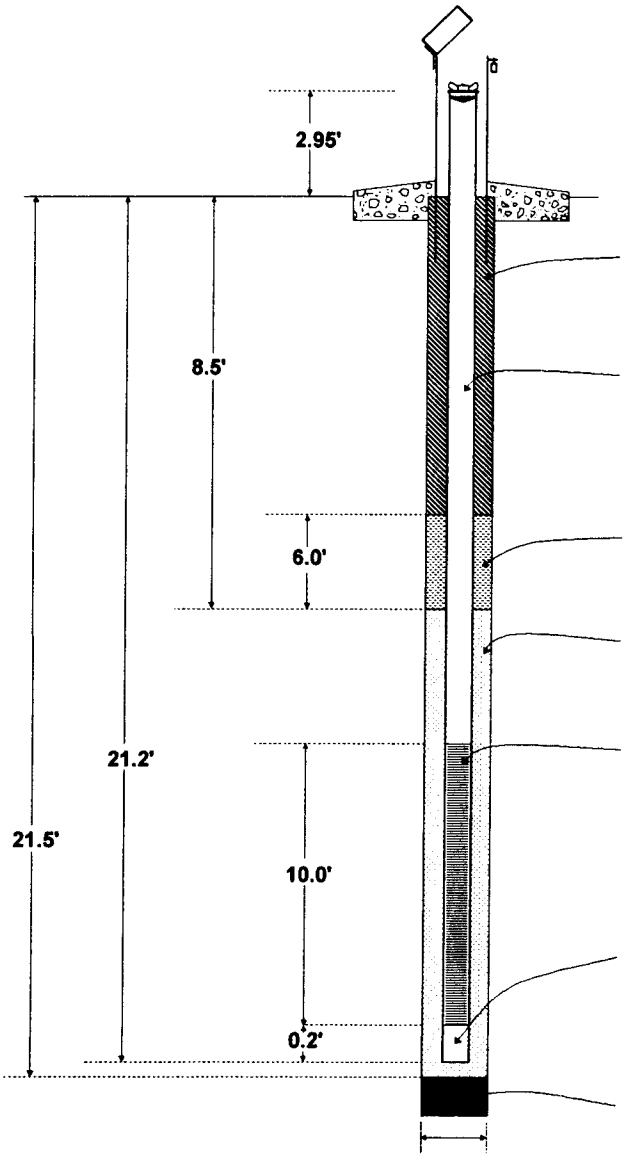

SURFACE PROTECTION

Type: 6" Steel Pipe w/Locking Cover

Top of Riser: 578.95 (ft) (NAVD 88)

Ground Surface: 576.0 (ft) (NAVD 88)

SURFACE SEAL

Type: See Primary Seal

RISER PIPE

Diameter: 2"

Type: Sch 40, NSF certified, flush thread PVC

PRIMARY SEAL

Type: Bentonite Chips

FILTER MATERIAL

Type: 10/20 Silica Sand

SCREEN

Diameter: 2"

Type: Sch 40, NSF certified, flush thread PVC

Slot dimensions: 0.010"

SEDIMENT TRAP

Diameter: 2"

Type: Sch 40, NSF certified, flush thread PVC

LOWER SEAL

Type: None

BORING DIAMETER

DIAMETER: 8"

*Note-Diagram not shown to scale

INSTALLATION METHOD: Boring drilled to completion; set screen & riser pipe; placed filter & bentonite seal; installed protective cover w/concrete pad at surface.

NOTES: Developed by pumping 89 gallons of water over a multiple day period - pumped dry multiple times.

BLACK & VEATCH

PIEZOMETER LOG

PIEZOMETER NO. P-398D
SHEET 1 OF 1

CLIENT	PROJECT	PROJECT NO.
Detroit Edison	Fermi 3 COL Application	147483

PROJECT LOCATION	COORDINATES	TOP OF RISER ELEVATION (DATUM)	DATE
Monroe, MI	N 9510.6' E 5352.1'	580.55 ft (NAVD 88)	06/02/07

STRATUM MONITORED
Salina Group - Unit F: Shale, Dolomite

INSPECTOR	CHECKED BY	APPROVED BY
GCO GWH Ohlmacher/Duncan	Meyer EM	Meyer EM

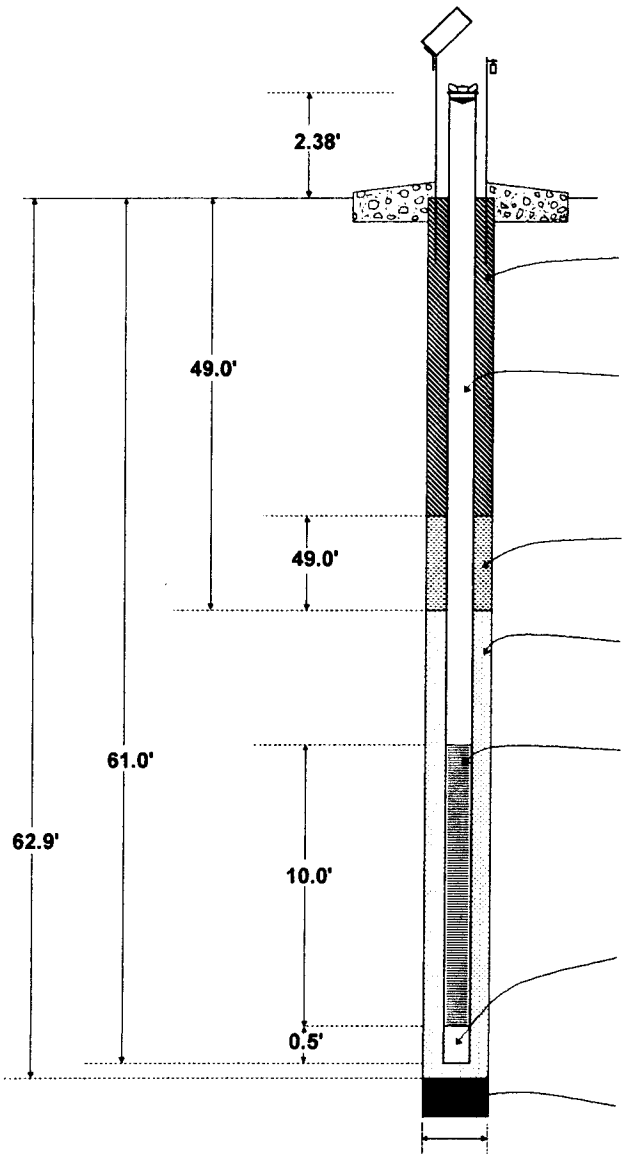

SURFACE PROTECTION
Type: 6" Steel Pipe w/Locking Cover
Top of Riser: 580.55 (ft) (NAVD 88)
Ground Surface: 577.9 (ft) (NAVD 88)

SURFACE SEAL
Type: See Primary Seal

RISER PIPE
Diameter: 2"
Type: Sch 40, NSF certified, flush thread PVC

PRIMARY SEAL
Type: Bentonite Chips

FILTER MATERIAL
Type: 10/20 Silica Sand

SCREEN
Diameter: 2"
Type: Sch 40, NSF certified, flush thread PVC
Slot dimensions: 0.010"

SEDIMENT TRAP
Diameter: 2"
Type: Sch 40, NSF certified, flush thread PVC

LOWER SEAL
Type: Bentonite Chips

BORING DIAMETER
DIAMETER: 6": 0-29.5', 4.8": 29.5'-61'
*Note-Diagram not shown to scale

INSTALLATION METHOD: Boring drilled to completion; placed lower bentonite seal from 101.0'-62.9'; set screen & riser pipe w/stainless steel centralizers; placed filter; surged filter; placed bentonite seal; installed protective cover w/concrete pad at surface.

NOTES: Developed by pumping 100 gallons of water.

BLACK & VEATCH

PIEZOMETER LOG

PIEZOMETER NO. P-398S

SHEET 1 OF 1

CLIENT	PROJECT	PROJECT NO.
Detroit Edison	Fermi 3 COL Application	147483

PROJECT LOCATION	COORDINATES	TOP OF RISER ELEVATION (DATUM)	DATE
Monroe, MI	N 9504.3' E 5350.4'	580.38 ft (NAVD 88)	05/23/07

STRATUM MONITORED: Lean Clay, Organic Soil

INSPECTOR	CHECKED BY	APPROVED BY
Duncan	Meyer EM	Meyer EM

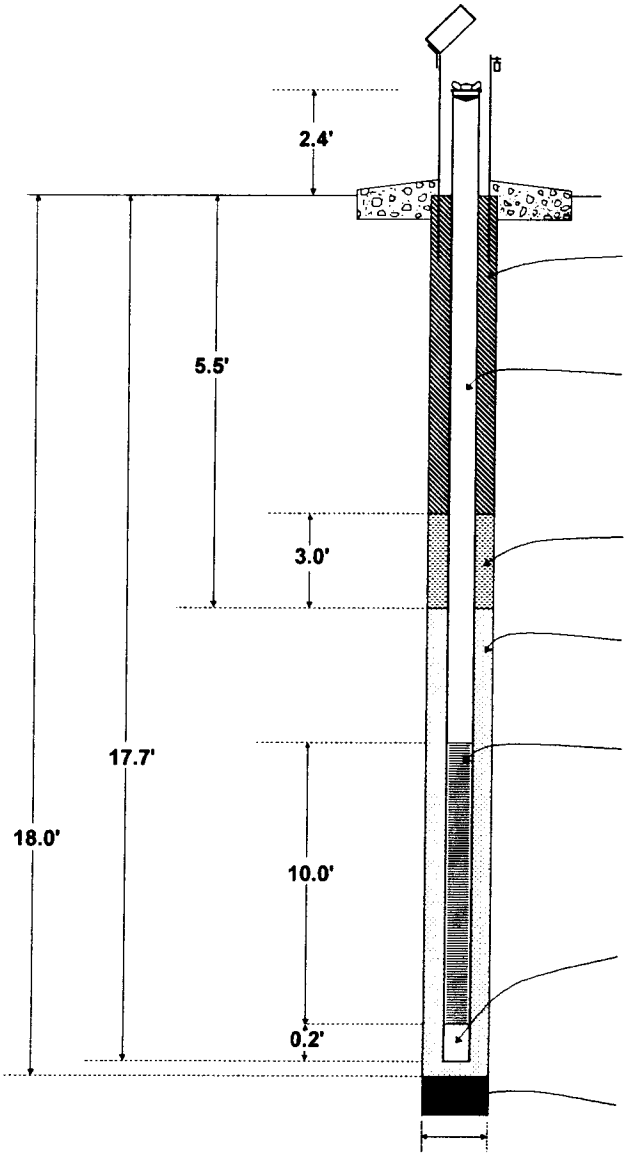

SURFACE PROTECTION

Type: 6" Steel Pipe w/Locking Cover

Top of Riser: 580.38 (ft) (NAVD 88)

Ground Surface: 578.0 (ft) (NAVD 88)

SURFACE SEAL

Type: See Primary Seal

RISER PIPE

Diameter: 2"

Type: Sch 40, NSF certified, flush thread PVC

PRIMARY SEAL

Type: Bentonite Chips

FILTER MATERIAL

Type: 10/20 Silica Sand

SCREEN

Diameter: 2"

Type: Sch 40, NSF certified, flush thread PVC

Slot dimensions: 0.010"

SEDIMENT TRAP

Diameter: 2"

Type: Sch 40, NSF certified, flush thread PVC

LOWER SEAL

Type: None

BORING DIAMETER

DIAMETER: 8"

*Note-Diagram not shown to scale

INSTALLATION METHOD: Boring drilled to completion; set screen & riser pipe; placed filter & bentonite seal; installed protective cover w/concrete pad at surface.

NOTES: Developed by pumping 89 gallons of water over a multiple day period - pumped dry multiple times.

BLACK & VEATCH

PIEZOMETER LOG

PIEZOMETER NO. P-399D
SHEET 1 OF 1

CLIENT	PROJECT	PROJECT NO.
Detroit Edison	Fermi 3 COL Application	147483

PROJECT LOCATION	COORDINATES	TOP OF RISER ELEVATION (DATUM)	DATE
Monroe, MI	N 2565.59' E 5228.73'	577.46 ft (NAVD 88)	05/30/07

STRATUM MONITORED
Bass Isl Gr Dolomite; Salina Gr - Unit F Shale & Dolomite

INSPECTOR	CHECKED BY	APPROVED BY
Ohlmacher GLO	Meyer EM	Meyer EM

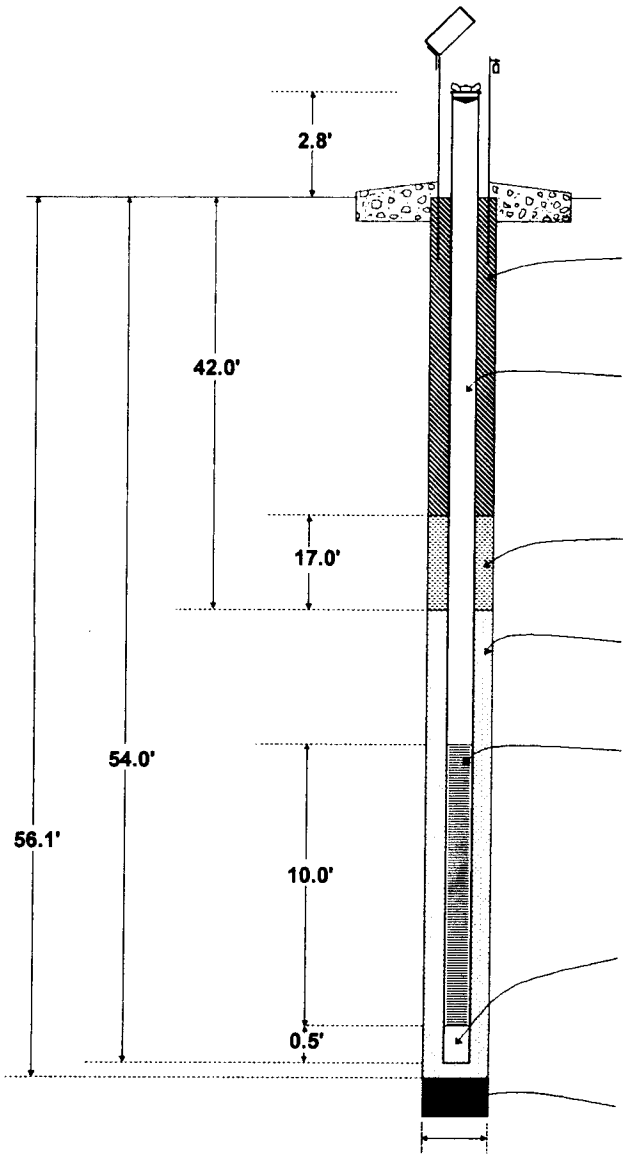

SURFACE PROTECTION
Type: 6" Steel Pipe w/Locking Cover
Top of Riser: 577.46 (ft) (NAVD 88)
Ground Surface: 574.7 (ft) (NAVD 88)

SURFACE SEAL
Type: Cement-Bentonite Grout

RISER PIPE
Diameter: 2"
Type: Sch 40, NSF certified, flush thread PVC

PRIMARY SEAL
Type: Bentonite Chips

FILTER MATERIAL
Type: 10/20 Silica Sand

SCREEN
Diameter: 2"
Type: Sch 40, NSF certified, flush thread PVC
Slot dimensions: 0.010"

SEDIMENT TRAP
Diameter: 2"
Type: Sch 40, NSF certified, flush thread PVC

LOWER SEAL
Type: Bentonite Chips

BORING DIAMETER
DIAMETER: 8": 0-26.8', 4.8": 26.8'-56.1'
*Note-Diagram not shown to scale

INSTALLATION METHOD: Boring drilled to completion; placed lower bentonite seal from 102.0'-56.1'; set screen & riser pipe w/stainless steel centralizers; placed filter; surged filter; placed bentonite seal; placed grout seal; installed protective cover w/concrete pad at surface.

NOTES: Developed by pumping 172 gallons of water.

BLACK & VEATCH

PIEZOMETER LOG

PIEZOMETER NO. CB-C5
SHEET 1 OF 1

CLIENT	PROJECT		PROJECT NO.
Detroit Edison	Fermi 3 COL Application		147483
PROJECT LOCATION	**COORDINATES**	**TOP OF RISER ELEVATION (DATUM)**	**DATE**
Monroe, MI	N 6123.0' E 4663.4'	580.77 ft (NAVD 88)	08/24/07
STRATUM MONITORED			
Bass Islands Group Dolomite & Shale			
INSPECTOR	**CHECKED BY**	**APPROVED BY**	
Grainger EM for	Meyer EM	Meyer EM	

SURFACE PROTECTION

Type: Flush Mount

Top of Riser: 580.77 (ft) (NAVD 88)

Ground Surface: 581.0 (ft) (NAVD 88)

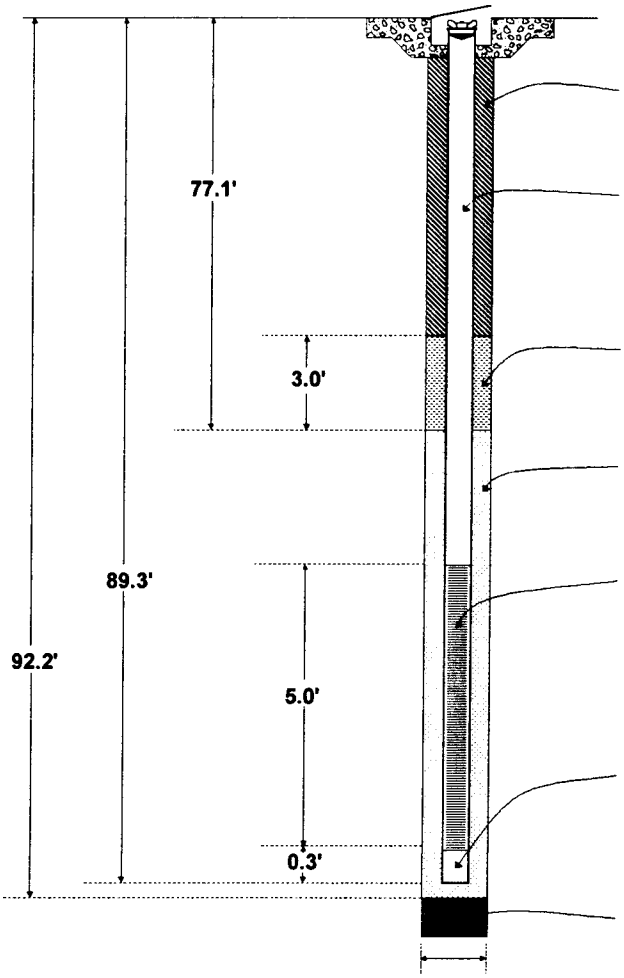

SURFACE SEAL

Type: Bentonite Chips

RISER PIPE

Diameter: 2"

Type: Sch 40, NSF certified, flush thread PVC

PRIMARY SEAL

Type: Bentonite Chips

FILTER MATERIAL

Type: 10/20 Silica Sand

SCREEN

Diameter: 2"

Type: Sch 40, NSF certified, flush thread PVC

Slot dimensions: 0.010"

SEDIMENT TRAP

Diameter: 2"

Type: Sch 40, NSF certified, flush thread PVC

LOWER SEAL

Type: Bentonite Chips

BORING DIAMETER

DIAMETER: 6": 0-30.7', 4.8": 30.7'-92.2'

*Note-Diagram not shown to scale

INSTALLATION METHOD: Boring drilled to completion; placed lower bentonite seal from 131.0'-92.2'; set screen & riser pipe w/stainless steel centralizers; placed filter; surged filter; placed bentonite seal; installed protective cover w/concrete pad at surface.

NOTES:

BLACK & VEATCH

PIEZOMETER LOG

PIEZOMETER NO. EB/TSC-C2

SHEET 1 OF 1

CLIENT	PROJECT	PROJECT NO.
Detroit Edison	Fermi 3 COL Application	147483

PROJECT LOCATION	COORDINATES	TOP OF RISER ELEVATION (DATUM)	DATE
Monroe, MI	N 6579.3' E 4697.2'	581.12 ft (NAVD 88)	09/11/07

STRATUM MONITORED
Bass Islands Group Dolomite

INSPECTOR	CHECKED BY	APPROVED BY
Grainger SMG for	Meyer EM	Meyer EM

SURFACE PROTECTION

Type: Flush Mount

Top of Riser: 581.12 (ft) (NAVD 88)

Ground Surface: 581.4 (ft) (NAVD 88)

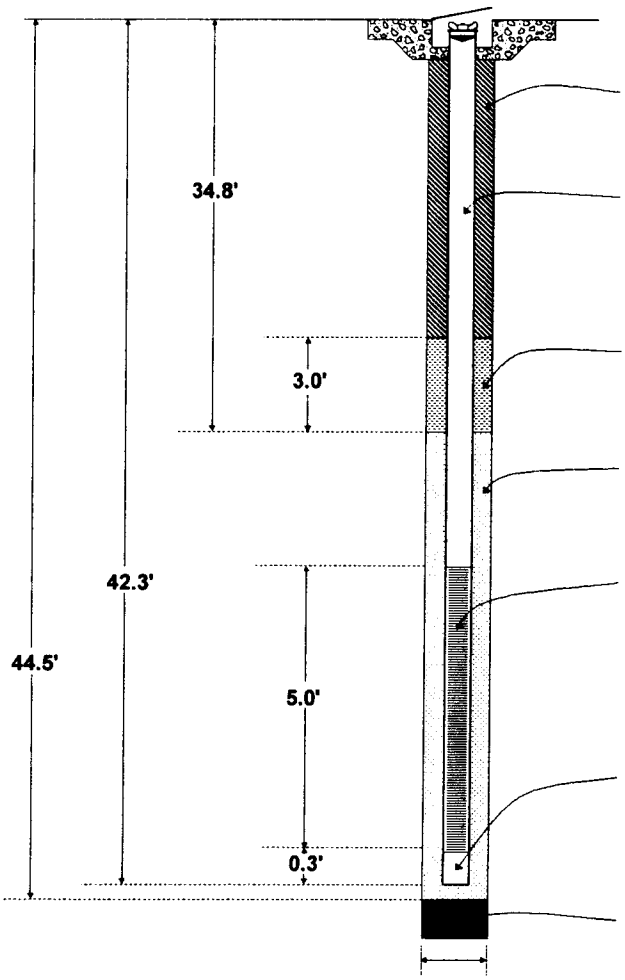

SURFACE SEAL

Type: Bentonite Chips

RISER PIPE

Diameter: 2"

Type: Sch 40, NSF certified, flush thread PVC

PRIMARY SEAL

Type: Bentonite Chips

FILTER MATERIAL

Type: 10/20 Silica Sand

SCREEN

Diameter: 2"

Type: Sch 40, NSF certified, flush thread PVC

Slot dimensions: 0.010"

SEDIMENT TRAP

Diameter: 2"

Type: Sch 40, NSF certified, flush thread PVC

LOWER SEAL

Type: Bentonite Chips

BORING DIAMETER

DIAMETER: 6": 0-30.5', 4.8": 30.5'-44.5'

*Note-Diagram not shown to scale

INSTALLATION METHOD: Boring drilled to completion; placed lower bentonite seal from 50.5'-44.5'; set screen & riser pipe; placed filter; surged filter; topped off filter; placed bentonite seal; installed protective cover w/concrete pad at surface.

NOTES:

BLACK & VEATCH

TEST PIT LOG

TEST-PIT NO. TP-1

SHEET 1 OF 1

CLIENT - PROJECT			PROJECT NO.
Detroit Edison - Fermi 3 COL Application			147483
PROJECT LOCATION	**COORDINATES**	**GROUND ELEVATION (DATUM)**	**DATE**
Monroe, MI	N 6200' E 4780'	581.4 ft (88)	08/25/07
SURFACE CONDITIONS	Paved Parking Area		
EXCAVATION METHOD	Backhoe		
INSPECTOR	**CHECKED BY**	**APPROVED BY**	
Grainger GCG for	Meyer EM	Meyer EM	

PLAN VIEW SKETCH, DIMENSIONS, AND NORTH ARROW

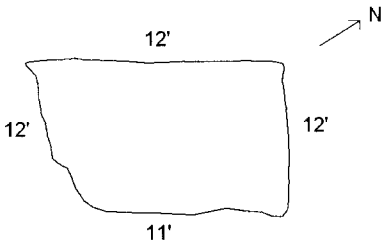

PROFILE VIEW SKETCH AND DIMENSIONS

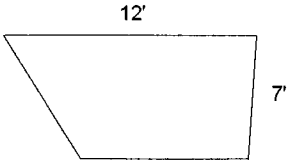

CLASSIFICATION AND DESCRIPTION OF MATERIAL (HORIZONTAL SCALE IN FEET)

SAMPLE NUMBER & TYPE | DEPTH (FEET)

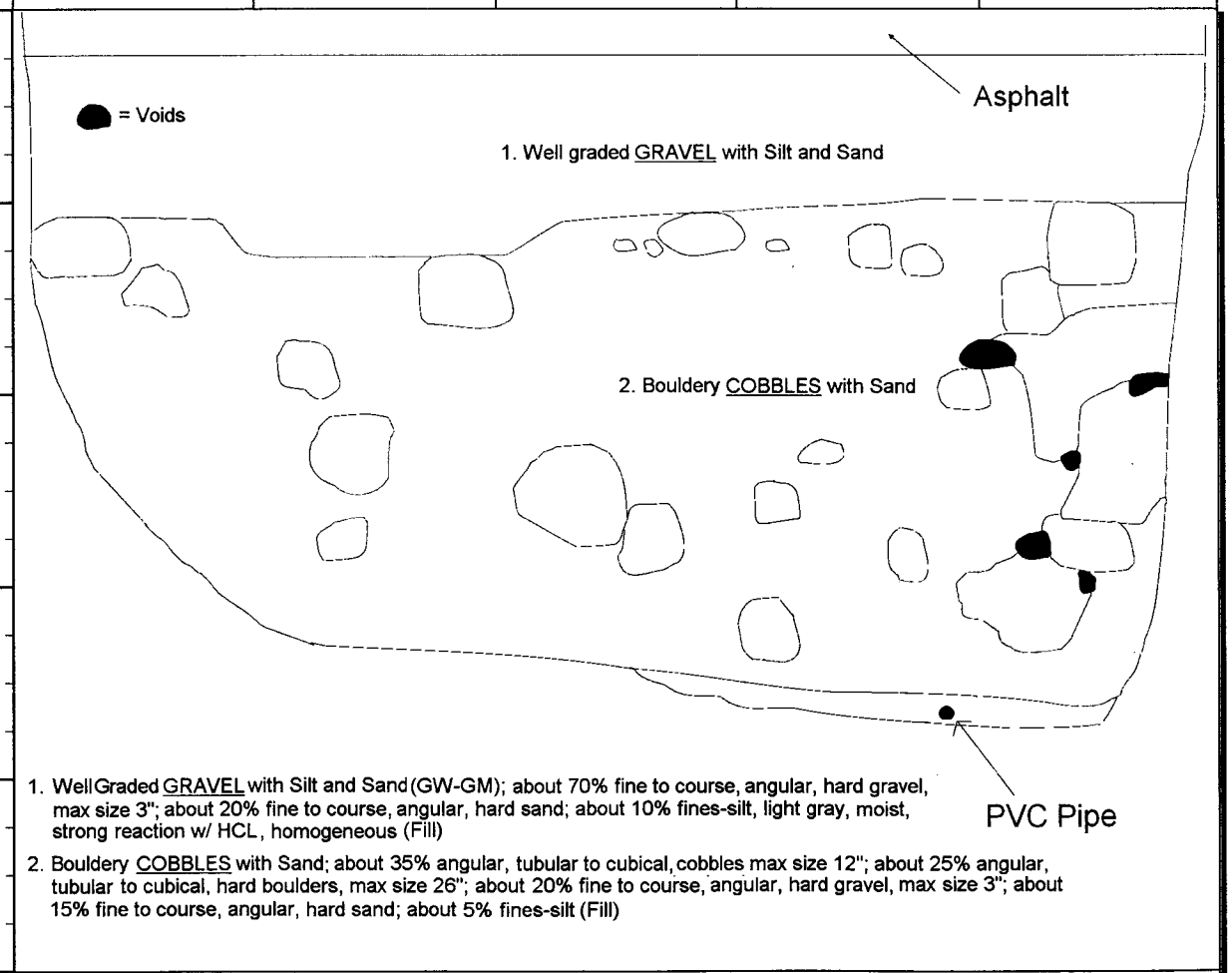

1. Well Graded GRAVEL with Silt and Sand (GW-GM); about 70% fine to course, angular, hard gravel, max size 3"; about 20% fine to course, angular, hard sand; about 10% fines-silt, light gray, moist, strong reaction w/ HCL, homogeneous (Fill)
2. Bouldery COBBLES with Sand; about 35% angular, tubular to cubical, cobbles max size 12"; about 25% angular, tubular to cubical, hard boulders, max size 26"; about 20% fine to course, angular, hard gravel, max size 3"; about 15% fine to course, angular, hard sand; about 5% fines-silt (Fill)

REMARKS

Backfilled with excavated material.

5/28/2008 2:55 PM DTE - Fermi 3 Geotech