Enclosure 1:

"Nuclear Analysis Codes and Methods Topical Report," PM-1015-18594-NP, Revision 0, nonproprietary version

NuScale Power, LLC
1100 NE Circle Blvd., Suite 200 Corvallis, Oregon 97330 Office 541.360-0500 Fax 541.207.3928
www.nuscalepower.com

Nuclear Analysis Codes and Methods Topical Report

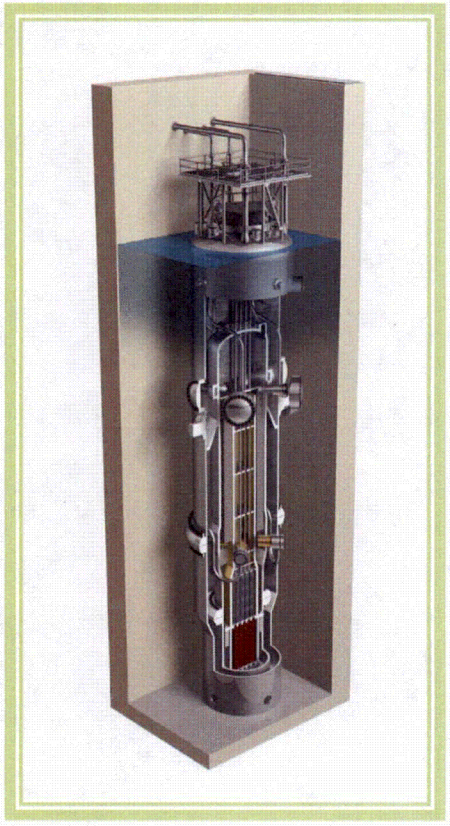

Stephanie Seely
NuScale Licensing Engineer

Chris Kirby
ANATECH Consultant

November 12, 2015

PM-1015-18594-NP
Revision: 0

Copyright 2015 by NuScale Power, LLC.

NuScale Power™

Acknowledgement and Disclaimer

This material is based upon work supported by the Department of Energy under Award Number DE-NE0000633.

This presentation was prepared as an account of work sponsored by an agency of the United States Government. Neither the United States Government nor any agency thereof, nor any of their employees, makes any warranty, express or implied, or assumes any legal liability or responsibility for the accuracy, completeness, or usefulness of any information, apparatus, product, or process disclosed, or represents that its use would not infringe privately owned rights. Reference herein to any specific commercial product, process, or service by trade name, trademark, manufacturer, or otherwise does not necessarily constitute or imply its endorsement, recommendation, or favoring by the United States Government or any agency thereof. The views and opinions of authors expressed herein do not necessarily state or reflect those of the United States Government or any agency thereof.

Copyright 2015 by NuScale Power, LLC.

Outline

- Topical report overview
- Core management system (CMS) methods
- CMS benchmarking strategy
- Core design
- Inputs to safety analysis
- Summary
- Next steps

Copyright 2015 by NuScale Power, LLC.

Background

- Previous version of CMS was approved via SOA-95
- The CMS safety evaluation report requires each organization using these codes to submit separate documentation of
  - how the codes will be used
  - justification of modeling assumptions
  - design specific data
- NuScale seeks the U.S. NRC's approval to use CMS codes with the Nuclear Analysis Codes and Methods Topical Report for the analysis of the NuScale reactor

Copyright 2015 by NuScale Power, LLC.

Background

- Extensive Licensing history
  - NRC letter to Nuclear Management Company LLC, September 13, 2000, SUBJECT: PRAIRIE ISLAND NUCLEAR GENERATING PLANT, UNTS 1 AND 2 – SAFETY EVALUATION ON TAPICAL REPORT, NSPNAD-8101, REVISION 2, "QUALIFIACTION OF REACTOR PHYSICS METHODS FOR APPLICATION PRAIRIE ISLAND UNITS 1 AND 2" (TAC NOS. MA7997 AND MA7998)
  - NRC letter to Omaha Public Power District, March 11, 2005, SUBJECT: FORT CALHOUN STATION, UNIT 1 – ISSUANCE OF AMENDMENT (TAC NO. MC4304)
  - NRC letter to Virginia Electric and Power Company, March 12, 2003, SUBJECT VIRGINIA ELECTRIC AND POWER COMPANY – ACCEPTANCE OF TOPICAL REPORT DOM-NAF-1, "QUALIFICATION OF THE STUDSVIK CORE MANAGEMENT SYSTEM REACTOR PHYSICS METHODS FOR APPLICATION TO NORTH ANNA AND SURRY POWER STATIONS" (TAC NOW. MB5434, MB 5436, AND MB5437)
  - NRC letter to Duke Energy Corporation, August 20, 2004, SUBJECT: FINAL SAFETY EVALUATION FOR DUKE TOPICAL REPORT DPC-NE-1005P, "NUCLEAR DESIGN METHODOLOGY USING CASMO-4/SIMULATE-3 MOX"
  - NRC letter to Southern California Edison Company, December 15, 2009, SUBJECT: SAN ONOFRE NUCLEAR GENERATING STATION, UNITS 2 AND 3 – ISSUANCE OF AMENDMENTS REVISING TECHNICAL SPECIFICATION 5.7.1.5, "CORE OPERATING LIMITS REPORT (COLR)" (TAC NOS. ME0604 AND ME0605)
  - NRC letter to Arizona Public , March 20, 2001, SUBJECT: PALO VERDE NUCLEAR GENERATING STATION, UNITS 1, 2, AND 3 – ISSUANCE OF AMENDMENTS ON CASMO-4/SIMULATE-3" (TAC NOS. MA9279 , MA9280, AND MA9281)
  - NRC letter to Duke Energy Corporation, December 18, 2002, "SUBJECT: CATAWBA NUCLEAR STATION, UNITS 1 AND 2 AND MCGUIRE NUCLEAR STATION, UNITS 1 AND 2 RE: ACCEPTANCE FOR REFERENCING OF THE MODIFIED LICEINSING TOPICAL REPORT, DPC-NE-2009P, REVISION 2 (TACS NOS. MB4502, MB4503, MB4504, AND MB4505)

Copyright 2015 by NuScale Power, LLC.

Introduction

- The NuScale core design utilizes the Studsvik CMS code suite
- Demonstrate the applicability of the CMS suite to the NuScale design
- Review of the core design and inputs to safety analysis

Copyright 2015 by NuScale Power, LLC.

Previous Interactions

- Codes and Methods meetings
  - June 2010
  - October 2011
  - February 2014
- Utilized CMS codes since 2008 for NuScale design

Copyright 2015 by NuScale Power, LLC.

Topical Scope

Part 1

- Nuclear analysis codes
- Underlying methodology
- Code application for NuScale
- How code qualification is performed
- How code bias and bias uncertainty is determined

Part 2

- Code qualification and benchmarking
- Code bias and bias uncertainty determination

Copyright 2015 by NuScale Power, LLC.

CMS Methodology

Chris Kirby

Copyright 2015 by NuScale Power, LLC.

CMS Code Methodology

- Purpose: provide general description and functionality of the NuScale nuclear design and analysis codes
- Studsvik Scandpower CMS Code Suite
  - CASMO5 (lattice physics)
  - CMSLINK5 (data processing)
  - SIMULATE5 (core simulator)
  - SIMULATE-3K (3-D transient)
- NuScale will use the codes for
  - nuclear design and analysis
  - physics input to safety analysis
  - operations / reactor engineering support
  - core follow
  - startup physics testing

Copyright 2015 by NuScale Power, LLC.

CMS Program Flow Chart

{{

}}2(a),(c)

Copyright 2015 by NuScale Power, LLC.

NuScale Power™

CASMO5 Introduction

- Multigroup, 2-D transport theory code
  - generates lattice physics parameters for LWRs
    - cross-sections, nuclide concentrations, pin power distributions, discontinuity factors – for use in SIMULATE5

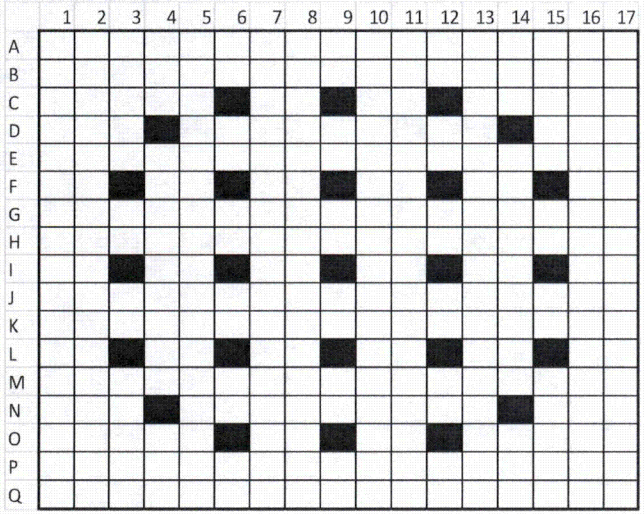

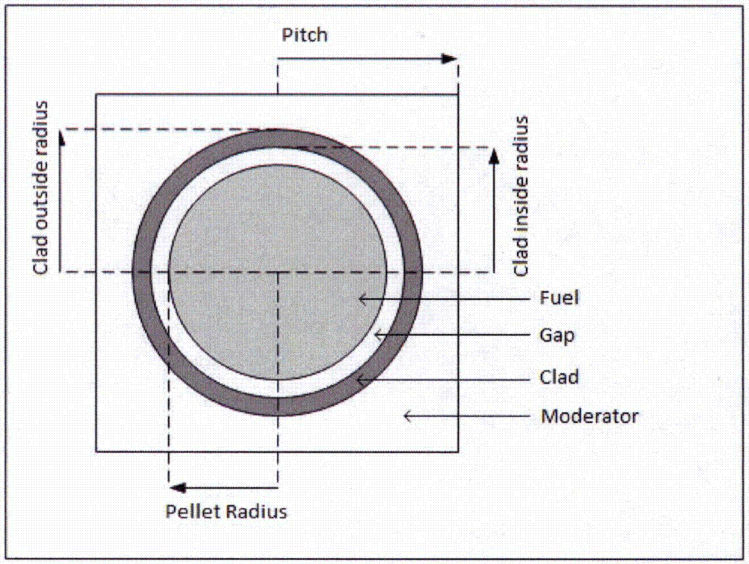

Copyright 2015 by NuScale Power, LLC.
NuScale Power™

CASMO5 Enhancements

- Neutron data library comparison
  - enhanced resonance treatment, improved accuracy

{{

}}2(a),(c)

- Enhanced scattering kernel for improved Doppler coefficient predictions
- Improved Gd depletion model
- Improved energy release model

Copyright 2015 by NuScale Power, LLC.

CASMO5 Calculation Flow

{{

}}2(a),(c)

Copyright 2015 by NuScale Power, LLC.

NuScale Power™

CASMO5 Case Matrix

{{

}}2(a),(c)

Copyright 2015 by NuScale Power, LLC.

NuScale Power™

CASMO5 Model Development

- CASMO5 generates cross-sections based on the radial geometry and material properties of the fuel

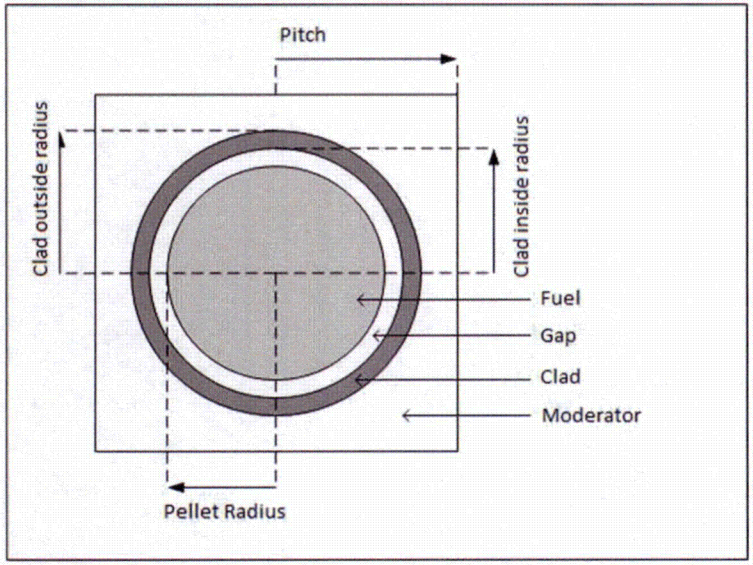

Height (cm)	Fuel Pin Composition (without BP)
8	Reduced Enrichment Blanket
184	Fully Ennriched Zone UO2
8	Reduced Enrichment Blanket

Height (cm)	Fuel Pin Composition (with BP)
8	Reduced Enrichment Blanket
8	UO2 Fully Ennriched Cutback (no Gd2O3)
176	BP Rod (UO2-Gd2O3) Reduced UO2 Enrichment
8	Reduced Enrichment Blanket

- Cross-sections needed for each unique enrichment zone and reflectors

Copyright 2015 by NuScale Power, LLC.
NuScale Power™

CMSLINK5 Introduction

- CMS data processing code
  - reads CASMO5 card image files

{{

}}2(a),(c)

  - evaluates all statepoint cases available from CASMO5
  - creates single or multi-dimensional table sets representing available data
    - case matrix provides all data necessary for CMSLINK5 to functionalize neutronic parameters versus statepoint parameters
  - creates binary data library that can be read by SIMULATE5 and other CMS codes

Copyright 2015 by NuScale Power, LLC.

SIMULATE5 Introduction

- SIMULATE5 is a 3-D steady-state, multi-group, nodal diffusion theory, reactor simulator code
  - attempt to model 'real' physics (no ad hoc models)
- Enhancements compared to SIMULATE3
  - multi-group formulation compared to two energy groups
  - hybrid macroscopic/microscopic depletion model with over 55 nuclides compared to a macroscopic model with 4 isotopes modeled
  - explicit modeling of every material interface, spacer grids, and control rod interfaces compared to uniform axial nodalization model
  - 5x5 or 9x9 submesh assembly modeling compared to 1 or 4 nodes per assembly
  - improved pin power reconstruction model
  - improved T-H model. From lower tie plate to upper tie plate with voiding allowed, compared to simple heat balance with no voiding.
  - explicit isotope tracking model for shutdown cooling compared to lumped model
  - explicit treatment of spacer grids and control rods. Flux weighted cross-sections.

Copyright 2015 by NuScale Power, LLC.

SIMULATE5 Calculation Flow

{{

}}2(a),(c)

Copyright 2015 by NuScale Power, LLC.

NuScale Power™

SIMULATE5 Model Development

- Core model is defined by placement and axial composition of the fuel assemblies, control rods, spacer grids, and radial reflector

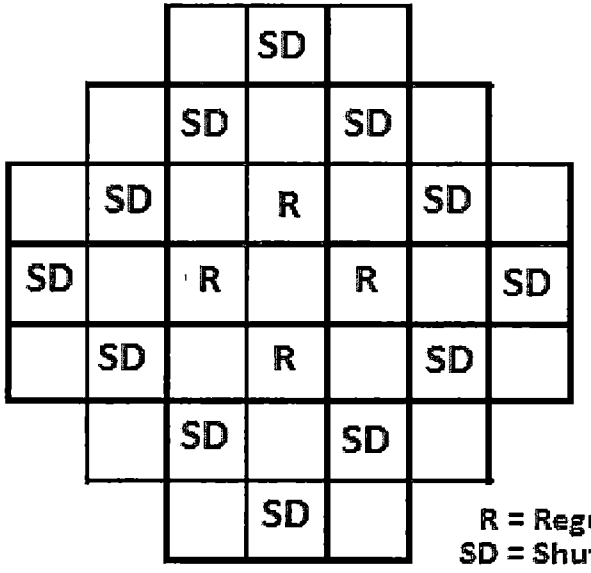

Height (cm)	Fuel Pin Composition (without BP)
8	Reduced Enrichment Blanket
184	Fully Ennriched Zone UO2
8	Reduced Enrichment Blanket

Height (cm)	Fuel Pin Composition (with BP)
8	Reduced Enrichment Blanket
8	UO2 Fully Ennriched Cutback (no Gd2O3)
176	BP Rod (UO2-Gd2O3) Reduced UO2 Enrichment
8	Reduced Enrichment Blanket

- Cross-sections are assigned axially, per node, for each assembly type and also to the radial reflector

Copyright 2015 by NuScale Power, LLC.
NuScale Power™

SIMULATE-3K Introduction

- S3K is a 3-D transient version of SIMULATE3 {{
  - used to analyze core transients
    - NuScale control rod ejection accident
  - coupled two-group nodal model to detailed fuel pin and channel hydraulic model

}}2(a),(c)

Copyright 2015 by NuScale Power, LLC.

NUSCALE POWER™

SIMULATE-3K Model Development

- Input SIMULATE5 restart file
  - establishes core model for analysis
- Input core configuration
  - power level, control rod positions, temperature, etc.
- Model transient
  - rod ejection
    - control rod movements (transient time scale, time steps, ejection time, reactor trip function, delay time, SCRAM time)
- Output
  - power, reactivity, axial offset, power peaking, maximum fuel temperature, max fuel enthalpy
  - EFP files (direct access data file of pin-by-pin results)
    - exposure, power, fuel enthalpy, centerline temperature, surface temperature

Copyright 2015 by NuScale Power, LLC.

CMS Code Benchmarking

- CMS benchmarking is designed to
  - demonstrate the general adequacy of the CMS code in core physics applications relevant to the NuScale design
  - determine bias and bias uncertainty values for various core physics parameters applicable to the NuScale design
- CMS benchmarking is achieved by
  - CMS comparisons to empirical data for systems that have characteristics relevant to the NuScale design application. The empirical data is used to demonstrate general adequacy of the code system for the range of physics applications intended.
  - CMS comparisons to a higher order code used for bias and bias uncertainty determinations specific to NuScale design

Copyright 2015 by NuScale Power, LLC.

CMS Code Benchmarking

- CMS empirical data benchmark selection
  - bounding/representative of NuScale reactor parameters (e.g., fuel type, enrichment, geometry, moderation, etc.)
  - involves basic parameters of specific interest to NuScale
- CMS empirical data benchmarking comparisons encompass
  - critical experiment data
  - experimental reactor data
  - commercial reactor critical data

Copyright 2015 by NuScale Power, LLC.

CMS Code Benchmarking

- Critical experiments
  - used to show CMS ability to accurately predict k_{eff}
  - taken from the Handbook of Evaluated Criticality Safety Benchmark Experiments
  - all evaluated experiments include low enriched uranium with enrichments in the range of those expected in NuScale design

Copyright 2015 by NuScale Power, LLC.

CMS Code Benchmarking

{{

}}2(a),(c)

Copyright 2015 by NuScale Power, LLC.

NuScale Power™

CMS Code Benchmarking

{{

}}2(a),(c)

Copyright 2015 by NuScale Power, LLC.

CMS Code Benchmarking

{{

}}2(a),(c)

Copyright 2015 by NuScale Power, LLC.

NuScale Power™

CMS Code Benchmarking

{{

}}2(a),(c)

Copyright 2015 by NuScale Power, LLC.

CMS Code Benchmarking

- Code-to-code comparisons used for bias and bias uncertainty determinations specific to NuScale design
  - k_{eff}, peaking factors, power distribution, critical boron concentration, reactivity coefficients
  - data from code-to-code comparisons will consist of tens to hundreds of data points for each parameter being examined
  - each data set is examined using standard statistical techniques to determine the bias and uncertainty for each parameter

Copyright 2015 by NuScale Power, LLC.

CMS Code Benchmarking

{{

}}2(a),(c)

Copyright 2015 by NuScale Power, LLC.

NuScale Power™

CMS Application to NuScale Core

- CMS code suite will be used for
  - core design
  - safety analysis input
  - startup predictions
  - operations / reactor engineering support
  - core follow

Copyright 2015 by NuScale Power, LLC.

Core Design: Core Configuration

{{

}}2(a),(c)

Copyright 2015 by NuScale Power, LLC.

NuScale Power™

Core Design: Basic Plant Parameters

Reactor Core Description		
▪ Thermal power rating	{{	
▪ Nominal operating pressure		
▪ Nominal inlet temperature		
▪ Number of assemblies		
▪ Assembly pitch		
▪ Refueling interval		
Fuel Assembly Description		
▪ Lattice geometry		
▪ Enrichment		
▪ Fuel Rods per Assembly		
▪ Guide/Instr. Tubes per Assembly		
▪ Control Rod Material		
Fuel Rod Description		
▪ Active core height		
▪ Burnable poison		
▪ Clad material		
▪ Fuel Pellet OD		
▪ Clad ID		
▪ Clad OD		}}2(a),(c)

Copyright 2015 by NuScale Power, LLC.

NuScale Power™

Core Design Constraints

{{

}}2(a),(c)

Copyright 2015 by NuScale Power, LLC.

NUSCALE POWER™

Core Design Process

- Core design is an iterative process
- CASMO5
  - generate cross-sections for each unique fuel enrichment zone and reflectors
- CMSLINK5
  - generates cross-section library
- SIMULATE5
  - core simulator – calculates core physics parameters to compare against design constraints
  - iterate on control variables if design constraints are not met

Copyright 2015 by NuScale Power, LLC.

Core Design Strategy

- Core loading pattern designs

{{

}}2(a),(c)

- Control variables (CMS input)
  - new fuel enrichment, choice of reloaded fuel assemblies, placement of new and reloaded fuel assemblies, orientation of reloaded fuel assemblies, assembly enrichment zoning, BP loading
- State variables (CMS output)
  - power distribution and peaking, critical boron concentration, burnup, rod worth, reactivity coefficients

Copyright 2015 by NuScale Power, LLC.

Core Design Results

- Sample NuScale results from SIMULATE5

{{

}}2(a),(c)

Copyright 2015 by NuScale Power, LLC.

NuScale Power™

Input to Safety Analysis

- Parameters used for safety analysis
  - core reactivity
  - power distributions
    - assembly and fuel rod power peaking (radial, 3-D)
    - axial offset
  - reactivity coefficients
  - kinetics parameters
  - control rod worth
  - critical boron concentration and boron worth
- Biases and uncertainties are applied to calculated parameters to ensure conservative application in safety analyses
  - best estimate predicted value = SIMUALTE5 calculated value + bias
  - uncertainty interval = best estimate ± uncertainty …(absolute)
  - uncertainty interval = best estimate ± (best estimate x uncertainty) …(relative)
    - uncertainty is applied in a conservative direction and dependent on the parameter, and transient scenario

Copyright 2015 by NuScale Power, LLC.

Sample Calculation Parameters

Key Parameter	Events	Conservative Direction
Power Distribution	Dropped CRA or Dropped CRA Bank	Maximum change - Fdh
	Statically Misaligned Control Rod Assembly	Maximum change - Fdh
	Single CRA Withdrawal	Maximum change - Fdh
	Control Rod Ejection	Maximum total peak - Fq
MTC	Uncontrolled CRA Bank Withdrawal at Power	Bounding BOC and EOC conditions
	Uncontrolled CRA Withdrawal at Subcritical or Low Power	Most positive
	Dropped CRA or Dropped CRA Bank	Bounding BOC and EOC conditions
	Statically Misaligned Control Rod Assembly	Bounding BOC and EOC conditions
	Control Rod Ejection	Most positive
	Single CRA Withdrawal	Most positive
DTC	Uncontrolled CRA Bank Withdrawal at Power	Bounding BOC and EOC conditions
	Uncontrolled CRA Withdrawal at Subcritical or Low Power	Most positive
	Dropped CRA or Dropped CRA Bank	Bounding BOC and EOC conditions
	Control Rod Ejection	Most positive
	Single CRA Withdrawal	Most positive
	Statically Misaligned Control Rod Assembly	Bounding BOC and EOC conditions
Reactivity Insertion Rate	Uncontrolled CRA Bank Withdrawal at Power	Minimum to maximum
	Uncontrolled CRA Withdrawal at Subcritical or Low Power	Maximum
Rod Worth	Dropped CRA or Dropped CRA Bank	Maximum - dropped rod
	Statically Misaligned Control Rod Assembly	Maximum - stuck rod
	Inadvertaent Decrease in Boron Concentration in RCS	Maximum - stuck rod
	Control Rod Ejection	Maximum - ejected rod
	Single CRA Withdrawal	Maximum - single CRA
Critical Boron Concentration	Inadvertaent Decrease in Boron Concentration in RCS	Maximum
Initial Boron Concentration	Inadvertaent Decrease in Boron Concentration in RCS	Closest to CBC
Delayed Neutron Fraction	Control Rod Ejection	Minimum
Neutron Lifetime	Control Rod Ejection	Minimum

Copyright 2015 by NuScale Power, LLC.

SIMULATE5 Calculations

- SIMULATE5 cycle depletion calculation is performed at nominal operating conditions with ARO, equilibrium xenon, and critical boron search active
  - results include radial and axial flux and power distributions, boron letdown curve, axial offset, assembly exposures, peaking factors
  - SIMULATE5 'restart' file generated at each depletion step
    - provides core configuration, operating data, and burnup data
    - branch calculations for safety analysis parameters can be performed from the base depletion
      - » examples: rod withdrawal, rod drop, etc.
      - » conservative configuration dependent on parameter desired and accident scenario analyzed

Copyright 2015 by NuScale Power, LLC.

Control Rod Ejection

{{

}}2(a),(c)

Copyright 2015 by NuScale Power, LLC.

NuScale Power™

Startup Physics Testing

- Physics parameters are generated for the following startup testing sequences
  - control rod testing
  - low power physics testing
  - at-power physics testing
- Key physics parameters
  - isothermal temperature coefficients
  - control rod worths
  - assembly and rod power distributions
  - assembly and rod power peaking
  - axial offset

Copyright 2015 by NuScale Power, LLC.

Core Follow

- Physics parameters are generated for core follow to ensure acceptable core performance and detect anomalies during the entire cycle of operation
- Key physics parameter predictions
  - assembly and rod power distributions
  - assembly and rod power peaking
  - axial offset
  - core tilt
  - assembly burnup

Copyright 2015 by NuScale Power, LLC.

Summary

- NuScale plans on using the CMS code suite for nuclear design and analysis
- CMS benchmarked to critical experiments, experimental reactors, commercial reactors, and code-to-code comparisons
- Determination of biases and uncertainties will be included in topical report submittal in May 2016

Copyright 2015 by NuScale Power, LLC.

Submittal Schedule

- Submit part 1 of topical January 2016
- Submit part 2 of topical May 2016

Copyright 2015 by NuScale Power, LLC.

NuScale Power™

6650 SW Redwood Lane, Suite 210
Portland, OR 97224
503.715.2222

1100 NE Circle Blvd., Suite 200
Corvallis, OR 97330
541.360.0500

11333 Woodglen Ave., Suite 205
Rockville, MD 20852
301.770.0472

6060 Piedmont Row Drive South, Suite 600
Charlotte, NC 28287
704.526.3413

http://www.nuscalepower.com

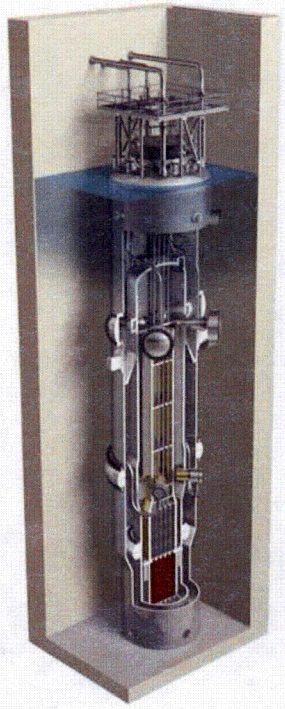

Copyright 2015 by NuScale Power, LLC.