Figures 3.2.1 through 3.2-14

Deleted

FIGURE 3.3-1

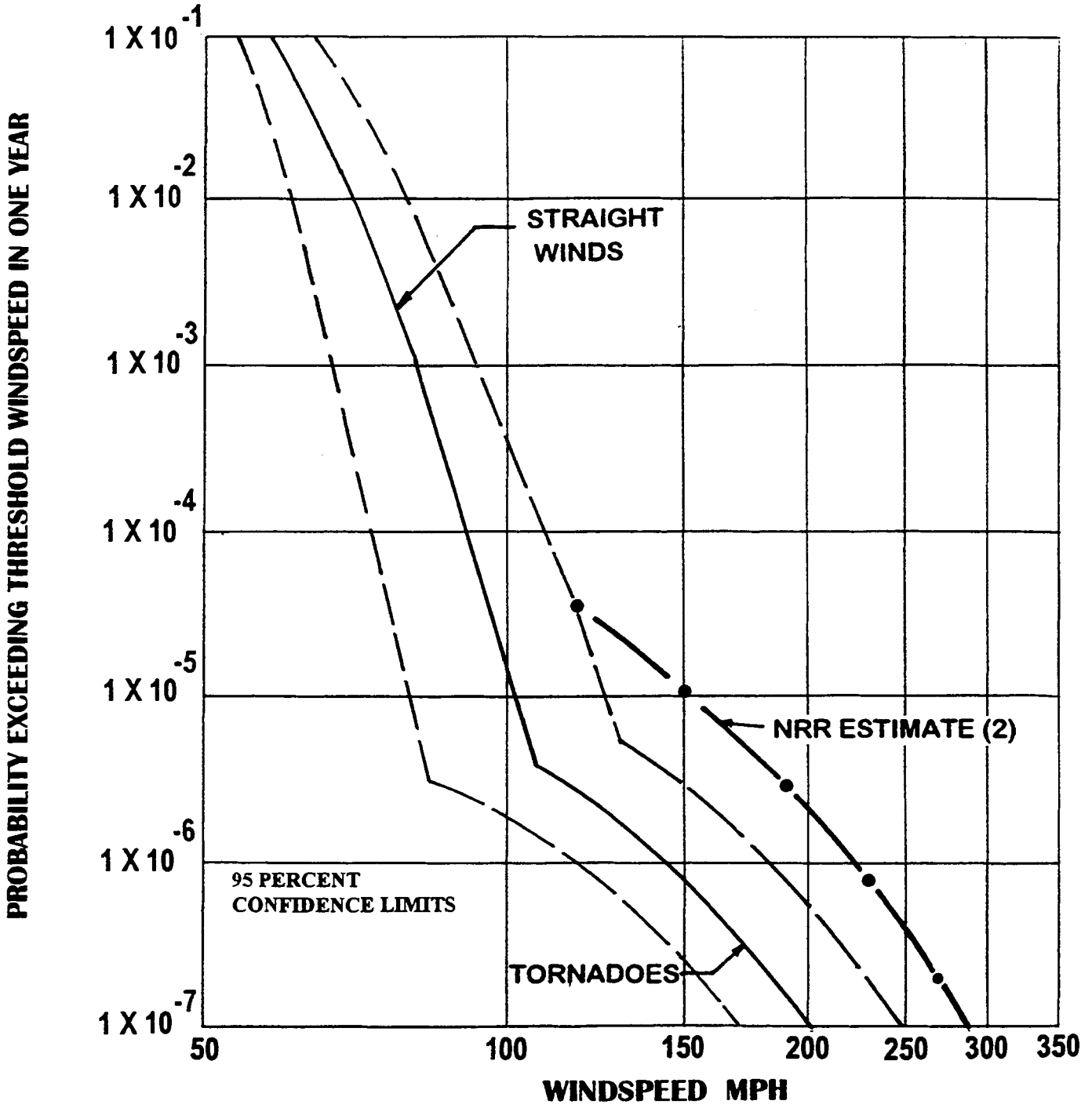

TORNADO AND STRAIGHT WIND HAZARD PROBABILITY MODEL FOR OYSTER CREEK POWER REACTOR SITE, NEW JERSEY (1)

(1) This figure is obtained from the study described in Appendix 2.3a

(2) This curve represents the results of a review of wind speed probabilities conducted by the USNRC.

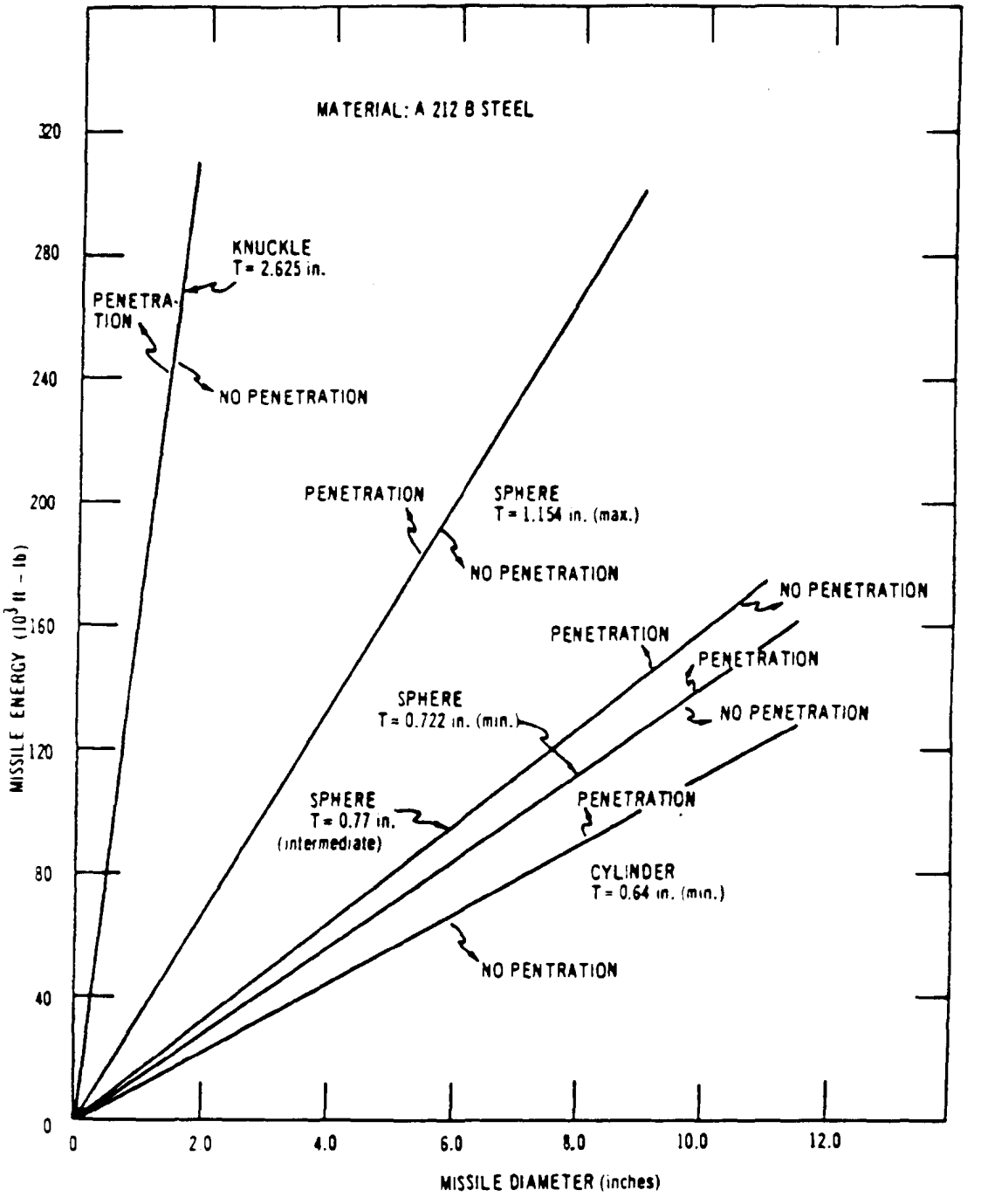

GPU Nuclear — Update - 5

Oyster Creek — 12/90

Energy Necessary to Penetrate Drywell Containment

Fig. 3.5-1

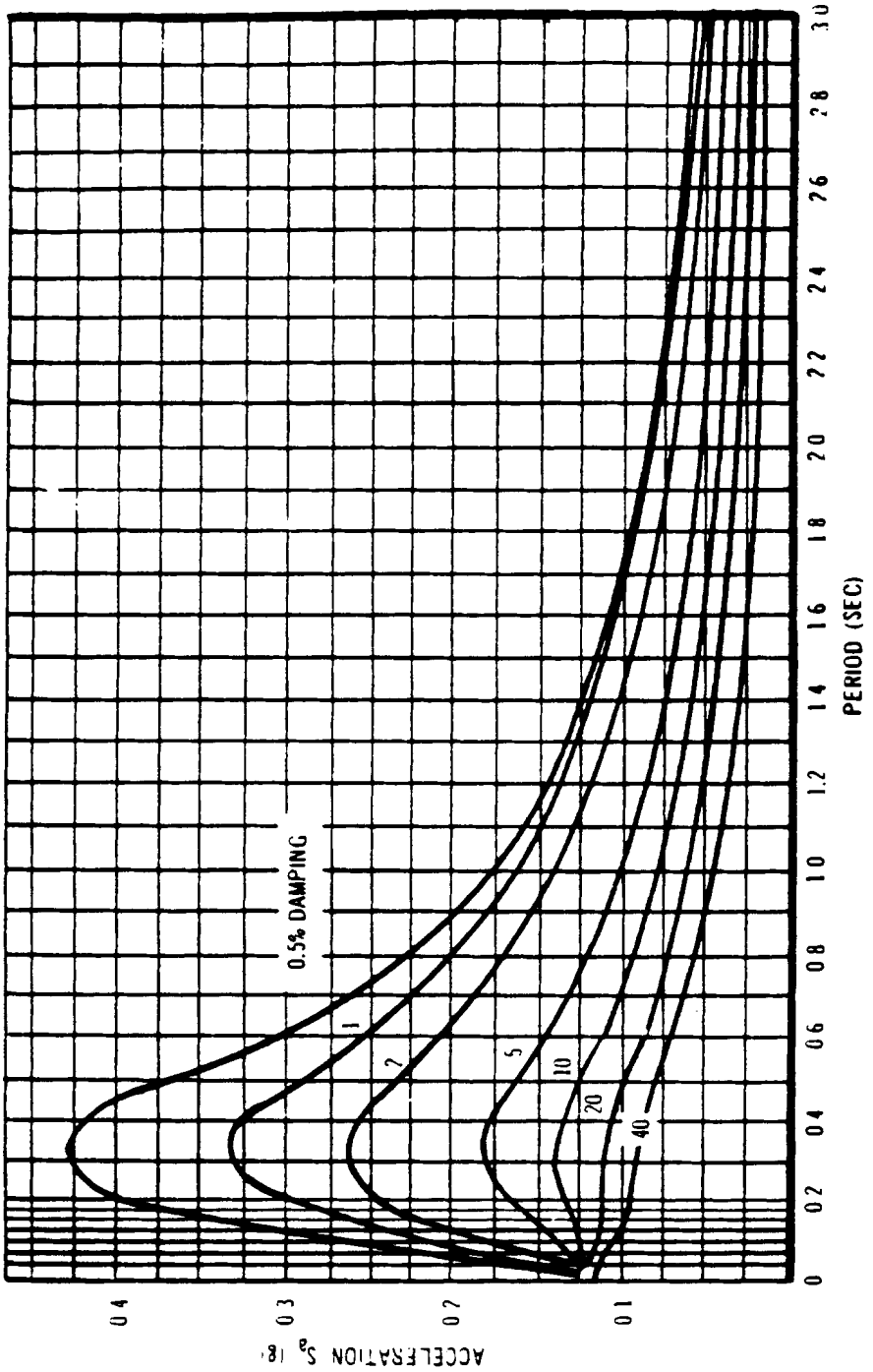

GPU Nuclear

Oyster Creek

Update - 5

12/90

Earthquake Acceleration Response Spectrum

Fig. 3.7-1

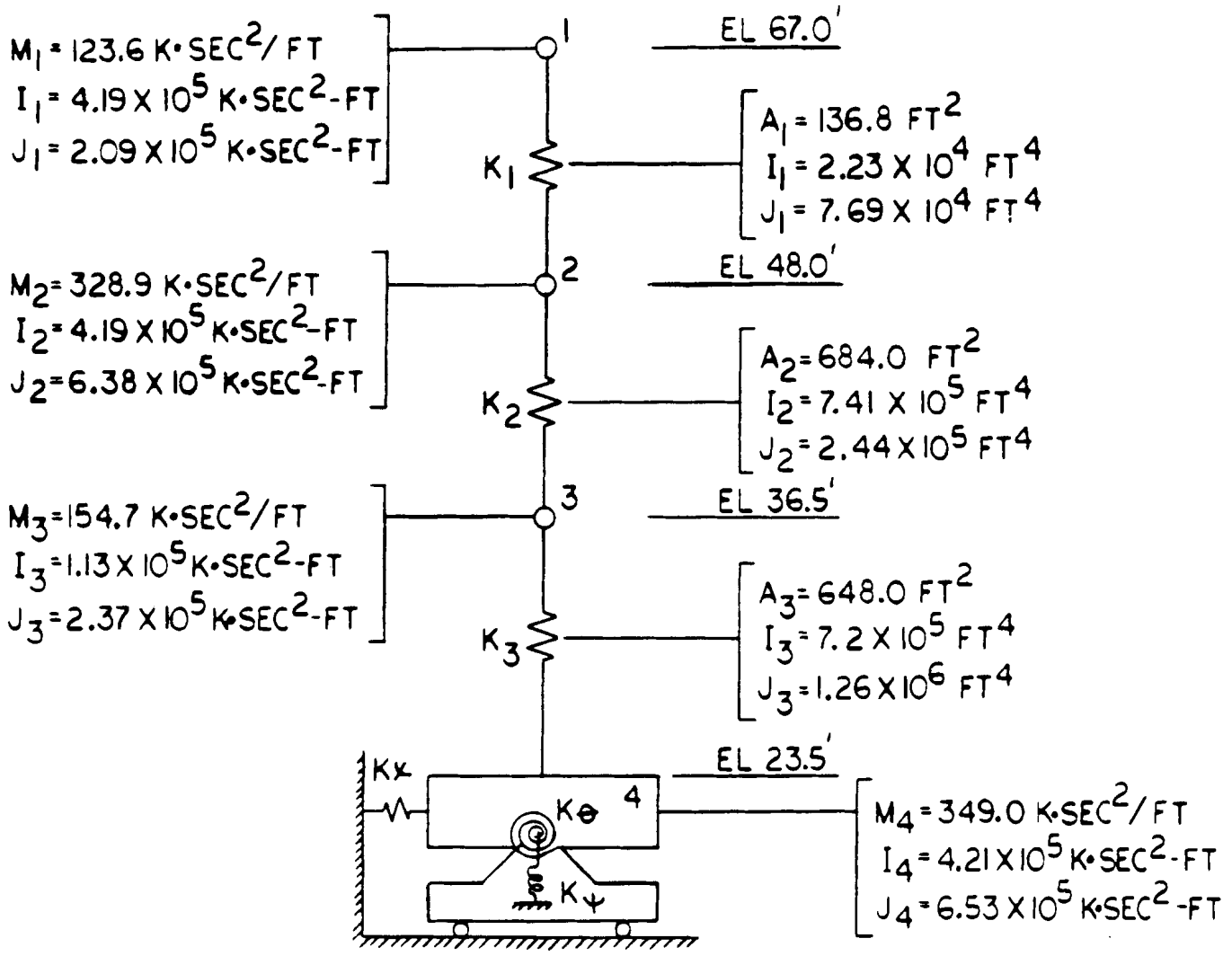

E	Kx (TRANSLATION)	Kθ (ROTATION)	Kψ (TORSION)
34 KSI	4.54×10^5 K/FT	1.31×10^9 K•FT/RAD	1.71×10^9 K•FT/RAD
49 KSI	6.48×10^5 K/FT	1.37×10^9 K•FT/RAD	2.44×10^9 K•FT/RAD
64 KSI	8.43×10^5 K/FT	2.43×10^9 K•FT/RAD	3.18×10^9 K•FT/RAD

GPU Nuclear

Oyster Creek

Update - 5

12/90

Radwaste Building East — West Horizontal Seismic Model

Fig. 3.7-2

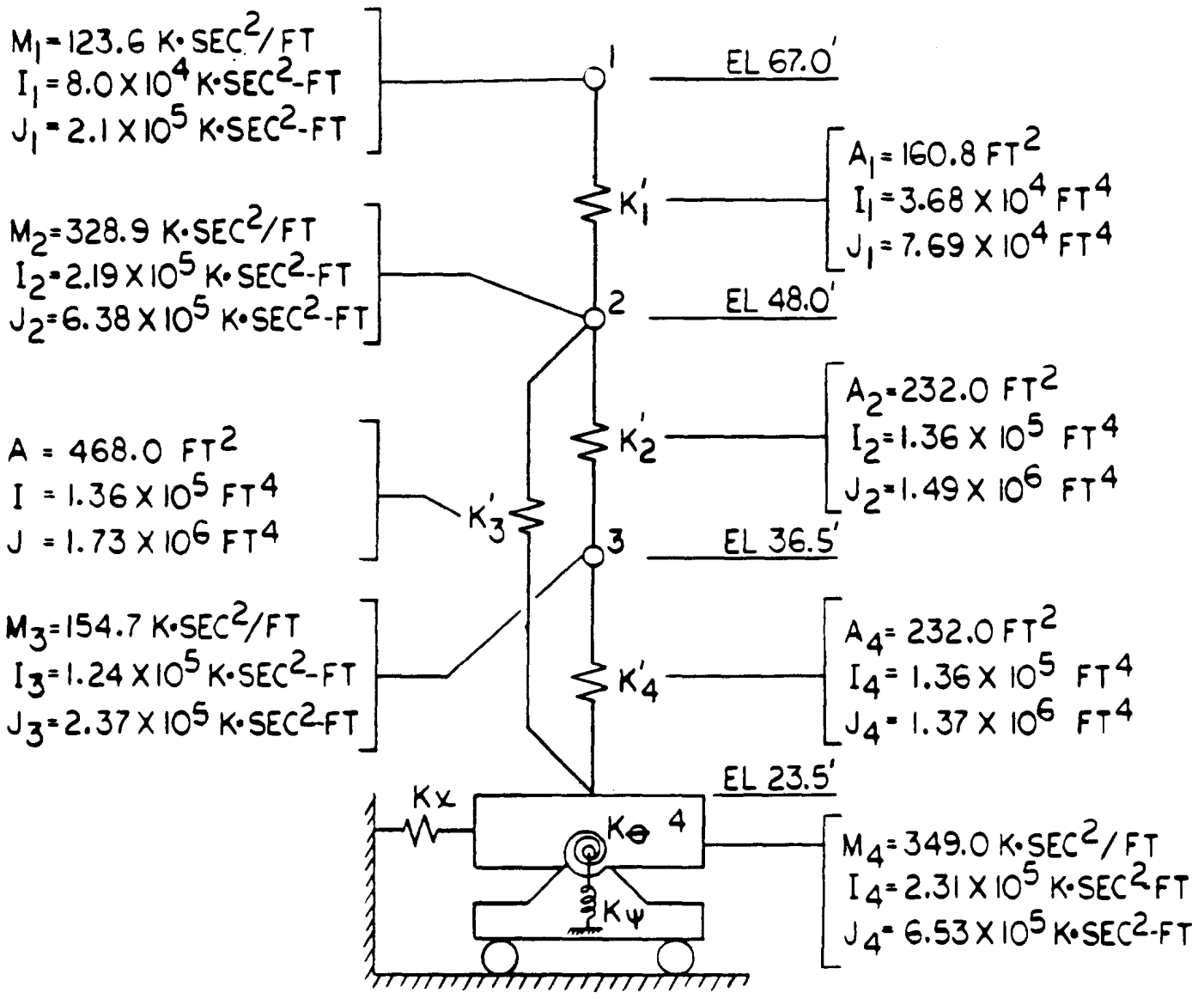

E	Kx (TRANSLATION)	Kθ (ROTATION)	Kψ (TORSION)
34 KSI	4.78×10^5 K/FT	7.65×10^9 K·FT/RAD	1.71×10^9 K·FT/RAD
49 KSI	6.83×10^5 K/FT	1.09×10^9 K·FT/RAD	2.44×10^9 K·FT/RAD
64 KSI	8.88×10^5 K/FT	1.42×10^9 K·FT/RAD	3.18×10^9 K·FT/RAD

GPU Nuclear — Update - 5

Oyster Creek — 12/90

Radwaste Building North — South Horizontal Seismic Model

Fig. 3.7-3

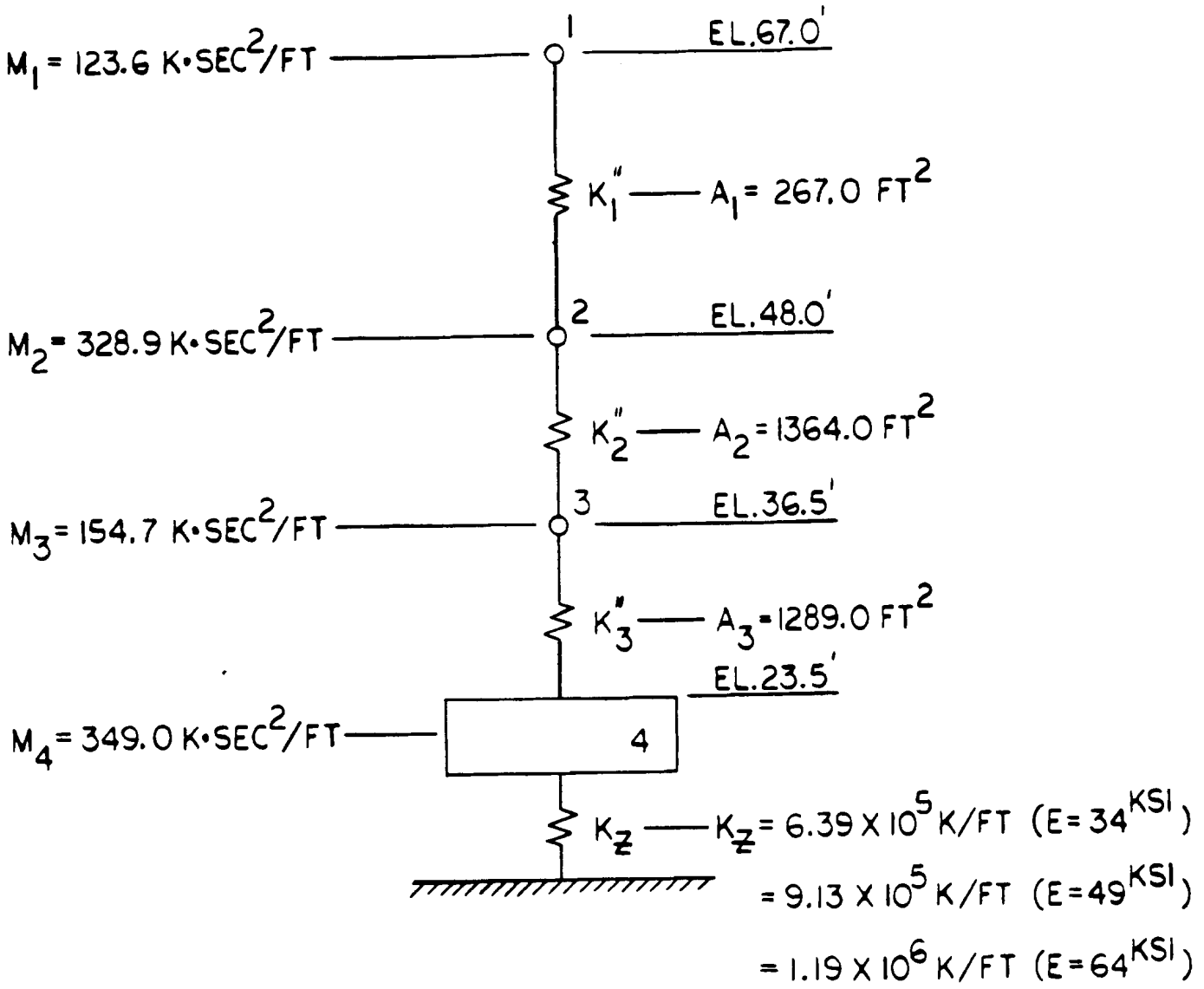

GPU Nuclear — Update - 5

Oyster Creek — 12/90

Radwaste Building Vertical Seismic Model

Fig. 3.7-4

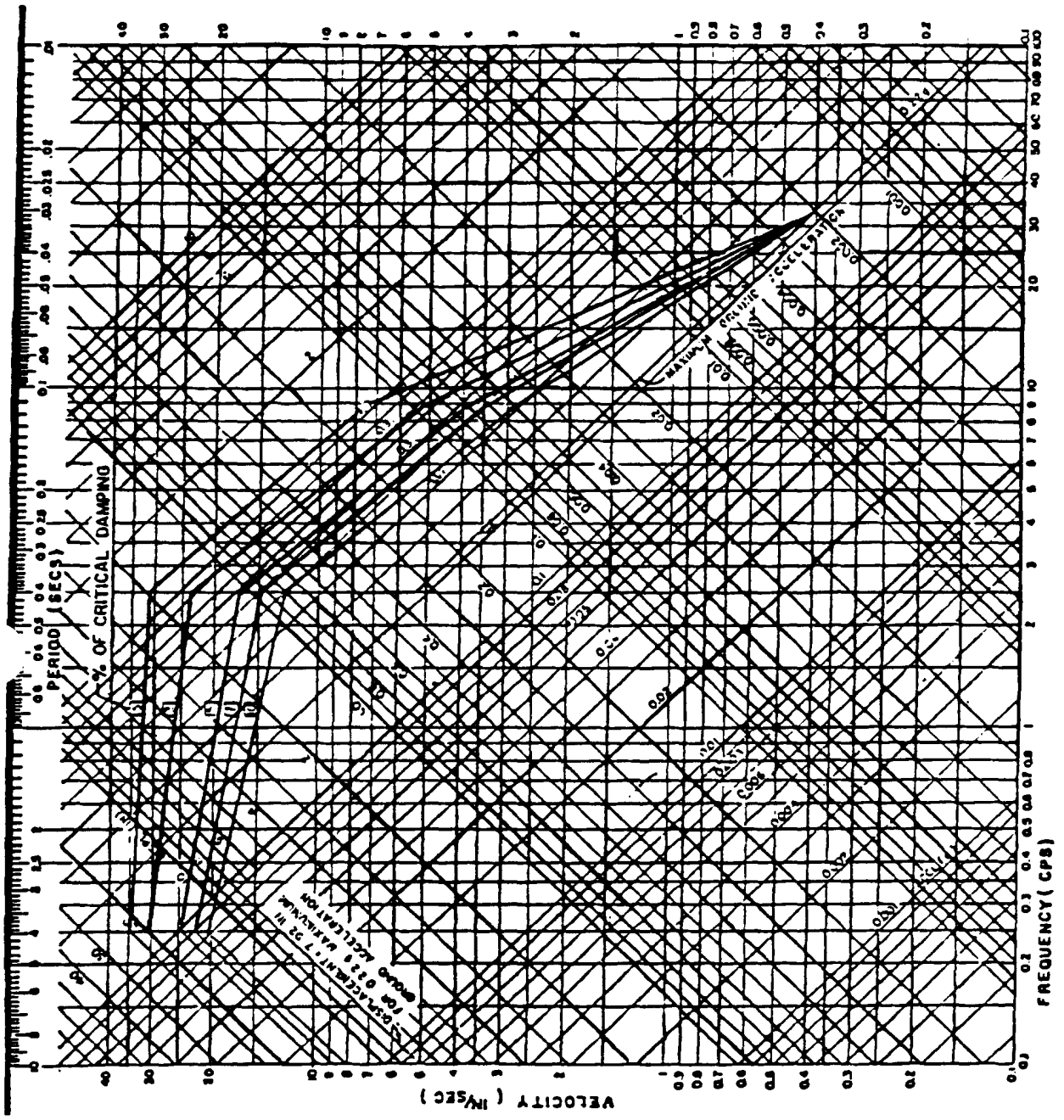

GPU Nuclear	Update - 5
Oyster Creek	12/90

Response Spectra — Safe Shutdown Earthquake (Horizontal)

Fig. 3.7-5

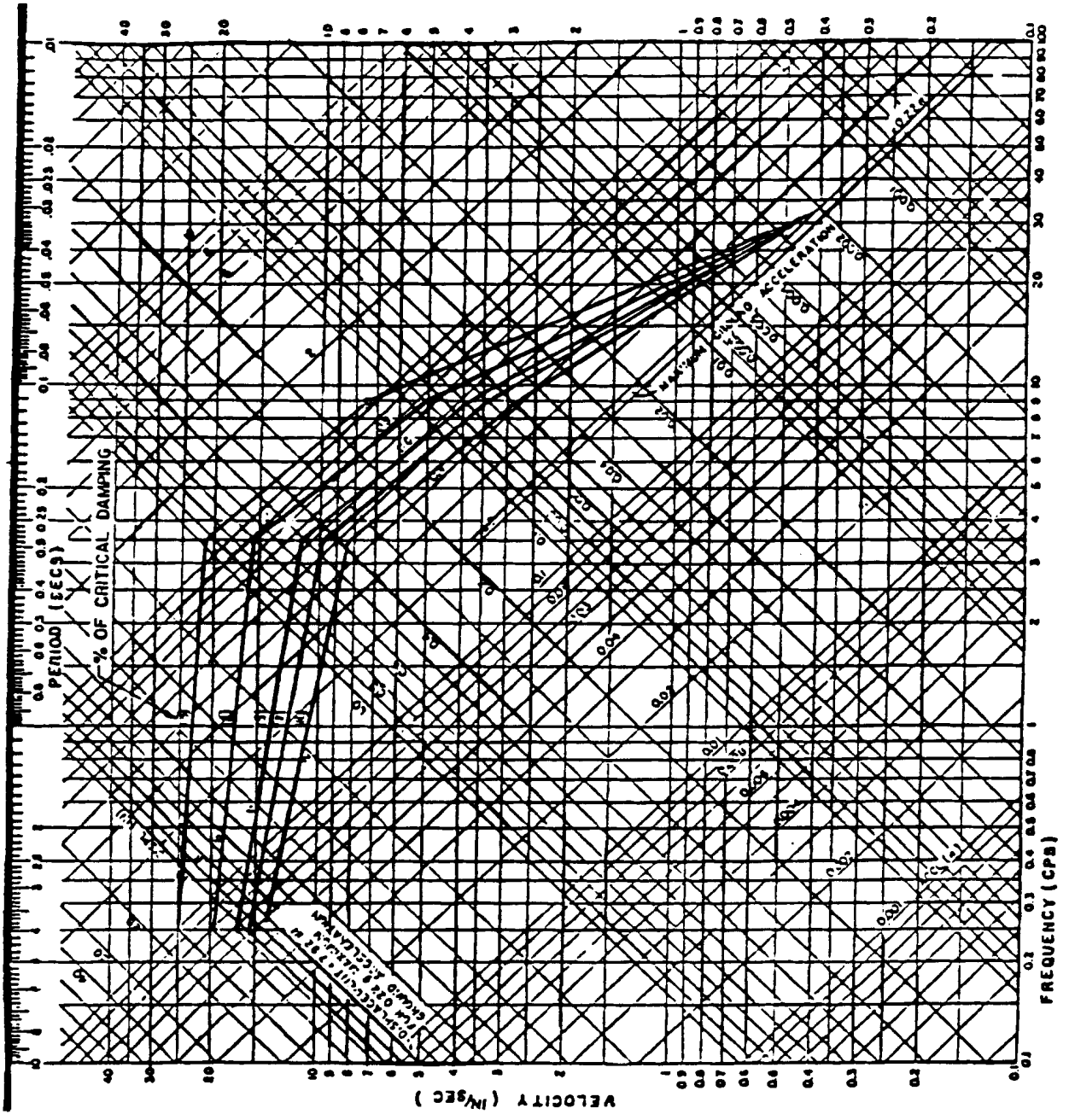

GPU Nuclear	Update - 5
Oyster Creek	12/90

Response Spectra — Safe Shutdown Earthquake (Vertical)

Fig. 3.7-6

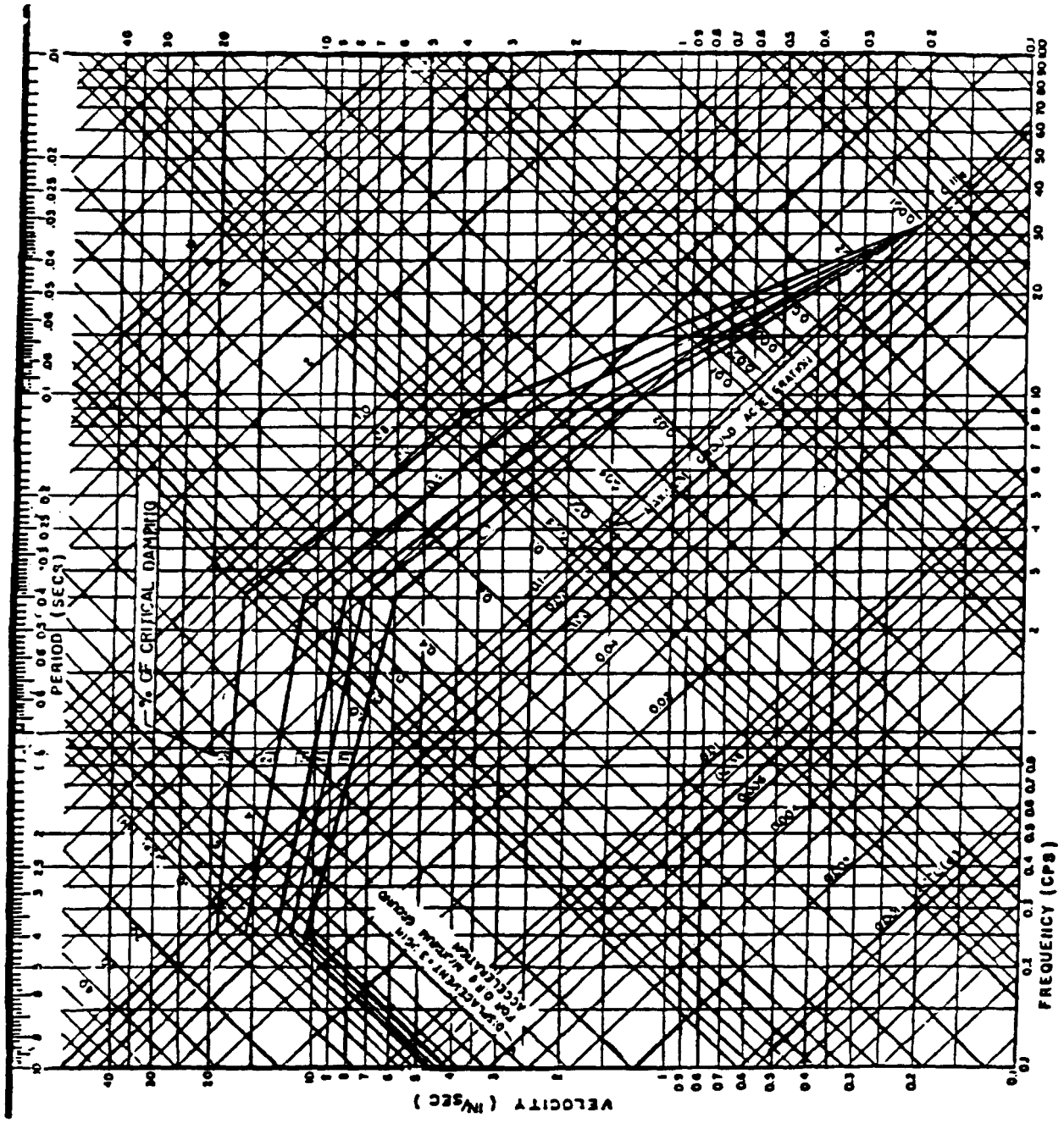

GPU Nuclear

Oyster Creek

Update - 5

12/90

Response Spectra — Operating Basis Earthquake (Horizontal)

Fig. 3.7-7

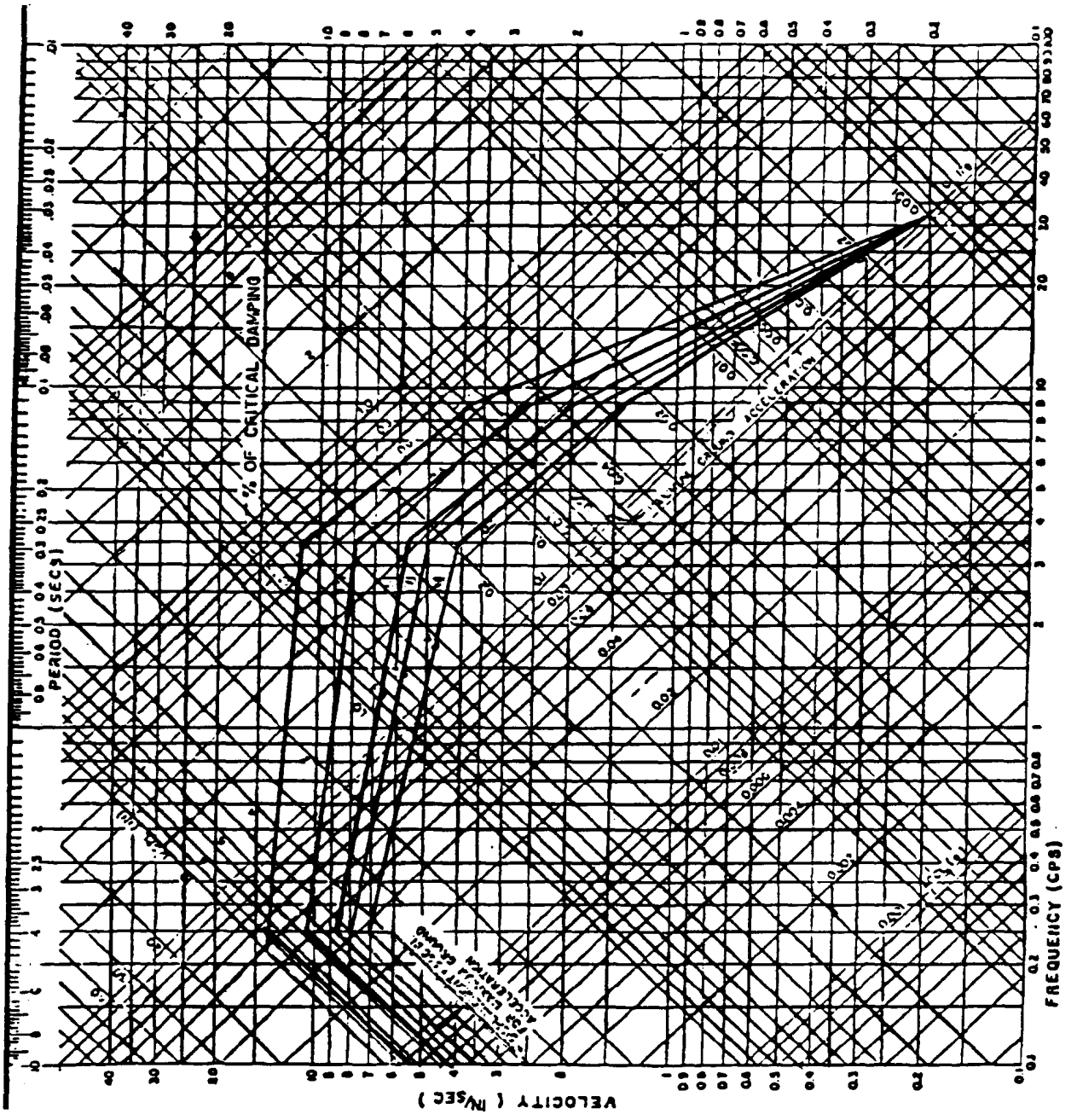

GPU Nuclear	**Update - 5**
Oyster Creek	**12/90**

Response Spectra — Operating Basis Earthquake (Vertical)

Fig. 3.7-8

Figures 3.7-9 through 3.7-13

Deleted

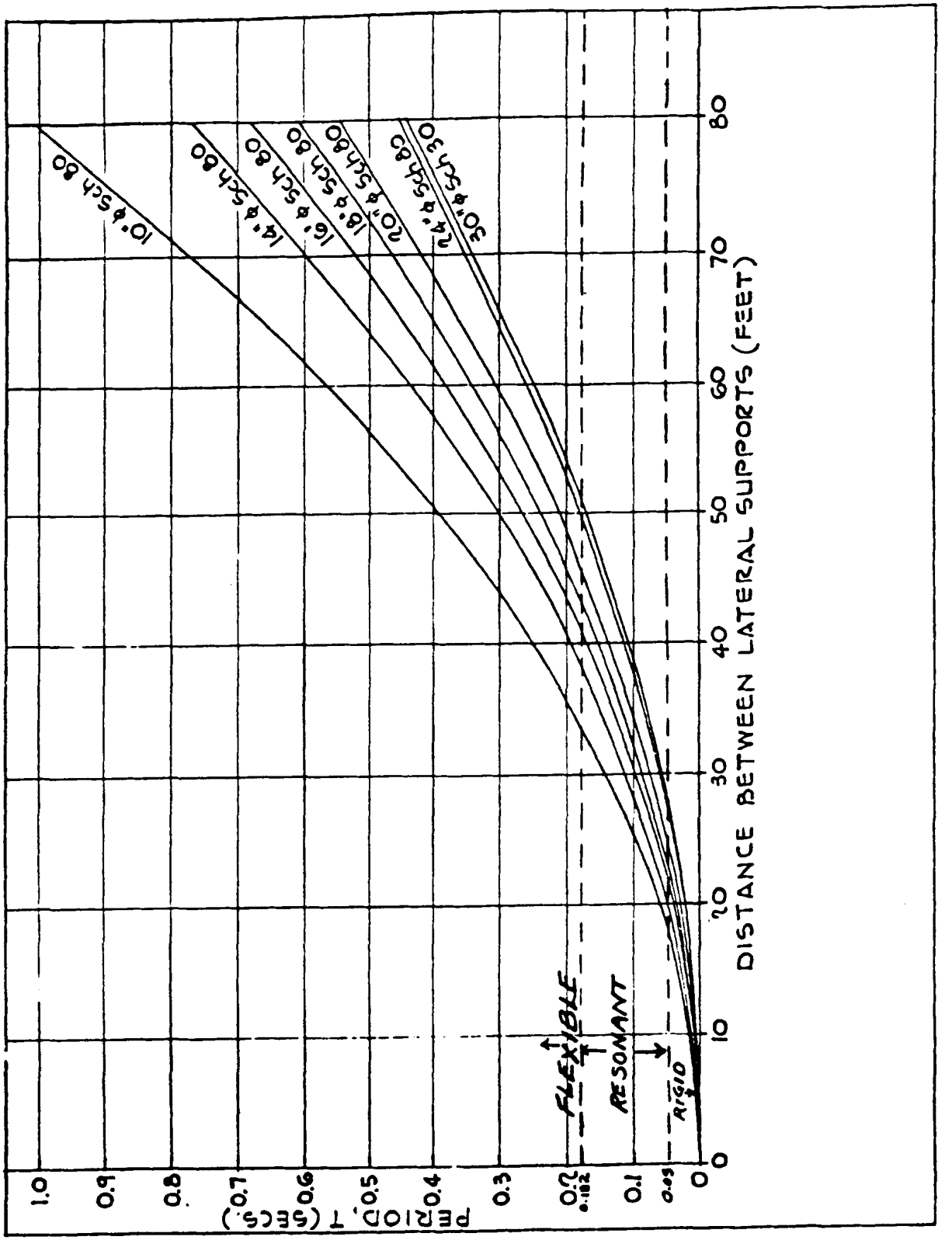

GPU Nuclear | Update - 5

Oyster Creek | 12/90

Natural Period as a Function of Pipe Size and Span

Fig. 3.7-14

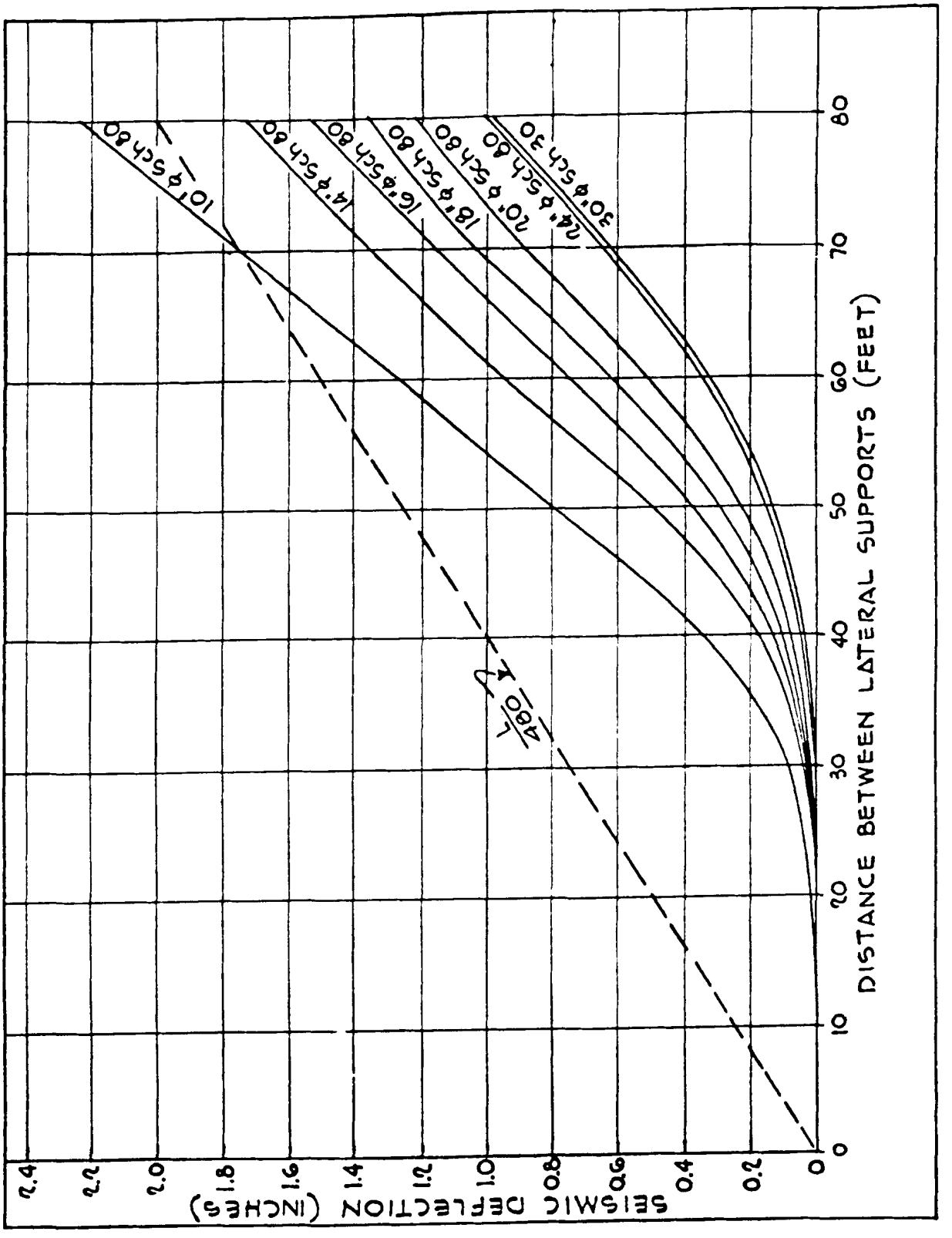

GPU Nuclear Update - 5

Oyster Creek 12/90

Deflection as a Function of Pipe Size and Span

Fig. 3.7-15

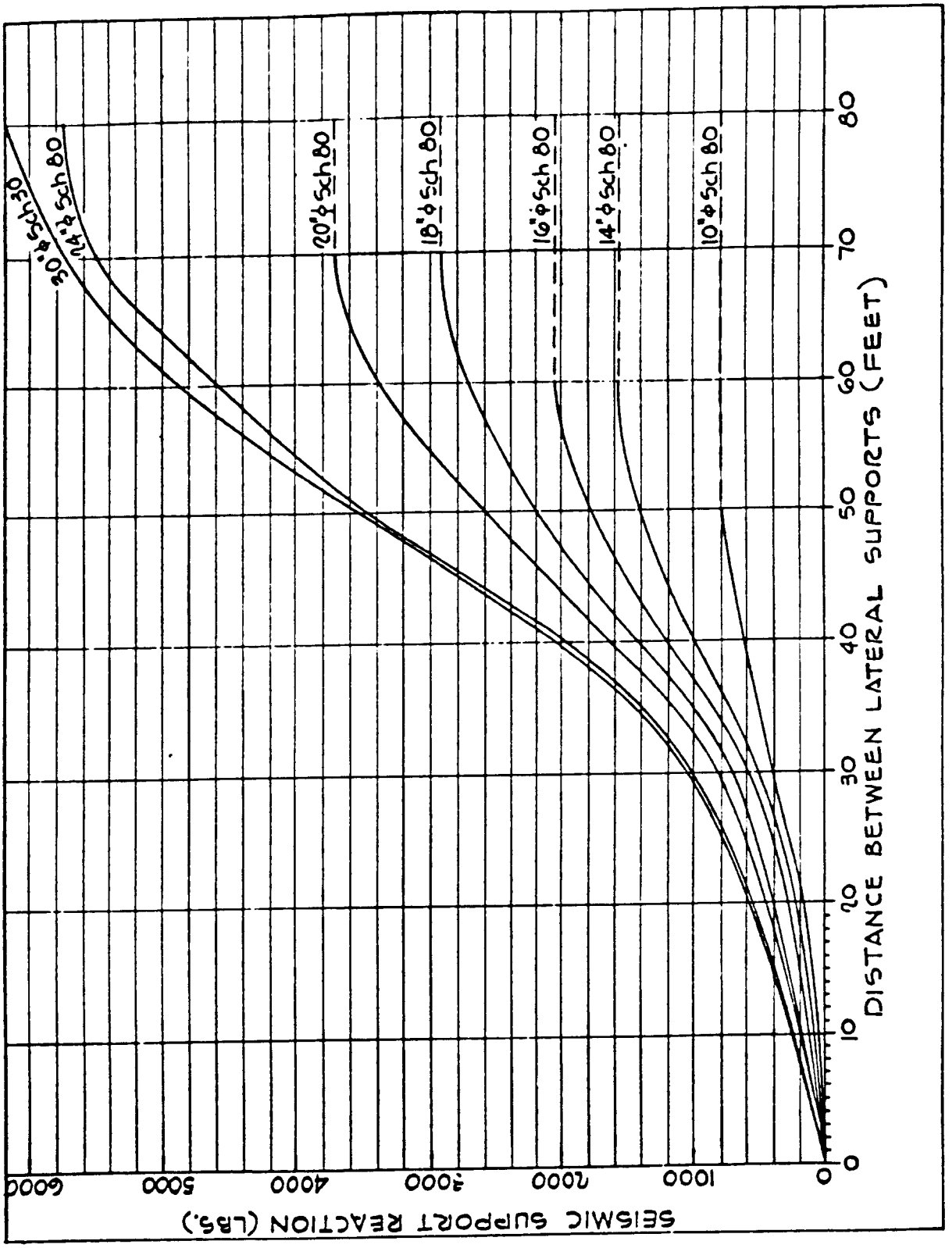

GPU Nuclear

Oyster Creek

Update - 5

12/90

Support Reaction as a Function of Pipe Size and Span

Fig. 3.7-16

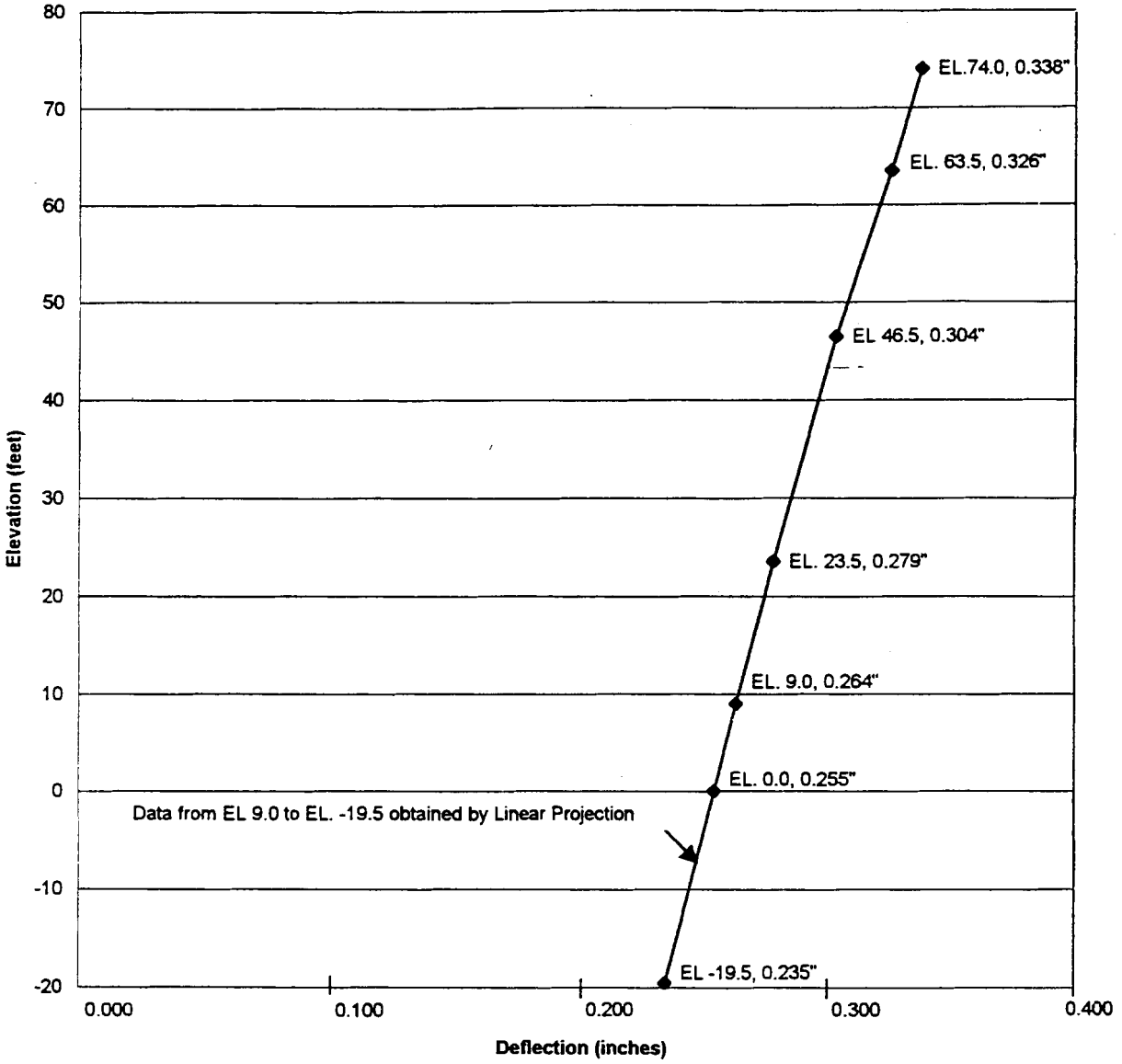

GPU NUCLEAR

Update 11
04/99

Oyster Creek

Maximum Relative Deflection Between Reactor Building and Turbine Building

Fig. 3.7-17

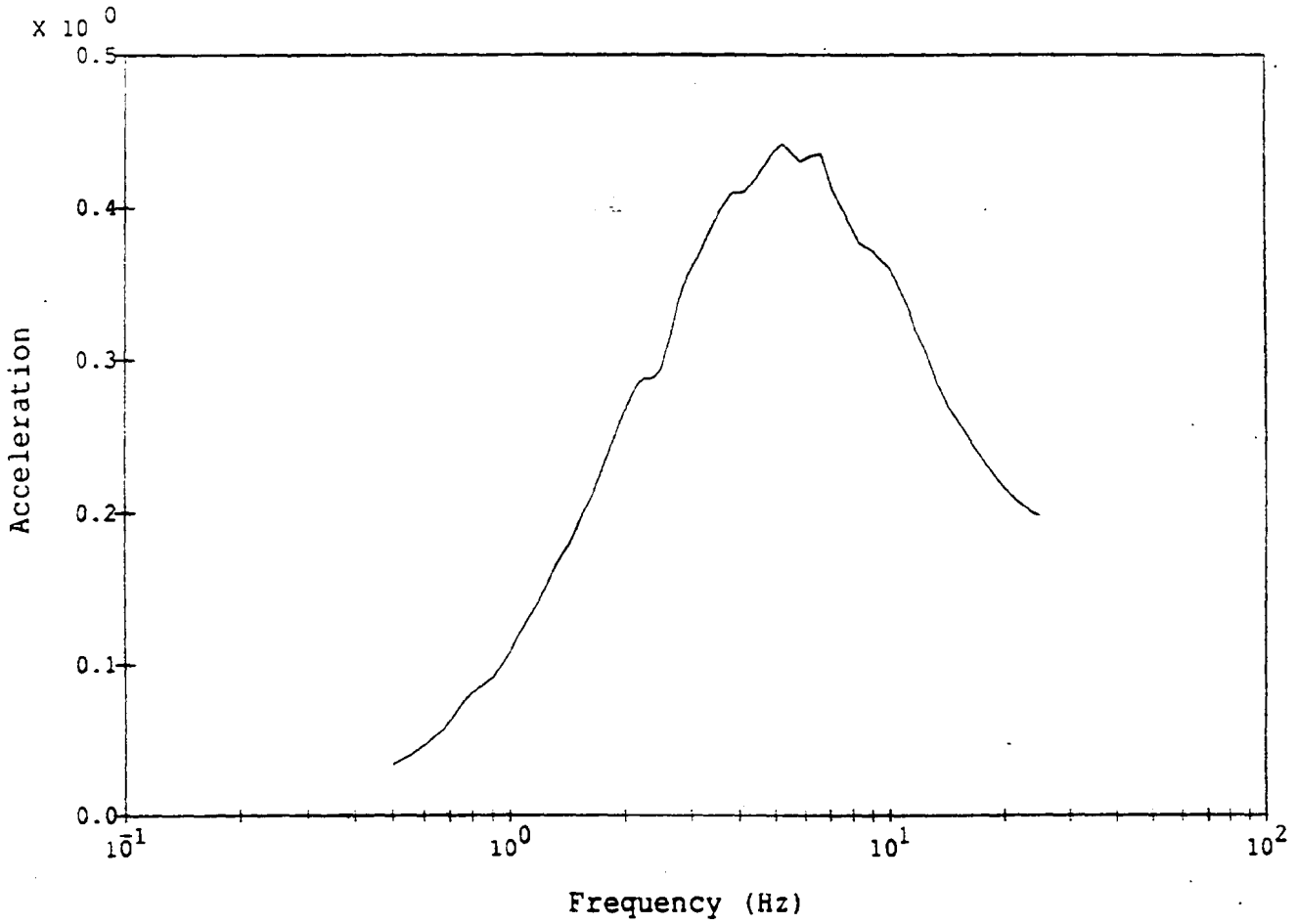

Notes:

Accelerations in g's
Spectral Damping 5%
PGA = 0.184g

Figure 3.7-18: **OCNGS Site Specific Response Spectra, Horizontal Component, 5% Damping**

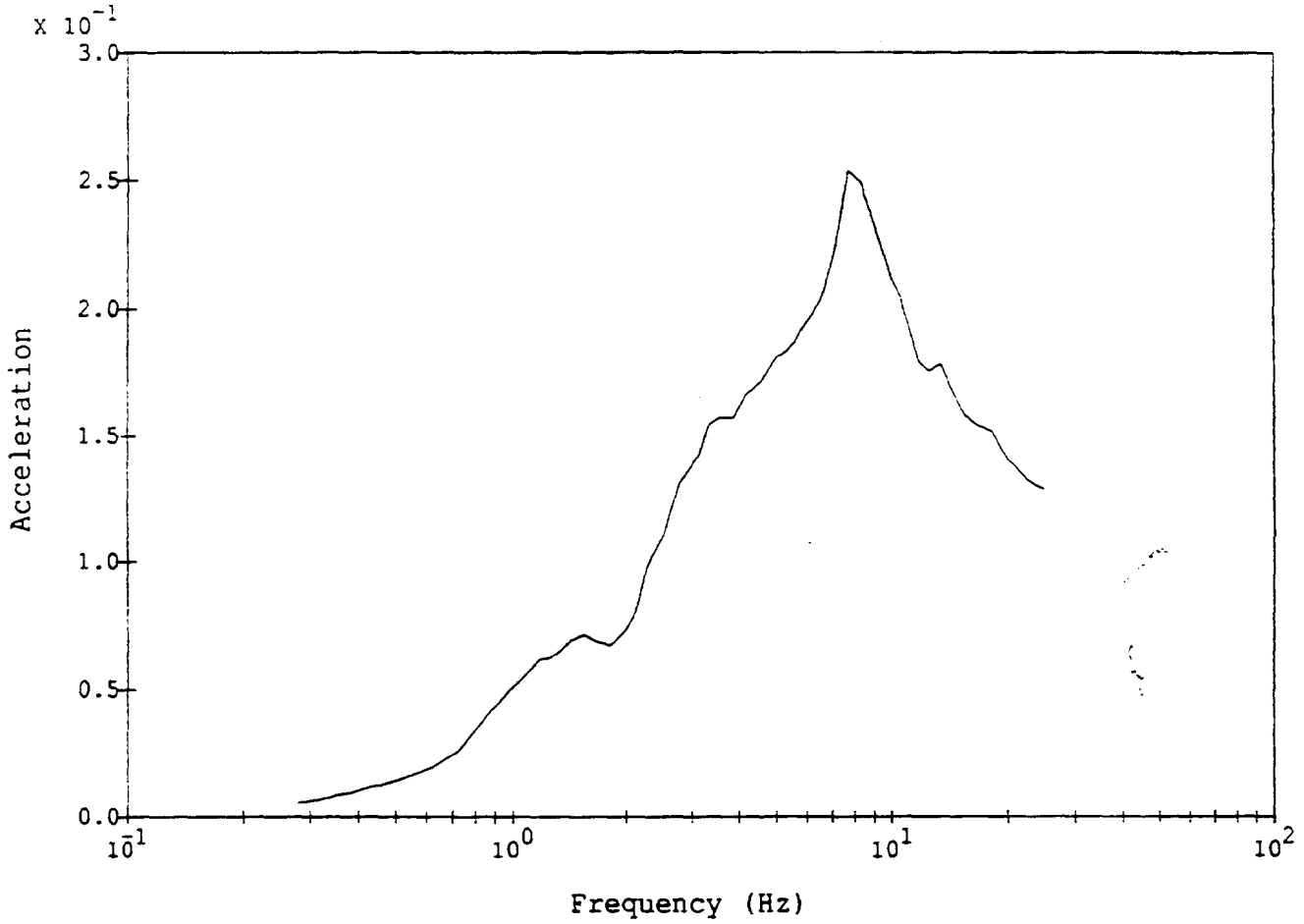

Notes:

Accelerations in g's
Spectral Damping 5%
PGA = 0.0952g

Figure 3.7-19: **OCNGS Site Specific Response Spectra, Vertical Component, 5% Damping**

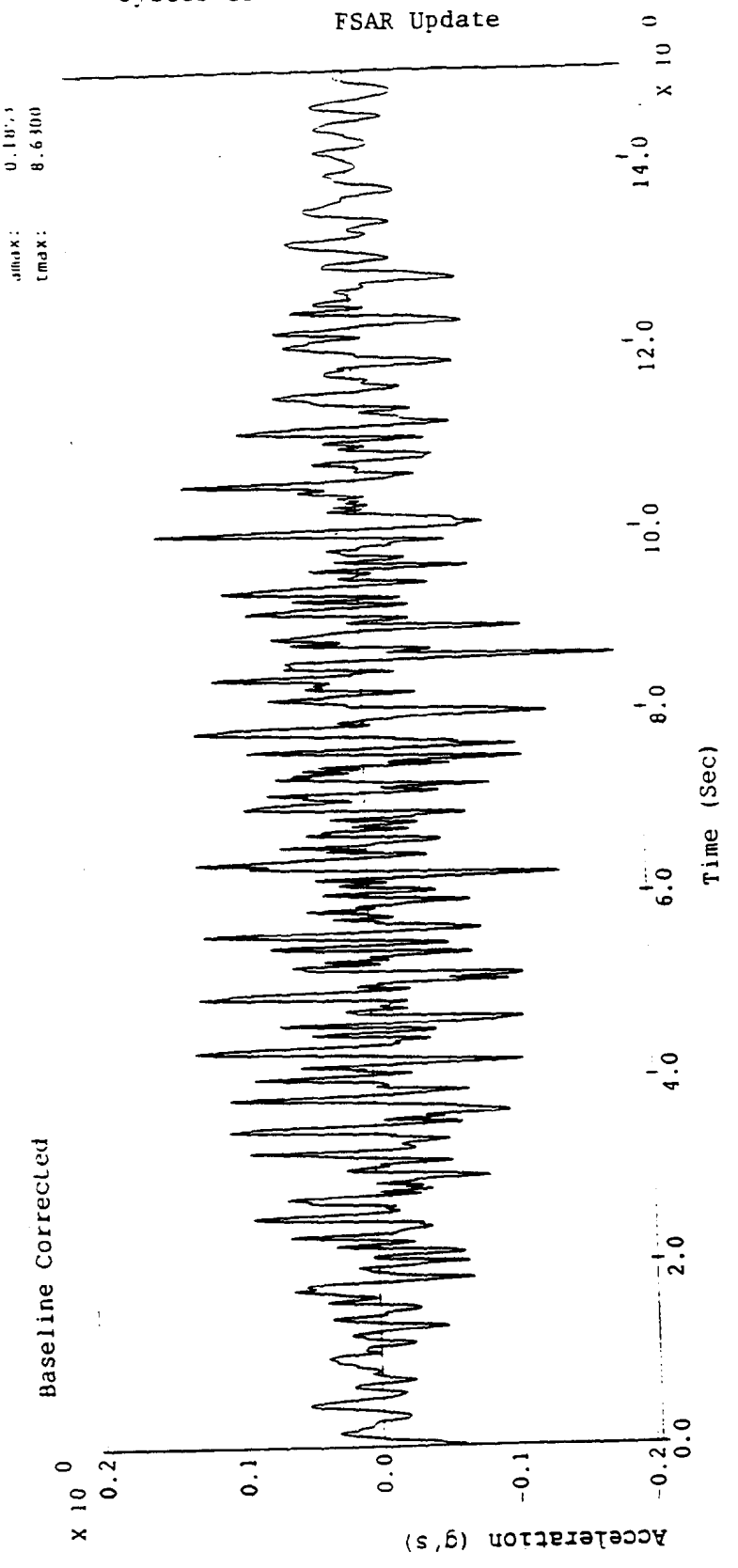

Figure 3.7-20: Artificial Acceleration Time History, Horizontal Component 1

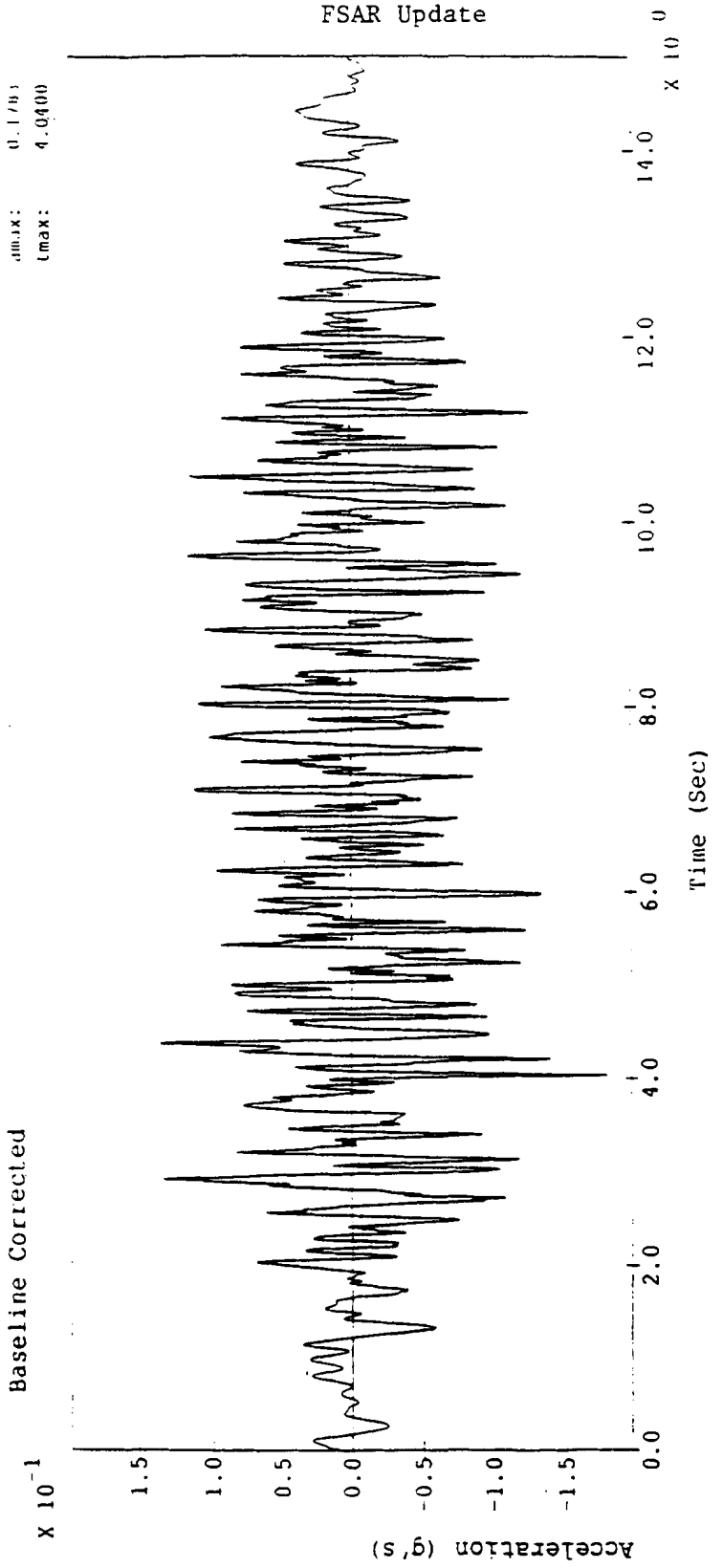

Figure 3.7-21: Artificial Acceleration Time History, Horizontal Component 2

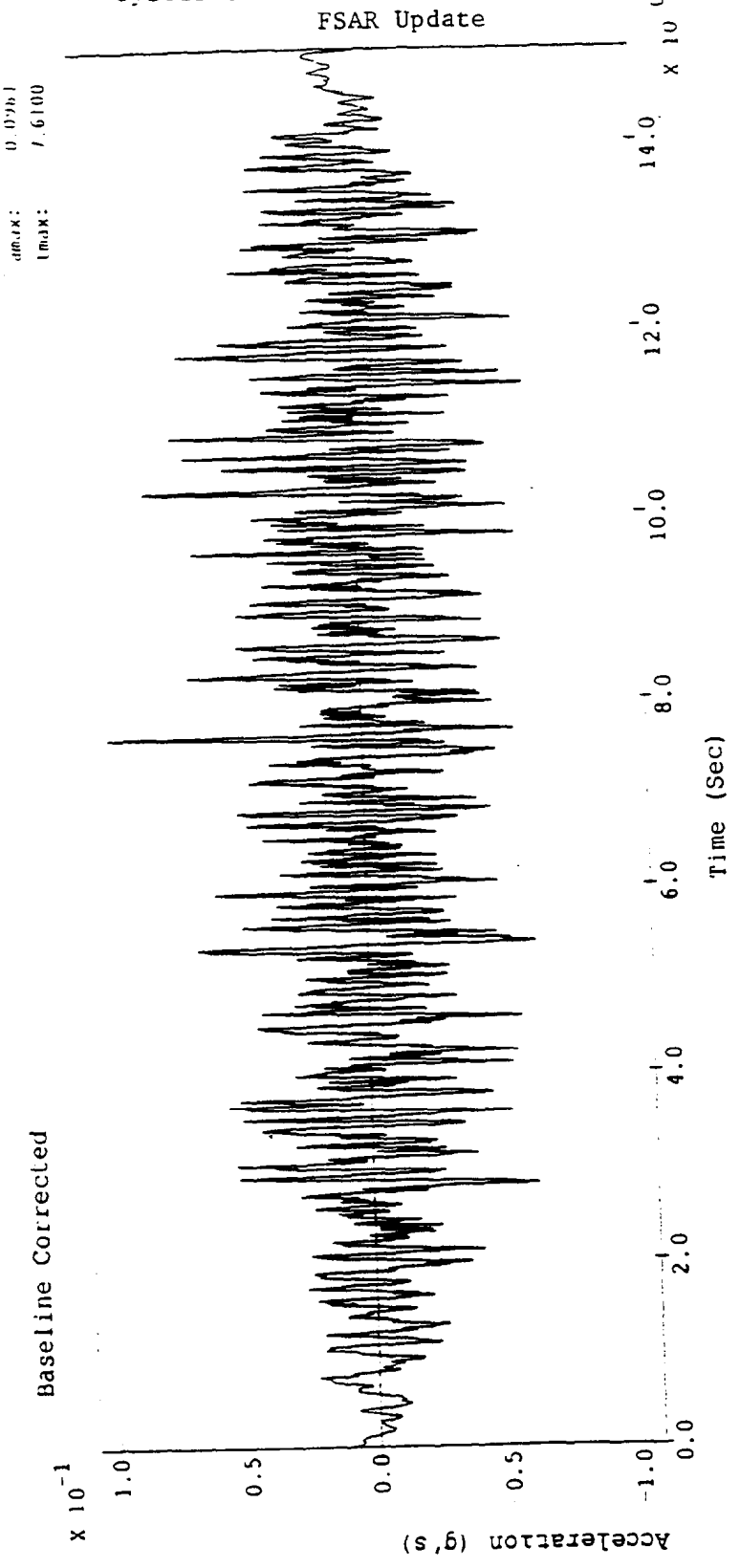

Figure 3.7-22: Artificial Acceleration Time History, Vertical Component

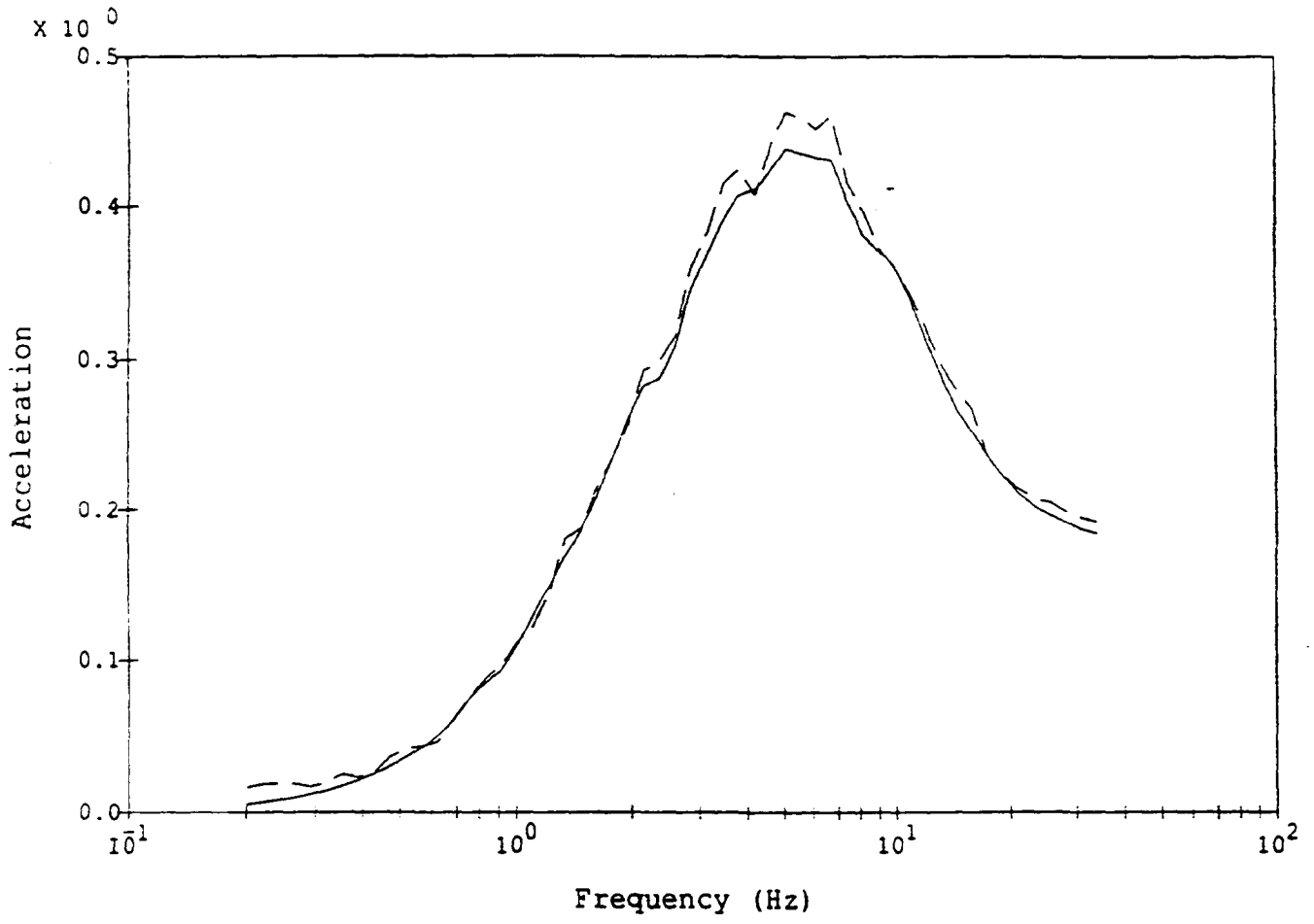

Legend:

Target
Horizontal 1

Notes:

Accelerations in g's
Spectral Damping 5%
Target PGA = 0.184g
SRP Frequencies
Baseline Corrected

Figure 3.7-23: Comparison of Response Spectra, Horizontal 1, 5% Damping Artificial Time History vs. Target

Figure 3.7-25

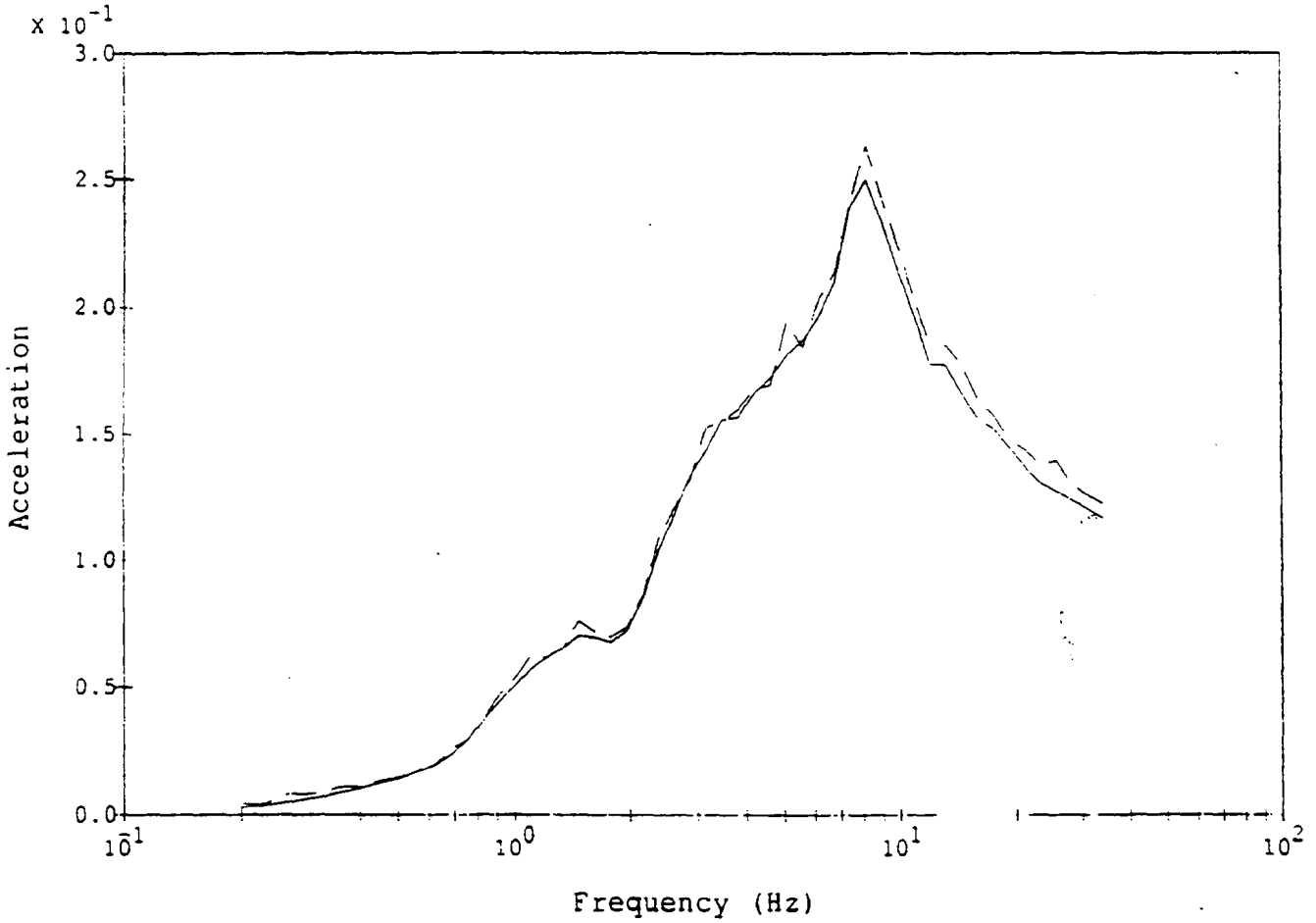

Legend:

Target
Vertical — — — — —

Notes:

Accelerations in g's
Spectral Damping 5%
Target PGA = 0.0952g
SRP Frequencies
Baseline Corrected

Figure 3.7-25

Comparison of Response Spectra, Vertical, 5% Damping Artificial Time History vs. Target

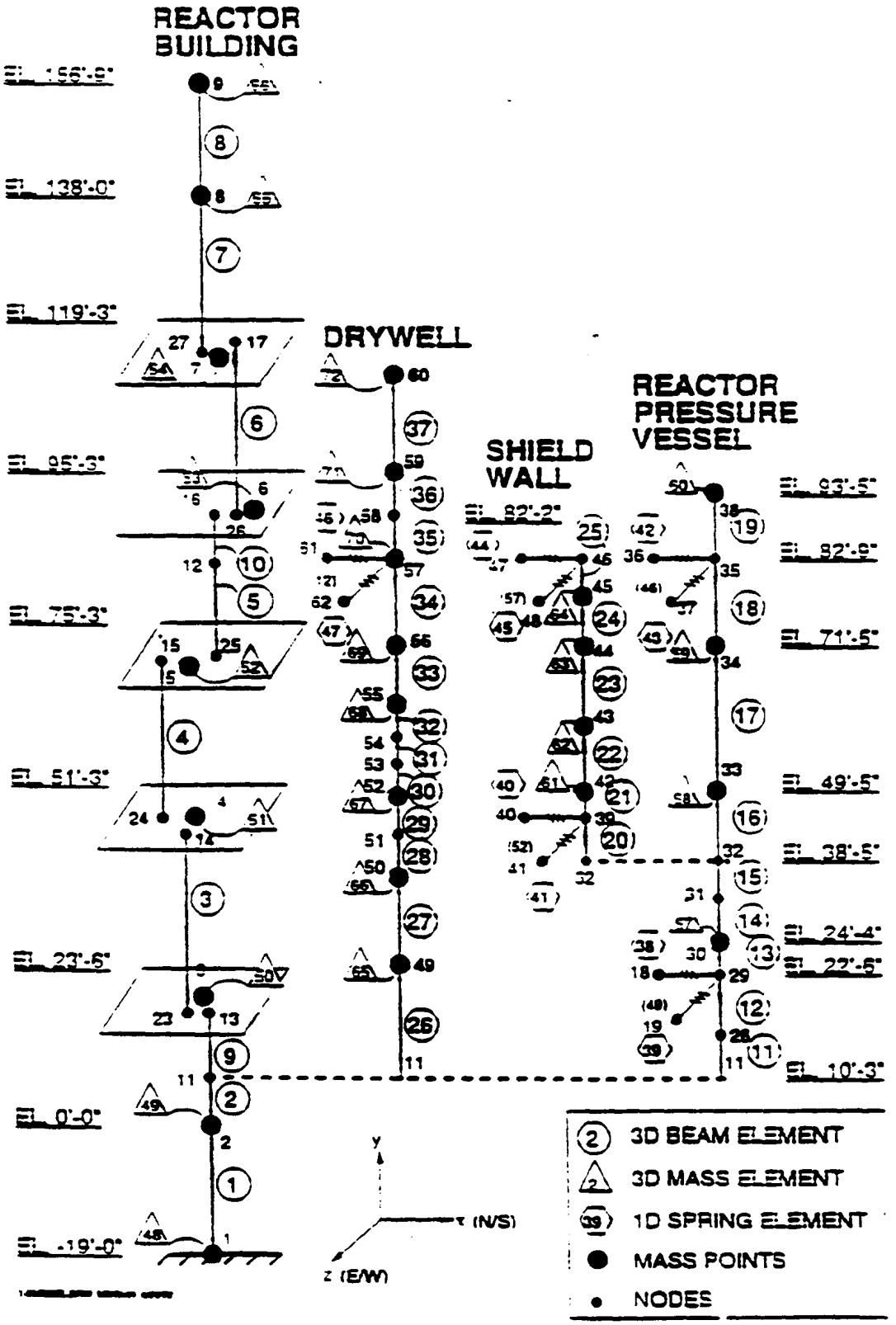

Figure 3.7-26 : 3-D coupled model. Oyster Creek Reactor Building.

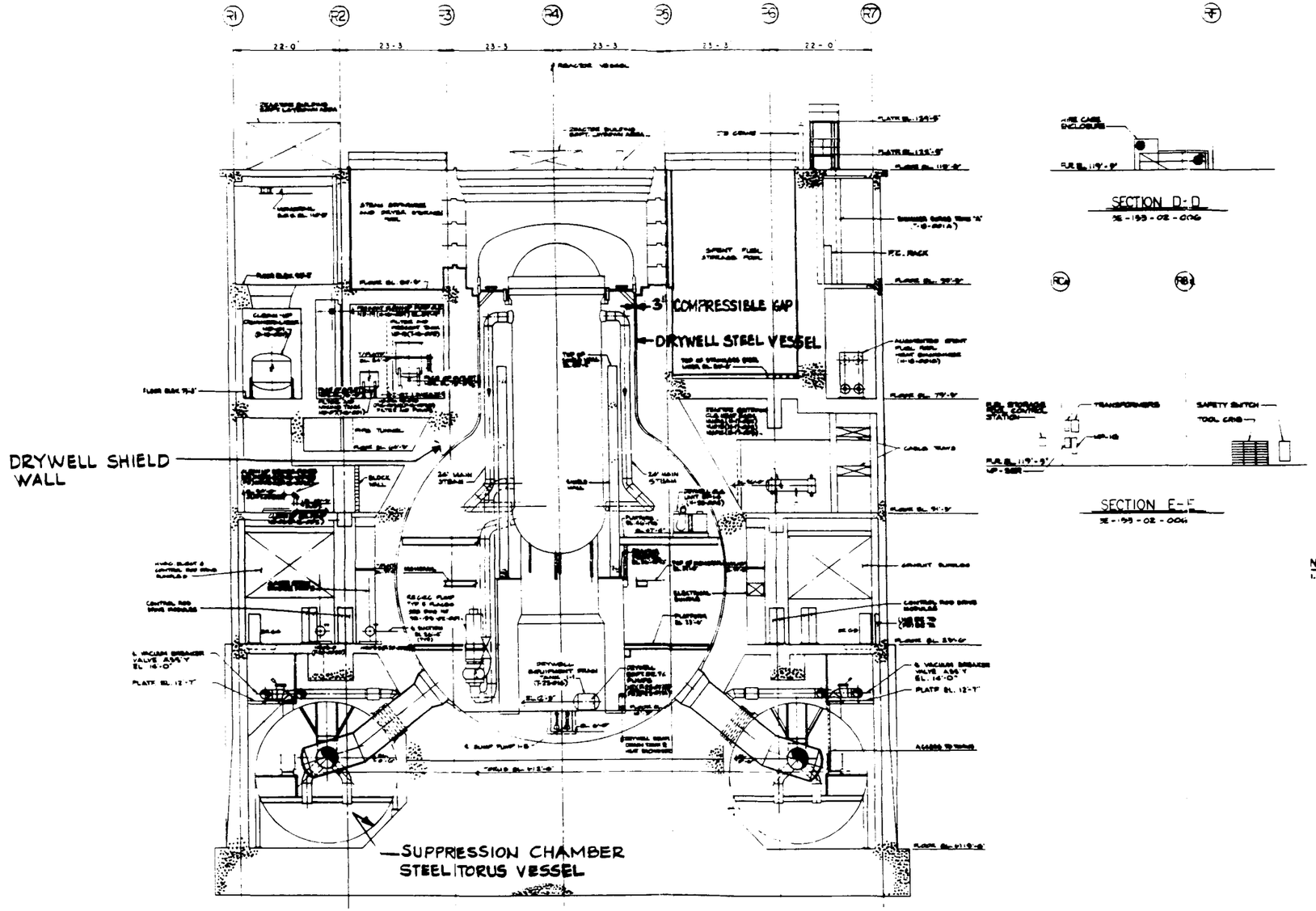

GPU Nuclear	Update - 5
Oyster Creek	12/90
Containment System	
	Fig. 3.8-1

Figures 3.8-2A through 3.8-3C

Deleted

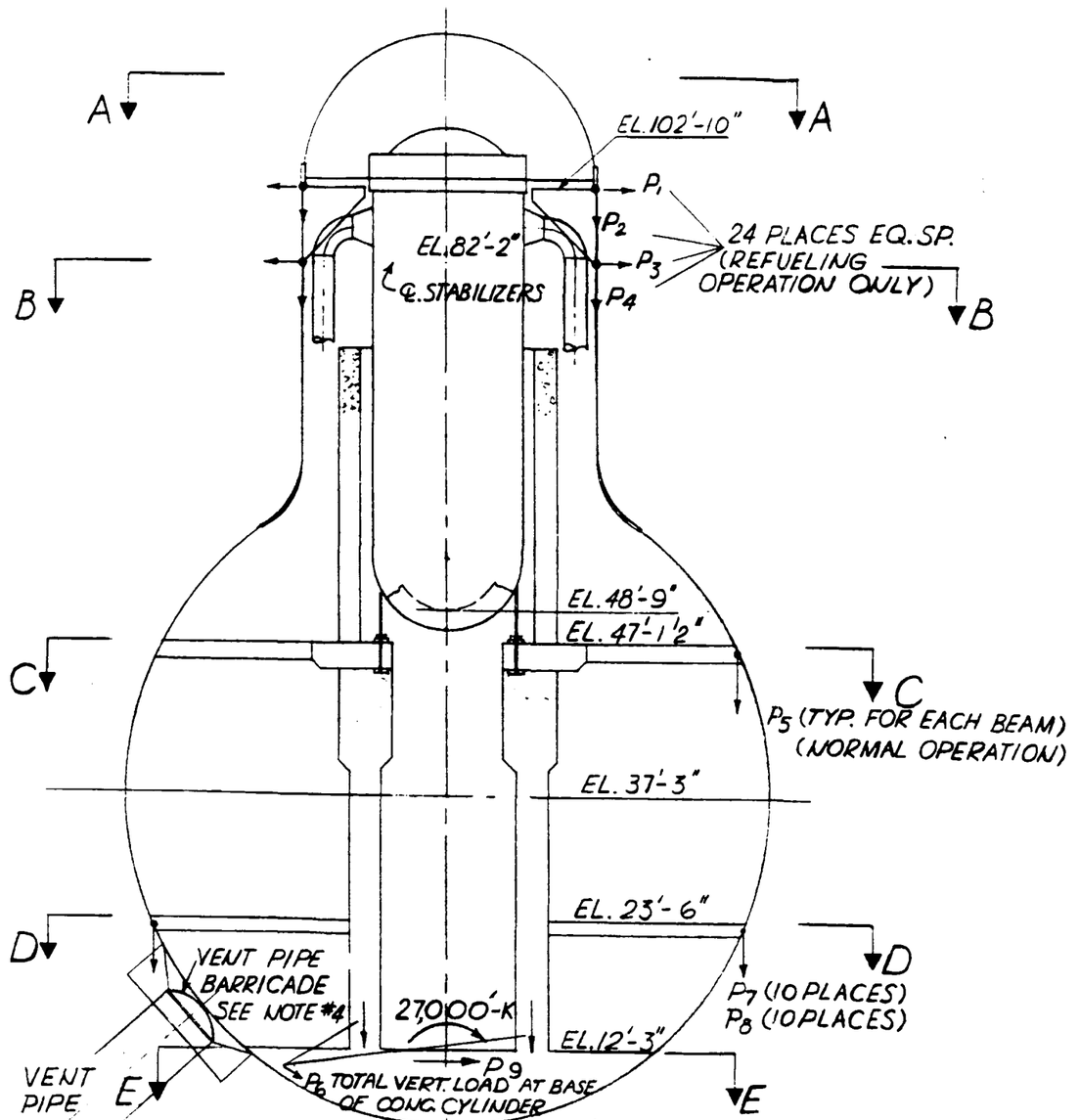

ELEVATION

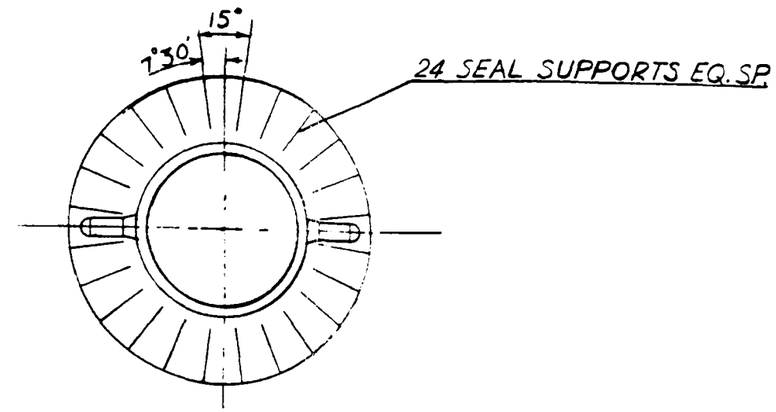

PLAN A-A

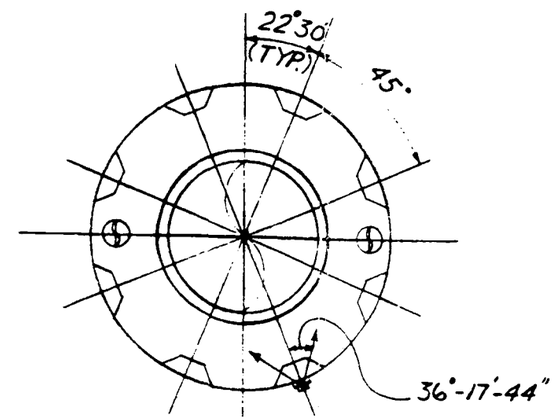

PLAN B-B

GPU Nuclear

Oyster Creek

Update - 5

12/90

Static and Seismic Loading on Drywell
(Elevation, Plan A-A and B-B)

Fig. 3.8-4

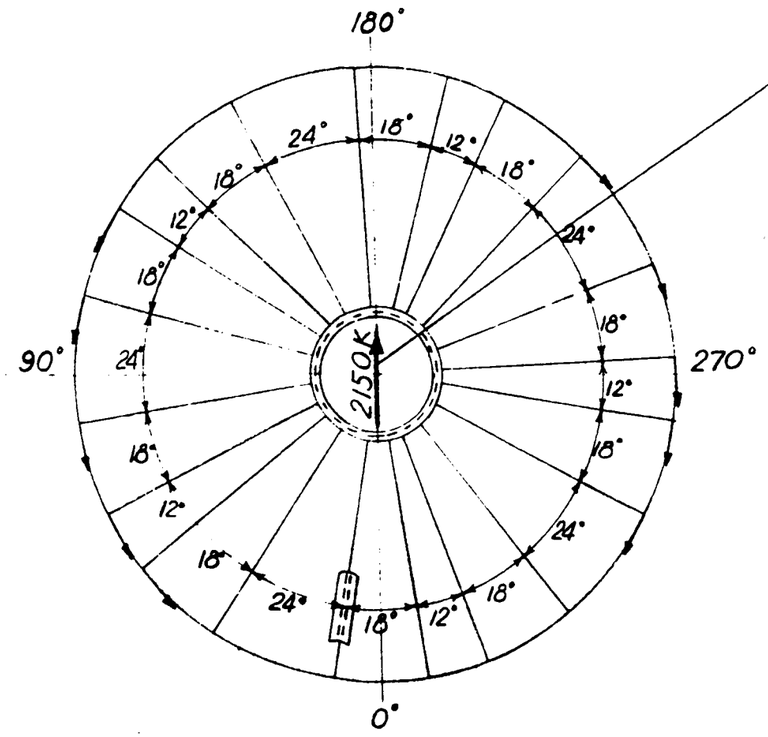

PLAN C-C

THE HORIZONTAL EARTHQUAKE FORCE IS TRANSMITTED TO THE DRYWELL SHELL TANGENTIALLY BY 5 BEAMS ON EACH SIDE OF THE VERTICAL AXIS OF THE DRY WELL. THESE ARE THE BEAMS MOST NEARLY PERPENDICULAR TO THE DIRECTION OF THE EARTHQUAKE. (TOTAL OF 10 BEAMS)(THIS LOAD IS THE LOAD AT NORMAL OPERATING CONDITIONS)

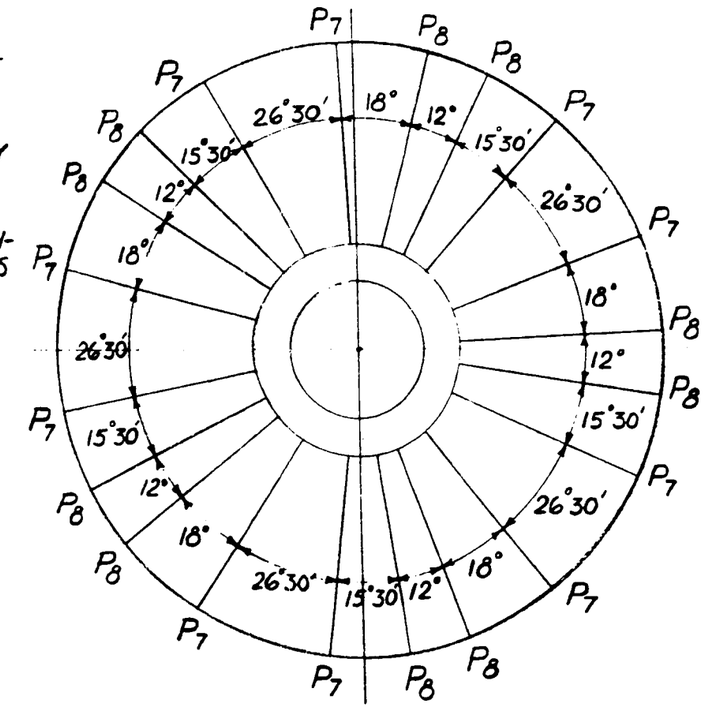

PLAN D-D

LOAD	STATIC	EARTH-QUAKE	TOTAL	REMARKS
P_1	15.0K	3.8K	18.8K	REFUELING OPERATION ONLY
P_2	14.0K	3.5K	17.5K	↑
P_3	15.0K	3.8K	18.8K	↓
P_4	15.0K	3.8K	18.8K	REFUELING OPERATION ONLY
P_5	43.2K	10.8K	54.0K	NORMAL OPERATION
P_6	6600K	1650K	8250K	REFUELING CONDITION
P_6	6040K	1510K	7550K	NORMAL OPERATION
P_7	13.7K	14.1K	27.8K	ALL OPERATING CONDITIONS
P_8	6.1K	1.5K	7.6K	↑
P_8	0	343K	343K	↓

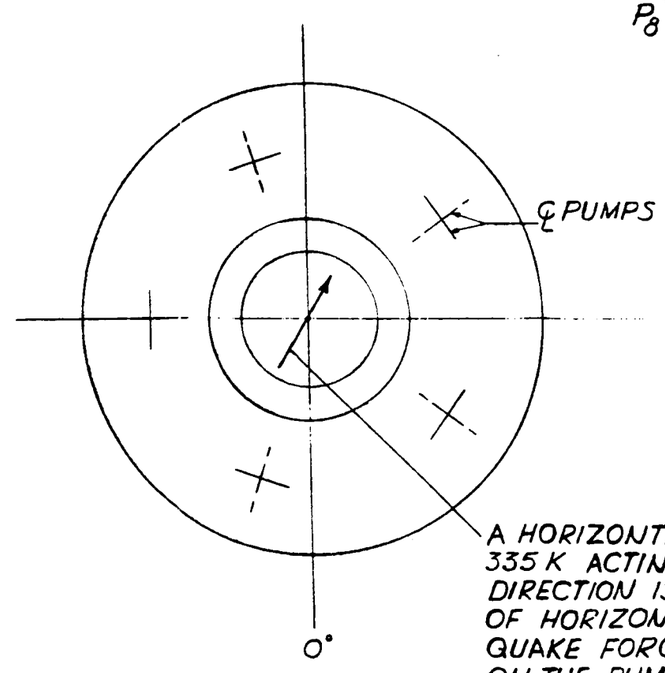

PLAN E-E

A HORIZONTAL FORCE OF 335K ACTING IN ANY DIRECTION IS THE RESULT OF HORIZONTAL EARTHQUAKE FORCES ACTING ON THE PUMPS.

GPU Nuclear — Update - 5

Oyster Creek — 12/90

Static and Seismic Loading on Drywell (Plan C-C, D-D, and E-E)

Fig. 3.8-5

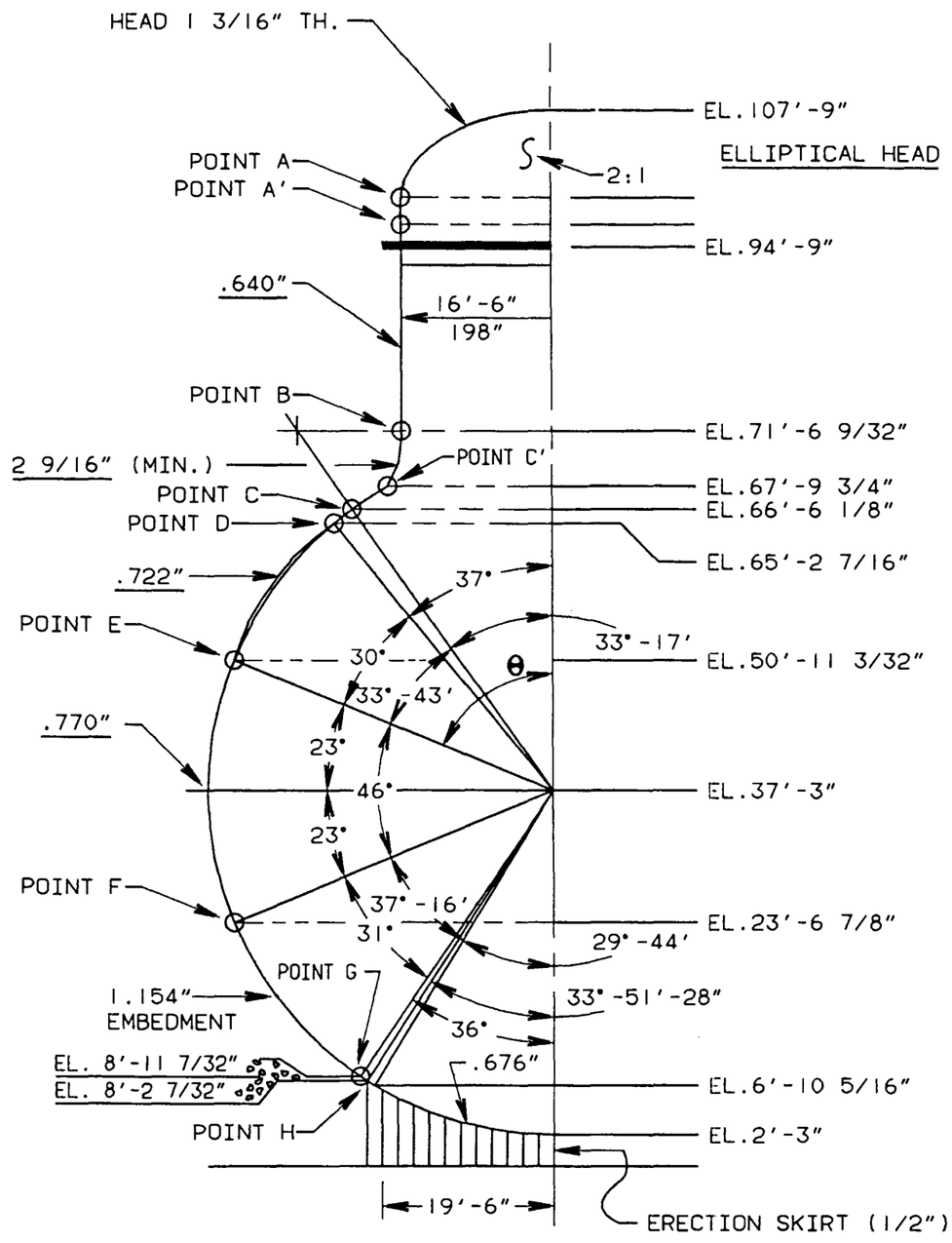

THICKNESSES SHOWN ARE DESIGN THICKNESS.
SEE SECTION 3.8.2.8

GPU Nuclear
Oyster Creek
Drywell Schematic

Update-8
8/93

S38,SKM,00,0572,001-,0001

Fig.3.8-6

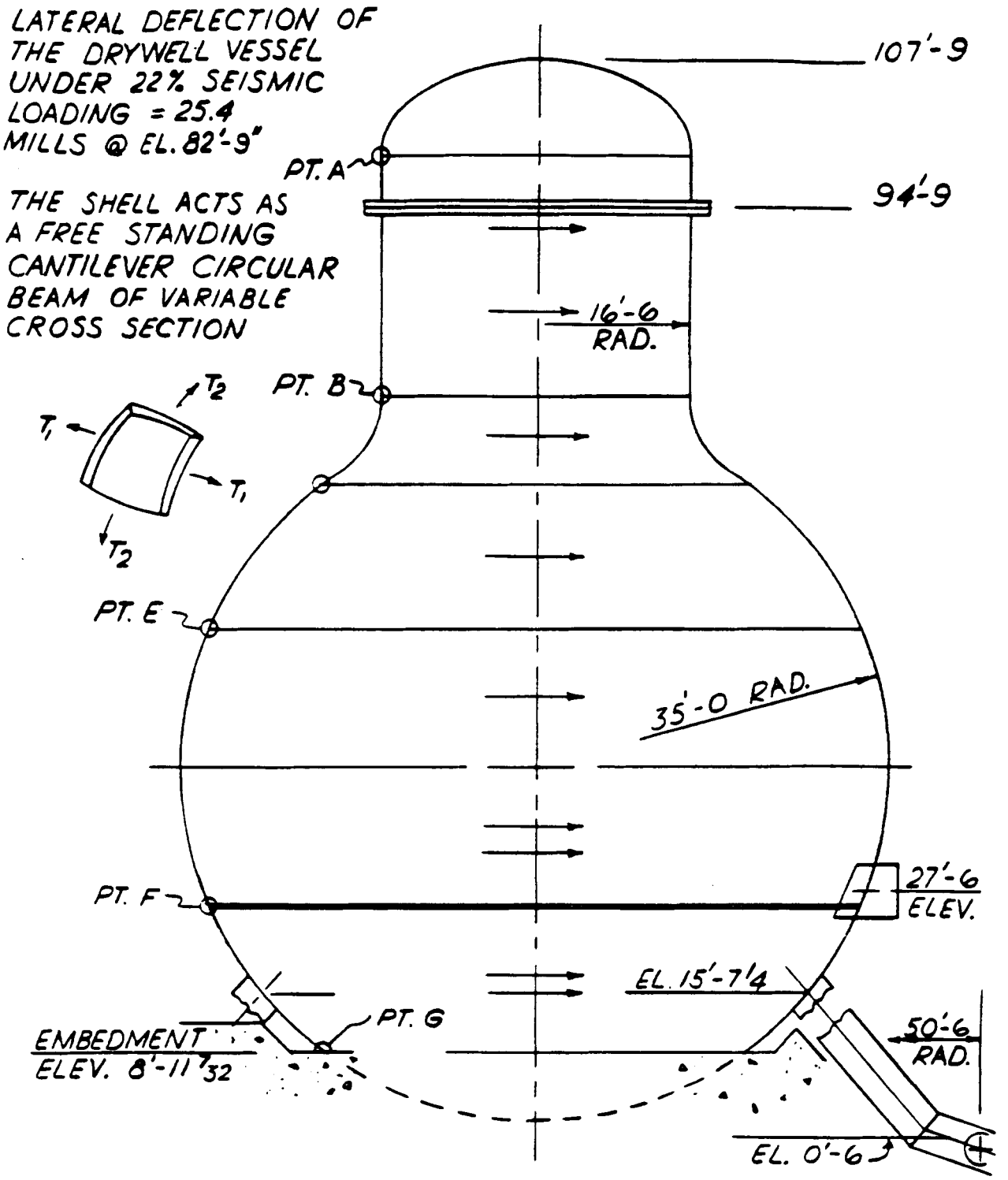

GPU Nuclear

Oyster Creek

Drywell Loading

Update - 5

12/90

Fig. 3.8-7

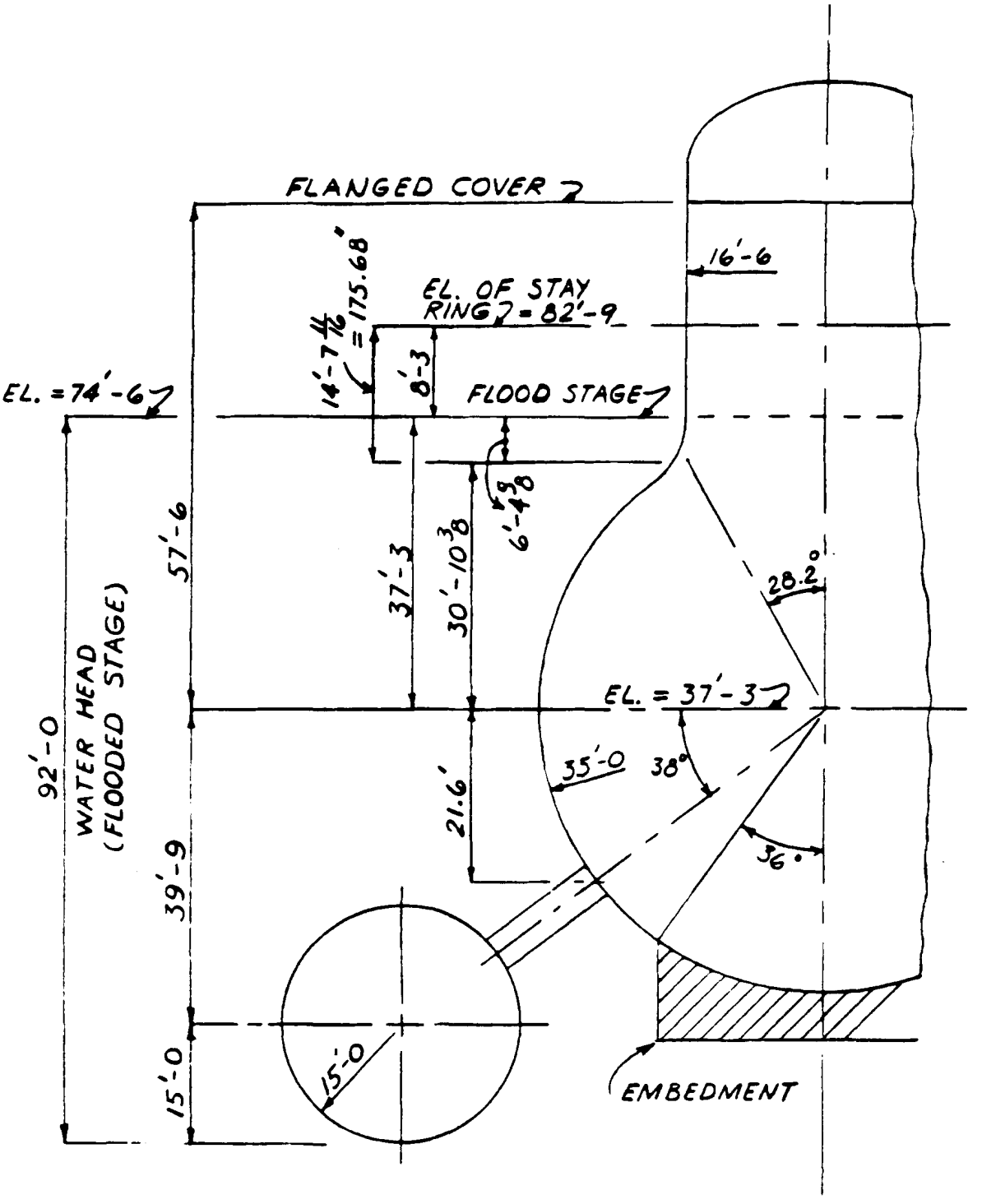

GPU Nuclear	Update - 5
Oyster Creek	12/90
Design Check — Absorption Chamber	
	Fig. 3.8-8

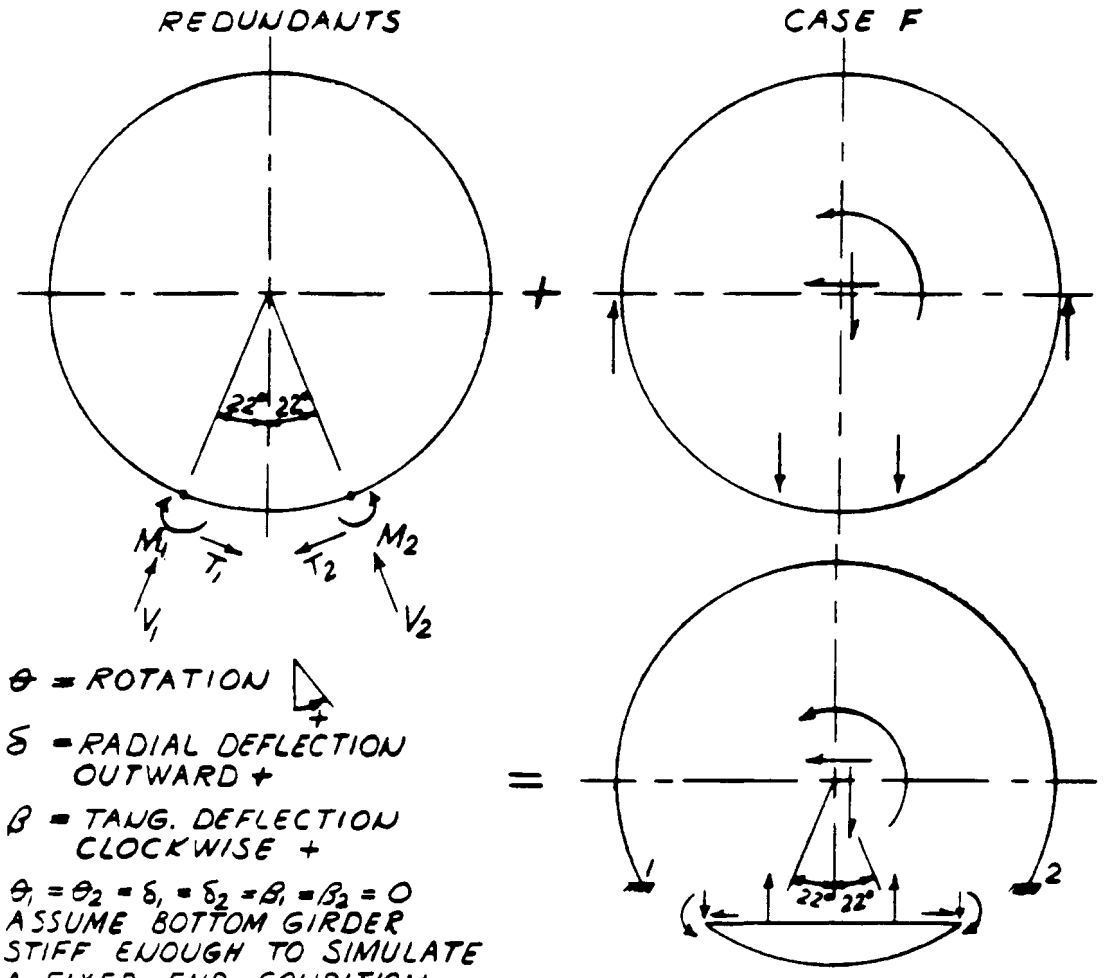

θ = ROTATION

δ = RADIAL DEFLECTION OUTWARD +

β = TANG. DEFLECTION CLOCKWISE +

$\theta_1 = \theta_2 = \delta_1 = \delta_2 = \beta_1 = \beta_2 = 0$
ASSUME BOTTOM GIRDER STIFF ENOUGH TO SIMULATE A FIXED END CONDITION

1. $\theta_1^F + M_1\theta_{11}^m + T_1\theta_{11}^T + V_1\theta_{11}^V + M_2\theta_{12}^m + T_2\theta_{12}^T + V_2\theta_{12}^V = 0$

2. $\delta_1^F + M_1\delta_{11}^m + T_1\delta_{11}^T + V_1\delta_{11}^V + M_2\delta_{12}^m + T_2\delta_{12}^T + V_2\delta_{12}^V = 0$

3. $\beta_1^F + M_1\beta_{11}^m + T_1\beta_{11}^T + V_1\beta_{11}^V + M_2\beta_{12}^m + T_2\beta_{12}^T + V_2\beta_{12}^V = 0$

4. $\theta_2^F + M_1\theta_{21}^m + T_1\theta_{21}^T + V_1\theta_{21}^V + M_2\theta_{22}^m + T_2\theta_{22}^T + V_2\theta_{22}^V = 0$

5. $\delta_2^F + M_1\delta_{21}^m + T_1\delta_{21}^T + V_1\delta_{21}^V + M_2\delta_{22}^m + T_2\delta_{22}^T + V_2\delta_{22}^V = 0$

6. $\beta_2^F + M_1\beta_{21}^m + T_1\beta_{21}^T + V_1\beta_{21}^V + M_2\beta_{22}^m + T_2\beta_{22}^T + V_2\beta_{22}^V = 0$

GPU Nuclear	Update - 5
Oyster Creek	12/90
Absorption Chamber — Torus Analysis	
	Fig. 3.8-9

REFER TO COMPUTER PRINTOUT SHEETS OR INFLUENCE COEFFICIENTS, PAGE 6 → 10

1./ $+3.3398 - .2052\,M_1 - .0334\,T_1 - .0424\,M_2 - .0036\,T_2 + .0598\,V_2 = 0$

2./ $-3.4976 - .0429\,V_1 + .0598\,M_2 + .0188\,T_2 + .00377\,V_2 = 0$

3./ $+.8439 - .0334\,M_1 - .00951\,T_1 - .00361\,M_2 - .000164\,T_2 + .0188\,V_2 = 0$

4./ $-6.1725 + .0424\,M_1 + .0036\,T_1 - .0598\,V_1 + .2052\,M_2 + .0334\,T_2 = 0$

5./ $-1.7138 + .0598\,M_1 + .0188\,T_1 + .00377\,V_1 - .0429\,V_2 = 0$

6./ $-1.8049 + .0036\,M_1 + .000164\,T_1 - .0188\,V_1 + .0334\,M_2 + .00952\,T_2 = 0$

GPU Nuclear	Update - 5
Oyster Creek	12/90
Absorption Chamber — Torus Ring Analysis	
	Fig. 3.8-10

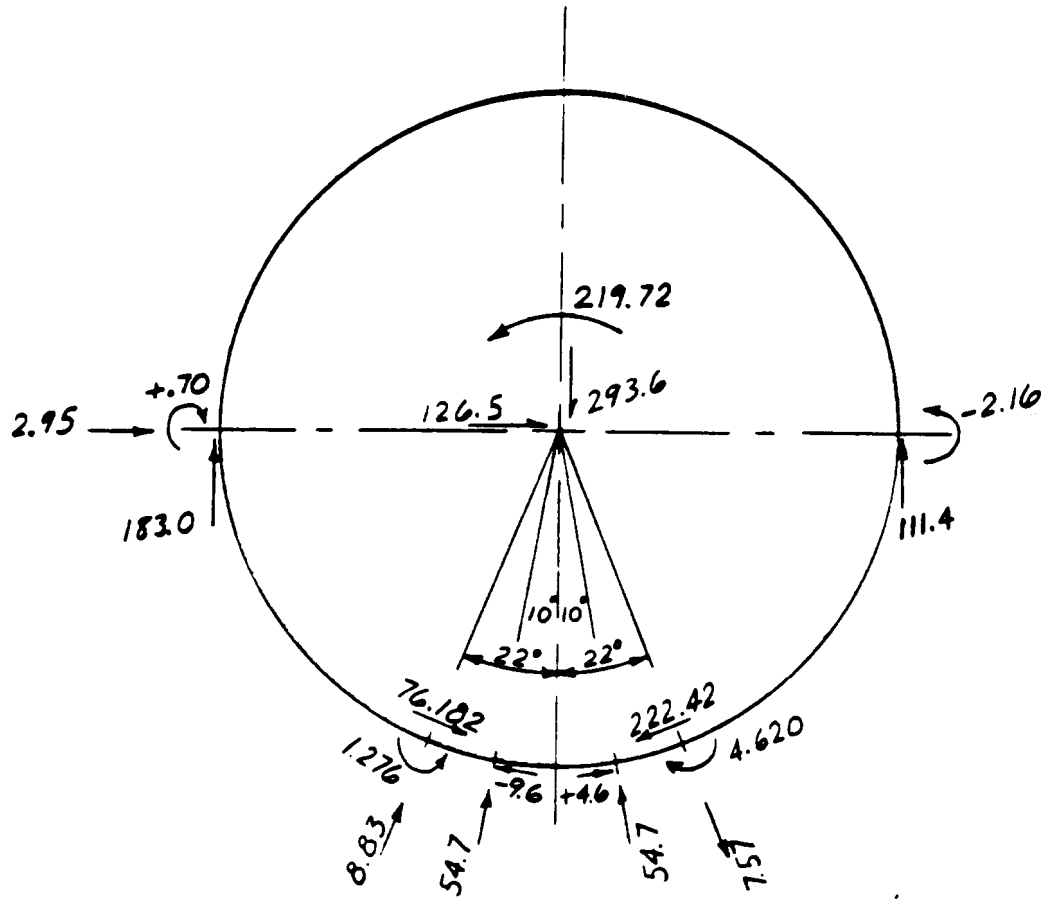

EQUILIBRIUM LOADS

Σ VERTICALS:

$$183.0 + 111.4 + \cos 22^\circ (8.83 - 7.57) - \sin 22^\circ (76.182 + 222.42) + 55.5 + 55.5 = 293.6$$

Σ LONG.

$$2.95 + \sin 22^\circ (8.83 + 7.57) + \cos 22^\circ (76.182 - 222.42) = -126.5$$

RESULTING MOMENT

$$+174 (183.0 - 111.4 + 222.42 - 76.18)$$
$$+174 (+.70 - 2.16 + 4.62 - 1.276) = 174 (219.72)$$

$$\frac{M}{R} = 219.72$$

GPU Nuclear	Update - 5
Oyster Creek	12/90
Absorption Chamber — Torus Ring Analysis	
	Fig. 3.8-11

DEAD LOAD + TORUS FULL OF WATER

$$\frac{PL^3}{3EI} = .406$$

$$P = \frac{3 \times 30 \times 10^6 (.406)(324.3)}{(144)^3}$$

$$= 4000 \text{ LB.}$$

$$\frac{14' - 4.6''}{\cos 9^\circ} = 14' - 6\tfrac{3}{4}$$

$$(55 - 10\tfrac{7}{32}) - (51' - 1'' + 14' - 6\tfrac{3}{4})$$

$$= 2\tfrac{11}{32}$$

$$M_L = 2.344\,(547) = 1285^{\text{IN. K}}$$

$$\frac{M}{R} = 7.35$$

INS. COL. ECC. :

$$(51' - 1) - (14' - 6\tfrac{3}{4}) - (36' - 4\tfrac{3}{32}) = 2\tfrac{5}{32}$$

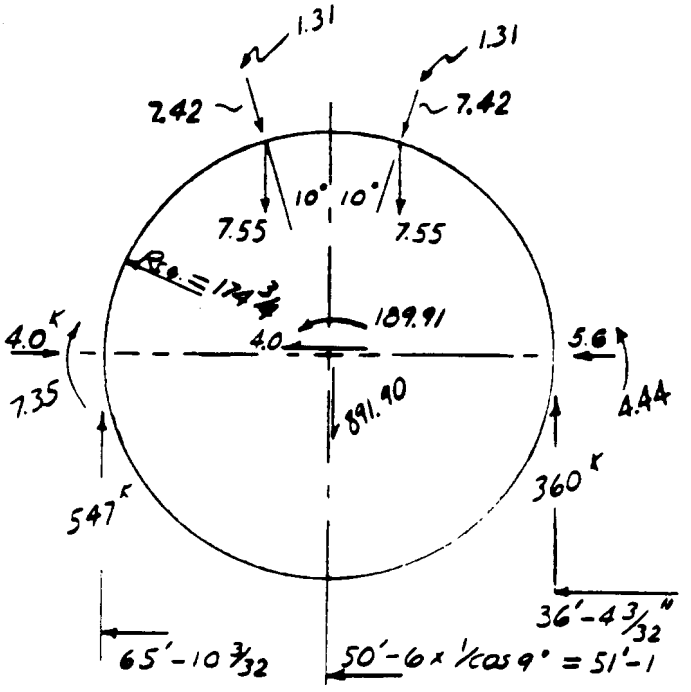

$$M_R = 360\,(2.156) = 776 \text{ IN. K.}\ \circlearrowright,\ \frac{M}{R} = 4.44$$

$$\Sigma M = R\,[547 - 360 + 7.35 - 4.44] = 189.91\,R$$

$$\frac{M}{R} = 189.91$$

GPU Nuclear	Update - 5
Oyster Creek	12/90
Absorption Chamber — Loads on Torus Support Ring	
	Fig. 3.8-12

MAX. MOM. @ 90° (OUTSIDE COL. ATTACHMENT)

$$M = -16{,}978\,(172{,}6) = 2{,}930{,}000 \text{ IN.-LB.}$$

ASSUME (AS PREVIOUSLY), THAT RING FIXED AT 22° & 338°

REFER TO CALCULATIONS ON PAGES ATTACHED TO FIGURES DATED 12/8/64 FOR FIXING RING UNDER JET FORCES.

1./ $-6.0695 - .2052\,M_1 - .0334\,T_1 - .0424\,M_2 - .0036\,T_2 + .0598\,V_2 = 0$

2./ $-1.7997 - .0429\,V_1 + .0598\,M_2 + .0188\,T_2 + .00377\,V_2 = 0$

3./ $-1.4158 - .0334\,M_1 - .00951\,T_1 - .00361\,M_2 - .000164\,T_2 + .0188\,V_2 = 0$

4./ $-.6492 + .0424\,M_1 + .0036\,T_1 - .0598\,V_1 + .2052\,M_2 + .0334\,T_2 = 0$

5./ $+2.4517 + .0598\,M_1 + .0188\,T_1 + .00377\,V_1 - .0429\,V_2 = 0$

6./ $-.8447 + .0036\,M_1 + .000164\,T_1 - .0188\,V_1 + .0334\,M_2 + .00962\,T_2 = 0$

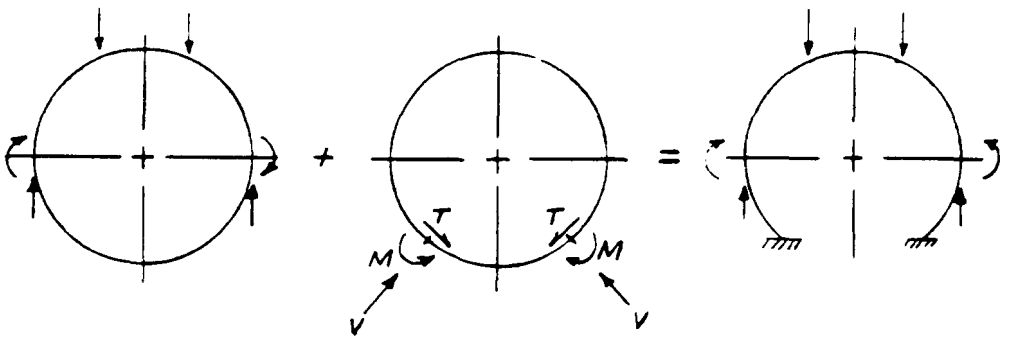

GPU Nuclear	Update - 5
Oyster Creek	12/90
Absorption Chamber — Torus Ring	
	Fig. 3.8-13

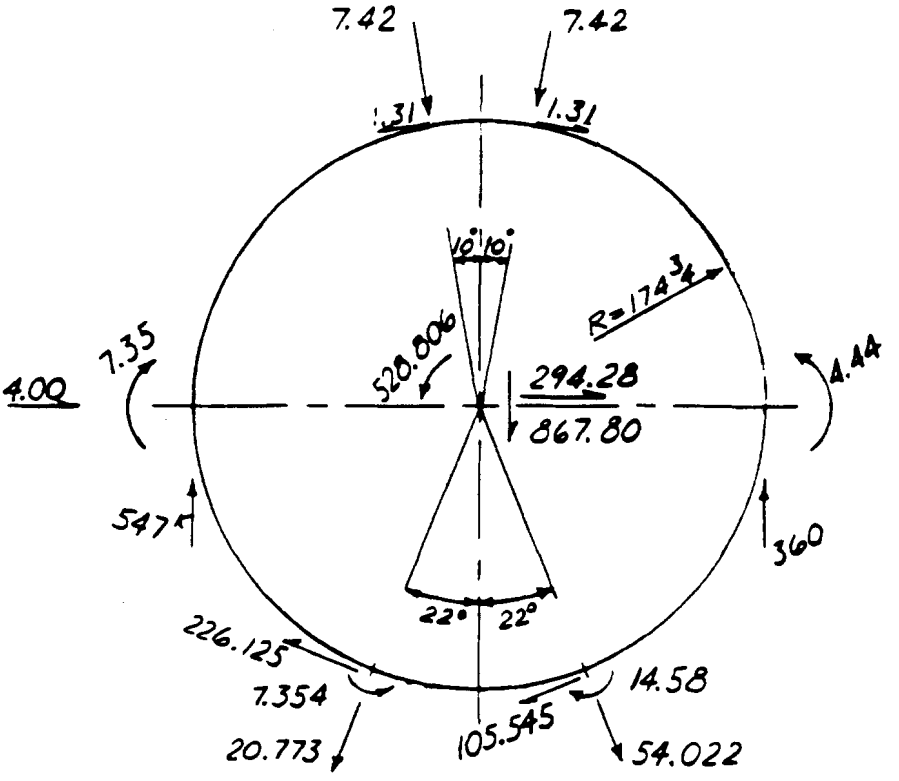

VERT. LOADS:

$$547.0 + 360.0 - 7.55 - 7.55 + (226.125 - 105.545)\sin 22^\circ - (20.773 + 54.022)\cos 22^\circ = 867.80$$

HORZ. LOADS:

$$4.0 - (226.125 + 105.545)\cos 22^\circ + (54.022 - 20.773)\sin 22^\circ = -294.28$$

MOMENTS:

$$M = (547 + 226.125 + 105.545 - 360.0 - 4.44 - 7.354 + 14.58 + 7.35)R \qquad M = 528.806\,R$$

$$\frac{M}{R} = 528.806$$

GPU Nuclear	Update - 5
Oyster Creek	12/90
Absorption Chamber — Final Input Data for Torus Ring	
	Fig. 3.8-14

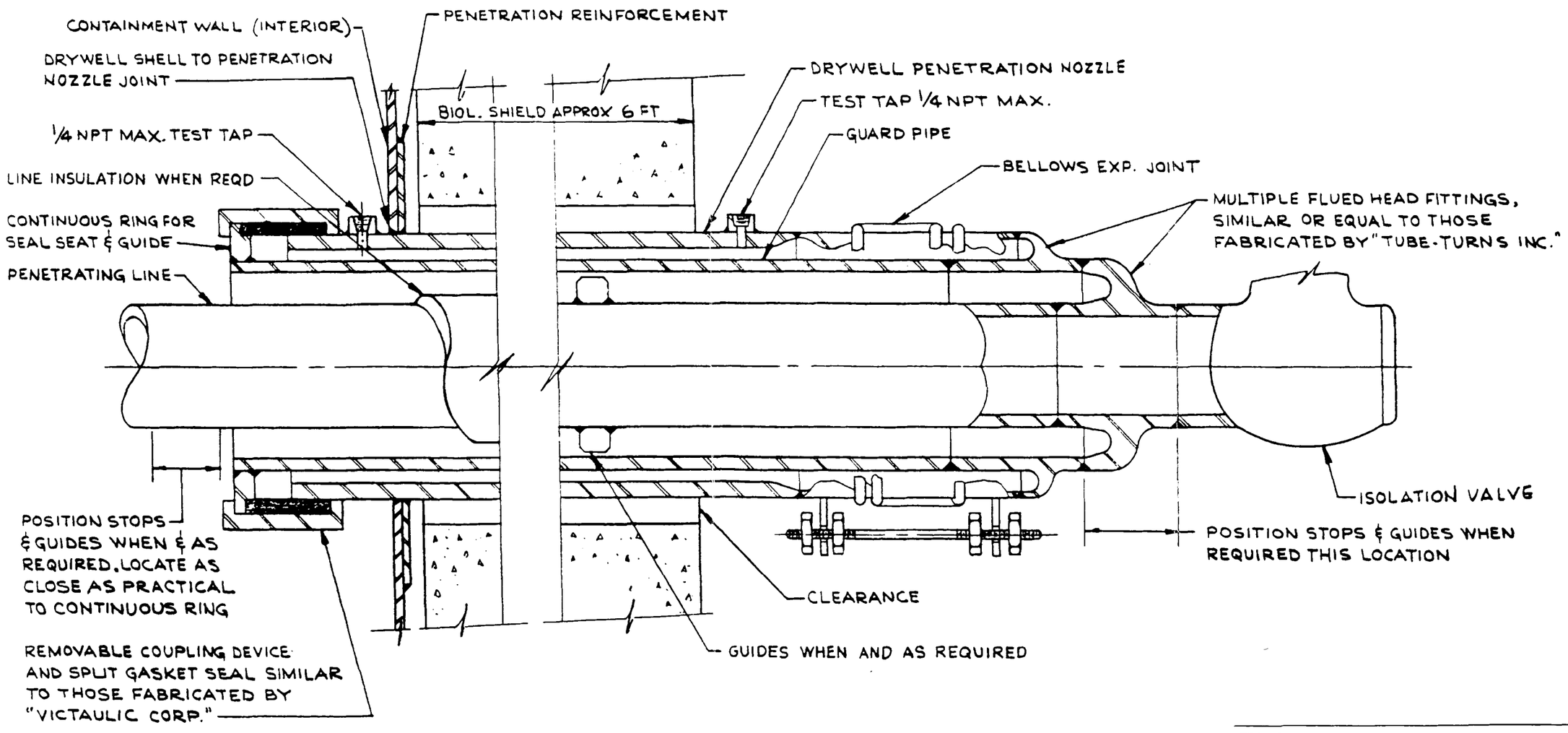

GPU Nuclear	Update - 5
Oyster Creek	12/90
Drywell Penetration — Type 1	
	Fig. 3.8-15

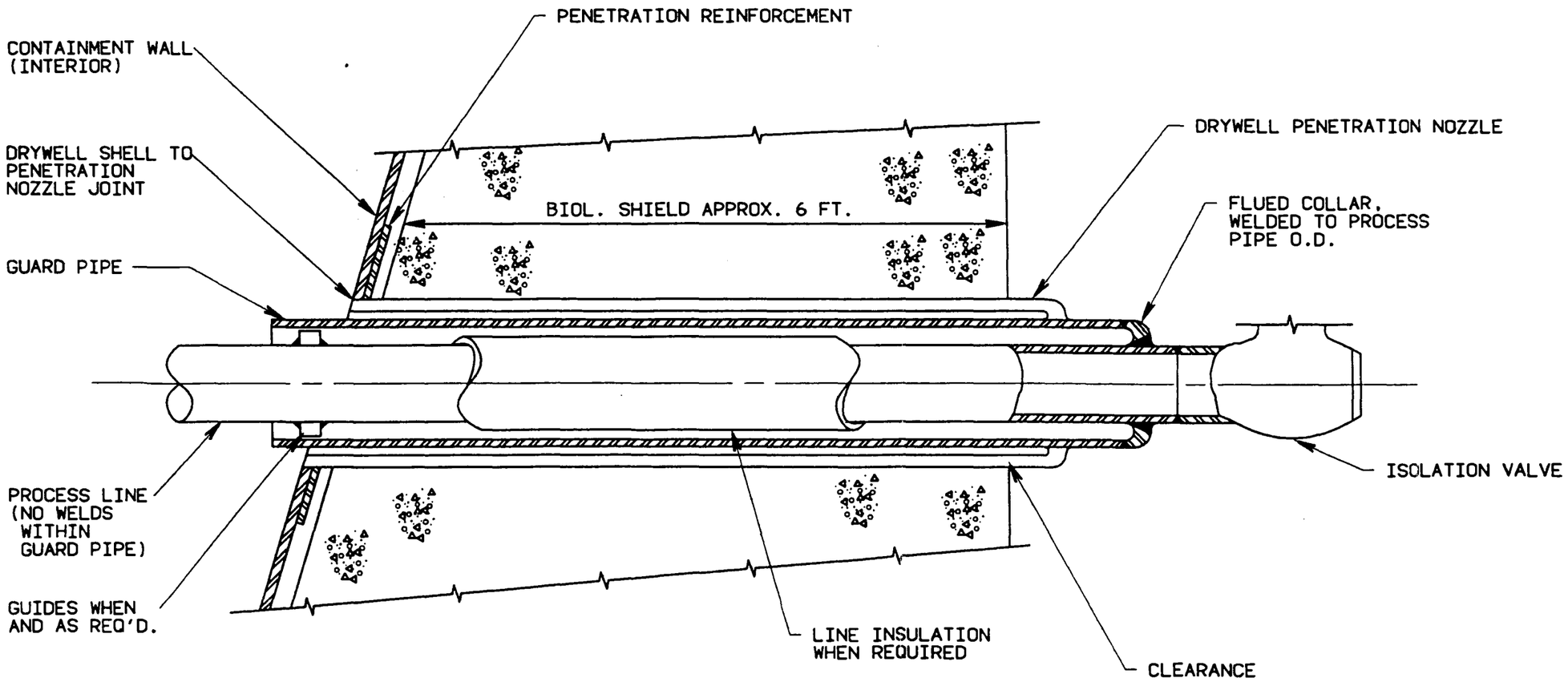

GPU Nuclear
Oyster Creek

Update-6
12/91

Drywell Penetration-Type 2A
Isolation Condenser System

CADD #S3B,SKM,00,0449,001-,1001

Fig.3.8-16A

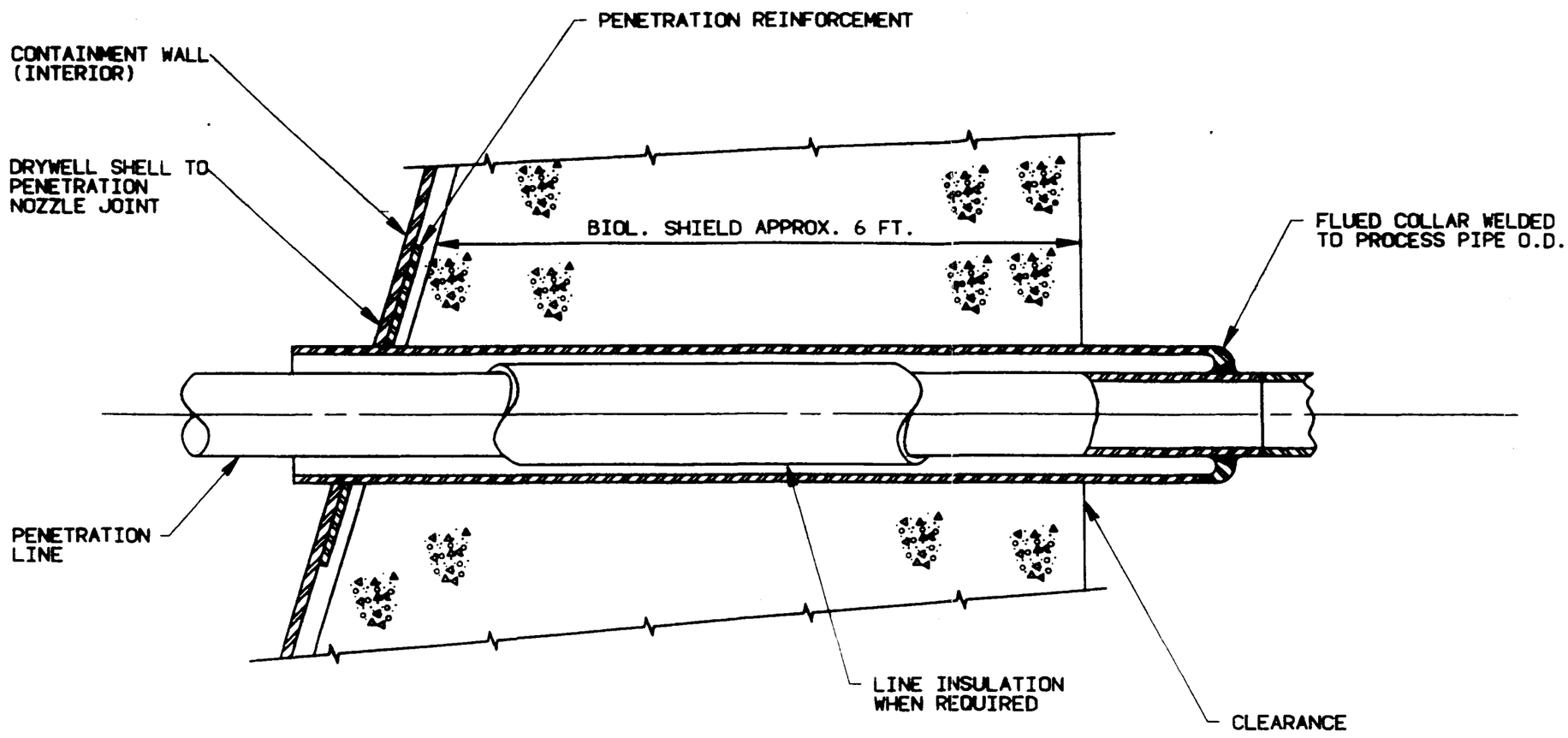

GPU Nuclear

Oyster Creek

Update-6
12/91

Drywell Penetration-Type 2B
Reactor Water Clean-Up System

CADD 6S3B,S01,00,0456,001-,1001

Fig.3.8-16B

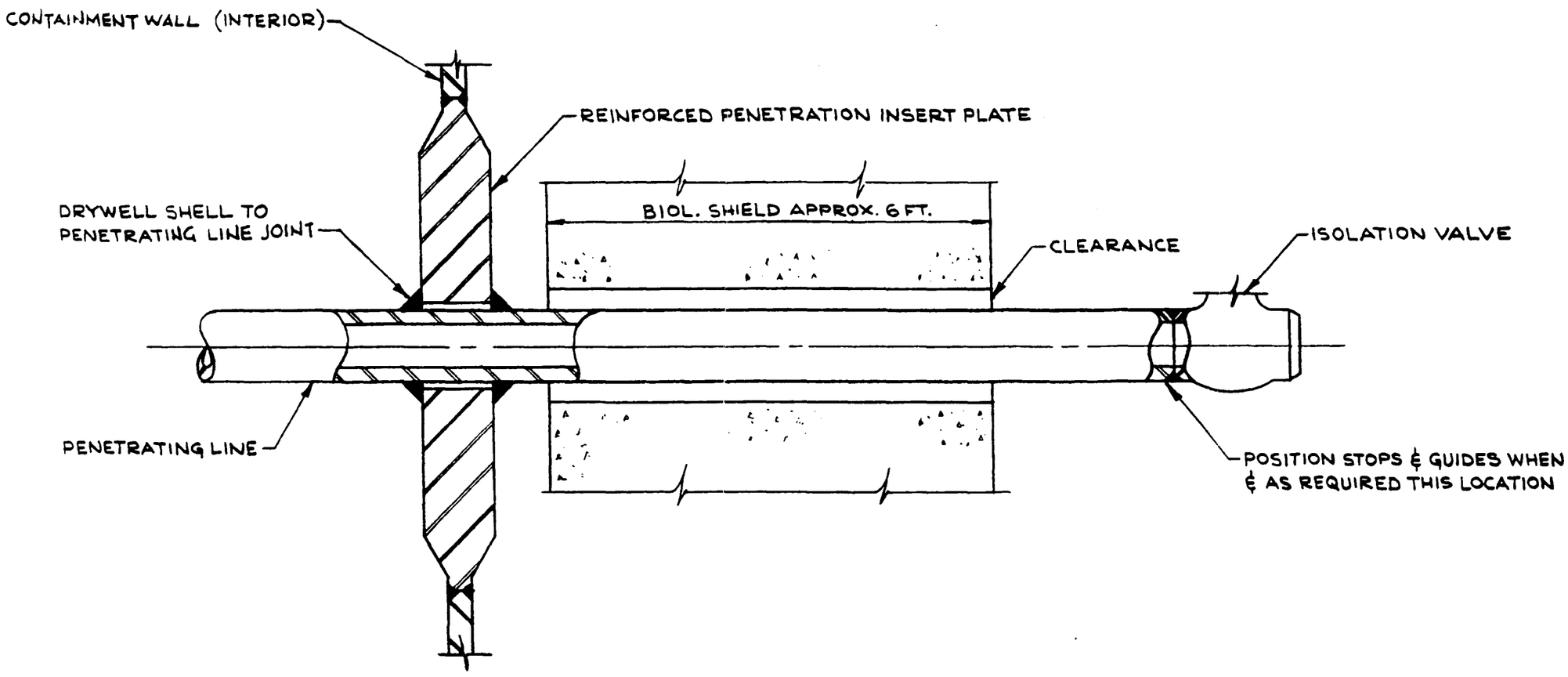

GPU Nuclear

Oyster Creek

Update - 5

12/90

Drywell Penetration — Type 3

Fig. 3.8-17

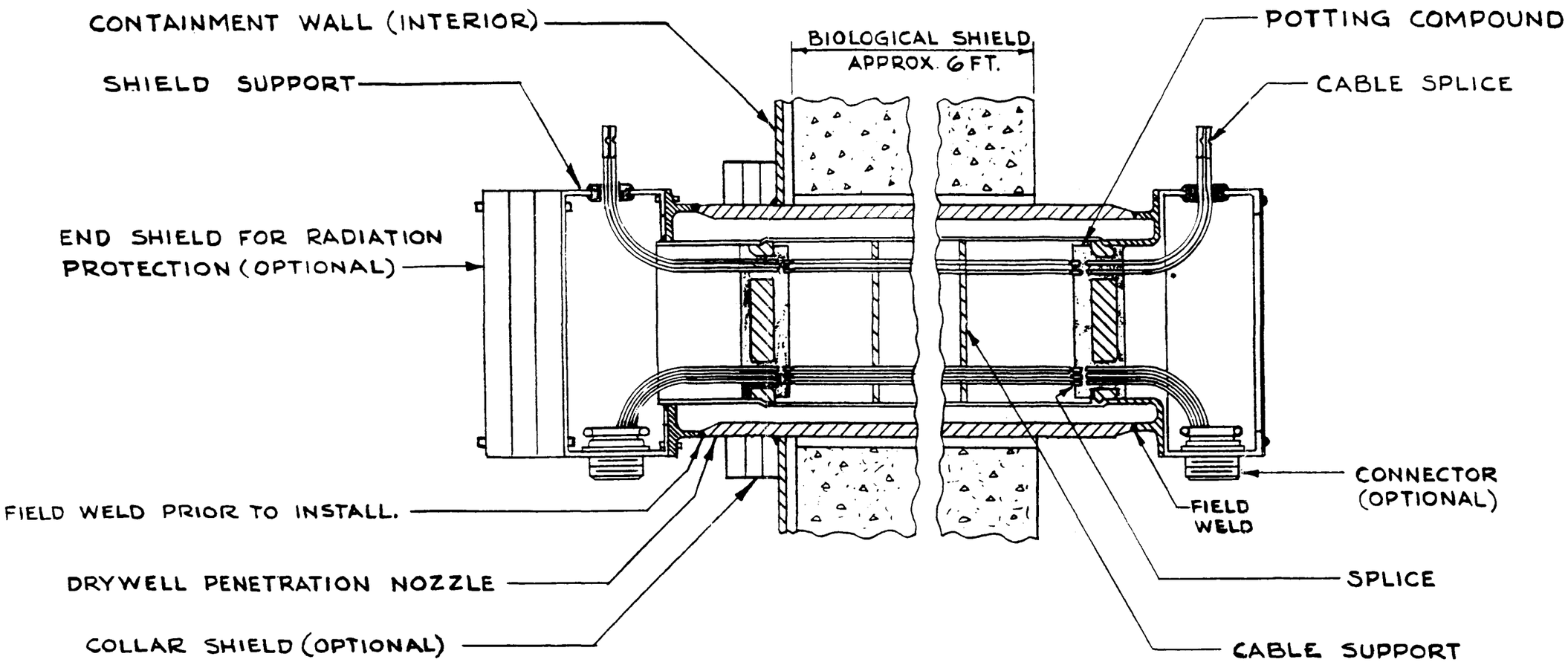

GPU Nuclear

Oyster Creek

Update - 5

12/90

Electrical Penetration Assembly —
Low Voltage Power and Control

Fig. 3.8-18

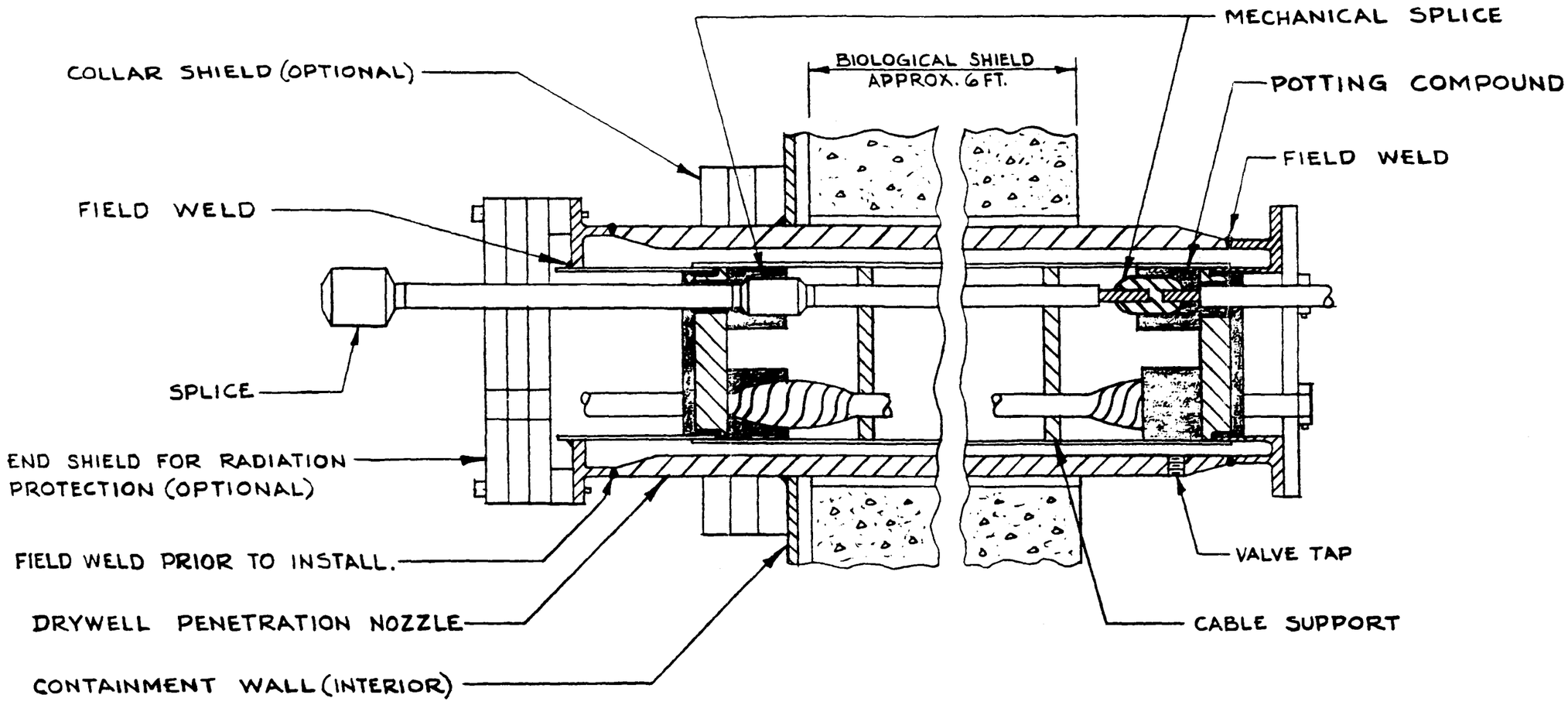

GPU Nuclear

Oyster Creek

Update - 5

12/90

Electrical Penetration Assembly —
High Voltage Power

Fig. 3.8-19

LIST OF DRAWINGS FOR 2'-6" PERSONNEL LOCK					
DWG.	DESCRIPTION	DWG.	DESCRIPTION	DWG.	DESCRIPTION
10	GENERAL ARRANGEMENT	PCT-1-111	INTERIOR DOOR ASSY	PCT-1-117	CONTROL BOX ASSY
9	LOCK STRUCTURAL ASS'Y	PCT-1-112	HINGE DETAILS	PCT-1-118	BRACKET ASSEMBLY
8	INTERIOR DRIVE BOX ASS'Y	PCT-1-113	ANT & ETY BOX ASSY	PLT-1-119	BRACKET ASSEMBLY
8	EXTERIOR DRIVE BOX ASS'Y	PCT-1-114	INSPECTION PLG	PCT-1-120	BRACKET ASSEMBLY
PLT-1-104	INTERIOR DRIVE BOX ASS'Y	PCT-1-115	INDICATOR BOX ASSY	PCT-1-121	LIMIT SWITCH DETAILS
PLT-1-105	EXTERIOR DRIVE BOX ASS'Y	PCT-1-116	INTERIOR BOX DETAILS	123	HINGE ASSEMBLY
PCT-1-106	LOCK & VALVE SERVICE PLG	PCT-1-117	EXTERIOR BOX DETAILS	124	HINGE TRIM ASSEMBLY
PLT-1-107	DOOR SERVICE PLG	PCT-1-118	INDICATOR PLG	125	DOOR DETAILS
PLT-1-108	LOCK & DOOR PLG	PCT-1-119	HINGE DETAILS	126	DOOR SWING DETAILS
PLT-1-109	SHAFTS	PCT-1-120	HINGE SUPPORT DETS	127	MOUNTING BRACKETS
PLT-1-110	SERVICE PL ASSY'S	PCT-1-121	TRANSFER DRIVE ASSY	128	DOOR SWING & LATCH ASSY
PLT-1-111	OPERATING BOX ASSY	PCT-1-122	TRUNNION BOX ASSY	138	FLOOR ASSEMBLY
PLT-1-112	HANDWHEEL	PLT-1-123	VALVE ASSEMBLY	147	MOUNTING PADS
				148	STRUCTURAL DETAILS
				149	STRUCTURAL DETAILS

GENERAL NOTES

THE LOCKING MECHANISM IS DESIGNED TO SEAL THE DOOR AGAINST A PRESSURE OF 140 PSIG. THE DOORS AND LOCK ARE DESIGNED FOR THE 61 PSIG PRESSURE OF THE CONTAINMENT VESSEL EXIST ING IN THE CONTAINMENT VESSEL OR IN THE CONTAINMENT VESSEL AND LOCK SIMULTANEOUSLY. EACH DOOR CAN BE MANUALLY OPERATED FROM EITHER SIDE OF THE DOOR. DOORS AND VALVES ARE MECHANICALLY INTERLOCKED IN ORDER THAT BOTH DOORS OR VALVES CAN NOT BE OPEN AT THE SAME TIME. ONE DOOR OR VALVE CANNOT BE OPENED UNLESS THE OPPOSITE DOOR OR VALVE IS SEALED.
OPERATION OF THE HANDWHEEL WILL OPERATE THE MECHANICAL INTERLOCK TO PREVENT OPENING OPPOSITE DOOR AND VALVE. OPEN PRESSURE EQUALIZING VALVE UNLOCK DOOR AND SWING DOOR OPEN ON ITS HINGE. THESE OPERATIONS ARE IN THE SEQUENCE AS DESCRIBED FOR OPENING A DOOR AND ARE REVERSED FOR CLOSING THE DOOR.
THE DOORS & LOCK ARE ALSO DESIGNED FOR A VACUUM OF 2 PSIG UNDER THE LOCK WITH THE VESSEL AT ATMOSPHERIC PRESSURE.

HANDWHEEL ROTATION	OPERATION	HANDLE STROKE
8 1/2 TURNS	VALVE OPEN	6.55
1 1/2 - 1 1/2 TURNS	DOOR UNLOCK	4.35
1 1/2 - 1 1/2 TURNS	DOOR OPEN	1.00

LIST OF MATERIAL		
[illegible]	[illegible]	[illegible]
[illegible]	[illegible]	[illegible]
[illegible]	[illegible]	[illegible]

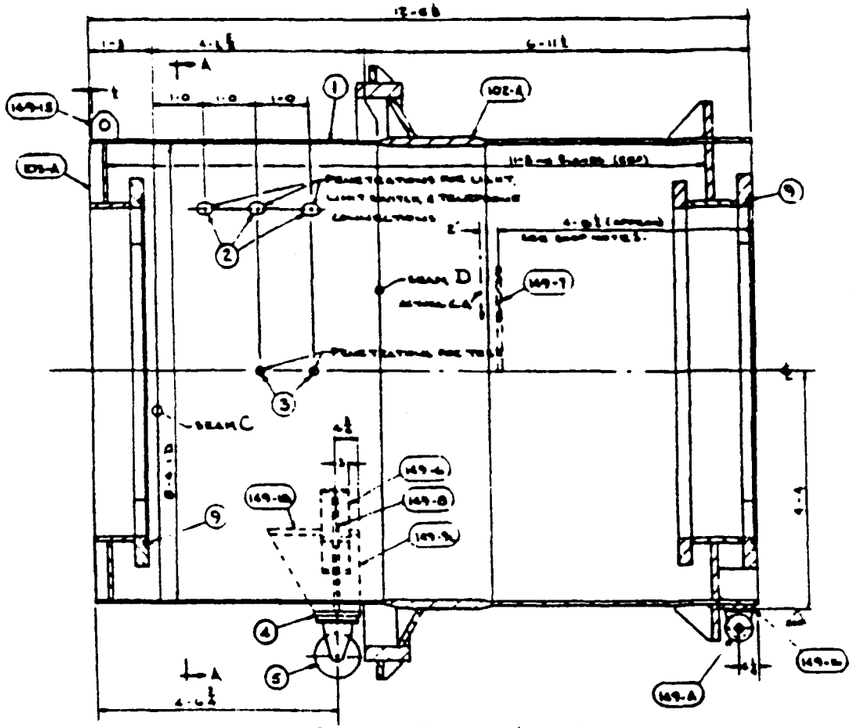

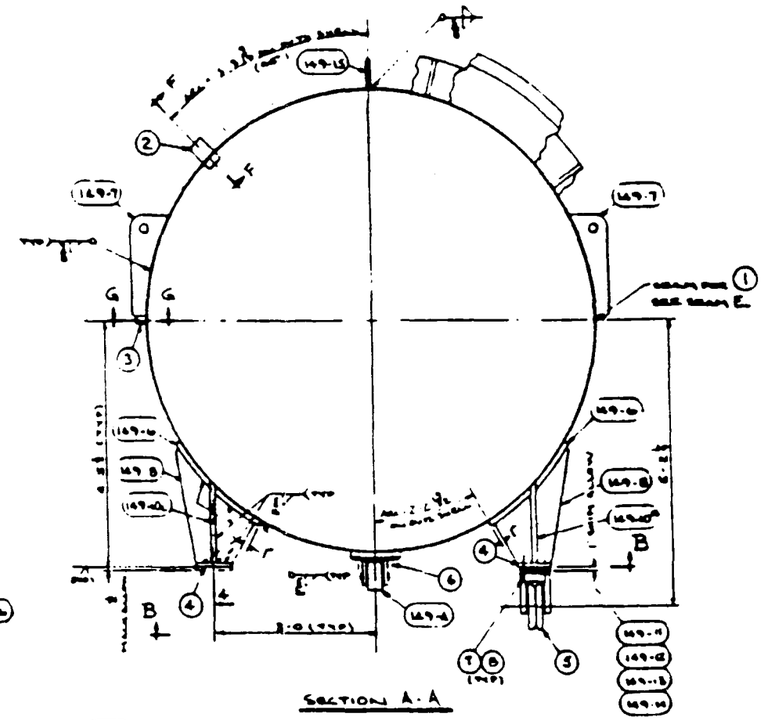

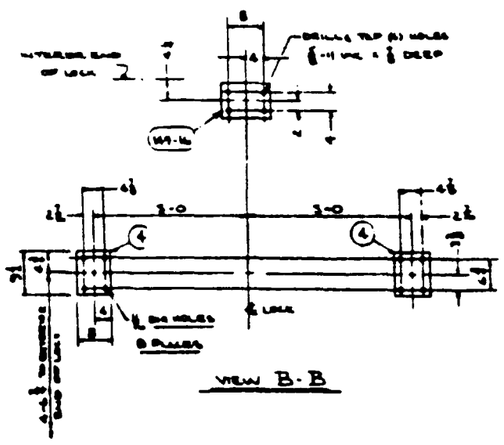

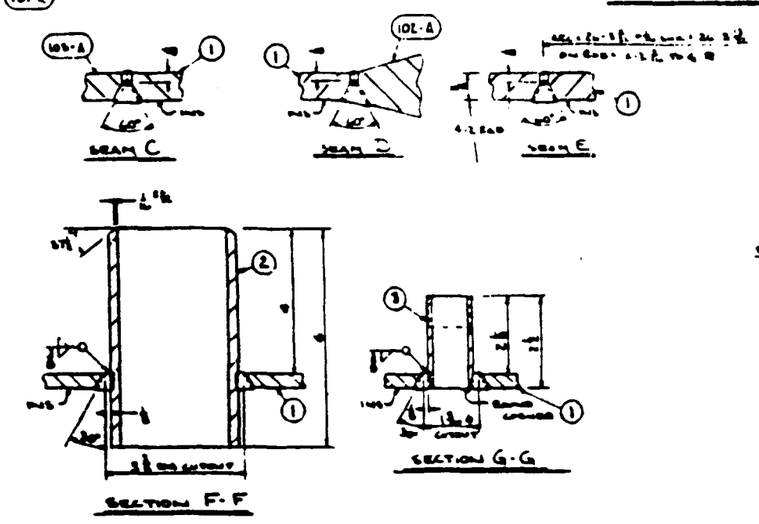

SD	MARK	AD	DESCRIPTION			MATL
	101-A		[illegible]			
	102-A	1	[illegible]			
	103-A	1	[illegible]			
	101-1	1	[illegible]	24	[illegible]	[illegible]
	101-2	3	[illegible]	0	6	A36-0
	101-3	2	[illegible]	0	23	[illegible]
	101-4	2	[illegible]	0	[illegible]	A36-0
	101-5	2	[illegible]			[illegible]
			[illegible]			
	101-6	4	[illegible]	0	[illegible]	A36
	101-7	8	[illegible]	0	[illegible]	[illegible]
	101-8	8	[illegible]			A307
	101-9	2	[illegible]			
			[illegible]			
			[illegible]			
	149-6	2	[illegible]	2	[illegible]	[illegible]
	149-7	2	[illegible]			[illegible]
	149-8	2	[illegible]			[illegible]
	149-9	2	[illegible]		[illegible]	[illegible]
	149-10	2	[illegible]			[illegible]
	149-11	2	[illegible]	0	7	A588-C
	149-12	2	[illegible]	0	7	[illegible]
	149-13	2	[illegible]	0	7	[illegible]
	149-14	4	[illegible]	0	7	[illegible]
	149-15	1	[illegible]	0	6	[illegible]
	149-A	1	[illegible]			
	149-17	2	[illegible]			A588-C
	149-18	1	[illegible]	0	0	[illegible]
	149-19	2	[illegible]	0	[illegible]	[illegible]
	149-20	1	[illegible]			[illegible]
	149-21	1	[illegible]	0	[illegible]	[illegible]
2	149-11		[illegible]	0	7	A588-C
2	149-12		[illegible]	0	7	[illegible]
2	149-13		[illegible]	0	7	[illegible]

[illegible] AZ:2 [illegible] TO A588 MOD'D ED

SHOP NOTE

1. DO NOT ATTACH LIFTING LUGS 149-7 UNTIL [illegible] COMPONENTS ARE ASSEMBLED TO 101-A, PERSONNEL LOCK ASSY.
SHOP DETERMINE LOCATION OF ACTUAL CENTER OF ALIGNMENT OF BEAM 101-A, THEN LOCATE LUGS 149-7 2" TOWARD THE INTERIOR END OF THE LOCK FROM THE ACTUAL C.L.
NOTIFY ENGINEERING OF ACTUAL LOCATION OF LUGS 149-7.

GENERAL NOTES

1. PREHEAT AT 200°F [illegible] ALL SEAMS WHERE THICKNESS EXCEEDS 1½" PREHEAT TO 300°F FOR ALL SEAM THICKNESS. [illegible] TO BE LESS THAN 1½" WHEN AMBIENT TEMPERATURE IS LOWER THAN 60°F.
2. ALL BUTT WELDS ARE TO BE 100% X-RAYED
3. INDICATING ALL WELDS WHICH ARE NOT X-RAYED
4. SHOP USE E7018 ELECTRODE. SEE NOTE ON GENERAL PLAN.

GPU Nuclear

Oyster Creek

2-6 and 6-0 Personnel Lock —
Lock Structural Assembly

Update - 5
12/90

Fig. 3.8-21

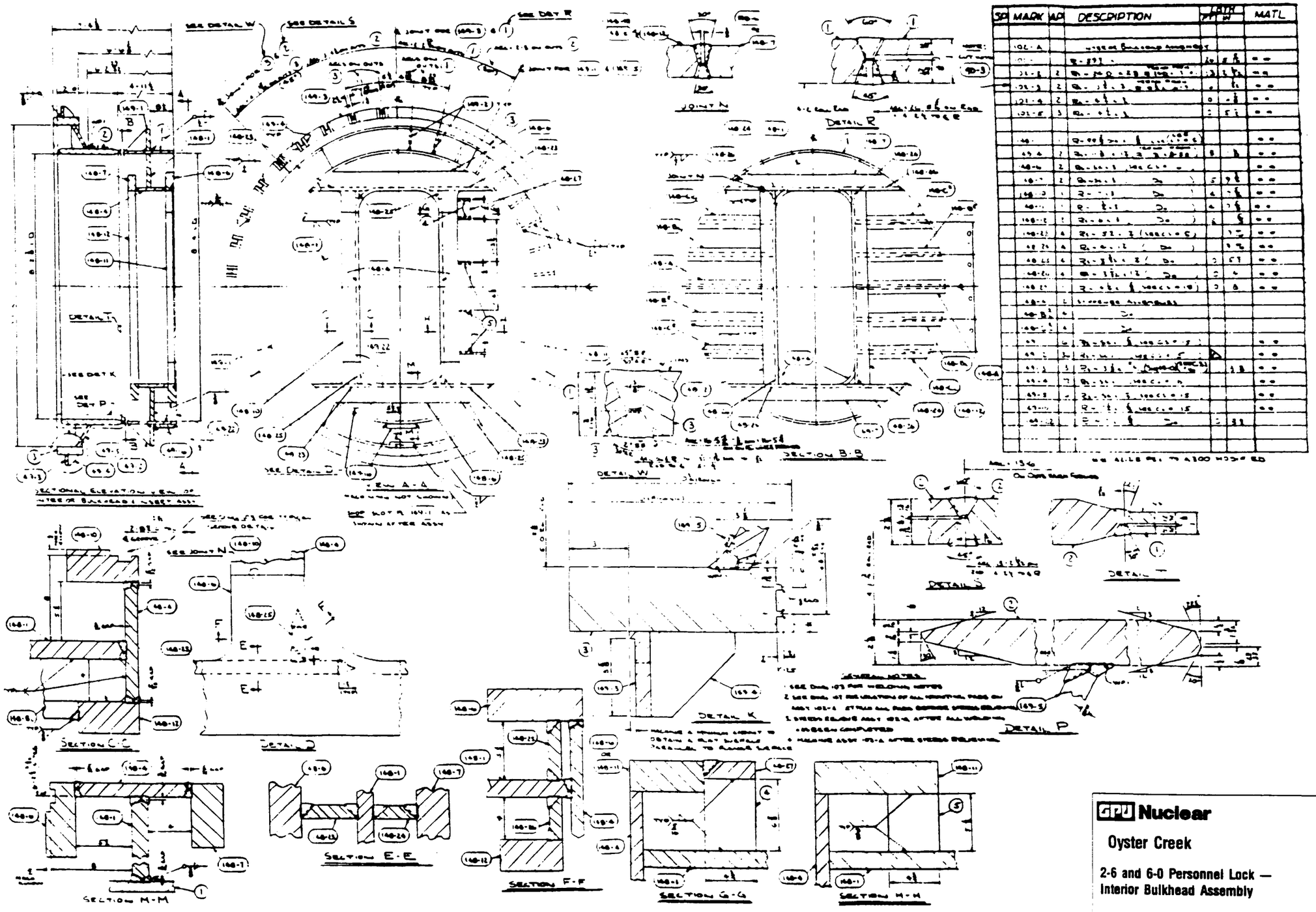

SQ	MARK	NO	DESCRIPTION	LGTH		MATL

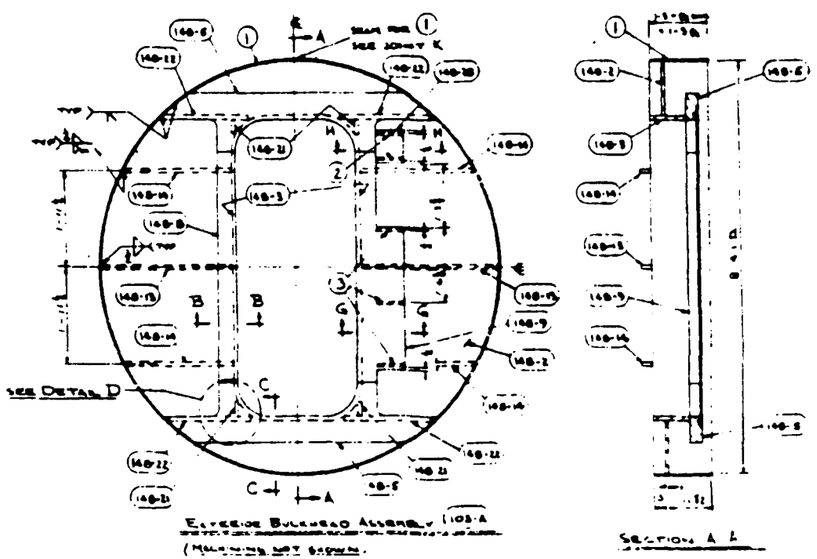

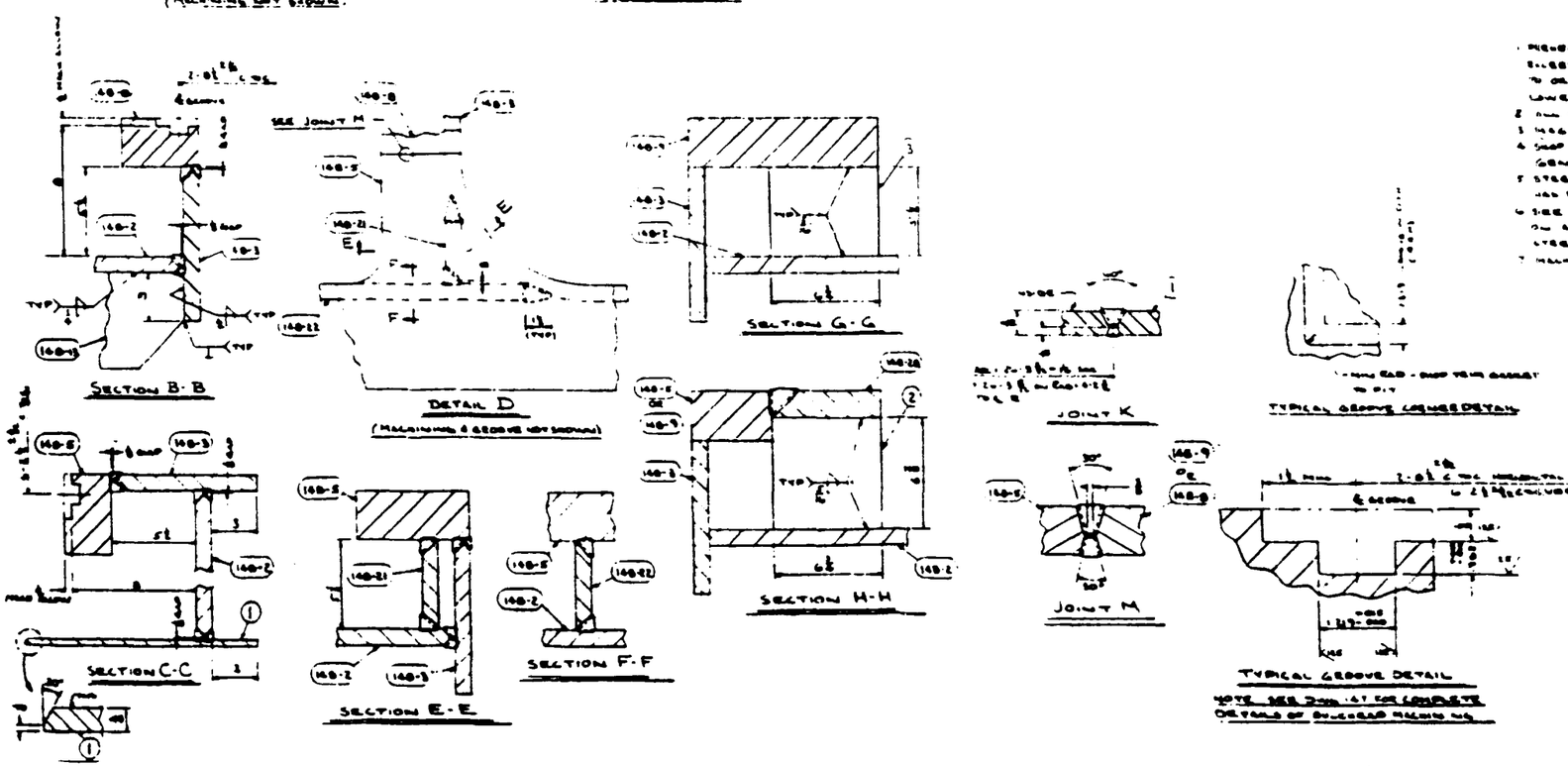

GENERAL NOTES

GPU Nuclear

Oyster Creek

2-6 and 6-0 Personnel Lock — Exterior Bulkhead Assembly

Update - 5

12/90

Fig. 3.8-23

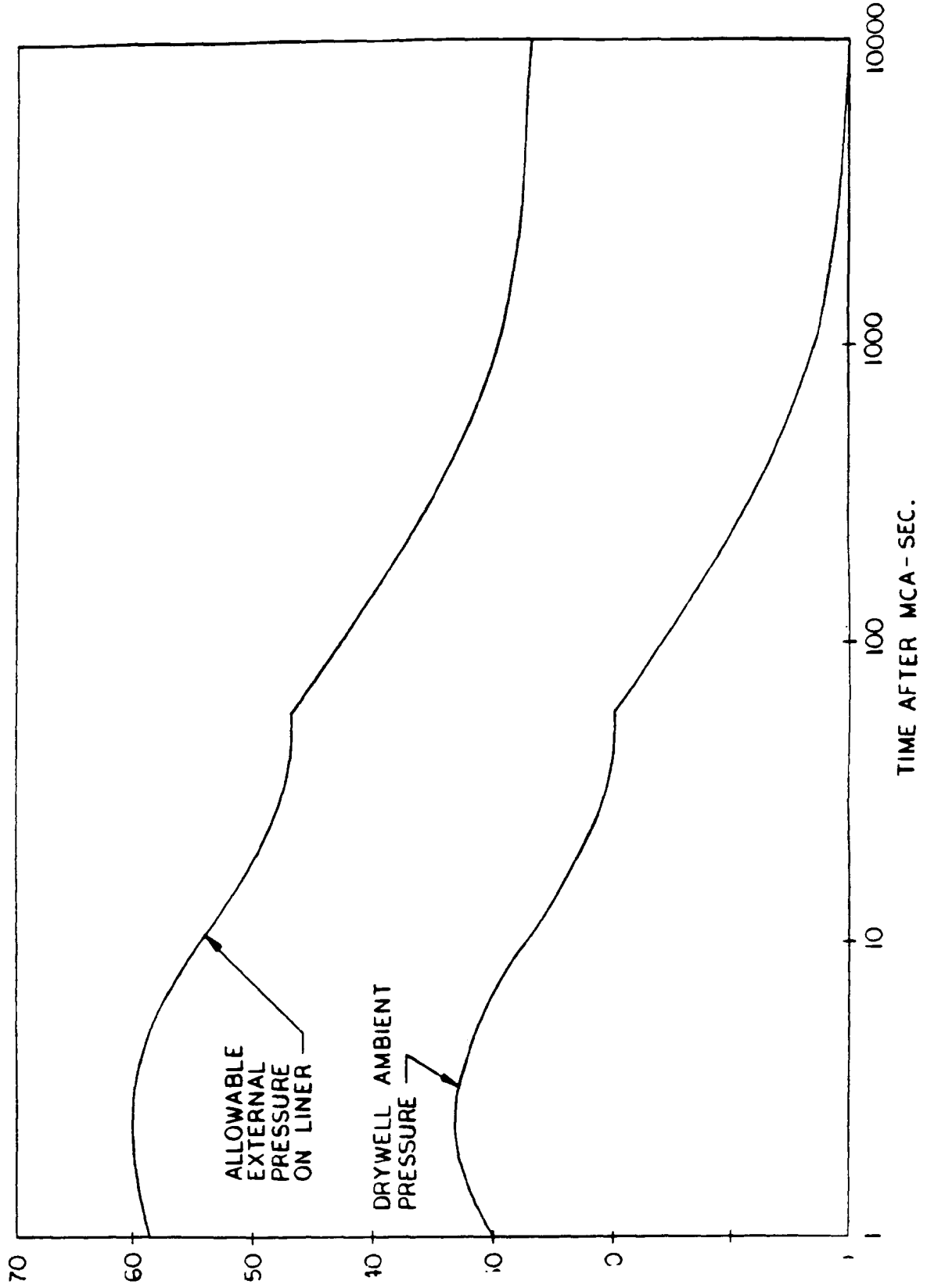

GPU Nuclear

Oyster Creek

Update - 5

12/90

Allowable External Pressure on Liner

Fig. 3.8-24A

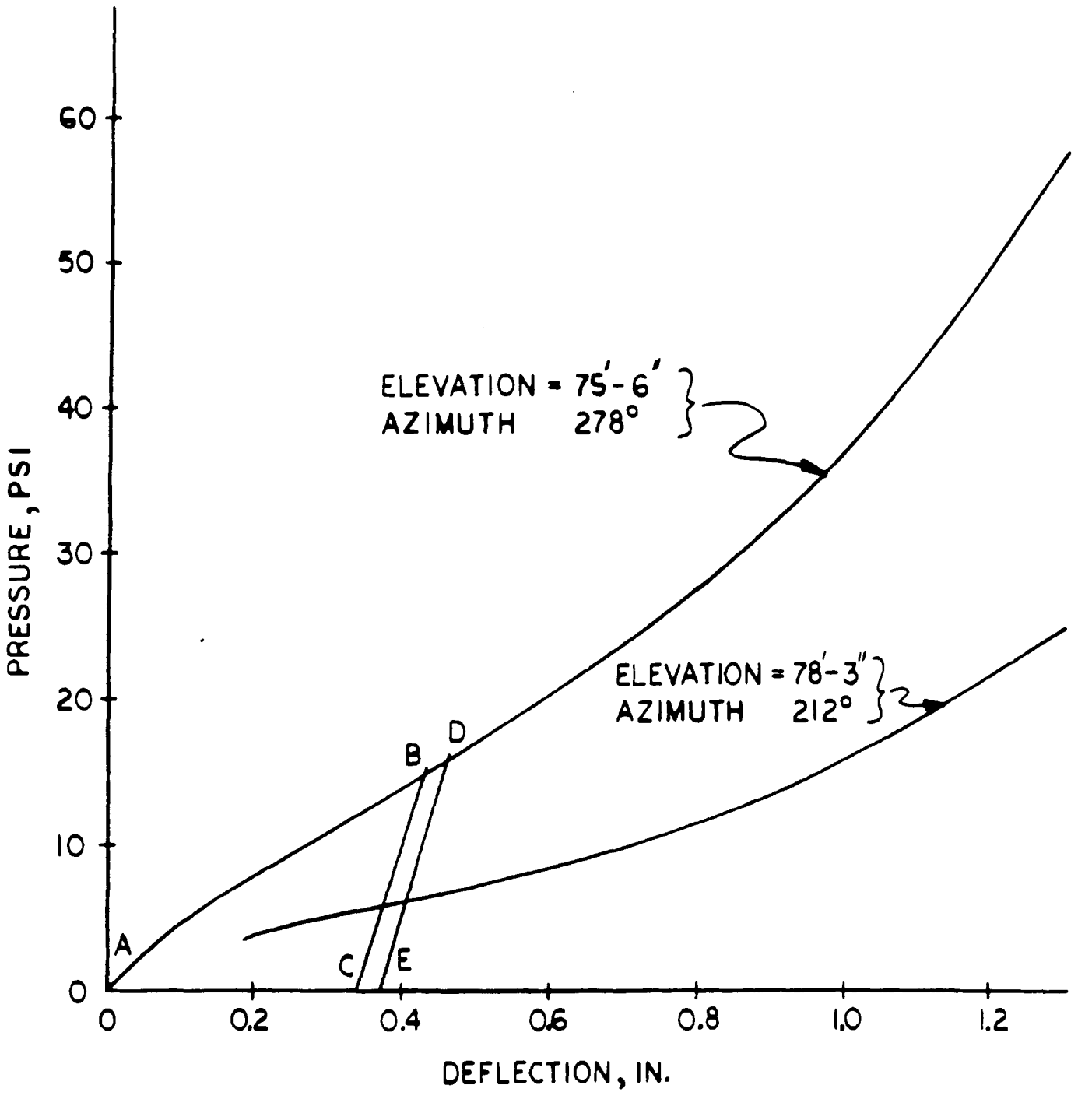

GPU Nuclear

Oyster Creek

Update - 5

12/90

Pressure vs. Deflection for Off Wall Sample — Firebar D

Fig. 3.8-24B

POINTS	ELEV.	AZ
1	36'	125°
2	27'	38°
3	44'	290°
4	27'	171°
5	62'	340°
6	62'	240°
7	86'	190° (CYL)

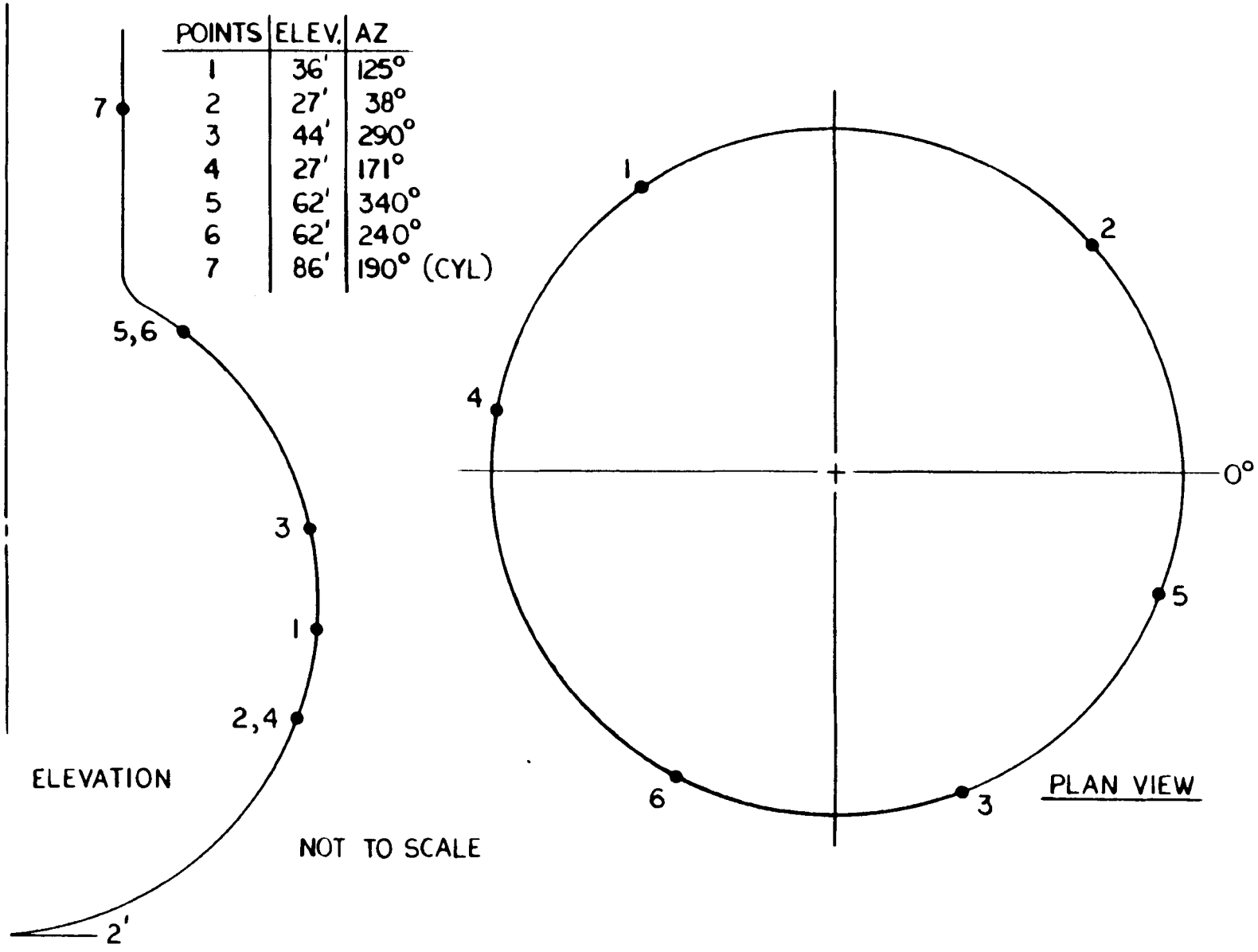

GPU Nuclear

Oyster Creek

Locations at Which Liner Displacement Was Measured

Update - 5

12/90

Fig. 3.8-24C

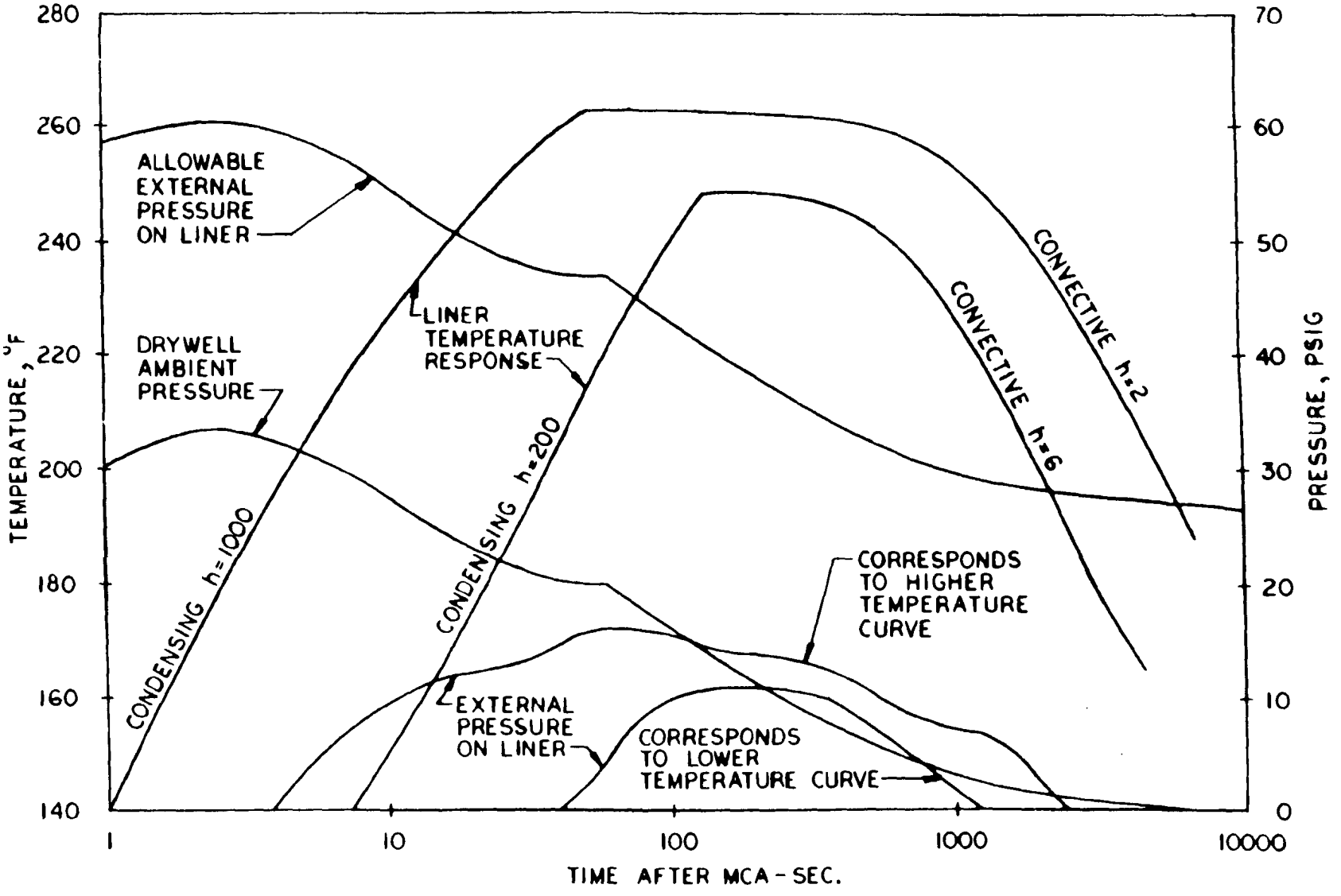

GPU Nuclear

Oyster Creek

Update - 5

12/90

Liner External Pressure and Temperature After MCA

Fig. 3.8-24D

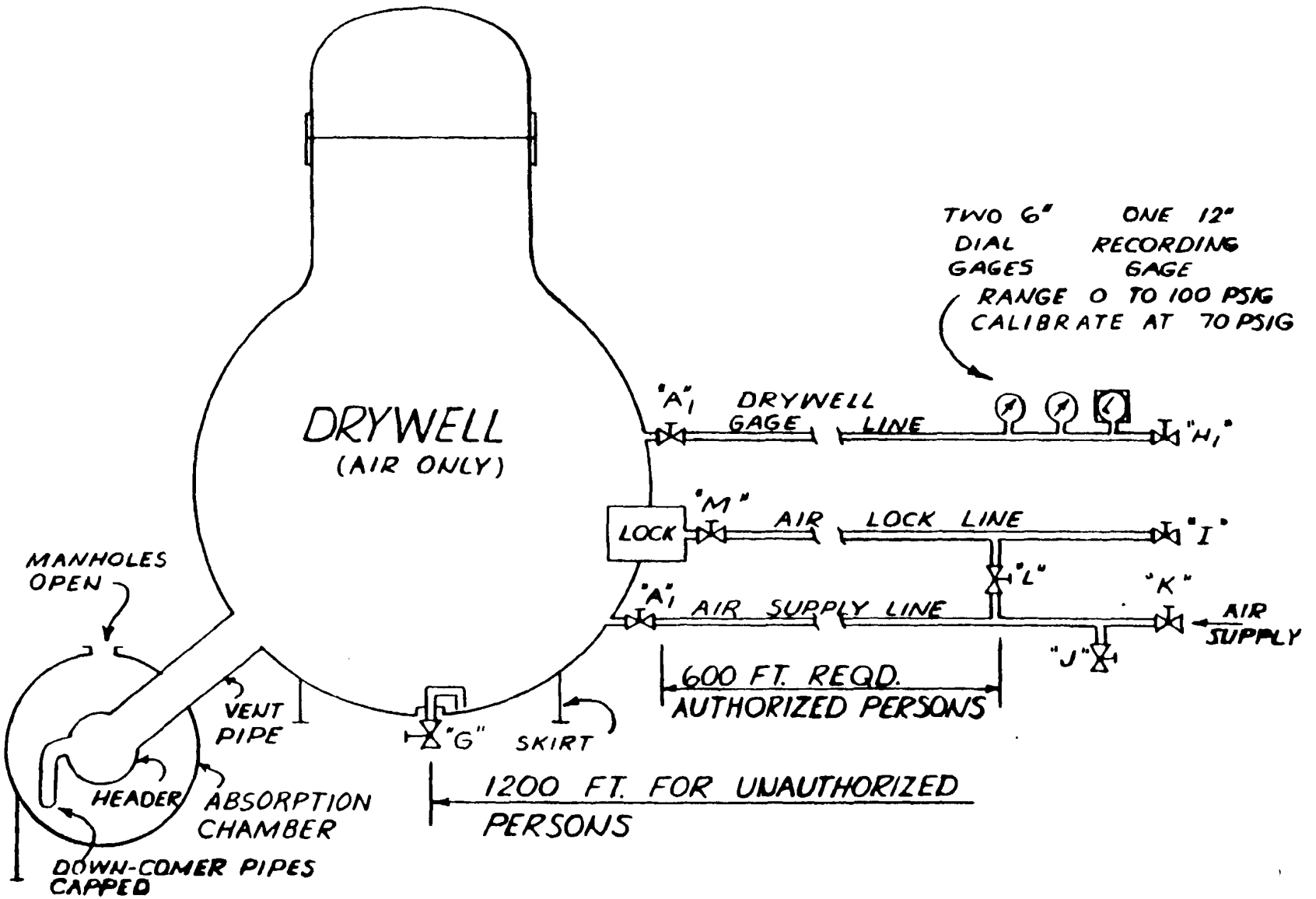

GPU Nuclear
Oyster Creek
Overload Test of Drywell

Update - 5
12/90

Fig. 3.8-25

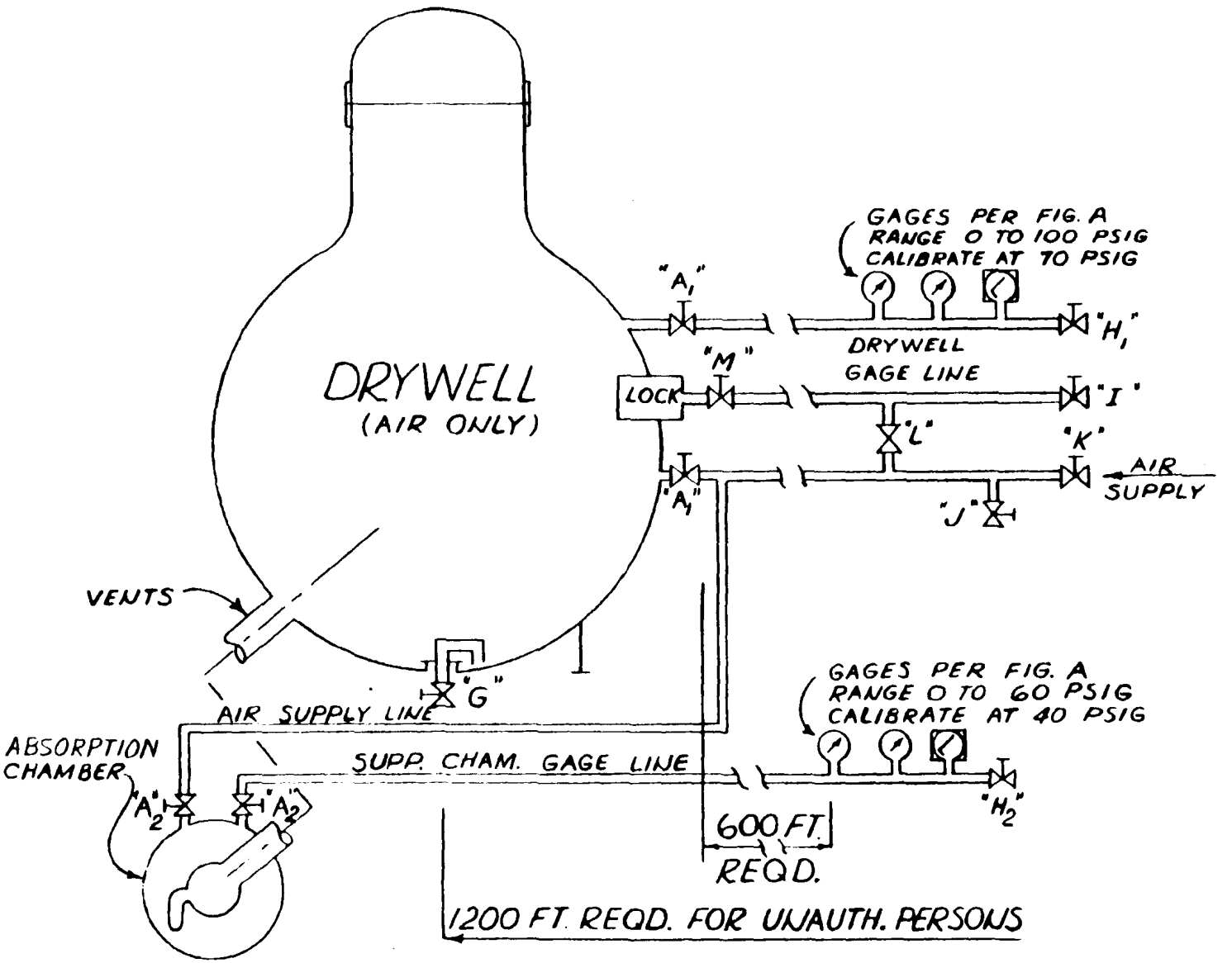

GPU Nuclear

Oyster Creek

Update - 5

12/90

Overload Test of Absorption Chamber

Fig. 3.8-26

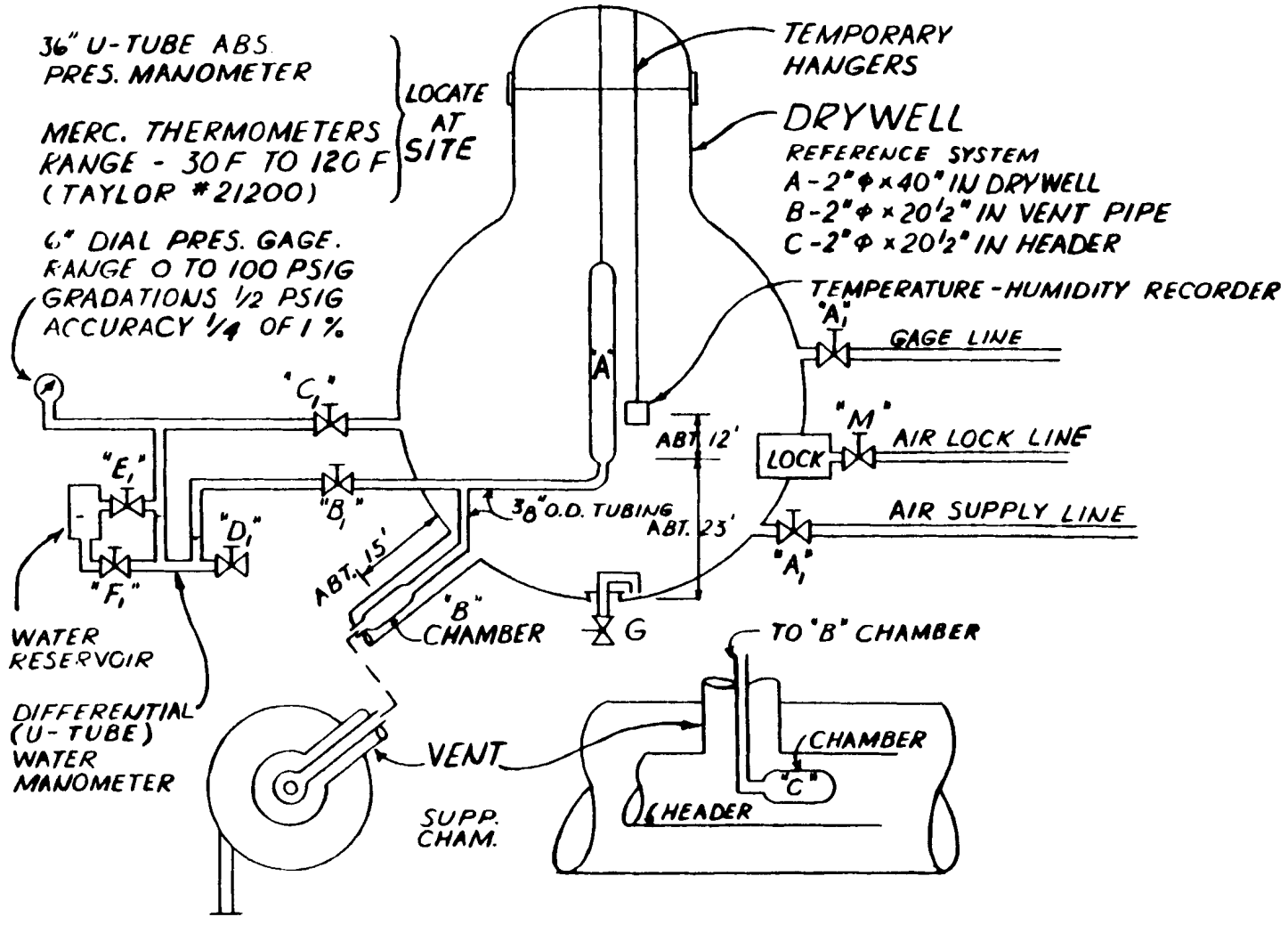

GPU Nuclear

Oyster Creek

Leakage Rate Test of Drywell

Update - 5

12/90

Fig. 3.8-27

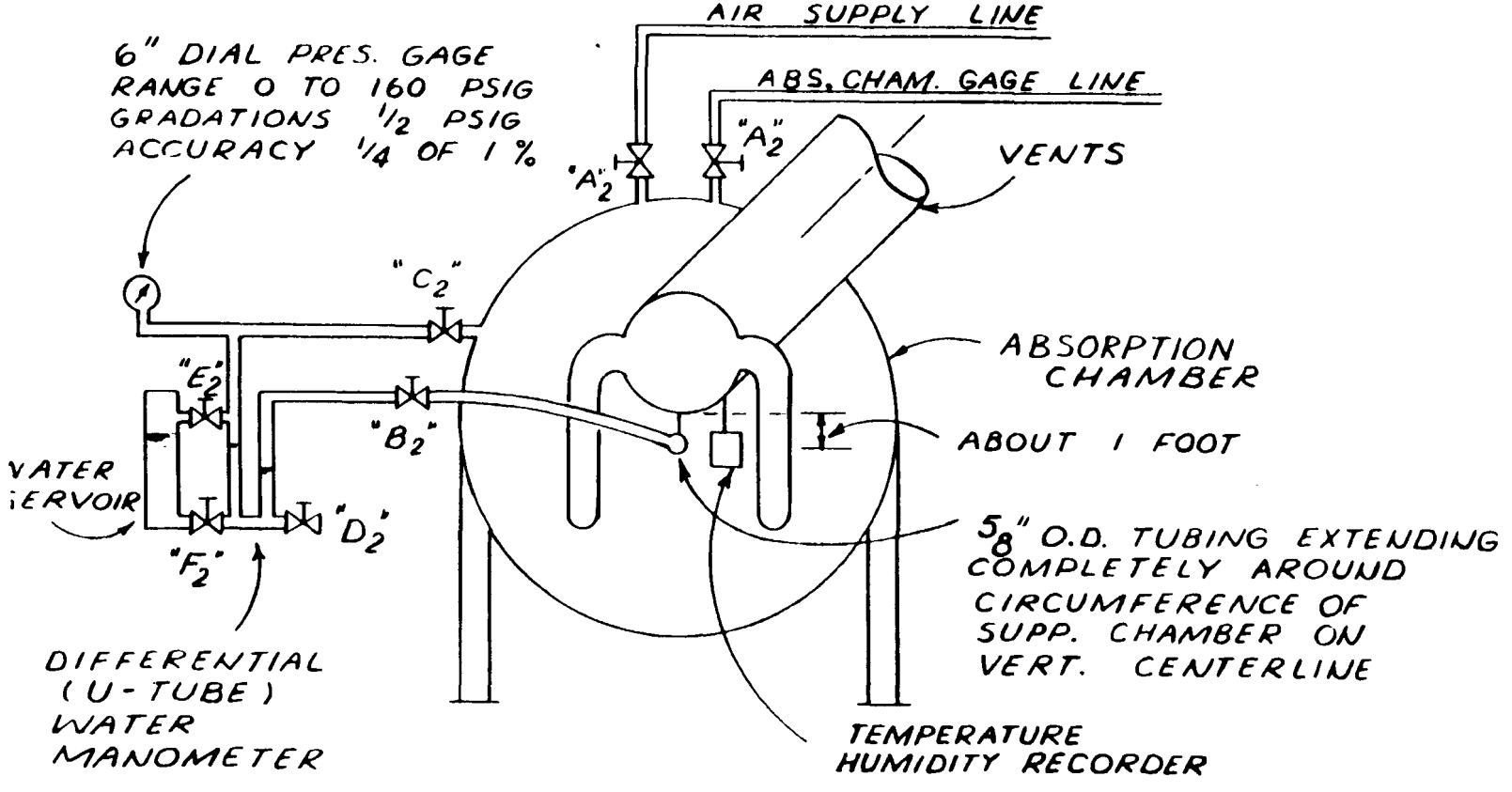

GPU Nuclear
Oyster Creek
Leakage Rate Test of Absorption Chamber

Update - 5
12/90

Fig. 3.8-28

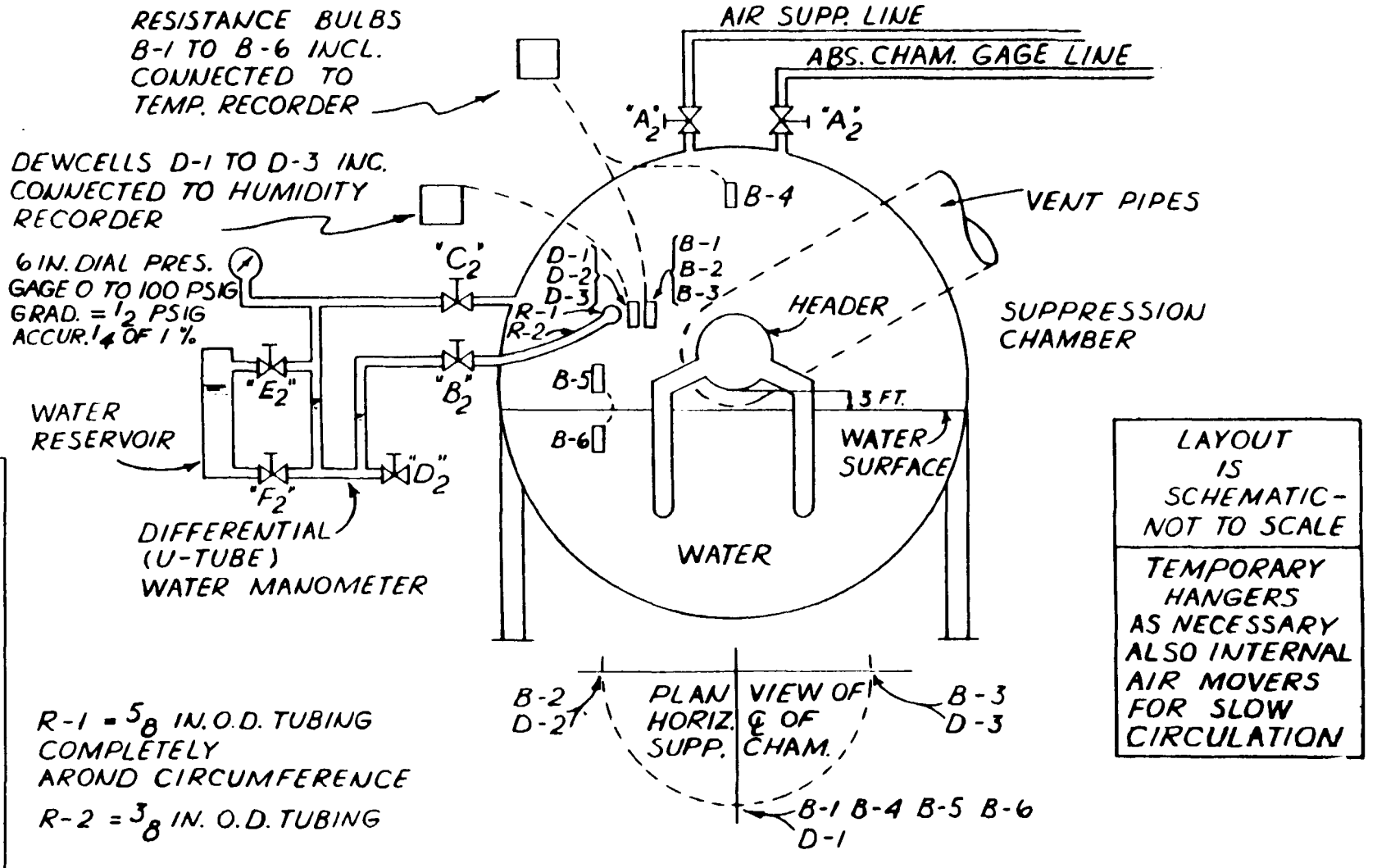

GPU Nuclear

Oyster Creek

Update - 5

12/90

Wet Leakage Rate Test of Absorption Chamber

Fig. 3.8-29

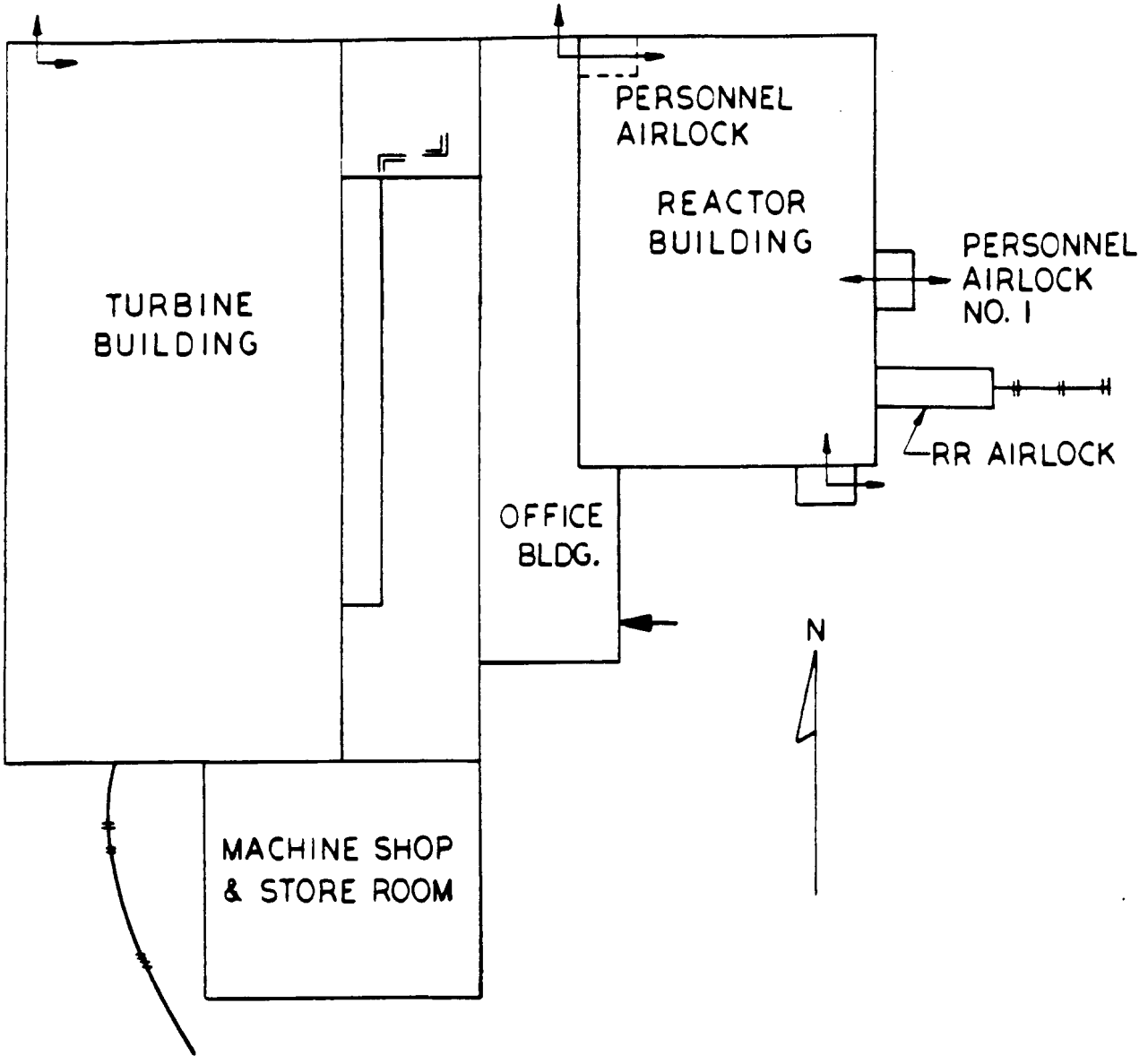

GPU Nuclear

Oyster Creek

Update - 5

12/90

Main Power Plant Complex — Key Plan

Fig. 3.8-30

Figures 3.8-31 through 3.8-36

Deleted

NOTES

1. ONLY THOSE STRUCTURAL ELEMENTS DESIGNED AS CATEGORY I ARE SHOWN.
2. AT EL. 48.0' ONLY CONCRETE SLAB IN AREA SHOWN IS DESIGNED AS CATEGORY I.

GPU Nuclear

Oyster Creek

Update - 5

12/90

Radwaste Building Identification of Seismic Category I Elements

Fig. 3.8-37

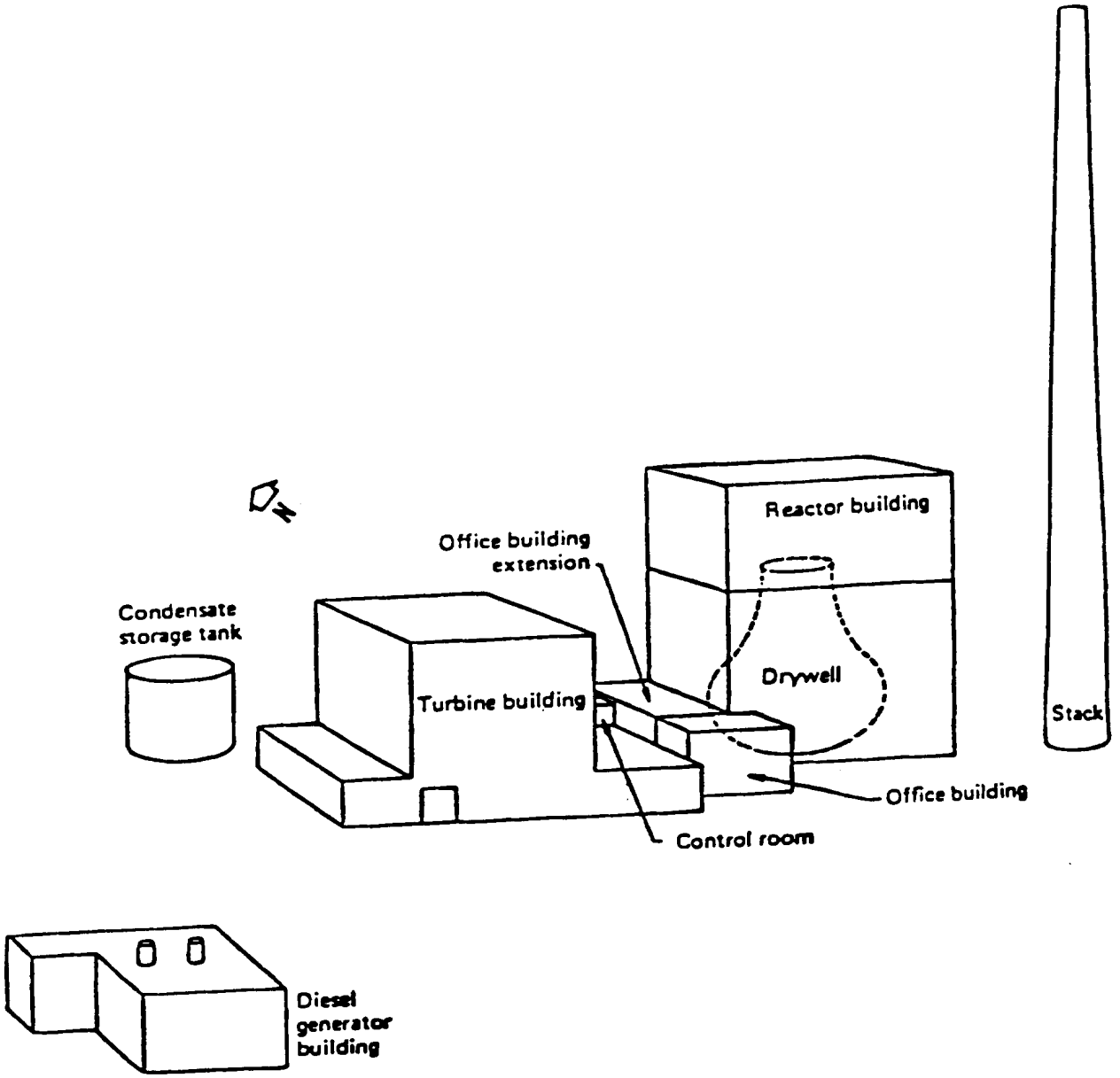

GPU Nuclear

Oyster Creek

Update - 5

12/90

Isometric of Oyster Creek Plant Showing Major Structures (Looking North)

Fig. 3.8-38

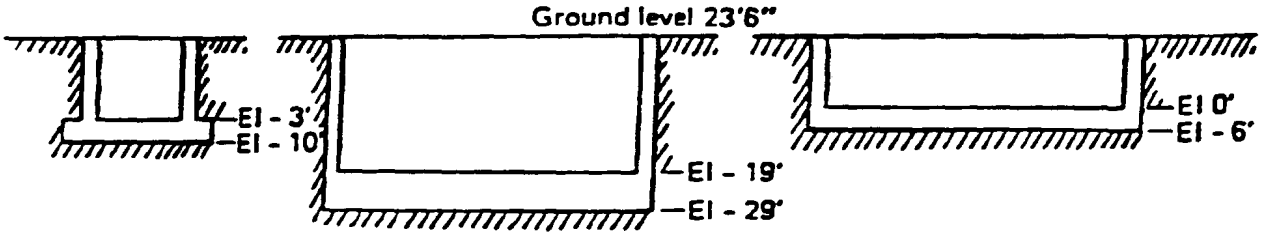

Stack hexagonal base:
45' face to face
E/b = 0.74

Reactor building square base:
140' X 140'
E/b = 0.375

Turbine building rectangular base:
270' (N-S) X 170' (E-W)
E/b = 0.173

E = embedment
b = least base dimension
Deep embedment case: E/b > 0.15

GPU Nuclear — Update - 5

Oyster Creek — 12/90

Sizes and Embedments of Bases of the Stack, Reactor Building, and Turbine Building (Orientation Looking South)

Fig. 3.8-39

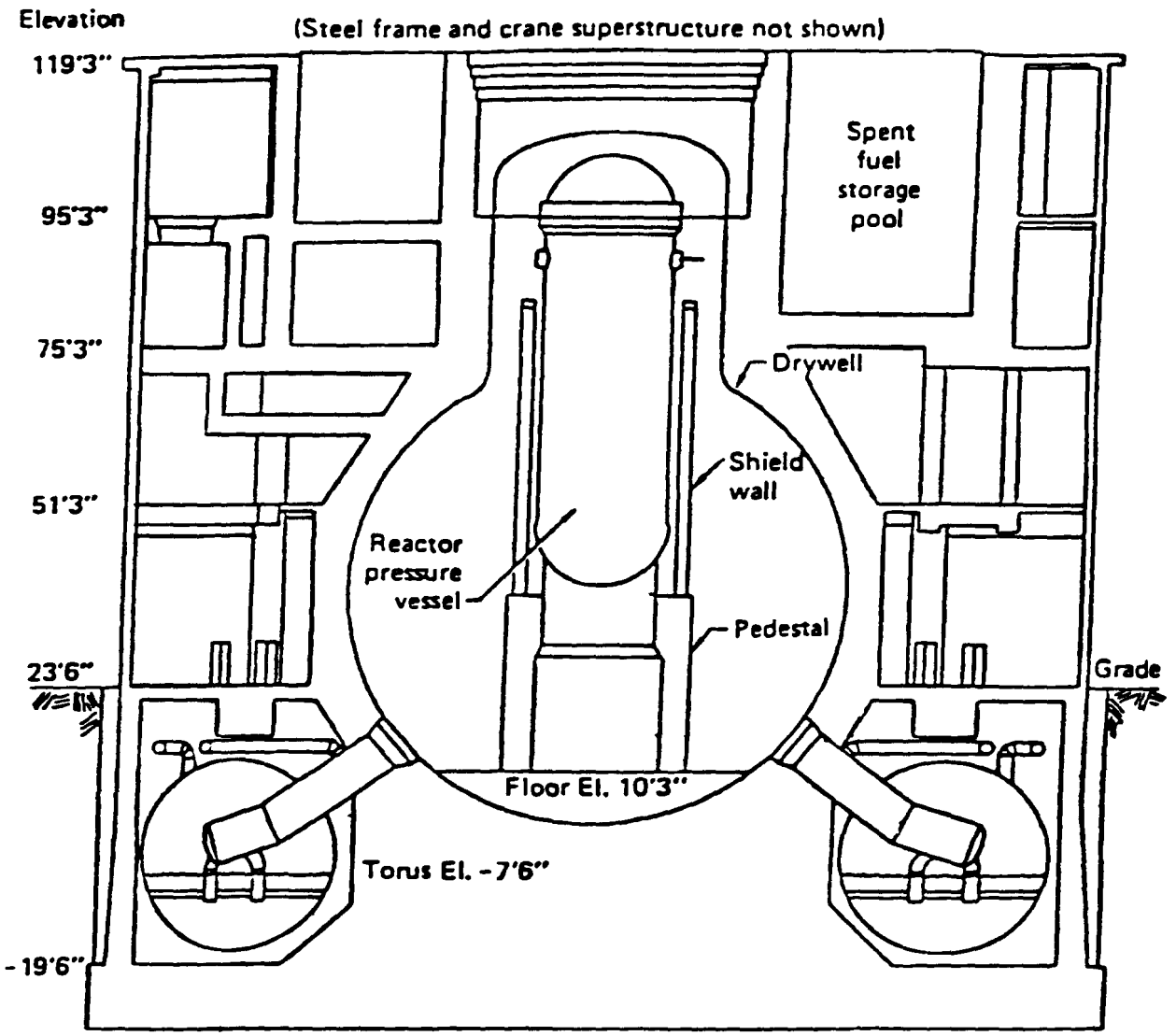

GPU Nuclear

Oyster Creek

Update - 5

12/90

Cross Section of the Reactor Building
(Section Looking North)

Fig. 3.8-40

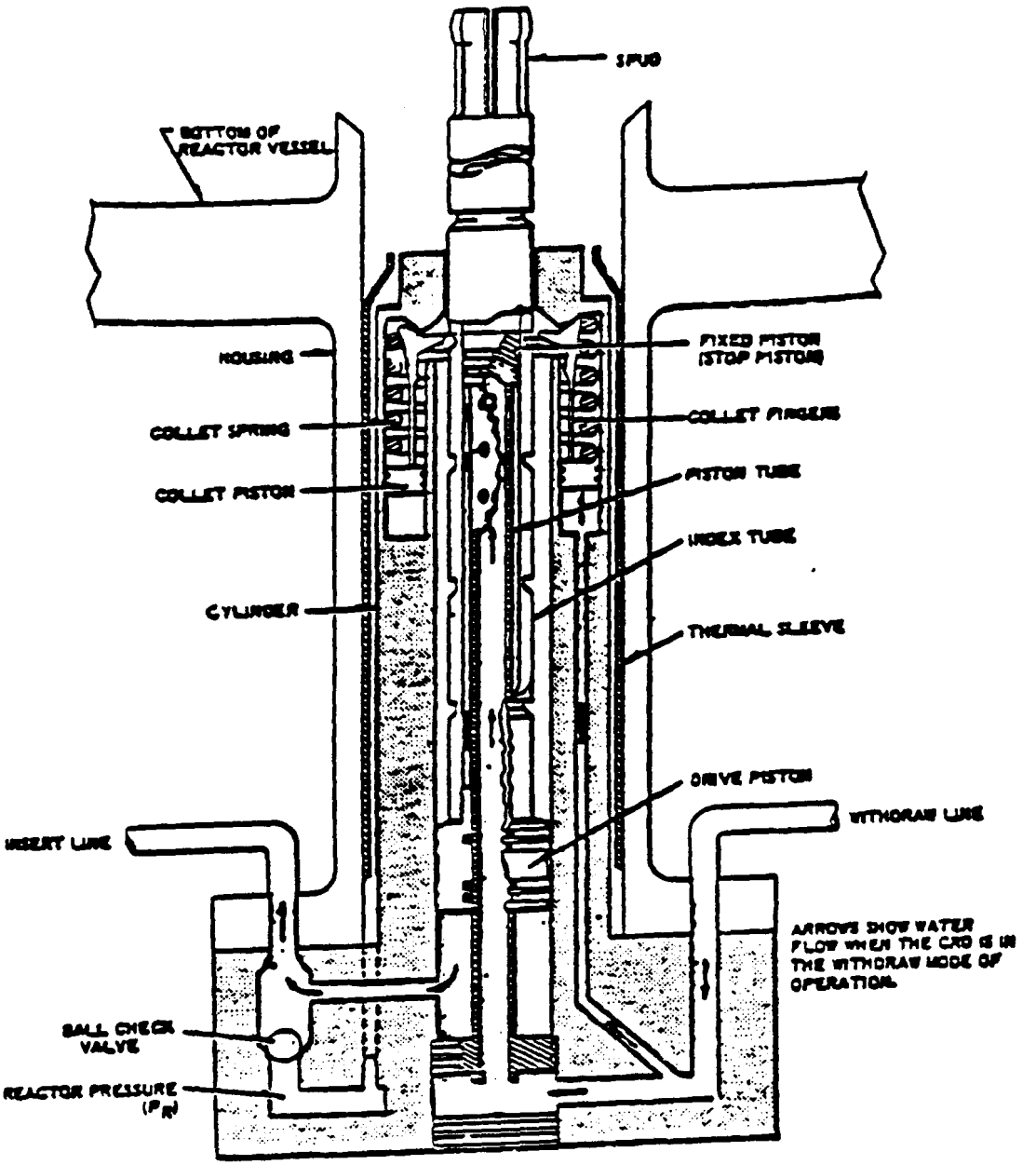

GPU Nuclear

Oyster Creek

Update - 5

12/90

Control Rod Drive — Cutaway

Fig. 3.9-1

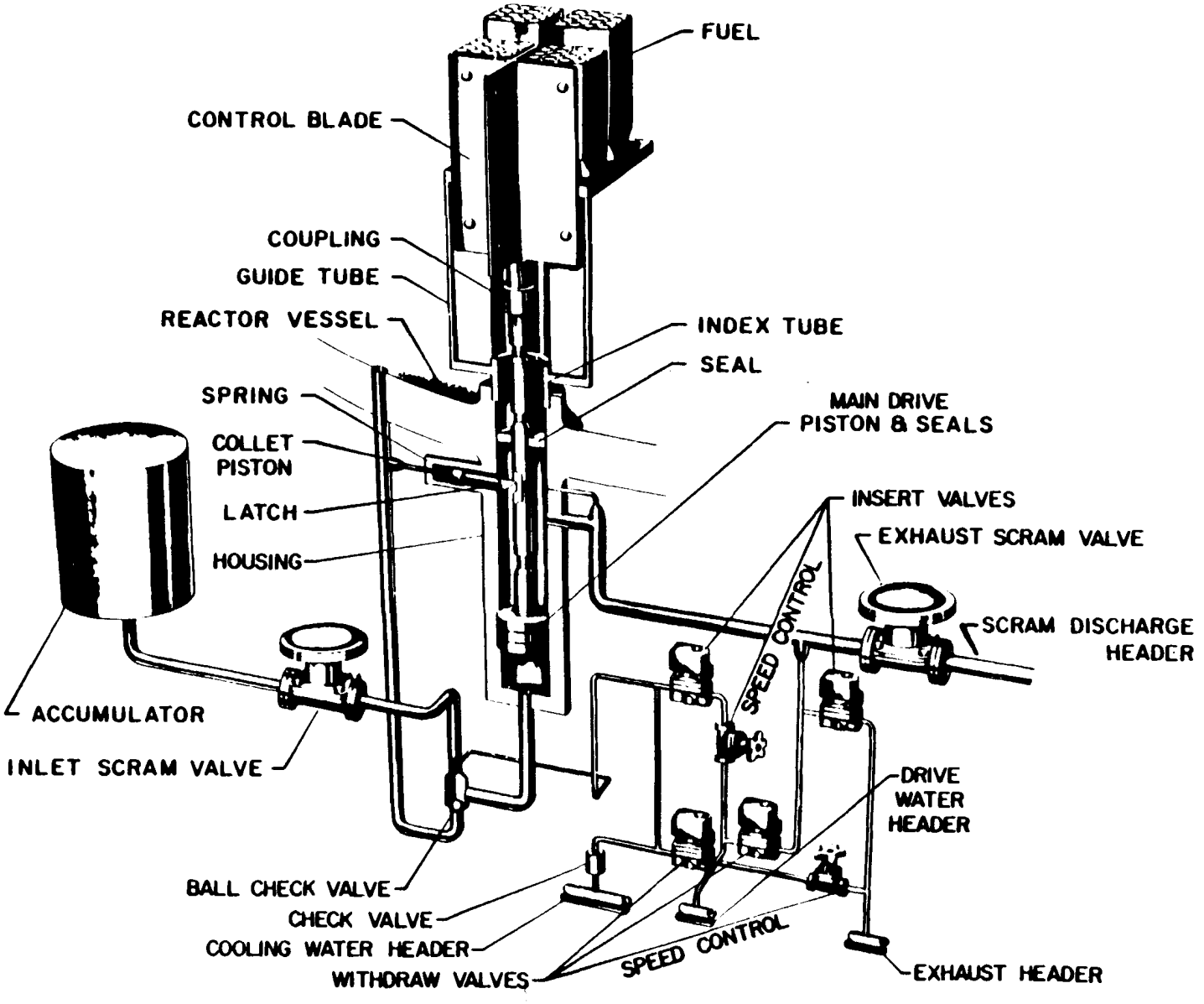

GPU Nuclear

Oyster Creek

Update - 5

12/90

Control Rod Drive System — Simplified
Component Illustration

Fig. 3.9-2

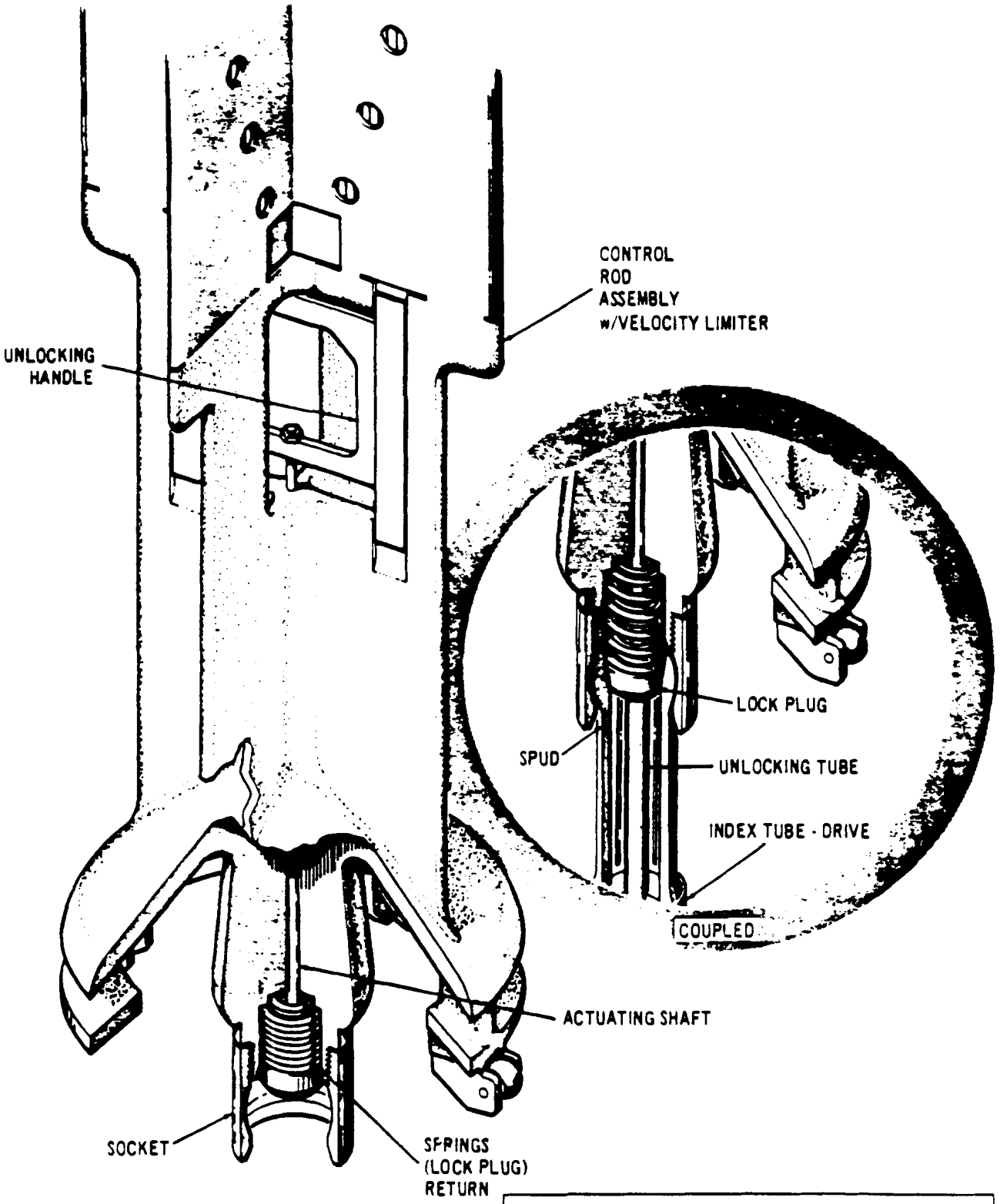

GPU Nuclear — Update - 5

Oyster Creek — 12/90

Control-Rod-to-Drive Coupling — Isometric

Fig. 3.9-3

Figure 3.9-4

Deleted

1. ACCUMULATOR CHARGING WATER RISER
2. DRIVE - WITHDRAW RISER
3. ISOLATION VALVE — DRIVE-WITHDRAW RISER (EP 102)
4. DRIVE WATER RISER
5. ISOLATION VALVE — DRIVE WATER RISER (EP 103)
6. ISOLATION VALVE — SCRAM DISCHARGE RISER (EP 108 OR EP 112)
7. SCRAM PILOT VALVE ASSEMBLY (EP 117, 118)
8. OUTLET SCRAM VALVE AND ACTUATOR (EP 127)
9. TYPICAL ELECTRICAL CONNECTION
10. WIRING TROUGH ASSEMBLY
11. MANIFOLD (PART OF PIPING ASSEMBLY)
12. DIRECTIONAL CONTROL VALVES (4 EACH) (EP 120, 121, 122, 123)
13. ISOLATION VALVE — ACCUMULATOR CHARGING WATER RISER (EP 106
14. SCRAM ACCUMULATOR — NITROGEN CYLINDER (EP 128)
15. ACCUMULATOR GAS PRESSURE INDICATOR (EP 131)
16. ACCUMULATOR INSTRUMENTATION ASSEMBLY
17. NEEDLE VALVE — ACCUMULATOR GAS CHARGING (EP 111)
18. FRAME
19. SCRAM ACCUMULATOR — WATER CYLINDER (EP 125)
20. NEEDLE VALVE — ACCUMULATOR WATER CYLINDER DRAIN (EP 107)
21. COOLING CHECK VALVE (IN MANIFOLD)
22. SPEED CONTROL VALVES (2 EACH)
23. INLET SCRAM VALVE AND ACTUATOR (EP 126)
24. ISOLATION VALVE — COOLING WATER RISER (EP 104)
25. ISOLATION VALVE — DRIVE-INSERT RISER (EP 101)
26. ISOLATION VALVE — EXHAUST WATER RISER (EP 105)
27. EXHAUST WATER RISER
28. DRIVE-INSERT RISER
29. COOLING WATER RISER
30. SCRAM DISCHARGE RISER

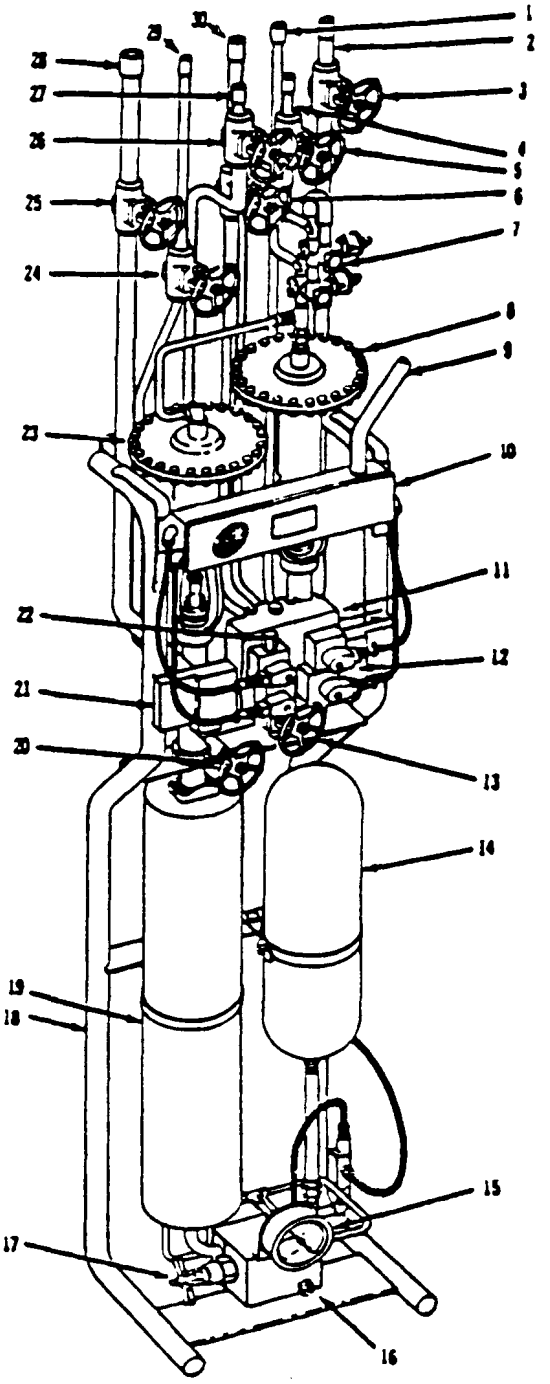

GPU Nuclear

Oyster Creek

Update - 5

12/90

Control Rod Drive — Hydraulic Control Unit — Isometric

Fig. 3.9-5

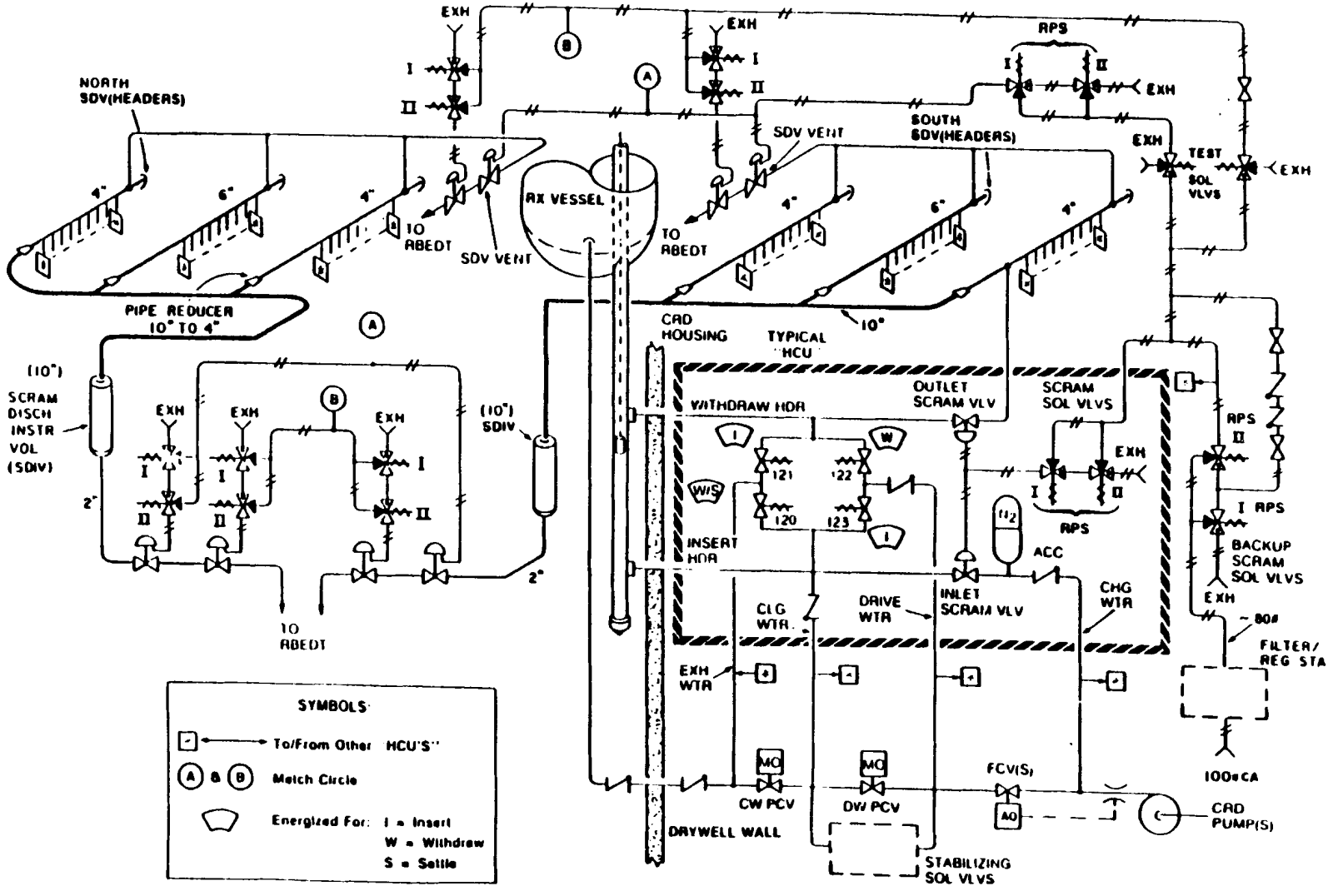

GPU Nuclear

Oyster Creek

Update - 5

12/90

Oyster Creek Control Rod Drive Hydraulic Control Units, Scram Discharge Volumes and Scram Air Valving - Simplified Sketch

Fig. 3.9-6

Figures 3.9-7 through 3.9-7B

Deleted

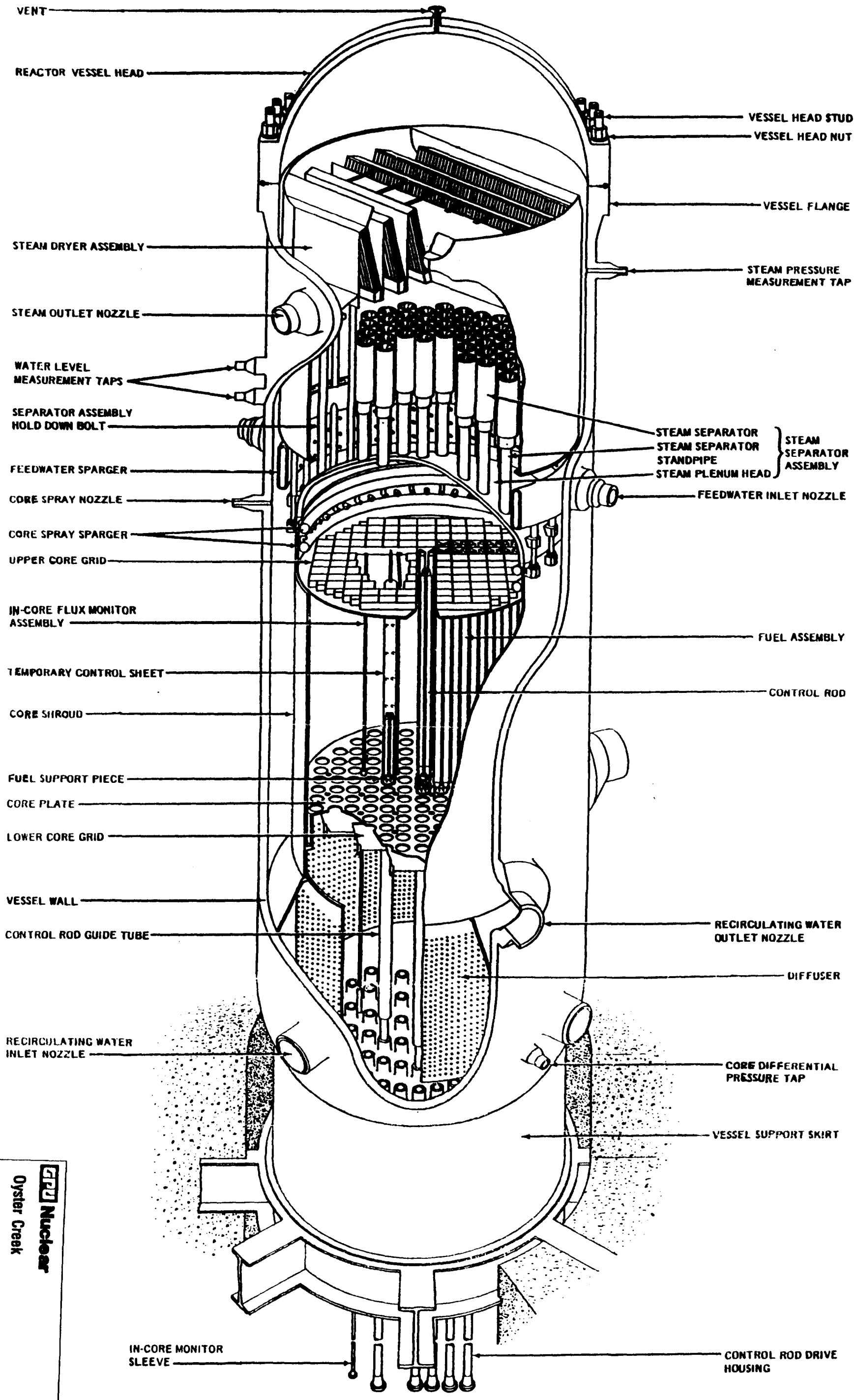

GPU Nuclear
Oyster Creek
Reactor Vessel Isometric

Update - 5
12/90

Fig. 3.9-8

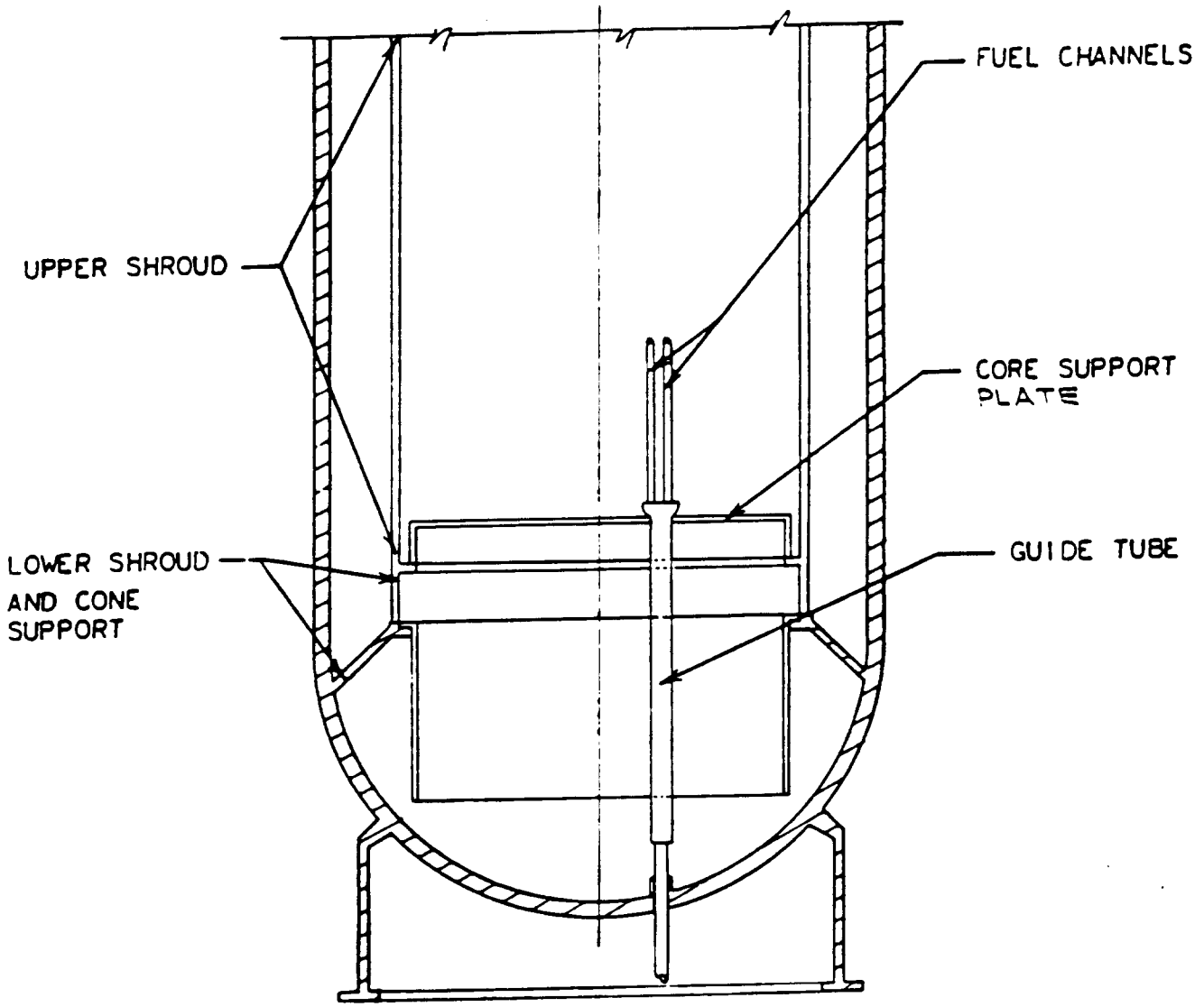

GPU Nuclear | Update - 5
Oyster Creek | 12/90

Core Structural Components

Fig. 3.9-9

ACTUAL CONFIGURATION PLAN VIEW

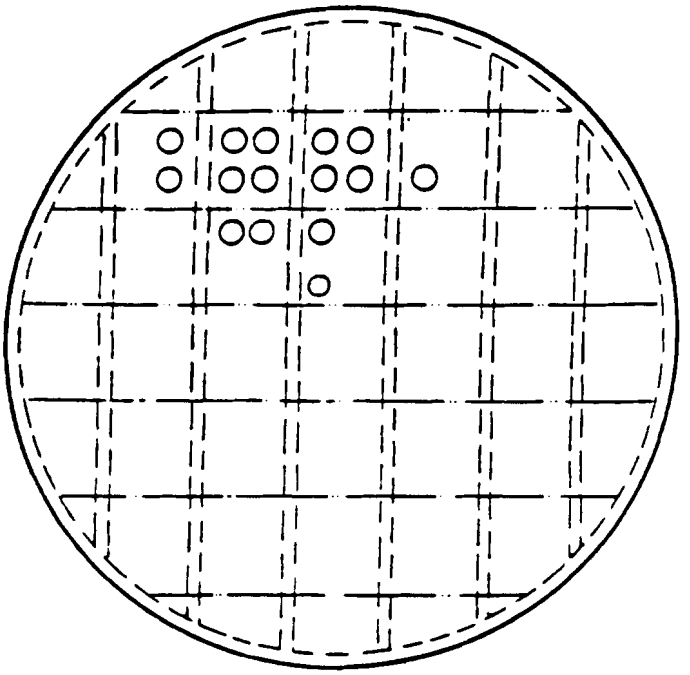

STRESS - STRAIN LAW

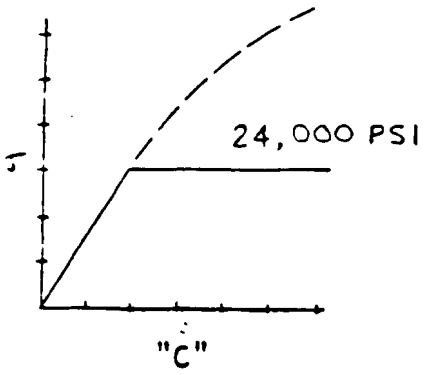

ACTUAL SECTION VIEW

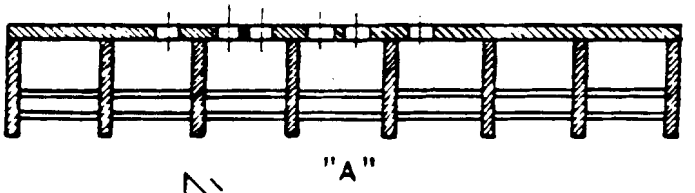

ANALYTICAL MODEL

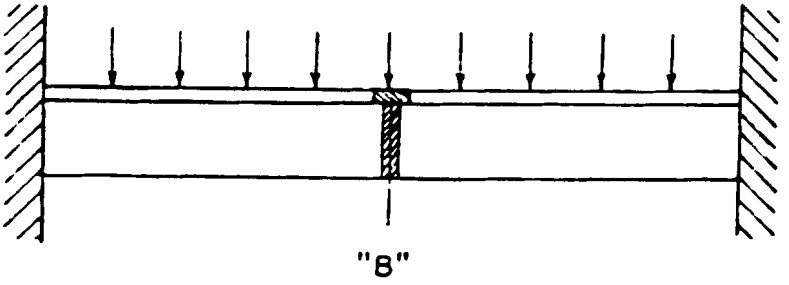

GPU Nuclear

Update - 5

Oyster Creek

12/90

Core Plate Analysis

Fig. 3.9-10

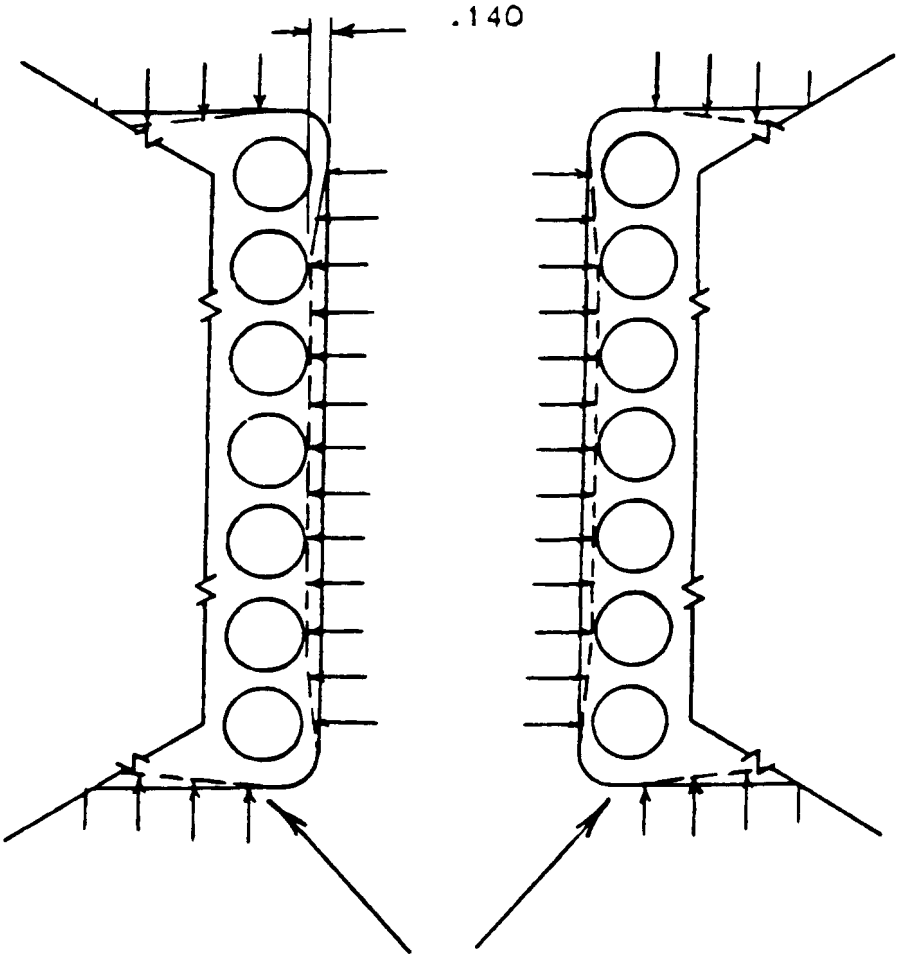

GPU Nuclear | Update - 5

Oyster Creek | 12/90

Results of Delta-P on the Fuel Channel Configuration

Fig. 3.9-11

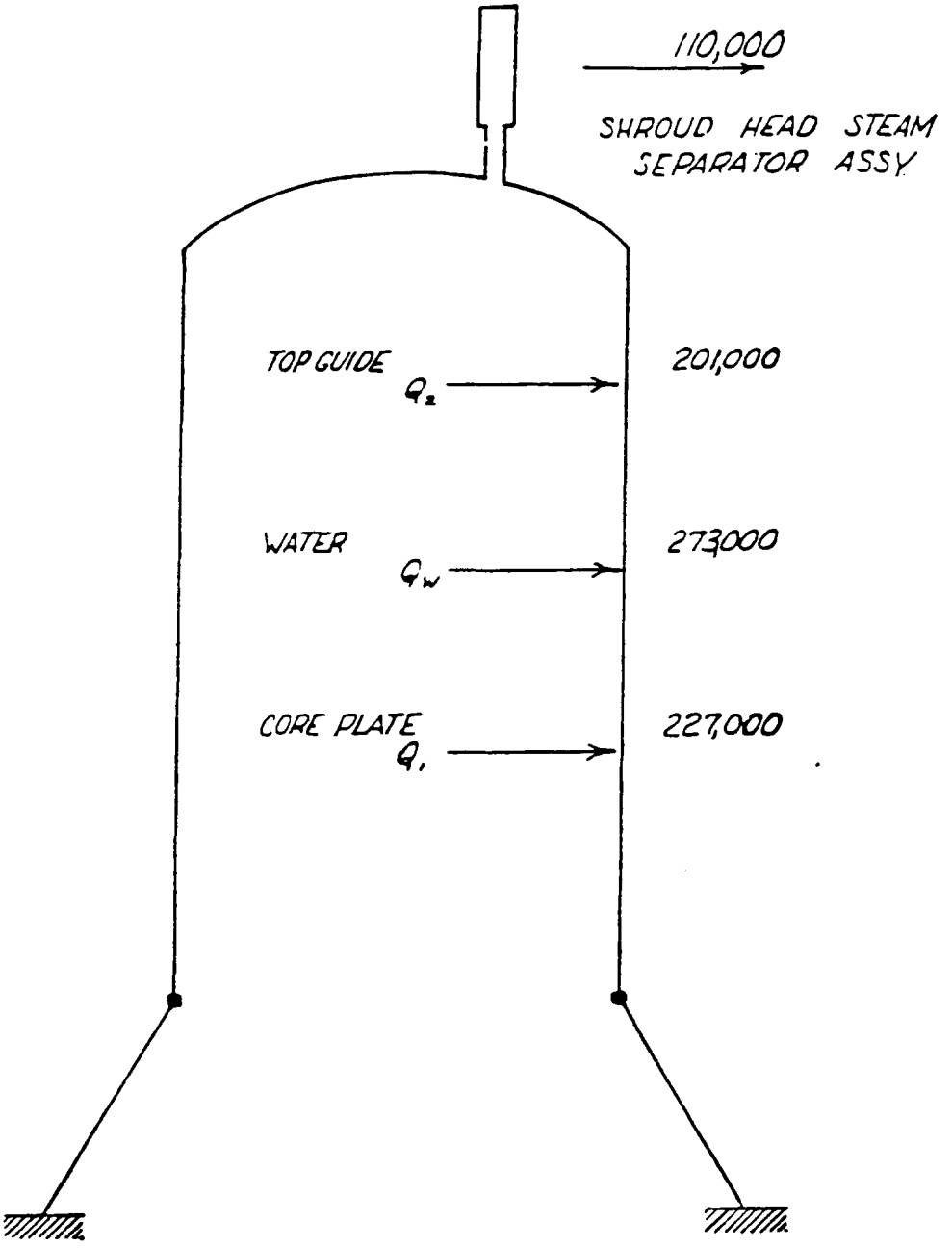

GPU Nuclear

Oyster Creek

Shroud Analytical Model

Update - 5

12/90

Fig. 3.9-12

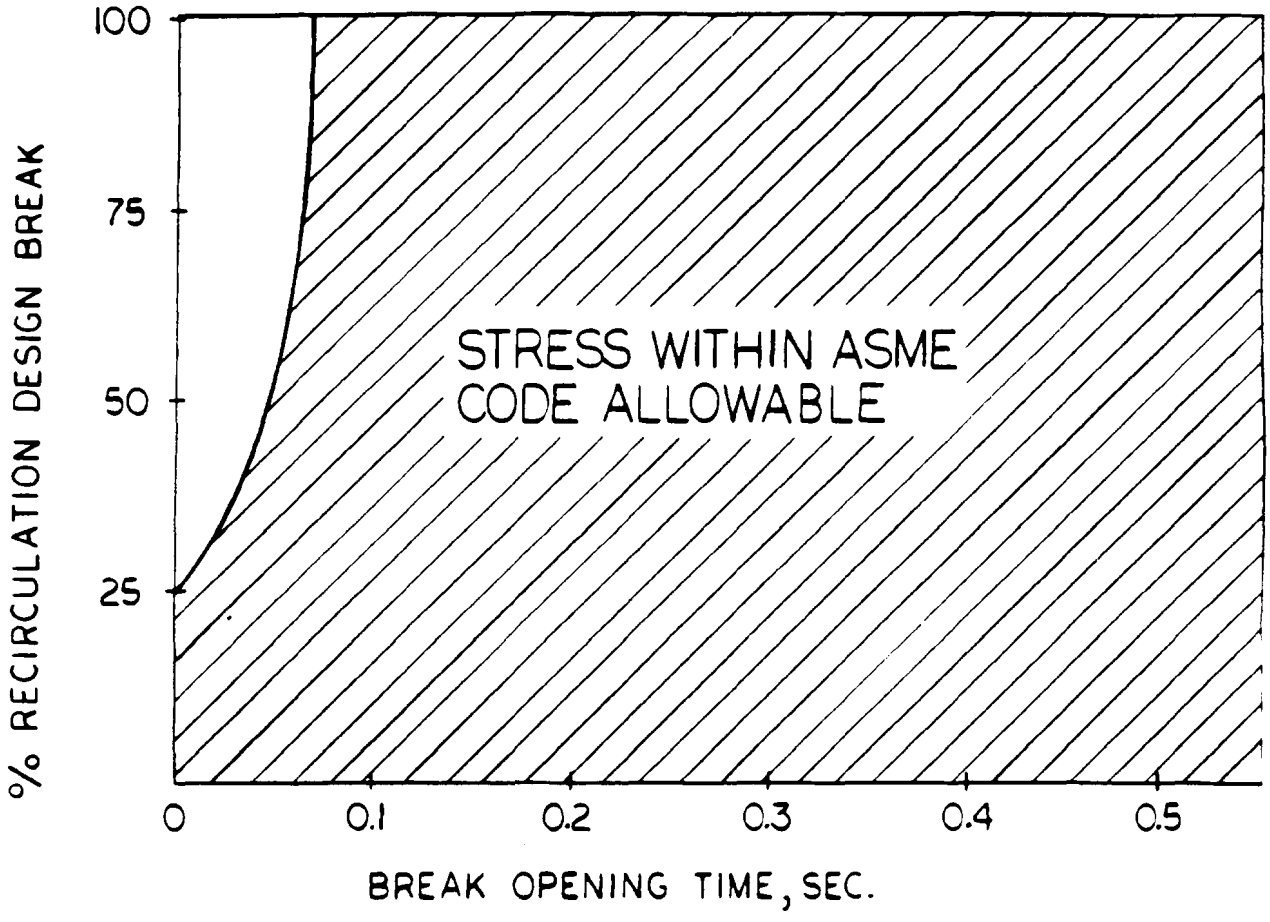

GPU Nuclear | Update - 5

Oyster Creek | 12/90

Core Plate - ASME Code Limiting Stress as a Function of Percent Design and Break Opening Time

Fig. 3.9-13

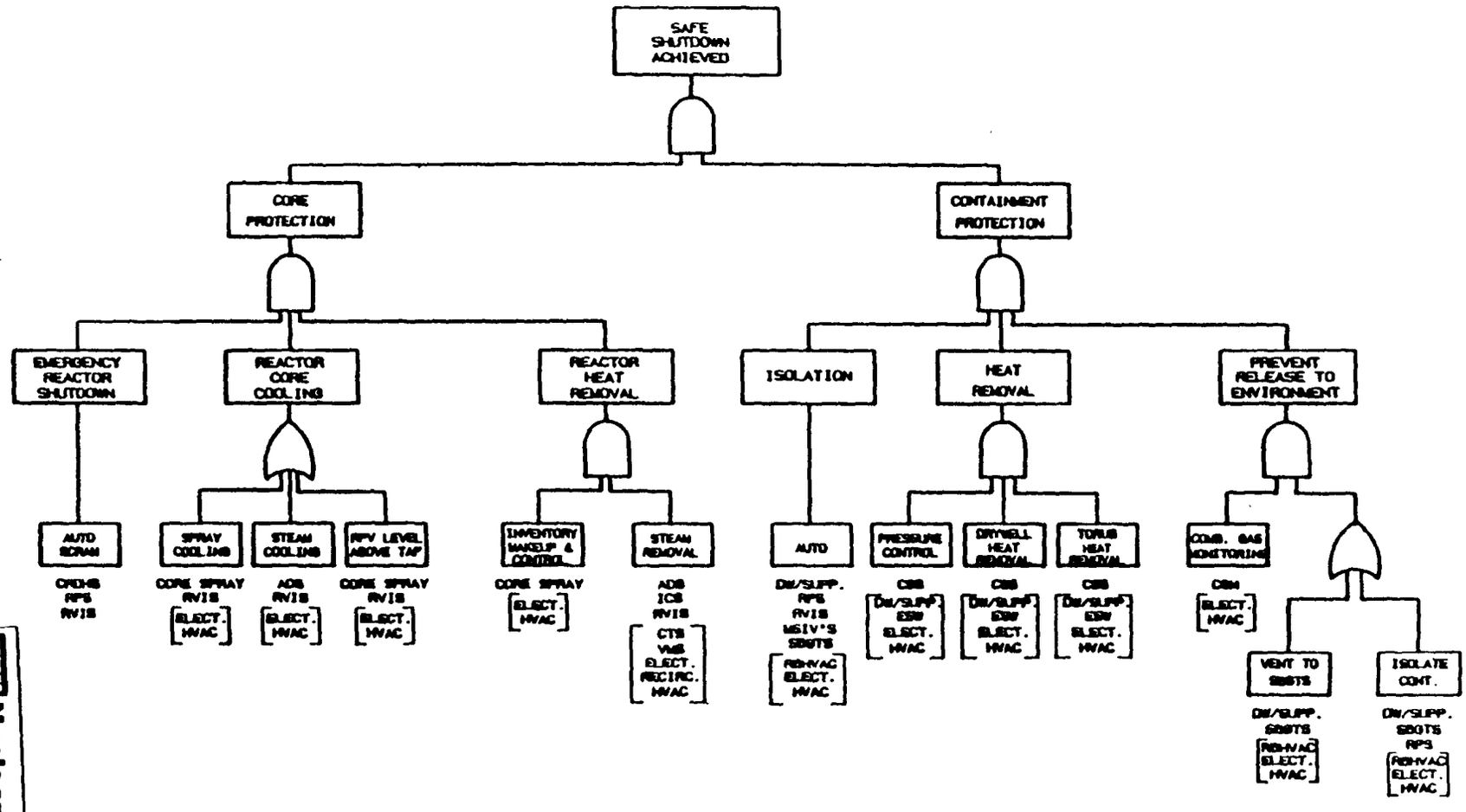

NOTE: [ ] DENOTES SUPPORTING SYSTEMS

GPU Nuclear

Oyster Creek

Plant Level Functional Criteria

Update - 5

12/90

Fig. 3.11-1

DBA PRESSURE PROFILE, DRYWELL

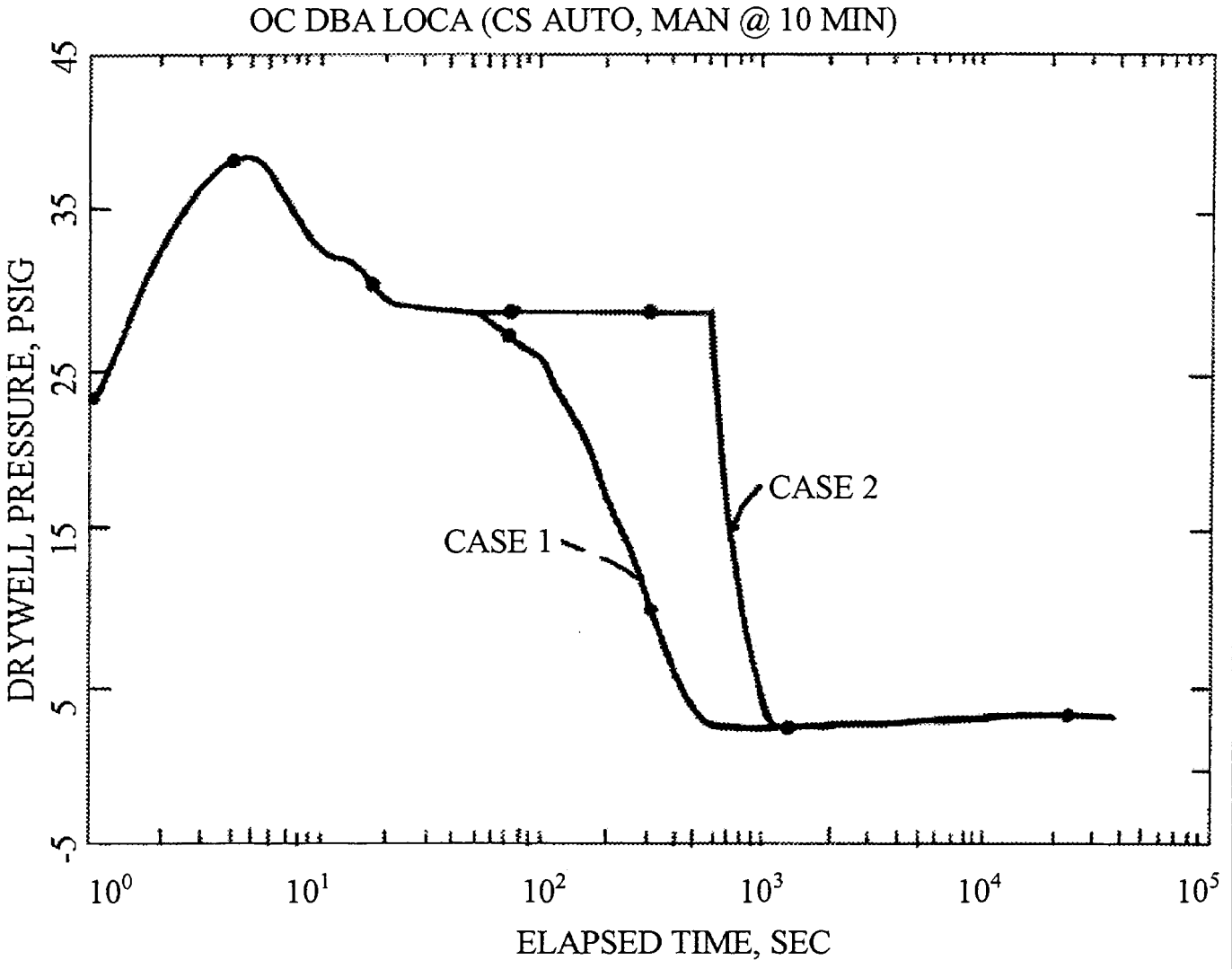

Rev. 12 04/01

OYSTER CREEK NUCLEAR GENERATING STATION

EQ Pressure Profile
Containment Spray Line Break
C-1302-241-E610-082

FIGURE 3.11-3

Figures 3.11-3A through 3.11-3C

Deleted