RESPONSE TO REQUEST FOR ADDITIONAL INFORMATION

APR1400 Design Certification

Korea Electric Power Corporation / Korea Hydro & Nuclear Power Co., LTD

Docket No. 52-046

RAI No.:	**160-8174**
SRP Section:	**09.03.04 – Chemical and Volume Control System (PWR) (Including Boron Recovery System)**
Application Section:	**SRP 9.3.4**
Date of RAI Issue:	**08/20/2015**

Question No. 09.03.04-1

In DCD Tier 2, Section 9.3.4.3.4, "Prevention for Wall Inward Buckling and Failure in Tanks," the applicant stated: "The VCT is designed to withstand vacuum conditions to prevent wall inward buckling and failure." The applicant provided no other information regarding vacuum condition mitigation for the VCT.

Following the guidance provided in SRP Section 9.3.4, the staff was unable to determine if adequate wall inward buckling protection is provided for the VCT. The staff needs the applicant to clarify how the VCT is designed to withstand vacuum conditions to prevent wall inward buckling and failure and to what conditions the VCT is designed. The applicant is requested to update the DCD as appropriate.

Response

The external design pressure of VCT is 1.05 kg/cm^{2}G (15 psig) as shown in DCD Tier 2 Table 9.3.4-2 (6 of 16). Namely, the VCT is designed to withstand a full vacuum (0 psia) under the atmospheric external condition (about 15 psia). The VCT is designed and fabricated to assure structural integrity in accordance with ASME B&PV Code, Section III, ND-3133 and ND-3324 by considering the external and internal design pressures.

As presented in Attachment, DCD Tier 2 Section 9.3.4.3.4 will be revised to include this information.

Impact on DCD

DCD Tier 2 Section 9.3.4.3.4 will be revised as presented in Attachment.

Impact on PRA

There is no impact on the PRA.

Impact on Technical Specifications

There is no impact on the Technical Specifications.

Impact on Technical/Topical/Environmental Reports

There is no impact on any Technical, Topical, or Environmental Reports.

9.3.4.3.4 Prevention for Wall Inward Buckling and Failure in Tanks

with external design pressure of 1.05 kg/cm^{2}G (15 psig)

The VCT is designed to withstand vacuum conditions to prevent wall inward buckling and failure. The reactor makeup water tank is provided with vacuum breakers to prevent a vacuum condition and relief valve to prevent overpressure. The holdup tank and boric acid storage tank are provided with sufficient air ingression lines to prevent vacuum condition.

(see Table 9.3.4-2)

9.3.4.3.5 Failure Modes and Effects Analysis

Because the CVCS does not perform an accident mitigation or safe shutdown function, a detailed failure modes and effects analysis is not performed.

9.3.4.3.6 Radiological Evaluation

Frequently used, manually operated valves located in high radiation areas or inaccessible areas are provided with extension stem handwheels that terminate in low radiation, accessible control areas. Manually operated valves are provided with locking provisions if unauthorized operation of the valve is considered a potential hazard to plant operation or personnel safety. Refer to Section 12.3 for further information.

9.3.4.4 Inspection and Testing Requirements

Each component is inspected and cleaned prior to installation into the CVCS. A high-velocity flush using demineralized water is used to flush particulate material and other potential contaminants from all lines in the system.

Instruments are calibrated during preoperational testing. Automatic controls are tested for actuation at the proper setpoints, and alarm functions are checked for operability and proper setpoints. The relief valve settings are checked and adjusted as required. All sections of the CVCS are operated and tested initially with regard to flow paths, flow capacity, and mechanical operability. Pumps are tested to demonstrate head and capacity.

The CVCS is tested for integrated operation with the RCS during hot functional testing. Testing of the proper control of the letdown orifice isolation valves and charging control valves by the pressurizer level error program is included. The charging line is checked to provide reasonable assurance that the piping is free of excessive vibration. Response of

RESPONSE TO REQUEST FOR ADDITIONAL INFORMATION

APR1400 Design Certification

Korea Electric Power Corporation / Korea Hydro & Nuclear Power Co., LTD

Docket No. 52-046

RAI No.:	**160-8174**
SRP Section:	**09.03.04 – Chemical and Volume Control System (PWR) (Including Boron Recovery System)**
Application Section:	**SRP 9.3.4**
Date of RAI Issue:	**08/20/2015**

Question No. 09.03.04-2

The applicant stated in DCD Tier 2, Section 9.3.4.3.2, “Accident Response,” that neither a CIAS nor a SIAS isolates the charging line; however, the CIAS and SIAS both isolate the letdown line. The staff noted that the charging line containment isolation valve, CV-524, according to DCD Tier 1, Table 2.4.6-2 and Figure 2.4.6-1, is normally open and fails as-is on a loss of motive power. However, DCD Tier 1, Table 2.4.6-2 indicates that the active safety function of CV-524 is to close.

GDC 55 requires containment isolation valves to be provided in lines that are a part of the reactor coolant pressure boundary and penetrate primary reactor containment. One way of meeting this requirement is to provide: "One automatic isolation valve inside and one automatic isolation valve outside containment. A simple check valve may not be used as the automatic isolation valve outside containment." The staff determined that the applicant's current isolation scheme for the charging line penetrating containment does not meet GDC 55 because the automatic isolation valve provided outside of containment could fail in the open position during an accident.

In accordance with SRP 9.3.4, the staff can not conclude that the CVCS contains adequate provisions for isolating the charging line during accident scenarios. The staff needs the applicant to justify how the existing charging line meets GDC 55, provide justification for why this line does not need to meet GDC 55, or update the current design to reflect conformance with containment isolation requirements. The applicant is requested to update the DCD as appropriate.

Response

GDC 55 allows exemption from the application of its requirement by specifying the following description: “unless it can be demonstrated that the containment isolation provisions for a

specific class of lines, such as instrument lines, are acceptable on some other defined basis." SRP 6.2.4, "Containment Isolation System," Acceptance Criteria 10 includes the following sentence: "For engineered safety feature or engineered safety feature-related systems, isolation valves in the lines may remain open or be opened."

While the flow in the letdown line goes out of the containment, the flow in the charging line goes into the containment. During a design basis accident such as LOCA, the letdown line is isolated, but the charging line is not isolated automatically. This is helpful in maintaining the reactor coolant inventory in the reactor (function similar to an engineered safety feature system) by injecting the borated water into the RCS with an available charging pump. This function of the charging line under an accident condition satisfies the intent of SRP 6.2.4 Acceptance Criteria 10. So, CV-524 does not receive a CIAS but remains open during an accident. Refer to Response to GDC 55 described in DCD Tier 2, Section 3.1.48. In addition, CV-524 can be closed remote-manually in the main control room by the operator, and this is the active safety function of this valve.

Impact on DCD

There is no impact on the DCD.

Impact on PRA

There is no impact on the PRA.

Impact on Technical Specifications

There is no impact on the Technical Specifications.

Impact on Technical/Topical/Environmental Reports

There is no impact on any Technical, Topical, or Environmental Reports.

RESPONSE TO REQUEST FOR ADDITIONAL INFORMATION

APR1400 Design Certification

Korea Electric Power Corporation / Korea Hydro & Nuclear Power Co., LTD

Docket No. 52-046

RAI No.:	**160-8174**
SRP Section:	**09.03.04 – Chemical and Volume Control System (PWR) (Including Boron Recovery System)**
Application Section:	**SRP 9.3.4**
Date of RAI Issue:	**08/20/2015**

Question No. 09.03.04-3

In accordance with GDC 33, “Reactor Coolant Makeup,” the design shall contain a system to supply reactor coolant makeup for protection against small breaks in the RCPB. The system shall be designed to assure that the system safety function can be accomplished, assuming only offsite power is available or only onsite power is available, using the piping, pumps, and valves which are used to maintain coolant inventory during normal reactor operation. The staff reviewed the applicant’s design and confirmed that the CVCS is not required to supply reactor coolant makeup to mitigate small breaks or leaks in the RCPB; however, the staff noted that the CVCS does have the capacity to replace the flow lost to containment due to a break in a small RCS line, such as instrument and sample lines, and has the provisions for being powered from either onsite or offsite power sources.

The staff noted that the applicant implied, in DCD Tier 2, Section 3.1.29, “Criterion 33 – Reactor Coolant Makeup,” that conformance with GDC 33 is met by the system function of the CVCS. While the staff agrees that the CVCS does provide for normal RCS makeup and chemistry control, and that the CVCS has the capability of mitigating the effects of certain small sized breaks, it does not have a safety-related coolant makeup function. The intent of GDC 33 is aimed at providing a system, whose piping, pumps, and valves are used in normal operation to maintain coolant inventory, and whose safety function is to assure that specified acceptable fuel design limits are not exceeded as a result of reactor coolant leakage or a small break in the RCPB. Although the APR1400 CVCS has piping, pumps and valves relied upon for normal operation, it is the staff's understanding that those piping, pumps and valves are not safety-related nor are they relied upon during an accident.

Since CVCS does not have a safety-related coolant makeup function, the staff needs the applicant to justify the reference to CVCS in DCD Tier 2, Section 3.1.29 and/or update the DCD as appropriate.

Response

GDC 33 requires reactor coolant inventory makeup during normal reactor operation, not during an accident. As stated in DCD Tier 2, Paragraph 9.3.4.1.2.e, one charging pump has enough capacity to make up for the flow lost to the containment due to a break in a small RCS line, such as instrument and sample lines. These lines have flow-restricting devices with internal diameter 5.56 mm (7/32 inch) and length 25.4 mm (1 inch) which are installed in their RCS nozzles to limit leakage in the event of a line break. For the break in a pipe larger than the above lines, considered as an accident (i.e., a LOCA), the reactor coolant inventory makeup is performed by the other dedicated system (safety injection system), not by the CVCS (see DCD Tier 2, Section 9.3.4.2.9.4).

The CVCS components and piping performing the reactor coolant makeup function are all designed as ASME Section III Class 2 or 3 (see DCD Tier 2, Table 9.3.4-2) and the CVCS pumps and valves performing this function are all supplied with Class 1E power.

The CVCS has been designed to meet the GDC 33 requirements.

Impact on DCD

There is no impact on the DCD.

Impact on PRA

There is no impact on the PRA.

Impact on Technical Specifications

There is no impact on the Technical Specifications.

Impact on Technical/Topical/Environmental Reports

There is no impact on any Technical, Topical, or Environmental Reports.

RESPONSE TO REQUEST FOR ADDITIONAL INFORMATION

APR1400 Design Certification

Korea Electric Power Corporation / Korea Hydro & Nuclear Power Co., LTD

Docket No. 52-046

RAI No.:	**160-8174**
SRP Section:	**09.03.04 – Chemical and Volume Control System (PWR) (Including Boron Recovery System)**
Application Section:	**SRP 9.3.4**
Date of RAI Issue:	**08/20/2015**

Question No. 09.03.04-4

The applicant stated in DCD Tier 2, Section 9.3.4.2, that neither a CIAS nor a SIAS isolates the RCP controlled bleedoff (CBO) line isolation valves (CV-505 and CV-506); however, a CSAS does isolate the CBO isolation valves. The staff noted that CV-505 and CV-506, according to DCD Tier 1, Table 2.4.6-2 and Figure 2.4.6-1, are normally open but fail closed on a loss of motive power. Furthermore, DCD Tier 1, Table 2.4.6-2 indicates that the active safety functions of CV-505 and CV-506 are to close.

GDC 55 requires containment isolation valves to be provided in lines that are a part of the reactor coolant pressure boundary and penetrate primary reactor containment. One way of meeting this requirement is to provide: "One automatic isolation valve inside and one automatic isolation valve outside containment. A simple check valve may not be used as the automatic isolation valve outside containment." The staff determined that the applicant's current isolation scheme for the CBO line penetrating containment does not meet GDC 55 because the automatic isolation valves provided inside and outside of containment do not automatically close during an accident.

In accordance with SRP 9.3.4, the staff can not conclude that the CVCS contains adequate provisions for isolating the CBO line during accident scenarios. The staff needs the applicant to justify how the existing CBO line meets GDC 55, provide justification for why this line does not need to meet GDC 55, or update the current design to reflect conformance with containment isolation requirements and update the DCD as appropriate.

Response

A CIAS and an SIAS are generated at a high containment pressure of 133.6 cmH_2O (1.9 psig) or low pressurizer pressure of 127.3 kg/cm^2A (1,810 psia) and a CSAS is generated at high-high containment pressure of 1,408.3 cmH_2O (20.03 psig) (see DCD Tier 2, Table 7.3-5A).

The RCP controlled bleedoff (CBO) line isolation valves (CV-505 and CV-506) are automatically closed on a CSAS which is also engineered safety feature actuation signal (ESFAS) generated during an accident. If a CIAS or SIAS is generated during an accident, the RCP CBO line remains open because it is advantageous for accident mitigation to provide seal injection flow to the RCPs. So, these valves receive neither a CIAS nor an SIAS.

Because the RCP CBO line isolation valves (CV-505 and CV-506) do not receive a CIAS or an SIAS but a CSAS, the RCP seal injection flow can be provided for a longer period of time. So, the intent of GDC 55(to provide greater safety) is satisfied.

Impact on DCD

There is no impact on the DCD.

Impact on PRA

There is no impact on the PRA.

Impact on Technical Specifications

There is no impact on the Technical Specifications.

Impact on Technical/Topical/Environmental Reports

There is no impact on any Technical, Topical, or Environmental Reports.

RESPONSE TO REQUEST FOR ADDITIONAL INFORMATION

APR1400 Design Certification

Korea Electric Power Corporation / Korea Hydro & Nuclear Power Co., LTD

Docket No. 52-046

RAI No.:	**160-8174**
SRP Section:	**09.03.04 – Chemical and Volume Control System (PWR) (Including Boron Recovery System)**
Application Section:	**SRP 9.3.4**
Date of RAI Issue:	**08/20/2015**

Question No. 09.03.04-5

According to DCD Tier 1, Table 2.4.6-2 and Figure 2.4.6-1, the staff noted that the IRWST makeup line containment isolation valve (CV-509) fails as-is on a loss of motive power; however, the active safety function of this valve is to close. GDC 55 states that “isolation valves outside containment shall be located as close to containment as practical and upon loss of actuating power, automatic isolation valves shall be designed to take the position that provides greater safety.”

The staff needs the applicant to justify how CV-509 meets GDC 55 regarding its loss-of-motive-power failure position (i.e. justify how CV-509 failing as-is, when the valve is open, is the valve position that provides greater safety than a failure position of closed) and update the DCD as appropriate.

Response

The IRWST makeup line containment isolation valve (CV-509) is normally closed and rarely used during normal plant operation, but open only for makeup of the IRWST when necessary. Because the IRWST is the suction source for the safety injection pumps, the makeup of the IRWST when the IRWST level is lowered, is considered as providing greater safety. If the loss of motive power to CV-509 occurs when the valve is open for makeup of the IRWST, it remains open and makeup of the IRWST is continued; that is advantageous to safety.

Therefore, its loss-of-motive-power failure position (i.e., CV-509 failing as-is) is the valve position that provides greater safety, and the GDC 55 requirement is satisfied.

Impact on DCD

There is no impact on the DCD.

Impact on PRA

There is no impact on the PRA.

Impact on Technical Specifications

There is no impact on the Technical Specifications.

Impact on Technical/Topical/Environmental Reports

There is no impact on any Technical, Topical, or Environmental Reports.

RESPONSE TO REQUEST FOR ADDITIONAL INFORMATION

APR1400 Design Certification

Korea Electric Power Corporation / Korea Hydro & Nuclear Power Co., LTD

Docket No. 52-046

RAI No.:	**160-8174**
SRP Section:	**09.03.04 – Chemical and Volume Control System (PWR) (Including Boron Recovery System)**
Application Section:	**SRP 9.3.4**
Date of RAI Issue:	**08/20/2015**

Question No. 09.03.04-6

In DCD Tier 1, Figure 2.4.6-1, the staff noted that containment isolation valve, CV-362, was lacking indication of valve position status. However, in DCD Tier 2, Figure 9.3.4-1, the staff noted that CV-362 is locked closed during normal operation. Tier 1 information should be derived from and consistent with Tier 2 information.

The staff requests the applicant to update DCD Tier 1, Figure 2.4.6-1 to include valve position status of CV-362 consistent with what is shown in DCD Tier 2, Figure 9.3.4-1.

Response

As shown in DCD Tier 2, Figure 9.3.4-1, CV-362 is locked closed during normal operation. DCD Tier 1, Figure 2.4.6-1 will be revised to make consistent with DCD Tier 2 information.

Impact on DCD

DCD Tier 1 Figure 2.4.6-1 will be revised as presented in Attachment.

Impact on PRA

There is no impact on the PRA.

Impact on Technical Specifications

There is no impact on the Technical Specifications.

Impact on Technical/Topical/Environmental Reports

There is no impact on any Technical, Topical, or Environmental Reports.

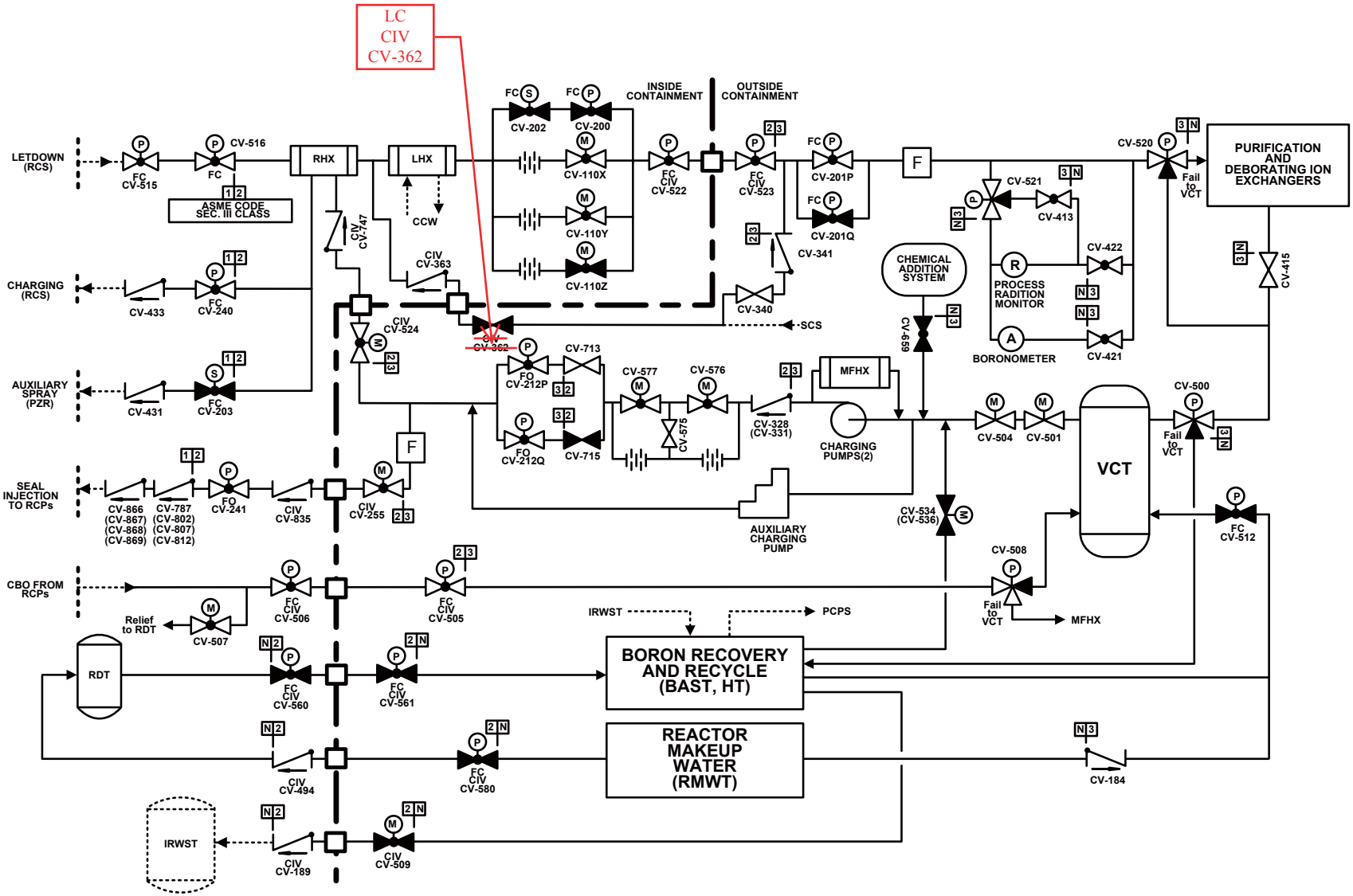

Figure 2.4.6-1 Chemical and Volume Control System