ENT000725
Submitted: October 29, 2015

Westinghouse Non-Proprietary Class 3

WCAP – 14574-A

License Renewal Evaluation: Aging Management Evaluation for Pressurizers

Westinghouse Electric Company LLC

WCAP-14574-A

License Renewal Evaluation: Aging Management Evaluation for Pressurizers

December 2000

R. L. Sylvester

M. A. Gray

Funded by:

Westinghouse Owners Group (WOG)
Life Cycle Management/License Renewal (LCM/LR) Program

Approved: _____
R. Llovet, Westinghouse Program Manager
WOG LCM/LR Program

Prepared by Westinghouse Electric Company for use by Members of the Westinghouse Owners Group.
Work performed in Shop Order MUHP-6118 under direction of the WOG LCM/LR Program Core Group.

WESTINGHOUSE ELECTRIC COMPANY, LLC
P. O. BOX 355
PITTSBURGH, PA 15230-0355

©2000 Westinghouse Electric Company, LLC
All Rights Reserved

UNITED STATES
NUCLEAR REGULATORY COMMISSION
WASHINGTON, D.C. 20555-0001

October 26, 2000

Mr. Roger A. Newton, Chairman
Westinghouse Owners Group
Wisconsin Electric Power Company
231 West Michigan
Milwaukee, Wisconsin 53201

SUBJECT: ACCEPTANCE FOR REFERENCING OF GENERIC LICENSE RENEWAL PROGRAM TOPICAL REPORT ENTITLE, "LICENSE RENEWAL EVALUATION: AGING MANAGEMENT EVALUATION FOR PRESSURIZERS," WCAP-14574, REVISION 0, JULY 1996

Dear Mr. Newton:

The staff of the U.S. Nuclear Regulatory Commission Office of Nuclear Reactor Regulation has reviewed the topical report entitled, "License Renewal Evaluation: Aging Management Evaluation for Pressurizers, WCAP-14574, which Westinghouse Owners Group (WOG) submitted in July 1996 as part of the Generic License Renewal Program (GLRP). The resultant final safety evaluation report (FSER) is transmitted to you as an enclosure to this letter.

As indicated in the FSER, the staff found the topical report acceptable for GLRP members' plants to reference in a license renewal application to the extent specified and under the limitations delineated in the staff FSER and the associated topical report. The limitations include committing to the accepted aging management programs defined in the topical report, and completing the renewal applicant action items described in Section 5.0 of the FSER. An applicant referencing the topical report and meeting these limitations will provide sufficient information for the staff to make a finding that there is reasonable assurance that the applicant will adequately manage the effects of aging so that the intended functions of the pressurizers covered by the scope of the report will be maintained consistent with the current licensing basis during the period of extended operation.

The staff does not intend to repeat its review of the matters described in the report and found acceptable in the FSER when the report appears as a reference in a license renewal application, except to ensure that the material presented applies to the specified plant.

In accordance with the procedures established in NUREG-0390, "Topical Report Review Status," the staff requests that the WOG publish the accepted version of WCAP-14574 within three months after receiving this letter. In addition, the published version will incorporate this letter and the enclosed FSER between the title page and the abstract.

To identify the version of the published topical report that was accepted by the staff, the WOG will include "-A" following the topical report number (e.g., WCAP-14574-A).

Sincerely,

CI Grimes

Christopher I. Grimes, Chief
License Renewal and Standardization Branch
Division of Regulatory Improvement Programs
Office of Nuclear Reactor Regulation

Project No. 686

Enclosure: Final Safety Evaluation Report

cc w/encl: See next page

WESTINGHOUSE OWNERS GROUP (WOG)

Project No. 686

cc: Mr. Gregory D. Robison
Ad Hoc Technical Group Coordinator
LCM/LR Working Group
Duke Power Company
Westinghouse Owners Group
P. O. Box 1006
Charlotte, NC 28201

Mr. Summer R. Bemis
Westinghouse Owners Group Project Office
Westinghouse Electric Corporation, ECE 5-16
P. O. Box 355
Pittsburgh, PA 15230-0355

Mr. Theodore A. Meyer
Westinghouse Program Manager for WOG LCM/LR Program
Westinghouse Electric Corporation, ECE 4-22
P. O. Box 355
Pittsburgh, PA 15230-0355

Mr. Charlie Meyer
Westinghouse Lead Engineer for WOC LCM/LR Program
Westinghouse Electric Corporation, ECE 4-8
P. O. Box 355
Pittsburgh, PA 15230-0355

Douglas J. Walters
Nuclear Energy Institute
776 I Street, NW
Suite 400
Washington, DC 20006-3708

TABLE OF CONTENTS

1.0 INTRODUCTION 1
1.1 Westinghouse Owners Group Topical Report 2
1.2 Conduct of Staff Review 2

2.0 SUMMARY OF TOPICAL REPORT 3
2.1 Report Overview 3
2.2 Components and Intended Functions 3
2.3 Effects of Aging 5
2.3.1 Identification of the Effects of Aging 5
2.3.2 Review of Aging Effects Operating Experience 6
2.4 Aging Management Programs 6
2.4.1 Aging Management Programs for Managing Stress Corrosion Cracking 8
2.4.2 Additional Activities and Program Attributes for Management of Fatigue 9
2.4.2.1 Aging Management Program 2.2 9
2.4.2.2 Aging Management Program 2.3 9
2.4.2.3 Proposed Industry Position on Fatigue Evaluation for License Renewal 10
2.4.2.4 Environmental Effects on Fatigue 11
2.5 Time-Limited Aging Analyses 11
2.5.1 Overview of the TLAA for Fatigue 12
2.5.2 Transient Loading not Included in the Current Licensing Basis 13
2.5.2.1 Insurge and Outsurge Transients 13
2.5.2.2 Additional Non-Design Basis Transients 14

3.0 STAFF EVALUATION 14
3.1 Components and Intended Functions 15
3.2 Effects of Aging 18
3.2.1 Evaluation of WOG's Aging Assessment for the Effects of Fatigue . . . 19
3.2.2 Evaluation of WOG's Aging Assessment for the Effects of Corrosion . 21
3.2.2.1 General Corrosion, Pitting, Crevice Corrosion, and Boric Acid 21

3.2.2.2 Stress Corrosion Cracking 23
3.2.3 Evaluation of WOG's Aging Assessment for the Effects of Irradiation Embrittlement 26
3.2.4 Evaluation of WOG's Aging Assessment for the Effects of Thermal Aging 26
3.2.5 Evaluation of WOG's Aging Assessment for the Effects of Erosion and Flow-Assisted Corrosion (Erosion/Corrosion) 28
3.2.6 Evaluation of WOG's Aging Assessment 29
3.2.7 Evaluation of WOG's Aging Assessment for the Effects of Creep and Stress Relaxation 30
3.2.7.1 Creep 30
3.2.7.2 Stress Relaxation 30
3.3 Assessment of Aging Management Activities and Program Attributes 31
3.3.1 Aging Management for Fatigue 31
3.3.1.1 Aging Management Programs 31
3.3.1.2 Proposed Industry Position on Fatigue Evaluation for License Renewal 34
3.3.1.3 Aging Management for Pressurizer Thermal Sleeves 36
3.3.1.4 Environmental Effects on ASME Section III Fatigue Design Curves 36
3.3.2 Aging Management for Forms of Corrosion 38
3.3.2.1 General Corrosion and Boric Acid Corrosion 38
3.3.2.2 Aging Management Programs for Stress Corrosion Cracking . 40
3.3.3 Aging Management for the Effects of Irradiation Embrittlement 46
3.3.4 Aging Management for the Effects of Thermal Embrittlement 47
3.3.5 Aging Management for the Effects of Erosion and Erosion/Corrosion . 47
3.3.6 Aging Management for the Effects of Wear 48
3.3.7 Aging Management for the Effects of Creep and Stress Relaxation . . . 48
3.3.7.1 Aging Management for Creep 48
3.3.7.2 Aging Management for Stress Relaxation 48

4.0 CONCLUSIONS 49
4.1 Conclusion for Aging Management Programs for Fatigue 49

4.2 Conclusion for Aging Management for Other Forms of Age-related Degradation 49

5.0 RENEWAL APPLICANT ACTION ITEMS 51

5.1 Renewal Applicant Action Items for the Management of Fatigue 51

5.2 Renewal Applicant Action Items for Aging Management Programs of Other Aging Effects 51

6.0 REFERENCES 55

FINAL SAFETY EVALUATION

BY THE OFFICE OF NUCLEAR REACTOR REGULATION

CONCERNING

WESTINGHOUSE OWNERS GROUP TOPICAL REPORT
WCAP–14574

"LICENSE RENEWAL EVALUATION: AGING MANAGEMENT EVALUATION FOR PRESSURIZERS"

FINAL SAFETY EVALUATION

BY THE OFFICE OF NUCLEAR REACTOR REGULATION

CONCERNING

WESTINGHOUSE OWNERS GROUP TOPICAL REPORT
WCAP–14574

"LICENSE RENEWAL EVALUATION: AGING MANAGEMENT EVALUATION FOR PRESSURIZERS"

PROJECT NO. 686

1.0 INTRODUCTION

Pursuant to Section 50.51 of Title 10 of the *Code of Federal Regulations* (10 CFR 50.51), licenses to operate nuclear power plants are issued by the U.S. Nuclear Regulatory Commission (NRC) for a fixed period of time not to exceed 40 years. However, these licenses may be renewed by the NRC for a fixed period of time, including a period not to exceed 20 years beyond expiration of the current operating license term. The Commission's regulations in 10 CFR Part 54 (60 FR 22461), published on May 8, 1995, set forth the requirements for the renewal of operating licenses for commercial nuclear power plants (Reference 1).

Applicants for license renewal are required by the license renewal rule to perform an integrated plant assessment (IPA). The first step of the IPA, 10 CFR 54.21(a)(1), requires the applicant to identify and list structures and components that are subject to an aging management review (AMR); 10 CFR 54.21(a)(2) requires the applicant to describe and justify the methods used in meeting the requirements of 10 CFR 54.21(a)(1); and 10 CFR 54.21(a)(3) requires that for each structure and component identified in 10 CFR 54.21(a)(1), the applicant demonstrates that the effects of aging will be adequately managed so that the intended function(s) will be maintained consistent with the current licensing basis (CLB) for the period of extended

operation. Furthermore, the applicant must provide an evaluation of time-limited aging analyses (TLAAs) as required by 10 CFR 54.21(c), including a list of TLAAs, as defined in 10 CFR 54.3.

1.1 Westinghouse Owners Group Topical Report

By letter dated July 3, 1996, the Westinghouse Owners Group (WOG) submitted topical report WCAP–14574, "License Renewal Evaluation: Aging Management Evaluation for Pressurizers" (Reference 2), for staff review and approval. The focus of the report is on the management of the effects of aging of pressurizers and their components during any extended period of operation.

The WOG report evaluated the aging management of the pressurizers for domestic commercial nuclear power plants with a Westinghouse nuclear steam supply system. The objectives of the topical report are to

- Identify and evaluate aging effects that degrade intended functions.
- Identify and evaluate TLAAs.
- Provide options, in terms of activities and program attributes, to manage the aging effects identified in the topical report.

1.2 Conduct of Staff Review

The staff reviewed the report to determine whether the requirements set forth in 10 CFR 54.21(a)(3) can be met. On January 14, 1997, the staff issued a request for additional information (RAI) after completing its initial review of WCAP–14574. WOG responded to the staff's RAI on May 30, 1997. This safety evaluation includes the staff's assessments of WOG's response to the individual items in the RAI.

2.0 SUMMARY OF TOPICAL REPORT

2.1 Report Overview

WCAP–14574 is broken down into the following Chapters (Sections):

- Chapter 1.0, Introduction
- Chapter 2.0, Identification of Time-Limited Aging Analyses and Aging Effects
- Chapter 3.0, Aging Management Review
- Chapter 4.0, Aging Management Activities and Program Attributes
- Chapter 5.0, Summary and Conclusion

WCAP–14574 is applicable to the evaluation of pressurizers in all domestic Westinghouse facilities; these facilities are provided in Table 1–1 of WCAP–14574. The report contains a generic overview of the methods to manage the effects of age-related degradation of pressurizers in Westinghouse-designed reactors so that the intended safety and safe shutdown functions of the systems, structures, and components (SSCs) in the pressurizer will be maintained for the period of extended operation.

The report also identified those aging management programs (AMPs) and TLAAs, as defined in 10 CFR 54.3, that are applicable to these reactor components.

2.2 Components and Intended Functions

In Chapter 1.0 of the WCAP, WOG defined SSC as subject to an aging management review if the SSC: "(1) perform an intended safety function, (2) perform an intended safety function in a passive manner, or (3) have a long structural life." In Chapter 1.0, WOG states that the pressurizer and its subcomponents are within the scope of the license renewal rule.

In Section 2.1 of the WCAP, WOG states that the pressurizer is part of the reactor coolant system (RCS), and that the intended function of the pressurizer for the plant is to maintain the reactor coolant pressure boundary as defined in 10 CFR 54.4(a)(1)(i).

WOG also indicated that the pressurizer serves to limit to an allowable range those pressure

changes that are caused by reactor coolant thermal expansion and contraction during normal plant load changes. However, WOG indicated that this is a secondary power generation function for the pressurizer and did not identify this function as covered under the scope of 10 CFR Part 54.

Table 1–2 of WCAP–14574 lists the pressurizer components that are covered under the scope of the report. Section 2.2 of the report states that the pressurizer is a long-lived, passive component of the RCS, and identifies the subcomponents in the pressurizer that specifically serve to support the pressure boundary function of the pressurizer; these components are also identified in Table 2–1 of the WCAP. Table 2–1 of the report then breaks down these components into those that fall within the scope of license renewal and those that do not. The pressurizer components that are considered by WOG to fall within the scope of license renewal are:

- Pressurizer shell and upper and lower heads.
- Pressurizer support skirt and flange.
- Surge nozzle (including surge nozzle thermal sleeve and safe-end, but excluding the surge nozzle retaining basket).
- Spray nozzle (including the thermal sleeve and safe-end, but excluding the spray head, spray head coupling, and spray head locking bar).
- Relief nozzle (including the safe-end).
- Instrument nozzles.
- Heater well nozzles.
- Immersion heaters.
- Seismic lugs and valve support bracket lugs.
- Manway and its subcomponents (including the manway cover, cover bolts and studs, and pad gasket seating surface, but excluding the manway gasket).

The pressurizer vessel nozzles include the attached safe-ends and weld material between the safe-ends and the nozzles. The pressurizer components that are not considered by WOG to fall within the scope of license renewal include: manway gasket, surge nozzle retaining basket, heater support plates, heater support plate brackets, heater support plate bracket bolts, spray head, spray head locking bar, and spray head coupling. WOG states that these components do not serve the function of maintaining the integrity of the primary pressure boundary and therefore do not fall within the scope of license renewal.

Section 2.3 of the WCAP summarized how the subcomponents identified in Table 2–1 were fabricated and constructed in the plant design. Section 2.4 of the WCAP prescribed applicable engineering and design data that are applicable to the designs of Westinghouse-designed pressurizers. The staff's evaluation of WOG's discussion of the pressurizer components and their associated safety and safe-shutdown functions is addressed in Subsection 3.1 of the Evaluation Section (Section 3.0) of this Safety Evaluation Report (SER).

2.3 Effects of Aging

2.3.1 Identification of the Effects of Aging

Section 2.7 of the WCAP defines aging as the time-dependent degradation of a material or component, that results in a decrease in the ability of the material or component to perform its intended design function. The section identifies the age-related degradation mechanisms for the pressurizer and its components in the following categories:

- Fatigue.
- Corrosion/stress corrosion cracking/primary water stress corrosion cracking (PWSCC).
- Irradiation embrittlement.
- Thermal aging.
- Erosion and erosion-corrosion (e.g., flow-assisted corrosion).
- Degradation by wear.
- Creep and stress relaxation.

2.3.2 Review of Aging Effects Operating Experience

Section 2.6 of WCAP summarizes WOG's review of the operating experience that has affected the structural integrity of pressurizers in the nuclear industry in the past. Briefly, the report identifies the following operating experience and aging history applicable to industry pressurizers:

- Fatigue in the lower head and surge nozzles from reactor coolant insurge and outsurge transients.
- Primary stress corrosion cracking of Alloy 600 materials in the primary system.
- Cracking of pressurizer vessel cladding (e.g., the Haddam Neck issue).
- Instrument nozzle cracking.

In addition, WOG also identified the following maintenance issues that have affected pressurizer components:

- Damage to immersion heater ceramic seals and elements.
- Leaking at the manway gasket seal.

Details of WOG's assessment of applicable industry experience are provided in Sections 2.6.1 through 2.6.7 of WCAP–14574. The staff's evaluation of WOG's identification of the applicable aging effects for the pressurizer components and WOG's assessment of the industry experience is contained in Subsection 3.2 to the Staff Evaluation section (Section 3.0) of this SER.

2.4 Aging Management Programs

In Chapter 3.0 of WCAP–14754, WOG identifies the basis for determining whether programs are necessary to manage each of the aging mechanisms identified in Section 2.7 of the report. WOG described the aging mechanism and then evaluated whether the aging mechanism is applicable to the pressurizer subcomponents, and whether it would be necessary for a WOG member to implement an AMP to control the aging mechanism during the extended period of licensed operation. WOG defines an aging effect for a pressurizer component as significant if,

when allowed to continue without an effective management program, the capability of the component to perform its intended function during the extended period of operation would be compromised. WOG assessed the effects of potentially significant aging mechanisms in terms of the capability of the following licensee-implemented programs to manage the aging effects during the period of extended operation:

- Maintenance programs.
- Inservice inspection programs.
- Surveillance and testing programs.
- Programs for conducting analytical assessments of aging effects.

The following subsections to Chapter 3.0 of the WCAP present the details of WOG's assessments of potentially significant aging mechanisms and their resulting effects on the pressurizer components:

- Section 3.1 - Assessment of potentially significant effects by fatigue
- Section 3.2 - Assessment of potentially significant effects from corrosion or stress corrosion cracking
- Section 3.3 - Assessment of potentially significant effects by irradiation embrittlement
- Section 3.4 - Assessment of potentially significant effects from thermal aging
- Section 3.5 - Assessment of potentially significant effects by erosion and erosion/corrosion
- Section 3.6 - Assessment of potentially significant effects by wear
- Section 3.7 - Assessment of potentially significant effects from creep or stress relaxation

Table 3.2 and Section 3.9 to Chapter 3.0 of the WCAP summarize the conclusions from WOG's aging effect evaluations. WOG concluded that most of the potential aging affects identified in Section 2.7 of the WCAP and discussed in Sections 3.1 through 3.7 of the WCAP will have little or no impact on the intended function of maintaining the structural integrity of the reactor coolant pressure boundary (RCPB). Of these effects, WOG identified the only aging

mechanisms that have the potential to impact the pressurizer components and the structural integrity of the RCPB as:

- Fatigue of the upper portion of the pressurizer shell, the spray nozzle, the manway bolts, the seismic support lugs, the lower head (due to insurge/outsurge transients), the heater wells (due to insurge/outsurge transients), the surge nozzle, and the support skirt and flange.

- Stress corrosion cracking (SCC) of potentially sensitized stainless steel safe-ends and stainless steel weld metal.

- PWSCC of Inconel 82/182 weld metal in pressurizer safety, relief, spray, and surge nozzles.

Thus, WOG identified stress corrosion cracking and fatigue as the only potential aging degradation mechanisms that could affect the pressurizer pressure boundary. In accordance with 10 CFR 54.21(a)(1), WOG also identified and listed in Table 2–1 of the report the subcomponents within the pressurizer pressure boundary that may experience fatigue damage during the period of extended operation, thus requiring aging management. A summary of specific programs for managing the effects of aging during the period of extended operation to maintain the functionality of the pressurizer components is provided in Chapter 4.0 of the report. Generic program attributes are shown in Table 4.1 of the report, applicable to specific AMPs. The report states that plant-specific details will be developed during the preparation of license renewal applications. Section 4.1 of the report provides the recommended WOG aging management activities and program attributes for managing SCC and PWSCC of Westinghouse-designed pressurizer subcomponents during the extended operating term. Section 4.2 of the report provides WOG aging management activities and program attributes for managing fatigue of the subcomponents during the extended operating term; this program is discussed further in the subsections to Section 2.4 that follow.

2.4.1 Aging Management Programs for Managing Stress Corrosion Cracking

Section 4.1 and AMP–2.1 (Table 4–2) provide descriptions and summaries of WOG-proposed program activities and attributes to manage SCC in pressurizer components that have been identified as being susceptible to SCC. The staff's evaluation of Section 4.1 and AMP–2.1 is given in Section 3.3.2.2 of this SER.

2.4.2 Additional Activities and Program Attributes for Management of Fatigue

The following AMPs have been proposed in Section 4.2 of the report to manage fatigue of pressurizer subcomponents.

2.4.2.1 Aging Management Program 2.2

AMP–2.2 (Table 4–3) is applicable to subcomponents for which the adequacy of the CLB fatigue design basis through the license renewal term will be demonstrated, in accordance with 10 CFR 54.21(c)(1)(i), by showing that the TLAAs of these subcomponents remain valid for the period of extended operation. The TLAAs will be reevaluated, on a one-time basis, by removing excess conservatism from the fatigue calculations and demonstrating acceptable fatigue usage for the license renewal period. The table identifies the pressurizer shell, the manway bolts, and the seismic support lugs as subcomponents for which the AMP would be applicable. The fatigue evaluation will be based on an acceptable cumulative usage factor (CUF) criterion (or equivalent) for the life of the plant, including the license renewal period. This CUF criterion was not specified.

2.4.2.2 Aging Management Program 2.3

AMP–2.3 (Table 4–4) is intended for those subcomponents subjected to transient cycling, such as the insurge/outsurge and other transients. Fatigue will be managed by reevaluation of the TLAAs. The reevaluation will be based on transient cycle monitoring and modifying operating procedures during plant operation of the subcomponents for the license renewal period. The approach is based on reducing conservatisms in the TLAAs and using actual operating cycle counts, including those due to insurge/outsurge and other transients. This AMP is intended for the following subcomponents: the spray nozzle and safe-end, the support skirt and flange, the lower head, the heater well, and the surge nozzle and safe-end. The acceptance criterion consists of an (unspecified) acceptable CUF (or equivalent) for plant life, including the license renewal period. Alternatively, if the TLAAs cannot show acceptable usage for the license renewal period, the fatigue adequacy will be met by implementing a repair or replacement program of the subcomponents, per American Society for Mechanical Engineers (ASME), Section XI, IWA–4000, or IWA–7000. Such a program may also be implemented where economically justified.

2.4.2.3 Proposed Industry Position on Fatigue Evaluation for License Renewal

WOG has also proposed an industry initiative, *Proposed Industry Position on Fatigue Evaluation for License Renewal*, as an alternative fatigue AMP for WOG pressurizers. This position was proposed as a broad-based general approach to fatigue management and as an acceptable alternative to the NRC position on fatigue, which addresses the concerns of Generic Safety Issue-166 (GSI), *Adequacy of Fatigue Life of Metal Components*, as noted in SECY 95–245 *Completion of the Fatigue Action Plan.*

The position initially determines if the current and projected transients are within the CLB by comparing the current and projected transients with the CLB design transients. If the current and projected transients are within the CLB design transients, the effects of fatigue are considered adequately managed by demonstrating that the CLB fatigue evaluation is valid for the license renewal period.

If it is found that the current and projected transients are not within the design transients, the position offers the following options:

- Determine if the existing inservice inspection (ISI) programs can manage the effects of fatigue for the license renewal term.

- Determine if augmented ISI programs will manage the effects of fatigue for the license renewal term in accessible locations, considering the flaw tolerance approach plus local inspection procedures, as described in the nonmandatory Section XI Appendix for evaluation of fatigue in operating plants. This option will therefore require staff approval on a case-by-case basis.

- Recalculate Class 1 fatigue usage for license renewal term transients by removing actual and perceived conservatisms from the fatigue calculations and using realistic operational transients, and show that the CLB acceptance criteria are met for the life of the plant, including the license renewal period.

- Repair or replace the subcomponent.

The position also specifies that the flaw tolerance and the fatigue usage recalculations should consider appropriate environmental factors on fatigue crack initiation or growth, consistent with criteria to be established by the NRC for license renewal.

2.4.2.4 Environmental Effects on Fatigue

The report assesses the potential impact of environmental effects on WOG pressurizers, using the Pressure Vessel Research Council (PVRC) approach for environmental effects on fatigue. This approach consists of specifying certain multiplicative factors applied to the ASME design fatigue curves, and a number of screening criteria that indicate when environmental effects will not be significant. These criteria are listed in Table 4–6 of the report and are applicable to carbon and low-alloy steels only. However, the report concludes that, based on an evaluation of PVRC data for stainless steel, these criteria are also applicable to the pressurizer materials in contact with the water, stainless steel, and Inconel. The report also concludes that, based on the PVRC data, it does not appear that environmental effects on fatigue will be a significant issue for WOG pressurizers.

2.5 Time-Limited Aging Analyses

Section 2.5 of WCAP–14574 discusses WOG's assessment of TLAAs that are required to be reevaluated for the pressurizer components during proposed extended operating terms. WOG defines TLAAs to be licensee calculations that:

- Involve the effects of aging.
- Involve time-limited assumptions defined by the current operating term, for example, 40 years.
- Involve SSC within the scope of license renewal.
- Involve conclusions or provide the basis for conclusions related to the capability of the SSC to perform intended functions.
- Were determined to be relevant by the licensee in making a safety determination.

- Are contained or incorporated by reference in the current licensing basis.

WOG definitions for TLAAs are consistent with those defined in 10 CFR 54.3. Of the aging mechanisms identified in Section 2.7 of the WCAP, WOG identified that the only mechanism that meets all six TLAA definition criteria is fatigue. WOG's TLAA for fatigue in the pressurizer components is further discussed in the subsections to 2.5 below.

2.5.1 Overview of the TLAA for Fatigue

In accordance with 10 CFR 54.3, WOG identified the CLB fatigue analyses of pressurizer subcomponents under ASME Section III Service Level A and B transient conditions as TLAAs.

WOG pressurizers are analyzed in accordance with the rules for Class 1 components in the ASME Boiler and Pressure Vessel Code, Section III, (ASME Section III) Subsection NB, subject to various combinations of internal pressure, dead weight, and other sustained loads, and thermal, seismic, and other transient loads during normal, upset, and test plant operating conditions. These analyses are also based on the current ASME Section III fatigue design curves, and are subject to the ASME Section III Class 1 design limit (fatigue CUF $\leq$ 1.0, over the operating life of the plant).

Tables 2–5 and 2–8 of the report show representative WOG Service Level A, B, and Test transient cyclic conditions over a 40-year operating term, typical of WOG design specifications. Representative external load combinations are shown in Table 2–9 of the report.

Table 2–10 of the report lists representative calculated fatigue design CUFs of 15 pressurizer subcomponents identified as subject to potential fatigue degradation, based on the representative transient loading conditions described in Westinghouse system standards and design specifications. Based on a 40-year operating period, the design CUFs of these subcomponents were shown to be less than 1.0, in accordance with the CLBs of the plants. By using linear extrapolation of the CUFs to 1.0 as a screening method, under the same representative design conditions, WOG determined that six subcomponents would attain the design CUF of 1.0 prior to 60 years of operation, without any additional evaluation or management. These subcomponents, and their projected fatigue service life (in years), were identified as follows: the pressurizer shell (44 years), the spray nozzle (49 years), the manway

bolts (46 years), the seismic support lugs (41 years), the surge nozzle (42 years), and the support skirt and flange (skirt-to-lower-head weld, 54 years).

In a letter dated May 6, 1997, the staff requested that the CUFs be reevaluated by considering environmental effects on the design fatigue curves. In a letter dated May 30, 1997, WOG identified the following additional components that will attain a design CUF of 1.0 prior to 60 years of operation: the lower head (42 years), the safety and relief nozzle (53 years), and the instrument nozzles (51 years). The staff discussion of WOG's May 30, 1997, response is in Section 3.3.1.2 of this SER.

2.5.2 Transient Loading not Included in the Current Licensing Basis

2.5.2.1 Insurge and Outsurge Transients

One of the postulated transient conditions in the design basis analysis of WOG pressurizers is based on the assumption that surge line flows resulted only from operation of the pressurizer spray line. It was also assumed that spray actuation resulted in flow from the pressurizer into the surge line and eventually to the RCS hot leg.

In Sections 2.6.1 and 3.8.4, "Pressurizer Insurge and Outsurge Transients," of the report, WOG identified thermal transients currently being experienced in WOG pressurizers, consisting of rapid reactor coolant insurge and outsurge events in the lower head and the surge nozzle. These insurges and outsurges are flows into and out of the pressurizer and the hot leg through the surge line.

During plant heatup and cooldown, the temperature difference between the hot leg and the pressurizer can exceed 300°F, and the thermal loading resulting from the inflow or outflow occurs at a rapid rate (approaching a step change). These transients were not considered in the design basis of WOG pressurizers. WOG therefore concluded that, when insurge/outsurge thermal transients are included in the fatigue analysis of the lower head and the heater well, a CUF > 1.0 will be attained in less than 60 years. No projected fatigue service years for these subcomponents were given in the report. As stated above, the lower head was also identified as fatigue sensitive because of the environmental effects on the design fatigue curves.

Section 2.6.1 of the report describes WOG's program, "Mitigation and Evaluation of Thermal Transients Caused by Insurges and Outsurges," MUHP–5060/5061/5062, initiated to address this issue. The main objective of this program is to develop and evaluate generic operational strategies to mitigate or eliminate the effects of these transients. The program was scheduled to be completed by the second quarter of 1997. In a letter dated May 6, 1997, the staff requested additional information and background on the program. WOG stated that a final report describing options for modified operations to mitigate pressurizer insurge/outsurge events, and associated design transients, was anticipated to be issued by WOG by the end of 1997. WOG has not provided additional information regarding this program.

2.5.2.2 Additional Non-Design Basis Transients

Section 3.8.3 of the report stated that additional operating transients had been imposed on pressurizer subcomponents in some plants that had been operating for some time. These transients were classified into two categories:

Off normal transients: These are random transients that were not part of the design-basis transients. The effects of these transients were evaluated on a case-by-case basis for plants where they have been discovered by comparing to technical specification heatup and cooldown limits. The time-temperature history for these transients was not provided and the evaluations were not reported.

Additional transients: Some older plants added design transients specified for newer plants. The examples quoted in the report pertain to cold overpressure mitigation system transients. The report does not identify these older plants, nor has it provided information regarding the inclusion of these transients in the plant heat transfer, stress, and fatigue design calculations.

3.0 STAFF EVALUATION

The staff reviewed the report and additional information submitted by WOG to determine if it demonstrated that the effects of aging of the pressurizer components covered by this report will be adequately managed so that applicants can refer to the report as the basis for indicating that the intended function(s) will be maintained during the extended operating period consistent with

the CLB and the requirements of 10 CFR 54.21(a)(3). This is the last step in the IPA described in 10 CFR 54.21(a). In addition to the IPA, Part 54 requires an evaluation of TLAAs in accordance with 10 CFR 54.21(c). WOG's method for addressing aging of pressurizer subcomponents is summarized in the items listed below:

(1) WOG identification of pressurizer subcomponents and their intended functions.

(2) WOG identification of the aging mechanisms and TLAAs that are applicable to Westinghouse-designed pressurizers as a whole.

(3) WOG assessment of whether the identified aging mechanisms and TLAAs are sufficiently significant to warrant an AMP.

(4) WOG assessment of the attributes that are necessary to be incorporated into programs for managing aging mechanisms that have been identified by WOG as being significant enough to affect the intended functions of the pressurizer components during the term of extended operation.

The staff's assessment of Item (1) above is provided in Section 3.1 of this SER. The staff's assessment of Item (2) above is provided in Section 3.2 of this SER. The staff's assessment of Items (3) and (4) is provided in Section 3.3 of this SER.

Furthermore, on January 14, 1997, the staff requested additional information from WOG in regard to the contents of WCAP–14574. WOG responded to these requests for additional information by letter dated May 30, 1997. The staff's evaluation in Sections 3.1, 3.2, and 3.3 of this SER addresses the staff's assessment of WOG's responses to these RAIs.

3.1 Components and Intended Functions

Detailed descriptions of all applicable Westinghouse-designed pressurizers, including their dimensions and components, are listed and summarized in Section 2.3 of the report as well as in Table 1–2 and Figure 1–1 of the report. As described in the report, the pressurizer is part of the RCS and is located inside containment. The RCS pressure control system consists of the pressurizer vessel equipped with electric heaters, safety valves, relief valves, spray system,

interconnecting piping, and instrumentation. In operation, the pressurizer contains water and steam maintained at the desired saturation temperature and pressure by the electric heaters and the spray system. The chemical and volume control system maintains the desired water level in the pressurizer during steady-state operation.

During normal operation, the external electrical network imposes load changes on the plant turbine generator. These load changes cause temperature changes in the RCS. Since the RCS, which controls the reactor coolant temperature, does not respond instantaneously during a load transient, the pressure control system is designed to absorb the reactor coolant volume surges and limit pressure variations during the initial transient period prior to an effective response by the RCS. During volume insurges that cause pressure increases, the spray system injects subcooled water into the pressurizer steam volume to condense steam and prevent further pressure increases. During volume outsurges that cause pressure decreases, flashing of saturated water in the pressurizer and the generation of steam by immersion heater operation maintains the pressure above a minimum value fixed by reactor core heat transfer design and safety requirements. Self-actuated safety valves are provided to accommodate large volume insurges beyond the pressure-limiting capacity of the pressurizer and spray system. The safety valves are capable of handling the most severe volume insurge transient. In addition, power-operated relief valves are set to open at a slightly lower pressure to minimize use of the safety valves.

In Section 2.2 of the topical report, WOG identified the following intended function for the pressurizer and system components based on the requirements of 10 CFR 54.4(a):

- To maintain the reactor coolant pressure boundary [as defined in 10 CFR 54.4(a)(1)(i)].

Based on the intended function set forth above, WOG identified the following structures and components of the pressurizer that were identified in the report to be within the scope of license renewal, and that would require an aging management review: lower head, surge nozzle, surge nozzle safe-end, surge nozzle thermal sleeve, heater well nozzle, immersion heaters, support skirt and flange, shell, seismic lugs, valve support bracket lugs, instrument nozzles, upper head, spray nozzle, spray nozzle safe-end, spray nozzle thermal sleeve, safety and relief nozzle, safety and relief nozzle safe-end, manway cover. manway cover bolts/studs, and manway pad gasket seating surface.

The report also identified components of the pressurizer that do not fall under the scope of license renewal and do not require an AMR. These components include the manway gasket, the surge nozzle retaining basket, heater support plates, heater support plate brackets, heater support plate bracket bolts, spray head locking bar, spray head, and spray head coupling. The manway gasket is not part of the pressure boundary and is a replaceable component, therefore, it is not subject to AMR. The surge nozzle retaining basket, heater support plates, heater support plate bracket, heater support plate bracket bolts, spray head locking bar, spray head, and spray head coupling are not within the scope of license renewal because they do not act as a pressure boundary for the reactor coolant.

The staff reviewed Sections 1.0 and 2.0 of the subject topical report to determine whether the WOG had properly identified the SSCs within the scope of license renewal and subject to an AMR, pursuant to 10 CFR 54.4(a) and 10 CFR 54.21(a)(1). To accomplish this, the staff reviewed portions of representative updated final safety analysis reports (i.e., the UFSARs for Surry and Calvert Cliffs) for the pressurizer and compared the information in the UFSARs with the scoping information in the WOG report. The review of Surry's UFSAR was added to the evaluation because it has a Westinghouse-designed pressurizer. Since no applicant with a Westinghouse-designed pressurizer has submitted an FSAR update for license renewal, the staff also reviewed the Calvert Cliffs UFSAR because the UFSAR was updated for license renewal, the plant design is "similar" to those designed by Westinghouse, and the scoping methodology had been reviewed by staff. The staff then reviewed structures and components outside the portion identified in the report, and as described below, requested WOG to provide additional information and/or clarifications for a selected number of structures and components to verify that (1) they do not have any intended functions as delineated in 10 CFR 54.4(a) and if they do, to verify that (2) they are either active components, or they are subject to replacement based on a qualified life or specified time period, as described in 10 CFR 54.21(a)(1). The staff also reviewed the UFSARs for any safety-related system functions that were not identified as intended functions in the report to verify that all structures and components having intended functions were not omitted from consideration within the scope of the rule.

After completing the initial review, the staff requested WOG to verify whether any of the applicable plants rely on the RCS pressure control function of the pressurizer to prevent or mitigate the consequences of design-basis events. This additional information from WOG was requested to verify that components such as the spray head, which sprays subcooled water

inside the pressurizer to control RCS pressure, were appropriately excluded from the AMR. In a conference call on June 25, 1999, WOG confirmed that none of the applicable plants rely on the RCS pressure control function of the pressurizer to prevent or mitigate the consequences of design-basis events, and therefore the passive and long-lived components (e.g., spray head) that perform the pressure control function, but do not perform the pressure boundary function, need not be within the scope of license renewal, nor be subject to an AMR according to the regulations. The staff agrees with this conclusion.

In RAI Item No. 9, the staff informed WOG that 10 CFR 54.21(a)(1)(ii) requires structures and components not subject to replacement based on a qualified life or specified time period to be subject to an AMP. With respect to this requirement, the staff inquired whether the pressurizer manway gaskets were among those components that fall within the scope of 10 CFR 54.21(a)(1)(ii), and whether a program would be needed to manage aging of the gaskets. In its response to the RAI, WOG stated that the manway gaskets were not within the scope of license renewal. WOG indicated that the pressurizer manway gaskets are required to be replaced every time the manway is opened, but also indicated that failure of the gaskets between periods of maintenance could result in leakage from the gasket. However, the gaskets are not defined as pressure boundary components. The staff's assessment of whether an AMP is necessary to manage leakage from the manway gaskets is discussed in Section 3.3.2.1 of this report.

On the basis of the staff's review of the information provided in Sections 1.0 and 2.0 of the report, the supporting information in the UFSARs, and WOG's response to the staff's RAI as discussed above, the staff did not find any omissions in the report. Therefore, the staff concludes that there is reasonable assurance that the report adequately identified those portions of the pressurizer and its associated (supporting) structures and components that fall within the scope of license renewal and are subject to an AMR, in accordance with 10 CFR 54.4(a) and 10 CFR 54.21(a)(1).

3.2 Effects of Aging

In Section 2.7 to Chapter 2.0 of the WCAP, WOG identifies that age-related degradation (aging) mechanisms for the pressurizer and its subcomponents may be grouped into the following general categories: (1) fatigue, (2) corrosion, stress corrosion cracking, and primary water stress corrosion cracking, (3) irradiation embrittlement, (4) thermal aging, (5) erosion and

erosion/corrosion (flow-assisted corrosion), (6) degradation by wear, and (7) creep and stress relaxation. In Chapter 3.0 of the report, WOG follows up by presenting a general assessment of each aging mechanism. This assessment is accomplished by: (1) providing a general description of the aging mechanism, (2) conducting an evaluation of the aging mechanism as it relates to the pressurizer and its components, and (3) making a final determination as to whether the aging mechanism needs to be managed for any of the pressurizer subcomponents. A discussion of the specific aging effects and various pressurizer components that may be affected by the aging effects is provided below.

3.2.1 Evaluation of WOG's Aging Assessment for the Effects of Fatigue

WOG performed an initial screening, based on simple extrapolation, of 15 pressurizer subcomponents with CLB fatigue analyses. Six of these were identified where the CUFs can be expected to exceed the ASME Section III criterion of 1.0 prior to the end of the extended period of operation.

The report indicates that the seismic support lugs in the upper portion of the pressurizer have the shortest projected fatigue service life, 41 years. Likewise, the shell has a projected fatigue service life of 44 years. This has been attributed to thermal stresses in the pressurizer shell at the location of the support lugs, resulting from spray impingement on the shell. The report states that this condition is not as severe as originally analyzed, and that a reanalysis would show a considerable reduction in fatigue usage. The projected fatigue service life of the spray nozzle is 49 years, and is attributed to alternating thermal conditions caused by cycling between a saturated steam and subcooled water environments. The manway bolts also have a projected fatigue service life of 46 years, attributed to differential movements of the pad and cover during heatup and cooldown, which were analyzed with conservative assumptions. The report states that a new analysis of the bolts with more appropriate boundary conditions would reduce the calculated fatigue usage. It also states that another option would be replacement at regular intervals. The staff finds that replacing bolts is an acceptable option because the new bolts would not have accumulated fatigue usage.

In the lower portion of the pressurizer, the report indicates that the surge nozzle has a projected fatigue service life of 42 years. This was attributed to thermal loading caused by insurge and outsurge thermal shocks due to stratification in the surge line during plant operation. Likewise

the skirt-to-lower-head weld in the support skirt and flange has a projected fatigue service life of 54 years. The report states that a new analysis of this weld, using appropriate boundary conditions, would reduce the calculated fatigue usage.

The CLB fatigue usage calculations were based on the ASME Section III design fatigue curves that did not consider environmental effects. By letter dated January 14, 1997, the staff requested that WOG reevaluate the initial screening of the subcomponents, based on the consideration of environmental effects on the design fatigue curves. By letter dated May 30, 1997, WOG reevaluated the usage factors of those subcomponents that were initially found to have a projected fatigue service life greater than 60 years. The reevaluation showed that three additional subcomponents would have a projected fatigue life less than 60 years. The projected fatigue life for the safety and relief nozzles, located in the upper portion of the pressurizer, is 53 years. The projected fatigue life for the lower head is 42 years, and the projected fatigue life for the instrument nozzles, located in the lower portion of the pressurizer, is 51 years. WOG did not reevaluate those subcomponents that had initially been shown to have projected fatigue lives less than 60 years, since these had already been identified as such.

WOG's reevaluation was based on the results of fatigue calculations reported in NUREG/CR–6260 for the surge line hot nozzle safe-end of an older vintage Westinghouse plant, based on revised interim fatigue design curves proposed in NUREG/CR–5999. WOG's reevaluation was based on a multiplicative factor of 4.7 (NUREG/CR–6260). By letter dated May 30, 1999, WOG also reported the result of the fatigue evaluation at the same location, but using the environmental factor approach (to the ASME Section III design fatigue curves) of Electric Power Research Institute (EPRI) Topical Report TR–105759. This evaluation showed a fatigue usage factor that was approximately 10% of the NUREG/CR–6260 fatigue usage factor. The purpose of this was to demonstrate that the extrapolated CUFs are very conservative.

The staff concurs that some of the procedures and assumptions on which the fatigue calculations are based may be excessively conservative. However, no quantitative assessment of this conservatism was provided. The staff therefore considers the CUFs provided in WCAP–14574 by Westinghouse as the projected CUFs of the subcomponents.

3.2.2 Evaluation of WOG's Aging Assessment for the Effects of Corrosion

In Section 3.2 of WCAP–14574, WOG defines corrosion to be degradation of a material as a result of chemical or electrochemical reaction with its environment. In this section, WOG identifies the following forms of corrosion that may be applicable to the pressurizer:

- General corrosion and boric acid corrosion of ferritic pressurizer components.
- Pitting and crevice corrosion.
- SCC, including intergranular stress corrosion cracking (IGSCC) and PWSCC.

3.2.2.1 General Corrosion, Pitting, Crevice Corrosion, and Boric Acid Corrosion of Ferritic Pressurizer Components

In Section 3.2 of the WCAP, WOG defines general corrosion as a uniform attack of a material of fabrication over its entire surface. WOG states general corrosion results from an electrochemical reaction on the surface of a metal. WOG describes general corrosion as a general thinning of the material, usually at a slow degradation rate. WOG states that general thinning can be managed by allowing sufficient excess material to be present in the design to accommodate the expected degree of material loss over the serviceable life of the component. WOG also states that more localized forms of corrosive attack, such as pitting, crevice corrosion, or SCC, may be more difficult to manage. In Section 3.2.2 of the report, WOG states that the Westinghouse pressurizers are designed with austenitic stainless steel claddings that provide considerable corrosion resistance to the ferritic regions of the pressurizer. In general, this is true; however, in the second sentence of the second paragraph of Section 3.2.2 of the report, WOG qualifies this assertion by stating that:

> "This resistance extends to crevice regions, where an aggressive environment has the potential to cause localized corrosion, even for film forming materials."

In Section 3.2.2 of the report, WOG proceeds to identify that the only creviced geometries that are present in Westinghouse-designed pressurizers are the tight-gapped regions between the heater sheath and the heater well, the surge nozzle and its thermal sleeve, and the spray

nozzle and its thermal sleeve. WOG states that hydrogen overpressure in the RCS minimizes the adverse effects of oxygen in the coolant and provides adequate protection against crevice corrosion in creviced geometries on the internal surfaces of the pressurizer. While the staff concurs that hydrogen overpressure can mitigate the aggressive corrosive effect of oxygen in creviced geometries on the internal pressurizer surfaces, applicants for license renewal will have to provide a basis (statement) in their plant-specific applications as to how their water chemistry control programs will provide for a sufficient level of hydrogen overpressure to manage crevice corrosion of the internal surfaces of their pressurizer. **(Renewal Applicant Action Item 3.2.2.1–1)**

In Section 3.2.2 of the report, WOG states that corrosive wastage of the external ferritic surfaces of the pressurizer or ferritic bolting materials may result if the primary coolant, which normally contains borated water, leaks out onto the external surfaces of the pressurizer. In this section, WOG identifies current activities to manage boric acid corrosion in Westinghouse-designed pressurizers. This include programs and other activities to monitor for boric acid corrosion consistent with the staff position in Generic Letter 88–05, *Boric Acid Corrosion of Carbon Steel Reactor Pressure Boundary Components*. WOG states that the boric acid monitoring and control programs have the following program attributes:

- Determination of principal locations where coolant leakage less than the allowable technical specification limits could result in degradation of the pressure boundary by boric acid corrosion.

- Visual examinations that are integrated into the VT–2 examinations conducted during system leakage tests.

- Corrective actions to prevent recurrences of this form of corrosion.

WOG then refers to the definition in ASME Code, Section XI, Paragraph IWA–2212 for VT–2 type visual examinations, and to the provisions in Paragraph IWB–3522.1 regarding primary coolant (borated water) leakage. The staff finds that the criteria in GL 88–05 and the Section XI requirements for conducting system leak tests and VT–2 type visual examinations of

the pressurizer pressure boundary are acceptable programs for managing boric acid corrosion of the external, ferritic surfaces and components of the pressurizer. However, the report fails to refer to the actual provisions in the ASME Code, Section XI, that require mandatory system leak tests of the pressurizer pressure boundary. These requirements are contained in Paragraph IWB–2500 and Category B–P of Table IWB–2500–1 of ASME Code, Section XI. The applicant must identify the appropriate ASME Code requirements. **(Renewal Applicant Action Item 3.2.2.1-2)**

3.2.2.2 Stress Corrosion Cracking

In Section 3.2.1 of the report, WOG identifies SCC as a form of localized corrosive attack that may occur when an applied stress, an environmentally aggressive environment, and a susceptible material are present in combination with one another. In this section WOG identifies three forms of SCC: (1) IGSCC, (2) PWSCC, and (3) transgranular stress corrosion cracking (TGSCC). WOG identified that TGSCC results from the presence of aggressive chemical species (e.g., caustics or chlorides) in the reactor coolant, especially if the species are coupled with a highly oxygenated coolant and applied stresses approaching yield strength levels.

In Section 3.2.2 of the report, WOG concluded that leaking primary coolant provides an aggressive environment that could affect the structural integrity of the pressurizer bolting materials made from quenched and tempered low-alloy steels (e.g., SA 193 Grade B7 Alloy 4140 Steels). However, WOG also concluded that, consistent with the analysis in EPRI Report NP–5769, SCC should not be a concern for the pressurizer closure bolting if the yield strength of the steels is held below 150 ksi. WOG stated that the material specification requires SA–193, Grade B7 bolting materials with a minimum yield strength of 105 ksi. The staff concurs that the potential to develop SCC in the bolting materials will be minimized if the yield strength of the material is held to less than 150 ksi, or the hardness is less than 32 on the Rockwell C hardness scale. However, the staff concludes that conformance with the minimum yield strength criteria in ASME Specification SA–193, Grade B7 does not in itself preclude a quenched and tempered low-alloy steel from developing SCC, especially if the acceptable yield strength is greater than 150 ksi. To take credit for the criteria in EPRI Report NP–5769, the

license renewal applicant needs to state that the yield strengths for the quenched and tempered low-alloy steel bolting materials (e.g., SA–193, Grade B7 materials) are within the range of 105–150 ksi **(Renewal Applicant Action Item 3.2.2.3.2–1)**.

In Section 3.2.2 of the report, WOG also discussed the potential for austenitic stainless steel pressurizer components to develop IGSCC in the extended operating periods. WOG concluded that three factors must be present for a material to have the potential to develop IGSCC: the material must be susceptible to IGSCC, the material must be subjected to a stress approaching or greater than the yield strength of the material, and the material must be subjected to an aggressively corrosive (oxidizing) environment. WOG identified that in the absence of any of these three conditions, IGSCC will not occur; however, WOG also noted that intergranular attack (IGA) is possible even with the absence of an applied stress. Both of these forms of attack induce cracking at the boundaries between the grains that comprise the material (grain boundaries). Since industry experience has shown that austenitic stainless steel materials have the potential to be susceptible to IGSCC, WOG concluded that those austenitic stainless steel components in the pressurizer in contact with the primary coolant have the potential to develop IGSCC. The staff concurs with this conclusion because the pressurizer is in contact with primary coolant and has the potential to develop IGSCC.

In its assessment in Section 3.2.2 of the report, WOG listed Westinghouse standard practices that are used to minimize the potential for austenitic stainless steel primary pressure boundary components to develop IGSCC and IGA. These practices include:

- Minimizing the time that austenitic stainless steel materials used in the components are subjected to temperatures in the sensitization range (900–1700°F).

- Controlling heat input during welding.

- Controlling the chemical environment of the primary coolant, particularly with regard to the levels of dissolved oxygen, chlorides, and other halides in the coolant.

- Ensuring that austenitic stainless steel materials for use in Westinghouse-designed nuclear plants will be procured to meet the IGA tests in ASTM Standard Practice A262.

In Section 3.2.2 of the report, WOG identified that the Westinghouse pressurizer subcomponents that are susceptible to SCC are the safe-end connections to the safety, relief, spray, and surge nozzles. WOG identified that these safe-ends in all Westinghouse pressurizers are fabricated from either Type 316 or 316L stainless steel, which provides better resistance to SCC than does Type 304 stainless steel. WOG identified that the concern for SCC in the safe-ends typically focuses on whether the safe-ends have been post-weld heat treated, which might promote sensitization of the safe-ends. WOG also evaluated the potential for Inconel pressurizer components to develop PWSCC during proposed extended operating terms. WOG has stated that with the exception of some of the components using Alloy 82/182 weld material for their pressure-retaining welds, no component in a Westinghouse-designed pressurizer is fabricated from Inconel 600-type materials (Alloy 600-type materials). The pressurizer heads and shells, surge nozzle, relief nozzle, and spray nozzle are fabricated from either carbon or magnesium-molybdenum steel materials; these pressurizer components are clad on their internal surfaces with either E309L or E308L stainless steel materials. However, WOG also identified that, for those safe-ends that were welded with Alloy 82/182 (Inconel 82/182) filler materials, the nozzles were first buttered with Inconel 182 filler metal and post-weld heat treated. The safe-ends were then welded to the buttered layers using Inconel 82 without subsequent post-weld heat treatments (PWHT). In Section 4.1 of the report, WOG proposed that aging programs are necessary to manage IGSCC of austenitic stainless steel pressurizer nozzles and PWSCC of Inconel 82/182 filler metals used in welding these nozzles to ferritic piping safe-ends. The staff concurs that aging management programs are necessary for these components. The staff's assessment of WOG's AMP for these components is contained in Section 3.3.2.2 of this SER.

In RAI Item No. 12, the staff informed WOG that age-related degradation has occurred in pressurized water reactor (PWR) designed thermal sleeves. In the RAI, the staff requested an evaluation of all relevant operating experience regarding age-related degradation of pressurizer thermal sleeves, and a discussion of whether the operating experience was germane to the evaluation of the pressurizer thermal sleeves as provided in the content of WCAP–14574. In its

response to the RAI, WOG indicated that no age-related degradation has occurred in the thermal sleeves for Westinghouse-designed surge-line nozzles and safety nozzles. The staff concurs with this assessment. The staff therefore considers the issue of thermal sleeve cracking in Westinghouse-designed pressurizer surge-line and safety nozzles to be closed.

3.2.3 Evaluation of WOG's Aging Assessment for the Effects of Irradiation Embrittlement

In Sections 3.3.1 and 3.3.2 of the report, WOG identified materials that have the potential to undergo changes in their microstructures and material properties when exposed to significant levels of neutron or gamma irradiation. Specifically, WOG identified that materials may undergo a significant loss in ductility or fracture toughness when exposed to neutron irradiation. However, WOG concluded that the pressurizer components in Westinghouse-designed pressurizers would not be subject to any loss of fracture toughness because the neutron fluences in the pressurizer are less than the neutron embrittlement thresholds of $1X10^{-20}$ n/cm^2 [sic] for neutrons with kinetic energies ≥ 0.1 MeV or $1X10^{-17}$ n/cm^2 [sic] for neutrons with kinetic energies ≥ 1.0 MeV.

The staff concurs with the argument that the neutron radiation and gamma radiation fields in the pressurizers are significantly lower than those in the reactor vessels. However, the threshold for irradiation embrittlement for neutrons with kinetic energies in excess of 1.0 MeV should be $1X10^{17}$ n/cm^2 (as opposed to $1X10^{-17}$ n/cm^2). This is the threshold neutron fluence for implementing surveillance programs that are designed to monitor for the effects of irradiation embrittlement.

3.2.4 Evaluation of WOG's Aging Assessment for the Effects of Thermal Aging

In Section 3.4.1 of the WCAP, WOG assessed the potential for the pressurizer components to become embrittled from thermal aging. WOG identified that thermal aging is a process in which the microstructures and properties of a material change as a result of being exposed to elevated temperatures for an extended period of time. WOG stated that while there are many forms of thermal aging, the only thermal aging mechanism that is applicable to the pressurizer components is thermal aging of two-phase, austenitic-ferritic cast stainless steel material. In

this section, WOG stated that exposure to the elevated temperatures for a prolonged period has the potential to induce complex phase changes in the ferritic phase of the steel that result in a reduced fracture toughness for the material. WOG identified that the spray head internal to the pressurizer is the only pressurizer component that is fabricated from two-phase, austenitic-ferritic cast stainless steel material, and that therefore the spray head is the only pressurizer component that has the potential of being susceptible to thermal aging embrittlement.

In RAI Item No. 5, the staff informed WOG that page 14 of WCAP–14574 states that the surge line nozzles are fabricated from carbon steel, but that page 4–12 of Nuclear Utility Management and Resources Council (NUMARC) Report 90–07 states that the nozzles are fabricated from cast stainless steel. In the RAI the staff requested that WOG clarify the basis for this discrepancy. In its reply to RAI Item No. 5, WOG stated that contrary to the statements in the NUMARC report, Westinghouse pressurizers do not have any pressure boundary nozzles, including surge line nozzles, fabricated from cast stainless steel. WOG stated that the surge nozzles for Westinghouse pressurizers are either integrally cast with the lower head, or a separate forged nozzle is welded to the head for those units where a fabricated head is used. Those units using integrally cast nozzles, the WOG noted that nozzles are fabricated from ASME SA–216, Grade WCC carbon steel. WOG indicated that for pressurizers designed with fabricated heads, the surge line nozzles were forged from SA–508, Class 2a steel, and welded to heads fabricated from SA 533, Grade A, Class 2 low-alloy carbon steel plate materials. WOG's response to RAI Item No. 5, when taken in context with the content of the report, indicates that the spray heads in the Westinghouse pressurizers are the only subcomponents that have the potential to degrade from thermal embrittlement. Since the pressurizer nozzles are not fabricated from two phase austenitic-ferritic cast stainless steels, Westinghouse applicants do not have to monitor and assess their pressurizer nozzles for evidence of thermal aging during a proposed extended operating term for their facility. Since the spray heads are not within the scope of license renewal (see discussion in SER Section 2.2), they are not subject to aging management review. This resolves the issue identified in RAI Item No. 5.

3.2.5 Evaluation of WOG's Aging Assessment for the Effects of Erosion and Flow-Assisted Corrosion (Erosion/Corrosion)

In Sections 3.5.1 and 3.5.2 of the WCAP, WOG assessed the potential for the pressurizer components to degrade by either erosion or flow-assisted corrosion (sometimes called erosion/corrosion). In these sections WOG identified erosion as a mechanical degradation process in which the material wears away as a result of mechanical action by a fluid or particulate matter on the surface of the metal, and flow-assisted corrosion (erosion/corrosion) as a process in which components wear away as the result of the combined effects of erosion and corrosion. WOG identified that carbon steel materials and low-alloy steel materials are the materials of fabrication that are most susceptible to flow-assisted corrosion, and that nickel-based steels, higher alloy steels, and austenitic stainless steels are considered resistant to the effects of erosion and flow-assisted corrosion in a PWR environment. In Sections 3.5.1 and 3.5.2, WOG identified that only the process of erosion is considered to be a potential aging mechanism for the pressurizer. WOG reached this conclusion because, of all the pressurizer subcomponents, the only components in contact with the reactor coolant are those fabricated from austenitic stainless steel. Since only austenitic stainless materials in the pressurizer are in contact with reactor coolant and austenitic materials are not subject to flow-assisted corrosion, the WOG discussion of flow-assisted corrosion is acceptable and the only remaining issue is erosion, which is discussed below.

In Section 3.5.2, WOG concluded that these subcomponents have a low probability of degrading by erosion because the components are subjected to relatively low fluid flow velocities, and because the coolant is filtered prior to being injected into the primary system, thus minimizing the potential for particulate materials to erode the metal surfaces of the components. WOG proceeds to state that the following pressurizer components are exposed to primary coolant fluid flows that have the potential to result in erosion of the components:

- Surge nozzle thermal sleeve.
- Spray nozzle thermal sleeve.
- Surge nozzle retaining basket.
- Spray head.

- Spray head coupling.
- Surge nozzle safe-end.
- Spray nozzle safe-end.

WOG then states that only one component, the spray head, has the potential to degrade from the process of erosion. The staff considers the discussion in Section 3.5.2 to be extremely confusing in that it appears WOG is making three different conclusions that conflict with one another:

(1) That fluid flow velocity and particulate conditions are not sufficient in the pressurizer to consider that erosion is a plausible degradation mechanism that could affect the integrity of the subcomponents in the pressurizer.

(2) That seven components in the pressurizer (refer to the list above) are exposed to fluid flows that have the potential to result in erosion of the components.

(3) That only one component in the pressurizer (the spray head) is exposed to a fluid flow that has the potential to result in erosion of the component.

The applicant should state why erosion is not plausible or does not require aging management for the surge nozzle thermal sleeve, spray nozzle thermal sleeve, surge nozzle safe-end, and spray nozzle safe-end. If erosion is plausible, then an AMP is required **(Renewal Applicant Action Item 3.2.5-1).**

3.2.6 Evaluation of WOG's Aging Assessment for the Effects of Degradation by Wear

In Sections 3.6.1 and 3.6.2 of the report, WOG defined wear as the removal or plastic displacement of material as the result of mechanical contact and motion of two surfaces against each other. WOG identified that, in general, the pressurizer components are not susceptible to wear; however, WOG did identify that the potential existed for some wear to occur at the heater well to support plate interface, resulting in the thinning of the sheath wall, and subsequently in electrical failure. However, WOG also stated that if such wearing did occur, the wear would not affect the ability of the pressurizer to maintain the structural integrity of the pressure boundary because the pressurizer is designed with a redundant boundary at the heater connection. The

staff concurs with this assessment because the pressurizer is designed with a redundant boundary at the heater connection and wear would not affect the ability of the pressurizer to meet its pressure boundary function.

3.2.7 Evaluation of WOG's Aging Assessment for the Effects of Creep and Stress Relaxation

3.2.7.1 Creep

In Sections 3.7.1 and 3.7.2 of the report, WOG defined creep as a plastic deformation process that occurs at elevated temperatures over time. WOG identified that the stress levels to initiate creep are typically below the stress associated with the material's elastic limit, and that the deformation occurs on constant strain. WOG has stated that creep is not a concern for austenitic alloys below 1000°F, nor for low-alloy steels below 800°F. WOG also stated that the maximum temperature experienced by the pressurizer component is 680°F. WOG, therefore, concluded that creep is not a significant aging mechanism for any pressurizer component. The staff concurs with this assessment.

3.2.7.2 Stress Relaxation

In Sections 3.7.1 and 3.7.2 of the report, WOG identified stress relaxation as a process in which a loaded (stressed) material may undergo a reduction in applied stress over time. WOG stated that stress relaxation is a process similar to creep, but which occurs under conditions where the elastic strain is replaced with plastic strain. WOG identified two contributors to stress relaxation: (1) elevated temperatures, and (2) neutron irradiation. WOG also identified the manway bolted connections as the only pressurizer components that could be impacted by the mechanism of stress relaxation. These bolts are preloaded when secured. WOG identified that the loss of preload could contribute to two age-related degradation methods in the manway's bolted connections:

- Excessive loss of preload or variability in preload could result in leakage through the bolted connection.

- If excessive loss of preload continues without correction, the potential exists for cyclic loads to be imposed on the bolts, which could increase the fatigue usage factor for the bolts.

WOG has stated that the neutron levels in the pressurizer are not high enough to be a potential contributor to any stress relaxation of the bolting materials. WOG identified that the loss of preload occurs at a decreasing rate over time, and that the majority of the loss of preload would occur within the first year of the time when the bolts are secured. WOG also stated that any cyclic loading amplitudes resulting from a loss of preload on the bolts would have to be large or of a long duration to result in detectable leakage from the manway mating surfaces. WOG therefore concluded that leakage through the bolted connections is the plausible aging effect for the bolting materials. The staff concurs with this assessment.

3.3 Assessment of Aging Management Activities and Program Attributes

In Chapter 4.0 of the report, WOG provided its options to manage aging effects during proposed extended operating periods for Westinghouse-designed nuclear power facilities. Table 4–1 of the report lists the six attributes that form the basis for the existing and additional AMPs. These attributes include the scope of the program, the surveillance techniques used to detect aging effects, the frequency of the surveillance, the acceptance criteria to determine when corrective actions are necessary, the corrective actions, and confirmation techniques. This report predates the "Draft Standard Review Plan for Review of License Renewal Applications for Nuclear Power Plants," which identified the 10 elements that are to be reviewed by the staff. WOG indicated, in Section 4.0 of the topical report, that the report only presents program attributes for the AMPs, and that the plant-specific details of the AMPs will be developed during the preparation of license renewal applications. Therefore, applicants for license renewal will be responsible for describing the plant-specific attributes of each AMP. **This is Renewal Applicant Action Item 3.3–1.**

3.3.1 Aging Management for Fatigue

3.3.1.1 Aging Management Programs

To manage the fatigue of the pressurizer subcomponents, WOG has proposed to implement two AMPs, or an industry-initiated program labeled "Proposed Industry Position on Fatigue Evaluation for License Renewal" (the Position). This initiative was under development in 1997. Attributes of these programs are described in Section 2.4.2 of this report.

The staff has evaluated the attributes of WOG's AMPs and finds them acceptable, on a generic basis, except for one. The acceptance attribute in AMPs 2.2 and 2.3 is an "acceptable cumulative usage factor (or equivalent)." Neither the CUF nor "equivalent" were defined. The staff, therefore, will require that applicants for license renewal provide a detailed description of the aging management programs for the pressurizer components and define the CUFs for these components in accordance with the ASME Section III Class 1 criterion (CUF≤1.0), consistent with the current licensing basis (CLB) or as revised in the license renewal application.

The ASME Section III Class 1 fatigue analyses are based on the assumption that the transients used in the design of Class 1 piping reflect actual plant operating conditions. The CLB fatigue design basis of WOG pressurizers typically does not include recently discovered additional insurge/outsurge transients and other operational transients discussed above. In addition, it also does not account for environmental effects on the ASME Section III design fatigue curves.

WOG has stated that plant-specific details will be developed during the preparation of the license renewal applications. The following information regarding the reevaluated TLAAs should be provided in plant-specific license renewal applications:

(1) The applicant should provided a detailed description and basis for the reduction of conservatism.

(2) The applicant should describe the thermal cyclic transients that form the basis of the reevaluated TLAAs. These should include the following, as applicable:

   a. Insurge/outsurge transients.
   b. Other transients.
   c. Surge line nozzle transient loads.

(3) The CUFs of all subcomponents should be shown to be ≤ 1.0 for the extended period of operation, accounting for environmental effects on the design fatigue curves and considering the reduction in conservatism.

In RAI Item No. 1.b, the staff requested that WOG provide a more detailed description of the program for addressing the effects of insurge-outsurge transients on CUFs, as provided in Report No. MUHP–5060/5061/5062 and described in Section 2.6.1 of WCAP–14574. In its response to the RAI, WOG stated that the proposed industry position, in part, addresses potential reconstitution of pressurizer lower head and surge nozzle thermal transients that may result from plant-specific application of the WOG program on insurge-outsurge transients mitigation. WOG also stated that this issue is not directly related to NRC Bulletin 88–11.

WOG stated that it anticipated that the insurge-outsurge report describing options for modified operations to mitigate insurge-outsurge transients, and associated design transients, would be finalized by the end of 1997. To date, WOG has not provided additional information regarding this program. WOG stated that WOG-member utilities could use the criteria in the report to determine the significance, if any, of the insurge-outsurge issue at their plants, and the opportunity to implement modified operating procedures to mitigate such transients, if deemed necessary. The issue of including the effects of insurge-outsurge transients in the TLAAs for fatigue has not been addressed.

In the resolution of Generic Safety Issue (GSI) 190, *Fatigue Evaluation of Metal Components for 60-Year Plant Life*, (NRC memorandum dated December 26, 1999, from A. C. Thadani, RES, to W. Travers, EDO), the staff concluded that during the license renewal period, the increase in risk from fatigue failure for metal components because of environmental effects on the ASME Class 1 fatigue curves, is negligible, and therefore no NRC generic regulatory action is required. The effects of the coolant environment on fatigue is discussed in more detail in Section 3.3.1.4 of this report. The non-design basis transients, including the insurge/outsurge transients, were outside the scope of GSI-190 and, therefore, not addressed.

License renewal applicants should, therefore, identify the TLAAs for the pressurizer components, define the associated CUF and, in accordance with 10 CFR 54.21(c)(1), demonstrate that the TLAAs meet the CLB fatigue design criterion, CUF ≤ 1.0, for the extended period of operation, including the insurge/outsurge and other transient loads not included in the CLB which are appropriate to such an extended TLAA, as described in the WOG report "Mitigation and Evaluation of Thermal Transients Caused by Insurges and Outsurges," MUHP–5060/5061/5062, and considering the effects of the coolant environment on critical fatigue locations. (**Renewal Applicant Action Item 3.3.1.1–1**).

3.3.1.2 Proposed Industry Position on Fatigue Evaluation for License Renewal

Step 1 of the proposed Industry Position, as specifically applied by WOG to WOG pressurizers, consists of determining if the current and projected transients for the license renewal term are encompassed within the CLB. The purpose of this step is to identify the actual or projected operational transients occurring during the license renewal period, and to verify that they fall within the CLB design-basis transients. WOG stated that the effects of fatigue will be considered to be adequately managed if an applicant can demonstrate that the CLB fatigue evaluations are valid for the license renewal period. If the existing design basis transients cannot be shown to account for the transients postulated to occur for the license renewal term, the position provides alternatives in the following three additional steps, depending on the results of the comparison made in this step.

Step 2 of the Industry Position consists of determining if the subcomponent is, or can be, included in the existing ISI program, and if these programs can manage the effects of fatigue for the license renewal term. For the pressurizer, the applicable plant-specific ASME Section XI ISI program would be used and would be applicable only to those pressurizer subcomponents accessible for ISI. The various examination categories are listed in Section XI, Table IWB–2500–1. Examination Category B–F requires volumetric and surface examinations for welds of nozzles with connected piping greater than four inches in diameter, and surface examination only for welds of nozzles with connected piping less than four inches in diameter. Since evidence of excessive fatigue damage will manifest itself by fatigue crack initiation and/or growth, the position expects that the volumetric and/or surface examinations at the frequencies specified in ASME Section XI IWB–2400 will be sufficient to manage the effects of significant fatigue damage for the license renewal period.

This step of the Position refers to the ISI of ASME Section III Class 1 piping that is four inches in diameter or less. In contacts with ASME and industry representatives, the staff has expressed a concern about the effectiveness of the ASME Section XI required inspections in identifying cracks caused by fatigue or other degradation mechanisms, if present, in piping less than four inches in diameter. It is obvious that cracks in the inner weld surface cannot be detected by surface examination of the outer surface exclusively. The staff is currently interacting with ASME and industry to develop an appropriate approach to resolve this concern. No consensus has been reached on such an approach. The staff has not endorsed the

position that uses volumetric examination to permit continuing operation of piping and components where the CUF has been determined to exceed the ASME Section III CUF criterion.

Step 3 of the Industry Position is provided if the subcomponent is not, or cannot, be included in an adequate ISI program. It consists of evaluating the subcomponent for the license renewal term based on an augmented ISI program, considering the flaw tolerance approach of the ASME Section XI non–mandatory Appendix for evaluation of fatigue in operating plants. As stated in the report, implementation of this option is subject to staff approval of this non–mandatory Appendix. As an alternative, this step offers the option of recalculating the cummulative fatigue usage for the license renewal term, based on refining the fatigue calculations by eliminating perceived conservatisms from the fatigue analysis. The Industry Position also recommends that both flaw tolerance and fatigue usage calculations should consider appropriate environmental factors on fatigue crack initiation or growth. As stated in the report, this should be done consistent with a generic NRC position on fatigue for license renewal. The Industry Position does not address the environmental effects on fatigue crack initiation and growth.

Step 3 also states that the existing ISI program to manage the fatigue effects for the license renewal term will include future risk-based considerations. In RAI Item No. 2, the staff requested that the ISI program be based on the 1989 Edition of ASME Section XI, and that any deviation from this standard be reviewed and endorsed by the staff. In the response to RAI Item No. 2, WOG agreed to include risk-based considerations as endorsed by the staff, and that reference in the position will be made to the 1989 Edition of ASME Section XI. This resolves the issue identified in RAI Item No. 2.

Step 3 also states that, based on published results of the status of PVRC activities regarding environmental effects on fatigue, and the expected PWR water chemistry, it does not appear that environmental effects will be a significant issue for WOG pressurizers. In RAI Item No. 4, the staff indicated that the published results of the PVRC had not been endorsed by the staff, and requested elimination of reference to these results (Reference 17 of the WOG report). In a letter dated May 30, 1997, WOG responded that, to provide WOG utilities with a complete status of activities related to environmental effects on fatigue, it would not delete the reference to the report. However, it would add the following sentence: "It is noted that, at the time of this writing, the NRC staff has not endorsed the results in Reference 17. Any plant-specific

evaluations of environmental effects on fatigue should be performed in accordance with a methodology endorsed by the NRC staff at the time of the evaluation." The staff finds this acceptable because WOG has indicated that any plant-specific evaluation of fatigue environmental effects should be performed using a methodology endorsed by the staff. This resolves RAI Item No. 4.

WOG stated that plant-specific details on the WOG position on environmental effects on fatigue related to the Industry Position will be provided during the preparation of the license renewal applications. The staff has reviewed the steps in the WOG position, under development at the time of the submittal of the WOG report, and has determined that there is insufficient information to assess the quality and scope of the WOG position in actual application. The staff, therefore, cannot endorse the generic application of the proposed Industry Position to WOG pressurizers. The staff will, however, consider approval of the WOG position on a case-by-case basis only as part of a plant-specific license renewal application.

Step 4 of the Industry Position consists of repairing or replacing the subcomponents, per ASME Section XI, Subsections IWA–4000 and IWA–7000. The staff finds this an acceptable option.

3.3.1.3 Aging Management for Pressurizer Thermal Sleeves

The staff requested information regarding age-related degradation of the thermal sleeves in the surge and spray nozzles. In response, WOG stated in a letter dated May 30, 1997, that thermal sleeve degradation has usually occurred in sleeves exposed to a cross-flow environment, causing flow-induced vibration of the sleeves. The sleeves in the surge and spray nozzles do not experience cross-flow velocities, so they are not subjected to flow-induced vibration. The staff concurs with this assessment and finds it reasonable and acceptable. This resolves RAI Item No. 12.

3.3.1.4 Environmental Effects on ASME Section III Fatigue Design Curves

In 1993, the NRC staff expressed concerns regarding adverse environmental effects on the ASME Section III fatigue design curves and the fatigue qualification of ASME Section III Class 1 piping and reactor coolant pressure boundary components. These concerns were based on test data that had recently become available (NUREG/CR–5999) which indicates there could be a significant reduction in the fatigue life of metal components in a reactor primary system

environment. To resolve these concerns, the staff established a fatigue action plan (FAP) under which the Idaho National Environmental Engineering Laboratory performed evaluations of selected components at seven operating plants (NUREG/CR–6260), using interim fatigue curves proposed by the Argonne National Laboratory (ANL) (NUREG/CR–5999) to account for environmental effects. The closure of the FAP was documented in NRC Policy Issue SECY–95–245, *Completion of the Fatigue Action Plan.*

The staff also evaluated these concerns under GSI–166, *Adequacy of Fatigue Life of Metal Components.* This GSI was intended to resolve this issue for plants with a design life of 40 years and plants considering a license renewal extension to 60 years. Based on the results of the FAP, the staff concluded that the environmental effects on plants within the first forty years of life were not significant and no immediate staff or licensee action was required. The staff based its conclusions on available transient monitoring records, certain conservatism identified in the existing fatigue analyses methodologies, and an RES risk assessment based on a 40-year plant life. However, the issue of environmental effects on the design fatigue curves for plants seeking to extend their operating licenses to 60 years was not resolved. The staff therefore established GSI–190, *Fatigue Evaluation of Metal Components for 60-Year Plant Life,* to address this issue separately.

In SECY–95–245, the staff proposed that license renewal applicants evaluate a sample of components with high-fatigue usage factors, using the latest available environmental fatigue data developed by ANL. This would provide an acceptable technical basis for addressing this issue (60 FR 22484, May 8, 1995) for the extended period of operation, or until a resolution of GSI–190 became available. In a memorandum dated December 26, 1999, regarding the closure of GSI–190, the staff recommended that, as AMPs are formulated in support of license renewal, licensees address the effects of the coolant environment on component fatigue. The evaluation of a sample of components with high-fatigue usage factors using the latest available environmental fatigue data is an acceptable method to address the effects of coolant environment on component fatigue life.

WOG has adopted in this topical report the industry position on environmental effects on fatigue. Environmental effects on the ASME Section III fatigue curves in this proposed industry position are considered based on recommendations by the PVRC. In this industry position, operational screening criteria have been specified that serve to indicate that the environmental effects issue will not be significant. Otherwise, factors have been developed to modify the

existing ASME Section III design fatigue curves, and thus account for environmental effects on these curves. Subsequent evaluation of environmental fatigue data by ANL has resulted in the development of revised environmental fatigue curves (SECY 95–245), and the identification by the staff of open issues regarding this industry proposal by letter dated August 6, 1999. Further issues were also raised at a meeting between the staff and the industry (letter dated May 17, 1999). The staff has not endorsed the PVRC approach to account for environmental effects on fatigue, and has therefore not endorsed the industry position as a resolution to GSI–190. In accordance with the closure of GSI–190, the staff will require that license renewal applicants address management of the environmental effects on the fatigue damage to the pressurizer subcomponents (see Renewal Applicant Action Item 3.3.1.1–1 in Section 3.3.1.1 of this report).

3.3.2 Aging Management for Forms of Corrosion

3.3.2.1 General Corrosion and Boric Acid Corrosion of Ferritic Pressurizer Components

In Section 3.2.3 of the WCAP, WOG concluded that no AMP is necessary to manage general forms of corrosion on the pressurizer materials. WOG's basis for the claim provided in Section 3.2.2 of the report. WOG's basis for this is that the cladding to the pressurizer naturally forms a passive protective oxide layer, which protects the internal surfaces of the pressurizer against effects of general corrosion. WOG also stated that hydrogen overpressure in the RCS typically mitigates the effects of oxygen in creviced geometries on the internal surfaces of the pressurizer. WOG therefore concluded that general corrosion is not significant for the internal surfaces of Westinghouse-designed pressurizers and that no further evaluations of general corrosion are necessary. While the staff concurs that hydrogen overpressure can mitigate the aggressive corrosive effect of oxygen in creviced geometries on the internal pressurizer surfaces, applicants for license renewal will have to provide a basis (statement) in their plant-specific applications about how their water chemistry control programs will provide for a sufficient level of hydrogen overpressure to manage general corrosion of the internal surfaces of their pressurizer.

In Section 3.2.3 of the WCAP, WOG also concluded that an AMP is not necessary to manage boric acid corrosion of the external surfaces of ferritic and low-alloy steel pressurizer components. WOG's basis for this conclusion is that any primary water leakage (borated water

leakage) would be detected well before the time when leaking borated water or boric acid residues could effectively waste (corrode) away the ferritic or low-alloy pressurizer materials.

On January 14, 1997, the staff issued a series of RAIs to WOG for resolution. In RAI Item No. 8, the staff disagreed with WOG's conclusions that (1) boric acid corrosion would not affect any components in the pressurizer, and (2) no AMP is necessary to control boric acid leakage. The staff stated that WOG appears to be relying on a program to mitigate the effects of boric acid corrosion so as to conclude that boric acid corrosion is not an aging effect. In the RAI, the staff requested that WOG revise the report to include an AMP for boric acid corrosion, or provide a justification for why a boric acid management program is not needed. On May 30, 1997, WOG replied and stated that the "staff has misinterpreted WOG's position on boric acid corrosion," and that "WOG's position is that external pressurizer components may be affected by boric acid leakage." However, in the reply to the RAI, WOG stated that "effects resulting from boric acid leakage, an event that causes degradation, are managed by [the] current activities described in Paragraph 3 of Section 3.2.2," of the report. WOG also stated its position that "an event management program limits degradation and precludes aging from occurring." WOG stated that it would amend the report to provide further descriptions of the programs described in Section 3.2.2 of the WOG report.

The staff concludes that the reply to RAI Item No. 8 does not resolve the issue of whether an AMP is necessary to control boric acid leakage and corrosion of pressurizer components. The staff's position is that WOG should credit the programs listed in Paragraph 3 of Section 3.2.2 of the WCAP as being sufficient to manage the effects of boric acid corrosion. Therefore, applicants for license renewal must provide sufficient details in their LRAs about how their GL 88–05 programs and inservice inspection programs will be sufficient to manage the corrosive effects of boric acid leakage on their pressurizer components during the proposed extended operating terms for their facilities **(Renewal Applicant Action Item 3.3.2.1–1).**

In RAI Item No. 9, the staff, in part, inquired whether an AMP was necessary to manage leakage out of the pressurizer manway gaskets. In its response to RAI Item No. 9, WOG indicated that postulated leakage from the manway gaskets is considered to be an event-driven mechanism, not an aging degradation mechanism. In making this statement, WOG identified that the boric acid leakage program and ISI programs described in Section 3.2.2 of the WCAP can be used to manage the effects of any postulated leakage from the gaskets. Manway gaskets are not considered by the ASME Code to be primary pressure boundary components.

The manway gaskets, therefore, are not considered to fall under the scope of license renewal because they do not serve the function of maintaining the primary pressure boundary during extended operating terms. However, any leakage from the manway gaskets can be appropriately controlled by the applicant's boric acid monitoring and control programs. The staff considers this to be a reasonable approach to controlling leakage from the gaskets, which may occur between maintenance periods for the pressurizer. This resolves RAI Item No. 9.

In RAI Item No. 10, the staff requested a description of (1) the potential for corrosion of the bolt holes in the carbon steel manway cover, and (2) the potential for corrosion of the manway cover at the interface between the cover and the manway gasket. The staff informed WOG that an AMP for the bolted manway connections was necessary to ensure against cracking and loss of preload, and then requested that WOG either revise the report to include an AMP for the bolted connections in the pressurizer or provide a justification for not including it. In its response to RAI Item No. 10, WOG indicated that it did not consider boric acid corrosion of the bolt holes and manway covers to be an age related degradation mechanism that needed an AMP, and that instead, it was an event-driven effect. In making this conclusion, WOG stated that this event can be managed by the event management program in Section 3.2.2. of the report. Again, the staff's position is that the report should credit the programs listed in Paragraph 3 of Section 3.2.2 to the WOG report as being sufficient to manage the effects of boric acid corrosion. The issues identified in RAI Item No. 10 are similar to the issue for RAI Item No. 8. Therefore, the applicant's response to Renewal Applicant Action Item 3.3.2.1–1 must be sufficient to resolve how the plant-specific GL 88–05 programs and inservice inspection programs will be sufficient to manage boric acid leakage through bolted manway connections and to preclude boric acid corrosion of the manway bolts and covers.

3.3.2.2 Aging Management Programs for Stress Corrosion Cracking, Including Programs for IGSCC of Austenitic Stainless Steel Pressurizer Components, PWSCC of Inconel Pressurizer Components, and Manway Covers

In Section 3.2.2 of the report, WOG concluded that the safe-ends of the surge, instrument, and relief nozzles are the only pressurizer components that are fabricated from austenitic stainless steel, subject to high stresses, and in contact with the primary coolant. In this section WOG also stated that, to date, there has not been any operating experience that indicated the presence of IGSCC or IGA in austenitic stainless steel pressure boundary components in the pressurizer. In spite of the lack of IGSCC industry experience for these components, WOG

recommended that AMPs be proposed for controlling IGSCC of the austenitic stainless steel pressurizer nozzles and PWSCC of dissimilar metal nozzle-to-safe-end weld filler metals. In this section, WOG identified that the programs may include the following optional attributes:

- Review of industry experience, developments from ongoing laboratory studies of PWSCC of Inconel 82/182 filler metals, and developments from ongoing research activities on alternative weld consumables (e.g., on Inconel 52/152 filler materials).

- Crediting plant-specific ISI programs for examinations of dissimilar nozzle-to-safe-end welds and adjacent HAZ/base metal in accordance with inspection and frequency criteria in Category B–F of Table IWB–2500–1 to Section XI of the ASME Code, and crediting the evaluation criteria of Paragraph IWB–3514 for assessing flaws in these components if flaw indications are detected during the examinations of the nozzle-to-safe-end welds.

WOG program attributes for controlling IGSCC/PWSCC in the pressurizer nozzles and safe-ends, and for verifying that the pressurizer can perform its intended safety function during the license renewal period, are incomplete. In RAI Item No. 6, the staff took issue with the omission by WOG to identify IGSCC as an age-related degradation mechanism for the shell/heads, spray line nozzle, valve nozzle, manway, instrumentation nozzle, surge line nozzle, and support skirt of the pressurizer. The staff stated that it considered AMPs for these components to be necessary because: (1) high levels of oxygen could be introduced into the primary coolant during cooldown conditions as a result of efforts to control crud bursts; (2) high levels of oxygen may be introduced into the primary coolant during shutdown operations as a result of exposing the reactor coolant system to the outside air; (3) the pressurizer cladding may have regions of low delta ferrite that have been sensitized during PWHT, and thus be susceptible to IGSCC; and (4) ASME Section XI requires inspections of the pressurizer welds and weld regions.

In its response to the RAI, WOG replied that, to date, neither PWSCC nor IGSCC has been a problem in these pressurizer components, and that currently there is no need for an AMP for these components. The WOG position is based on the following:

(1) Implementation of industry practices during the fabrication of Westinghouse-designed pressurizers to limit the degree of sensitization of the austenitic stainless steel portions of these components, including the practice of limiting the heat input during welding;

(2) The industry practice of controlling the dissolved oxygen content of the reactor coolant to less than 0.10 ppm during power operations or times when the reactor coolant temperature is greater than 200°F; and

(3) The practice of limiting the amount of Inconel or Alloy 600 materials used in Westinghouse-designed pressurizers and using Inconel 82/182 filler metals only.

The staff considers that the lack of industry experience is not an acceptable basis for concluding that IGSCC/PWSCC will not occur in the pressurizer nozzle components during a proposed extended operating period for a WOG member facility, especially when there have been cases of pressurizer instrumentation nozzle cracking in the industry (e.g., cracking in two of the Type 316 stainless steel instrumentation nozzles at Surry Unit 1). With the exception of those nozzles that are integrally cast with the pressurizer shell or heads, the staff considers the surge, spray, relief, and instrumentation nozzles to be penetrations that are welded to pressurizer shells or heads using partial- or full- penetration welds. The welding of these components may create highly stressed regions in the weld and adjacent base metal areas; the staff considers these areas to be potentially susceptible to SCC.

As invoked by the requirements of 10 CFR 50.55a, PWR licensees are required by Table IWB–2500–1 to Section XI of the ASME Code to perform the following inspections of pressurizer nozzle components:

- Items B3.30 and B3.40 of Examination Category B–D, volumetric examinations of full-penetration nozzle-to-vessel welds and nozzle inside radii.

- Item B5.40 of Examination Category B–F, volumetric and surface examinations of nozzle-to-safe-end butt welds greater than 4 inches in nominal pipe size.

- Items B5.50 of Examination Category B–F, surface examinations of nozzle-to-safe-end butt welds less than 4 inches in nominal pipe size, and B5.60 of Examination Category B–F, surface examinations of nozzle-to-safe-end socket welds.

- Item B15.20 of Examination Category B–P, system leak tests and VT–2 type visual examinations of the pressurizer pressure boundary.

- Item B15.30 of Examination Category B–P, system hydrostatic tests and VT–2 type visual examinations of the pressurizer pressure boundary.

The manway covers are pressure boundary components that are secured in place with 1.875 inch-diameter, quenched, and tempered low-alloy steel bolts (such as Alloy 4140 steels, SA–193 Grade B7 materials). The staff considers that these bolting materials may be susceptible to SCC if the yield strength for the materials is greater than 150 ksi or if the Rockwell C hardness is greater than 32 (**Renewal Applicant Action Item 3.2.2.3.2–1**). Table IWB–2500–1 to Section XI of the ASME Code requires the following inspections of the manway bolting materials:

- Item B7.20 of Examination Category B–G–2, visual VT–1 surface examinations of the bolts, studs, and nuts in the pressurizer primary pressure boundary.

In 1995/1996, IGSCC- and TGSCC- type cracking were reported in two of the instrumentation nozzles welded to the pressurizer of the Surry Unit 1 nuclear plant (letters dated October 9, 1995, and February 23, 1996). This event provides definite evidence that the potential exists for SCC-type cracking to initiate in the penetration nozzles of Westinghouse-designed pressurizer vessels. The staff concludes that WOG should have determined that AMPs are necessary to control and manage the potential for SCC to occur in welded pressurizer penetration nozzles and manway bolting materials, and that WOG should have recommended that applicants for license renewal could credit their administrative primary coolant chemistry control programs, ASME Code ISI programs for the pressurizers, and plant-specific 10 CFR Part 50, Appendix B, quality assurance programs as the bases for managing the phenomena of PWSCC/IGSCC of these pressurizer components. These programs are already implemented by licensees at their facilities. The staff concludes that applicants need to extend AMP–2–1 to the pressurizer penetration nozzles, to the nozzle-to-vessel welds, and to the manway bolting materials, and to include the appropriate Code requirements among the program attributes listed in Table 4–1 and summarized in the text in Section 4.1 of the report. Applicants for license renewal must provide sufficient details in their license renewal applications (LRAs) about how their primary coolant chemistry control programs, ISI programs, and 10 CFR Part 50, Appendix B, quality assurance programs will be sufficient to manage the potential for SCC to occur in the pressurizer nozzle components and bolted manway covers

during the proposed extended operating terms for their facilities **(Renewal Applicant Action Item 3.3.2.2–1).**

In RAI Item No. 7, the staff disagreed with WOG's conclusion that an AMP for the cladding of the pressurizer is not needed. In the RAI, the staff informed WOG that it believed that cracks in the clad could propagate into the base metal, and that the cladding should be included among the components to be addressed by an AMP for stress corrosion cracking. In this RAI, the staff stated that an acceptable program to demonstrate the integrity of the cladding could be a one-time license renewal inspection of the cladding and any attachment welds to the cladding.

In its response to RAI Item No. 7, WOG stated that an AMP is not necessary because the circumferential cracking discovered in the Haddam Neck pressurizer cladding was the result of an isolated, plant-specific event, and not caused by an age-related degradation mechanism. In its response, WOG stated that the following paragraph would be added to the report to clarify this position:

> "In 1990, the Connecticut Yankee Atomic Power Company (CYAPCO) discovered and reported a 10- to 20-inch-wide band of crack-like indications in the Haddam Neck pressurizer cladding. The cracking extended 360° around the circumference of the pressurizer and was located about 1 to 2 feet below the normal water level [letter dated May 30, 1997, and SECY 95–245]. Nondestructive examination investigations established that at least some of the indications penetrated the cladding to the cladding-ferritic base metal interface. Review of plant operating records revealed that the same band of indications had been reported as early as 1970. The indications may have been caused by a spray of cold water from the spray nozzle onto the cladding during a low water-level transient, which the plant operating records show occurred prior to the 1970 inspection that first discovered the indications. Alternatively, the indications may have been present during initial start-up. Whatever the cause of the indications, they have been dormant since at least 1970. This has been confirmed by inspections subsequent to the 1990 inspections using a more accurate inspection technique. Therefore, the crack-like indications were not caused by an aging-related degradation process such as fatigue or stress corrosion cracking. This condition has recently been reviewed to the satisfaction of the USNRC. On the basis that this condition is unique to the Haddam

Neck pressurizer, and that it is not an aging-related form of degradation, it is not considered further in this generic evaluation."

The staff has noted that WOG's proposed wording is simply a restatement of the information provided in Section 2.6.3 of the WCAP. In the evaluation of the cracks in the cladding of the Haddam Neck pressurizer, the staff concurred with the conclusions in the Northeast Utilities safety evaluations that the flaw indications in the cladding were acceptable under ASME Section XI, and that the Haddam Neck Unit would be acceptable for continued operation. However, in its SERs of the event, the staff did not come to a definitive conclusion as to what was the source of the cracking. The staff therefore concludes that the paragraph on page 2.6.3 of the report does not provide a sufficient basis for concluding that the cracking in the Haddam Neck pressurizer cladding was solely the result of a one-time operational pressurizer level transient, in that the paragraph does not:

(1) Provide sufficient details about where and when the cracking in the cladding occurred.

(2) Provide sufficient details about the operational event that is presumed to have initiated the cracking in the cladding.

(3) Provide sufficient details about the inspections performed in 1970 that would support WOG's conclusions that the cracks in the pressurizer cladding have been dormant.

(4) Provide a reference or summary of any NRC inspection report or safety evaluation report that supported and concurred with the conclusion that the cracking in the cladding was not the result of thermal fatigue or SCC.

The staff therefore concludes that WCAP–14574 does not contain enough information to conclude that the cracking in the Haddam Neck pressurizer cladding was not the result of thermal fatigue or SCC. SCC is not a concern for crack propagation into the ferritic base metal or weld metal beneath the cladding due to the water chemistry controls used in PWRs. The staff therefore concludes that applicants must propose an AMP to verify whether or not thermal fatigue-induced cracking has propagated through the clad into the ferritic base metal or weld metal beneath the clad **(Renewal Applicant Action Item 3.3.2.2–2).**

In RAI Item No. 11, the staff requested identification of those components that are welded to the inside cladding of the pressurizer vessel, and a discussion of whether aging management programs are necessary to monitor for cracking in these welds. In its reply to the RAI, WOG identified that the following internal Type 304 stainless steel supports are welded to the pressurizer cladding using E308 or E308L filler material: spray head coupling, upper heater support plate bracket, lower heater support plate bracket, surge nozzle retaining basket, and heater welds. WOG identified that of these components, the spray head coupling is welded using a full penetration weld, the upper and lower heat support brackets are welded using 0.5-inch fillet welds, and the surge nozzle retaining basket is welded to the cladding using a 0.25-inch fillet weld. WOG also stated that procedural control of weld-process heat input, and fit-up thicknesses, as well as testing of the welds following the methods of ASTM A262 Practice E, have prevented the sensitization that could render the weld materials and heat-affected zones susceptible to IGSCC. WOG therefore maintained that an AMP for these components was not necessary because there have been no generic cracking incidents of the component welds to date. In addition, in Section 3.1 of this SER, the staff concluded that these components are not within the scope of license renewal as defined in 10 CFR 54.4. However, the staff is concerned that IGSCC in the heat-affected zones of these welds could grow as a result of thermal fatigue into the adjacent pressure boundary during the license renewal term. The staff considers that these welds will not require aging management in the extended operating periods if applicants can provide a reasonable justification that sensitization has not occurred in these welds during the fabrication of these components. Therefore, applicants for license renewal must provide a discussion of how the implementation of their plant-specific procedures and quality assurance requirements, if any, for the welding and testing of these austenitic stainless steel components provides reasonable assurance that sensitization has not occurred in these welds and their associated heat-affected zones. In addition, the staff requests that applicants for license renewal identify whether these welds fall into Item B8.20 of Section XI Examination Category B–H, Integral Attachments for Vessels, and if applicable, whether the applicants have performed the mandatory volumetric or surface examinations of these welds during the ISI inspection intervals referenced in the examination category (**Renewal Applicant Action Item 3.3.2.2–3**). The information provided by WOG and the Renewal Applicant Action Item resolve the issue identified in RAI Item No. 11.

3.3.3 Aging Management for the Effects of Irradiation Embrittlement

In Section 3.3.3, WOG concluded that no surveillance programs would be needed to monitor for radiation-induced embrittlement of the pressurizer components, because the neutron and irradiation fields within the pressurizer are not high enough to induce radiation embrittlement of the pressurizer components. Pending the corrections to Section 3.3.2 of the report (refer to Open Item No. 3.2.3–1), the staff concurs with this conclusion. The staff therefore concludes that no AMP or TLAA surveillance program is necessary to monitor for radiation embrittlement of the pressurizer components.

3.3.4 Aging Management for the Effects of Thermal Embrittlement

In Section 2.3.2, WOG indicated that the spray heads in Westinghouse-designed pressurizers were fabricated from ASTM A296 Grade CF8M duplex stainless steels and that the spray heads are secured in place with a locking bar welded to the upper head cladding and the spray head. In Section 3.4.2 of the report, WOG identified that the spray head is the only pressurizer component that could be susceptible to thermal aging embrittlement. However, WOG concluded that any postulated thermal aging of the spray head would not have any significant effect on the safety function of the pressurizer because it is a low-stressed component and is located internally to the pressurizer shell and heads. WOG therefore concluded that no further thermal aging assessment of the spray head need be performed, and that no AMP was needed for the spray heads in Westinghouse-designed plants.

In Section 3.1 of this SER, the staff concurred with WOG's determination that the spray heads in Westinghouse-designed pressurizers are not within the scope of license renewal. The staff therefore concludes that an AMP is not necessary to control thermal aging in Westinghouse pressurizer spray heads.

3.3.5 Aging Management for the Effects of Erosion and Erosion/Corrosion

The staff cannot determine whether an aging management program is necessary for managing erosion in the pressurizer until WOG provides a clearer assessment of erosion (Refer to Open Item No. 3.2.5–1). The WOG response to Open Item No. 3.2.5–1 will be used to determine whether an such AMP is necessary.

3.3.6 Aging Management for the Effects of Wear

In the report, WOG did not identify any pressurizer pressure boundary components that have the potential to be affected by wear. The staff concurs with WOG's assessment, and concludes that no aging management programs are necessary to manage wear in the pressurizer components.

3.3.7 Aging Management for the Effects of Creep and Stress Relaxation

3.3.7.1 Aging Management for Creep

In Section 3.7.2 of the report, WOG concluded that creep is not a significant aging mechanism for any pressurizer component, because the operating temperatures for the pressurizer were not significantly high to be a factor that could induce creep. WOG therefore concluded that aging management programs were not necessary to monitor for and control the effects of creep in the pressurizer components. The staff concurs with this assessment.

3.3.7.2 Aging Management for Stress Relaxation

In Section 3.7.2 of the report, WOG concluded that leakage from the bolted connections of the pressurizer manways is the only aging effect that could result from stress relaxation of the bolted connections. In the report, however, WOG stated, that the magnitude of the bolt preloads is intended to compensate for some loss of preload. WOG also stated that operating history supports the premise that stress relaxation is not an aging effect that needs to be addressed by pressurizer AMPs. WOG has concluded that stress relaxation of the bolted manway connections is plausible, yet WOG is relying on a lack of industry experience as the basis for claiming that management of this aging effect is not necessary. The staff concludes that a lack of operating experience is not a sufficient basis for concluding that aging management is not necessary for aging effects considered to be plausible by the industry.

In Section 3.3.2.1 of this report, the staff concluded that applicants crediting the programs listed in Paragraph 3 of Section 3.2.2 to the WCAP as being sufficient to manage the effects of boric acid corrosion. In addition, the staff concluded that applicants for license renewal must provide sufficient details in their LRAs as to how their GL 88–05 programs and inservice inspection

programs will be sufficient to manage the corrosive effects of boric acid leakage on their pressurizer components during the proposed extended operating terms for their facilities. Applicant responses in Renewal Applicant Action Item 3.3.2.1-1 should be comprehensive enough to show how the boric acid control programs (e.g., GL 88–05 Programs) and ISI programs will be sufficient to address the issue of stress relaxation in the bolted connections for the pressurizer manway.

4.0 CONCLUSIONS

4.1 Conclusion for Aging Management Programs for Fatigue

(1) Extrapolation of the current design fatigue usage factors from 40 to 60 years indicates that the pressurizer's intended function cannot be assured for the license renewal period, even for those subcomponents determined in the report to have a CUF less than 1.0, for the following reasons:

- The CLB design-basis fatigue analyses of WOG pressurizer subcomponents do not include transient loading conditions such as additional insurge/outsurge and other transients not included in the CLB.

- The design-basis fatigue analyses do not account for environmental effects on the ASME Section III design fatigue curves.

(2) Except for concerns expressed in the staff's evaluation in Section 3.3.1.1 of this SER, the topical report forms an acceptable generic framework for WOG pressurizer fatigue management programs for the extended period of operation. However, applicants for license renewal will be required to provide plant-specific details of these programs. These should therefore be provided in plant-specific applications. These items are identified in the Renewal Applicant Action Items listed for the management of fatigue (refer to Section 5.1 of this SER).

4.2 Conclusion for Aging Management for Other Forms of Age-related Degradation

1. In general, the report forms an acceptable framework for managing the effects of thermal embrittlement, wear, and creep in Westinghouse-designed pressurizer components.

2. The report does not form an acceptable framework for managing the effects of erosion and erosion/corrosion in Westinghouse-designed pressurizer components. Renewal Applicants need to state why erosion is not plausible or does not require aging management for the pressurizer components that are listed in Section 3.5.2 of the report (Refer to Renewal Applicant Action Item 3.2.5–1 that is listed in Section 5.2 of this SER).

3. WOG concludes that stress relaxation is a plausible aging effect that can occur in bolted pressurizer manway closures; however, due to a lack of detrimental operating experience, it does not consider this effect to be one that requires aging management during extended operating terms. Lack of detrimental experience is not a sufficient basis for concluding that aging management is not necessary for aging effects considered plausible by the industry. The staff therefore concludes that the report, in its current form, does not form an acceptable framework for managing the effects of stress relaxation and corrosion. WOG concludes that boric-acid corrosion is not an aging effect that needs to be managed for Westinghouse plants. The staff does not agree. Stress relaxation of bolting could lead to loosening of the bolted connections and leakage, and result in boric-acid induced corrosion of the bolting. Pressurizer manway gaskets have historically experienced such leakage. On this basis, the staff concludes that boric-acid induced corrosion is an applicable aging effect for bolted connections in the pressurizer, and needs to be managed during proposed extended operating terms for Westinghouse PWRs. (Refer to Renewal Applicant Action Item 3.3.2.1-1 that is listed in Section 5.2 of this SER).

4. The report, in its current form, also does not form an acceptable framework for managing the effects of stress corrosion cracking in Westinghouse-designed pressurizer components. WOG has proposed that aging management is necessary to control the effects of IGSCC of austenitic stainless steel safe-ends to penetration nozzles in the pressurizer designs and the effects of PWSCC of Alloy 82/182 filler metals used in the safe-end-to-nozzle welds for these components, yet WOG does not consider that aging management is necessary to control IGSCC/PWSCC in the portions of the nozzles penetrating the pressurizer vessels. The IGSCC and TGSCC that have been reported in the penetration portions of the instrumentation nozzles at the Surry Nuclear Plant are indications that SCC-type cracking

can occur in the nozzle-to-shell welds of welded pressurizer penetration nozzles. The staff concludes that applicants revise the scope of AMP-2.1 to include the penetration nozzles that are welded to the pressurizer shells or heads and to the bolting materials in the pressurizer manways (Refer to Renewal Applicant Action Item 3.3.2.2-1 that is listed in Section 5.2 of this SER).

5.0 RENEWAL APPLICANT ACTION ITEMS

5.1 Renewal Applicant Action Items for the Management of Fatigue

The following items should be included in plant-specific license renewal applications:

Renewal Applicant Action Item 3.3.1.1–1. License renewal applicants should identify the TLAAs for the pressurizer components, define the associated CUF and, in accordance with 10 CFR 54.21(c)(1), demonstrate that the TLAAs meet the CLB fatigue design criterion, CUF ≤ 1.0, for the extended period of operation, including the insurge/outsurge and other transient loads not included in the CLB which are appropriate to such an extended TLAA, as described in the WOG report "Mitigation and Evaluation of Thermal Transients Caused by Insurges and Outsurges," MUHP–5060/5061/5062, and considering the effects of the coolant environment on critical fatigue location. The applicant must describe the methodology used for evaluating insurge/outsurge and other off-normal and additional transients in the fatigue TLAAs.

5.2 Renewal Applicant Action Items for Aging Management Programs of Other Aging Effects

1. **Renewal Applicant Action Item 3.2.2.1–1.** In the report, WOG concluded that general corrosion is nonsignificant for the internal surfaces of Westinghouse-designed pressurizers and that no further evaluations of general corrosion are necessary. While the staff concurs that hydrogen overpressure can mitigate the aggressive corrosive effect of oxygen in creviced geometries on the internal pressurizer surfaces, applicants for license renewal will have to provide a basis (statement) in their plant-specific applications about how their water chemistry control programs will provide for a sufficient level of hydrogen overpressure to manage crevice corrosion of the internal surfaces of their pressurizer.

2. **Renewal Applicant Action Item 3.2.2.1-2.** The staff finds that the criteria in GL 88–05 and the Section XI requirements for conducting system leak tests and VT–2 type visual examinations of the pressurizer pressure boundary are acceptable programs for managing boric acid corrosion of the external, ferritic surfaces and components of the pressurizer. However, the report fails to refer to the actual provisions in the ASME Code, Section XI that require mandatory system leak tests of the pressurizer boundary. The applicants must identify the appropriate Code inspection requirements from ASME Code Table IWB-2500-1.
3. **Renewal Applicant Action Item 3.2.2.3.2–1.** The staff concurs that the potential to develop SCC in the bolting materials will be minimized if the yield strength of the material is held to less than 150 ksi, or the hardness is less than 32 on the Rockwell C hardness scale; however, the staff concludes that conformance with the minimum yield strength criteria in ASME Specification SA–193 Grade B7 does not in itself preclude a quenched and tempered low-alloy steel from developing SCC, especially if the acceptable yield strength is greater than 150 ksi. To take credit for the criteria in EPRI Report NP–5769, the applicant needs to state that the acceptable yield strengths for the quenched and tempered low-alloy steel bolting materials (e.g., SA–193, Grade B7 materials) are in the range of 105–150 ksi.

4. **Renewal Applicant Action Item 3.2.5-1.** The staff considers the discussion in Section 3.5.2 to be extremely confusing in that it appears WOG is making three different conclusions that conflict with one another:

   a. That fluid flow velocity and particulate conditions are not sufficient in the pressurizer to consider that erosion is a plausible degradation mechanism that could affect the integrity of the subcomponents in the pressurizer.

   b. That seven components in the pressurizer (refer to the list above) are exposed to fluid flows that have the potential to result in erosion of the components.

   c. That only one component in the pressurizer (the spray head) is exposed to a fluid flow that has the potential to result in erosion of the component.

   The applicant should state why erosion is not plausible for the surge nozzle thermal sleeve, spray nozzle thermal sleeve, surge nozzle safe-end, and spray nozzle safe-end. If erosion is plausible, then an AMP is required.

5. **Renewal Applicant Action Item 3.3–1.** Applicants for license renewal must describe how each plant-specific AMP addresses the following 10 elements: (1) scope of the program, (2) preventive action, (3) parameters monitored or inspected, (4) detection of aging effects, (5) monitoring and trending, (6) acceptance criteria, (7) corrective actions, (8) confirmation process, (9) administrative controls, and (10) operating experience.

6. **Renewal Applicant Action Item 3.3.2.1–1.** Applicants for license renewal must provide sufficient details in their LRAs about how their GL 88–05 programs and ISI programs will be sufficient to manage the corrosive effects of boric acid leakage on their pressurizer components during the proposed extended operating terms for their facilities, including postulated leakage from the pressurizer nozzles, pressurizer nozzle-to-vessel welds, pressurizer nozzle-to-safe end welds, and pressurizer manway bolting materials.

7. **Renewal Applicant Action Item 3.3.2.2–1.** The staff concludes that an AMP is necessary to control and manage the potential for SCC to occur in welded pressurizer penetration nozzles and manway bolting materials, and recommends that a licensee could credit the following programs as the basis for managing the phenomena of PWSCC/IGSCC of the pressurizer components: (1) the primary coolant chemistry control program; (2) the ISI program for the pressurizers; and (3) the plant-specific quality assurance program as it pertains to assuring that previous welding activities on welds in the pressurizer have been controlled in accordance with the pertinent requirements of 10 CFR Part 50, Appendix B, and with the pertinent welding requirements of the ASME Code for Class 1 systems. The staff concludes that applicants need to extend AMP–2–1 to the pressurizer penetration nozzles, to the nozzle-to-vessel welds, and to the manway bolting materials, and to include the appropriate Code requirements among the program attributes listed in Table 4–1 and summarized in the text in Section 4.1 of the report. Applicants for license renewal must provide sufficient details in their LRAs as to how their primary coolant chemistry control programs, ISI programs, and 10 CFR Part 50, Appendix B, quality assurance programs will be sufficient to manage the potential for SCC to occur in the pressurizer nozzle components and bolted manway covers during the proposed extended operating terms for their facilities.

8. **Renewal Applicant Action Item 3.3.2.2–2.** Applicants must propose an AMP to verify whether or not thermal fatigue-induced cracking has propagated through the clad into the ferritic base metal or weld metal beneath the clad.

9. **Renewal Applicant Action Item 3.3.2.2–3.** The staff is concerned that IGSCC in the heat-affected zones of 304 stainless steel supports that are welded to the pressurizer cladding could grow as a result of thermal fatigue into the adjacent pressure boundary during the license renewal term. The staff considers that these welds will not require aging management in the extended operating periods if applicants can provide a reasonable justification that sensitization has not occurred in these welds during the fabrication of these components. Therefore, applicants for license renewal must provide a discussion of how the implementation of their plant-specific procedures and quality assurance requirements, if any, for the welding and testing of these austenitic stainless steel components provides reasonable assurance that sensitization has not occurred in these welds and their associated heat-affected zones. In addition, the staff requests that applicants for license renewal identify whether these welds fall into Item B8.20 of Section XI Examination Category B–H, Integral Attachments for Vessels, and if applicable, whether the applicants have performed the mandatory volumetric or surface examinations of these welds during the ISI intervals referenced in the examination category.

6.0 REFERENCES

1. Part 54 to Title 10, *Code of Federal Regulations*, "Requirements for Renewal of Operating Licenses for Nuclear Power Plants."

2. Letter dated July 3, 1996, from Westinghouse Owners Group to the U.S. Nuclear Regulatory Commission Document Control Desk, submittal of Westinghouse Energy Systems Topical Report WCAP–14574, "License Renewal Evaluation: Aging Management Evaluation for Pressurizers."

3. WCAP–14574, "License Renewal Evaluation: Aging Management Evaluation for Pressurizers," July 1996.

4. Letter dated January 14, 1997, from S.C. Flanders, U.S. Nuclear Regulatory Commission, to R.A. Newton, Chairman, LCM/LR Working Group, Westinghouse Owners Group, "Request for Additional Information Regarding the Westinghouse Owners Group Topical Report WCAP–14574 (TAC No. M96110)."

5. Letter dated May 6, 1997, from R.J. Prato, U.S. NRC, to the Westinghouse Owners Group, with enclosed Request for Additional Information on WOG Generic Technical Report WCAP–14574.

6. Letter dated May 30, 1997, from R.A. Newton, Chairman, LCM/LR Working Group, Westinghouse Owners Group, to the U.S. Nuclear Regulatory Commission Document Control Desk, "Westinghouse Owners Group Response to NRC Request for Additional Information on WOG Generic Technical Report WCAP–14574," License Renewal Evaluation: Aging Management for Pressurizers".

7. SECY 95–245 *Completion of the Fatigue Action Plan*, September 25, 1997.

8. NUREG/CR–6260, *Application of NUREG/CR–5999 Interim Fatigue Curves to Selected Nuclear Power Plant Components*, 1995.

9. NUREG/CR–5999, *Interim Fatigue Design Curves for Carbon, Low Alloy and Austenitic Stainless Steels in LWR Environments*, 1993.

10. EPRI TR–105759, *An Environmental Factor Approach to Account for Reactor Water Effects in Light Water Reactor Pressure Vessel and Piping Fatigue Evaluations*, December 1995.

11. Letter dated August 6, 1999, from C.I. Grimes, Director, License Renewal and Environmental Branch, Division of Reactor Program Management, U.S. Nuclear Regulatory Commission, to D.J. Walters, Nuclear Energy Institute (NEI), with enclosed Assessment of NEI Letters.

12. Meeting between the U.S. NRC staff and the Nuclear Energy Institute held on May 17, 1999, in Rockville, Maryland.

13. Letter dated October 9, 1995, from D.A. Christian, Station Manager, Surry Power Station, to the U.S. Nuclear Regulatory Commission Document Control Desk, submittal of Virginia Electric Power Company Licensee Event Report No. 50–280/95–007–00

14. Letter dated February 23, 1996, from D.A. Christian, Station Manager, Surry Power Station, to the U.S. Nuclear Regulatory Commission Document Control Desk, submittal of Virginia Electric Power Company Licensee Event Report 50–280/95–007–01.

15. Letter dated June 29, 1990, from E.J. Mroczka, Senior Vice President, Northeast Utilities, to the U.S. Nuclear Regulatory Commission Document Control Desk, "Haddam Neck Plant, Structural Evaluation of Pressurizer Indications."

16. Letter dated March 24, 1992, from J.F. Opeka – Executive Vice President, Northeast Utilities, to the U.S. Nuclear Regulatory Commission Document Control Desk, "Haddam Neck Plant, Pressurizer Examination Results."

17. Letter dated February 12, 1993, from J.F. Opeka – Executive Vice President, Northeast Utilities, to the U.S. Nuclear Regulatory Commission Document Control Desk, "Haddam Neck Plant, Pressurizer Examination Results."

18. Letter dated August 3, 1990, from Alan Wang, Project Manager, Project Directorate I–4, Division of Reactor Projects I/II, Office of Nuclear Reactor Regulation, U.S. Nuclear Regulatory Commission, to E.J. Mroczka, Senior Vice President, Northeast Utilities, "Haddam Neck Plant - Evaluation of Cracks and Flaw Indications in the Haddam Neck Pressurizer . . ."

19. Letter dated July 12, 1994, from J.F. Stolz, Director, Project Directorate I–4, Division of Reactor Projects I/II, Office of Nuclear Reactor Regulation, U.S. Nuclear Regulatory Commission, to J.F. Opeka, Executive Vice President, Northeast Utilities, "Haddam Neck Plant - Pressurizer Examination Results. . ."

20. Memorandum dated December 26, 1999, from Ashok C. Thadani to William D. Travers, Closure of Generic Safety Issue 190, *Fatigue Evaluation of Metal Components for 60-Year Plant life.*

ACKNOWLEDGEMENTS

The authors would like to acknowledge the efforts and support of the Westinghouse Owners Group (WOG) Ad Hoc Technical Group Chairman for this report, Mr. John Giddens of Southern Nuclear Operating Company.

The authors would also like to thank the other members of the WOG Life Cycle Management/License Renewal (LCM/LR) Program Core Group and Expert Review Panel, and especially the Group Chairman, Mr. Roger Newton of Wisconsin Electric, for their direction and support during the preparation of this report. Finally, the authors would like to thank those individuals from the WOG utilities who performed the technical reviews of this report throughout its development.

The special technical contributions of Don Harrod, Ben Hood, and J. K. Visaria of Westinghouse Electric Company, Pensacola Division, Gutti Rao of Westinghouse Electric Company, ESBU, and Robert Nickell of Applied Science and Technology are also gratefully acknowledged. Thanks are also due to Gordon Vytlacil and Charlie Meyer of Westinghouse Electric Company, Energy Systems Business Unit, as well as Leslie McSwain and Robin Clark for their coordination and for providing background material.

DISCLAIMER OF RESPONSIBILITY

This report was prepared by the WOG LCM/LR Working Group as an account of work sponsored by the WOG. Neither members of the WOG, Westinghouse Electric Company, nor any person acting on their behalf:

- Makes any warranty, express or implied, with respect to the use of any information, apparatus, method, or process disclosed in this report or use thereof may not infringe privately owned rights, or

- Assumes any liabilities with respect to the use of, or for damages resulting from the use of, any information, apparatus, method, or process disclosed in this report

EXECUTIVE SUMMARY

This report evaluates aging of the pressurizer to ensure that the intended function will be maintained during an extended period of operation. The pressurizer performs the intended function of ensuring the integrity of the reactor coolant pressure boundary for the pressurizer.

The pressurizer is subject to an aging management review because it performs an intended function, is passive, and is long-lived. This aging management review has identified aging effects and provides options that manage these effects. When implemented, these options will ensure that the intended function will be maintained during an extended period of operation.

The scope of this report includes domestic commercial nuclear power plants with Westinghouse nuclear steam supply systems (NSSS). Specifically for the pressurizer, the scope is limited to the pressurizer pressure boundary up to and including the nozzles.

This evaluation was performed in support of the Westinghouse Owners Group (WOG) Life Cycle Management/License Renewal (LCM/LR) program.

Guided by general experience and industry issues, various aging degradation effects were reviewed to assess potential impact on the function of the pressurizer. The effects considered include:

- Fatigue
- Corrosion/SCC/PWSCC
- Irradiation embrittlement
- Thermal aging
- Erosion and erosion/corrosion
- Wear
- Creep and stress relaxation

None of these effects have posed a problem to date for Westinghouse pressurizers. For the extended period of operation, the effects requiring management are due to potential PWSCC of nozzle safe ends and fatigue. Potential PWSCC effects are managed by current industry practices. Evaluation of fatigue as a TLAA and options to manage fatigue are provided, and the effectiveness of these programs during an extended period of operation is justified.

In conclusion, this evaluation has shown that the pressurizer intended function will be maintained by these options (when implemented) during an extended period of operation. In addition, the RCS intended functions, supported by the pressurizer intended function, will also be maintained.

This approved version (WCAP-14574-A) incorporates the NRC Final Safety Evaluation as well as WOG response to NRC Requests for Additional Information.

This page intentionally left blank

TABLE OF CONTENTS

EXECUTIVE SUMMARY iii
1.0 INTRODUCTION 1
1.1 APPLICABILITY 2
1.2 AGING MANAGEMENT EVALUATION SCOPE 2

2.0 IDENTIFICATION OF TIME-LIMITED AGING ANALYSES AND AGING EFFECTS 9
2.1 GENERAL DESCRIPTION AND BOUNDARY DEFINITION 9
2.2 SUBCOMPONENTS SUBJECT TO AN AGING MANAGEMENT REVIEW 10
2.3 DESCRIPTIONS 10
2.3.1 Pressurizer Sizes 10
2.3.2 Detailed Description of Pressurizer 12
2.3.3 Weld Materials and Weld Processes 18
2.4 ENGINEERING AND DESIGN DATA 20
2.4.1 Design Basis 20
2.4.2 Design Temperature and Pressure 21
2.4.3 Design Radiation Levels 21
2.4.4 Codes, Standards, and Regulations 21
2.4.5 Pressurizer Stress/Fatigue/Fracture Mechanics Analysis 24
2.5 TIME-LIMITED AGING ANALYSES 29
2.6 INDUSTRY ISSUES AND MAINTENANCE HISTORY 32
2.6.1 Pressurizer Insurge and Outsurge Transients 33
2.6.2 Primary Water Stress Corrosion Cracking of Alloy 600 33
2.6.3 Haddam Neck Pressurizer Clad Cracking 34
2.6.4 Environmental Effects in Fatigue and Related Industry Activities 35
2.6.5 Leaking of Manway Gasket Seals 42
2.6.6 Immersion Heater Damage 42
2.6.7 Instrument Nozzle Cracking 42
2.7 AGING EFFECTS 43

3.0 AGING MANAGEMENT REVIEW 45
3.1 FATIGUE 45
3.1.1 Mechanism Description 45
3.1.2 Aging Effect Evaluation 45
3.1.3 Aging Effect Management 46
3.2 CORROSION/STRESS CORROSION CRACKING/PWSCC 47
3.2.1 Mechanism Description 47
3.2.2 Aging Effect Evaluation 47
3.2.3 Aging Effect Management 53
3.3 IRRADIATION EMBRITTLEMENT 53
3.3.1 Mechanism Description 53
3.3.2 Aging Effect Evaluation 53
3.3.3 Aging Effect Management 54

TABLE OF CONTENTS (Continued)

3.4 THERMAL AGING 54
3.4.1 Mechanism Description 54
3.4.2 Aging Effect Evaluation 54
3.4.3 Aging Effect Management 54
3.5 EROSION AND EROSION/CORROSION 54
3.5.1 Mechanism Description 54
3.5.2 Aging Effect Evaluation 55
3.5.3 Aging Effect Management 55
3.6 WEAR 56
3.6.1 Mechanism Description 56
3.6.2 Aging Effect Evaluation 56
3.6.3 Aging Effect Management 56
3.7 CREEP AND STRESS RELAXATION 56
3.7.1 Mechanism Description 56
3.7.2 Aging Effect Evaluation 57
3.7.3 Aging Effect Management 57
3.8 TIME-LIMITED AGING ANALYSES EVALUATION 57
3.8.1 Conservatisms in the Design Transients 58
3.8.2 Conservatisms in the Analysis 59
3.8.3 Design Calculation Updates 59
3.8.4 Insurge and Outsurge Transients 60
3.9 AGING EFFECT EVALUATION SUMMARY 61
3.9.1 Fatigue 64
3.9.2 SCC and PWSCC 64

4.0 AGING MANAGEMENT ACTIVITIES AND PROGRAM ATTRIBUTES 65
4.1 CURRENT ACTIVITIES AND PROGRAM ATTRIBUTES 66
4.2 ADDITIONAL ACTIVITIES AND PROGRAM ATTRIBUTES 67

5.0 SUMMARY AND CONCLUSIONS 81
5.1 SUMMARY 81
5.2 CONCLUSIONS 81

6.0 REFERENCES 83

WOG RAI RESPONSES

LIST OF TABLES

Table 1-1 Commercial Westinghouse Nuclear Power Plants in the United States 3
Table 1-2 Scope of Pressurizer Subcomponents Addressed in Report 5

Table 2-1 Summary of Subcomponents Requiring Aging Management Review 11
Table 2-2 Pressurizer Types 12
Table 2-3 Containment Environment Conditions (External to Pressurizer) Design Values 22
Table 2-4 Radiation Environment Internal to the Pressurizer 22
Table 2-5 Representative Level A and B (Normal and Upset) Conditions 26
Table 2-6 Representative Level C (Emergency) Conditions 27
Table 2-7 Representative Level D (Faulted) Conditions 27
Table 2-8 Representative Test Conditions 28
Table 2-9 Representative External Load Combinations 30
Table 2-10 Summary of Representative Calculated Design Fatigue Usage 31
Table 2-11 Pressurizer Welds, Welding Processes, and Consumables 36
Table 2-12 Presence or Absence of Alloy 600 Base Metal and Inconel 82/182 Weld Metal in Westinghouse Domestic Pressurizers 37

Table 3-1 Pressurizer Safe End Materials and PWHT 51
Table 3-2 Aging Effect Evaluation Summary 62

Table 4-1 Aging Management Program Attributes 65
Table 4-2 Aging Management Activities and Program Attributes for Pressurizer SCC/PWSCC (AMP-2.1) 67
Table 4-3 Aging Management Activities and Program Attributes for Pressurizer Fatigue: Analysis (AMP-2.2) 69
Table 4-4 Aging Management Activities and Program Attributes for Pressurizer Fatigue (AMP-2.3) 69
Table 4-5 Aging Management Activities and Program Attributes for Pressurizer ISE Option for Fatigue Management (AMP-2.4) 73
Table 4-6 PVRC Values of Independent Parameters for Acceptable or Moderate Environmental Effects on the S-N Fatigue Life of Carbon and Low Alloy Steels [Ref. 17] 76

LIST OF FIGURES

Figure 1-1 Pressurizer and Subcomponents 6
Figure 1-2 Pressurized Water Reactor Coolant System 7

Figure 2-1 Pressurizer Size Differences 13
Figure 2-2 Pressurizer Welding Processes and Weld Materials 19
Figure 2-3 Schematic of Pressurizer Nozzles Identifying Inconel 82/182 Locations 39

Figure 4-1 Flowchart Describing Proposed Industry Position on Fatigue Evaluation for License Renewal of Passive Class 1 Component Locations with Explicit Fatigue Design Basis 75

ACRONYMS AND DEFINITIONS

AMAPA	Aging Management Activities and Program Attributes
AMP	Aging Management Program
ANL	Argonne National Labs
ANSI	American National Standards Institute
ASME	American Society of Mechanical Engineers
BNCS	Board on Nuclear Codes and Standards
BWR	Boiling water reactor
BTP	Branch Technical Position
CLB	Current licensing basis
CLEE	Cyclic life and environmental effects
CVCS	Chemical and volume control system
FEM	Finite element modeling
GTAW	Gas tungsten arc welding
IGSCC	Intergranular stress corrosion cracking
ISE	In-service examination
ISI	In-service inspection
LCM	Life cycle management
LER	Licensee Event Report
LR	License Renewal
NEI	Nuclear Energy Institute
NNS	Non-nuclear safety
NRC	Nuclear Regulatory Commission
NSSS	Nuclear steam supply system
PORV	Power-operated relief valve
PVRC	Pressure Vessel Research Council
PWHT	Post-weld heat treated or treatment
PWR	Pressurized water reactor
PWSCC	Primary water stress corrosion cracking
RCP	Reactor coolant pump
RCS	Reactor coolant system
RG	Regulatory Guide
SAW	Submerged arc welding
SCC	Stress corrosion cracking
SMAW	Shielded metal arc welding
TGSCC	Transgranular stress corrosion cracking
TLAA	Time-limited aging analysis
WOG	Westinghouse Owners Group

This page intentionally left blank

1.0 INTRODUCTION

The objectives of this evaluation are to:

- Identify and evaluate aging effects that degrade component functions that support system intended functions
- Identify and evaluate time-limited aging analyses (TLAAs)
- Provide options, in terms of activities and program attributes, to manage these effects

System-level intended functions will be ensured by maintaining structure or component (SC) functions that support system intended functions. Hereafter, those SC functions that support system intended functions will be referred to as SC intended functions.

Aging management options identified in this report, when implemented, will ensure that the pressurizer intended function is maintained during an extended period of operation.

This evaluation starts by identifying why the system, structure, or component (SSC) is within the scope of the license renewal rule. An SSC is within the scope of the rule if it performs or supports an intended function. An intended function of an SSC is a function it performs or supports, as specified in 10 CFR 54.4(a):

1. The safety-related systems, structures, and components which are relied upon to remain functional during and following design-basis events (10 CFR 50.49 (b)(1)) to ensure the following functions:

    a. The integrity of the reactor coolant pressure boundary,

    b. The capability to shutdown the reactor and maintain it in a safe shutdown condition, or

    c. The capability to prevent or mitigate the consequences of accidents that could result in potential offsite exposure comparable to the 10 CFR Part 100 guidelines.

2. All non-safety-related systems, structures, and components whose failure could prevent any of the functions identified in paragraphs 1 a, b, or c above.

3. All systems, structures, and components relied on in safety analyses or plant evaluations to perform a function that demonstrates compliance with the Commission's regulations for fire protection (10 CFR 50.48), environmental qualification (10 CFR 50.49), pressurized thermal shock (10 CFR 50.61), anticipated transients without scram (10 CFR 50.62), and station blackout (10 CFR 50.63). [Ref. 1]

The evaluation continues by determining if the SC is subject to an aging management review. An SC is subject to an aging management review if the SC:

- Performs an intended function
- Performs an intended function in a passive manner
- Is long-lived

The pressurizer subcomponents within the scope of the rule and subject to an aging management review are identified in Section 2.0. Section 2.0 also identifies TLAAs and mechanisms that cause aging effects. The aging management review (Section 3.0) describes age-related degradation mechanisms to identify effects. Effects are then evaluated to determine degradation of intended functions. Management options for TLAAs and effects that degrade intended functions are provided in Section 4.0.

The aging management options provided in this evaluation must be developed into programs by utilities applying for a renewed license. Implementation of these programs during an extended period of operation demonstrates that aging effects are managed and the intended functions will be maintained.

1.1 APPLICABILITY

This evaluation is generically applicable to domestic commercial nuclear power plants with a Westinghouse nuclear steam supply system (NSSS). Preparation of the report included establishment of boundaries by Westinghouse Electric Company as well as utility reviewer confirmation of these boundaries to a practical extent. Use of this report, as referenced by a license renewal application, should include verification of all the bounding information against plant-specific data. This verification will identify that the report is applicable to the plant or what plant-specific data are not covered by this report and will be evaluated as part of the license renewal application. Table 1-1 lists the plants included in this evaluation. As noted in this table, initial commercial operation dates for these plants range from 1968 to 1996.

1.2 AGING MANAGEMENT EVALUATION SCOPE

The evaluation of the pressurizer includes the pressurizer vessel and its subcomponents that form part of the reactor coolant system (RCS). The pressurizer subcomponents addressed in the scope of this evaluation are listed in Table 1-2 and shown in Figure 1-1. The piping lines connected to the pressurizer are addressed in the Class 1 piping GTR [Ref. 15]. The basic configuration of the Westinghouse RCS for a four-loop pressurized water reactor (PWR) is shown in Figure 1-2.

TABLE 1-1
COMMERCIAL WESTINGHOUSE NUCLEAR POWER PLANTS
IN THE UNITED STATES

Alpha	Plant Name	Commercial Operation Date
CYW	Haddam Neck	1/68
RGE	Ginna	7/70
WEP	Point Beach 1	12/70
CPL	Robinson 2	3/71
WIS	Point Beach 2	10/72
FPL	Turkey Point 3	12/72
VPA	Surry 1	12/72
VIR	Surry 2	5/73
FLA	Turkey Point 4	9/73
NSP	Prairie Island 1	12/73
CWE	Zion 1	12/73
WPS	Kewaunee	6/74
IPP	Indian Point 2	8/74
COM	Zion 2	9/74
NRP	Prairie Island 2	12/74
AEP	D C Cook 1	8/75
INT	Indian Point 3	8/76
DLW	Beaver Valley 1	10/76
PSE	Salem 1	6/77
ALA	Farley 1	12/77
VRA	North Anna 1	6/78
AMP	D C Cook 2	7/78
VGB	North Anna 2	12/80
TVA	Sequoyah 1	7/81
APR	Farley 2	7/81
PNJ	Salem 2	6/82
DAP	McGuire 1	12/81
TEN	Sequoyah 2	6/82

TABLE 1-1 (Continued)
COMMERCIAL WESTINGHOUSE NUCLEAR POWER PLANTS
IN THE UNITED STATES

Alpha	Plant Name	Commercial Operation Date
CGE	V C Summer	1/84
DBP	McGuire 2	3/84
SCP	Callaway 1	12/84
PGE	Diablo Canyon 1	5/85
DCP	Catawba 1	6/86
SAP	Wolf Creek	9/85
CAE	Byron 1	9/85
PEG	Diablo Canyon 2	3/86
NEU	Millstone 3	4/86
DDP	Catawba 2	8/86
CQL	Shearon Harris 1	5/87
GAE	Vogtle 1	6/87
CBE	Byron 2	8/87
DMW	Beaver Valley 2	11/87
CCE	Braidwood 1	7/88
TGX	South Texas 1	8/88
CDE	Braidwood 2	10/88
GBE	Vogtle 2	5/89
THX	South Texas	6/89
TBX	Comanche Peak 1	8/90
NAH	Seabrook	8/90
TCX	Comanche Peak 2	7/93
WAT	Watts Bar 1	1996
WBT	Watts Bar 2	Indef.

TABLE 1-2
SCOPE OF PRESSURIZER SUBCOMPONENTS ADDRESSED IN REPORT

Lower Head
Surge Nozzle
Surge Nozzle Safe End
Surge Nozzle Thermal Sleeve
Heater Well Nozzle
Immersion Heaters
Support Skirt and Flange
Surge Nozzle Retaining Basket
Shell
Seismic Lugs
Valve Support Bracket Lugs
Instrument Nozzles
Heater Support Plates
Heater Support Plate Brackets
Heater Support Plate Bracket Bolts
Upper Head
Spray Nozzle
Spray Nozzle Safe End
Spray Nozzle Thermal Sleeve
Spray Head
Spray Head Coupling
Safety Nozzle
Safety Nozzle Safe End
Relief Nozzle
Relief Nozzle Safe End
Manway
Manway Cover
Manway Cover Bolts/Studs
Manway Pad Gasket Seating Surface
Spray Head Locking Bar

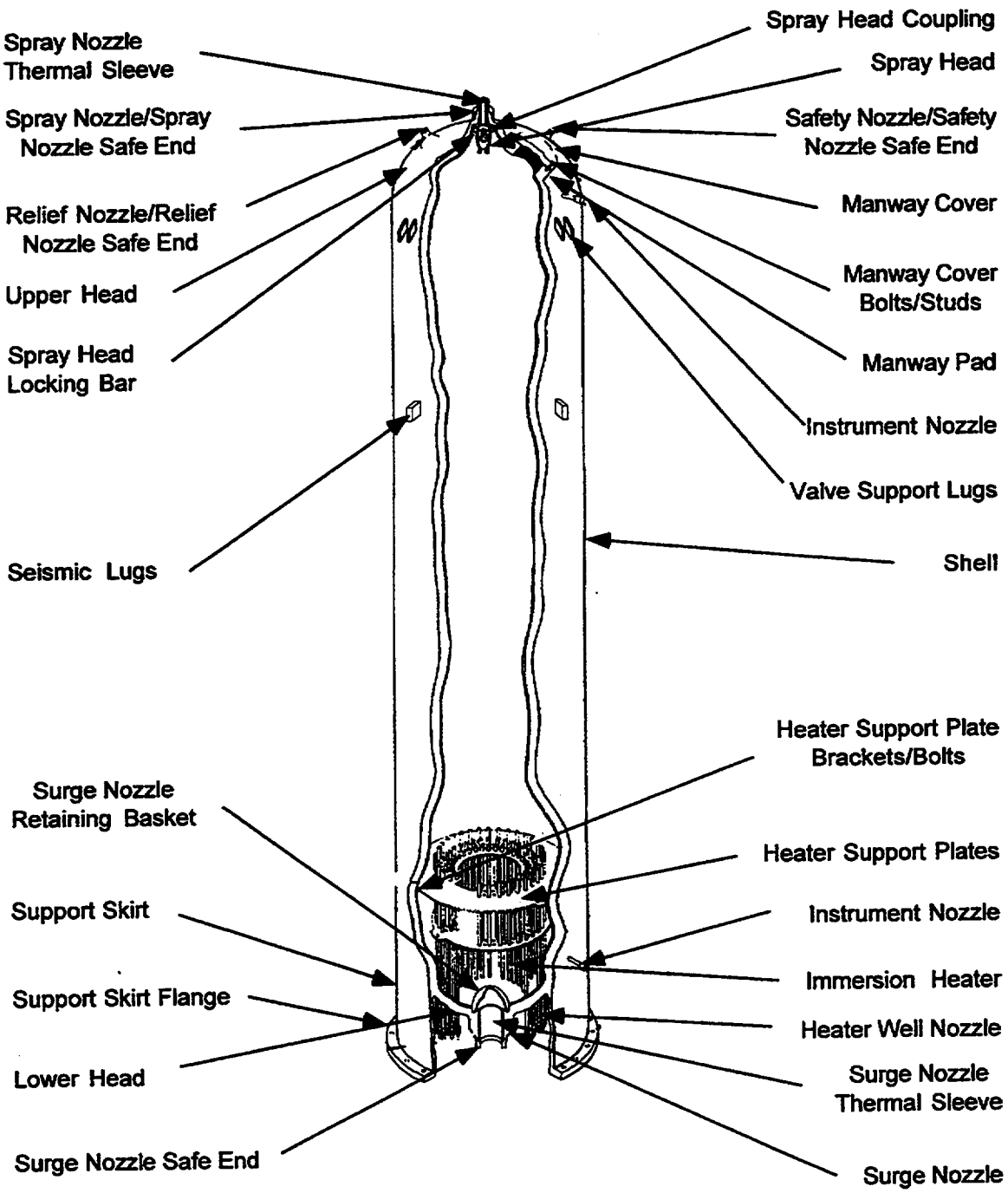

Figure 1-1 Pressurizer and Subcomponents

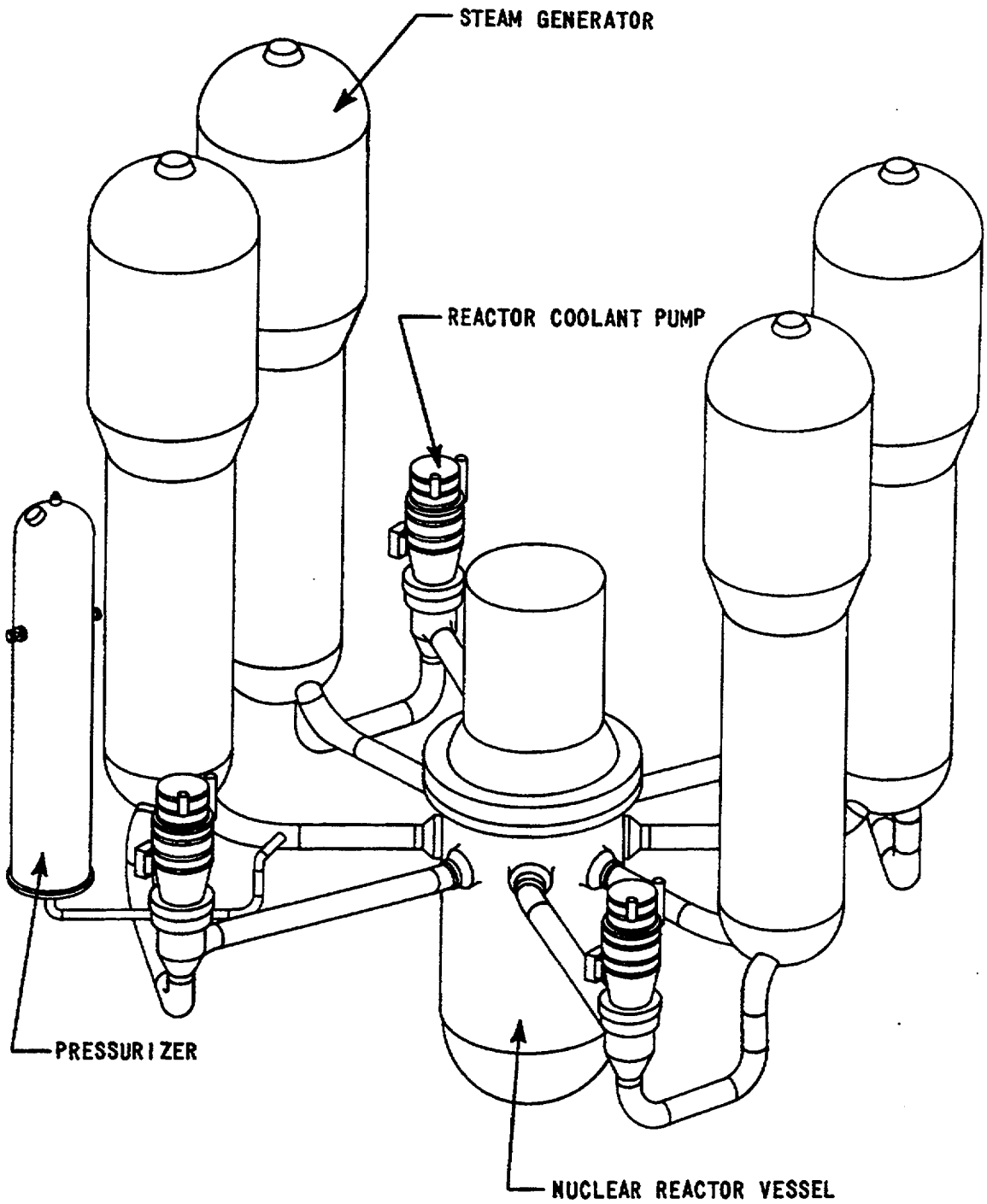

Figure 1-2 Pressurized Water Reactor Coolant System

This Page Intentionally Left Blank

2.0 IDENTIFICATION OF TIME-LIMITED AGING ANALYSES AND AGING EFFECTS

This section identifies the time-limited aging analyses (TLAAs) and aging effects related to the SC. First, the SC is described in general terms. This description includes the boundary of the SC covered in this report. Next, the reason why the SC is within the scope of the license renewal rule is provided. This reason identifies the SC intended functions. The parts or subcomponents of the SC that are subject to an aging management review are then identified and described in detail. These detailed descriptions identify related TLAAs and age-related degradation mechanisms. Finally, aging effects resulting from age-related degradation mechanisms are identified.

2.1 GENERAL DESCRIPTION AND BOUNDARY DEFINITION

The pressurizer is part of the reactor coolant system (RCS) and is located inside containment. The RCS pressure control system consists of the pressurizer vessel equipped with electric heaters, safety valves, relief valves, spray system, interconnecting piping, and instrumentation. In operation, the pressurizer contains saturated water and steam maintained at the desired saturation temperature and pressure by the electric heaters and the spray system. The chemical and volume control system (CVCS) maintains the desired water level in the pressurizer during steady-state operation.

During normal operation, the external electrical network imposes load changes on the plant turbine generator. These load changes cause temperature changes in the RCS. Since the reactor control system, which controls the reactor coolant temperature, does not respond instantaneously during a load transient, the pressure control system is designed to absorb the reactor coolant volume surges and limit pressure variations during the initial transient period prior to an effective response by the reactor control system. The pressurizer performs the following secondary functions:

- Maintains the required reactor coolant pressure (pressure boundary function) during steady-state operation and normal heatup and cooldown

- Limits pressure changes, to an allowable range, that are caused by reactor coolant thermal expansion and contraction during normal plant load changes

During volume insurges that cause pressure increases, the spray system injects subcooled water into the pressurizer steam volume to condense steam and prevent further pressure increases. During volume outsurges that cause pressure decreases, flashing of saturated water in the pressurizer and the generation of steam by immersion heater operation maintains the pressure above a minimum value fixed by reactor core heat transfer design and safety requirements. Self-actuated safety valves are provided to accommodate large volume insurges beyond the pressure limiting capacity of the pressurizer and spray system. The safety valves are capable of handling the most severe volume insurge transient. In addition, power-operated relief valves (PORVs) are set to open at a slightly lower pressure to minimize use of the safety valves.

2.2 SUBCOMPONENTS SUBJECT TO AN AGING MANAGEMENT REVIEW

The subcomponents that specifically support the intended function of the pressurizer are listed in Table 2-1 and are discussed in Section 2.3 of this report.

The reactor coolant intended function supported by the pressurizer is to maintain the reactor coolant pressure boundary (as defined in 10 CFR 54.4(a)(1)(i)).

The cylinder vertical pressurizer vessel is a long-lived, passive component in the RCS (see Figure 1-1). Parts or subcomponents subject and not subject to aging management review are shown in Table 2-1.

2.3 DESCRIPTIONS

2.3.1 Pressurizer Sizes

The size of the Westinghouse pressurizer varies with the plant thermal rating in which it is installed. For most Westinghouse plants, the pressurizer is designed with a fixed inside diameter; the size change is accommodated by a change in shell length to achieve the required internal volume. Most pressurizers have an inside diameter of 84 inches and are commonly referred to as Series 84 pressurizers. In some cases, the pressurizer type or model is determined by the model steam generator used in the plant. This designation has no real meaning except that it indirectly implies the time frame in which the pressurizer was manufactured. Several plants addressed in this report have inside diameters that are not 84 inches. Two plants, South Texas 1 and 2, contain pressurizers referred to as Series 100 due to the 100-inch inside diameter. For these plants, the required volume of 2100 cubic feet was achieved by a change in both diameter and length. In addition, one of the early pressurizers, Haddam Neck, has an inside diameter of 80 inches. The 84 Series, the 100 Series, and the Haddam Neck pressurizers are very similar in design, but vary in size, design details, and materials. Design and material differences are more related to the time in which the unit was designed and built. However, the pressurizer and its subcomponents are identical in regards to function. The evaluation and conclusions of this report encompass and apply to all these plants. The pressurizer sizes are summarized in Table 2-2 and are pictured in Figure 2-1.

TABLE 2-1
SUMMARY OF SUBCOMPONENTS REQUIRING AGING MANAGEMENT REVIEW

SUBCOMPONENT	AGING MANAGEMENT REVIEW REQUIRED?
Lower Head	YES
Surge Nozzle	YES
Surge Nozzle Safe End	YES
Surge Nozzle Thermal Sleeve	YES
Heater Well Nozzle	YES
Immersion Heaters	YES
Support Skirt and Flange	YES
Shell	YES
Seismic Lugs	YES
Valve Support Bracket Lugs	YES
Instrument Nozzles	YES
Upper Head	YES
Spray Nozzle	YES
Spray Nozzle Safe End	YES
Spray Nozzle Thermal Sleeve	YES
Safety Nozzle	YES
Safety Nozzle Safe End	YES
Relief Nozzle	YES
Relief Nozzle Safe End	YES
Manway	YES
Manway Cover	YES
Manway Cover Bolts/Studs	YES
Manway Pad Gasket Seating Surface	YES
Manway Gasket	NO
Surge Nozzle Retaining Basket	NO
Heater Support Plates	NO
Heater Support Plate Bracket	NO
Heater Support Plate Bracket Bolts	NO
Spray Head Locking Bar	NO
Spray Head	NO
Spray Head Coupling	NO

TABLE 2-2
PRESSURIZER TYPES

Pressurizer Size/Volume	Series
1000 cu. ft.	84
1400 cu. ft.	84
1300 cu. ft.	84
1800 cu. ft.	84
2100 cu. ft.	100
800 cu ft.(1)	84
1300 cu. ft.	80-inch ID(2)

Notes:
(1) R.E. Ginna only
(2) Haddam Neck only

2.3.2 Detailed Description of Pressurizer

The following description of the pressurizer subcomponents is representative of the Westinghouse pressurizer. There are some variations from plant to plant with respect to the details; however, these differences do not impact the evaluations addressed in this report. Refer to Figure 1-1 for the major subcomponent locations.

The following subcomponents are within the scope of license renewal because they act as a pressure boundary for the RCS, are designed to operate 40 years (long-lived), and function in a passive manner.

- Lower Head

  The lower head of the pressurizer is hemispherical and fabricated from either manganese-molybdenum steel (SA 533 Grade A Cl 2) plate or cast carbon steel (SA216 WCC). The interior surface is clad with austenitic stainless steel weld metal (E 309L and E 308L). A surge nozzle is located in the lower head of the pressurizer. Also in the lower head are penetrations for immersion heaters.

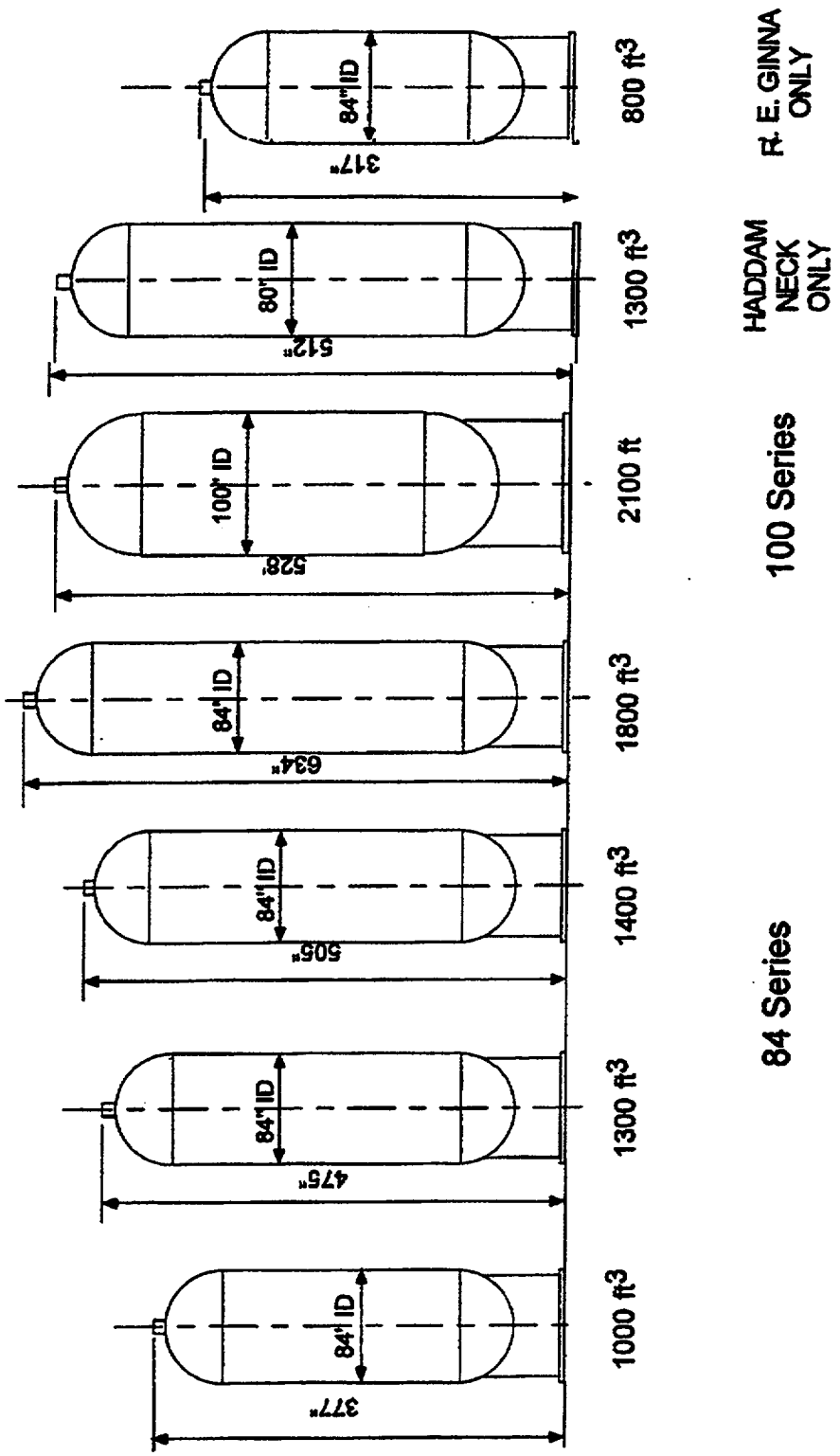

Figure 2-1 Pressurizer Size Differences

- Surge Nozzle

  The surge nozzle transmits volume surges to and from the pressurizer via a line that runs from the hot leg pipe (the reactor vessel outlet). The surge nozzle is either cast integral with the lower head or is a welded-in forging fabricated of SA508 Class 2A material. The surge nozzle is equipped with a stainless steel safe end to provide a welding interface with the surgeline pipe. The safe end is either a type 316 or type 316L stainless steel forging. For most pressurizers, the surge nozzle is buttered with Inconel 82/182 weld metal and then post-weld heat treated (PWHT). The safe end is then welded to the buttering with Inconel 82/182 weld metal. The stainless steel safe end is welded to the nozzle after the PWHT has been completed. Variations of this process are discussed in Subsection 2.6.2.

  The surge nozzle is protected by a thermal sleeve to minimize thermal stresses caused by rapid temperature changes resulting from volume surges. The surge nozzle thermal sleeve is stainless steel and is welded to the nozzle bore cladding with a fillet weld. The thermal sleeve is fabricated from SA-240 Type 304 stainless steel plate, rolled, and welded.

- Heater Well Nozzle

  Heater wells are stainless steel forged penetrations (SA-182 Grade F316) through which the immersion heaters are installed. Heater wells are inserted through holes in the lower head, expanded with mechanical rollers, and welded to the cladding on the inside of the lower head with a partial penetration weld.

- Immersion Heaters (Electrical Heaters)

  The primary function of the immersion heater bundle is to heat and maintain the water in the pressurizer at the saturation temperature that corresponds to the operating pressure. The immersion heater bundle consists of 78 individual heater elements (117 for the 100 Series). Each heater element is inserted through and mounted to a heater well by a 0.19-inch fillet seal weld, which provides a redundant pressure boundary. The heaters extend into the pressurizer interior and are supported by two stainless steel support plates located above the surge nozzle opening. The typical heater bundle is operated in a 480-volt, 60-hertz, three-phase circuit, with each leg of the delta circuit containing one heater. Each heater is rated at 480-volts, 60-hertz single-phase current. Heater assemblies are insulated to withstand a 1000-volt potential between the heater element and the heater well at design temperature. The external end of each heater assembly contains the heater electrical connectors. The heater connectors are water and vapor tight, forming a hermetic seal designed to withstand an internal pressure of 2485 psig at 680°F. Therefore, even in the event a sheath ruptures inside the pressurizer, radioactive water or steam cannot pass through the heater tube and escape into the containment. Two lugs protruding from the heater connector provide terminals for attaching each heater to its electrical supply.

- Support Skirt and Flange

  A support skirt is welded to the lower head, which supports the pressurizer in a vertical position on the foundation. Twenty-four 2.18-inch diameter holes, equally spaced on the bottom flange of the support skirt, provide means for securing the pressurizer to the foundation. The skirt and flange are fabricated from SA-516 Grade 70 carbon steel plate.

- Shell

  The shell consists of cylindrical barrels fabricated of manganese-molybdenum steel (SA 533 Grade A Cl 2) plate clad on the interior surface with austenitic stainless steel weld metal (E 309L and E 308L). The shell contains instrument connections for water level and temperature measurement, a sample connection, valve support lugs, and seismic lugs.

- Instrument Nozzles

  Instrument nozzles are provided on the pressurizer for water level, temperature, and sample measurements. All nozzles are fabricated from the same material and are the same size, making the intended application interchangeable. The nozzles are fabricated assemblies made from a stainless steel tube and a stainless steel forged coupling for interfacing with the connecting piping. The tube is SA 213 Type 316, and the coupling is fabricated from SA 182 Type 304 stainless steel forging.

- Upper Head

  The upper head of the pressurizer is hemispherical in shape and fabricated from either manganese-molybdenum steel (SA 533 Grade A Cl 2) plate or cast carbon steel (SA216 WCC). The interior surface is clad with austenitic stainless steel weld metal (E 309L and E 308L). The head includes relief, safety, and spray nozzles and a manway access pad. The nozzles are either welded-in forgings (plate head) or integral with the head (casting).

- Spray Nozzle

  The spray nozzle assembly consists of the spray head (ASTM A296 Grade CF8M stainless steel casting) threaded to a seamless stainless steel pipe (spray head coupling) welded to the spray nozzle external connection. The spray nozzle forms part of the pressure boundary and is welded to the pressurizer spray line. The spray nozzle is equipped with a stainless steel safe end to provide a welding interface with the spray pipe. The safe ends are either 316 or 316L stainless steel forgings. The spray nozzle is buttered with Inconel 82/182 weld metal and then PWHT. The safe ends are then welded to the buttering with Inconel 82/182 weld metal. The stainless steel safe ends are welded to the nozzle after the PWHT has been completed. Variations of this process are discussed in Subsection 2.6.2.

The spray line is connected to the cold leg of the reactor coolant piping near the discharge side of the reactor coolant pumps (RCPs). During normal operation, a small flow of reactor coolant is permitted to flow through the spray line into the pressurizer. This circulation spray flow prevents the surge line and spray line from cooling below operating conditions and provides for water recirculation and interchange with the RCS. The spray line connection is protected by a stainless steel thermal sleeve, welded to the nozzle bore cladding with a fillet weld, to minimize thermal stresses due to changes in spray water temperature. The thermal sleeve is fabricated from SA 213 Type 304 stainless steel pipe.

- Safety Nozzle

  Three safety valve connections to the steam volume of the pressurizer are provided in the upper head to prevent primary plant pressure from exceeding the design pressure by 10 percent. The safety nozzles have stainless steel safe ends that are welded in the same manner as the surge nozzle. Refer to the surge nozzle description for details.

- Relief Nozzle

  One relief valve connection is provided in the upper head of the pressurizer, the valve being part of the pressure relief system but controlled by a signal from the pressure control system, to reduce the frequency of self-actuated safety valve operation. The relief nozzles have stainless steel safe ends that are welded in the same manner as the surge nozzle. Refer to the surge nozzle description for details.

- Manway

  A 16-inch inside diameter manway opening in the upper head provides access to the pressurizer internals. The normal closure assembly for the manway uses a flexitallic gasket and stainless steel insert plate for the pressure seal. An alternate closure arrangement uses a seal-welded alloy 600 diaphragm. The manway cover (SA 533 Grade B Class 1), which completes the assembly, is secured by 16 bolts (1.875-inch 8UN-2A) manufactured from SA 193 Grade B7, SA 194 Grade 7, or equivalent bolting material.

  The welded diaphragm is an alternate closure method and is used when sealing with the standard gasketed joint is not possible due to gasket seat damage. The welded diaphragm is intended for temporary repairs and/or short term use. The diaphragm is used in place of the insert plate and gasket. Its function is to provide a surface that is resistant to corrosion by primary water and, in conjunction with the seal weld, provide for a leak-tight joint for the manway. It is replaceable and supports the function of the pressurizer in the same way as the manway gasket. The use of Alloy 600 material for this application is considered acceptable to support the pressurizer function.

- Seismic Lugs

  Four seismic lugs are welded to the shell outer diameter to provide lateral support for loads imposed by seismic acceleration. The lugs are fabricated from manganese-molybdenum steel (SA 533 Grade A Cl 2) plate. The lugs are located 90 degrees apart and are welded to the shell with full penetration welds.

- Valve Support Bracket Lugs

  Four lugs 90 degrees apart are provided for supporting safety and relief valves and piping manifolds. The valve supports are actually pairs of lugs and are welded to the shell by full penetration welds. The lugs are fabricated from manganese-molybdenum steel (SA 533 Grade A Cl 2) plate.

The manway gasket, although part of the pressure boundary, is replaceable and not subject to aging effects. The following subcomponents are not within the scope of license renewal because they do not act as a pressure boundary for the reactor coolant.

- Surge Nozzle Retaining Basket

  A surge nozzle retaining basket fabricated from SA-240 Type 304 stainless steel plate surrounds the surge nozzle entrance to the pressurizer. The plate is perforated with 3/8-inch diameter holes on a triangular pitch. The retaining basket keeps particulate matter from entering the pressurizer and was originally intended to disperse the insurge flow. However, operating experience and testing have indicated that insurge flow rates are low enough to keep the colder flow from mixing with the hotter pressurizer inventory, causing stratification in the lower head. This issue is discussed in Subsection 2.6.1.

- Spray Head

  The spray head (ASTM A296 Grade CF8M) is a non-pressure boundary subcomponent and is secured in place by a locking bar (SA 479 Type 304 hot rolled stainless steel bar) Heater Support Plate

- Heater Support Plate

  The heater support plates are SA-240 Type 304 stainless steel plate. The support plates provide lateral support for the heaters that project inside the pressurizer. The plates also function to baffle the surge flow across the heaters to enhance heat transfer to the pressurizer fluid. The lower plate has a solid center to direct the flow around the plate, and the upper plate has a central cutout to redirect the flow back to the center. The plates are supported by stainless steel brackets (SA 240 Type 304) welded to the shell cladding. The plates are attached to the brackets with stainless steel bolts (AISI 304) that allow for radial thermal expansion during operation.

2.3.3 Weld Materials and Weld Processes

Most pressurizers are constructed of plate and forging materials, using quenched and tempered manganese-molybdenum steel, with all internal water wetted surfaces clad with stainless steel.

The filler metals and processes are limited to approved materials and processes covered in ASME Code, Section II, Part C and Section IX, and comply with all the requirements of either Section III NB or Section VIII, as applicable.

Representative filler metals and weld processes used for joining the pressure boundary materials are shown in Figure 2-2. The fabricated shell longitudinal seams are welded with root passes using shielded metal arc welding (SMAW) process with E8018 low hydrogen electrodes followed by submerged arc welding (SAW) for the remainder of the joint. Following PWHT, the internal surfaces are either series SAW clad or SAW-strip clad with 309L stainless steel, producing a nominal clad thickness of 0.19 inch of 18Cr-8Ni-0.08C nominal composition with 5 to 15 percent delta ferrite. The pressurizer barrel girth welds are joined using the same welding processes and filler materials as the longitudinal joint. In most cases, the girth welds are subjected to a PWHT prior to clad restoration.

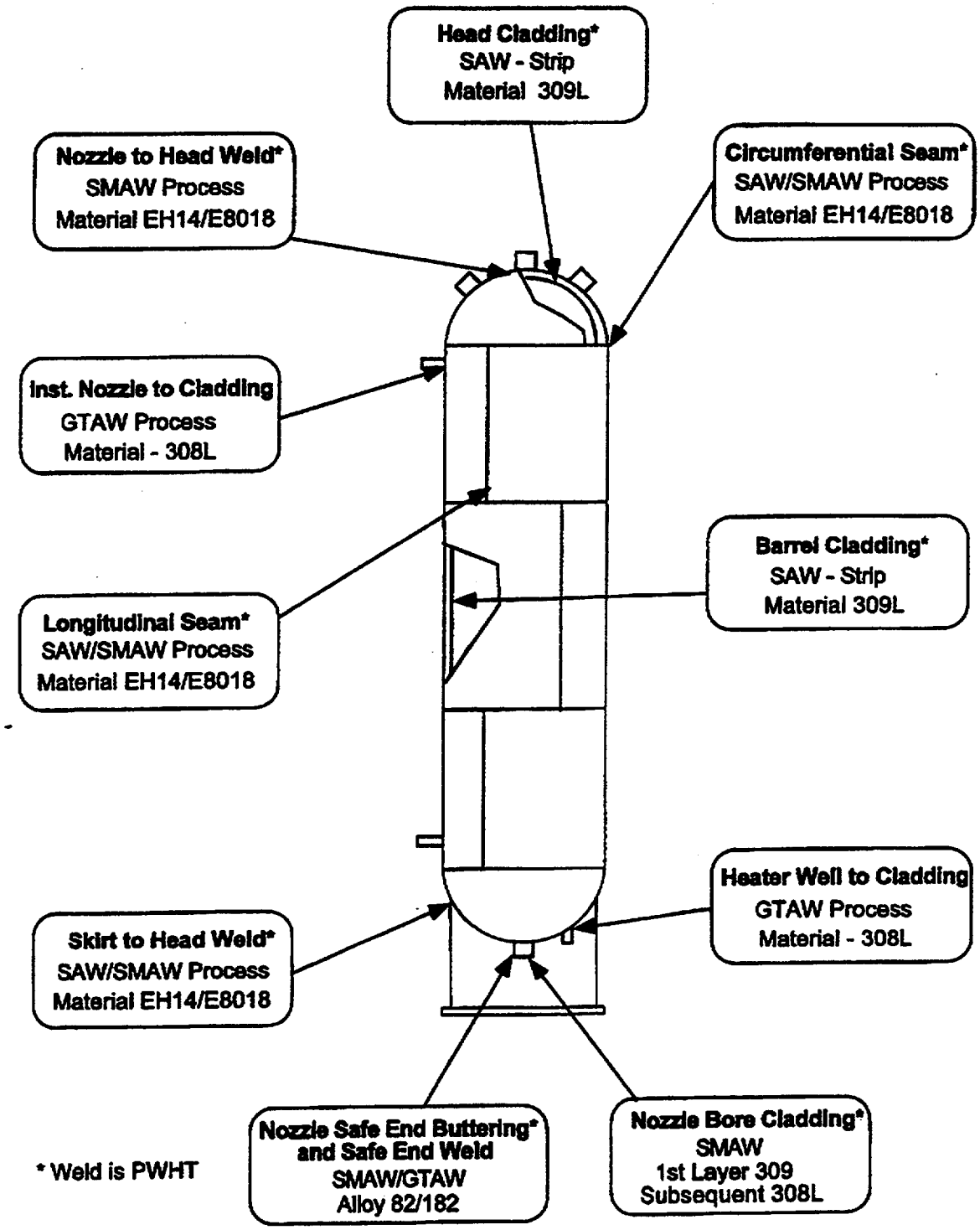

Figure 2-2 Pressurizer Welding Processes and Weld Materials

The spun or forged heads are similarly clad. The lower head is clad with two layers in the vicinity of the heater penetrations to accommodate the Type 316 stainless steel heater penetrations using SAW processes and 309L/308L filler metal. A one-layer 309L clad is used for the upper head. Nozzle bore cladding and nozzle welding are typically performed prior to bowl cladding operations. Heater weld sleeves are welded to the stainless steel cladding and do not receive a PWHT. The immersion heater weld to sleeve is made with 308L filler metal with gas tungsten arc welding (GTAW)/SMAW weld processes.

The nozzle safe ends are buttered using SMAW and GTAW processes with UNS N06082 and W86182 (Alloy 82/182) filler materials. Upon completion of the lower support skirt and flange to the lower pressurizer head girth weld, a separate PWHT is performed. The heads are joined to the shells with SAW/SMAW processes, followed by a stainless steel clad for restoration of the girth weld.

Type 316 stainless steel safe ends are welded to the nozzle buttering using the same process and filler metals as the buttering operations, but are not exposed to a PWHT.

The above operations are representative of the processes and materials used for fabrication of the pressurizer pressure boundary, though a few assembly or process variations may exist among the various units. The assembly and GTAW welding (308L filler metals) of the stainless steel internal subcomponents precede the final girth closure weld. Local induction or resistance PWHT of the girth welds complete the major fabrication operations.

2.4 ENGINEERING AND DESIGN DATA

2.4.1 Design Basis

The pressurizer is part of the reactor coolant system (RCS) and as such is an ANSI Safety Class 1 component designed and fabricated to the ASME Code, Section III, Subsection NB rules for vessels. Haddam Neck, manufactured in the early 1960s, was designed and fabricated to ASME Code, Section VIII.

Each sub-subcomponent of the pressurizer is classified according to the specific requirements of the "Nuclear Safety Criteria for the Design of Pressurized Water Reactor Plants" (ANSI 18.2). For sub-subcomponents of the pressurizer, the following ANSI safety classifications are applicable.

Major Assembly or Subcomponent Design	ANSI Safety Class	Seismic
Shell, including heads, nozzles and safe ends	Class 1	Yes
Heater well	Class 1	Yes
Heater well	Class 1	Yes
Heater support plate, brackets, and bolts	NNS	Yes

2.4.2 Design Temperature and Pressure

The design of the pressurizer vessel and its appurtenances (such as immersion heater and heater pressure seals) is based upon the following steady-state internal conditions:

Maximum Pressure	2485 psig
Maximum Coincident Temperature	680°F

These values are utilized in conjunction with the appropriate values for external pressure and temperature (see Table 2-3) for the design and analysis of the pressurizer.

2.4.3 Design Radiation Levels

The pressurizer design accounts for irradiation of the subcomponents from both internal and external sources during all conditions of nuclear steam supply system (NSSS) operation. The pressurizer external environmental conditions are shown in Table 2-3, and the internal radiation environment is shown in Table 2-4.

2.4.4 Codes, Standards, and Regulations

The following codes, standards, and regulations are representative of those used in the design and manufacture of the pressurizers addressed in this report.

- **American National Standards**

ANSI N45.2.11	Quality Assurance Requirements for the Design of Nuclear Power Plants
ANSI N45.2.13	Quality Assurance Requirements for Control of Procurement of Items and Services for Nuclear Power Plants

TABLE 2-3
CONTAINMENT ENVIRONMENT CONDITIONS
(EXTERNAL TO PRESSURIZER) DESIGN VALUES

Environmental Parameter	Design Conditions		
	Normal & Upset		Extreme
	Max	Min	
Pressure, psig	1.7	-6.0	60
Temperature, °F	130	50	420
Relative Humidity, Δ	100	0	100
Radiation Level, R/hr[1]	50	–	10^7 max

Notes:

1. Radiation levels are gamma only for total integrated dose.

TABLE 2-4
RADIATION ENVIRONMENT INTERNAL TO THE PRESSURIZER

Normal Full-Power Radiation Levels	Gamma – 10^3 R/hr (Max) Neutron – Negligible
Post-Accident Radiation Levels	Gamma Maximum Dose Rate – 10^6 R/hr Total Integrated Dose – 10^7 Roetgens Neutron – Negligible

- **American Society for Nondestructive Testing**

SNT-TC-1A	Recommended Practice for Nondestructive Testing

- **American Society for Testing and Materials**

ASTM A262	Standard Practices for Detecting Susceptibility to Intergranular Attack in Austenitic Stainless Steels

- **American Society of Mechanical Engineers Boiler and Pressure Vessel Code**

ASME II	Materials
ASME III	Rules for Construction of Nuclear Power Plant Division 1 Components
ASME V	Nondestructive Examination
ASME VIII	Pressure Vessels
ASME IX	Welding
ASME XI	Rules for Inservice Inspection of Nuclear Power Plant Components

- **Code of Federal Regulations**

10 CFR 21	Reports of Defects and Noncompliance
10 CFR 50	QA Criteria for Nuclear Power Plants and Fuel
Appendix B	Reprocessing Plants
10 CFR 50 Appendix G	Fracture Toughness Requirements

- **U.S. Nuclear Regulatory Commission**

R.G. 1.29	Seismic Design Classification
R.G. 1.31	Control of Ferrite Content in Stainless Steel Weld Metal
R.G. 1.37	Quality Assurance Requirements for Cleaning of Fluid Systems and Associated Components of Water-Cooled Nuclear Power Plants

R.G. 1.38	Quality Assurance Requirements for Packaging, Shipping, Receiving, Storage and Handling of Items for Water-Cooled Nuclear Power Plants
R.G. 1.43	Control of Stainless Steel Weld Cladding of Low Alloy Steels
R.G. 1.44	Control of the Use of Sensitized Stainless Steel
R.G. 1.50	Control of Preheat Temperature for Welding of Low Alloy Steel
R.G. 1.84	Design and Fabrication Code Case Acceptability ASME Section III, Division 1
R.G. 1.85	Materials Code Case Acceptability ASME Section III, Division 1
R.G. 1.92	Combining Modal Responses and Spatial Components in Seismic Response Analysis
R.G. 8.8	Information Relevant to Ensuring that Occupational Radiation Exposure at Nuclear Power Stations Will Be as Low as Reasonably Achievable

2.4.5 Pressurizer Stress/Fatigue/Fracture Mechanics Analysis

This subsection describes the general criteria and methods used for design basis analyses of most Westinghouse pressurizers. Some older plants may have been based on earlier codes and/or less complicated analysis methods; nonetheless, the general intent of the representative criteria is described here.

The pressurizer subcomponents are analyzed in accordance with the rules given by the ASME Code, Section III. Typically, the Westinghouse Design Specification describes the loading conditions. The pressurizer subcomponents experience three types of loads: internal pressure loads, thermal transients, and external mechanical loads. The internal pressure loads are distributed uniformly over the inside surface of the component. The thermal transient loads are induced by temperature gradients within the component and at material discontinuities. The external loads consist of forces and moments on the nozzles, support skirt and flange, valve support brackets, and seismic lugs.

The loading conditions consist of various combinations of pressure, thermal, and external load components. These loadings are defined for design condition, four different operating conditions, and test conditions. Defined conditions, along with general loading requirements for each, are as follows:

Condition	Required Loadings
Design	Design Pressure + External Loads
Normal and Upset (Level A and B)	Normal and Upset Condition Transients + External Loads
Emergency (Level C)	Emergency Condition Pressures + External Loads + Emergency Condition Transients
Faulted (Level D)	Faulted Condition Pressures + External Loads + Faulted Condition Transients
Test	Test Condition Pressures + External Loads

Tables 2-5 through 2-7 list the representative transients for Level A (normal conditions), Level B (upset conditions), Level C (emergency conditions), and Level D (faulted conditions). Table 2-8 lists the test conditions. These tables list the representative, postulated number of cycles associated with each loading. The transient cycles and fluid descriptions may vary between plants in particular design periods. Details of all plant-specific transients are given in Westinghouse System Standards and also in the pressurizer design specifications. The transients defined for normal, upset, and test conditions are considered in the component fatigue analyses. In most cases, the test conditions have an insignificant effect on the design fatigue usage. The emergency and faulted conditions are evaluated against primary stress limits for catastrophic failure and, if exceeded in actual operation, would require utility action, inspections, and possible correction.

There is a set of external loads associated with each loading condition. The load set for each condition is determined by summing the forces and moments induced by the appropriate load sources. Table 2-9 shows representative external load combinations. The load components are given in the pressurizer design specifications.

For most plants, finite element modeling (FEM) techniques are used to obtain the temperature and stress distributions in the pressurizer subcomponents. The total stresses are then post-processed into membrane, bending, and peak stresses and categorized as primary, secondary, primary plus secondary, and primary plus secondary plus peak stresses per ASME Code, Section III. The fatigue analyses are performed in accordance with the rules given by the ASME Code, Section III.

TABLE 2-5
REPRESENTATIVE LEVEL A AND B
(NORMAL AND UPSET) CONDITIONS

Level A (Normal Conditions) Transients	Cycles
Plant Heatup	200
Plant Cooldown	200
Plant Loading @ 5% per Minute (15 to 100%)	13200
Plant Unloading @ 5% per Minute (100 to 15%)	13200
Small Step Increase (10% Full Power)	2000
Small Step Decrease (10% Full Power)	2000
Large Step Load Decrease (95%)	200
Steady-State Fluctuations – Initial	1.5E5
Steady-State Fluctuations – Random	3.0E6
Feedwater Cycling at Hot Shutdown	2000
Plant Loading between 0 and 15% Power	500
Plant Unloading between 15 and 0% Power	500
Loop Out of Service – Normal Loop Shutdown	80
Loop Out of Service – Normal Loop Startup	70
Boron Concentration Equalization	26400
Turbine Roll Test	20
RCP Startup/Shutdown	3000
RCS Venting	1280
Feedwater Heaters Out of Service	40
Level B (Upset Conditions) Transients	**Cycles**
Loss of Load	80
Loss of Power	40
Partial Loss of Flow	80
Reactor Trip A – No Cooldown	230
Reactor Trip B – Cooldown No SI	160
Reactor Trip C – Cooldown with SI	10
Inadvertent RCS Depressurization	20
Inadvertent Startup of Inactive Loop	10
Control Rod Drop	80
Excessive Feedwater Flow	30
Inadvertent Safety Injection	60
Operational Basis Earthquake (OBE)	20

TABLE 2-6
REPRESENTATIVE LEVEL C (EMERGENCY) CONDITIONS

Condition	Cycles
Small Loss-of-Coolant Accident	5
Small Steam Line Break	5
Complete Loss of Flow	5

TABLE 2-7
REPRESENTATIVE LEVEL D (FAULTED) CONDITIONS

Condition	Cycles
Large Loss-of-Coolant Accident	1
Large Steam Line Break	1
Feedwater Line Break	1
RCP Locked Rotor	1
Control Rod Ejection	1
Simultaneous Feedwater Line Break/Steam Line Break	1
Tube Rupture	1
SSE	1

TABLE 2-8
REPRESENTATIVE TEST CONDITIONS

Test Condition	Cycles	Primary Pressure (psi)
Primary-Side Hydro	10	3107
Secondary-Side Hydro	11	0
Primary to Secondary Leak Test	200	2485
Secondary to Primary Leak Test	80	515
Isolated Tube Leak Test		
Case 1	400	0
Case 2	200	0
Case 3	120	0
Case 4	80	0

Table 2-10 shows the representative calculated design fatigue usage for pressurizer subcomponents based on representative loading conditions described in Westinghouse System Standards and design specifications. Based on these usages values, Table 2-10 also provides an estimate of projected fatigue service life, assuming fatigue life based on the ASME Code design limit of 1.0 fatigue usage and assuming that design transients reflect actual operations. This provides one method to identify subcomponents for which fatigue may require further management. This is discussed in a later section of the report.

In addition to the stress and fatigue analysis, the nonductile failure analysis of the pressurizer subcomponents is performed in accordance with the ASME Code, Section III, Appendix G. Methods of evaluating nonductile behavior are based on linear elastic fracture mechanics of thick sections. These methods are applicable only to ferritic materials. Non-ferrous materials such as Inconel and stainless steel exhibit ductile behavior even at relatively low temperatures and do not require a nonductile failure evaluation.

2.5 TIME-LIMITED AGING ANALYSES

Time-limited aging analyses (TLAAs) are those licensee calculations that:

1. Involve the effects of aging

2. Involve time-limited assumptions defined by the current operating term, for example, 40 years

3. Involve systems, structures, and components within the scope of license renewal

4. Involve conclusions or provide the basis for conclusions related to the capability of the system, structure, or component to perform intended functions

5. Were determined to be relevant by the licensee in making a safety determination

6. Are contained or incorporated by reference in the current licensing basis

Based on the description of the engineering and design of the pressurizer, the TLAAs satisfying all six criteria from the license renewal rule listed above are identified. For the pressurizer, the only calculation meeting all six of the criteria in 10 CFR 54.3 is fatigue.

Table 2-10 has projected the representative 40-year fatigue usage to the ASME design limit of 1.0. Although purely linear extrapolation of the design usage does not necessarily represent usage for the license renewal period, this projection provides one initial method of screening to determine subcomponents that are clearly not fatigue-sensitive. Based on this screening method, the components that are acceptable for more than 60 years of operation are:

- Upper head
- Safety and relief nozzles
- Manway pad

TABLE 2-9
REPRESENTATIVE EXTERNAL LOAD COMBINATIONS

Condition	Load Combinations
Design	Deadweight + Pressure + OBE (1)
Level A (Normal)	Deadweight + Pressure + Thermal
Level B (Upset)	Deadweight + Pressure + Thermal
Level B (Upset) OBE	Deadweight + Pressure + Thermal + OBE
Level C (Emergency)	Deadweight + Pressure (1)
Level D (Faulted 1)	Deadweight + Pressure (1)
Level D (Faulted 2)	Deadweight + Pressure + SSE (1)
Level D (Faulted 3)	Deadweight + Pressure + SSE + Pipe Rupture LOCA, SLB, FLB (1, 2, 3)
Level D (Faulted 4)	Deadweight + Pressure + SSE + Pipe Rupture (1, 2, 4)
Test	Deadweight + Pressure

Notes:

(1) Inside the code-defined region of nozzle reinforcement, thermal piping loads must be included in the analysis.

(2) Deadweight + Pressure + $[(\text{Pipe Rupture - Pressure})^2 + (\text{SSE})^2]^{1/2}$

(3) Pipe rupture (design basis accident [DBA]) is either loss-of-coolant accident, steam line break, or feedwater line break.

(4) Sections outside the limit of reinforcement are not required to be analyzed for this loading condition.

TABLE 2-10
SUMMARY OF REPRESENTATIVE CALCULATED DESIGN FATIGUE USAGE

Subcomponent	Design Fatigue Usage(1)	Projected Fatigue Service (Years)(2)
Upper Head	0.100	400
Shell	0.906(3)	44
Spray Nozzle	0.821	49
Safety and Relief Nozzle	0.161	248
Manway Bolts	0.875	46
Manway Pad	0.141	284
Manway Cover	0.100	400
Valve Support Bracket	0.102	392
Seismic Support Lugs (6)	0.970(3)	41
Lower Head (4)	0.200	200
Heater Well (4)	0.130	308
Immersion Heater	0.122	328
Surge Nozzle (4)	0.955	42
Instrument Nozzle	0.166	241
Support Skirt and Flange (5, 6)	0.736	54

Notes:

(1) Based on 40-year design objective

(2) Projected fatigue service is based on the calculated fatigue usage for 40 years extrapolated to the ASME Code fatigue usage limit of 1.000.

(3) Calculated fatigue usage is based on a conservative assumption that all spray transients will impinge directly on the shell.

(4) Refer to "Industry Issues on Insurges and Outsurges" in Subsection 2.6.1.

(5) The limiting location for the support skirt and flange is the skirt to lower head weld.

(6) In addition to the impact on the primary pressure boundary function, the support function of this subcomponent is also impacted by the fatigue usage qualification.

- Manway cover
- Valve support bracket
- Immersion heater
- Instrument nozzle

The following components may be predicted to exceed the design fatigue usage factor of 1.0 prior to 60 years of operation, without additional evaluation or management:

- Shell
- Spray nozzle
- Manway bolts
- Seismic support lugs
- Lower head (due to insurge/outsurge transients issue)
- Heater well (due to insurge/outsurge transients issue)
- Surge nozzle
- Support skirt and flange

Options to justify continued operation during an extended period of operation follow the requirements of 10 CFR 54.21(c)(1)(ii) and (iii). These options will be described in Section 3.8.

2.6 INDUSTRY ISSUES AND MAINTENANCE HISTORY

Westinghouse pressurizers have experienced relatively few operating and/or maintenance problems during more than 25 years of service. Generic industry issues related to pressurizers and other RCS components were addressed in the NUMARC industry report on PWR RCSs [Ref. 2]. Most of these issues will be addressed with respect to their effects on pressurizer functionality in Section 3.0.

In addition, a few industry issues specifically applicable to pressurizers have been identified in the past few years. These industry issues are:

- Fatigue in the lower head and surge nozzle from reactor coolant insurge and outsurge (refer to Subsection 2.6.1 on insurge and outsurge transients)

- Cracking of Alloy 600 materials in the primary system (refer to Subsection 2.6.2 for discussion of this issue)

- Haddam Neck clad cracking (refer to Subsection 2.6.3)

- Instrument nozzle cracking (refer to Subsection 2.6.7)

Historically, maintenance issues have only been reported in two areas:

- Damage to immersion heater ceramic seals and electrical connectors
- Leaking at manway gasket seal

These are addressed in Subsections 2.6.5 and 2.6.6.

2.6.1 Pressurizer Insurge and Outsurge Transients

Pressurizer vessels in many Westinghouse PWRs are experiencing rapid thermal transients, causing fatigue in the lower head and surge nozzle. As a result, the WOG program, "Mitigation and Evaluation of Pressurizer Thermal Transients Caused by Insurges and Outsurges," MUHP-5060/5061/5062, was initiated. The main program objective is to develop and evaluate generic strategies to mitigate or eliminate thermal transient events that occur in the pressurizer during normal heatup/cooldown evolutions. Based on these strategies, utilities can develop appropriate modifications to operating procedures and practices geared to their specific operating method, and evaluate and document the effect of improved operation. The program addresses this issue from two aspects.

One aspect is to evaluate existing heatup/cooldown operating practices to determine what steps increase the likelihood of an insurge/outsurge event, and to recommend strategies to mitigate such events. Once this risk is determined, strategies within the operating procedures may be identified that have the potential to mitigate the insurge/outsurge cycles. To test the effectiveness of the operating strategies, external temperature monitoring is being performed at three plants for one fuel cycle. Monitoring is currently in progress for three plants.

The second aspect is to determine the effect of the reduced thermal transients on the structural integrity of the pressurizer relative to stress, fatigue, and fracture. The ultimate goal is to reduce the transient loadings that add stress, fatigue, and fracture potential to the pressurizer subcomponents. The second aspect is designed to quantify the benefits of recommended operational improvements on a generic basis. The current objective is to complete the WOG program by the second quarter of 1997. The results will then be appropriately applied as determined by each plant.

2.6.2 Primary Water Stress Corrosion Cracking of Alloy 600

Primary water stress corrosion cracking (PWSCC) of Alloy 600 has been a generic concern of the nuclear power plant industry for reactor, steam generator, and pressurizer components [Refs. 3 and 4]. PWSCC is controlled by the simultaneous occurrence of three independent factors: a susceptible microstructure, a service temperature exceeding a threshold value, and tensile stress level [Ref. 19]. Material microstructure plays a significant role in the occurrence of PWSCC. It has been established in the case of Alloy 600 base metal that the thermomechanical processing history associated with the fabrication shop and the grain boundary carbide coverage are the most important parameters. For example, recent cracking experience with the reactor vessel head penetrations worldwide showed that the microstructure associated with mill annealed heats from Huntington Alloys Inc. (containing grain boundary carbide) in the WOG units is of significantly higher resistance to PWSCC compared to the French heats in the EdF units fabricated by Cv Sandvik containing carbide distribution along prior austenite grain boundaries [Ref. 20].

In the case of Alloy 600 weld metal (82/182), however, the experience has been different. The finer-grained, cast microstructure in the weld is significantly different from the base metal and displayed superior resistance to PWSCC. There have been no incidents of cracking in the Alloy 600 (82/182) weldments reported in the U.S. to date.

PWSCC of Alloy 600 pressurizer penetrations has been of increasing concern since about 1986 in both domestic and foreign pressurizers. Domestic experience with such Alloy 600 PWSCC failures in pressurizers includes:

1986	San Onofre 3 instrument nozzle St. Lucie 2 instrument nozzle
1989	Calvert Cliffs heater well and instrument nozzle
1990	ANO 1 level sensing nozzle
1992	Palo Verde 2 instrument nozzle
1993	Palisades relief nozzle safe end

Westinghouse pressurizers have not been subject to Alloy 600 base metal PWSCC failure because Westinghouse pressurizers do not contain any Alloy 600 base metal or any other nickel alloy base metal [Ref. 5]. However, many Westinghouse pressurizers do contain Inconel 82 and Inconel 182 weld metal (the weld metal is an equivalent to Alloy 600 base metal) in the safe end connections of the surge, safety, spray, and relief nozzles. Figures 2-2 and 2-3 depict the welds in these nozzles. In brief, the connections were made by buttering the ferritic nozzle with Inconel 182 weld metal and then welding the stainless steel safe end to the buttering with Inconel 82 (root pass) and Inconel 182. Table 2-11 shows the pressurizer welds, weld processes, and consumables. Table 2-12 identifies the presence or absence of Alloy 600 base metal and Inconel 82/182 weld metal in all Westinghouse domestic pressurizers [Ref. 5]. The nozzle connections in the older pressurizers were made using stainless steel weld consumables.

The failures that have been observed in non-Westinghouse pressurizer penetrations have been attributed to PWSCC of the Alloy 600 base metal, not the weld metal. Further, no 82/182 weld metals have been the site of crack initiation. Since Westinghouse pressurizers do not use Alloy 600 as a base metal and no evidence of PWSCC exists in PWRs for the 82/182 weld metal, this issue will not be addressed further in this evaluation.

2.6.3 Haddam Neck Pressurizer Clad Cracking

In 1990, the Connecticut Yankee Atomic Power Company (CYAPCO) discovered and reported a 10- to 20-inch wide band of crack-like indications in the Haddam Neck pressurizer cladding. The cracking extended 360 degrees around the circumference of the pressurizer and was located about 1 to 2 feet below the normal water level [Refs. 6 and 7]. NDE investigations established that at least some of the indications penetrated the cladding to the cladding-ferritic

base metal interface. Review of plant operating records revealed that the same band of indications had been reported as early as 1970. The indications may have been caused by a spray of cold water from the spray nozzle onto the cladding during a low water level transient, which the plant operating records show occurred prior to the 1970 inspection that first discovered the indications. Alternatively, the indications may have been present during initial start-up. Whatever the cause of the indications, they apparently have been dormant since at least 1970, and therefore were not caused by an aging related degradation process such as fatigue or stress corrosion cracking. This condition has recently been reviewed to the satisfaction of the U.S. NRC. On the basis that this condition is unique to the Haddam Neck pressurizer, and that it is not an aging related form of degradation, it is not considered further in this evaluation.

2.6.4 Environmental Effects in Fatigue and Related Industry Activities

Since late 1991, much attention has been given to the issue of fatigue qualification for nuclear power plants. Questions associated with this issue were originally raised in regard to plant license renewal. At that time, the U.S. NRC was developing a Branch Technical Position (BTP) [Ref. 8] that would include fatigue evaluation procedures. To account for U.S. NRC concerns regarding environmental effects on the fatigue life of PWRs and boiling water reactors (BWRs), the BTP procedures imposed significant penalties on the ASME Code fatigue calculations. The principal bases for these penalties were studies performed by Argonne National Labs (ANL) and documented in NUREG/CR-5999 [Ref. 9].

TABLE 2-11
PRESSURIZER WELDS, WELDING PROCESSES, AND CONSUMABLES

Part	Weld	Weld Process	Consumable
Safety & Relief Nozzle	Nozzle buttering	SMAW	Inconel 182
	Buttering to safe end	GTAW (root passes) SMAW (fill)	Inconel 82 Inconel 182
Spray Nozzle	Nozzle buttering	SMAW	Inconel 182
	Buttering to safe end	GTAW (root passes) SMAW (fill)	Inconel 182 Inconel 82
	Thermal sleeve weld	GTAW	Inconel 82
Surge Nozzle	Nozzle buttering	SMAW	Inconel 182
	Buttering to safe end	GTAW (root passes) SMAW (fill)	Inconel 82 Inconel 182
	Thermal sleeve weld	GTAW	Inconel 82

Notes:

SMAW = Shielded metal arc welding
GTAW = Gas tungsten arc welding

TABLE 2-12
PRESENCE OR ABSENCE OF ALLOY 600 BASE METAL AND INCONEL 82/182 WELD METAL IN WESTINGHOUSE DOMESTIC PRESSURIZERS

Alpha	Plant	Operation	Alloy 600 Base Metal	Inconel 82/182 Weld Metal
CYW	Haddam Neck	1/68	No	No
RGE	Ginna	7/70	No	No
WEP	Point Beach 1	12/70	No	No
CPL	Robinson 2	3/71	No	No
WIS	Point Beach 2	10/72	No	No
FPL	Turkey Point 3	12/72	No	No
VPA	Surry 1	12/72	No	No
VIR	Surry 2	5/73	No	No
FLA	Turkey Point 4	9/73	No	No
NSP	Prairie Island 1	12/73	No	No
CWE	Zion 1	12/73	No	Yes
WPS	Kewaunee	6/74	No	No
IPP	Indian Point 2	8/74	No	No
COM	Zion 2	9/74	No	Yes
NRP	Prairie Island 2	12/74	No	No
AEP	D C Cook 1	8/75	No	Yes
INT	Indian Point 3	8/76	No	No
DLW	Beaver Valley 1	10/76	No	No
PSE	Salem 1	6/77	No	No
ALA	Farley 1	12/77	No	Yes
VRA	North Anna 1	6/78	No	Yes
AMP	D C Cook 2	7/78	No	Yes
VGB	North Anna 2	12/80	No	Yes
TVA	Sequoyah 1	7/81	No	Yes
APR	Farley 2	7/81	No	Yes
PNJ	Salem 2	6/82	No	No
DAP	McGuire 1	12/81	No	Yes
TEN	Sequoyah 2	6/82	No	Yes
CGE	V C Summer	1/84	No	Yes
DBP	McGuire 2	3/84	No	Yes
SCP	Callaway 1	12/84	No	Yes

TABLE 2-12 (Continued)
PRESENCE OR ABSENCE OF ALLOY 600 BASE METAL AND INCONEL 82/182 WELD METAL IN WESTINGHOUSE DOMESTIC PRESSURIZERS

Alpha	Plant	Operation	Alloy 600 Base Metal	Inconel 82/182 Weld Metal
PGE	Diablo Canyon 1	5/85	No	No
DCP	Catawba 1	6/86	No	Yes
SAP	Wolf Creek	9/85	No	Yes
CAE	Byron 1	9/85	No	Yes
PEG	Diablo Canyon 2	3/86	No	Yes
NEU	Millstone 3	4/86	No	Yes
DDP	Catawba 2	8/86	No	Yes
CQL	Shearon Harris 1	5/87	No	Yes
GAE	Vogtle 1	6/87	No	Yes
CBE	Byron 2	8/87	No	Yes
DMW	Beaver Valley 2	11/87	No	Yes
CCE	Braidwood 1	7/88	No	Yes
TGX	South Texas 1	8/88	No	Yes
CDE	Braidwood 2	10/88	No	Yes
GBE	Vogtle 2	5/89	No	Yes
THX	South Texas 2	6/89	No	Yes
TBX	Comanche Peak 1	8/90	No	Yes
NAH	Seabrook	8/90	No	Yes
TCX	Comanche Peak	7/93	No	Yes
WAT	Watts Bar 1	1996	No	Yes
WBT	Watts Bar 2	Indef.	No	Yes

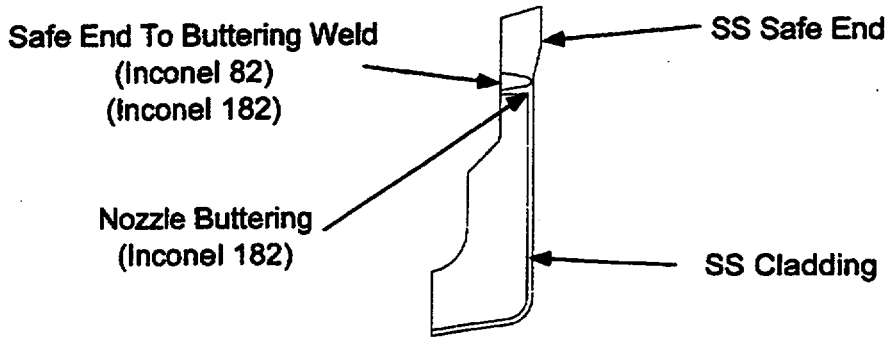

SAFETY & RELIEF NOZZLE

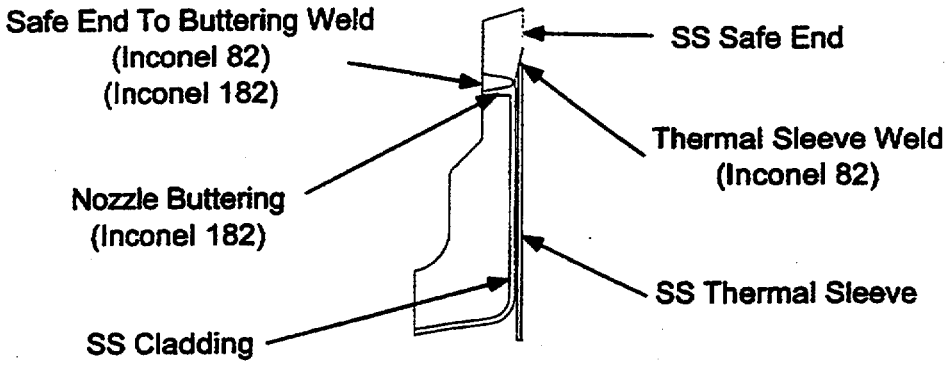

SPRAY NOZZLE

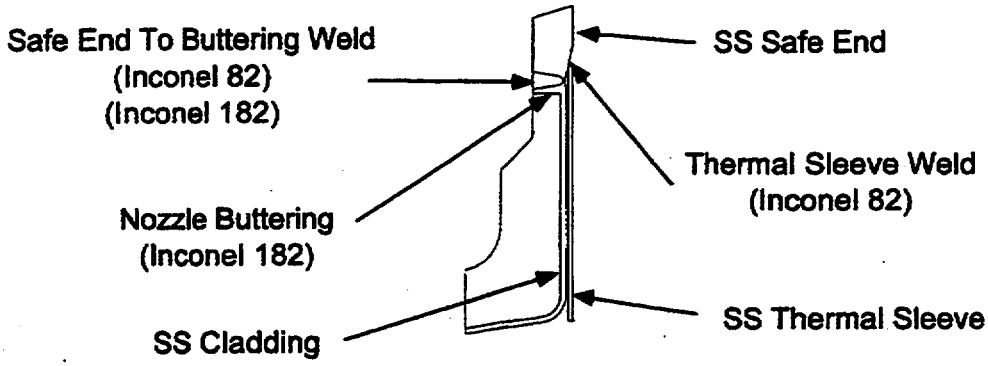

SURGE NOZZLE

Figure 2-3 Schematic of Pressurizer Nozzles Identifying Inconel 82/182 Locations

In July, 1993, the U.S. NRC expanded their concern to the fatigue qualification of operating plants. The draft BTP had been withdrawn and was replaced by a generic technical Fatigue Action Plan (FAP) for operating plants [Ref. 10]. The FAP addressed three issues:

1. Do reactor coolant pressure boundary (RCPB) components of older vintage nuclear power plants that were designed to codes that did not require the explicit fatigue analysis required by the current ASME Code have adequate fatigue resistance?

2. Current test data show that the ASME design fatigue curves may not be conservative for nuclear power plant primary system environments. Is the decrease in fatigue life for components exposed to these environments significant enough to require licensees to use new fatigue curves that consider the environmental effects?

3. What are the appropriate actions to be taken when the calculated fatigue allowable limit has been exceeded (cumulative usage factor [CUF] > 1)?

The results and conclusions of the U.S. NRC FAP were documented in SECY-95-245 [Ref. 11]. To address issues 1 and 2, the U.S. NRC performed evaluations of selected components at seven operating plants to assess the degrees of conservatism in design fatigue evaluations and the impact of the more restrictive "Interim Fatigue Curves" recommended in NUREG CR-5999 [Ref. 12]. Based on the component sample evaluations, the U.S. NRC concluded that no immediate licensee action was necessary since the ASME fatigue limit was not exceeded for most components for the current design life. It was also concluded that, with more detailed analyses and/or measured plant transient data, most remaining components could be shown to be within ASME limits for the current design life. Based on the U.S. NRC office of Nuclear Regulatory Research risk study, a backfit of environmental fatigue data to operating plants was not justifiable.

For operation beyond the current design life, the U.S. NRC concluded that FAP issues should be evaluated further, focusing mainly on components in the reactor coolant pressure boundary that suffer high fatigue usage.

> The staff will consider, as part of the resolution of Generic Safety Issue (GSI) 166, "Adequacy of Fatigue Life of Metal Components," the need to evaluate a sample of components with high fatigue usage, using the latest available environmental fatigue data, to ensure that RCPB components will continue to perform their intended functions and maintain a high level of reliability during the extended period of operation for license renewal. If GSI 166 has not been resolved before the issuance of a renewal license, the applicant would have to submit ... its technical rationale for concluding that the effects of fatigue are adequately managed for the extended period or until the resolution of GSI 166 becomes available. [Ref. 11]

In addressing Issue 3 in SECY-95-245, the U.S. NRC recommended guidance from Generic Letter (GL) 91-18, "Information to Licensees Regarding Two U.S. NRC Inspection Manual Sections on Resolution of Degraded and Nonconforming Conditions and on Operability," for actions that a licensee can take to resolve the nonconforming condition. It also refers to a

nonmandatory Appendix being developed by ASME Section XI Task Group on Operating Plant Fatigue Assessment that specifies actions to be taken if the CUF exceeds unity. When the Appendix is published, the U.S. NRC will determine the acceptability of its approach.

In parallel with the U.S. NRC activities, the Pressure Vessel Research Council (PVRC), at the request of the ASME Board on Nuclear Codes and Standards (BNCS), is also examining the effects of RCS environments on existing ASME Section III fatigue curves and Section XI fatigue crack growth curves. Results have indicated that the significance of the PWR and BWR environments is dependent on the combination of several variables: dissolved oxygen, temperature, material sulfur content, loading strain rates, strain amplitudes, and coolant flow rate [Ref. 17]. This work, which is still ongoing, is being addressed by a Steering Committee on Cyclic Life and Environmental Effects (CLEE), under which three working groups exist: Working Group on S-N Data Analysis, Working Group on da/dN Analysis and Working Group on Evaluation Methods.

Other industry studies have also continued on the fatigue issue. The Nuclear Energy Institute (NEI) has worked with industry groups and the U.S. NRC through the NEI Fatigue Task Force. The task force documented its conclusions on the U.S. NRC fatigue concerns in the "Fatigue White Paper" [Ref. 13]. The task force reached conclusions similar to those of the U.S. NRC.

With respect to license renewal for Westinghouse PWR components, including pressurizers, the following observations are considered to be significant:

- The conclusions of the FAP do not provide closure for the fatigue issues in the case of license renewal especially for environmental effects in fatigue.

- The resolution of GSI 166, "Adequacy of Fatigue Life of Metal Components," and Generic Issue 78, "Monitoring of Design Basis Transient Fatigue Limits for Reactor Coolant System," by the U.S. NRC should provide regulatory information regarding the need for additional component evaluations using appropriate environmental fatigue data. (Generic Issue 78 has been resolved with reference to the Fatigue Action Plan for the transient monitoring concern.)

- A request for license renewal before the resolution of GSI 166 must provide technical rationale to conclude that the effects of fatigue are adequately managed for the extended period or until the resolution of GSI 166 becomes available.

Therefore, since the effects of fatigue are identified to be potentially significant for the pressurizer, industry activities intended to resolve the fatigue issues identified in the U.S. NRC completion of the Fatigue Action Plan should be evaluated relative to the fatigue management plan. Specific industry activities to evaluate include:

- Guidance from the NEI License Renewal Working Group and related NEI technical issue tracking efforts

- Recent developments on inservice inspection and flaw evaluation from ASME Code, Section XI bodies

- Recommendations to the ASME Code committees from the PVRC Steering Committee on cyclic life and environmental effects

2.6.5 Leaking of Manway Gasket Seals

Leaking of manway gasket seals is not considered to be a design issue. Leakage almost always can be attributed to improper maintenance. Improper cleaning of gasket sealing surfaces and bolts, or improper lubrication and application of bolt load, are the most common causes. Most occurrences have been eliminated by instituting proper procedures and replacing the gasket. Manway leakage is generally local and is confined to the reinforced manway pad. In cases where the stainless steel gasket surface has been damaged, remachining to restore the required surface has been utilized with good success. General corrosion of the upper head and shell beyond the reinforced manway pad has not been a problem. Although corrosion of the carbon steel manway pad has been observed, it is local in nature and is readily addressed on a case-by-case basis. This issue has no direct impact on the pressurizer function and need not be addressed further.

2.6.6 Immersion Heater Damage

As with leaking manway gasket seals, immersion heater damage can be attributed to improper maintenance procedures. This is normally found through an observance of physical damage to the heater connectors or through resistance checks of suspected heaters. These heaters are designed to be replaced, if necessary, and will not have any impact on the pressurizer intended function. In addition, there is redundant pressure boundary protection formed by the heater well and the heater seal weld so that the pressurizer function is not affected (see Subsection 2.3.2).

2.6.7 Instrument Nozzle Cracking

Surry Unit 1 reported through-wall circumferential cracks on two of the upper pressurizer instrument level nozzles located just above the transition between the shell and the upper head circumferential weld. Circumferential crack-like indications were located 1/2 to 3/4 inch from the inner diameter of the nozzle end and were visible by liquid penetrant and boroscopic inspection. The indications appeared to be limited to a zone between the 316 stainless steel nozzles and the 309L vessel shell cladding weld and the nozzle expanded transition zone.

This condition was reported by Virginia Power personnel on September 12, 1995, during a scheduled refueling outage where a normal visual walk-through inspection was performed to detect potential leaking connections on the pressurizer. The reported visual evidence consisted of boric acid crystals and corrosion products deposited on the outside diameter of the pressurizer instrument nozzles.

Engineering analysis has indicated that leakage rates are well below the 1 gpm allowed by the Technical Specifications. The highly unlikely event of a catastrophic failure of an instrument tap is covered by the existing small-break loss-of-coolant accident analysis.

Based on searches of INPO operating experience on the Nuclear Network and NPRDS by Virginia Power, as well as on discussions with Westinghouse, this appears to be the first report of a crack in a Westinghouse pressurizer instrument connection made of 316 stainless steel material. The cause of the cracking is under investigation by Virginia Power and Westinghouse. At this time, pressurizer instrumentation nozzle cracking has not been identified as a generic age-related degradation effect that requires management specifically for the license renewal period. Nevertheless, the issue will be addressed appropriately in individual renewal applications.

2.7 AGING EFFECTS

Aging refers to the time-dependent aging degradation of a material or component, which results in a decrease in the ability of the material or component to perform its design function. The mechanism by which aging related degradation occurs may be driven by physical, mechanical, or chemical processes, i.e., by interaction of the material or component with its physical, mechanical, or chemical environment. The specific effects selected for assessment are those which experience has shown to be significant or potentially significant to the performance of nuclear power plant components–pressurizers, steam generators, reactors–as well as those effects recognized as being life-limiting during initial design of the pressurizer. These effects may be grouped into the following general categories:

- Fatigue
- Corrosion/SCC/PWSCC
- Irradiation embrittlement
- Thermal aging
- Erosion and erosion/corrosion
- Wear
- Creep and stress relaxation

Following a discussion of these effects in Section 3.0, an assessment of the applicability of these aging effects to the individual pressurizer subcomponents is summarized in Section 3.9. Creep is not addressed in detail in Section 3.0 since pressurizer operating temperatures are well below the range where creep would be significant for the materials under consideration. Section 3.8 summarizes the general requirements for any recommended time-limited aging analyses.

This Page Intentionally Left Blank

3.0 AGING MANAGEMENT REVIEW

In this section, mechanisms are described to determine aging effects, and all identified effects are evaluated to identify potential degradation of the pressurizer intended function. This section also evaluates the time-limited aging analyses (TLAAs) in Section 3.8. All effects and TLAAs that require management during an extended period of operation are identified.

An aging effect is defined to be significant for a component if, when allowed to continue without an effective program, the capability of the component to perform its intended function throughout the license renewal term would be compromised. The potential significance of an aging effect was determined by examining the component design features (Section 2.4), the component design bases (Section 2.4), and its susceptibility to the aging effect being considered. If it could be shown that the component is either not susceptible, or is susceptible to such a small degree that the component's safety function is maintained throughout the license renewal term, then the component/aging effect combination is not significant.

The effects of potentially significant age-related degradation mechanisms are examined in terms of the capability of effective programs for maintenance, inservice inspection, surveillance, testing, and analytical assessment to manage the effects. Combinations of effects and components for which generic program elements effectively manage the aging effects are provided in Section 4.0 of this report.

License renewal applicants intending to reference these generic conclusions are responsible for a review of plant-specific features, including appropriate current licensing basis (CLB) documents and information, to ensure that there are no deviations from the assumptions and criteria used in this evaluation.

3.1 FATIGUE

3.1.1 Mechanism Description

Fatigue is produced by periodic application of a load or stress by mechanical, thermal, or combined effects. It has been recognized for many years that a metal subjected to a repetitive or fluctuating stress will fail at a stress much less than that required to cause fracture during a single application of load. The important factor in fatigue failure is stress repetition.

3.1.2 Aging Effect Evaluation

Fatigue in the pressurizer subcomponents (see Table 2-10) is produced by stresses due to mechanical and/or thermal loads. Some of the pressurizer subcomponents operate at high levels of both static and repeated stress and have high calculated design fatigue usage, predominantly due to thermal environments during transient conditions.

High calculated fatigue usage in the surge nozzle is predominantly due to thermal cycling produced by insurge (cold shock) and outsurge (hot shock) on the nozzle during transients. Insurges and outsurges may also produce transients in the lower head because the combination

of high temperature difference and low flow rates causes the hot pressurizer fluid and colder insurging fluid to stratify. The stratification interface moves along the inner surface of the vessel, essentially shocking the material with the hot-to-cold temperature difference of the top and bottom fluids. These alternating transient conditions result in high calculated fatigue usage. The lower head and surge nozzle may also be subject to additional insurge and outsurge transients that may cause additional calculated fatigue usage. This issue is discussed in Subsections 2.6.1 and 3.9.2.

The spray nozzle experiences saturated steam environment and then subcooled environment. This alternating thermal condition causes significant thermal stress excursions in the spray nozzle.

The pressurizer shell and seismic support lugs have high calculated fatigue usage. This is primarily the result of thermal stresses occurring in the barrel and at the seismic lug location due to spray impingement. It has been shown that the spray droplets do not impinge on the shell for most transient conditions. Therefore, the thermal condition of the spray is not as severe as was originally analyzed. If a re-analysis using more appropriate boundary conditions were performed, the thermal stresses could be reduced, and thus calculated fatigue usage for the shell and seismic lugs will be reduced substantially.

The pressurizer manway bolts have a high calculated fatigue usage due to the differential movements of the pad and cover during heatup and cooldown. The bolts have been analyzed with conservative assumptions leading to a high design fatigue usage. If a new analysis were to be performed using more appropriate boundary conditions, the result would be lower stresses and a reduction in calculated fatigue usage for the manway bolts. Other options to extend bolt fatigue life are actual testing to demonstrate acceptable bolt life or replacement at specified intervals.

The pressurizer support skirt and flange have high calculated fatigue usage due to conservatism built into the analysis model and the application of mechanical loads. A new analysis using appropriate boundary conditions would result in lower stresses and a reduction in calculated fatigue usage.

3.1.3 Aging Effect Management

The effects of fatigue can potentially result in fatigue cracking. These effects are best managed by a program that includes options to evaluate both causes and potential effects of fatigue. The fatigue management program will identify truly fatigue-sensitive locations based on realistic loadings throughout the license renewal period and provide options to manage loadings and/or effects that include preventive and corrective actions for excessive fatigue. The details of such a program are described in Section 4.2.

3.2 CORROSION/STRESS CORROSION CRACKING (SCC)

3.2.1 Mechanism Description

Corrosion is the degradation of a material by chemical or electrochemical reaction with its environment. There are many forms or effects of corrosion depending on the material and environment. The extent of corrosion may be general or localized. General corrosion refers to a uniform attack over surfaces of the material and results in the thinning of the material, usually at a very slow rate. General or uniform corrosion can be managed by allowing sufficient excess material thickness to accommodate the amount of material expected to be lost during the service lifetime of the component. Localized corrosion is usually more difficult to manage. The forms of localized corrosion include pitting, crevice corrosion, and stress corrosion cracking (SCC). Pitting corrosion is a microscopically localized form of corrosion associated with a specific chemical species in the environment or local conditions of the surface of the material. Crevice corrosion results from local environment conditions in the restricted region of a crevice being different and more aggressive than the bulk environment.

SCC is a localized nonductile failure caused by a combination of stress, susceptible material, and an aggressive environment. Microscopically, the SCC failure mode can be either intergranular (IG) or transgranular (TG). IGSCC is generally associated with a sensitized material. Sensitization of unstabilized austenitic stainless steel is characterized by a depletion of chromium at the grain boundaries with an accompanying precipitation of a network of chromium carbides. Because the depletion of chromium at or near grain boundaries is caused by the formation of carbides, the carbon content of the austenitic stainless steel is critical as to the susceptibility of the material to sensitization. If a given grade of austenitic stainless steel is considered susceptible to sensitization because of carbon content, it will not become sensitized unless cooled slowly through the sensitization temperature range, 482°C to 927°C, during heat treatment. Sensitized austenitic stainless steel is susceptible to IGSCC in an oxidizing environment.

TGSCC is caused by aggressive chemical species, e.g., caustics or chlorides, especially if coupled with oxygen and combined with stresses approaching the yield strength or greater.

3.2.2 Aging Effect Evaluation

To date, operational experience in Westinghouse pressurized water reactors (PWRs) has shown that general corrosion and stress corrosion are not a particular concern for pressurizer materials. The austenitic stainless steel is not susceptible to general corrosion in the benign PWR primary coolant because it passivates to form protective layers that mitigate the potential for corrosion degradation.

Since austenitic steels resist corrosive attack in a PWR environment by quickly oxidizing to form a protective film, all internal surfaces of the pressurizer fabricated from austenitic stainless steel are not subject to significant corrosive degradation. This resistance extends to crevice regions, where an aggressive environment has the potential to cause localized corrosion, even for film-forming materials. The only recognizable crevice geometry internal to the pressurizer is

between the heater sheath and the heater well, the surge nozzle and its thermal sleeve, and the spray nozzle and its thermal sleeve. Hydrogen plays an important role in the control of crevice corrosion by minimizing the adverse effects of oxygen. Hydrogen overpressure in the RCS provides adequate protection against crevice corrosion for the internal surfaces of the pressurizer. Therefore, corrosion is nonsignificant for the internal surfaces of the pressurizer and no further evaluation is required with respect to general corrosion.

As a result of the protection afforded by the combination of austenitic stainless steel cladding on the internal surface of the pressurizer and the oxygen-controlled PWR coolant environment, corrosion wastage of any affected external surfaces of the pressurizer caused by leakage of borated water is the only potential concern related to corrosion for the pressurizer. Although a potential concern, current activities monitor for leakage of borated water and take corrective actions in a timely manner. As a result, corrosion would not be allowed to continue, and an aging effect (material wastage) could not occur that would prevent the performance of the pressurizer intended function. These activities include the plant boric acid wastage surveillance program, implemented in accordance with the response to U. S. NRC Generic Letter 88-05, "Boric Acid Corrosion of Carbon Steel Reactor Pressure Boundary Components in PWR Plants." This program includes: (1) determination of principal locations where coolant leaks that are smaller than allowable specification limits could cause degradation of the pressure boundary by boric acid corrosion; (2) visual examinations that are integrated into the VT-2 examinations conducted during system pressure tests; and (3) corrective actions to prevent recurrences of this type of corrosion. The ASME Code, Section XI, Subsection.

IWA-2212 stipulates that "VT-2 examinations are conducted to detect evidence of leakage from pressure retaining components as required during the conduct of system pressure test." Relevant conditions for the VT-2 examinations are described in Subsection IWB-3522.1 including "areas of general corrosion of a component resulting from leakage" and "discoloration or accumulated residues on surfaces of components that may be evidence of borated water leakage." Supplemental examinations, engineering evaluations, and repair/replacement are acceptable options for addressing any detected relevant conditions.

Leakage of primary coolant water could provide the aggressive environment needed for SCC in the bolting materials. For quenched and tempered low alloy steels used for closure bolting such as alloy 4140 steels (e.g., SA 193 Gr B7) material susceptibility to SCC is controlled by its yield strength. EPRI report NP5769 [Ref. 16] indicates that SCC should not be a concern for closure bolting such as alloy 4140 steel in nuclear power plant applications if the specified minimum yield strength is below 150 ksi. The specification for SA193 Grade B7 bolts require a minimum yield strength of 105 ksi.

Operating experiences and existing data indicate that SCC failure should not be a significant issue for the bolting materials of SA193 Grade B7, as used for the pressurizer manway bolts.

For IGSCC to occur in austenitic stainless steel, three things must be present: a susceptible material, stress approaching or exceeding the yield strength of the material, and an aggressive environment such as an oxidizing environment. In the absence of one of the three above conditions, IGSCC will not occur; however, intergranular attack (IGA) can occur without a

high stress. As to a susceptible material, Westinghouse has a policy of prohibiting the use of sensitized austenitic stainless steel in the pressurizer and associated components. Sensitization can be prevented by reducing the exposure of susceptible materials to the sensitization temperature range, 900°F to 1700°F to short times (to quench the material after solution annealing above the sensitization temperature range). Westinghouse recognizes that in construction of pressurizer components, they must be subjected to welding. To minimize the time that the components were heated into the sensitization temperature range, 900°F to 1700°F, Westinghouse controls the heat input during welding. The maximum interpass temperature is limited to 350°F to avoid sensitization of the pressurizer and associated components materials. Even though the Westinghouse pressurizer stainless steel components are procured in the solution annealed conditions and the heat input is controlled during welding, Westinghouse requires that IGA tests be performed in accordance with ASTM A262.

In addition to the procedures Westinghouse takes to eliminate or reduce the susceptibility of the materials to sensitization, Westinghouse procedures prevent sensitized stainless steels from coming in contact with an aggressive environment. Westinghouse specifies that the reactor coolant be rigorously controlled, particularly with regards to oxygen, chlorides, and other halogens.

The efficiency of the above practice in the prevention of IGSCC and IGA has been demonstrated by years of operating experience without exhibiting IGSCC or IGA in the pressurizer component. Therefore, the aging effects from IGSCC and IGA do not degrade the pressurizer pressure boundary components intended functions. By eliminating sensitized austenitic stainless steel materials, the potential occurrence of SCC due to any sulfate from demineralized resins and the oxygen level prior to and during shutdown is minimized. In laboratory experiments, even in cases where severely sensitized austenitic stainless steel has been deliberately exposed to PWR coolant, no intergranular attack has been observed.

The pressurizer subcomponents that are potentially susceptible to SCC are the safe end connections on the safety, relief, spray, and surge nozzles. The safe end material in all Westinghouse pressurizers is either 316 stainless steel or 316L stainless steel, both of which provide greater resistance to SCC than does 304 stainless steel. The other differences between the nozzles for various plants relate to the weld metal and whether or not the safe end experienced a post-weld heat treatment (PWHT), which might have induced sensitization. These variations are identified in Table 3-1. For the safe ends welded to the nozzles with Inconel 82/182, the nozzles were buttered with Inconel 182 and post-weld heat treated and then the safe ends were welded to the buttering with Inconel 82/182 with no subsequent PWHT. The issue of PWSCC of Alloy 600 base and weld materials is addressed in Subsection 2.6.2. For safe ends welded to the nozzles with stainless steel weld consumables, the safe ends were welded directly to the ferritic nozzles (no buttering of the nozzles) and then post-weld heat treated. The exceptions to this were the pressurizers at Prairie Island 1 and 2, and Kewaunee. For these three pressurizers, the safe end connections were initially welded with stainless steel weld consumables. Then the safe ends were removed (cut off) leaving a layer of the initial weld metal on the nozzle that had been post-weld heat treated. New safe ends were then welded with stainless steel to the remnant of the initial weld metal with no subsequent PWHT.

Concern for SCC of the safe end connections is usually focused on the stainless steel safe end itself and whether or not it has been post-weld heat treated, which might induce sensitization. However, the weld metal buttering is always post-weld heat treated, and the welding of the safe end to the nozzle or nozzle buttering could induce a zone of sensitization in the safe end, even if the safe end is not subsequently post-weld heat treated.

The significance of a recent incidence of cracking and leakage in the pressurizer instrument nozzle at Surry 1 station should be noted. After 24 years of operation, two instrument nozzles fabricated from cold worked 316 stainless steel exhibited cracking and leakage at the Surry 1 station. The leakage was detected during the 1995 refueling outage of the unit. The two affected nozzles were located in the steam bubble. The instrument tap located in water was not affected. The nozzles were hard rolled into the pressurizer shell prior to welding. The leakage originated at the hard rolled region near the weld. Metallurgical investigation of the affected nozzle sample extracted from the shell by the utility could not establish the root cause since the leakage region was lost during sample extraction. Metallurgical examinations confirmed the presence of minor transgranular and intergranular cracking on the ID surface of the nozzle and intergranular cracking on the OD surface. No evidence of fatigue or contaminants was identified. The Surry 1 pressurizer nozzle incidence is the first such incidence noted in the industry. Westinghouse safety evaluation concluded that it is not a safety issue and that leakage is within inventory makeup limits. It is recognized that since the leakage involved two nozzles and, further, since a root cause could not be conclusively established, additional investigations and inspections are required to assess the generic implications of the issue. Since the occurrence of the Surry 1 incidence, it was reported that the instrument nozzles at Farley 1 and Vogtle were visually inspected and no leakage was found.

PWSCC of pressurizer penetrations was discussed above as an industry issue. To date, the failures have been in Alloy 600 base metal, not in Inconel 82/182 weld metal. The weldments have contributed to the failure, at least in some cases, by inducing distortion of the base metal and by inducing residual stresses, but the weld metal has not been the site of initiation of failure. Indeed, except for some early experience in BWRs, PWSCC of Inconel 82/182 weld metal has not been an issue in the PWR environment of the pressurizer, steam generator, or reactor vessel components. As noted above, Alloy 600 base metal is not present in any Westinghouse pressurizer, but Inconel 82/182 weld metal does exist in nozzle safe end connections in many, but not all, Westinghouse pressurizers.

TABLE 3-1
PRESSURIZER SAFE END MATERIALS AND PWHT

Alpha	Plant	Safe End Mat'l.	Weld Metal	Safe End PWHT
CYW	Haddam Neck	316	Stainless Steel	Yes
RGE	Ginna	316	Stainless Steel	Yes
WEP	Point Beach 1	316	Stainless Steel	Yes
CPL	Robinson 2	316	Stainless Steel	Yes
WIS	Point Beach 2	316	Stainless Steel	Yes
FPL	Turkey Point 3	316	Stainless Steel	Yes
VPA	Surry 1	316	Stainless Steel	Yes
VIR	Surry 2	316	Stainless Steel	Yes
FLA	Turkey Point 4	316	Stainless Steel	Yes
NSP	Prairie Island 1	316L	Stainless Steel	No(1)
CWE	Zion 1	316L	82/182	No
WPS	Kewaunee	316L	Stainless Steel	No(1)
IPP	Indian Point 2	316L	Stainless Steel	Yes
COM	Zion 2	316L	82/182	No
NRP	Prairie Island 2	316L	Stainless Steel	No(1)
AEP	D C Cook 1	316L	82/182	No
INT	Indian Point 3	316L	Stainless Steel	Yes
DLW	Beaver Valley 1	316	Stainless Steel	Yes
PSE	Salem 1	316	Stainless Steel	Yes
ALA	Farley 1	316L	82/182	No
VRA	North Anna 1	316L	82/182	No
AMP	D C Cook 2	316L	82/182	No
VGB	North Anna 2	316L	82/182	No
TVA	Sequoyah 1	316L	82/182	No
APR	Farley 2	316L	82/182	No
PNJ	Salem 2	316L	Stainless Steel	Yes
DAP	McGuire 1	316L	82/182	No
TEN	Sequoyah 2	316L	82/182	No
CGE	V C Summer	316L	82/182	No

TABLE 3-1 (Continued)
PRESSURIZER SAFE END MATERIALS AND PWHT

Alpha	Plant	Safe End Mat'l.	Weld Metal	Safe End PWHT
DBP	McGuire 2	316L	82/182	No
SCP	Callaway 1	316L	82/182	No
PGE	Diablo Canyon 1	316	Stainless Steel	Yes
DCP	Catawba 1	316L	82/182	No
SAP	Wolf Creek	316L	82/182	No
CAE	Byron 1	316L	82/182	No
PEG	Diablo Canyon 2	316L	82/182	No
NEU	Millstone 3	316L	82/182	No
DDP	Catawba 2	316L	82/182	No
CQL	Shearon Harris 1	316L	82/182	No
GAE	Vogtle 1	316L	82/182	No
CBE	Byron 2	316L	82/182	No
DMW	Beaver Valley 2	316L	82/182	No
CCE	Braidwood 1	316L	82/182	No
TGX	South Texas 1	316L	82/182	No
CDE	Braidwood 2	316L	82/182	No
GBE	Vogtle 2	316L	82/182	No
THX	South Texas 2	316L	82/182	No
TBX	Comanche Peak 1	316L	82/182	No
NAH	Seabrook 1	316L	82/182	No
TCX	Comanche Peak 2	316L	82/182	No
WAT	Watts Bar 1	316L	82/182	No
WBT	Watts Bar 2	316L	82/182	No

Notes:

1. Non PWHT safe ends replaced the original safe ends, but were welded to the remains of the previously heat-treated stainless steel weld.

Service experience to date with the use of Inconel 82/182 weld materials and stainless steel safe ends in Westinghouse pressurizers has been excellent. However, recognition by the industry of the potential for PWSCC of Inconel 82/182 weld metal and sensitized stainless steel suggests that this issue may be addressed for impact to the pressure boundary of the pressurizer.

3.2.3 Aging Effect Management

Because of the current activities described above, leakage of borated water would be detected, and corrosion would not be established long enough for an aging effect to occur. Since no aging effect results due to corrosion caused by borated water leakage, no aging management program is required.

Potential cracking due to PWSCC of Inconel 82/182 weld metal or SCC of sensitized stainless steel at nozzle safe ends can be managed by an inservice examination (ISE) program. This ISE program will identify cracks and provide criteria to determine if the crack is unacceptable. The ISE program also provides corrective actions for unacceptable cracks. This program is described in detail in Section 4.1.

3.3 IRRADIATION EMBRITTLEMENT

3.3.1 Mechanism Description

The types of radiation relevant to the aging assessment of the pressurizer are neutron and gamma radiation. Materials exposed to neutron radiation undergo changes in microstructure and properties. The extent of the changes depends on the particular material, the neutron flux (n/cm^2-sec), flux spectrum, exposure time or fluence (flux x time, n/cm^2), and temperature. Typically, neutron irradiation produces an increase in strength and decrease in ductility or toughness. With sufficient loss of ductility or toughness, the material becomes embrittled. Degradation due to embrittlement is the principal concern with respect to an aging assessment. The principal effect of gamma irradiation is to deposit energy in the material being irradiated, which increases the temperature of the material (gamma heating).

3.3.2 Aging Effect Evaluation

The neutron and gamma radiation environments to which the pressurizer is exposed are shown in Tables 2-3 and 2-4. Changes in mechanical properties due to neutron fluence (integrated damage) are insignificant since the expected neutron fluence levels for pressurizer components are shown to be negligible and much less than the approximate threshold level of 1×10^{-20} n/cm^2 (E>.1 MeV), where neutron irradiation embrittlement may occur. Furthermore, since the fluence level is less than 1×10^{-17} for the design life, no surveillance program is required as is the case for the reactor vessel beltline region. Similarly, gamma radiation levels, even the extreme levels, to which the pressurizer might possibly be exposed will not produce a perceptible change in temperature of the pressurizer materials. Thus, degradation due to neutron and gamma radiation is negligible with respect to the pressurizer function and need not be considered further in the aging assessment.

3.3.3 Aging Effect Management

Due to the lack of a detrimental aging effect caused by irradiation embrittlement, there is no need for management of this aging effect during an extended period of operation.

3.4 THERMAL AGING

3.4.1 Mechanism Description

Thermal aging refers to gradual and progressive changes in the microstructure and properties of a material due to exposure at an elevated temperature for an extended period of time [Ref. 14]. There are many forms of thermal aging, and the changes that occur may be desirable or undesirable. The only form of thermal aging that degrades pressurizer materials is the embrittlement of duplex ferritic-austenitic stainless steel castings. Other pressurizer materials, both ferritic and austenitic alloys, are microstructurally stable with respect to thermal aging degradation at the operating temperature of the pressurizer. The microstructure of duplex austenitic stainless steel consists of a ferritic phase imbedded in an austenitic matrix. During thermal aging, complex precipitation reactions and phase changes occur in the ferritic phase, which lead to embrittlement of the ferrite. With a sufficient amount of ferrite in the alloy (typically, 15 percent or more), a network of ferrite-phase embrittlement may be formed that causes a toughness reduction for the entire component or part.

3.4.2 Aging Effect Evaluation

The effects of thermal aging are not significant for any pressurizer subcomponent except for the spray head, since the materials of construction are microstructurally stable at PWR operating temperatures. The spray head is made of duplex ferritic-austenitic stainless steel and is therefore susceptible to thermal aging embrittlement. The spray head is a relatively low stressed subcomponent and service experience has been satisfactory. Thermal aging embrittlement of the pressurizer spray head has no significant effect on the function of the pressurizer nor the design function of the head itself. Therefore, the effects of thermal aging embrittlement need not be evaluated further. It is noted that the spray head is accessible for maintenance and can be replaced should future experience warrant.

3.4.3 Aging Effect Management

Due to the lack of a detrimental aging effect caused by thermal aging, there is no need for management of this aging effect during an extended period of operation.

3.5 EROSION AND EROSION/CORROSION

3.5.1 Mechanism Description

Erosion is a mechanical action of a fluid and/or particulate matter on a metal surface, without the influence of corrosion. Equipment exposed to moving fluids are vulnerable to erosion. These include piping, valves, propellers, vanes, impellers, etc. General erosion occurs under

high velocity conditions, turbulence, and impingement. Geometric factors are extremely important. Erosion/corrosion occurs when the fluid or particulate is also corrosive. Carbon and low alloy steels are most susceptible to erosion/corrosion. Higher alloy steels, nickel-based alloys, and stainless steels are considered resistant to both erosion and erosion/corrosion in a PWR environment. Of the two mechanisms, only erosion has a potential impact to the pressurizer.

3.5.2 Aging Effect Evaluation

All of the pressurizer subcomponents being considered here are constructed of austenitic stainless steels that are resistant to erosion in a PWR environment. The loss of material from erosion due to the flow of fluid in the pressurizer has a low probability of occurring based on the following:

- There is relatively low fluid flow velocity in the pressurizer components
- Water is filtered prior to injection into the primary system, minimizing erosion due to particles in the fluid

Several of the pressurizer components exposed to fluid flows that have the potential to cause erosion are as follows:

- Surge nozzle thermal sleeve
- Spray nozzle thermal sleeve
- Surge nozzle retaining basket
- Spray head
- Spray head coupling
- Surge nozzle safe end
- Spray nozzle safe end

Only one component, the spray head, is considered to have flow conditions that have the potential for erosion. The internal pressurizer spray head is designed to produce a full cone spray across the inside diameter of the pressurizer. Stationary vanes within the cast stainless steel housing determine the shape of the spray. These vanes are subject to erosion by the spray flow over the life of the pressurizer that could result in changes to the spray geometry and contour of the spray pattern. Should changes in the spray geometry impact the pressurizer's operating characteristics during plant operation, the spray head can be replaced. Since the spray head does not comprise the pressure boundary, any degradation will not compromise the intended function of the pressurizer. Failure of the spray head would not prohibit spray water entrance to the pressurizer to control primary system pressure. Therefore, the effects from erosion are not considered to be significant for the pressurizer and its subcomponents.

3.5.3 Aging Effect Management

Due to the lack of a detrimental aging effect caused by erosion and erosion/corrosion, there is no need for management of this aging effect during an extended period of operation.

3.6 WEAR

3.6.1 Mechanism Description

Mechanical wear is defined as damage to a solid surface caused by the removal or plastic displacement of material by way of a mechanical contact characterized by the loss of material during relative motion or sliding.

3.6.2 Aging Effect Evaluation

In general, the pressurizer is not susceptible to wear due to lack of relative motion. However, due to differential thermal expansion between the pressurizer shell and the heaters, some mechanical wear is possible at the heater well to the support plate interface. Mechanical wear could result in the thinning of the sheath wall and subsequent electrical failure. If this occurs, the heater may be replaced. Since there is a redundant pressure boundary at the heater connection (see Subsection 2.3.2), failure of the sheath would not affect the ability of the pressurizer to maintain the integrity of the pressurizer reactor coolant boundary.

3.6.3 Aging Effect Management

Due to the lack of a detrimental aging effect caused by wear, there is no need for management of this aging effect during an extended period of operation.

3.7 CREEP AND STRESS RELAXATION

3.7.1 Mechanism Description

Creep is the plastic deformation that occurs over a period of time in a material subjected to a stress that is typically below the elastic limit. Creep occurs at elevated temperatures where continuous deformation takes place under constant strain. Creep is not a concern for austenitic alloys below 1000°F and low alloy steels below 800°F.

Stress relaxation is similar to creep, but it occurs under conditions of constant strain where part of the elastic strain is replaced with plastic strain. The unloading of pre-loaded components due to stress relaxation is caused by long-term exposure of materials to elevated temperatures and/or neutron irradiation. A material loaded to an initial stress may experience a reduction in stress over a period of time at high temperatures. At temperatures well above operating temperatures, their thermal effect for stress relaxation is predominant. It has been determined, however, that the presence of fast neutron irradiation can result in stress relaxation even at normal operating temperatures. When the irradiation effect is dominant, the rate of neutron impingement controls the number of vacancies formed in the component material. The presence of vacancies increases the likelihood that the material will plastically deform, resulting in the relaxation effect. Stress relaxation is particularly important in the design of bolted connections that depend on preload for maintenance of function and structural integrity.

3.7.2 Aging Effect Evaluation

The maximum temperature experienced by pressurizer subcomponents during normal and upset conditions is approximately 680°F. This temperature is well below the temperature of 1000°F, at which creep is a concern for any of the austenitic stainless steel and 800°F for low alloy steel pressurizer subcomponents. Therefore, the effect from creep is not significant for any pressurizer subcomponent.

The only pressurizer pressure boundary component that could be affected by stress relaxation is the manway bolted closure. Prestress in the bolts (or studs) can relax at sufficiently high temperatures. Neutron irradiation will not lead to stress relaxation of preloaded bolted closures due to the relatively low fluence levels.

The factors affecting the rate of stress relaxation are the material type, time, temperature, and degree of initial prestress. The loss of prestress occurs at a decreasing rate; the majority of the loss is within the first year. The amount of prestress loss significantly decreases with time to approach an asymptotic value. Therefore, the level of prestress with extended operation should be comparable to that at 40 years.

Loss of preload through stress relaxation could lead to associated damage in one or two ways. First, excessive loss of preload or even excessive variability of preload could cause leakage through the bolted closure. Second, if the excessive loss of preload is permitted to continue uncorrected, there is a potential for cyclic loads to be imposed on the bolting that could increase fatigue usage. Such cyclic loading amplitudes would have to be large, or of long duration, so that relative motion of the mating surfaces would lead to detectable leakage. As a result, fatigue damage estimates for bolting are dominated by the joint makeup/ detorquing cycle, and not by fluctuating cycles superimposed on the preload stresses. Therefore, the aging effect under consideration here is leakage through the bolted closure caused by excessive loss of preload.

While the relaxation of bolting preloads for the pressurizer manway closure can occur, the magnitude of the preload is intended to compensate for some loss. Operating history supports the premise that relaxation is not an issue to be addressed in the pressurizer aging management program. The issue of manway leakage was discussed in Subsection 2.6.5.

3.7.3 Aging Effect Management

Due to the lack of a detrimental aging effect caused by creep and stress relaxation, there is no need for management of this aging effect during an extended period of operation.

3.8 TIME-LIMITED AGING ANALYSES EVALUATION

Section 2.5 identified fatigue as the only time-limited aging analysis (TLAA) related to the pressurizer. It also discusses affected subcomponents based on the projection of representative design fatigue usage factors for pressurizer subcomponents presented in Table 2-10. Related effects of fatigue for various subcomponents is discussed in Section 3.1.

For most, if not all, subcomponents listed in Section 2.5 that require further evaluation or management to address fatigue, it is expected that re-evaluation will result in justification of continued operation for the extended period. Options for re-evaluation and/or management of fatigue for the pressurizer are discussed in Section 4.0. To reasonably address the feasibility of the options, this section provides general background on the existing conservatisms in the pressurizer representative design fatigue usage factors presented in Table 2-10. Any re-evaluation of fatigue should consider removal of these conservatisms.

To address the impact of additional transient cycles for the license renewal period on the pressurizer intended function, fatigue-sensitive subcomponents may be re-evaluated. The pressurizer design fatigue evaluations, discussed in Subsection 2.4.5, were performed according to the ASME Code. In re-evaluating fatigue to include the license renewal period, the same general methods may be used, but significantly excessive conservatisms in the method applications may be eliminated. These conservatisms are discussed in Subsections 3.8.1 to 3.8.3.

These sections show that there is a substantial amount of conservatism built into the pressurizer subcomponents' stress analysis and fatigue calculations. Therefore, it is expected that existing stress reports can be updated to reduce conservatisms and to calculate acceptable fatigue usage for the pressurizer subcomponents for the license renewal period.

The evaluation and/or management of fatigue should also incorporate results of the WOG program on Pressurizer Insurge and Outsurge Transients, introduced in Subsection 2.6.1. Further discussion with respect to fatigue evaluation and management is included in Subsection 3.8.4.

3.8.1 Conservatisms in the Design Transients

The conservatisms built into the design transients are considerably more severe than those experienced during service so that they would bound the expected number during plant lifetime. The design transients for the pressurizer are defined in the component design specification. Transients are presented in the form of idealized time histories, with the idealization being linear ramps and step changes. The main source of conservatism in temperature transients is step changes. "Real" transients seldom exhibit step changes, though step changes may be approached when cold water is injected into a hot nozzle and later turned off. Also, the number of transient occurrences specified could be much larger than the realistic number. For example, the unit loading and unloading between 15 to 100 percent transient has 13,200 to 18,600 postulated design cycles, depending on the plant. This means that a plant will be cycled through these loading and unloading cycles once every day for 40 years. This is not a realistic mode of operation.

One way to address excess conservatisms in design transients is transient monitoring and cycle counting. Actual design transient cycles may be assessed using pertinent recorded plant data. Additional conservatisms may be identified by monitoring actual time history records for plant parameters associated with pressurizer transients and by addressing the differences in overall

temperature changes and rate changes associated with a given design transient. Applications of transient monitoring programs are addressed in Section 4.0.

3.8.2 Conservatisms in the Analysis

Conservatisms in the analysis are due to the practice of performing bounding analysis. If it could be shown that the calculated design fatigue usage was less than 1.0 by performing a simplified bounding analysis, it was not necessary to perform additional analysis to show that the ASME Code, Section III fatigue analysis requirements could be met by a larger margin. The following paragraphs discuss the conservatisms built into the pressurizer fatigue analysis.

The two basic types of analyses performed are heat transfer and stress analyses.

The purpose of the heat transfer analysis is to calculate the temperature distribution throughout the component at critical times during transients. Conservatism occurs in the choice of boundary conditions for the heat transfer analysis. Boundary conditions are heat transfer coefficients and temperatures that are imposed on surfaces of the component. Heat transfer coefficients used in component evaluations are chosen with conservatively high values to bound the actual heat transfer coefficients that will occur.

The purpose of the component stress reports is to verify that the component has a cumulative fatigue usage factor of # 1.0. This sometimes leads to conservative "groupings" of design transients. Many times, for example, the worst temperature parameters from one transient are combined with the worst pressure parameters from another transient, resulting in artificially high stress ranges. Also, the transient grouping itself leads to conservatively high fatigue usage calculations.

3.8.3 Design Calculation Updates

For some plants, additional operating transients have been imposed on pressurizer subcomponents after the pressurizer has been in operation for some time, and design fatigue has been re-evaluated. These transients are classified into the following two categories:

- Off-Normal Transients

  These transients are recorded during operation of the plant and are not bounded by any of the design transients. They are random in nature and generally are not predicted to occur again or have few cycles predicted. These have been evaluated on a case-by-case basis for plants where they have been discovered by comparing against Technical Specification heatup and cooldown limits.

- Additional Transients

  Earlier plants (designed in the 1960s and 1970s) have fewer transients defined. Newer plants (designed in the 1980s) have many more transients defined. Many of the earlier plants have chosen to impose some of the additional transients based on information

available for newer plants. A particular example is cold overpressure mitigation system (COMS) transients.

To evaluate these off-normal and additional transients, it was not always possible to recreate the original finite element model, or it may not have been economically feasible to redo the complete analysis. Therefore, heat transfer and stress analyses are performed using conservative bounding formulas.

3.8.4 Insurge and Outsurge Transients

In Subsection 2.6.1, an industry issue was raised with respect to revised thermal transient loadings in the pressurizer. It was postulated in the design basis analysis that surge line flows resulted only from operation of the pressurizer spray line. Further, in the design analysis, it was determined that spray actuation resulted only in an outsurge, i.e., flow from the pressurizer into the surge line and eventually to the RCS hot leg. This approach resulted in relatively minor thermal transient loadings on the lower head and surge nozzle. Table 2-10 indicates the fatigue damage assessment.

Plant operating experience has identified that significant thermal transients are occurring in the pressurizer surge nozzle and lower head region, as detected by plant temperature sensors. These thermal transient loadings will require evaluation for fatigue and fracture resistance. Once the issue became apparent, a number of plants reported similar events and it was clear that a potential generic issue existed. A WOG program, "Pressurizer Insurge and Outsurge Transients Program," MUHP-5060/5061/5062, was initiated in 1991 and is scheduled for completion in the second quarter of 1997. The results and recommendations of the program will provide tools to successfully manage the effects of these phenomena on fatigue in the pressurizer.

The primary aging process on the nozzle and lower head is fatigue, caused by thermal transients that result from insurges and outsurges (i.e., flow between the hot leg and the pressurizer through the surge line). The magnitude of the transient is proportional to the temperature difference between the hot leg and the pressurizer. During normal full power operation, this temperature difference is less that 60°F and is not a significant fatigue concern. However, during plant heatup and cooldown, the temperature difference can be greater than 300°F, which could result in significant fatigue even for a limited number of cycles. The severity of this issue is compounded by the fact that the thermal load is typically applied at a fast rate (approaching a step change), which causes higher thermal stress than gradual temperature changes.

In general, a pressurizer insurge occurs due to an increase in the RCS volume. The RCS volume can increase due to normal thermal expansion associated with heatup, but the resulting surge flow rates are low and the temperature transients are not usually severe. This can typically be offset by operating the pressurizer heaters, which causes spray actuation and an outsurge corresponding to the spray rate. More significant volume changes result from the operation of the chemical volume and control system (CVCS). In the CVCS, the charging line is used to add volume to the RCS and the letdown line is used to remove volume. There is

usually a constant flow in both lines, which maintains a constant level in the pressurizer. By increasing the charging or decreasing the letdown flow, an insurge may result. The rate of the insurge is related to the magnitude of the mismatch. The inverse of these operations will result in an outsurge. Although pressurizer spray operation is the most common cause of surge flows, plant monitoring has indicated that charging/letdown flow mismatches can cause a significant amount of transient activity in the surge nozzle region.

The additional thermal transient loadings on the surge nozzle and lower head region will require a revision to the current design fatigue analysis and will potentially result in larger cumulative usage factors at end of design life. The WOG program is addressing this concern using the following general approach:

1. Develop operational strategies to minimize thermal transient loadings

2. Institute a plant monitoring program to identify the effectiveness of the operational strategies by analyzing the cause and effect of monitored transients (1994 through 1996)

3. Develop revised design transient loadings for new operational strategies

4. Assess fatigue impact of revised transient loadings

Although it is known that some additional fatigue will result from the revised transient loadings, it will not be possible to quantify the effect until the above tasks 3 and 4 have been completed.

3.9 AGING EFFECT EVALUATION SUMMARY

Section 3.0 describes plausible age-related degradation mechanisms and determines the potential significance of their effects on pressurizer component safety function. A summary of the results is presented in Table 3-2. Most of these effects were found to have little or no impact on the pressurizer intended function of maintaining the integrity of the reactor coolant pressure boundary. As discussed in the previous subsections, the only degradation effects that are potentially significant to pressurizer subcomponents during an extended period of operation are:

- Fatigue of the upper portion of the pressurizer shell, the spray nozzle, the manway bolts, the seismic support lugs, the lower head (due to insurge/outsurge transients), the heater wells (due to insurge/outsurge transients), the surge nozzle, and the support skirt and flange

- SCC of potentially sensitized stainless steel safe ends and stainless steel weld metal

- PWSCC of Inconel 82/182 weld metal in the pressurizer safety, relief, spray, and surge nozzles

TABLE 3-2
AGING EFFECT EVALUATION SUMMARY

Potential Age-Related Degradation Mechanisms	Aging Effects	Cause	Affected Subcomponents	Management Program
Fatigue	Damage at microscopic levels, cracking	Repeated cyclic loading	Shell, manway bolts, seismic support lugs	AMP-2.2
			Spray nozzle & safe end, support skirt and flange, lower head, heater well, surge nozzle & safe end	AMP-2.3
Corrosion	Wall thinning, roughened surface, cracking	Electrochemical reaction, boric acid leakage	None	No aging management options needed.
SCC/PWSCC	Localized Cracking Failure	Sustained tensile stress, high strength materials, aggressive environment	Sensitized stainless steel nozzle safe ends; Inconel 82/182 weld metals	AMP-2.1
Irradiation Embrittlement	Embrittlement of ferritic steels, decrease in fracture toughness and ductility	Radiation environment and temperature conditions	None	No detrimental aging effect.
			Low radiation levels	No aging management options needed.

TABLE 3-2 (Continued)
AGING EFFECT EVALUATION SUMMARY

Potential Age-Related Degradation Mechanisms	Aging Effects	Cause	Affected Subcomponents	Management Program
Thermal Aging Embrittlement	Decreased material toughness	Sustained elevated temperature	No pressure boundary subcomponents with materials subject to thermal aging	No detrimental aging effect. No aging management options needed.
Erosion	Wall thinning, loss of material	High velocity fluid	No pressure boundary subcomponents with materials subject to erosion	No detrimental aging effect. No aging management options needed.
Mechanical Wear	Damage to solid surfaces subjected to relative motion	High frequency relative motion, material not wear-resistant	No primary pressure boundary subcomponents with materials subject to wear	No detrimental aging effect. No aging management options needed.
Creep and Stress Relaxation	Continuous physical deformation with time Reduction in stress with time under a given constant strain	Temperature and melting point of metal	None Temperature 680°F well below the 1000°F limit of concern	No detrimental aging effect. No aging management options needed.

3.9.1 Fatigue

Section 3.1 identifies a number of pressurizer subcomponents for which fatigue is an issue requiring further evaluation or management. This may be due to the following reasons:

- Current design fatigue usage extrapolation would conclude that the pressurizer intended function could not be assured for the license renewal period, because excessive conservatisms exist in the design basis analyses. Additional analysis and less conservative assumptions are expected to show acceptability for the license renewal period.

- Pressurizer insurge and outsurge transients need to be addressed since they affect the inputs and assumptions for the fatigue evaluation of subcomponents in the pressurizer lower head region. This issue may be addressed by both analysis and management of operations. It applies to the lower head, lower head heater well, surge nozzle, and surge nozzle safe end.

Therefore, potential degradation of the pressurizer intended function caused by fatigue may be addressed by both reanalysis and fatigue management. Guidelines for the management of pressurizer fatigue are provided in Section 4.2.

3.9.2 SCC and PWSCC

Subsection 2.6.2 discusses the effects of potential SCC/PWSCC in nozzle safe ends. Although service experience with these nozzles in Westinghouse pressurizers has been excellent, industry concern for this issue warrants continued management during the license renewal period. Management of this effect for the pressurizer under current industry programs is discussed in Section 4.1.

4.0 AGING MANAGEMENT ACTIVITIES AND PROGRAM ATTRIBUTES

This section provides options to manage aging effects during an extended period of operation. Since this report is generically applicable, only program attributes are given. Plant-specific details will be developed during the preparation of license renewal applications. The plant-specific programs developed by utilities will demonstrate that aging effects are managed. Therefore, pressurizer intended function will be maintained during an extended period of operation.

Section 3.0 identifies the effects of fatigue, SCC, and PWSCC as potentially significant for at least some pressurizer components. Section 4.1 describes the attributes of current industry programs that manage the effects of SCC for potentially sensitized stainless steel nozzle safe ends and stainless steel weld metal, and that manage the effects of PWSCC for Alloy 82/182 weld metal in the pressurizer safety, relief, spray, and surge nozzles. Section 4.2 describes additional activities and their associated attributes that are intended to manage the potentially significant effects of fatigue for the remaining pressurizer subcomponents through the license renewal term.

Details and implementation guidance are provided. Alternatives to the attributes provided in this section will require descriptions and justifications in the plant-specific License Renewal applications. Aging management attributes are summarized by aging management program (AMP) tables (see Table 4-1). These tables summarize program attributes and activities that will form the basis for programs implemented by utilities during an extended period of operation.

TABLE 4-1
AGING MANAGEMENT PROGRAM ATTRIBUTES

Attribute	Description
Scope	Structures, components, or subcomponents and applicable aging effects.
Surveillance Techniques	Monitoring, inspection, and testing techniques used to detect effects.
Frequency	Time period between program performance or when a one-time inspection must be completed. Programs for event-driven effects should perform periodic inspections for the event. Inspection for the effect will take place when an event has occurred.
Acceptance Criteria	Qualitative or quantitative criteria that determine when corrective actions are required.
Corrective Actions	Actions to prevent or correct consequences of the effect. Corrective actions should include evaluation of failures to determine where similar effects may occur and actions, if practical, to mitigate or eliminate the effect from occurring.
Confirmation	Post-maintenance test or other techniques to confirm that the actions have been completed and are effective.

4.1 CURRENT ACTIVITIES AND PROGRAM ATTRIBUTES

The potentially significant effects of SCC and PWSCC on most Westinghouse pressurizer subcomponents are managed by current industry programs described in this section.

The effects of SCC on potentially sensitized stainless steel safe ends and stainless steel weld metal, and PWSCC of Alloy 82/182 weld metal in the pressurizer safety, relief, spray, and surge nozzles have been discussed in Subsections 2.6.2 and 3.2.2. Though service experience with nozzles and safe ends in Westinghouse pressurizers has been excellent, industry concern for this issue warrants continued verification that, should SCC of any of these stainless steel nozzle safe ends connections, or PWSCC of the Alloy 82/182 weld metal for any of these safety, relief, spray, or surge nozzles, develop in the future, such occurrences would not create a safety issue and could be managed so as not to compromise the pressurizer intended function.

Acceptable options to verify that the pressurizer can continue to perform its intended function during the license renewal period may include the following:

- Following industry experience with pressurizer penetrations, ongoing laboratory studies of PWSCC of Inconel 82/182 weld metals, and ongoing developments of alternate weld consumables such as Inconel 52/152.

- Inclusion of the nozzle-to-safe-end weld and the adjacent HAZ/base metal in the plant ISE program, in accordance with the ASME Code, Section XI, Subsection IWB. Examination Category B-F in Table IWB-2500-1 calls for the volumetric and surface examination of all dissimilar metal nozzle-to-safe-end butt welds for pressurizer nozzles with connected piping greater than or equal to 4 inches in diameter, and surface examination of all dissimilar metal nozzle-to-safe-end butt welds for pressurizer nozzles with connected piping less than 4 inches in diameter. The volume or surface to be examined includes the weld and 1.5 inches on either side of the weld, a coverage that incorporates the weld metal, the HAZ, and any affected base metal adjacent to the weld. Indications that are detected and sized by the examinations are compared to the flaw acceptance standards given in IWB-3514. The indications are compared to the results of preservice examination to identify any indications, such as cracking caused by SCC or PWSCC, from operating service. The component is acceptable for continued service if no indications are found that exceed the acceptance standards. Supplemental examinations, engineering evaluations, and repair or replacement are options when the indications exceed the acceptance standards.

Should a utility wish to include a specific aging management program for SCC/PWSCC, an example of program attributes based on the current industry ASME Section XI programs is shown in Table 4-2.

TABLE 4-2
AGING MANAGEMENT ACTIVITIES AND PROGRAM ATTRIBUTES FOR PRESSURIZER SCC/PWSCC (AMP-2.1)

Attribute	Description
Scope	Nozzle safe ends of stainless steel with PWHT and nozzle safe end welds of Inconel 82/182 weld metal
Surveillance Technique	ASME, Section XI In-Service-Inspection per Table IWB-2500-1, Examination Category B-F
Frequency	As defined by ASME, Section XI, IWB-2400
Acceptance Criteria	As defined by ASME, Section XI, IWB-3500 and 3600
Corrective Actions	Follow industry experience with pressurizer penetrations and on-going laboratory studies of Inconel 82/182 weld metals and alternate weld consumables
Confirmation	Acceptance criteria met or For repair, ASME Section XI IWA-4600 & 4700

The postulated mode of degradation of nozzle safe ends from SCC/PWSCC involves both initiation and propagation stages that could develop progressively over a number of inspection periods. Accordingly, the proposed aging management program would provide evidence of early stages of SCC/PWSCC initiation and propagation with sufficient time to implement remedial actions. Therefore, the inservice inspection programs of Section XI are a reasonable way to keep track of this potential issue. Section XI inspections are required periodically, and are not tied to a specific design life and are therefore effective throughout the license renewal period. The Section XI examination methods and frequencies are acceptable to detect flaws that can be analytically evaluated or repaired prior to the loss of intended function.

In the case where repair is warranted, confirmation that the intended function is restored is provided by preservice examination and testing according to IWA-4600 & 4700.

4.2 ADDITIONAL ACTIVITIES AND PROGRAM ATTRIBUTES

The aging effects of fatigue require additional activities and attributes for an extended period of operation. Options for program activities and attributes that manage the effects of fatigue are provided in this section.

Fatigue may affect several of the pressurizer subcomponents. As discussed in Subsection 3.9.1, this issue arises for two reasons:

- The simplified and conservative fatigue analysis methodology adopted that encompasses all pressurizers and fatigue loadings under one umbrella for

demonstrating compliance with the ASME Code fatigue usage limit for the initial 40-year design objective

- Additional fatigue to be considered due to the pressurizer insurge/outsurge transients

Aging management program attributes for fatigue are shown in Tables 4-3 and 4-4. They are described in terms of the subcomponents that are expected to be managed by re-evaluation alone, and subcomponents affected by potentially significant transients, which may also require fatigue management through operational changes. Table 4-3 applies to subcomponents for which it is expected that the adequacy of the fatigue design basis can be shown through the license renewal term. This would be accomplished by removing excess conservatism from the design fatigue analyses, so that the resulting usage would show the subcomponent to not be fatigue-sensitive. Table 4-4 applies to subcomponents that require some degree of transient cycle counting for use in fatigue re-evaluation or management during the license renewal term.

Successful implementation of the program summarized in Table 4-3 will adequately manage fatigue for the applicable subcomponents by demonstrating that these locations are not fatigue-sensitive for the CLB or for the license renewal period. This will be demonstrated by removing the excess conservatisms and showing acceptable fatigue usage that includes adequate margin to account for the license renewal period. Through this evaluation, it will be shown that the affected subcomponents will continue to maintain the pressurizer intended function throughout the license renewal period.

TABLE 4-3
AGING MANAGEMENT ACTIVITIES AND PROGRAM ATTRIBUTES FOR PRESSURIZER FATIGUE: ANALYSIS (AMP-2.2)

Attribute	Description
Scope	Shell, manway bolts, seismic support lugs
Surveillance Technique	Not applicable
Frequency	One-time fatigue evaluation for components showing acceptable usage for the license renewal period
Acceptance Criteria	Acceptable cumulative usage factor (or equivalent) for plant life, including the license renewal period
Corrective Actions	Recalculate fatigue usage, removing excess conservatism from CLB analyses
Confirmation	Acceptance criteria met

TABLE 4-4
AGING MANAGEMENT ACTIVITIES AND PROGRAM ATTRIBUTES FOR PRESSURIZER FATIGUE (AMP-2.3)

Attribute	Description
Scope	Spray nozzle and safe end, support skirt and flange, lower head, heater well, surge nozzle and safe end
Surveillance Technique	Not applicable
Frequency	1. One-time transient comparison or fatigue evaluation for components showing acceptable usage for the license renewal period OR 2. Ongoing transient cycle monitoring for components requiring fatigue usage calculation for actual plant transients comparison
Acceptance Criteria	Acceptable cumulative usage factor (or equivalent) for plant life, including the license renewal period

TABLE 4-4 (Continued)
AGING MANAGEMENT ACTIVITIES AND PROGRAM ATTRIBUTES FOR PRESSURIZER FATIGUE (AMP-2.3)

Attribute	Description
Corrective Actions	1. Transient cycle counting and comparison program AND 2. Modified operating procedures: a. Use operating procedures during heatup and cooldown that mitigate insurge/outsurge transients in lower head and surge nozzle (WOG program MUHP-5060/5061 guidelines) b. Modify operating procedures for components predicted by the transient cycle counting or fatigue usage monitoring program to be accumulating high fatigue. OR 3. Recalculate fatigue usage for the license renewal period where required based on transient cycle comparison OR 4. Where required by fatigue prediction or where economically justified, institute repair or replacement program (ASME Section XI, IWA-4000, or IWA-7000)
Confirmation	Acceptance criteria met or For repair, ASME Section XI, IWA-4600 & IWA-4700.

The most effective aging management options for fatigue will be dependent on the final NRC position on fatigue in license renewal. From this standpoint, the attributes of a fatigue aging management program are presented based on a number of options. One alternative providing a number of options is the Proposed Industry Position on Fatigue Evaluation for License Renewal, which is currently being developed. This alternative provides a broad-based, general approach to fatigue management to which the specifics of the pressurizer may be applied and that should address the concerns of GSI-166 as noted in the FAP [Ref. 11]. Figure 4-1 shows the overall flowchart presented by the current position. Using the flowchart as a basis, the following paragraphs describe the characteristics of a general application of the proposed position to the pressurizer.

The objective of the fatigue management program is to maintain the CLB for fatigue for the current and license renewal terms. For the pressurizer, the CLB includes:

1. Fatigue design basis: ASME Code Section III, Class 1 explicit fatigue design, in most cases

2. Fatigue operating basis: Cyclic duty commitments (FSAR and Technical Specifications)

   ASME Code Section XI ISE commitments

3. Regulatory oversight process commitments

The Proposed Industry Position (the "Position") essentially introduces a four-step elimination process, applied as follows for the pressurizer:

1. Determine if the current and projected transients for the license renewal term are within the CLB.

   The Position notes to this first step provide for virtually any justifiable manner of comparison to the design basis transients, from simple event-related cycle identification to partial cycle counting or fatigue usage recalculation.

   In this process, it is important that the complete CLB fatigue basis transients are considered for comparison. For the pressurizer, this includes:

   a. Original design transients

   b. Evaluated plant-specific additional and/or off-normal transients

   c. NRCB 88-11 reconstitution of surge line piping load transients

   d. Any future reconstitution resulting from plant-specific application of the WOG program on pressurizer insurge-outsurge transients mitigation (This consideration requires utilities to follow the current industry program to completion.)

   The essential goal of this step is to show that the design basis evaluations encompass the effects of fatigue that will be experienced by the component through the end of the license renewal term. The design basis transients are intended to be a conservative estimate of the number, types, and severity of events that can occur in the plant. However, actual operating transients determine the true fatigue damage in components. Operating experience indicates that when a plant is operated by procedures in accordance with the design basis, the actual events are often fewer in number and less severe than postulated by the design transients. Options for methods to address cyclic adequacy of the design basis range from simple manual cycle counting to reclassification of plant transients and recalculation of fatigue usage.

Examples of transient comparison methods to accomplish this first step are:

- Transient cycles - Based on a period of actual plant operations sufficient to characterize operations during the license renewal period, determine a more representative number of total transient cycles for comparison to that assumed in the design basis fatigue evaluation.

- Transient severity - Based on operating experience for a number of plant heatup/cooldown cycles that are representative of operations anticipated during the license renewal period, determine a more representative loading for controlling transients for comparison to those assumed in the design basis fatigue evaluation.

- Transient fatigue effects - Effects of transients determined to be more representative of actual operations during the license renewal period may be compared based on the stress or partial usage effect produced for the subcomponent. Comparisons of this type should also include consideration of existing conservatisms in the design analysis described in Subsection 3.8.1.

Any of these options may also include incorporation of future transient tracking to further reduce conservatisms in the assessment of fatigue effects in a subcomponent.

Successful implementation of this step will adequately manage the effects of fatigue by demonstrating that the CLB fatigue evaluation is valid for the license renewal period, based on the transient loadings considered. The CLB cumulative usage factor acceptance criterion is designed to preclude fatigue cracking, and therefore will demonstrate that the pressurizer intended function will be maintained throughout the license renewal period.

If step 1 is unsuccessful, i.e., the existing design basis transients cannot be shown to account for the transients postulated to occur for the license renewal term, then a decision must be made to determine the most effective way to manage fatigue for the pressurizer subcomponents. Depending on the results of the comparison made in step 1, the management options chosen for various subcomponents may be different. The Position provides three alternatives, the application of which is discussed below.

2. Determine if the component is or can be included in the existing inservice examination programs, and if existing examination programs manage the effects of fatigue for the license renewal term.

   For the pressurizer, the applicable plant-specific Section XI ISE program would be used. Program attributes for typical Section XI ISE application based on the 1989 Edition of ASME Section XI are summarized in Table 4-5. It should be noted, however, that there are locations in the pressurizer that are inaccessible for ISI, and therefore this would not be a viable option for those locations. Also, any changes to the existing ISE program from future risk-based considerations should be included. (This requires utilities to follow current Section XI activities on risk-based inspections to completion.)

Table IWB-2500-1, Examination Category B-B requires volumetric examination of shell-to-head welds and head welds. Examination Category B-D requires volumetric examination of nozzle-to-vessel welds and nozzle inside radius sections. Examination Category B-F requires volumetric and surface examinations for nozzle-to-safe end dissimilar metal welds for nozzles with connected piping greater than or equal to 4 inches in diameter, and surface examination for nozzle-to-safe end dissimilar metal welds for nozzles with connected piping less than 4 inches in diameter. Indications that are detected and sized by the examinations are compared to the flaw acceptance standards in IWB-3510, IWB-3512, and IWB-3514, respectively. Supplemental examinations, engineering evaluations (IWB-3600), and repair or replacement are options when the indications exceed the acceptance standards. Since manifestation of excessive fatigue damage is expected to be fatigue crack initiation and/or growth, the volumetric examinations and related evaluations will manage the effects of significant fatigue damage.

Table IWB-2500-1, Examination Category B-P requires system leakage and hydrostatic tests for all pressure retaining components, with visual (VT-2) examination. Examination Category B-E requires visual (VT-2) examination for pressurizer heater penetration welds. The VT-2 requirements in IWB-3522 are designed to detect leakage or evidence of leakage. Since manifestation of excessive fatigue damage is expected to be fatigue crack initiation and/or growth, which could ultimately result in a through-wall crack and leakage, the VT-2 examination will detect the effects of significant fatigue damage.

Since the examination methods and related evaluations described above will allow the detection, evaluation, and/or repair of cracks caused by significant fatigue damage, this management option will maintain the pressurizer intended function. These inspections are required periodically and are not tied to a specific design life. Because the transient loading frequencies are not anticipated to significantly increase during the license renewal period, these inspections will remain effective throughout the license renewal period.

TABLE 4-5
AGING MANAGEMENT ACTIVITIES AND PROGRAM ATTRIBUTES FOR PRESSURIZER ISE OPTION FOR FATIGUE MANAGEMENT (AMP-2.4)

Attribute	Description
Scope	Pressurizer subcomponents accessible for ISI, that are not adequately addressed by the CLB for the license renewal term
Surveillance Technique	ASME, Section XI inservice inspection per Table IWB-2500-1, Examination Categories B-P, B-B, B-D, B-E, B-F
Frequency	As defined by ASME, Section XI, IWB-2400
Acceptance Criteria	As defined by ASME, Section XI, IWB-3500 & 3600
Corrective Actions	See fatigue management options in Table 4-5
Confirmation	Acceptance criteria met or For repair, ASME Section XI, IWA-4600 & 4700

If the subcomponent is not or cannot be included in an adequate ISE program, then:

3. Evaluate the component for the license renewal term based on an augmented inservice examination program or recalculate fatigue usage for reconstituted license renewal transients.

   The Position notes that augmented ISE may consider the flaw tolerance approach plus local inspection procedures, as prescribed by the ASME Section XI non-mandatory appendix for evaluation of fatigue in operating plants. This option is subject to final regulatory acceptance of the non-mandatory appendix. The proposed Position also notes that risk-based evaluations may be used to determine frequency and extent of coverage of augmented inspections. (This requires utilities to follow current Section XI activities on risk based inspections and regulatory acceptance of those results, to completion.) Once again, the application of augmented inspection is not an option for locations that are inaccessible for ISI.

   The other alternative of the Position is to recalculate class 1 fatigue usage for license renewal term transients. For the pressurizer, conservatisms in CLB fatigue analyses for the pressurizer that may be removed are described in detail in Subsection 3.9.1 of this report. Based on the design basis results and discussion of conservatisms previously discussed, it is judged that all subcomponents can be shown acceptable based on current ASME Section III class 1 fatigue sensitive. The spray nozzle may also require incorporation of less conservative plant-specific cyclic duty considerations.

   The Position also notes that both flaw tolerance and fatigue usage recalculations should consider appropriate environmental factors on fatigue crack initiation or growth.

   This should be done consistent with the criteria yet to be established by the NRC for license renewal. The final criteria may affect the above judgment concerning acceptability of recalculated fatigue usage for some subcomponents. (This requires utilities to follow current industry activities to completion, and the final NRC position.)

Although industry work on environmental effects in fatigue is ongoing (see Subsection 2.6.4), possible potential impact of the issue on the Westinghouse pressurizer may be assessed using published results of the status of PVRC activities [Ref. 17]. For carbon and low alloy steels, Reference 17 defines a tentative set of criteria where environmental effects on the S-N fatigue life would be expected to be moderate or acceptable, implying that the ASME Code, Section III fatigue design curves are sufficiently conservative to accommodate moderate environmental effects. These bounding limits are reproduced in Table 4-6. They are presented as independent parameters, so that satisfying any single criterion of the set would indicate that environmental effects are acceptable or moderate.

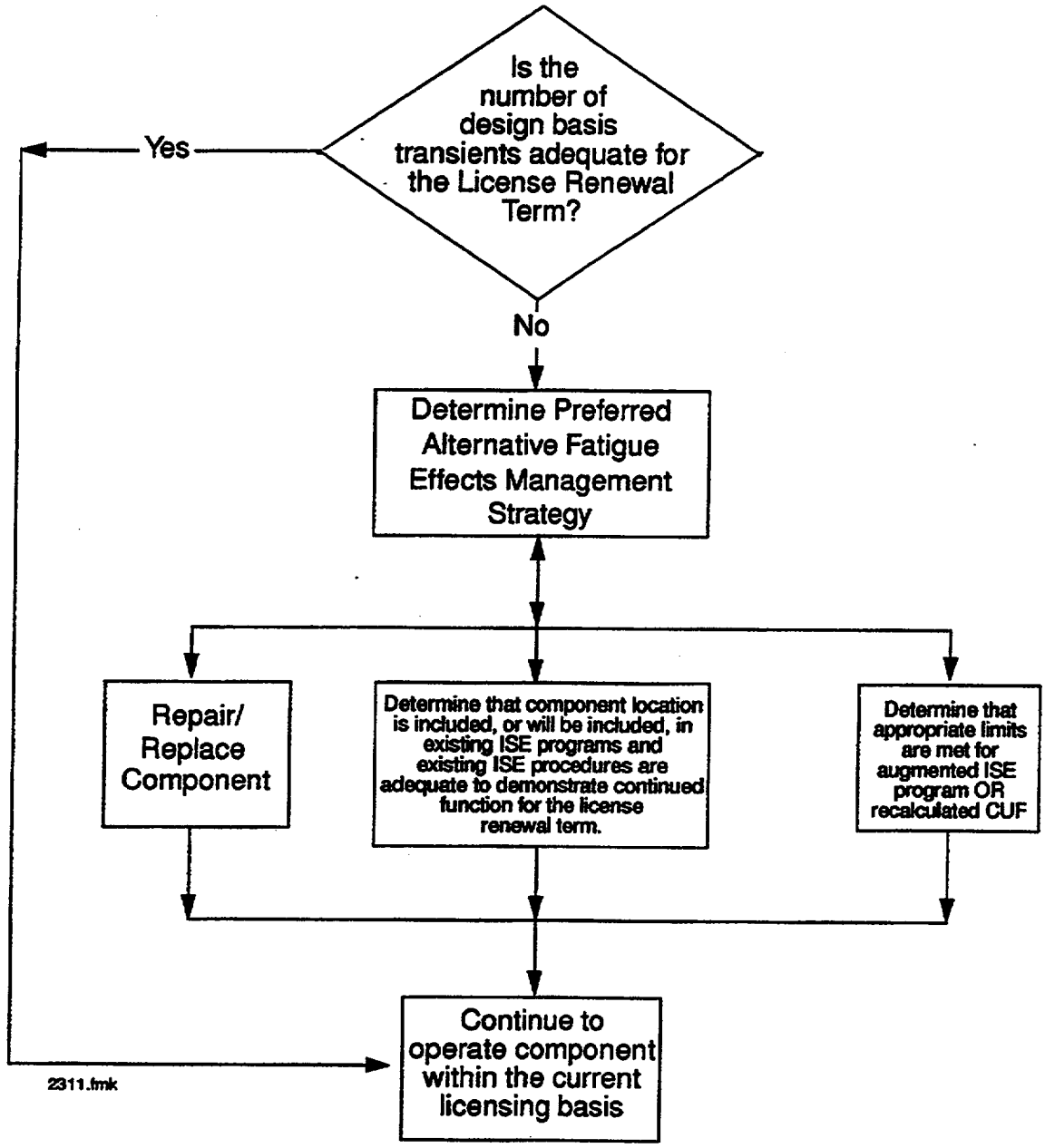

Figure 4-1 **Flowchart Describing Proposed Industry Position on Fatigue Evaluation for License Renewal of Passive Class 1 Component Locations with Explicit Fatigue Design Basis**

TABLE 4-6
PVRC VALUES OF INDEPENDENT PARAMETERS FOR ACCEPTABLE OR MODERATE ENVIRONMENTAL EFFECTS ON THE S-N FATIGUE LIFE OF CARBON AND LOW ALLOY STEELS [Ref. 17]

Strain Amplitude	≤ 0.1%
Strain Rate	≥ 0.1%/sec
Dissolved Oxygen	≤ 0.1 ppm
Temperature	≤ 150°C (302°F)
Sulfur in Steel	≤ 0.003%
Water Flow Velocity	> 3 m/sec (3.3 ft/sec)

The surfaces of the pressurizer that are in contact with the primary coolant are stainless steel or Inconel weld metal. Reference 17 also discusses environmental effects for austenitic steels and nickel alloys, but criteria have not been developed, primarily due to lack of data. It does show data that generally fall above the ASME design curve for these materials subjected to high oxygen contents (0.2 - 8 ppm) and slow strain rates (0.4 - 0.004 percent/sec). In general, the concerns for environmental effects in these materials are apparently not as great as for carbon and low alloy steels. Therefore, if any of the Table 4-6 criteria can be satisfied for the pressurizer materials, it is probable that the environmental effects issue will not be significant.

Some parameters represent conditions that must be addressed plant-specifically. Strain amplitude and strain rate are loading dependent and are not easily addressed quantitatively in the context of this report. However, most actual plant transients would typically result in strain rates and amplitudes within the stated limits. The sulfur content of the stainless steel or Inconel weld metal pressurizer materials may be within the criterion, but is dependent on the material specifications.

Other parameters represent conditions that may be addressed generally. Dissolved oxygen criteria in Westinghouse PWR primary coolant follow the EPRI Primary Water Chemistry Guidelines [Ref. 18]. These guidelines recommend actions to maintain dissolved oxygen to 5 ppb within a 7-day period and to 100 ppb within a 24-hour period during power operation. They also include limits of less than 100 ppb prior to exceeding 250°F, or prior to criticality. Therefore, it is reasonable to conclude that the PVRC dissolved oxygen criterion would be satisfied for Westinghouse pressurizers.

Based on the general status published by PVRC and the expected PWR water chemistry, it does not appear that environmental effects in fatigue will be a significant issue for the pressurizer. As discussed in Subsection 2.6.4, it is necessary for utilities to follow industry and regulatory activities in this area to address the specific parameters for the pressurizer.

If step 3 is not successful, then:

4. Repair or replace the component.

Another option to manage fatigue is repair or replacement. For some components the most appealing option to manage fatigue may be to replace the component, e.g., manway bolts.

ASME, Section XI, Subsection IWA-4000 provides repair procedures for flaws that are unacceptable according to the acceptance standards or analytical evaluation. These procedures include removal of the flaw, weld procedures, and post-weld heat treatment, if applicable. These repair procedures restore the subcomponent so that the intended function is maintained. This state is confirmed by preservice examination and testing as prescribed by IWA-4600 and IWA-4700.

ASME, Section XI, Subsection IWA-700 provides requirements for replacement of subcomponents that are unacceptable according to acceptance standards or analytical evaluation. These include requirements for the replacement program, Code applicability, construction, installation, and preservice inspection. These requirements provide confirmation that the intended function is restored, and continuing assurance can be maintained using the fatigue management program summarized above.

For the pressurizer, it is expected that most, if not all, of the fatigue management issues will be adequately addressed using options consistent with step 1 of the Proposed Industry Position. With respect to analysis, fatigue reanalysis based on the CLB is expected to result in acceptable fatigue usage for the following pressurizer subcomponents for an extended period of operation:

- Shell
- Spray nozzle and safe end
- Manway bolts
- Seismic support lugs
- Support skirt and flange
- Lower head (with appropriate resolution of insurge/outsurge)
- Heater well (with appropriate resolution of insurge/outsurge)
- Surge nozzle (with appropriate resolution of insurge/outsurge)

However, this re-analysis must still be done to support license renewal. While some aspects of the re-analysis may be generic, the plant-specific application can vary based on plant age and applicable design and historical loadings.

With respect to the pressurizer insurge/outsurge transients issue, the WOG program on pressurizer insurge and outsurge transients, MUHP-5060/5061/5062, is already in place (see Subsection 2.6.1) to address effective management of this issue. The operating guidelines and analysis recommendations of the WOG program should be implemented to address the impact of this issue on the fatigue analysis of the lower head, heater well, surge nozzle, and surge nozzle safe end.

At the completion of the pressurizer insurge/outsurge WOG program, it will be possible to accurately assess the effect of this aging process on the pressurizer for the CLB. Utilities may evaluate the impact of this issue for license renewal in the same manner as for the CLB, using transients reconstituted by the WOG program, as follows:

- Perform a historical data review to determine past transient loadings related to this issue. The WOG program will provide guidelines for this review.

- Perform a fatigue evaluation for the critical pressurizer subcomponents using historical transients, future design transients, and thermal stress models. Future design transients and thermal stress models will be provided by the WOG program.

The WOG program also provides utilities with a means to manage the issue in the future. Operational strategies have been developed to reduce the possibility of an insurge during plant heatup and cooldown. For example, a continuous outsurge can be maintained during plant heatup as long as the heaters are on, resulting in a continuous spray flow.

Fatigue management of pressurizer transients and related analyses for the license renewal period should include establishment of an efficient data collection system for transient cycle counting and component fatigue management. Plant transient data can be used to account for actual versus design transient cycles and severity for use in transient comparisons or reanalysis. In general, acceptable fatigue management programs provide the information necessary to control plant operating and maintenance practices so that critical fatigue degradation is minimized. Examples of this information are:

- Determination of actual loads experienced by the component
- Comparison of actual loads to design assumptions
- Assessment of current structural integrity
- Estimation of future loading
- Assessment of future structural integrity
- Determination to replace, repair, or continue using the component

All records generated by preventive or corrective actions and inspections shall be maintained in accordance with plant-specific administrative procedures.

Methods of accounting for transient cycles may vary based on the relative contributions of postulated transients to the actual fatigue accumulation. The extent to which records should be kept for a given transient may be determined by the relative contributions of design transients to fatigue predicted in the fatigue-sensitive subcomponents, and the expected contributions due to transient severity and cyclic activity during actual operation. Development of an effective transient cycle tracking program requires knowledge of the design basis for fatigue-sensitive subcomponents and related plant operating practices.

As part of the design basis for ASME, Section III, transients are defined in terms of their relative severity and number of occurrences. Analytical models of the components are formulated, postulated transient loads are applied, stress time histories are calculated, load combinations

are performed, and fatigue accumulation over the plant design life is established. The calculated fatigue values are compared against ASME Code allowable fatigue, which limits the number of occurrences of the design basis transients. In general, plant thermal and pressure design basis transients are the major contributors to fatigue damage in fatigue-sensitive subcomponents.

Most plants have some form of transient cycle counting requirements. Typically, a small subset of the original design transients are tracked. In addition, ANSI/ASME NQA-1, "Quality Assurance Record Keeping for Nuclear Power Plants," advises plants to keep records of cyclic loading for those components designed to undergo a limited number of cycles.

Manual cycle counting practices manifest themselves in the form of periodic manual review of operating history. These reviews identify the transients defined by the Technical Specification tables and add each recognized occurrence to a cumulative log. In most cases, only those transients delineated in the Technical Specification tables are tracked by this method. Consequently, other transients that may be significant with respect to component fatigue and life cycle management are not monitored.

It is important to track all loads that are significant enough to result in material damage. When interpreted as a function of the design transients, all transients that result in some estimated fatigue degradation would have to be included in the set of transients to track. This set would include transients defined by the Technical Specifications, FSAR, and equipment specifications. Tracking of all loading conditions is not necessarily tied to the act of counting cycles, but is rather an accounting of all loads that result in material damage and that may reduce the component life. Hence, programs that ignore loads because they were considered outside the design basis fatigue analysis (emergency or faulted condition transients) would not meet the intent of a program designed to assess actual, accumulated material damage.

Therefore, an assessment of the actual loads should be made to determine the structural adequacy of a component. In some cases the most cost-effective approach will be to adopt some sort of automatic monitoring. In other cases, only cycles of system operations may be required to show adequate margin in component life. The amount of information required to justify actual loads is dependent largely on the nature of the loads, initiating events, and frequency, and the available margin in the design basis. Good estimates of actual loading can be used both to show adequate margin compared to the design basis, as well as a sound basis for establishing the future transient set to be used in assessing the extended component life. Some locations do not require anything more that a simple record of operating cycles. This would apply to components where: the design transient is always conservative relative to the actual, there are only one or two types of transient states to consider, and there are detailed records or adequate studies to show that the actual cycles are of the same frequency as the design.

In general, operating practices have more effects on the transients associated with plant heatup and cooldown than on transients associated with power operations. The most severe normal condition thermal transient loads almost always result from plant heatup and cooldown operations. Most normal (mode 1) operating condition loads are relatively predictable and

generally less severe than plant heatup and cooldown loads. Therefore, effort should be concentrated on the periods that include plant heatup, hot standby operations, and cooldown operations.

The recognition of limitations in current monitoring methods leads to the development of improved methods for transient and fatigue monitoring. The key objective is to develop a cost-effective method for collecting and maintaining records of transients and fatigue significant loads experienced by the fatigue-sensitive components and to use that information in a way that will result in maintaining plant availability and maximizing the investment on equipment. Automated data collection methods should allow for quick retrieval of sufficient data required to prepare technical justifications in support of design operational conformance or license renewal issues. Further, some systems provide estimates of fatigue damage accumulation that can be correlated with operating modes or unusual operating events, and hence provide valuable feedback to operators, to help identify ways to minimize fatigue significant loads.

5.0 SUMMARY AND CONCLUSIONS

The pressurizer has been reviewed for aging management as part of the Westinghouse Owners Group (WOG) Life Cycle Management/License Renewal (LCM/LR) program. The pressurizer is subject to an aging management review because it performs an intended function, performs this intended function in a passive manner, and is long-lived. This aging management review has identified aging effects and evaluated these effects to determine which require management during an extended period of operation. For the effects that require management, options have been provided.

5.1 SUMMARY

The pressurizer performs the intended function of ensuring the integrity of the reactor coolant pressure boundary for the pressurizer. The pressurizer also supports system level intended functions. This is discussed in detail in Section 2.0.

The aging effects identified for review are:

- Fatigue
- Corrosion/SCC/PWSCC
- Irradiation embrittlement
- Thermal aging
- Erosion and erosion/corrosion
- Wear
- Creep and stress relaxation

In Section 2.0, these effects are identified and evaluated to determine potential degradation of the pressurizer intended function. Potential effects of SCC/PWSCC and boric acid corrosion can be managed by current industry programs, described in Section 4.0. The only effect that will require additional utility action is fatigue. Options to manage fatigue are presented in Section 4.0.

5.2 CONCLUSIONS

Implementation of aging management options will manage identified effects. Therefore, it is concluded that the pressurizer intended function will be maintained during an extended period of operation in accordance with the current licensing basis. System-level intended functions supported by the pressurizer will also be maintained.

This Page Intentionally Left Blank

6.0 REFERENCES

1. US NRC, Requirements for Renewal of Operating Licenses for Nuclear Power Plants, 10 CFR 54, Final Rule (June 1995).

2. PWR Reactor Coolant System License Renewal Industry Report, NUMARC 90-07, Revs. 0 & 1 (October 1990, May 1992).

3. Primary Water Stress Corrosion Cracking (PWSCC) of Inconel 600, U.S. NRC Information Notice No. 90-10 (February 1990).

4. EPRI Survey of Cracking of Alloy 600 Components in PWR Plants, EPRI Memorandum (April 1990).

5. Letter Report MSE-MNA-081(95), "Alloy 600 Primary Loop Locations in Domestic WOG Plants," (March 1995).

6. Letter from J. F. Opeka (CYAPCO) to U. S. NRC Document Control, "Haddam Neck Plant Pressurizer Examination Results," Docket No. 50-213/B14073 (March 1992).

7. Private Communication, Matt Denny, CYAPCO (November 1994).

8. Fatigue Evaluation Procedures, Draft U.S. NRC Technical Position PDLR D1 (December 1991).

9. Interim Fatigue Design Curves for Carbon Steel, Low Alloy and Austenitic Stainless Steel in LWR Environments, NUREG/CR-5999, Argonne National Laboratories Report ANL-9313, US NRC (March 1993).

10. Letter from W. T. Russell (USNRC) to W. Rasin (NUMARC), "U.S. NRC Action Plans Concerning the Issue of Environmental Requalification and Fatigue Analysis of Components," (July 1993).

11. "Completion of the Fatigue Action Plan," SECY-95-245, US NRC, (September 1995).

12. Ware, A. G., et. al., Application of NUREG/CR-5999 Interim Fatigue Curves to Selected Nuclear Power Plant Components, NUREG/CR-6260 (INEL-95/0045), US NRC (March 1995).

13. "Completion of U.S. NRC Fatigue Action Plan," NEI letter, Enclosure 2, from Thomas E. Tipton to NEI Administrative Points of Contact, (November 13, 1995).

14. Jaske, C. E. and V. N. Shah, "Life Assessment Procedure for LWR Cast Stainless Steel Components," Fourth International Symposium on Environmental Degradation of Materials in Nuclear Power Systems – Water Reactors, The Metallurgical Society and NACE Symposium (August 1989).

15. License Renewal Evaluation: Aging Management Evaluation for Class 1 Piping and Associated Pressure Boundary Components, WCAP-14575, Revision 0.

16. Degradation on Failure of Bolting in Nuclear Power Plants, Report NP5769, EPRI.

17. Van Der Sluys, W. A. and Sumio Yukawa, "Status of PVRC Evaluation of LWR Coolant Environmental Effects on the S-N Fatigue Properties of Pressure Boundary Materials," PVP-Vol. 306, Fatigue and Crack Growth: Environmental Effects, Modeling Studies, and Design Considerations, ASME (1995).

18. PWR Primary Water Chemistry Guidelines: Revision 3, EPRI, TR-105714.

19. Rao, G. V. and D. A. Wright, "Evaluation and Resolution of the Primary Water Stress Corrosion Cracking (PWSCC) Incidents of Alloy-600 Primary System Pressure Boundary Penetrations in Pressurized Water Reactors," Proceedings of the Fontevraud II Symposium on "Contribution of Materials Investigation to the Resolution of Problems Encountered in PWR Plants," Royal Abbey of Fontevraud, France, (September 10-14, 1990).

20. Rao, G. V., "PWSCC Susceptibility Assessment Model and Ranking of Alloy 600 RUHP in WOG Plants," WCAP-14586.

Westinghouse Electric Corporation **Energy Systems**

Nuclear Services Division

Box 355
Pittsburgh Pennsylvania 15230-0355

OG-97-055

NRC Project Number 686
WCAP-14574

May 30, 1997

To: Document Control Desk
U.S. Nuclear Regulatory Commission
Washington, DC 20555-0001

Subject: Westinghouse Owners Group
Response to NRC Request for Additional Information on WOG Generic Technical Report WCAP 14574, "License Renewal Evaluation: Aging Management for Pressurizers"

Reference: NRC letter dated May 6, 1997 from R.J. Prato to Westinghouse Owners Group

Attached is the Westinghouse Owners Group revised set of responses to the NRC's Request for Additional Information on WCAP-14574, "License Renewal Evaluation: Aging Management for Pressurizers". This revised set of responses resulted from the discussions and clarifications requested by the NRC during the April 22, 1997 NRC / WOG meeting held to review the initial responses to the WCAP-1457-RAIs.

Please distribute these responses to the appropriate people in your organization for their review. These responses will provide the basis for our discussion at an NRC / WOG meeting scheduled with your office for July 10, 1997 from 1-3 PM.

If you have questions on specific technical issues for this meeting, please contact Robert Sylvester, Westinghouse, at (904) 474-4356, Charlie Meyer, Westinghouse, at (412) 374-5027, or myself at Wisconsin Electric Power Company, (414) 221-2002.

Very truly yours,

Roger A. Newton

Roger A. Newton, Chairman
LCM/LR Working Group
Westinghouse Owners Group

cc: R.J. Prato, USNRC, (1L, 1A)
Pao-Tsin, USNRC, (1L, 1A)
LCM/LR Working Group (1L, 1A)
Steering Committee (1L, 1A)
C.E. Meyer, WEC 4-22 E (1L, 1A)
R.L. Sylvester, Westinghouse Pensacola(1L, 1A)
A.P. Drake, W, (1L, 1A)

97OG055.doc

REQUEST FOR ADDITIONAL INFORMATION
WESTINGHOUSE OWNERS GROUP TOPICAL REPORT WCAP-14574,
"License Renewal Evaluation: Aging Management Evaluation for Pressurizers"

RAI and Report Section Cross Reference Table

RAI NUMBER	DESCRIPTION	REPORT SECTION
1	(a) Include an evaluation of environmental effects and (b) provide detailed background information on the insurge-outsurge program	2.5, Table 2-10, 2.6.1, & 4.2
2	Clarify that references to the ASME Section XI Code are to the 1989 edition	4.2
3	Describe how ISI will prevent failure of the pressurizer caused by current design-basis fatigue loads	4.2
4	Clarify that the staff does not endorse the ASME status of the PVRC environmental effect evaluation	4.2
5	Clarify the discrepancy regarding surge line nozzle materials	No Change
6	Evaluate IGSCC as a potential aging effect for specific pressurizer components	No Change
7	Include a one-time LR inspection for clad cracking	2.6.3
8	Provide an aging management program for boric acid wastage or a justification that aging management is not required	3.2.2
9	Clarify if manway gaskets are subject to an aging management review. Describe Alloy 600 diaphragms to identify any potential aging effects.	3.2.2
10	Evaluate potential boric acid corrosion of bolt holes and manway covers	3.2.2
11	Identify components welded to the inside of the pressurizer and evaluate potential weld cracking	2.3.4
12	Evaluate potential aging effects on thermal sleeves	No Change
13	Describe Westinghouse heater penetrations and identify and evaluate any potential aging effects	2.3.2
14	Describe heater penetration weld inspections	No Change
15	Evaluate IEB 79-17 for applicability to cracking of stainless steel safe ends and surge line nozzles	No Change
16	Clarify which edition of the ASME Section XI Code is referenced in the report	4.0
17	Discuss how the effectiveness and reliability of ultrasonic examinations will be ensured. Discuss reliance on Appendices VII and VIII, as appropriate.	4.0
18	Describe how generic communications have been reviewed during preparation of the report.	2.6
19	Evaluate aging effects on small nozzles that are exempt from ASME Section XI examinations	No Change
20	Evaluate potential cracking of carbon steel base metal welded joints and stainless steel cladding	7.1.2

97OG055.doc

REQUEST FOR ADDITIONAL INFORMATION
WESTINGHOUSE OWNERS GROUP TOPICAL REPORT WCAP-14574,
"License Renewal Evaluation: Aging Management Evaluation for Pressurizers"

Request for Additional Information

1. With respect to Step 1 of the Proposed Industry Position on Fatigue Evaluation for License Renewal (the "Position") in Subsection 4.2, the staff requests the following:

   a. Subsequent to the evaluation of the current and projected transients for the license renewal term, the WOG should implement the recommendation for license renewal contained in SECY-95-245, "Completion of the Fatigue Action Plan". The staff's Fatigue Action Plan (NUREG/CR 6260) evaluated components whose usage factors were calculated with fatigue curves that included environmental effects, and resulted in high usage factors. For these components, the WOG should also perform an evaluation, using the most current environmental fatigue effects, for the period of extended operation. As applicable to the pressurizer, provide a specific commitment, in the discussion of the "Position" that this will be done either generically or plant specifically.

   b. Step 1d in the "Position" discusses future reconstitution of surge line piping load transients resulting from plant-specific application of the WOG program for pressurizer insurge-outsurge transients mitigation. The WOG program is identified as report number MUHP-5060/5061/5062 in Subsection 2.6.1. Provide more detailed background information on this program. Discuss the relationship of this program to the NRC Bulletin 88-11.

Response

The report will be modified to incorporate the revised proposed industry position on fatigue. This revised proposed position considers environmental effects for an extended period of operation.

The following generic evaluation was performed to consider, in a conservative manner, environmental effects in the initial screening of subcomponents (Table 2-10) with a projected fatigue service greater than 60 years. This generic evaluation was not performed on subcomponents with less than 60 year projected fatigue service because these subcomponents have already been identified as potentially fatigue sensitive and will be further evaluated, consistent with the proposed industry position, on a plant-specific basis.

Ratios of NUREG/CR-6260 40-year CUF_{en} and the design CUF for Westinghouse plants, newer and older vintage plants, were calculated for subcomponents with a 40-year CUF_{en} greater than 1.0 in the NUREG. The largest ratio was calculated for the older vintage surge line: 4.7 (4.248/0.90). The surge line would also be fairly representative of environments and operations affecting the pressurizer. The surge line 40-year CUF has been reduced by a factor of 10 (TR-105759). This indicates the conservative nature of the above estimates for screening.

The conservative ratio (4.7) was applied to the projected fatigue service values in Table 2-10. Only three additional subcomponents had a projected fatigue service, considering this conservative environmental effects screening ratio, less than 60 years: lower head (42 years), safety and relief nozzle (53 years), and instrument nozzles (51 years).

97OG055.doc

The lower head has already been identified as fatigue sensitive in the report because of the insurge-outsurge issue. The safety and relief nozzle and the instrument nozzle will be added to the list of potentially fatigue significant subcomponents and addressed in section 4.

The conclusion of this generic evaluation is that only two additional subcomponents are potentially fatigue sensitive, considering a conservative environmental screening factor. Further evaluations. consistent with the proposed industry position, will continue to be plant-specific.

The plant-specific evaluation, as described in section 4.2, will be modified to be consistent with the revised proposed industry position. The revised industry position has expanded the first step to clarify that environmental effects will be considered, as appropriate. Specifically, the first step in the revised process (identifying fatigue sensitive subcomponents) includes consideration of reactor water environmental effects. If subcomponents are identified as fatigue sensitive based on this preliminary screening, the second step quantitatively addresses the significance of environmental effects. For subcomponents that are not identified as fatigue sensitive in step one, the CLB cyclic duty is checked to confirm it envelops the number of cycles expected through the license renewal term.

Changes to sections 2.5, 2.6.1, & 4.2 and Table 2-10 will be made to incorporate the revised proposed industry position that considers environmental effects.

Step 1d in the proposed industry position addresses potential reconstitution of pressurizer lower head and surge nozzle thermal transients that may result from plant specific application of the WOG program on insurge-outsurge transients mitigation. This is not directly related to NRC Bulletin 88-11. The WOG program MUHP-5060/5061 background is provided in Subsection 2.6.1. and is currently ongoing. The final insurge-outsurge report describing options for modified operations to mitigate insurge-outsurge transients, and associated design transients. is anticipated to be issued to the WOG by the end of 1997. The WOG utilities will then have criteria to determine the significance. if any, of the insurge-outsurge issue at their plants. and the opportunity to implement modified operating procedures to mitigate such transients, if deemed necessary. They will also have the information required to evaluate the relative impact of any reconstituted plant-specific transients on the pressurizer lower head and nozzle. In these evaluations, all applicable loadings will be applied. including the surge line piping loads on the surge nozzle, resulting from stratification in the surge line. as addressed by NRC Bulletin 88-11.

Request for Additional Information

2. Step 2 in the "Position" states that any changes to the existing inservice inspection (ISI) program from future risk-based considerations should be included in the pressurizer aging management program. A clarification is needed in Step 2 and in all other applicable sections of this report to emphasize that the ISI program should be based on the 1989 Edition of American Society of Mechanical Engineers (ASME) Section XI, and that any deviation from this standard should be reviewed and endorsed by the staff.

Response

The following text will be added to the end of the fourth sentence of the second paragraph for the step 2 description:

"... risk-based considerations should be included **as endorsed by the staff."**

Other specific references to ASME Section XI requirements will be clarified to be those "endorsed by the staff" where appropriate.

Also. sections 2 and 4 will be revised to indicate that references to ASME Section XI Code are to the 1989 edition of the Code (see the response to RAI 16).

Request for Additional Information

3. In reference to Step 2 of the "Position". describe how the proposed ISI program will provide a fatigue aging management program that will prevent failure of the pressurizer under current design-basis loads for the period of extended operation, consistent with the requirements in 10 CFR 54.21(c) (1).

Response

The last paragraph of step 2 of the "Position". in section 4.2 (Rev. 0, page 75), will be clarified to explain how ISI requirements manage cracking caused by fatigue and why a program based on these ISI requirements will continue to be effective during an extended period of operation. This paragraph will be modified as follows:

"Since the examination methods and related evaluations described above will allow the detection. evaluation, and/or repair of **minor** cracks, caused by fatigue, this management option will maintain the pressurizer intended function. **Specifically, the flaw acceptance standards in subsection IWB-3500, the current industry accepted criteria, are stringent enough that indications identified by the evaluations do not represent a loss of the reactor coolant pressure boundary intended function of the pressurizer under design-basis loads. It is noted that other plant programmatic requirements (Technical Specifications - RCS Operational Leakage Limits) require a plant shutdown to repair the degradation before an intended function would be lost. The criteria of IWB-3500 would allow further evaluation and/or repair of indications prior to the loss of the intended function of the pressurizer.** These inspections are required periodically and are not tied to a specific design life. Because the transient loading frequencies are not anticipated to significantly increase during the license renewal period, these inspection **periods** will remain effective throughout the license renewal period, **as long as CLB cyclic commitments are met (as confirmed in step 1)."**

It should be noted that the proposed industry position defines the CLB as a combination of the fatigue design basis. the fatigue operating basis. and the regulatory oversight process. This definition includes any requirements for assuring that the plant operates within commitments on cyclic duty, and items such as resolution of generic fatigue issues or regulatory information notices and bulletins.

Request for Additional Information

4. The last paragraph in Step 3 of the "Position" states that based on the general status published by the PVRC and the expected PWR water chemistry, it does not appear that environmental effects in fatigue will be a significant issue for the pressurizer. It should be emphasized in Step 3 that the staff has not endorsed Ref. 17. Revise Step 3 to eliminate the reference to the PVRC report.

Response

To provide WOG utilities with a complete status of activities related to environmental effects on fatigue, the PVRC reference will not be deleted as requested by the staff. The following text will be added after the first sentence in the last paragraph of the step 3 description:

> "It is noted that, at the time of this writing, the USNRC staff has not endorsed the PVRC results in reference 17. Any plant specific evaluations of environmental effects in fatigue should be performed according to those endorsed by the NRC staff at the time of the evaluation."

Request for Additional Information

5. WCAP-14574, Page 14 states that the pressurizer surge line nozzles are carbon steel but the Nuclear Management and Resources Council (NUMARC) Report 90-07, October 1990. Pages 4-12, states that surge line nozzles on Westinghouse and CE pressurizers are cast stainless steel. Provide a clarification of this apparent discrepancy.

Response

Contrary to the statements in the Nuclear Management and Resources Council (NUMARC) Report 90-07 October 1990, Page 4-12, Westinghouse pressurizers DO NOT have pressure boundary nozzles, including surge line nozzles, manufactured from cast stainless steel. The surge nozzles for Westinghouse pressurizers are either cast integral with the lower head, as is the case for units with a cast lower head, or a separate forged nozzle welded to the head for cases in which a fabricated head is used. For units with cast heads and an integrally cast nozzle, the material is cast low alloy carbon steel to ASME SA216 Grade WCC (except for Haddam Neck which is SA 216 Grade WCB). For pressurizers with fabricated heads, the surge line nozzles are forged from SA 508 C1 2a and welded to a head fabricated from SA 533 Gr. A CL 2 low alloy carbon steel plate.

No changes to Section 2.3.2 of the report are considered necessary.

Request for Additional Information

6. The WOG did not identify intergranular stress corrosion cracking (IGSCC) as a potential aging effect. For the shell/heads, spray line nozzle, valve nozzle, manway, instrumentation nozzle, surge line nozzle and support skirt, the staff considers IGSCC a potential aging effect because it can occur during shutdown operating conditions (i.e., the water chemistry) as a result of (1) oxygen being introduced to primary coolant during cooldown to control CRUD-bursts, and (2) exposing the primary coolant to air during shutdown. Stainless steel cladding may have regions of low delta ferrite that have been sensitized during post weld heat treatment (PWHT) and thus susceptible to IGSCC; ASME Section XI requires inspection of weld and weld regions.

Response

With the exception of the instrument nozzles, all pressure boundary components are stainless steel clad low alloy steel. Only the clad surfaces, Inconel 82/182 Nozzle/Safe End welds and the instrument nozzles are exposed to primary water. The stainless steel instrument nozzles are installed after all post weld heat treatments (PWHTs) have been completed and are welded using procedures limiting heat input to minimize the potential for sensitization. Therefore, for shell/heads, spray nozzle, safety/relief nozzles, manway, instrumentation nozzle, and surge nozzle, intergranular stress corrosion cracking (IGSCC) is not considered a potential aging effect. For the pressurizer cladding and internal attachments, even when sensitized to the severity and manner expected during component fabrication, IGSCC has not been observed as a generic aging issue and these components are expected to operate satisfactory under normal plant chemistry conditions since contaminants, particularly oxygen, are controlled to very low levels. In instances during shutdown where oxygen may exceed recommended limits for short periods of time, the cumulative affect of such conditions on IGSCC is not considered to be an issue. Furthermore, the inhibited effects by the presence of both boric acids and hydrogen in the primary system will tend to minimize oxygen levels. In cases of known extended periods of off chemistry or if high oxygen levels are present, plant-specific inspections of these components could be performed as deemed necessary.

Sensitized stainless steel cladding has long been recognized as an industry practice resulting from required manufacturing PWHT operations on ferritic base materials. Such practice is recognized by NRC and has been addressed in Reg. Guide 1.44 allowing exceptions to weld metal with delta ferrite content greater than 5%. Since the cladding process is qualified to meet delta ferrite greater than 5%, and the degree of sensitization has been minimized during welding by limiting heat input, and the material exposed to reactor coolant has less than 0.10 ppm dissolved oxygen at temperatures above 200° F, therefore, no aging management program is needed. In the few cases where surface flaws may exist, it has been shown that crack propagation, should the crack occur in the cladding, would not propagate into the underlying base metal.

The stainless steel wrought safe end materials are not in the "severely sensitized" condition which has contributed to failures in wrought sensitized stainless alloys in BWR reactor systems. Stated simply: the conditions and materials associated with sensitized stainless steel failures are not present in Westinghouse PWR pressurizer vessel stainless steel components.

There are no Alloy 600 base metal parts used in domestic Westinghouse pressurizers. However, there are applications where Inconel 82/182 weld metal are used for nozzle buttering to Safe-End welds . These materials have been identified in testing to be susceptible to PWSCC. Weld failures due to PWSCC in Inconel 82/182 weld metal have not been identified in domestic Westinghouse

pressurizers . All of the service failures reported are associated with pressurizers have been limited to Alloy 600 and associated with the heat affected zone within these materials and not in or initiated in the weld materials. Should such indications occur, the present ISI programs would identify potential issues and at that time be considered under an Aging Management Program as appropriate.

Request for Additional Information

7. The staff disagrees with the WOG conclusion that aging management for the cladding of the pressurizer is not needed. The staff believes that cracks in the clad could propagate into the base metal and should be addressed by an aging management program. A program to demonstrate the integrity of the cladding could be a one-time license renewal inspection of the cladding and any attachment welds to the cladding.

Response

The WOG maintains the position that the clad cracking at Haddam Neck was not caused by age-related degradation. In addition, there is no other evidence of generic age-related cracking of Westinghouse pressurizer cladding. This generically applicable report will be revised as follows to clarify the justification for the WOG position.

"In 1990, the Connecticut Yankee Atomic Power Company (CYAPCO) discovered and reported a 10- to 20-inch wide band of crack-like indications in the Haddam Neck pressurizer cladding. The cracking extended 360° around the circumference of the pressurizer and was located about 1 to 2 feet below the normal water level [Refs. 6 and 7]. NDE investigations established that at least some of the indications penetrated the cladding to the cladding-ferritic base metal interface. Review of plant operating records revealed that the same band of indications had been reported as early as 1970. The indications may have been caused by a spray of cold water from the spray nozzle onto the cladding during a low water level transient, which the plant operating records show occurred prior to the 1970 inspection that first discovered the indications. Alternatively, the indications may have been present during initial start-up. Whatever the cause of the indications, they have been dormant since at least 1970. This has been confirmed by inspections subsequent to the 1990 inspections using a more accurate inspection technique. Therefore, the crack-like indications were not caused by an aging related degradation process such as fatigue or stress corrosion cracking. This condition has recently been reviewed to the satisfaction of the USNRC. On the basis that this condition is unique to the Haddam Neck pressurizer, and that it is not an aging related form of degradation, it is not considered further in this generic evaluation."

Request for Additional Information

8. The staff disagrees with the report's conclusion that boric acid corrosion does not affect any components and that no aging management is needed. The WOG appears to be relying on a program to mitigate the effects of boric corrosion so as to conclude that boric acid is not an aging effect. The staff considers the loss of base metal on external surfaces from boric acid wastage as an aging effect that must be managed.

   Revise your report to provide for aging management of boric acid corrosion or provide justification that no aging management is needed.

Response

The staff has misinterpreted the WOG's position on boric acid corrosion. The WOG position is that external pressurizer components may be affected by boric acid leakage. The effects resulting from boric acid leakage, an event that causes degradation, are managed by current activities described in paragraph 3 of section 3.2.2. The WOG position is that an event management program limits degradation and precludes aging from occurring.

To clarify the event management program to the staff, further descriptions of the program will be provided in section 3.2.2.

Request for Additional Information

9. The report is not clear about whether the manway gasket is in the scope of license renewal. 10CFR 54.21(a) (1) (ii) requires structures and components not subject to replacement based on a qualified life or specified time period be subject to an aging management review. Does this gasket meet this criteria? The staff also needs more details about the seal-welded Alloy 600 diaphragm and an assessment of the need to manage the aging of this component and material.

Response

Manway gaskets are within the scope of the Rule, however, gaskets are not subject to aging management as identified in Table 2-1. Gaskets are replaceable items that must be replaced every time the manway is opened. Failure of the pressurizer manway gasket between periods of maintenance when the manway is opened, can result in leakage of the gasketed joint. Leakage of the manway joint is considered to be an event driven mechanism and not an aging degradation mechanism and is managed by current activities described in paragraph 3 of Section 3.2.2. To clarify the event management program to the staff, further descriptions of the program will be provided in section 3.2.2

As stated in section 2.3.2, the seal welded diaphragm is an alternate closure used when sealing with a standard gasket is not possible due to gasket seat damage. This alternate closure is intended to be a short term solution and is to be removed when repairs to the gasket seat are performed. The diaphragm and diaphragm weld is managed in the same way as the gasketed joint and can be replaced when determined necessary. Since there is no wide spread use of the welded diaphragm closure, aging of this item shall be addressed on a plant specific basis. The report will be updated to reflect this position.

Request for Additional Information

10. Describe the potential for (1) corrosion of the bolt holes in the carbon steel manway cover and (2) corrosion of the manway cover at the interface between the cover and insert if a leak were to occur through the gasket.

    The staff considers aging management programs necessary for the bolted manway connection to ensure against cracking and loss of preload. The staff has recognized programs proposed by industry that include such elements as ASME Code Section XI "Examination Category B-G-1 & 2, (Ref. 2) and B-P, " system leakage and hydrostatic testing, programs in response to IE Bulletin 82-02, "Degradation of Threaded Fasteners in Reactor Coolant Pressure Boundary of PWR Plants", and technical specification leakage limits. Revise your topical report to include management of the bolted connection or provide justification for not doing so.

Response

It is the WOG's position that loss of material due to boric acid corrosion of bolt holes and manway covers is an event driven effect. Specifically, this event can be managed by the event management program as described in section 3 (see the response to question eight above).

Request for Additional Information

11. Identify components welded to the inside of the pressurizer vessel and discuss the management of cracking of these welds for the period of extended operation (If welds crack, the cracks could potentially propagate into the vessel, affecting its integrity.).

Response

All internal supports to the pressurizer cladding are welded with 308 or 308L filler material. These include:

- Spray head coupling
- Upper heater support plate bracket
- Lower heater support plate bracket
- Surge nozzle retaining basket and
- Heater welds

Testing of 304 attachment materials and their weldments using ASTM A262 Practice E show that the heat affected zone (HAZ) of both sides of the weldments are not sensitized as would be expected for the carbon content normally found in type 304 stainless steel. This level of carbon has previously shown to have little effect on the susceptibility of the material to sensitization as a result of welding with controlled heat input. The most important parameters governing whether a joint will have a sensitized HAZ are heat input and joint thickness. Both heat input during welding and plate thickness are below the threshold where sensitization would be predicted to occur.

The components attached to the inside of the pressurizer are shown in Figure 1 (attached). These attachments are:

a) The spray head coupling manufactured from SA 213 Type 304 stainless steel is welded to the upper head clad surface with a full penetration weld.

b) The upper heater support plate bracket assembly manufactured from SA 240 Type 304 stainless steel is welded to the lower shell barrel with 1/2" fillet welds.

c) The lower heater support plate bracket assembly manufactured from SA 240 Type 304 stainless steel is welded to the lower shell barrel with 1/2" fillet welds.

d) The surge nozzle retaining basket manufactured from A-167 Type 304 stainless steel welded to the lower head clad with a 1/4" fillet weld.

No generic aging management program is necessary for the components since generic cracking issues for the component welds have not occurred.

This information will be included in Section 2.3.4, Internal Attachments Welded to the Cladding.

Request for Additional Information

12. Thermal sleeves have experienced age-related degradation. Provide an evaluation of the relevant operating experience and discuss its applicability to the thermal sleeves in the scope of this report.

Response

There have not been any reported age related degradation associated with the thermal sleeves utilized for the surge and safety nozzles on Vestinghouse pressurizers. The only know incidence of thermal sleeve degradation have been associated with thermal sleeves in piping applications where the thermal sleeve was exposed to cross flow velocities causing flow induced vibration. The thermal sleeves utilized in the pressurizer are not subjected to cross flow velocities associated with flow induced vibration. Therefore, potential degradation by flow induced vibration is not present in the pressurizer. Degradation by thermal fatigue has been addressed in the design of the pressurizer thermal sleeves. The thermal sleeves are welded to the nozzle in such a manner to minimized the stresses in the attachment weld due to thermal shock. Refer to Figure 2.

Request for Additional Information

13. The WOG does not provide any drawings or enough detail on their heater configurations and welds. The WOG (on Page 41) attributes damage to improper maintenance and states that heaters are designed to be replaced and will not impact pressurizer function. In contrast, the industry found, and the staff agreed, that components such as stainless steel heater sheaths and end plugs, sleeves and partial penetration welds could crack and that cover plates are susceptible to loss of material due to boric acid wastage. The WOG should provide more details and drawings on the heater components, indicate which parts form the pressure boundary, and discuss aging management.

Response

The heaters used in the Westinghouse pressurizer are direct immersion type resistance heaters. The heaters comprise a stainless steel sheath that forms the primary pressure retaining function of the heater and a secondary hermetic pressure seal where the electrical leads exit the heater to retain pressure in the unlikely event of a heater sheath failure. The heaters are installed in a heater well nozzle. The heater well is SA-182 type 316L stainless steel and are attached to the pressurizer as identified in Section 2.3.2. The heaters are then welded to the heater well. Refer to Figures 3 and 4 (attached) heater well and heater welds. These figures and this information will be added to Section 2 of the report.

The heater well to pressurizer weld is a partial penetration weld and as such requires a visual inspection of external surfaces for leakage in accordance with ASME Section XI IWB 3522 as part of the vessel ISI program. Refer to proposed industry position on fatigue for management of the heat well to pressurizer weld. Confirmation of acceptance and repairs are covered through the established plant-specific ISI programs.

Request for Additional Information

14. Describe the provisions for examining heater penetration welds.

Response

As stated in question 13, the heater well to pressurizer weld is a partial penetration weld. The weld is made between the well and the head cladding on the inside of the pressurizer. Therefore. direct inspection of the internal weld is not practical. As required by ASME Section XI, this weld is included in the ISI program. As a partial penetration weld it requires visual inspection of the external surfaces for evidence of leakage. Refer to question 13 and Figure 3 (attached) for further information.

Request for Additional Information

15. Discuss whether Inspection and Enforcement Bulletin (IEB) 79-17, which discusses pipe cracks in stagnant borated water, is applicable to stainless steel safe ends on the relief and surge line nozzles. Are any of the management programs resulting from IEB 79-17 applicable to the stainless steel safe ends or surge line nozzles?

Response

IEB 79-17 is judged not to be applicable to the relief and surge nozzle stainless steel safe ends. The IEB 79-17 addresses cracking due to exposure to stagnated borated water. The pressurizer nozzles in question are not subjected to the same environment as reported in IEB 79-17. The relief nozzle is located in the top head of the pressurizer and the normal environment is steam. The surge nozzle located in the lower head. is not a stagnant line and is therefore not exposed to stagnated borated coolant.

97OG055.doc

Request for Additional Information

16. For the inspections that are intended to be performed to the ASME Code, the edition of the ASME Code the WOG is referring to should be clearly stated.

Response

The following text will be added to section 1.0:

> "References made to ASME Section XI in section 4.0 are to the 1989 edition, the most recent edition approved at the time of publication of the GTR. Utilities using this GTR in the future should consider the most recently approved edition of ASME Section XI at the time the application for that plant is prepared. Utilities can develop aging management programs on non-approved editions. however, the utility must also provide the demonstration explaining:
> 1. How that edition manages the aging effect and
> 2. Why it will be effective during an extended period of operation.
>
> The references made to the 1989 edition in section 4.0, are provided as a example for utilities to follow during preparation of their plant-specific license renewal application."

The following text will be added at the end of the second paragraph of section 4.0:

> "Program attributes to manage these potential aging effects are given in Tables 4-2 through 4-5. The attributes are based on ASME. Section XI, 1989 code edition. subsections IWA or IWB as applicable. See section 1.0 for further clarification to the use of ASME Section XI editions."

Also - Tables 4-2, 4-4, and 4-5 will have the following text included in the titles:

> "Code References to 1989 ASME Section XI Edition"

Request for Additional Information

17. To ensure the effectiveness and reliability of ultrasonic examinations performed for license renewal is it the WOG's intent to rely upon Section XI, Appendices VII and VIII? If it is not. the WOG should discuss how it will ensure the effectiveness and reliability of ultrasonic examinations.

Response

The following text will be added at the end of the second paragraph of section 4.0 (after the text added by the response to RAI 16. above):

> "The extent to which individual utilities reference the mandatory appendices VII and VIII of ASME, Section XI inspections will depend on the current inservice inspection Code of Record at the plant. For Codes of Record prior to the 1989 Edition of Section XI, these appendices may not apply. Individual license renewal applicants may reference the appendices in conjunction with a description of the plant Code of Record. Technical justification for programs that deviate from the 1989 edition of Section XI and Appendices VII and VIII should be provided in a license renewal application for a plant."

Request for Additional Information

18. With the exception of the discussion in Section 3.2.2 relative to Generic Letter 88-05 and a reference to Bulletin 88-11 in Section 4.2, this GTR does not appear to include any other references to generic communications for aging effects evaluations or aging management programs. Describe the process that the WOG used for reviewing applicable generic communications and associated licensee commitments. If any generic communication will be used as a part of aging management activities for the pressurizer, provide the basis for using such programs in Section 4.0 of this GTR.

Response

Section 2.6 will be revised to describe the process used by the WOG to review Generic Communications. An updated review will be performed to capture any additional issues that have occurred since the original review was done two years ago.

The following information was provided to the authors in the WOG GTR template:

> "Identify plant-specific operating experience which identifies aging effects. Review operating & maintenance history. This should include, but is not limited to: plant maintenance data, inservice inspection data. industry experience, NPRDS data. vendor data, EPRI reports, NUREGs. Licensee Event Reports (LERs), DOE Aging Management Guidelines (AMGs), NUMARC License Renewal Industry Reports, NRC generic letters/bulletins/notices, the Westingnouse Information Delivery System (IDS), and the internet. Many of these sources are readily available in the technical library. When using the internet, as any other reference. ensure that the information is timely. Identify any unresolved issues, see the Westinghouse technical lead for the latest EPRI memorandum"

Request for Additional Information

19. Are there any small nozzles (e.g., sampling and level sensing nozzles) exempt from ASME XI examinations? If so. describe the aging management program for them.

Response

All small nozzles in the Westinghouse pressurizer design are attached to the vessel using partial penetration welds of the nozzle to the cladding. As such, all of these nozzles are included in the ASME Section XI ISI program and require visual inspection of the external surfaces in accordance with IWB 3522. This requirement is based on current regulation. <u>not</u> aging. Refer to Figure 5 for nozzle to clad weld.

Request for Additional Information

20. In another review, the staff agreed that cracking of the carbon steel base metal welded joints and of the stainless steel cladding are potential aging effects due to the possibility of having pre-service and service induced flaws. Discuss whether the Westinghouse pressurizer is subject to the same effects and whether it should be under an aging management program.

Response

Known pre-service and service induced flaws are not the result of aging and therefore not subject to an aging management review under the Rule. The known service induced flaw (cladding cracks at Haddam Neck) has been related to an operational event and has not showed signs of further aging degradation.

These plant-specific events that lead to non-age-related degradation should be evaluated on a plant-specific basis. This will be reflected in a new section - 7.0, Use and Application of a Generic Technical Report in a License Renewal Application. Specifically, section 7.1.2 include the following description:

> "One example of a characteristic not bounded by the GTR is plant-specific pre-service or service induced flaws. It is the responsibility of the plant to determine if any pre-service or service induced flaws at their plant have occurred and are related to aging. If a flaw is determined to be age-related. the related aging effect should be evaluated per the requirements of the LR Rule. If the evaluation determines the aging effect will degrade an intended function, an appropriate aging management program should be described and justified."

All receive 1L, 1A

bcc:

M.A. Gray	ECE 313M
T.A. Meyer	ECE 4-22
M.P. Osborne	ECE 4-22
S.R. Bemis	ECE 5-16
S.A. Binger	ECE 5-16
J.D. Campbell	ECE 5-16
S.M. DiTomasso	ECE 5-16
A.P. Drake	ECE 5-16

97OC-155.doc

Domestic Utilities
Ameren UE
American Electric Power
Carolina Power & Light
Commonwealth Edison
Consolidated Edison
Duke Power
Duquesne Light
Florida Power & Light
New York Power Authority
Northeast Utilities
Northern States Power
Pacific Gas & Electric
Public Service Electric & Gas
Rochester Gas & Electric
South Carolina Electric & Gas
Southern Nuclear
South Texas Projects Nuclear
Tennessee Valley Authority
TU Electric
Virginia Power
Wisconsin Electric Power
Wisconsin Public Service
Wolf Creek Nuclear

International Utilities
Electrabel
Kansai Electric Power
Korea Electric Power
Nuclear Electric LTD
Nukleama Elektrana
Spanish Utilities
Taiwan Power
Vattenfall

WOG 20 YEARS
Westinghouse Owners Group

OG-99-070

NRC Project Number 686

July 19, 1999

To: Document Control Desk
U.S. Nuclear Regulatory Commission
Washington, DC 20555-0001

Attention: R.K. Anand, Project Manager
License Renewal Project Directorate

Subject: Westinghouse Owners Group
Response to NRC Request for Additional Information on WOG Generic Technical Reports: WCAP-14574, "Aging Management Evaluation For Pressurizer" and WCAP-14575, "Aging Management for Class 1 Piping and Associated Pressure Boundary Components"

Reference: Request For Additional Information (Received from NRC, NRR - Raj Anand via fax 6/4/99)

Attached are the Westinghouse Owners Group responses to the NRC's Request for Additional Information on WOG Generic Technical Reports: WCAP-14574, "Aging Management Evaluation For Pressurizer" and WCAP-14575, "Aging Management for Class 1 Piping and Associated Pressure Boundary Components." Please distribute these responses to the appropriate people in your organization for their review.

If you have any questions regarding these responses, please contact Charlie Meyer, Westinghouse, at (412) 374-5027, or myself at Wisconsin Electric Power Company, (414) 221-2002.

Very truly yours,

Roger A. Newton

Roger A. Newton, Chairman
LCM/LR Working Group
Westinghouse Owners Group

cc: R.K. Anand, Project Manager, USNRC License Renewal Project Directorate, (1L, 1A)
C.I. Grimes, Director, USNRC License Renewal Project Directorate (1L, 1A)
WOG LCM/LR Working Group (1L, 1A)
WOG Steering Committee (1L, 1A)
A.P. Drake, W (1L, 1A)
C.E. Meyer, W (1L, 1A)
F.A. Klanica, W (1L, 1A)
M.A. Gray, W (1L, 1A)

99OG070.doc

NRC Request for Additional Information on WOG Generic Technical Report WCAP-14574, "Aging Management Evaluation For Pressurizer"

(1) Does any of the applicable plants rely on RCS pressure control function of the pressurizer to prevent or mitigate the consequences of design-basis events? If it does, please do the following:

(a) The report should include this factual information, indicating that RCS pressure control function is an intended function of the pressurizer, per 10 CFR 54.4(a)(1)(iii).
(b) Explain, why the components, such as spray head, which are relied upon to spray subcoooled water inside the pressurizer to control RCS pressure, is not included within aging management review (AMR). The staff believes that such components are passive, and are not subject to replacement based on a qualified life or specified time period.

Response to RAI #1:

There is no safety analysis which utilizes the RCS pressure control functions of the pressurizer (heaters and sprays) to prevent or mitigate the consequences of a design basis event.

Request for Additional Information on WCAP-14575, "Aging Management for Class 1 Piping and Associated Pressure Boundary Components"

(1) In page 27, Section 2.3.2.2, "Branch Line Restrictors," please clarify the following:

(a) Whether the Class 2 pipes, and the flow restrictors in Class 2 pipes are within the AMR.
(b) Explain, why the flow restrictors in early plants may not be applicable.
(c) The report has listed only one intended function for flow restrictors, which is the pressure boundary function, per 10 CFR 54.4(a)(1)(i). However, the report also indicates that the 3/8-inch flow restrictors are relied upon to limit mass flow rate during postulated breaks. Explain, why the intended function of flow restrictors to prevent or mitigate the consequences of design-basis events, per 10 CFR 54.4(a)(1)(iii), was not identified as an intended function relevant to AMR. Recall that the rule requires one to demonstrate that the effects of aging must be adequately managed so that all the intended functions of a component will be maintained consistent with the CLB for the period of extended operation. Therefore, all the passive intended functions per 10 CFR 54.4(a) should be specifically listed in the report.

Response to RAI #1

(a) WCAP-14575 covers only the Class 1 piping and those flow restrictors installed in Class 1 piping. Class 2 piping and flow restrictors installed in Class 2 piping are not included.
(b) The wording used in the report which suggests that "flow restrictors in early plants may not be applicable" is included in a sentence which qualifies that statement to early plants that were not covered by safety classifications. In the context of preceding sentences, the ability to downgrade safety classification from Class 1 to Class 2 downstream of an installed flow restrictor is not applicable to these early plants, since they are not covered by this safety classification protocol.

99OG070.doc

(c) The report states that "restrictors limit the maximum flow through a broken line to a value below the makeup capability of the CVCS." Therefore, any line break downstream of a flow restrictor is not a design basis event, because of this design feature. The absence of a design basis event eliminated Part 54.4(a)(1)(iii) as a reason for including this flow restrictor function as an intended function, i.e., a design basis event could not be prevented or mitigated because there is no design basis event.

This interpretation of Part 54 has been modified since the report was written. Section 2.3.2.2 and the "summary" sections will be modified to identify "limit flow due to a downstream break to a value less than the normal RCS makeup capability" as an intended function of the flow restrictors. Because the flow restrictor forms an integral part of the piping where it is installed, subsequent discussion on aging effects and aging management for the piping are applicable also to the flow restrictors.

Request for Additional Information #2

(2) In page 43, Section 2.3.2.4, "Thermal Barrier and RCP Seals," the report states that, "....the RCP seals are a replaceable component and, as such, are exempt from license renewal." The staff disagrees with this conclusion because in accordance with 10CFR54.21(a)(1)(ii), just being a replaceable component does not qualify it to be exempt from AMR. The rule states that in order to be exempt from AMR, a component must be replaceable based on a qualified life or specified time period. Therefore, the report should also provide a specified time period of replacement for the RCP seals, as required by the license renewal rule.

Response to RAI#2

The intent of the wording in Section 2.3.2.4 was to explain that the RCP seals do not require an AMR for the purposes of license renewal.

Section 3.1.6 discusses the operating and maintenance experience relating to RCP seals, and states "The pump seals are considered part of the overall active function of the pump. This issue is not a licensing renewal concern because pump seals are part of a preventive maintenance (replacement) program."

Although the rule requirement for exemption from an AMR is quite explicit, the Statements of Consideration to Part 54 does allow for an applicant to provide site-specific justification in an application for excluding components that are replace based on performance or condition monitoring from an AMR.

RCP seals are a highly visible and closely monitored element of the reactor coolant system. Unlike other parts of the system, they do not maintain a pressure boundary, but rather allow controlled leakage which is acknowledged in plant Technical Specifications. This leakoff is closely monitored in the control room, and a high leakoff flow is alarmed as an abnormal condition, requiring corrective action. Certain parts of the RCP seal "package" (e.g., backup seals) are subject to wear, and these parts are routinely replaced, as are installed o-rings. The main RCP seal is routinely inspected during plant outages based on manufacturer's recommendations, and is replaced based on either the results of that inspection, or on leakoff performance during operation. The RCP seal was never intended to be a long-lived (life of the plant) component, although the specific time period for replacement of the seals will vary between plants, depending on individual operating practices and experience. The usual period ranges between 3 and 6 fuel cycles of operation.

Based upon consideration of the RCP seals as an active component of the pump, or upon consideration of their periodic replacement, the conclusion that the seals do not require an explicit aging management review remains valid.

The wording "a replaceable component" in Section 2.3.2.4 will be changed to "an active component which is subject to replacement based on performance."

99OG070.doc