Enclosure 1 to PLA-7399

List of Proposed Additional Changes to the Susquehanna Steam Electric Station Emergency Action Level Basis Document

List of the Proposed Changes to the SSES EAL Bases Document

Change to Section 3.1.1

Added language directly from the NSIR/DPR-ISG-01,"Interim Staff Guidance - EMERGENCY PLANNING FOR NUCLEAR POWER PLANTS, Rev. 0 (November 2011) Section IV.H - Emergency Declaration Timeliness at the end of Section 3.1.1 to provide complete classification timeliness guidance. This change was made since submittal of the March 19, 2015 license amendment request (Reference 1).

This change remains in compliance with NEI 99-01 Revision 6, Section 5.1 guidance and is a direct quote from the Interim Staff Guidance.

Change to EAL SS6.1 Bases and Wall Chart

The Heat Capacity Temperature Limit (HCTL) figure has been updated. The HCTL curves have been revised since submittal of the March 19, 2015 license amendment request.

This change remains in compliance with NEI 99-01 Revision 6, Section SS5 guidance since that guidance states that "[BWR] - Use the Heat Capacity Temperature Limit. This addresses the inability to remove heat via the main condenser and the suppression pool due to high pool water temperature." This change reflects the most up to date HCTL curves determined by SSES calculation EC-EOPC-1014, "EPG/SAG Revision 3 Appendix C Calculations," which are based on the BWROG Emergency Procedure Guidelines/Severe Accident Guidelines (EPG/SAG), Revision 3.

Change to EAL SU6.1 Bases

Added a sentence to clarify that the EAL is not applicable if a manual scram is initiated and no RPS setpoint is exceeded. This change was made since submittal of the March 19, 2015 license amendment request.

This change remains in compliance with NEI 99-01 Revision 6, Section SU5 guidance since the first condition is associated with an automatic scram (i.e., RPS setpoint exceeded) and that condition must be met in order for the EAL threshold to be met.

Change to Fission Product Barrier Threshold Matrix Primary Containment Loss Category E # 2, Table F-1 Bases and Wall Chart

Revised PC Loss # 2 for PC Integrity or Bypass that intentional Primary Containment venting can be initiated via various EP-DS or EO procedures and not just EP-DS-004. The SSES EP-DS and EO procedures have been revised since submittal of the March 19, 2015 license amendment request.

This change remains in compliance with NEI 99-01 Revision 6, Primary Containment Isolation Failure Loss 3.B. The guidance states "Intentional venting of primary containment for primary containment pressure or combustible gas control to the secondary containment and/or the environment is a Loss of the Containment." The change references the most up to date containment venting strategy.

Change to Fission Product Barrier Threshold Matrix Fuel Clad Loss on Reactor Vessel Level Bases

Revised the SAG entry required conditions to match what is stated in the two SSES SAG procedures. The SAG entry required conditions have been revised since submittal of the March 19, 2015 license amendment request.

This change remains in compliance with NEI 99-01 Revision 6, BWR Fuel Clad Barrier Threshold Loss 2.A. The specific SAG entry conditions are now listed in the SSES EAL Basis document.

Change to Fission Product Barrier Threshold Matrix RCS Potential Loss for RCS Leakage Bases

Relocated the phrase (EAL "trigger") and added the sentence "If it cannot be determined within 15 minutes of the EAL 'Trigger' that the leak is isolable and not the result of a condition previously described, the EAL shall be declared."

This change remains in compliance with NEI 99-01 Revision 6, RCS Leak Rate Potential Loss 3.A and the definition for UNISOLABLE. The changes are consistent with the March 19, 2015 license amendment request.

Change to Fission Product Barrier Threshold Matrix Primary Containment Potential Loss on Reactor Vessel Level Bases

Revised the SAG entry required conditions to match what is stated in the SSES SAG procedures. The changes have been made since submittal of the March 19, 2015 license amendment request.

This change remains in compliance with NEI 99-01 Revision 6, BWR RPV Water Level Potential Loss 2.A since these conditions indicate the need to exit from all EOPs and entry into the SAGs.

Change to Fission Product Barrier Threshold Matrix Primary Containment Loss for RCS Leakage Bases

- Relocated the phrase (EAL "trigger").
- Revised Max Safe language to align the Max Norm language with respect to EAL "trigger" and declaration requirements.
- Deleted the following sentences:

  "If subsequent actions taken to isolate the leak are successful, the threshold for this EAL is still met and must be declared. Once leakage is isolated, downgrading the emergency may be appropriate."

- Added the following sentence:

  "If subsequent actions taken to isolate the leak are successful within the 15 minute classification period, this EAL should not be declared."

This change remains in compliance with NEI 99-01 Revision 6, Primary Containment Isolation Failure Loss 3.C the definition for UNISOLABLE.

These changes have been made since the submittal of the March 19, 2015 license amendment request.

Change to Fission Product Barrier Threshold Matrix Primary Containment Potential Loss on Primary Containment Conditions Bases

Revised the procedure referenced in the bases that defines deflagration (Hydrogen and Oxygen) limits. The limits remain the same. Only the procedure that discusses what the limits are has changed since submittal of the March 19, 2015 license amendment request.

This change remains in compliance with NEI 99-01 Revision 6, Primary Containment Conditions Potential Loss 1.B since the referenced procedure (EP-DS-001) is a SAG and the deflagration limits remain "6% hydrogen and 5% oxygen in the drywell or suppression chamber."

Change to Fission Product Barrier Threshold Matrix Primary Containment Loss on Primary Containment Conditions Bases and Wall Chart

The Heat Capacity Temperature Limit (HCTL) figure has been updated. The HCTL curves have been revised since the submittal of the March 19, 2015 license amendment request.

This change remains in compliance with NEI 99-01 Revision 6, Primary Containment Conditions Potential Loss 1.C. The guidance states that "The HCTL is a function of RPV pressure, suppression pool temperature and suppression pool water level. It is utilized to preclude failure of the containment and equipment in the containment necessary for the safe shutdown of the plant and therefore, the inability to maintain plant parameters below the limit constitutes a potential loss of containment." This change also references the most up to date HCTL curves determined by SSES calculation EC-EOPC-1014.

Enclosure 2 to PLA-7399

Mark-up of Proposed Additional Changes Made to the SSES EAL Comparison Matrix (Revision 1)

Susquehanna Steam Electric Station
NEI 99-01 Revision 6
EAL Comparison Matrix

Revision ~~0~~ 1

Table of Contents

Introduction

This document provides a line-by-line comparison of the Initiating Conditions (ICs), Mode Applicability and Emergency Action Levels (EALs) in NEI 99-01 Rev. 6 Final, Development of Emergency Action Levels for Non-Passive Reactors, ADAMS Accession Number ML110240324, and the Susquehanna Steam Electric Station (SSES) ICs, Mode Applicability and EALs. This document provides a means of assessing SSES differences and deviations from the NRC endorsed guidance given in NEI 99-01. Discussion of SSES EAL bases and lists of source document references are given in the EAL Technical Bases Document. It is, therefore, advisable to reference the EAL Technical Bases Document for background information while using this document. **As shown in Table 3, SSES took no deviations from the generic NEI 99-01 Revision 6 guidance.**

Comparison Matrix Format

The ICs and EALs discussed in this document are grouped according to NEI 99-01 Recognition Categories. Within each Recognition Category, the ICs and EALs are listed in tabular format according to the order in which they are given in NEI 99-01. Generally, each row of the comparison matrix provides the following information:

- NEI EAL/IC identifier
- NEI EAL/IC wording
- SSES EAL/IC identifier
- SSES EAL/IC wording
- Description of any differences or deviations

EAL Emphasis Techniques

Due to the width of the table columns and table formatting constraints in this document, line breaks and indentation may differ slightly from the appearance of comparable wording in the source documents. NEI 99-01 is the source document for the NEI EALs; the SSES EAL Technical Bases Document for the SSES EALs.

The print and paragraph formatting conventions summarized below guide presentation of the SSES EALs in accordance with the EAL writing criteria. Space restrictions in the EAL table of this document sometimes override these criteria in cases when following the criteria would introduce undesirable complications in the EAL layout.

- Upper case-bold print is used for the logic terms **AND**, **OR** and **EITHER**.
- Bold font is used for certain logic terms, negative terms (**not**, **cannot**, etc.), **any**, **all**.
- Upper case print is reserved for defined terms, acronyms, system abbreviations, logic terms (and, or, etc. when not used as a conjunction), annunciator window engravings.
- Three or more items in a list are normally introduced with "**Any** of the following..." or "**All** of the following..." Items of the list begin with bullets when a priority or sequence is not inferred.
- The use of **AND/OR** logic within the same EAL has been avoided when possible. When such logic cannot be avoided, indentation and separation of subordinate contingent phrases is employed.

Global Differences

The differences listed below generally apply throughout the set of EALs and are not repeated in the Justification sections of this document. The global differences do not decrease the effectiveness of the intent of NEI 99-01.

1. The NEI phrase "Notification of Unusual Event" has been changed to "Unusual Event" or abbreviated "UE" to reduce EAL-user reading burden.
2. NEI 99-01 IC Example EALs are implemented in separate plant EALs to improve clarity and readability. For example, NEI lists all IC HU3 Example EALs under one IC. The corresponding SSES EALs appear as unique EALs (e.g., HU3.1 through HU3.4).
3. Mode applicability identifiers (numbers/letter) modify the NEI 99-01 mode applicability names as follows: 1 - Power Operation, 2 - Startup, 3 - Hot Shutdown, 4 - Cold Shutdown, 5 - Refueling, D - Defueled, and All. NEI 99-01 defines Defueled as follows: "Reactor Vessel contains no irradiated fuel (full core off-load during refueling or extended outage)."
4. NEI 99-01 uses the terms greater than, less than, greater than or equal to, etc. in the wording of some example EALs. For consistency

and to reduce EAL-user reading burden, SSES has adopted use of Boolean symbols in place of the NEI 99-01 text modifiers within the EAL wording.

5. "min." is the standard abbreviation for "minutes" and is used to reduce EAL user reading burden.

6. IC/EAL identification:

   - NEI Recognition Category A "Abnormal Radiation Levels/ Radiological Effluents" has been changed to Category R "Abnormal Rad Levels / Rad Effluent." The designator "R" is more intuitively associated with radiation (rad) or radiological events. NEI IC designators beginning with "A" have likewise been changed to "R."

   - NEI 99-01 defines the thresholds requiring emergency classification (example EALs) and assigns them to ICs which, in turn, are grouped in "Recognition Categories."

   - The SSES IC/EAL scheme includes the following features:

     a. Division of the NEI EAL set into three groups:

        - EALs applicable under <u>all</u> plant operating modes – This group would be reviewed by the EAL-user any time emergency classification is considered.

        - EALs applicable only under <u>hot</u> operating modes – This group would only be reviewed by the EAL-user when the plant is in Hot Shutdown, Startup or Power Operation mode.

        - EALs applicable only under <u>cold</u> operating modes – This group would only be reviewed by the EAL-user when the plant is in Cold Shutdown, Refueling or Defueled mode.

        The purpose of the groups is to avoid review of hot condition EALs when the plant is in a cold condition and avoid review of cold condition EALs when the plant is in a hot condition. This approach significantly minimizes the total number of EALs that must be reviewed by the EAL-user for a given plant condition, reduces EAL-user reading burden and, thereby, speeds identification of the EAL that applies to the emergency.

     b. Within each of the above three groups, assignment of EALs to categories/subcategories – Category and subcategory titles are selected to represent conditions that are operationally significant to the EAL-user. Subcategories are used as necessary to further divide the EALs of a category into logical sets of possible emergency classification thresholds. The SSES EAL categories/subcategories and their relationship to NEI Recognition Categories are listed in Table 1.

     c. Unique identification of each EAL – Four characters comprise the EAL identifier as illustrated in Figure 1.

Figure 1 – EAL Identifier

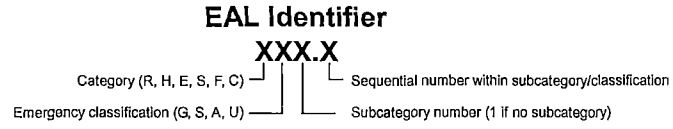

The first character is a letter associated with the category in which the EAL is located. The second character is a letter associated with the emergency classification level (G for General Emergency, S for Site Area Emergency, A for Alert, and U for Notification of Unusual Event). The third character is a number associated with one or more subcategories within a given category. Subcategories are sequentially numbered beginning with the number "1". If a category does not have a subcategory, this character is assigned the number "1". The fourth character is a number preceded by a period for each EAL within a subcategory. EALs are sequentially numbered within the emergency classification level of a subcategory beginning with the number "1".

The EAL identifier is designed to fulfill the following objectives:

- Uniqueness – The EAL identifier ensures that there can be no confusion over which EAL is driving the need for emergency classification.
- Speed in locating the EAL of concern – When the EALs are displayed in a matrix format, knowledge of the EAL identifier alone can lead the EAL-user to the location of the EAL within the classification matrix. The identifier conveys the category, subcategory and classification level. This assists ERO responders (who may not be in the same facility as the ED/RM) to find the EAL of concern in a timely manner without the need for a word description of the classification threshold.
- Possible classification upgrade – The category/subcategory/identifier scheme helps the EAL-user find higher emergency classification EALs that may become active if plant conditions worsen.

Table 2 lists the SSES ICs and EALs that correspond to the NEI ICs/Example EALs when the above EAL/IC organization and identification scheme is implemented.

Differences and Deviations

In accordance NRC Regulatory Issue Summary (RIS) 2003-18 "Use of Nuclear Energy Institute (NEI) 99-01, Methodology for Development of Emergency Action Levels" Supplements 1 and 2, a difference is an EAL change in which the basis scheme guidance differs in wording but agrees in meaning and intent, such that classification of an event would be the same, whether using the basis scheme guidance or the SSES EAL. A deviation is an EAL change in which the basis scheme guidance differs in wording and is altered in meaning or intent, such that classification of the event could be different between the basis scheme guidance and the SSES proposed EAL.

Administrative changes that do not actually change the textual content are neither differences nor deviations. Likewise, any format change that does not alter the wording of the IC or EAL is considered neither a difference nor a deviation.

The following are examples of differences:

- Choosing the applicable EAL based upon plant type (i.e., BWR vs. PWR).
- Using a numbering scheme other than that provided in NEI 99-01 that does not change the intent of the overall scheme.
- Where the NEI 99-01 guidance specifically provides an option to not include an EAL if equipment for the EAL does not exist at SSES (e.g., automatic real-time dose assessment capability).
- Pulling information from the bases section up to the actual EAL that does not change the intent of the EAL.
- Choosing to state ALL Operating Modes are applicable instead of stating N/A, or listing each mode individually under the Abnormal Rad Level/Radiological Effluent and Hazard and Other Conditions Affecting Plant Safety sections.
- Using synonymous wording (e.g., greater than or equal to vs. at or above, less than or equal vs. at or below, greater than or less than vs. above or below, etc.)
- Adding SSES equipment/instrument identification and/or noun names to EALs.
- Combining like ICs that are exactly the same but have different operating modes as long as the intent of each IC is maintained and the overall progression of the EAL scheme is not affected.
- Any change to the IC and/or EAL, and/or basis wording, as stated in NEI 99-01, that does not alter the intent of the IC and/or EAL, i.e., the IC and/or EAL continues to:
    - Classify at the correct classification level.
    - Logically integrate with other EALs in the EAL scheme.
    - Ensure that the resulting EAL scheme is complete (i.e., classifies all potential emergency conditions).

The following are examples of deviations:

- Use of altered mode applicability.
- Altering key words or time limits.
- Changing words of physical reference (protected area, safety-related equipment, etc.).

- Eliminating an IC. This includes the removal of an IC from the Fission Product Barrier Degradation category as this impacts the logic of Fission Product Barrier ICs.
- Changing a Fission Product Barrier from a Loss to a Potential Loss or vice-versa.
- Not using NEI 99-01definitions as the intent is for all NEI 99-01 users to have a standard set of defined terms as defined in NEI 99-01. Differences due to plant types are permissible (BWR or PWR). Verbatim compliance to the wording in NEI 99-01 is not necessary as long as the intent of the defined word is maintained. Use of the wording provided in NEI 99-01 is encouraged since the intent is for all users to have a standard set of defined terms as defined in NEI 99-01.
- Any change to the IC and/or EAL, and/or basis wording as stated in NEI 99-01 that does alter the intent of the IC and/or EAL, i.e., the IC and/or EAL:
    - Does not classify at the classification level consistent with NEI 99-01.
    - Is not logically integrated with other EALs in the EAL scheme.
    - Results in an incomplete EAL scheme (i.e., does not classify all potential emergency conditions).

The "Difference/Deviation Justification" columns in the remaining sections of this document identify each difference between the NEI 99-01 IC/EAL wording and the SSES IC/EAL wording. An explanation that justifies the reason for each difference is then provided. If the difference is determined to be a deviation, a statement is made to that affect and explanation is given that states why classification may be different from the NEI 99-01 IC/EAL and the reason for its acceptability. In all cases, however, the differences and deviations do not decrease the effectiveness of the intent of NEI 99-01. A summary list of SSES EAL deviations from NEI 99-01 is given in Table 3.

Table 1 – SSES EAL Categories/Subcategories

SSES EALs		NEI Recognition Category
Category	**Subcategory**	
Group: All Operating Mode:		
R – Abnormal Rad Levels/Rad Effluent	1 – Radiological Effluent 2 – Irradiated Fuel Event 3 – Area Radiation Levels	Abnormal **R**ad Levels/Radiological Effluent ICs/EALs
H – Hazards and Other Conditions Affecting Plant Safety	1 – Security 2 – Seismic Event 3 – Natural or Technological Hazard 4 – Fire 5 – Hazardous Gas 6 – Control Room Evacuation 7 – ED/RM Judgment	**H**azards and Other Conditions Affecting Plant Safety ICs/EALs
E - ISFSI	1 – Confinement Boundary	ISFSI ICs/EALs
Group: Hot Conditions:		
S –System Malfunction	1 – Loss of Essential AC Power 2 – Loss of Vital DC Power 3 – Loss of Control Room Indications 4 – RCS Activity 5 – RCS Leakage 6 – RPS Failure 7 – Loss of Communications 8 – Hazardous Event Affecting Safety Systems	**S**ystem Malfunction ICs/EALs
F – Fission Product Barrier Degradation	None	**F**ission Product Barrier ICs/EALs
Group: Cold Conditions:		
C – Cold Shutdown / Refueling System Malfunction	1 – RPV Level 2 – Loss of Essential AC Power 3 – RCS Temperature 4 – Loss of Vital DC Power 5 – Loss of Communications 6 – Hazardous Event Affecting Safety Systems	**C**old Shutdown./ Refueling System Malfunction ICs/EALs

Table 2 – NEI / SSES EAL Identification Cross-Reference

NEI		SSES	
IC	Example EAL	Category and Subcategory	EAL
AU1	1	R – Abnormal Rad Levels / Rad Effluent, 1 – Radiological Effluent	RU1.1
AU1	2	R – Abnormal Rad Levels / Rad Effluent, 1 – Radiological Effluent	RU1.1
AU1	3	R – Abnormal Rad Levels / Rad Effluent, 1 – Radiological Effluent	RU1.2
AU2	1	R – Abnormal Rad Levels / Rad Effluent, 2 – Irradiated Fuel Event	RU2.1
AA1	1	R – Abnormal Rad Levels / Rad Effluent, 1 – Radiological Effluent	RA1.1
AA1	2	R – Abnormal Rad Levels / Rad Effluent, 1 – Radiological Effluent	RA1.2
AA1	3	R – Abnormal Rad Levels / Rad Effluent, 1 – Radiological Effluent	RA1.3
AA1	4	R – Abnormal Rad Levels / Rad Effluent, 1 – Radiological Effluent	RA1.4
AA2	1	R – Abnormal Rad Levels / Rad Effluent, 2 – Irradiated Fuel Event	RA2.1
AA2	2	R – Abnormal Rad Levels / Rad Effluent, 2 – Irradiated Fuel Event	RA2.2
AA2	3	R – Abnormal Rad Levels / Rad Effluent, 2 – Irradiated Fuel Event	RA2.3
AA3	1	R – Abnormal Rad Levels / Rad Effluent, 3 – Area Radiation Levels	RA3.1
AA3	2	R – Abnormal Rad Levels / Rad Effluent, 3 – Area Radiation Levels	RA3.2
AS1	1	R – Abnormal Rad Levels / Rad Effluent, 1 – Radiological Effluent	RS1.1
AS1	2	R – Abnormal Rad Levels / Rad Effluent, 1 – Radiological Effluent	RS1.2
AS1	3	R – Abnormal Rad Levels / Rad Effluent, 1 – Radiological Effluent	RS1.3

NEI		SSES	
IC	**Example EAL**	**Category and Subcategory**	**EAL**
AS2	1	R – Abnormal Rad Levels / Rad Effluent, 2 – Irradiated Fuel Event	RS2.1
AG1	1	R – Abnormal Rad Levels / Rad Effluent, 1 – Radiological Effluent	RG1.1
AG1	2	R – Abnormal Rad Levels / Rad Effluent, 1 – Radiological Effluent	RG1.2
AG1	3	R – Abnormal Rad Levels / Rad Effluent, 1 – Radiological Effluent	RG1.3
AG2	1	R – Abnormal Rad Levels / Rad Effluent, 2 – Irradiated Fuel Event	RG2.1
CU1	1	C – Cold SD/ Refueling System Malfunction, 1 – RPV Level	CU1.1
CU1	2	C – Cold SD/ Refueling System Malfunction, 1 – RPV Level	CU1.2
CU2	1	C – Cold SD/ Refueling System Malfunction, 2 – Loss of Essential AC Power	CU2.1
CU3	1	C – Cold SD/ Refueling System Malfunction, 3 – RCS Temperature	CU4.1
CU3	2	C – Cold SD/ Refueling System Malfunction, 3 – RCS Temperature	CU4.2
CU4	1	C – Cold SD/ Refueling System Malfunction, 4 – Loss of Essential DC Power	CU3.1
CU5	1, 2, 3	C – Cold SD/ Refueling System Malfunction, 5 – Loss of Communications	CU5.1
CA1	1	C – Cold SD/ Refueling System Malfunction, 1 – RPV Level	CA1.1
CA1	2	C – Cold SD/ Refueling System Malfunction, 1 – RPV Level	CA1.2
CA2	1	C – Cold SD/ Refueling System Malfunction, 1 – Loss of Essential AC Power	CA2.1
CA3	1, 2	C – Cold SD/ Refueling System Malfunction, 3 – RCS Temperature	CA3.1
CA6	1	C – Cold SD/ Refueling System Malfunction, 6 – Hazardous Event Affecting Safety Systems	CA6.1
CS1	1	C – Cold SD/ Refueling System Malfunction, 1 – RPV Level	CS1.1

NEI		SSES	
IC	**Example EAL**	**Category and Subcategory**	**EAL**
CS1	2	C – Cold SD/ Refueling System Malfunction, 1 – RPV Level	CS1.2
CS1	3	C – Cold SD/ Refueling System Malfunction, 1 – RPV Level	CS1.3
CG1	1	C – Cold SD/ Refueling System Malfunction, 1 – RPV Level	CG1.1
CG1	2	C – Cold SD/ Refueling System Malfunction, 1 – RPV Level	CG1.2
E-HU1	1	E - ISFSI	EU1.1
FA1	1	F – Fission Product Barrier Degradation	FA1.1
FS1	1	F – Fission Product Barrier Degradation	FS1.1
FG1	1	F – Fission Product Barrier Degradation	FG1.1
HU1	1, 2, 3	H – Hazards and Other Conditions Affecting Plant Safety, 1 – Security	HU1.1
HU2	1	H – Hazards and Other Conditions Affecting Plant Safety, 2 – Seismic Event	HU2.1
HU3	1	H – Hazards and Other Conditions Affecting Plant Safety, 3 – Natural or Technological Hazard	HU3.1
HU3	2	H – Hazards and Other Conditions Affecting Plant Safety, 3 – Natural or Technological Hazard	HU3.2
HU3	3	H – Hazards and Other Conditions Affecting Plant Safety, 3 – Natural or Technological Hazard	HU3.3
HU3	4	H – Hazards and Other Conditions Affecting Plant Safety, 3 – Natural or Technological Hazard	HU3.4
HU3	5	N/A	N/A
HU4	1	H – Hazards and Other Conditions Affecting Plant Safety, 4 – Fire	HU4.1
HU4	2	H – Hazards and Other Conditions Affecting Plant Safety, 4 – Fire	HU4.2
HU4	3	H – Hazards and Other Conditions Affecting Plant Safety, 4 – Fire	HU4.3

NEI		SSES	
IC	Example EAL	Category and Subcategory	EAL
HU4	4	H – Hazards and Other Conditions Affecting Plant Safety, 4 – Fire	HU4.4
HU7	1	H – Hazards and Other Conditions Affecting Plant Safety, 7 – ED/RM Judgment	HU7.1
HA1	1, 2	H – Hazards and Other Conditions Affecting Plant Safety, 1 – Security	HA1.1
HA5	1	H – Hazards and Other Conditions Affecting Plant Safety, 5 – Hazardous Gas	HA5.1
HA6	1	H – Hazards and Other Conditions Affecting Plant Safety, 6 – Control Room Evacuation	HA6.1
HA7	1	H – Hazards and Other Conditions Affecting Plant Safety, 7 – ED/RM Judgment	HA7.1
HS1	1	H – Hazards and Other Conditions Affecting Plant Safety, 1 – Security	HS1.1
HS6	1	H – Hazards and Other Conditions Affecting Plant Safety, 6 – Control Room Evacuation	HS6.1
HS7	1	H – Hazards and Other Conditions Affecting Plant Safety, 7 – ED/RM Judgment	HS7.1
HG1	1	H – Hazards and Other Conditions Affecting Plant Safety, 1 – Security	HG1.1
HG7	1	H – Hazards and Other Conditions Affecting Plant Safety, 7 – ED/RM Judgment	HG7.1
SU1	1	S – System Malfunction, 1 – Loss of Essential AC Power	SU1.1
SU2	1	S – System Malfunction, 3 – Loss of Control Room Indications	SU3.1
SU3	1	S – System Malfunction, 4 – RCS Activity	SU4.1
SU3	2	S – System Malfunction, 4 – RCS Activity	SU4.2
SU4	1, 2, 3	S – System Malfunction, 5 – RCS Leakage	SU5.1
SU5	1	S – System Malfunction, 6 – RPS Failure	SU6.1
SU5	2	S – System Malfunction, 6 – RPS Failure	SU6.2

NEI		SSES	
IC	**Example EAL**	**Category and Subcategory**	**EAL**
SU6	1, 2, 3	S – System Malfunction, 7 –Loss of Communications	SU7.1
SU7	1, 2	N/A (PWR only)	N/A
SA1	1	S – System Malfunction, 1 – Loss of Essential AC Power	SA1.1
SA2	1	S – System Malfunction, 3 – Loss of Control Room Indications	SA3.1
SA5	1	S – System Malfunction, 6 – RPS Failure	SA6.1
SA9	1	S – System Malfunction, 8 – Hazardous Event Affecting Safety Systems	SA8.1
SS1	1	S – System Malfunction, 1 – Loss of Essential AC Power	SS1.1
SS5	1	S – System Malfunction, 6 – RPS Failure	SS6.1
SS8	1	S – System Malfunction, 2 – Loss of Essential DC Power	SS2.1
SG1	1	S – System Malfunction, 1 – Loss of Essential AC Power	SG1.1
SG8	2	S – System Malfunction, 1 – Loss of Essential AC Power	SG1.2

Table 3 – Summary of Deviations

NEI		SSES EAL	Description
IC	Example EAL		
None	None	N/A	N/A

Category R

Abnormal Rad Levels / Radiological Effluent

NEI IC#	NEI IC Wording and Mode Applicability	SSES IC#(s)	SSES IC Wording and Mode Applicability	Difference/Deviation Justification
AU1	Release of gaseous or liquid radioactivity greater than 2 times the (site-specific effluent release controlling document) limits for 60 minutes or longer. MODE: All	RU1	Release of gaseous or liquid radioactivity greater than 2 times the TRM limits for 60 minutes or longer. MODE: All	The SSES TRM is the site-specific effluent release controlling document.

NEI Ex. EAL #	NEI Example EAL Wording	SSES EAL #	SSES EAL Wording	Difference/Deviation Justification
1	Reading on **ANY** effluent radiation monitor greater than 2 times the (site-specific effluent release controlling document) limits for 60 minutes or longer: (site-specific monitor list and threshold values corresponding to 2 times the controlling document limits)	RU1.1	Gaseous or liquid effluent > Table R-1 column "UE" for ≥60 min. (Notes 1, 2, 3)	Example EALs #1 and #2 have been combined into a single EAL to simplify presentation. The NEI phrase "...effluent radiation monitor greater than 2 times the (site-specific effluent release controlling document)" and "effluent radiation monitor greater than 2 times the alarm setpoint established by a current radioactivity discharge permit " have been replaced with "...Gaseous or liquid effluent > Table R-1 column "UE" UE thresholds for all SSES continuously monitored gaseous and liquid release pathways are listed in Table R-1 to consolidate the information in a single location and, thereby, simplify identification of the thresholds by the EAL user. The values shown in Table R-1 column "UE", consistent with the NEI bases, represent two times the TRM release limits for both liquid and gaseous release.
2	Reading on **ANY** effluent radiation monitor greater than 2 times the alarm setpoint established by a current radioactivity discharge permit for 60 minutes or longer.			

NEI Ex. EAL #	NEI Example EAL Wording	SSES EAL #	SSES EAL Wording	Difference/Deviation Justification
3	Sample analysis for a gaseous or liquid release indicates a concentration or release rate greater than 2 times the (site-specific effluent release controlling document) limits for 60 minutes or longer.	RU1.2	Sample analysis for a gaseous or liquid release indicates a concentration or release rate > 2 x TRM limits for ≥ 60 min. (Notes 1, 2)	The SSES TRM is the site-specific effluent release controlling document.
Notes	• The Emergency Director should declare the Unusual Event promptly upon determining that 60 minutes has been exceeded, or will likely be exceeded. • If an ongoing release is detected and the release start time is unknown, assume that the release duration has exceeded 60 minutes. • If the effluent flow past an effluent monitor is known to have stopped due to actions to isolate the release path, then the effluent monitor reading is no longer valid for classification purposes.	N/A	Note 1: The ED/RM should declare the event promptly upon determining that time limit has been exceeded, or will likely be exceeded. Note 2: If an ongoing release is detected and the release start time is unknown, assume that the release duration has exceeded the specified time limit. Note 3: If the effluent flow past an effluent monitor is known to have stopped, indicating that the release path is isolated, the effluent monitor reading is no longer valid for classification purposes.	The classification timeliness note has been standardized across the SSES EAL scheme by referencing the "time limit" specified within the EAL wording. The classification timeliness note has been standardized across the SSES EAL scheme by referencing the "time limit" specified within the EAL wording. None

Table R-1Effluent Monitor Classification Thresholds (Note 4)						
	Release Point	Monitor	GE	SAE	Alert	UE
Gaseous	Plant Vent (noble gas)	0C630 0C677	1.9E+09 µCi/min (site total)	1.9E+08 µCi/min (site total)	1.9E+07 µCi/min (site total)	4.0E+06 µCi/min (site total)
Liquid	LRW	RR-06433	-----	----	-----	2 x hi alarm
	1(2) RHRSW A/B	RR-D12-1R606	-----	----	----	2 x hi alarm
	1(2) SW/SDHR	RR-D12-1R604	----	-----	-----	2 x hi alarm

NEI IC#	NEI IC Wording and Mode Applicability	SSES IC#(s)	SSES IC Wording and Mode Applicability	Difference/Deviation Justification
AU2	UNPLANNED loss of water level above irradiated fuel. MODE: All	RU2	Unplanned loss of water level above irradiated fuel MODE: All	None

NEI Ex. EAL #	NEI Example EAL Wording	SSES EAL #	SSES EAL Wording	Difference/Deviation Justification
1	a. UNPLANNED water level drop in the REFUELING PATHWAY as indicated by **ANY** of the following: (site-specific level indications). **AND** b. UNPLANNED rise in area radiation levels as indicated by **ANY** of the following radiation monitors. (site-specific list of area radiation monitors)	RU2.1	UNPLANNED water level drop in the REFUELING PATHWAY as indicated by **any** of the following on **EITHER** unit: • Fuel Pool Water Low Level alarm • Skimmer Surge Tank Low Level alarm • Visual observation of a water level drop below a fuel pool skimmer surge tank inlet • Observation of water draining down the outside wall of primary containment **AND** UNPLANNED rise in area radiation levels as indicated by **any** of the following radiation monitors: • Channel 14 Spent Fuel Pool Area Criticality Monitor • Channel 15 Refueling Floor Area • Channel 42 Refueling Floor Area	Site-specific level indications and area radiation monitors are listed in bullet format for clarification. Added "...on **EITHER** unit..." to clarify application to a multi-unit site.

NEI IC#	NEI IC Wording	SSES IC#(s)	SSES IC Wording	Difference/Deviation Justification
AA1	Release of gaseous or liquid radioactivity resulting in offsite dose greater than 10 mrem TEDE or 50 mrem thyroid CDE. MODE: All	RA1	Release of gaseous or liquid radioactivity resulting in offsite dose greater than 10 mrem TEDE or 50 mrem child thyroid CDE MODE: All	SSES utilizes child thyroid for dose assessments and protective action recommendations.

NEI Ex. EAL #	NEI Example EAL Wording	SSES EAL #	SSES EAL Wording	Difference/Deviation Justification
1	Reading on ANY of the following radiation monitors greater than the reading shown for 15 minutes or longer: (site-specific monitor list and threshold values)	RA1.1	Gaseous effluent > Table R-1 column "Alert" for ≥15 min. (Notes 1, 2, 3, 4)	The SSES radiation monitors that detect gaseous radioactivity effluent release to the environment are listed in Table R-1. UE, Alert, SAE and GE thresholds for all SSES continuously monitored gaseous release pathways are listed in Table R-1 to consolidate the information in a single location and, thereby, simplify identification of the thresholds by the EAL-user.
2	Dose assessment using actual meteorology indicates doses greater than 10 mrem TEDE or 50 mrem thyroid CDE at or beyond (site-specific dose receptor point).	RA1.2	Dose assessment using actual meteorology indicates doses > 10 mrem TEDE or 50 mrem child thyroid CDE at or beyond the EMERGENCY PLAN BOUNDARY (Notes 3, 4)	The EMERGENCY PLAN BOUNDARY is the site-specific receptor point.
3	Analysis of a liquid effluent sample indicates a concentration or release rate that would result in doses greater than 10 mrem TEDE or 50 mrem thyroid CDE at or beyond (site-specific dose receptor point) for one hour of exposure.	RA1.3	Analysis of a liquid effluent sample indicates a concentration or release rate that would result in doses > 10 mrem TEDE or 50 mrem child thyroid CDE at or beyond the EMERGENCY PLAN BOUNDARY for 60 min. of exposure (Notes 1, 2)	The EMERGENCY PLAN BOUNDARY is the site-specific receptor point. The alert classification for liquid releases must be declared based on RA1.3 by sample analysis per the TRM or applicable off normal procedure.

4	Field survey results indicate **EITHER** of the following at or beyond (site-specific dose receptor point): • Closed window dose rates greater than 10 mR/hr expected to continue for 60 minutes or longer. • Analyses of field survey samples indicate thyroid CDE greater than 50 mrem for one hour of inhalation.	RA1.4	Field survey results indicate **EITHER** of the following at or beyond the EMERGENCY PLAN BOUNDARY: • Closed window dose rates > 10 mR/hr expected to continue for ≥60 min. • Analyses of field survey samples indicate child thyroid CDE > 50 mrem for 60 min. of inhalation. (Notes 1, 2)	The EMERGENCY PLAN BOUNDARY is the site-specific receptor point.
Notes	• The Emergency Director should declare the Alert promptly upon determining that the applicable time has been exceeded, or will likely be exceeded. • If an ongoing release is detected and the release start time is unknown, assume that the release duration has exceeded 15 minutes. • If the effluent flow past an effluent monitor is known to have stopped due to actions to isolate the release path, then the effluent monitor reading is no longer valid for classification purposes. • The pre-calculated effluent monitor values presented in EAL #1 should be used for emergency classification assessments until the results	N/A	Note 1: The ED/RM should declare the event promptly upon determining that time limit has been exceeded, or will likely be exceeded. Note 2: If an ongoing release is detected and the release start time is unknown, assume that the release duration has exceeded the specified time limit. Note 3: If the effluent flow past an effluent monitor is known to have stopped, indicating that the release path is isolated, the effluent monitor reading is no longer valid for classification purposes. Note 4: The pre-calculated effluent monitor values presented in EALs RA1.1, RS1.1 and RG1.1 should be used for emergency classification assessments until the	The classification timeliness note has been standardized across the SSES EAL scheme by referencing the "time limit" specified within the EAL wording. The classification timeliness note has been standardized across the SSES EAL scheme by referencing the "time limit" specified within the EAL wording. None Incorporated site-specific EAL numbers associated with generic EAL#1.

	from a dose assessment using actual meteorology are available.		results from a dose assessment using actual meteorology are available.	

NEI IC#	NEI IC Wording	SSES IC#(s)	SSES IC Wording	Difference/Deviation Justification
AA2	Significant lowering of water level above, or damage to, irradiated fuel. MODE: All	RA2	Significant lowering of water level above, or damage to, irradiated fuel MODE: All	None

NEI Ex. EAL #	NEI Example EAL Wording	SSES EAL #	SSES EAL Wording	Difference/Deviation Justification
1	Uncovery of irradiated fuel in the REFUELING PATHWAY.	RA2.1	Uncovery of irradiated fuel in the REFUELING PATHWAY	None
2	Damage to irradiated fuel resulting in a release of radioactivity from the fuel as indicated by **ANY** of the following radiation monitors: (site-specific listing of radiation monitors, and the associated readings, setpoints and/or alarms)	RA2.2	Damage to irradiated fuel resulting in a release of radioactivity **AND** **Any** of the following radiation monitor indications: • Refuel Floor High Exhaust (> 18 mR/hr) • Refuel Floor Wall Exhaust (> 21 mR/hr) • Channel 14 Spent Fuel Pool Area Criticality Monitor (> 100 mR/hr) • Channel 15 Refueling Floor Area (> 80 mR/hr) • Channel 42 Refueling Floor Area (> 80 mR/hr) • Channel 47 (U1) / 44 (U2) Spent Fuel Pool Area Criticality Monitor (> 100	Deleted the NEI phrase "from the fuel" because it is redundant to the preceding phrase "irradiated fuel." Site-specific list of radiation monitors are listed in bullet format for clarification. Listed in bullet format for clarification.

			mR/hr) • Channel 49 Refueling Floor High Range Monitor (on scale)	
3	Lowering of spent fuel pool level to (site-specific Level 2 value). [*See Developer Notes*]	RA2.3	Lowering of spent fuel pool level to ≤ 10 ft. above the top of the spent fuel racks	Post-Fukushima order EA-12-051 required the installation of reliable SFP level indication capable of identifying normal level (Level 1), SFP level 10 ft. above the top of the fuel racks (Level 2 or el. 804'-4") and SFP level at the top of the fuel racks (Level 3 or el.794'-10" which for SSES is 6 inches above the top of the fuel racks). Each spent fuel pool is equipped with primary and backup guided wave radar probes to measure pool level. The range is continuous from the high pool level elevation (el. 817'-7") to the top of the spent fuel racks (0 inches or el. 794'-4")

NEI IC#	NEI IC Wording	SSES IC#(s)	SSES IC Wording	Difference/Deviation Justification
AA3	Radiation levels that impede access to equipment necessary for normal plant operations, cooldown or shutdown MODE: All	RA3	Radiation levels that IMPEDE access to equipment necessary for normal plant operations, cooldown or shutdown. MODE: All (except RA3.2 Mode 3 only)	RA3.2 mode applicability is Mode 3 only because the Mode dependent safe operation and shutdown areas are only applicable in Mode 3 per Attachment 3 of the bases document.

NEI Ex. EAL #	NEI Example EAL Wording	SSES EAL #	SSES EAL Wording	Difference/Deviation Justification
1	Dose rate greater than 15 mR/hr in **ANY** of the following areas: • Control Room • Central Alarm Station • (other site-specific areas/rooms)	RA3.1	Dose rates > 15 mR/hr in **any** of the following areas: • Main Control Room • Radwaste Control Room • Both the Central Alarm Station (CAS) and Secondary Alarm Station (SAS)	The Radwaste Control Room is another site-specific area requiring continuous occupancy at SSES. Central Alarm Station (CAS) and Secondary Alarm Station (SAS) are both included in this EAL because either security station can effectively permit access to areas required to assure safe plant operations.
2	An UNPLANNED event results in radiation levels that prohibit or impede access to any of the following plant rooms or areas: (site-specific list of plant rooms or areas with entry-related mode applicability identified)	RA3.2	An UNPLANNED event results in radiation levels that prohibit or IMPEDE access to **any** Table R-2 rooms or areas (Note 5)	The site-specific list of plant rooms or areas with entry-related mode applicability are listed in Table R-2 for clarification.
Note	If the equipment in the listed room or area was already inoperable or out-of-service before the event occurred, then no emergency classification is warranted.	N/A	Note 5 If the equipment in the listed area was already inoperable or out-of-service before the event occurred, then no emergency classification is warranted.	None

Table R-2 Safe Operation & Shutdown Areas			
Elevation	**Unit 1 Area(s) ****	**Unit 2 Area(s) ****	**Mode(s)**
670'	RB 27	RB 32	3,4,5
683'	RB 27, 28, 29	RB 32, 33, 34	3,4,5
703'	RB 28, 29	RB 33, 34	3,4,5
719'	RB 25, 29	RB 30, 34	3,4,5
749'	RB 25, 29	RB 32, 33	3,4,5

**** See Chart 1 for location of plant areas**

Chart 1- Plant Area Key Plan

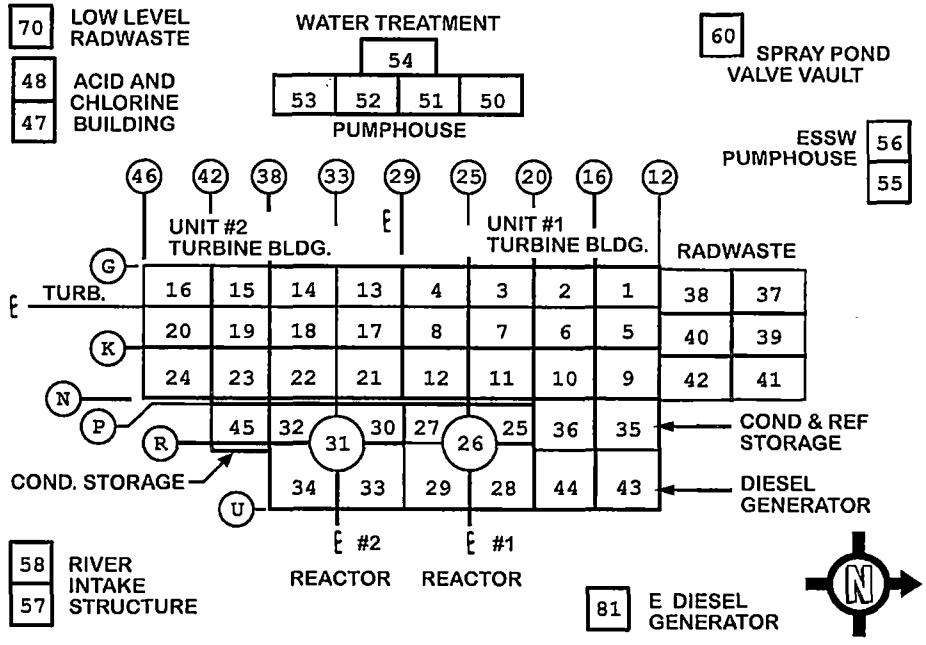

NEI IC#	NEI IC Wording	SSES IC#(s)	SSES IC Wording	Difference/Deviation Justification
AS1	Release of gaseous radioactivity resulting in offsite dose greater than 100 mrem TEDE or 500 mrem thyroid CDE MODE: All	RS1	Release of gaseous radioactivity resulting in offsite dose greater than 100 mrem TEDE or 500 mrem child thyroid CDE MODE: All	SSES utilizes child thyroid for dose assessments and protective action recommendations.

NEI Ex. EAL #	NEI Example EAL Wording	SSES EAL #	SSES EAL Wording	Difference/Deviation Justification
1	Reading on ANY of the following radiation monitors greater than the reading shown for 15 minutes or longer: (site-specific monitor list and threshold values)	RS1.1	Gaseous effluent > Table R-1 column "SAE" for ≥15 min. (Notes 1, 2, 3, 4)	The SSES radiation monitors that detect radioactivity effluent release to the environment are listed in Table R-1. UE, Alert, SAE and GE thresholds for all SSES continuously monitored gaseous release pathways are listed in Table R-1 to consolidate the information in a single location and, thereby, simplify identification of the thresholds by the EAL-user.
2	Dose assessment using actual meteorology indicates doses greater than 100 mrem TEDE or 500 mrem thyroid CDE at or beyond (site-specific dose receptor point)	RS1.2	Dose assessment using actual meteorology indicates doses > 100 mrem TEDE or 500 mrem child thyroid CDE at or beyond the EMERGENCY PLAN BOUNDARY (Notes 3, 4)	The EMERGENCY PLAN BOUNDARY is the site-specific receptor point.
3	Field survey results indicate **EITHER** of the following at or beyond (site-specific dose receptor point): • Closed window dose rates greater than 100 mR/hr expected to continue for 60 minutes or longer. • Analyses of field survey samples indicate thyroid CDE greater than 500	RS1.3	Field survey results indicate **EITHER** of the following at or beyond the EMERGENCY PLAN BOUNDARY: • Closed window dose rates > 100 mR/hr expected to continue for ≥60 min. • Analyses of field survey samples indicate child thyroid CDE > 500 mrem for 60 min. of inhalation.	The EMERGENCY PLAN BOUNDARY is the site-specific receptor point.

	mrem for one hour of inhalation.		(Notes 1, 2)	
Notes	• The Emergency Director should declare the Site Area Emergency promptly upon determining that the applicable time has been exceeded, or will likely be exceeded. • If an ongoing release is detected and the release start time is unknown, assume that the release duration has exceeded 15 minutes. • If the effluent flow past an effluent monitor is known to have stopped due to actions to isolate the release path, then the effluent monitor reading is no longer valid for classification purposes. • The pre-calculated effluent monitor values presented in EAL #1 should be used for emergency classification assessments until the results from a dose assessment using actual meteorology are available.		Note 1: The ED/RM should declare the event promptly upon determining that time limit has been exceeded, or will likely be exceeded. Note 2: If an ongoing release is detected and the release start time is unknown, assume that the release duration has exceeded the specified time limit. Note 3: If the effluent flow past an effluent monitor is known to have stopped, indicating that the release path is isolated, the effluent monitor reading is no longer valid for classification purposes. Note 4: The pre-calculated effluent monitor values presented in EALs RA1.1, RS1.1 and RG1.1 should be used for emergency classification assessments until the results from a dose assessment using actual meteorology are available.	The classification timeliness note has been standardized across the SSES EAL scheme by referencing the "time limit" specified within the EAL wording. The classification timeliness note has been standardized across the SSES EAL scheme by referencing the "time limit" specified within the EAL wording. None Incorporated site-specific EAL numbers associated with generic EAL#1.

NEI IC#	NEI IC Wording	SSES IC#(s)	SSES IC Wording	Difference/Deviation Justification
AS2	Spent fuel pool level at (site-specific Level 3 description) MODE: All	RS2	Spent fuel pool level at the top of the fuel racks	Top of the fuel racks is the site specific Level 3.

NEI Ex. EAL #	NEI Example EAL Wording	SSES EAL #	SSES EAL Wording	Difference/Deviation Justification
1	Lowering of spent fuel pool level to (site-specific Level 3 value)	RS2.1	Lowering of spent fuel pool level to ≤ 0.5 ft. above the top of the spent fuel racks	Post-Fukushima order EA-12-051 required the installation of reliable SFP level indication capable of identifying normal level (Level 1), SFP level 10 ft. above the top of the fuel racks (Level 2 or el. 804'-4") and SFP level at the top of the fuel racks (Level 3 or el.794'-10" which for SSES is 6 inches above the top of the fuel racks). Each spent fuel pool is equipped with primary and backup guided wave radar probes to measure pool level. The range is continuous from the high pool level elevation (el. 817'-7") to the top of the spent fuel racks (0 inches or el. 794'-4")

NEI IC#	NEI IC Wording	SSES IC#(s)	SSES IC Wording	Difference/Deviation Justification
AG1	Release of gaseous radioactivity resulting in offsite dose greater than 1,000 mrem TEDE or 5,000 mrem thyroid CDE. MODE: All	RG1	Release of gaseous radioactivity resulting in offsite dose greater than 1,000 mrem TEDE or 5,000 mrem child thyroid CDE MODE: All	SSES utilizes child thyroid for dose assessments and protective action recommendations.

NEI Ex. EAL #	NEI Example EAL Wording	SSES EAL #	SSES EAL Wording	Difference/Deviation Justification
1	Reading on ANY of the following radiation monitors greater than the reading shown for 15 minutes or longer: (site-specific monitor list and threshold values)	RG1.1	Gaseous effluent > Table R-1 column "GE" for ≥15 min. (Notes 1, 2, 3, 4)	The SSES radiation monitors that detect radioactivity effluent release to the environment are listed in Table R-1. UE, Alert, SAE and GE thresholds for all SSES continuously monitored gaseous release pathways are listed in Table R-1 to consolidate the information in a single location and, thereby, simplify identification of the thresholds by the EAL-user.
2	Dose assessment using actual meteorology indicates doses greater than 1,000 mrem TEDE or 5,000 mrem thyroid CDE at or beyond (site-specific dose receptor point).	RG1.2	Dose assessment using actual meteorology indicates doses > 1000 mrem TEDE or 5000 mrem child thyroid CDE at or beyond the EMERGENCY PLAN BOUNDARY (Notes 3, 4)	The EMERGENCY PLAN BOUNDARY is the site-specific receptor point.
3	Field survey results indicate **EITHER** of the following at or beyond (site-specific dose receptor point): • Closed window dose rates greater than 1,000 mR/hr expected to continue for 60 minutes or longer. • Analyses of field survey samples indicate thyroid CDE greater than 5,000 mrem for	RG1.3	Field survey results indicate **EITHER** of the following at or beyond the EMERGENCY PLAN BOUNDARY: • Closed window dose rates > 1000 mR/hr expected to continue for ≥60 min. • Analyses of field survey samples indicate child thyroid CDE > 5000 mrem for 60 min.	The EMERGENCY PLAN BOUNDARY is the site-specific receptor point.

	one hour of inhalation.		of inhalation. (Notes 1, 2)	
Notes	• The Emergency Director should declare the Site Area Emergency promptly upon determining that the applicable time has been exceeded, or will likely be exceeded.		Note 1: The ED/RM should declare the event promptly upon determining that time limit has been exceeded, or will likely be exceeded.	The classification timeliness note has been standardized across the SSES EAL scheme by referencing the "time limit" specified within the EAL wording.
	• If an ongoing release is detected and the release start time is unknown, assume that the release duration has exceeded 15 minutes.		Note 2: If an ongoing release is detected and the release start time is unknown, assume that the release duration has exceeded the specified time limit.	The classification timeliness note has been standardized across the SSES EAL scheme by referencing the "time limit" specified within the EAL wording.
	• If the effluent flow past an effluent monitor is known to have stopped due to actions to isolate the release path, then the effluent monitor reading is no longer valid for classification purposes.		Note 3: If the effluent flow past an effluent monitor is known to have stopped, indicating that the release path is isolated, the effluent monitor reading is no longer valid for classification purposes.	None
	• The pre-calculated effluent monitor values presented in EAL #1 should be used for emergency classification assessments until the results from a dose assessment using actual meteorology are available.		Note 5 The pre-calculated effluent monitor values presented in EALs RA1.1, RS1.1 and RG1.1 should be used for emergency classification assessments until the results from a dose assessment using actual meteorology are available.	Incorporated site-specific EAL numbers associated with generic EAL#1.

NEI IC#	NEI IC Wording	SSES IC#(s)	SSES IC Wording	Difference/Deviation Justification
AG2	Spent fuel pool level cannot be restored to at least (site-specific Level 3 description) for 60 minutes or longer MODE: All	RG2	Spent fuel pool level cannot be restored to at least the top of the fuel racks for 60 minutes or longer MODE: All	Top of the fuel racks is the site specific Level 3.

NEI Ex. EAL #	NEI Example EAL Wording	SSES EAL #	SSES EAL Wording	Difference/Deviation Justification
1	Spent fuel pool level cannot be restored to at least (site-specific Level 3 value) for 60 minutes or longer	RG2.1	Spent fuel pool level **CANNOT** BE RESTORED to at least 0.5 ft. above the top of the spent fuel racks for ≥60 min. (Note 1)	Post-Fukushima order EA-12-051 required the installation of reliable SFP level indication capable of identifying normal level (Level 1), SFP level 10 ft. above the top of the fuel racks (Level 2 or el. 804'-4") and SFP level at the top of the fuel racks (Level 3 or el.794'-10" which for SSES is 6 inches above the top of the fuel racks). Each spent fuel pool is equipped with primary and backup guided wave radar probes to measure pool level. The range is continuous from the high pool level elevation (el. 817'-7") to the top of the spent fuel racks (0 inches or el. 794'-4")
Note	The Emergency Director should declare the General Emergency promptly upon determining that 60 minutes has been exceeded, or will likely be exceeded.		Note 1: The ED/RM should declare the event promptly upon determining that time limit has been exceeded, or will likely be exceeded.	The classification timeliness note has been standardized across the SSES EAL scheme by referencing the "time limit" specified within the EAL wording.

Category C

Cold Shutdown / Refueling System Malfunction

NEI IC#	NEI IC Wording	SSES IC#(s)	SSES IC Wording	Difference/Deviation Justification
CU1	UNPLANNED loss of (reactor vessel/RCS [*PWR*] or RPV [*BWR*]) inventory for 15 minutes or longer. MODE: Cold Shutdown, Refueling	CU1	UNPLANNED loss of RPV inventory for 15 minutes or longer MODE: 4 - Cold Shutdown, 5 - Refueling	None

NEI Ex. EAL #	NEI Example EAL Wording	SSES EAL #	SSES EAL Wording	Difference/Deviation Justification
1	UNPLANNED loss of reactor coolant results in (reactor vessel/RCS [*PWR*] or RPV [*BWR*]) level less than a required lower limit for 15 minutes or longer.	CU1.1	UNPLANNED loss of reactor coolant results in RPV level less than a required lower limit for ≥15 min. (Note 1)	None
2	a. (Reactor vessel/RCS [*PWR*] or RPV [*BWR*]) level cannot be monitored. **AND** b. UNPLANNED increase in (site-specific sump and/or tank) levels.	CU1.2	RPV level cannot be monitored **AND** UNPLANNED increase in **any** Table C-1 sump or tank levels due to a loss of RPV inventory	Site-specific applicable sumps and tanks are listed in Table C-1 to improve the readability of the EAL. The phrase "due to a loss of RPV inventory" has been added to the SSES EAL for clarification. This wording implements the intent of the NEI EAL basis which states" "Sump and/or tank level changes must be evaluated against other potential sources of water flow to ensure they are indicative of leakage from the RCS." Although "Visual Observation" in Table C-1 is neither a sump nor tank, it is included in order to implement the intent of the NEI basis which states: "...operators may determine that an inventory loss is occurring by observing changes..."

Note	The Emergency Director should declare the Unusual Event promptly upon determining that 15 minutes has been exceeded, or will likely be exceeded.	N/A	Note 1: The ED/RM should declare the event promptly upon determining that time limit has been exceeded, or will likely be exceeded.	The classification timeliness note has been standardized across the SSES EAL scheme by referencing the "time limit" specified within the EAL wording.

Table C-1 Sumps & Tanks
• Drywell equipment drain tank • Drywell sumps • Reactor Building sump • LRW collection tanks • Main condenser hotwell • Suppression pool • Visual observation

NEI IC#	NEI IC Wording	SSES IC#(s)	SSES IC Wording	Difference/Deviation Justification
CU2	Loss of all but one AC power source to emergency buses for 15 minutes or longer. MODE: Cold Shutdown, Refueling, Defueled	CU2	Loss of **all** but one AC power source to essential buses for 15 minutes or longer. MODE: 4 - Cold Shutdown, 5 - Refueling, D - Defueled	"essential" is the site-specific designation for the SSES emergency AC buses.

NEI Ex. EAL #	NEI Example EAL Wording	SSES EAL #	SSES EAL Wording	Difference/Deviation Justification
1	a. AC power capability to (site-specific emergency buses) is reduced to a single power source for 15 minutes or longer. **AND** b. Any additional single power source failure will result in loss of all AC power to SAFETY SYSTEMS.	CU2.1	AC power capability to **all** 4.16 kV ESS buses on **EITHER** unit reduced to a single power source for ≥15 min. (Note 1) **AND** **Any** additional single power source failure will result in loss of **all** AC power to SAFETY SYSTEMS	ESS buses are the site-specific emergency buses. Added "...on **EITHER** unit..." to clarify application to a multi-unit site.
Note	The Emergency Director should declare the Unusual Event promptly upon determining that 15 minutes has been exceeded, or will likely be exceeded.	N/A	Note 1: The ED/RM should declare the event promptly upon determining that time limit has been exceeded, or will likely be exceeded.	The classification timeliness note has been standardized across the SSES EAL scheme by referencing the "time limit" specified within the EAL wording.

N/A	N/A	N/A	Note 10: Credit may be taken for one of the four CTGs as an onsite AC power source only if the CTG is already aligned and capable of powering an essential bus within 15 mi.	Added site specific note 10 to clarify that if a CTG is not already aligned at the time of the AC power loss credit cannot be taken for that CTG source because the time required to align a CTG to an essential bus exceeds 15 min.

NEI IC#	NEI IC Wording	SSES IC#(s)	SSES IC Wording	Difference/Deviation Justification
CU3	UNPLANNED increase in RCS temperature MODE: Cold Shutdown, Refueling	CU4	UNPLANNED increase in RCS temperature MODE: 4 - Cold Shutdown, 5 - Refueling	Reordered subcategory for loss of DC power to follow loss of AC power.

NEI Ex. EAL #	NEI Example EAL Wording	SSES EAL #	SSES EAL Wording	Difference/Deviation Justification
1	UNPLANNED increase in RCS temperature to greater than (site-specific Technical Specification cold shutdown temperature limit)	CU4.1	UNPLANNED increase in RCS temperature to > 200°F due to loss of decay heat removal capability	200°F is the site-specific Tech. Spec. cold shutdown temperature limit. Added the phrase "due to loss of decay heat removal capability" to clarify that the increase in temperature is related to such capability as specified in the generic bases.
2	Loss of **ALL** RCS temperature and (reactor vessel/RCS [*PWR*] or RPV [*BWR*]) level indication for 15 minutes or longer.	CU4.2	Loss of **all** RCS temperature and RPV level indication for ≥15 min. (Note 1)	None
Note	The Emergency Director should declare the Unusual Event promptly upon determining that 15 minutes has been exceeded, or will likely be exceeded	N/A	Note 1: The ED/RM should declare the event promptly upon determining that time limit has been exceeded, or will likely be exceeded.	The classification timeliness note has been standardized across the SSES EAL scheme by referencing the "time limit" specified within the EAL wording.

NEI IC#	NEI IC Wording	SSES IC#(s)	SSES IC Wording	Difference/Deviation Justification
CU4	Loss of Vital DC power for 15 minutes or longer. MODE: Cold Shutdown, Refueling	CU3	Loss of vital DC power for 15 minutes or longer. MODE: 5 - Cold Shutdown, 6 - Refueling	Reordered subcategory for loss of DC power to follow loss of AC power.

NEI Ex. EAL #	NEI Example EAL Wording	SSES EAL #	SSES EAL Wording	Difference/Deviation Justification
1	Indicated voltage is less than (site-specific bus voltage value) on required Vital DC buses for 15 minutes or longer.	CU3.1	< 105 VDC bus voltage indications on Technical Specification **required** 125 VDC buses on the affected unit for ≥ 15 min. (Note 1)	< 105 VDC is the site-specific minimum Vital DC bus design voltage. Clarified that the plant design of indicated voltage for the vital 125 VDC main distribution buses is local only. Local voltage indication is available for each bus based on dispatching a field operator in accordance with Control Room alarm response procedure AR-1(2)06-001 (A12,B12,C12,D12). Field observation of indicated voltage constitutes the point in time when availability of indications to plant operators that an emergency action level has been, or may be, exceeded.
Note	The Emergency Director should declare the Unusual Event promptly upon determining that 15 minutes has been exceeded, or will likely be exceeded.	N/A	Note 1:The ED/RM should declare the event promptly upon determining that time limit has been exceeded, or will likely be exceeded.	The classification timeliness note has been standardized across the SSES EAL scheme by referencing the "time limit" specified within the EAL wording.

NEI IC#	NEI IC Wording	SSES IC#(s)	SSES IC Wording	Difference/Deviation Justification
CU5	Loss of all onsite or offsite communications capabilities. MODE: Cold Shutdown, Refueling, Defueled	CU5	Loss of **all** onsite or offsite communications capabilities. MODE: 4- Cold Shutdown, 5 - Refueling, D - Defueled	None

NEI Ex. EAL #	NEI Example EAL Wording	SSES EAL #	SSES EAL Wording	Difference/Deviation Justification
1	Loss of **ALL** of the following onsite communication methods: (site specific list of communications methods)	CU5.1	Loss of **all** Table C-4 onsite communication methods **OR** Loss of **all** Table C-4 ORO communication methods **OR** Loss of **all** Table C-4 NRC communication methods	Example EALs #1, 2 and 3 have been combined into a single EAL for simplification of presentation. Table C-4 provides a site-specific list of onsite, ORO and NRC communications methods.
2	Loss of **ALL** of the following ORO communications methods: (site specific list of communications methods)			
3	Loss of **ALL** of the following NRC communications methods: (site specific list of communications methods)			

Table C-4 Communication Methods			
System	**Onsite**	**ORO**	**NRC**
UHF Radio	X		
Plant PA System	X		
Dedicated Conference Lines		X	
Commercial Telephone Systems	X	X	X
Cellular Telephone		X	X
FTS-2001 (ENS)		X	X

NEI IC#	NEI IC Wording	SSES IC#(s)	SSES IC Wording	Difference/Deviation Justification
CA1	Loss of (reactor vessel/RCS [*PWR*] or RPV [*BWR*]) inventory MODE: Cold Shutdown, Refueling	CA1	Loss of RPV inventory MODE: 4 - Cold Shutdown, 5 - Refueling	None

NEI Ex. EAL #	NEI Example EAL Wording	SSES EAL #	SSES EAL Wording	Difference/Deviation Justification
1	Loss of (reactor vessel/RCS [*PWR*] or RPV [*BWR*]) inventory as indicated by level less than (site-specific level).	CA1.1	Loss of RPV inventory as indicated by RPV level < -38 in. (Level 2)	-38 in is the site-specific level corresponding to the Level 2 trip setpoint.
2	a. (Reactor vessel/RCS [*PWR*] or RPV [*BWR*]) level cannot be monitored for 15 minutes or longer **AND** b. UNPLANNED increase in (site-specific sump and/or tank) levels due to a loss of (reactor vessel/RCS [*PWR*] or RPV [*BWR*]) inventory.	CA1.2	RPV level cannot be monitored for ≥15 min. (Note 1) **AND** UNPLANNED increase in **any** Table C-1 sump or tank levels due to a loss of RPV inventory	Site-specific applicable sumps and tanks are listed in Table C-1 to improve the readability of the EAL. Although "Visual Observation" in Table C-1 is neither a sump nor tank, it is included in order to implement the intent of the NEI basis which states: "...operators may determine that an inventory loss is occurring by observing changes..."
Note	The Emergency Director should declare the Alert promptly upon determining that 15 minutes has been exceeded, or will likely be exceeded	N/A	Note 1:The ED/RM should declare the event promptly upon determining that time limit has been exceeded, or will likely be exceeded.	The classification timeliness note has been standardized across the SSES EAL scheme by referencing the "time limit" specified within the EAL wording.

NEI IC#	NEI IC Wording	SSES IC#(s)	SSES IC Wording	Difference/Deviation Justification
CA2	Loss of all offsite and all onsite AC power to emergency buses for 15 minutes or longer MODE: Cold Shutdown, Refueling, Defueled	CA2	Loss of **all** offsite and **all** onsite AC power to essential buses for 15 minutes or longer. MODE: Cold Shutdown, Refueling, Defueled	"essential" is the site-specific designation for the SSES emergency AC buses.

NEI Ex. EAL #	NEI Example EAL Wording	SSES EAL #	SSES EAL Wording	Difference/Deviation Justification
1	Loss of **ALL** offsite and **ALL** onsite AC Power to (site-specific emergency buses) for 15 minutes or longer.	CA2.1	Loss of **all** offsite and **all** onsite AC power capability to **all** 4.16 kV ESS buses on **EITHER** unit for ≥15 min. (Note 1)	ESS buses are the site-specific emergency buses. Added the words "on **EITHER** unit" to clarify intent for a multi-unit site.
Note	The Emergency Director should declare the Unusual Event promptly upon determining that 15 minutes has been exceeded, or will likely be exceeded.	N/A	Note 1: The ED/RM should declare the event promptly upon determining that time limit has been exceeded, or will likely be exceeded.	The classification timeliness note has been standardized across the SSES EAL scheme by referencing the "time limit" specified within the EAL wording.

NEI IC#	NEI IC Wording	SSES IC#(s)	SSES IC Wording	Difference/Deviation Justification
CA3	Inability to maintain the plant in cold shutdown. MODE: Cold Shutdown, Refueling	CA4	Inability to maintain the plant in cold shutdown. MODE: 4 - Cold Shutdown, 5 - Refueling	Reordered subcategory for loss of DC power to follow loss of AC power.

NEI Ex. EAL #	NEI Example EAL Wording	SSES EAL #	SSES EAL Wording	Difference/Deviation Justification
1	UNPLANNED increase in RCS temperature to greater than (site-specific Technical Specification cold shutdown temperature limit) for greater than the duration specified in the following table.	CA4.1	UNPLANNED increase in RCS temperature to > 200°F for > Table C-3 duration (Note 1) **OR** UNPLANNED RPV pressure increase > 10 psig due to loss of decay heat removal capability	Example EALs #1 and #2 have been combined in one SSES EAL for simplification. 200°F is the site-specific Tech. Spec. cold shutdown temperature limit. Table C-3 is the site-specific implementation of the generic RCS Heat-up Duration Threshold table. 10 psig is the site-specific pressure increase readable by Control Room indications. Added "due to loss of decay heat removal capability" consistent with the generic bases wording.
2	UNPLANNED RCS pressure increase greater than (site-specific pressure reading). (This EAL does not apply during water-solid plant conditions. [*PWR*])			
Note	The Emergency Director should declare the Unusual Event promptly upon determining that 15 minutes has been exceeded, or will likely be exceeded.	N/A	Note 1: The ED/RM should declare the event promptly upon determining that time limit has been exceeded, or will likely be exceeded.	The classification timeliness note has been standardized across the SSES EAL scheme by referencing the "time limit" specified within the EAL wording.

Table: RCS Heat-up Duration Thresholds		
RCS Status	**Containment Closure Status**	**Heat-up Duration**
Intact (but not at reduced inventory [*PWR*])	Not applicable	60 minutes*
Not intact (or at reduced inventory [*PWR*])	Established	20 minutes*
	Not Established	0 minutes
* If an RCS heat removal system is in operation within this time frame and RCS temperature is being reduced, the EAL is not applicable.		

Table C-3 RCS Heat-up Duration Thresholds		
RCS Status	**Containment Closure Status**	**Heat-up Duration**
INTACT	N/A	60 min.*
Not INTACT	established	20 min.*
	not established	0 min.
* If an RCS heat removal system is in operation within this time frame and RCS temperature is being reduced, the EAL is **not** applicable.		

NEI IC#	NEI IC Wording	SSES IC#(s)	SSES IC Wording	Difference/Deviation Justification
CA6	Hazardous event affecting a SAFETY SYSTEM needed for the current operating mode. MODE: Cold Shutdown, Refueling	CA6	Hazardous event affecting a SAFETY SYSTEM needed for the current operating mode. MODE: 4 - Cold Shutdown, 5 - Refueling	None

NEI Ex. EAL #	NEI Example EAL Wording	SSES EAL #	SSES EAL Wording	Difference/Deviation Justification
1	a. The occurrence of **ANY** of the following hazardous events: • Seismic event (earthquake) • Internal or external flooding event • High winds or tornado strike • FIRE • EXPLOSION • (site-specific hazards) • Other events with similar hazard characteristics as determined by the Shift Manager **AND** b. **EITHER** of the following: 1. Event damage has caused indications of degraded performance in at least one train of a SAFETY SYSTEM needed for the current operating mode. **OR**	CA6.1	The occurrence of **any** Table C-5 hazardous event **AND** **EITHER:** Event damage has caused indications of degraded performance in at least one train of a SAFETY SYSTEM needed for the current operating mode **OR** The event has caused VISIBLE DAMAGE to a SAFETY SYSTEM component or structure needed for the current operating mode	The hazardous events have been listed in Table C-5 to improve the readability of the SSES EAL.

	2. The event has caused VISIBLE DAMAGE to a SAFETY SYSTEM component or structure needed for the current operating mode.			

Table C-5 Hazardous Events
• Seismic event (earthquake) • Internal or external FLOODING event • High winds or tornado strike • FIRE • EXPLOSION • Other events with similar hazard characteristics as determined by the Shift Manager

NEI IC#	NEI IC Wording	SSES IC#(s)	SSES IC Wording	Difference/Deviation Justification
CS1	Loss of (reactor vessel/RCS [*PWR*] or RPV [*BWR*]) inventory affecting core decay heat removal capability. MODE: Cold Shutdown, Refueling	CS1	Loss of RPV inventory affecting core decay heat removal capability MODE: 4 - Cold Shutdown, 5 - Refueling	None

NEI Ex. EAL #	NEI Example EAL Wording	SSES EAL #	SSES EAL Wording	Difference/Deviation Justification
1	a. CONTAINMENT CLOSURE not established. **AND** b. (Reactor vessel/RCS [*PWR*] or RPV [*BWR*]) level less than (site-specific level).	CS1.1	CONTAINMENT CLOSURE **not** established **AND** RPV level < -129 in. (Level 1)	-129 in. is the RPV water level that corresponds to the Level 1 trip setpoint.
2	a. CONTAINMENT CLOSURE established. **AND** b. (Reactor vessel/RCS [*PWR*] or RPV [*BWR*]) level less than (site-specific level).	CS1.2	CONTAINMENT CLOSURE established **AND** RPV level < -161 in. (TAF)	-161 in. is the RPV water level that corresponds to the top of active fuel.
3	a. (Reactor vessel/RCS [*PWR*] or RPV [*BWR*]) level cannot be monitored for 30 minutes or longer. **AND** b. Core uncovery is indicated by **ANY** of the following:	CS1.3	RPV level cannot be monitored for ≥30 min. (Note 1) **AND** UNPLANNED increase in **any** Table C-1 sump or tank level due to a loss of RPV inventory of sufficient magnitude to	Site-specific applicable sumps and tanks are listed in Table C-1 to improve readability of the EAL. Although "Visual Observation" in Table C-1 is neither a sump nor tank, it is included in order to implement the intent of the NEI basis which states: "...operators may determine that an inventory loss is occurring by observing changes..." The phrase "due to a loss of RPV inventory" has been added to the

	• (Site-specific radiation monitor) reading greater than (site-specific value) • Erratic source range monitor indication [*PWR*] • UNPLANNED increase in (site-specific sump and/or tank) levels of sufficient magnitude to indicate core uncovery • (Other site-specific indications)		indicate core uncovery	SSES EAL for clarification. This wording implements the intent of the NEI EAL basis which states "Sump and/or tank level changes must be evaluated against other potential sources of water flow to ensure they are indicative of leakage from the RCS." SSES does not have any installed or temporary area radiation monitors located in line of sight to the reactor cavity that can be used as an alternative indication of irradiate fuel uncovery in the RPV. No alternative site-specific level indications of core uncover exist at SSES. Because the SSES SRMs are located near the core mid-plane they are not a viable indicator of core uncover.
Note	The Emergency Director should declare the Site Area Emergency promptly upon determining that 30 minutes has been exceeded, or will likely be exceeded	N/A	Note 1: The ED/RM should declare the event promptly upon determining that time limit has been exceeded, or will likely be exceeded.	The classification timeliness note has been standardized across the SSES EAL scheme by referencing the "time limit" specified within the EAL wording.

NEI IC#	NEI IC Wording	SSES IC#(s)	SSES IC Wording	Difference/Deviation Justification
CG1	Loss of (reactor vessel/RCS [*PWR*] or RPV [*BWR*]) inventory affecting fuel clad integrity with containment challenged MODE: Cold Shutdown, Refueling	CG1	Loss of RPV inventory affecting fuel clad integrity with Containment challenged MODE: 4 - Cold Shutdown, 5 - Refueling	None

NEI Ex. EAL #	NEI Example EAL Wording	SSES EAL #	SSES EAL Wording	Difference/Deviation Justification
1	a. (Reactor vessel/RCS [*PWR*] or RPV [*BWR*]) level less than (site-specific level) for 30 minutes or longer. **AND** b. **ANY** indication from the Containment Challenge Table (see below).	CG1.1	RPV level < -161 in. (TAF) for ≥ 30 min. **AND** **Any** Containment Challenge indication, Table C-2	-161 in. is the RPV water level corresponding to the top of active fuel. The Containment Challenge Table is Table C-2. 6% hydrogen concentration in the presence of oxygen is the minimum necessary to support a hydrogen deflagration. The Max Safe Operating Radiation Levels are the highest value of these parameters at which neither: (1) equipment necessary for the safe shutdown of the plant will fail, nor (2) personnel access necessary for the safe shutdown of the plant will be precluded. These are the site-specific secondary containment radiation monitor readings and are listed in EOP-104. The Max Safe Operating Radiation Levels are restricted to only those that can be read within the Control Room to support prompt classification.
2	a. (Reactor vessel/RCS [*PWR*] or RPV [*BWR*]) level cannot be monitored for 30 minutes or longer. **AND** b. Core uncovery is indicated by	CG1.2	RPV level cannot be monitored for ≥30 min. (Note 1) **AND** UNPLANNED increase in **any** Table C-1 sump or tank level due to a loss of RPV inventory of	Site-specific applicable sumps and tanks are listed in Table C-1 to improve the readability of the EAL. The phrase "due to a loss of RPV inventory" has been added to the SSES EAL for clarification. This wording implements the intent of the NEI EAL basis which states" "Sump and/or tank level changes must be evaluated against other potential sources of water flow to ensure they are indicative of leakage from the RCS."

	ANY of the following: • (Site-specific radiation monitor) reading greater than (site-specific value) • Erratic source range monitor indication [*PWR*] • UNPLANNED increase in (site-specific sump and/or tank) levels of sufficient magnitude to indicate core uncovery • (Other site-specific indications) **AND** c. **ANY** indication from the Containment Challenge Table (see below).		sufficient magnitude to indicate core uncovery **AND** **Any** Containment Challenge indication, Table C-2	Although "Visual Observation" in Table C-1 is neither a sump nor tank, it is included in order to implement the intent of the NEI basis which states: "...operators may determine that an inventory loss is occurring by observing changes..." The Containment Challenge Table is Table C-2. SSES does not have any installed or temporary area radiation monitors located in line of sight to the reactor cavity that can be used as an alternative indication of irradiate fuel uncovery in the RPV. No alternative site-specific level indications of core uncover exist at SSES. Because the SSES SRMs are located near the core mid-plane they are not a viable indicator of core uncover.
Note	The Emergency Director should declare the General Emergency promptly upon determining that 30 minutes has been exceeded, or will likely be exceeded. N/A	N/A	Note 1: The ED/RM should declare the event promptly upon determining that time limit has been exceeded, or will likely be exceeded. Note 6: If CONTAINMENT CLOSURE is re-established prior to exceeding the 30-minute time limit, declaration of a General Emergency is **not** required.	The classification timeliness note has been standardized across the SSES EAL scheme by referencing the "time limit" specified within the EAL wording. Note 6 implements the asterisked note associated with the generic Containment Challenge table.

Containment Challenge Table
■ CONTAINMENT CLOSURE not established* ■ (Explosive mixture) exists inside containment ■ UNPLANNED increase in containment pressure ■ Secondary containment radiation monitor reading above (site-specific value) [*BWR*]

* If CONTAINMENT CLOSURE is re-established prior to exceeding the 30-minute time limit, then declaration of a General Emergency is not required.

Table C-2 Containment Challenge Indications
• CONTAINMENT CLOSURE **not** established (Note 6) • PC hydrogen concentration > 6% • UNPLANNED rise in PC pressure • Exceeding one or more Secondary Containment Control Max Safe Radiation Levels (EO-000-104 Table 9) that can be read in the Control Room (Table C-6)

Reference to EO-000-104 Table and Table C-6 have been added for clarification.

This Containment Challenge Indication threshold is limited to those Max Safe Reactor Building Radiation Limits that can be remotely determined from within the control room to support prompt classification.

Reference PPL letters to NRC:

SUSQUEHANNA STEAM ELECTRIC STATION REPLY TO A NOTICE OF VIOLATION PLA-7212 dated 08/29/2014

SUSQUEHANNA STEAM ELECTRIC STATION NOTIFICATION OF COMMITMENT CHANGE PLA-7264 dated 12/05/2014

Table C-6
Max Safe Reactor Building Radiation Limits

RB Area Elevation (ft)	ARM Number	ARM Channel Description	Max Safe Rad Limit (R/HR)
818	49	Refuel Floor Area	10
749	52 54	RWCU Recirc PP Access Fuel Pool PP Area	10
719	50 51	CRD North CRD South	10
670	53	Remote Shutdown Room	10
645	48 57 55 56	HPCI PP & Turbine Room RCIC PP & Turbine Room RHR A C PP Room RHR B D PP Room	10

Category D

Permanently Defueled Station Malfunction

NEI IC#	NEI IC Wording	SSES IC#(s)	SSES IC Wording	Difference/Deviation Justification
PD-AU1 PD-AU2 PD-SU1 PD-HU1 PD-HU2 PD-HU3 PD-AA1 PD-AA2 PD-HA1 PD-HA3	Recognition Category D Permanently Defueled Station	N/A	N/A	NEI Recognition Category PD ICs and EALs are applicable only to permanently defueled stations. SSES is not a defueled station.

Category E

Independent Spent Fuel Storage Installation (ISFSI)

NEI IC#	NEI IC Wording	SSES IC#(s)	SSES IC Wording	Difference/Deviation Justification
E-HU1	Damage to a loaded cask CONFINEMENT BOUNDARY MODE: All	EU1	Damage to a loaded cask CONFINEMENT BOUNDARY MODE: All	None

NEI Ex. EAL #	NEI Example EAL Wording	SSES EAL #	SSES EAL Wording	Difference/Deviation Justification
1	Damage to a loaded cask CONFINEMENT BOUNDARY as indicated by an on-contact radiation reading greater than (2 times the site-specific cask specific technical specification allowable radiation level) on the surface of the spent fuel cask.	EU1.1	Damage to a loaded canister confinement boundary as indicated by a radiation reading on a loaded spent fuel cask > **any** of the following: • 800 mrem/hr at 3 ft from the HSM surface • 200 mrem/hr on contact on the outside of the HSM door centerline • 40 mrem/hr on contact on the end shield wall exterior	The values shown represent 2 times the limits specified in the ISFSI Certificate of Compliance Technical Specification 1.2.7, HSM Dose Rates. Removed phrase" which is also used in Recognition Category A IC AU1" from bases since was confusing to end users.

Category F

Fission Product Barrier Degradation

NEI IC#	NEI IC Wording	SSES IC#(s)	SSES IC Wording	Difference/Deviation Justification
FA1	Any Loss or any Potential Loss of either the Fuel Clad or RCS barrier. MODE: Power Operation, Hot Standby, Startup, Hot Shutdown	FA1	**Any** loss or **any** potential loss of **EITHER** Fuel Clad or RCS MODE: 1 - Power Operation, 2 - Startup, 3 - Hot Shutdown	Deleted "Hot Standby" because BWRs do not have this operating mode.

NEI Ex. EAL #	NEI Example EAL Wording	SSES EAL #	SSES EAL Wording	Difference/Deviation Justification
1	Any Loss or any Potential Loss of either the Fuel Clad or RCS barrier.	FA1.1	**Any** loss or **any** potential loss of **EITHER** Fuel Clad or RCS barrier (Table F-1)	Table F-1 provides the fission product barrier loss and potential loss thresholds. Table F-2 provides a human factors enhancement mechanism to track the threshold conditions that define the Loss and Potential Loss of the three fission product barriers (Fuel Clad, Reactor Coolant System, and Containment) to assist with quickly determining which initiating condition for EALs FG1.1, FS1.1, or FA1.1 is met.

NEI IC#	NEI IC Wording	SSES IC#(s)	SSES IC Wording	Difference/Deviation Justification
FS1	Loss or Potential Loss of any two barriers MODE: Power Operation, Hot Standby, Startup, Hot Shutdown	FS1	Loss or potential loss of **any** two barriers MODE: 1 - Power Operation, 2 - Startup, 3 - Hot Shutdown	Deleted "Hot Standby" because BWRs do not have this operating mode.

NEI Ex. EAL #	NEI Example EAL Wording	SSES EAL #	SSES EAL Wording	Difference/Deviation Justification
1	Loss or Potential Loss of any two barriers	FS1.1	Loss or potential loss of **any** two barriers (Table F-1)	Table F-1 provides the fission product barrier loss and potential loss thresholds. Table F-2 provides a human factors enhancement mechanism to track the threshold conditions that define the Loss and Potential Loss of the three fission product barriers (Fuel Clad, Reactor Coolant System, and Containment) to assist with quickly determining which initiating condition for EALs FG1.1, FS1.1, or FA1.1 is met.

NEI IC#	NEI IC Wording	SSES IC#(s)	SSES IC Wording	Difference/Deviation Justification
FG1	Loss of any two barriers and Loss or Potential Loss of third barrier MODE: Power Operation, Hot Standby, Startup, Hot Shutdown	FG1	Loss of **any** two barriers and loss or potential loss of the third barrier MODE: 1 - Power Operation, 2 - Startup, 3 - Hot Shutdown	Deleted "Hot Standby" because BWRs do not have this operating mode.

NEI Ex. EAL #	NEI Example EAL Wording	SSES EAL #	SSES EAL Wording	Difference/Deviation Justification
1	Loss of any two barriers and Loss or Potential Loss of third barrier	FG1.1	Loss of **any** two barriers **AND** Loss or potential loss of the third barrier (Table F-1)	Table F-1 provides the fission product barrier loss and potential loss thresholds. Table F-2 provides a human factors enhancement mechanism to track the threshold conditions that define the Loss and Potential Loss of the three fission product barriers (Fuel Clad, Reactor Coolant System, and Containment) to assist with quickly determining which initiating condition for EALs FG1.1, FS1.1, or FA1.1 is met.

BWR Fuel Clad Fission Product Barrier Degradation Thresholds

NEI FPB#	NEI Threshold Wording	SSES FPB #(s)	SSES FPB Wording	Difference/Deviation Justification
FC Loss 1	**RCS Activity** A. (Site-specific indications that reactor coolant activity is greater than 300 µCi/gm dose equivalent I-131).	FC Loss D2	Primary coolant activity > 300 µCi/gm I-131 Dose Equivalent	300 µCi/gm DEI-131 is the site-specific indication for this reactor coolant activity. In the NEI 99-01 Bases, revised the lower value from 2% to 1% in the sentence "Reactor coolant activity above this level is greater than that expected for iodine spikes and corresponds to an approximate range of 1% to 5% fuel clad damage" to avoid confusion when interpreting the bases. 1% fuel clad damage has been calculated to correspond to 300 µCi/gm dose equivalent I-131 at SSES.
FC Loss 2	**RPV Water Level** A. Primary containment flooding required.	FC Loss A1	SAG~~s entered~~entry required	Revised to read "SAG~~s entered~~entry required." Requirements for Primary Containment Flooding correspond to entry into the Severe Accident Guidelines (SAGs) and are established in EOP RPV Control and EOP RPV Flooding. Per the developers guide "The phrase, "Primary containment flooding required," should be modified to agree with the site-specific EOP phrase indicating exit from all EOPs and entry to the SAGs (e.g., drywell flooding required, etc.)."
FC Loss 3	**Not Applicable** Not Applicable	N/A	N/A	N/A

NEI FPB#	NEI Threshold Wording	SSES FPB #(s)	SSES FPB Wording	Difference/Deviation Justification
FC Loss 4	**Primary Containment Radiation** A. Primary containment radiation monitor reading greater than (site-specific value).	FC Loss D1	CHRRM radiation > 3.0E+3 R/hr	For a fuel failure event equivalent to approximately 1% of cladding failure and an instantaneous and complete release of reactor coolant to the primary containment, the response of the CHRRM monitors in the drywell will be approximately 3,450 R/hr immediately after shutdown (rounded to 3,000 R/hr, which approximates the dose rate 10 minutes after shutdown). This assumes that the release has occurred soon after reactor shutdown, and that the fuel cladding failures produce a coolant source term of 300 µCi/gm of I-131 dose equivalent just prior to the release into primary containment. In the NEI 99-01 Bases, revised the lower value from 2% to 1% in the sentence "Reactor coolant activity above this level is greater than that expected for iodine spikes and corresponds to an approximate range of 1% to 5% fuel clad damage" to avoid confusion when interpreting the bases. 1% fuel clad damage has been calculated to correspond to 300 µCi/gm dose equivalent I-131 at SSES. Last sentence of NEI 99-01 Bases was changed to state – "There is no **Fuel Clad Barrier** Potential Loss threshold associated with Primary Containment Radiation." to eliminate confusion associated with PC – Potential Loss threshold for Primary Containment Radiation.
FC Loss 5	**Other Indications** A. (site-specific as applicable)	N/A	N/A	No other site-specific Fuel Clad Loss indication has been identified for SSES.
FC Loss 6	**Emergency Director Judgment** A. **ANY** condition in the opinion of the Emergency Director that indicates Loss of the Fuel Clad Barrier.	FC Loss F1	**Any** condition in the opinion of the Emergency Director/Recovery Manager that indicates loss of the fuel clad barrier	None

NEI FPB#	NEI Threshold Wording	SSES FPB #(s)	SSES FPB Wording	Difference/Deviation Justification
FC P-Loss 1	**RCS Activity** Not Applicable	N/A	N/A	N/A
FC P-Loss 2	**RPV Water Level** A. RPV water level cannot be restored and maintained above (site-specific RPV water level corresponding to the top of active fuel) or cannot be determined.	FC P-Loss A1	RPV level **CANNOT** BE RESTORED AND MAINTAINED > -161 in. or **CANNOT** be determined	-161 in. is the site-specific RPV water level corresponding to the top of active fuel.
FC P-Loss 3	**Not Applicable** Not Applicable	N/A	N/A	N/A
FC P-Loss 4	**Primary Containment Radiation** Not Applicable	N/A	N/A	N/A
FC P-Loss 5	**Other Indications** A. (site-specific as applicable)	N/A	N/A	No other site-specific Fuel Clad Potential Loss indication has been identified for SSES.
FC P-Loss 6	**Emergency Director Judgment** A. Any condition in the opinion of the Emergency Director that indicates Potential Loss of the Fuel Clad Barrier.	FC P-Loss F1	**Any** condition in the opinion of the Emergency Director/Recovery Manager that indicates potential loss of the fuel clad barrier	None

BWR RCS Fission Product Barrier Degradation Thresholds

NEI FPB#	NEI IC Wording	SSES FPB #(s)	SSES FPB Wording	Difference/Deviation Justification
RCS Loss 1	**Primary Containment Pressure** A. Primary containment pressure greater than (site-specific value) due to RCS leakage.	RCS Loss C1	Primary Containment pressure > 1.72 psig due to RCS leakage	1.72 psig is the site-specific primary containment pressure corresponding to the drywell high pressure scram and isolation setpoint.
RCS Loss 2	**RPV Water Level** A.RPV water level cannot be restored and maintained above (site-specific RPV water level corresponding to the top of active fuel) or cannot be determined.	RCS Loss A1	RPV level **CANNOT** BE RESTORED AND MAINTAINED > -161 in. or **CANNOT** be determined	-161 in. is the site-specific RPV water level corresponding to the top of active fuel.
RCS Loss 3	**RCS Leak Rate** A.UNISOLABLE break in ANY of the following: (site-specific systems with potential for high-energy line breaks) OR B.Emergency RPV Depressurization.	RCS Loss B1	UNISOLABLE break in **any** of the following: • Main Steam Line • HPCI Steam Line • RCIC Steam Line • RWCU • Feedwater	Main Steam Line, HPCI Steam Line, RCIC Steam Line, RWCU, and Feedwater are the site-specific systems with potential for high energy line breaks.
		RCS Loss B2	Emergency RPV Depressurization is required	Added "...is required" to be consistent with EOP terminology.

NEI FPB#	NEI IC Wording	SSES FPB #(s)	SSES FPB Wording	Difference/Deviation Justification
RCS Loss 4	**Primary Containment Radiation** A.Primary containment radiation monitor reading greater than (site-specific value).	RCS Loss D1	CHRRM radiation > 7.0E+0 R/hr with indication of a RCS leak inside the drywell	Indication of a RCS leak into the drywell is added to qualify the radiation monitor indication to avoid declaring the loss of the RCS barrier for situations where the radiation increase is not due to a primary system leak. For situations that involve failure of the Fuel Clad Barrier alone, containment Radiation levels would increase to greater than 30 R/hr potentially giving a false indication of a loss of the RCS barrier. Therefore the EAL contains a qualifier to preclude over classification of the event if only the fuel clad barrier has failed. Indication of a leak should be determined by observing other containment indications such as sump level, drywell pressure and ambient temperature. CHRRM readings of approximately 3 R/hr indicate an instantaneous release of reactor coolant at normal operating concentrations of I-131 to the drywell atmosphere. Adding this value to the normal CHRRM background readings of 3-4 R/hr (100% power normal operation) provides the value of 7 R/hr. Last sentence of NEI 99-01 Bases was changed to state – "There is no **RCS Barrier** Potential Loss threshold associated with Primary Containment Radiation." to eliminate confusion associated with PC – Potential Loss threshold for Primary Containment Radiation.
RCS Loss 5	**Other Indications** A. (site-specific as applicable)	N/A	N/A	No other site-specific RCS Loss indication has been identified for SSES.
RCS Loss 6	**Emergency Director Judgment** A. **ANY** condition in the opinion of the Emergency Director that indicates Loss of the RCS Barrier.	RCS Loss F1	**Any** condition in the opinion of the Emergency Director/Recovery Manager that indicates loss of the RCS barrier	None

NEI FPB#	NEI IC Wording	SSES FPB #(s)	SSES FPB Wording	Difference/Deviation Justification
RCS P-Loss 1	**Primary Containment Pressure** Not Applicable	N/A	N/A	N/A
RCS P-Loss 2	**RPV Water Level** Not Applicable	N/A	N/A	N/A
RCS P-Loss 3	**RCS Leak Rate** A.UNISOLABLE primary system leakage that results in exceeding **EITHER** of the following: 1.Max Normal Operating Temperature OR 2.Max Normal Operating Area Radiation Level.	RCS P-Loss B1	UNISOLABLE primary system leakage that results in exceeding **EITHER** of the following: • One or more Max Normal Reactor Building Radiation Limits (EO-000-104 Table 9) that can be read in the control room (Table F-3) **OR** • One or more Max Normal Reactor Building Area Temperature Limits (EO-000-104 Table 8) that can be read in the control room (Table F-4)	Reference to EO-000-104 Tables 8 and 9 and Table F-3 and F-4 have been added for clarification. This RCS Potential Loss threshold is limited to those Max Normal Reactor Building Radiation and Temperature Limits that can be remotely determined from within the control room to support prompt classification. Reference PPL letters to NRC: SUSQUEHANNA STEAM ELECTRIC STATION REPLY TO A NOTICE OF VIOLATION PLA-7212 dated 08/29/2014 SUSQUEHANNA STEAM ELECTRIC STATION NOTIFICATION OF COMMITMENT CHANGE PLA-7264 dated 12/05/2014
RCS P-Loss 4	**Primary Containment Radiation** Not Applicable	N/A	N/A	N/A
RCS P-Loss 5	**Other Indications** A. (site-specific as applicable)	N/A	N/A	No other site-specific RCS Potential Loss indication has been identified for SSES.

NEI FPB#	NEI IC Wording	SSES FPB #(s)	SSES FPB Wording	Difference/Deviation Justification
RCS P-Loss 6	**Emergency Director Judgment** A. **ANY** condition in the opinion of the Emergency Director that indicates Potential Loss of the RCS Barrier.	RCS P-Loss F1	**Any** condition in the opinion of the Emergency Director/Recovery Manager that indicates potential loss of the RCS barrier	None

BWR Containment Fission Product Barrier Degradation Thresholds

NEI FPB#	NEI IC Wording	SSES FPB #(s)	SSES FPB Wording	Difference/Deviation Justification
PC Loss 1	**Primary Containment Conditions** A. UNPLANNED rapid drop in primary containment pressure following primary containment pressure rise OR B. Primary containment pressure response not consistent with LOCA conditions.	PC Loss C1	UNPLANNED rapid drop in Primary Containment pressure following Primary Containment pressure rise	NEI PC Loss 1 has been split into two thresholds.
		PC Loss C2	Primary Containment pressure response **not** consistent with LOCA conditions	NEI PC Loss 1 has been split into two thresholds.
PC Loss 2	**RPV Water Level** Not Applicable	N/A	N/A	N/A
PC Loss 3	**Primary Containment Isolation Failure** A. UNISOLABLE direct downstream pathway to the environment exists after	PC Loss E1	UNISOLABLE direct downstream pathway to the environment exists after Primary Containment isolation signal	NEI PC Loss 3 has been split into two thresholds.

NEI FPB#	NEI IC Wording	SSES FPB #(s)	SSES FPB Wording	Difference/Deviation Justification
	primary containment isolation signal OR B. Intentional primary containment venting per EOPs OR C. UNISOLABLE primary system leakage that results in exceeding **EITHER** of the following: 1. Max Safe Operating Temperature. OR 2. Max Safe Operating Area Radiation Level.	PC Loss E2	Intentional Primary Containment venting per EP-DS-~~004 RPV and PC Venting~~procedures OR EO procedures	NEI PC Loss 3 has been split into two thresholds. ~~EP-DS-004 RPV and PC Venting provides~~ Various ~~EP-DS and EO procedures provide~~ the guidance for PC venting.
		PC Loss B1	UNISOLABLE primary system leakage that results in exceeding **EITHER** of the following: • One or more Max Safe Reactor Building Radiation Limits (EO-000-104 Table 9) that can be read in the control room (Table F-5) **OR** • One or more Max Safe Reactor Building area temperature Limits (EO-000-104 Table 8) that can be read in the control room (Table F-6)	Reference to EO-000-104 Tables 8 and 9 and Table F-5 and F-6 have been added for clarification. This RCS Potential Loss threshold is limited to those Max Safe Reactor Building Radiation and Temperature Limits that can be remotely determined from within the control room to support prompt classification. Reference PPL letters to NRC: SUSQUEHANNA STEAM ELECTRIC STATION REPLY TO A NOTICE OF VIOLATION PLA-7212 dated 08/29/2014 SUSQUEHANNA STEAM ELECTRIC STATION NOTIFICATION OF COMMITMENT CHANGE PLA-7264 dated 12/05/2014
PC Loss 4	**Primary Containment Radiation** Not Applicable	N/A	N/A	N/A
PC Loss 5	**Other Indications** A. (site-specific as applicable)	N/A	N/A	No other site-specific Containment Loss indication has been identified for SSES.
PC Loss 6	**Emergency Director Judgment** **ANY** condition in the opinion of the Emergency Director that indicates Loss of the Containment Barrier.	PC Loss F1	**Any** condition in the opinion of the Emergency Director/Recovery Manager that indicates loss of the Primary Containment barrier	None

NEI FPB#	NEI IC Wording	SSES FPB #(s)	SSES FPB Wording	Difference/Deviation Justification
PC P-Loss 1	**Primary Containment Conditions** A. Primary containment pressure greater than (site-specific value) OR B. (site-specific explosive mixture) exists inside primary containment OR C. HCTL exceeded.	PC P-Loss C1	Primary Containment pressure > 53 psig	NEI PC Pot. Loss 1 has been split into three thresholds. 53 psig is the maximum SSES containment pressure allowed by design.
		PC P-Loss C2	Deflagration concentrations exist inside PC (H_2 ≥6% **AND** O_2 ≥5%)	NEI PC Pot. Loss 1 has been split into three thresholds. The minimum global deflagration hydrogen/oxygen concentrations are 6% and 5%, respectively
		PC P-Loss C3	Heat Capacity Temperature Limit (Figure - HCTL) exceeded	NEI PC Pot. Loss 1 has been split into three thresholds.
PC P-Loss 2	**RPV Water Level** A. Primary containment flooding required.	PC P-Loss A1	SAG~~s entered~~entry required	Revised to read "SAG~~s entered~~entry required." Requirements for Primary Containment Flooding correspond to entry into the Severe Accident Guidelines (SAGs) and are established in EOP RPV Control and EOP RPV Flooding. Per the developers guide "The phrase, "Primary containment flooding required," should be modified to agree with the site-specific EOP phrase indicating exit from all EOPs and entry to the SAGs (e.g., drywell flooding required, etc.)."
PC P-Loss 3	**Primary Containment Isolation Failure** Not Applicable	N/A	N/A	N/A
PC P-Loss 4	**Primary Containment Radiation** A. Primary containment radiation monitor reading greater than (site-specific value).	PC P-Loss D1	CHRRM radiation > 4.0E+4 R/hr	A reading of 40,000 R/hr indicates the release of reactor coolant into the drywell with elevated activity indicative of 20% fuel clad damage.

NEI FPB#	NEI IC Wording	SSES FPB #(s)	SSES FPB Wording	Difference/Deviation Justification
PC P-Loss 5	**Other Indications** A. (site-specific as applicable)	N/A	N/A	No other site-specific Containment Potential Loss indication has been identified for SSES.
PC P-Loss 6	**Emergency Director Judgment** A. **ANY** condition in the opinion of the Emergency Director that indicates Potential Loss of the Containment Barrier.	PC P-Loss 6A	**Any** condition in the opinion of the Emergency Director/Recovery Manager that indicates potential loss of the Primary Containment barrier	None

Category H

Hazards and Other Conditions Affecting Plant Safety

NEI IC#	NEI IC Wording	SSES IC#(s)	SSES IC Wording	Difference/Deviation Justification
HU1	Confirmed SECURITY CONDITION or threat MODE: All	HU1	Confirmed SECURITY CONDITION or threat. MODE: All	None

NEI Ex. EAL #	NEI Example EAL Wording	SSES EAL #	SSES EAL Wording	Difference/Deviation Justification
1	A SECURITY CONDITION that does not involve a HOSTILE ACTION as reported by the (site-specific security shift supervision).	HU1.1	A SECURITY CONDITION that does not involve a HOSTILE ACTION as reported by Security Shift Supervision **OR** Notification of a credible security threat directed at the site **OR** A validated notification from the NRC providing information of an aircraft threat	Example EALs #1, 2 and 3 have been combined into a single EAL for ease of presentation and use.
2	Notification of a credible security threat directed at the site.			
3	A validated notification from the NRC providing information of an aircraft threat.			

NEI IC#	NEI IC Wording	SSES IC#(s)	SSES IC Wording	Difference/Deviation Justification
HU2	Seismic event greater than OBE levels MODE: All	HU2	Seismic event greater than OBE levels MODE: All	None

NEI Ex. EAL #	NEI Example EAL Wording	SSES EAL #	SSES EAL Wording	Difference/Deviation Justification
1	Seismic event greater than Operating Basis Earthquake (OBE) as indicated by: (site-specific indication that a seismic event met or exceeded OBE limits)	HU2.1	Seismic event greater than OPERATING BASIS EARTHQUAKE (OBE) as indicated by seismic instrumentation in the Control Room recording level greater than an OBE.	Ground motion acceleration of 0.05g is the Operating Basis Earthquake for Susquehanna. Earthquake Monitoring Panel 0C696 provides indication of strong motion, OBE, or SSE events for the Unit 1 Containment Foundation, Unit 2 Containment Foundation, and the ESW Pumphouse (as well as tape printout). Input from all six channels are recorded when a trigger initiates the system. A seismic event generally starts with an indication in the Control Room, Annunciator SEISMIC MON SYSTEM TRIGGERED (AR-016-G06) on 0C653. The OBE is signaled by an LED illuminated green on the upper panel adjacent to the label, OPERATING BASIS EARTHQUAKE.

NEI IC#	NEI IC Wording	SSES IC#(s)	SSES IC Wording	Difference/Deviation Justification
HU3	Hazardous event. MODE: All	HU3	Hazardous event MODE: All	None

NEI Ex. EAL #	NEI Example EAL Wording	SSES EAL #	SSES EAL Wording	Difference/Deviation Justification
1	A tornado strike within the PROTECTED AREA.	HU3.1	A tornado strike within the PROTECTED AREA	None
2	Internal room or area flooding of a magnitude sufficient to require manual or automatic electrical isolation of a SAFETY SYSTEM component needed for the current operating mode.	HU3.2	Internal room or area FLOODING of a magnitude sufficient to require manual or automatic electrical isolation of a SAFETY SYSTEM component needed for the current operating mode	None
3	Movement of personnel within the PROTECTED AREA is impeded due to an offsite event involving hazardous materials (e.g., an offsite chemical spill or toxic gas release).	HU3.3	Movement of personnel within the PROTECTED AREA is IMPEDED due to an offsite event involving hazardous materials (e.g., an offsite chemical spill or toxic gas release)	None
4	A hazardous event that results in on-site conditions sufficient to prohibit the plant staff from accessing the site via personal vehicles.	HU3.4	A hazardous event that results in on-site conditions sufficient to prohibit the plant staff from accessing the site via personal vehicles (Note 7)	Added reference to Note 7.
5	(Site-specific list of natural or technological hazard events)	N/A	N/A	No other site-specific hazard has been identified for SSES.
Note	EAL #3 does not apply to routine	N/A	Note 7: This EAL does **not**	The SSES note is intended to apply to generic example EAL #4, not

	traffic impediments such as fog, snow, ice, or vehicle breakdowns or accidents.		apply to routine traffic impediments such as fog, snow, ice, or vehicle breakdowns or accidents.	#3 as specified in the generic guidance.

NEI IC#	NEI IC Wording	SSES IC#(s)	SSES IC Wording	Difference/Deviation Justification
HU4	FIRE potentially degrading the level of safety of the plant. MODE: All	HU4	FIRE potentially degrading the level of safety of the plant MODE: All	None

NEI Ex. EAL #	NEI Example EAL Wording	SSES EAL #	SSES EAL Wording	Difference/Deviation Justification
1	a.A FIRE is NOT extinguished within 15-minutes of **ANY** of the following FIRE detection indications: • Report from the field (i.e., visual observation) • Receipt of multiple (more than 1) fire alarms or indications • Field verification of a single fire alarm **AND** b.The FIRE is located within **ANY** of the following plant rooms or areas: (site-specific list of plant rooms or areas)	HU4.1	A FIRE is **not** extinguished within 15 min. of **any** of the following FIRE detection indications (Note 1): • Report from the field (i.e., visual observation) • Receipt of multiple (more than 1) fire alarms or indications • Field verification of a single fire alarm **AND** The FIRE is located within **any** Table H-1 area	Site-specific plant rooms and areas are listed in Table H-1 to improve the readability of the EAL. The NEI 99-01 bases was clarified to read in part: Upon receipt, operators will take prompt actions to confirm the validity of an initial fire alarm, indication, or report. For EAL assessment purposes, the knowledge that a fires exists starts at the time of a report from the field, receipt of multiple fire detection alarms or indications, or field confirmation of a single alarm or indication. The fire duration clock starts at the time of knowledge that a fire exists. The original language "Upon receipt, operators will take prompt actions to confirm the validity of an initial fire alarm, indication, or report. For EAL assessment purposes, the emergency declaration clock starts at the time that the initial alarm, indication, or report was received, and not the time that a subsequent verification action was performed. Similarly, the fire duration clock also starts at the time of receipt of the initial alarm, indication or report" could be interpreted to preclude the need to have the distinction of "receipt of multiple (more than 1) fire alarms or indications" and "field verification of a single fire alarm" in the EAL. It would also preclude the need for HU4.2 in its entirety.

2	a.Receipt of a single fire alarm (i.e., no other indications of a FIRE). **AND** b.The FIRE is located within **ANY** of the following plant rooms or areas: (site-specific list of plant rooms or areas) **AND** c.The existence of a FIRE is not verified within 30-minutes of alarm receipt.	HU4.2	Receipt of a single fire alarm (i.e., no other indications of a FIRE) **AND** The fire alarm is indicating a FIRE within **any** Table H-1 area **AND** The existence of a FIRE is **not** verified (i.e., proved or disproved) within 30 min. of alarm receipt (Note 1)	Site-specific plant rooms and areas are listed in Table H-1 to improve the readability of the EAL. Added the phrase (i.e., proved or disproved) to eliminate the possibility of misinterpretation. Phrase is directly from the NEI 99-01 Bases for this EAL.
3	A FIRE within the plant *or ISFSI [for plants with an ISFSI outside the plant Protected Area]* PROTECTED AREA not extinguished within 60-minutes of the initial report, alarm or indication.	HU4.3	A FIRE within the plant PROTECTED AREA **not** extinguished within 60 min. of the initial report, alarm or indication (Note 1)	SSES does not have an ISFSI located outside the plant Protected Area.
4	A FIRE within the plant *or ISFSI [for plants with an ISFSI outside the plant Protected Area]* PROTECTED AREA that requires firefighting support by an offsite fire response agency to extinguish.	HU4.4	A FIRE within the plant PROTECTED AREA that requires firefighting support by an offsite fire response agency to extinguish	SSES does not have an ISFSI located outside the plant Protected Area.
Note	**Note:**The Emergency Director should declare the Unusual Event promptly upon determining that the applicable time has been exceeded, or will likely be exceeded.	N/A	Note 1:The ED/RM should declare the event promptly upon determining that time limit has been exceeded, or will likely be exceeded.	The classification timeliness note has been standardized across the SSES EAL scheme by referencing the "time limit" specified within the EAL wording.

Table H-1 Fire Areas
• Control Structure • Diesel Generator Buildings • ESSW Pump House • Reactor Buildings • Turbine Buildings • ISFSI

NEI IC#	NEI IC Wording	SSES IC#(s)	SSES IC Wording	Difference/Deviation Justification
HU7	Other conditions exist which in the judgment of the Emergency Director warrant declaration of a (NO)UE MODE: All	HU7	Other conditions existing that in the judgment of the ED/RM warrant declaration of a UE MODE: All	None

NEI Ex. EAL #	NEI Example EAL Wording	SSES EAL #	SSES EAL Wording	Difference/Deviation Justification
1	Other conditions exist which in the judgment of the Emergency Director indicate that events are in progress or have occurred which indicate a potential degradation of the level of safety of the plant or indicate a security threat to facility protection has been initiated. No releases of radioactive material requiring offsite response or monitoring are expected unless further degradation of safety systems occurs.	HU7.1	Other conditions exist which in the judgment of the ED/RM indicate that events are in progress or have occurred which indicate a potential degradation of the level of safety of the plant or indicate a security threat to facility protection has been initiated. No releases of radioactive material requiring offsite response or monitoring are expected unless further degradation of SAFETY SYSTEMS occurs.	None

NEI IC#	NEI IC Wording	SSES IC#(s)	SSES IC Wording	Difference/Deviation Justification
HA1	HOSTILE ACTION within the OWNER CONTROLLED AREA or airborne attack threat within 30 minutes. MODE: All	HA1	HOSTILE ACTION within the OWNER CONTROLLED AREA or airborne attack threat within 30 minutes MODE: All	None

NEI Ex. EAL #	NEI Example EAL Wording	SSES EAL #	SSES EAL Wording	Difference/Deviation Justification
1	A HOSTILE ACTION is occurring or has occurred within the OWNER CONTROLLED AREA as reported by the (site-specific security shift supervision).	HA1.1	A HOSTILE ACTION is occurring or has occurred within the OWNER CONTROLLED AREA as reported by the Security Shift Supervision **OR** A validated notification from NRC of an aircraft attack threat within 30 min. of the site	Example EALs #1 and #2 have been combined into a single EAL for ease of use.
2	A validated notification from NRC of an aircraft attack threat within 30 minutes of the site.			

NEI IC#	NEI IC Wording	SSES IC#(s)	SSES IC Wording	Difference/Deviation Justification
HA5	Gaseous release impeding access to equipment necessary for normal plant operations, cooldown or shutdown. MODE: All	HA5	Gaseous release IMPEDING access to equipment necessary for normal plant operations, cooldown or shutdown MODE: All	HA5.1 mode applicability is Mode All for the control rooms and Mode 3 only for the remaining areas because those Mode dependent safe operation and shutdown areas are only applicable in Mode 3 per Attachment 3 of the bases document.

NEI Ex. EAL #	NEI Example EAL Wording	SSES EAL #	SSES EAL Wording	Difference/Deviation Justification
1	a.Release of a toxic, corrosive, asphyxiant or flammable gas into any of the following plant rooms or areas: (site-specific list of plant rooms or areas with entry-related mode applicability identified) **AND** b. Entry into the room or area is prohibited or impeded.	HA5.1	Release of a toxic, corrosive, asphyxiant or flammable gas into **any** Table H-2 area **AND** Entry into the area is prohibited or IMPEDED (Note 5)	Plant rooms or areas with entry-related mode applicability are listed in Table H-2 to improve the readability of the EAL.
Note	**Note:**If the equipment in the listed room or area was already inoperable or out-of-service before the event occurred, then no emergency classification is warranted.	N/A	Note 5:If the equipment in the listed area was already inoperable or out-of-service before the event occurred, then no emergency classification is warranted.	None

Table H-2 Safe Operation & Shutdown Areas			
Elevation	**Unit 1 Area(s) ****	**Unit 2 Area(s) ****	**Mode(s)**
670'	RB 27	RB 32	3,4,5
683'	RB 27, 28, 29	RB 32, 33, 34	3,4,5
703'	RB 28, 29	RB 33, 34	3,4,5
719'	RB 25, 29	RB 30, 34	3,4,5
749'	RB 25, 29	RB 32, 33	3,4,5
729'	CS 12, 21	CS 12, 21	1, 2, 3, 4, 5, D

**** See Chart 1 for location of plant areas**

Chart 1- Plant Area Key Plan

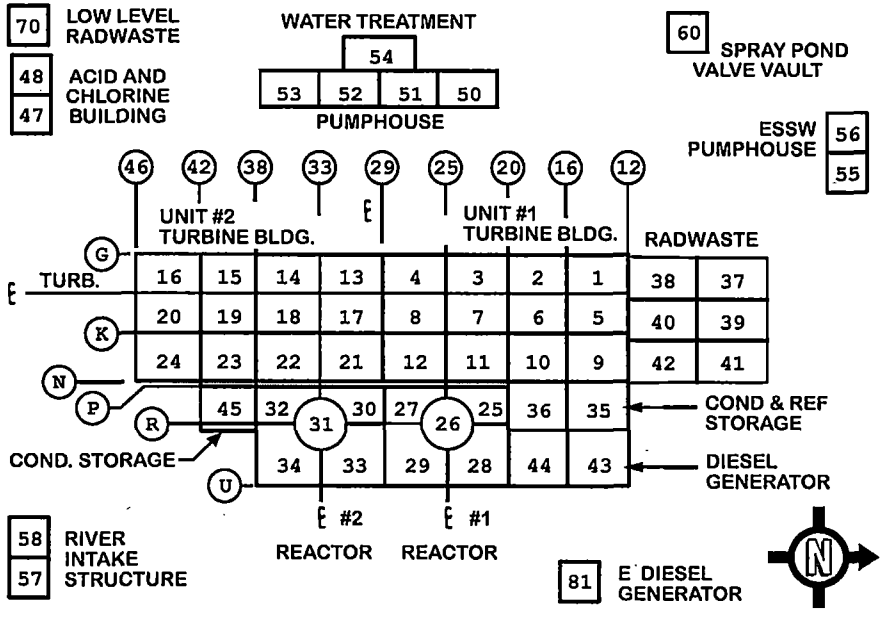

NEI IC#	NEI IC Wording	SSES IC#(s)	SSES IC Wording	Difference/Deviation Justification
HA6	Control Room evacuation resulting in transfer of plant control to alternate locations. MODE: All	HA6	Control Room evacuation resulting in transfer of plant control to alternate locations MODE: All	None

NEI Ex. EAL #	NEI Example EAL Wording	SSES EAL #	SSES EAL Wording	Difference/Deviation Justification
1	An event has resulted in plant control being transferred from the Control Room to (site-specific remote shutdown panels and local control stations).	HA6.1	An event has resulted in plant control being transferred from the Control Room to the Remote Shutdown Panels	Remote Shutdown Panels are the SSES site-specific remote shutdown panels and local control stations.

NEI IC#	NEI IC Wording	SSES IC#(s)	SSES IC Wording	Difference/Deviation Justification
HA7	Other conditions exist which in the judgment of the Emergency Director warrant declaration of an Alert. MODE: All	HA7	Other conditions exist that in the judgment of the ED/RM warrant declaration of an Alert MODE: All	None

NEI Ex. EAL #	NEI Example EAL Wording	SSES EAL #	SSES EAL Wording	Difference/Deviation Justification
1	Other conditions exist which, in the judgment of the Emergency Director, indicate that events are in progress or have occurred which involve an actual or potential substantial degradation of the level of safety of the plant or a security event that involves probable life threatening risk to site personnel or damage to site equipment because of HOSTILE ACTION. Any releases are expected to be limited to small fractions of the EPA Protective Action Guideline exposure levels.	HA7.1	Other conditions exist which, in the judgment of the ED/RM, indicate that events are in progress or have occurred which involve an actual or potential substantial degradation of the level of safety of the plant or a security event that involves probable life threatening risk to site personnel or damage to site equipment because of HOSTILE ACTION. Any releases are expected to be limited to small fractions of the EPA Protective Action Guideline exposure levels.	None

NEI IC#	NEI IC Wording	SSES IC#(s)	SSES IC Wording	Difference/Deviation Justification
HS1	HOSTILE ACTION within the PROTECTED AREA MODE: All	HS1	HOSTILE ACTION within the PROTECTED AREA MODE: All	None

NEI Ex. EAL #	NEI Example EAL Wording	SSES EAL #	SSES EAL Wording	Difference/Deviation Justification
1	A HOSTILE ACTION is occurring or has occurred within the PROTECTED AREA as reported by the (site-specific security shift supervision).	HS1.1	A HOSTILE ACTION is occurring or has occurred within the PROTECTED AREA as reported by the Security Shift Supervision	None

NEI IC#	NEI IC Wording	SSES IC#(s)	SSES IC Wording	Difference/Deviation Justification
HS6	Inability to control a key safety function from outside the Control Room. MODE: All	HS6	Inability to control a key safety function from outside the Control Room MODE: All	None

NEI Ex. EAL #	NEI Example EAL Wording	SSES EAL #	SSES EAL Wording	Difference/Deviation Justification
1	a.An event has resulted in plant control being transferred from the Control Room to (site-specific remote shutdown panels and local control stations). **AND** b.Control of **ANY** of the following key safety functions is not reestablished within (site-specific number of minutes). • Reactivity control • Core cooling [*PWR*] / RPV water level [*BWR*] • RCS heat removal	HS6.1	An event has resulted in plant control being transferred from the Control Room to the Remote Shutdown Panels **AND** Control of any of the following key safety functions is not reestablished within 15 min. (Note 1): • Reactivity • RPV water level • RCS heat removal	Remote Shutdown Panels are the SSES site-specific remote shutdown panels and local control stations. Deleted the word "control" after "reactivity" as it is redundant.

NEI IC#	NEI IC Wording	SSES IC#(s)	SSES IC Wording	Difference/Deviation Justification
HS7	Other conditions exist which in the judgment of the Emergency Director warrant declaration of a Site Area Emergency. MODE: All	HS7	Other conditions existing that in the judgment of the ED/RM warrant declaration of a Site Area Emergency MODE: All	None

NEI Ex. EAL #	NEI Example EAL Wording	SSES EAL #	SSES EAL Wording	Difference/Deviation Justification
1	Other conditions exist which in the judgment of the Emergency Director indicate that events are in progress or have occurred which involve actual or likely major failures of plant functions needed for protection of the public or HOSTILE ACTION that results in intentional damage or malicious acts, (1) toward site personnel or equipment that could lead to the likely failure of or, (2) that prevent effective access to equipment needed for the protection of the public. Any releases are not expected to result in exposure levels which exceed EPA Protective Action Guideline exposure levels beyond the site boundary.	HS7.1	Other conditions exist which in the judgment of the ED/RM indicate that events are in progress or have occurred which involve actual or likely major failures of plant functions needed for protection of the public or HOSTILE ACTION that results in intentional damage or malicious acts, (1) toward site personnel or equipment that could lead to the likely failure of or, (2) that prevent effective access to equipment needed for the protection of the public. Any releases are not expected to result in exposure levels which exceed EPA Protective Action Guideline exposure levels beyond the EMERGENCY PLAN BOUNDARY.	The EMERGENCY PLAN BOUNDARY is the site-specific receptor point.

NEI IC#	NEI IC Wording	SSES IC#(s)	SSES IC Wording	Difference/Deviation Justification
HG1	HOSTILE ACTION resulting in loss of physical control of the facility. MODE: All	HG1	HOSTILE ACTION resulting in loss of physical control of the facility MODE: All	None

NEI Ex. EAL #	NEI Example EAL Wording	SSES EAL #	SSES EAL Wording	Difference/Deviation Justification
1	a.A HOSTILE ACTION is occurring or has occurred within the PROTECTED AREA as reported by the (site-specific security shift supervision). **AND** b.**EITHER** of the following has occurred: 1. **ANY** of the following safety functions cannot be controlled or maintained. • Reactivity control • Core cooling [*PWR*]/RPV water level [*BWR*] • RCS heat removal **OR** 2. Damage to spent fuel has occurred or is IMMINENT.	HG1.1	A HOSTILE ACTION is occurring or has occurred within the PROTECTED AREA as reported by the Security Shift Supervision **AND** **EITHER** of the following has occurred: **Any** of the following safety functions **cannot** be controlled or maintained • Reactivity • RPV water level • RCS heat removal **OR** Damage to spent fuel has occurred or is IMMINENT	Deleted the word "control" after "reactivity" as it is redundant.

NEI IC#	NEI IC Wording	SSES IC#(s)	SSES IC Wording	Difference/Deviation Justification
HG7	Other conditions exist which in the judgment of the Emergency Director warrant declaration of a General Emergency MODE: All	HG7	Other conditions exist which in the judgment of the ED warrant declaration of a General Emergency MODE: All	None

NEI Ex. EAL #	NEI Example EAL Wording	SSES EAL #	SSES EAL Wording	Difference/Deviation Justification
1	Other conditions exist which in the judgment of the Emergency Director indicate that events are in progress or have occurred which involve actual or IMMINENT substantial core degradation or melting with potential for loss of containment integrity or HOSTILE ACTION that results in an actual loss of physical control of the facility. Releases can be reasonably expected to exceed EPA Protective Action Guideline exposure levels offsite for more than the immediate site area.	HG7.1	Other conditions exist which in the judgment of the ED/RM indicate that events are in progress or have occurred which involve actual or IMMINENT substantial core degradation or melting with potential for loss of containment integrity or HOSTILE ACTION that results in an actual loss of physical control of the facility. Releases can be reasonably expected to exceed EPA Protective Action Guideline exposure levels offsite for more than the immediate site area.	None

Category S

System Malfunction

NEI IC#	NEI IC Wording	SSES IC#(s)	SSES IC Wording	Difference/Deviation Justification
SU1	Loss of all offsite AC power capability to emergency buses for 15 minutes or longer. MODE: Power Operation, Startup, Hot Standby, Hot Shutdown	SU1	Loss of **all** offsite AC power capability to essential buses for 15 minutes or longer MODE: 1 - Power Operation, 2 - Startup, 3 - Hot Shutdown	"essential" is the site-specific designation for the SSES emergency AC buses.

NEI Ex. EAL #	NEI Example EAL Wording	SSES EAL #	SSES EAL Wording	Difference/Deviation Justification
1	Loss of **ALL** offsite AC power capability to (site-specific emergency buses) for 15 minutes or longer.	SU1.1	Loss of **all** offsite AC power capability to **all** 4.16 kV ESS buses on **EITHER** unit for ≥15 min. (Note 1)	The ESS buses are the site-specific emergency buses. Added "on **EITHER** unit" to clarify applicability to either unit.
Note	The Emergency Director should declare the Unusual Event promptly upon determining that 15 minutes has been exceeded, or will likely be exceeded.	N/A	Note 1: The ED/RM should declare the event promptly upon determining that time limit has been exceeded, or will likely be exceeded.	The classification timeliness note has been standardized across the SSES EAL scheme by referencing the "time limit" specified within the EAL wording.

NEI IC#	NEI IC Wording	SSES IC#(s)	SSES IC Wording	Difference/Deviation Justification
SU2	UNPLANNED loss of Control Room indications for 15 minutes or longer. MODE: Power Operation, Startup, Hot Standby, Hot Shutdown	SU3	UNPLANNED loss of Control Room indications for 15 minutes or longer. MODE: 1 - Power Operation, 2 - Startup, 3 - Hot Shutdown	None

NEI Ex. EAL #	NEI Example EAL Wording	SSES EAL #	SSES EAL Wording	Difference/Deviation Justification
1	An UNPLANNED event results in the inability to monitor one or more of the following parameters from within the Control Room for 15 minutes or longer.	SU3.1	An UNPLANNED event results in the inability to monitor one or more Table S-1 parameters from within the Control Room for ≥15 min. (Note 1)	The site-specific Safety System Parameter list is tabulated in Table S-1.
Note	The Emergency Director should declare the Unusual Event promptly upon determining that 15 minutes has been exceeded, or will likely be exceeded.	N/A	Note 1: The ED/RM should declare the event promptly upon determining that time limit has been exceeded, or will likely be exceeded.	The classification timeliness note has been standardized across the SSES EAL scheme by referencing the "time limit" specified within the EAL wording.

[*BWR parameter list*]	[*PWR parameter list*]
Reactor Power	Reactor Power
RPV Water Level	RCS Level
RPV Pressure	RCS Pressure
Primary Containment Pressure	In-Core/Core Exit Temperature
Suppression Pool Level	Levels in at least (site-specific number) steam generators
Suppression Pool Temperature	Steam Generator Auxiliary or Emergency Feed Water Flow

Table S-1 Safety System Parameters
• Reactor power • RPV water level • RPV pressure • Primary Containment pressure • Suppression Pool water level • Suppression Pool temperature

NEI IC#	NEI IC Wording	SSES IC#(s)	SSES IC Wording	Difference/Deviation Justification
SU3	Reactor coolant activity greater than Technical Specification allowable limits. MODE: Power Operation, Startup, Hot Standby, Hot Shutdown	SU4	Reactor coolant activity greater than Technical Specification allowable limits MODE: 1 - Power Operation, 2 - Startup, 3 - Hot Shutdown	None

NEI Ex. EAL #	NEI Example EAL Wording	SSES EAL #	SSES EAL Wording	Difference/Deviation Justification
1	(Site-specific radiation monitor) reading greater than (site-specific value).	SU4.1	Offgas pretreatment monitor high-high radiation alarm	The Offgas Pretreatment RMS monitors radioactivity in the Offgas system downstream of the Motive Steam Jet Condenser. The monitor detects the radiation level that is attributable to the fission gases produced in the reactor and transported with steam through the turbine to the condenser.
2	Sample analysis indicates that a reactor coolant activity value is greater than an allowable limit specified in Technical Specifications.	SU4.2	Coolant activity > 0.2 µCi/gm dose equivalent I-131 for > 48 hours **OR** Coolant activity > 4.0 µCi/gm dose equivalent I-131 at any time	The specific iodine activity is limited to ≤0.2 µCi/gm Dose Equivalent I-131. This limit ensures the source term assumed in the safety analysis for the Main Steam Line Break (MSLB) outside containment is not exceeded, so any release of radioactivity to the environment during an MSLB is less than a small fraction of the regulatory limits. The upper limit of 4.0 µCi/gm Dose Equivalent I-131ensures that the thyroid dose from an MSLB will not exceed the dose guidelines of 10 CFR 50.67 or Control Room operator dose limits specified in GDC 19 of 10 CFR 50, Appendix A.

NEI IC#	NEI IC Wording	SSES IC#(s)	SSES IC Wording	Difference/Deviation Justification
SU4	RCS leakage for 15 minutes or longer. MODE: Power Operation, Startup, Hot Standby, Hot Shutdown	SU5	RCS leakage for 15 minutes or longer MODE: 1 - Power Operation, 2 - Startup, 3 - Hot Shutdown	None

NEI Ex. EAL #	NEI Example EAL Wording	SSES EAL #	SSES EAL Wording	Difference/Deviation Justification
1	RCS unidentified or pressure boundary leakage greater than (site-specific value) for 15 minutes or longer.	SU5.1	RCS unidentified or pressure boundary leakage > 10 gpm for ≥ 15 min. **OR** RCS identified leakage > 25 gpm for ≥15 min. **OR** Leakage from the RCS to a location outside Primary Containment > 25 gpm for ≥15 min. (Note 1)	Example EALs #1, 2 and 3 have been combined into a single EAL for usability. Statements in the SSES bases were added for clarification: Drywell leakage calculations in SO-100(200)-006 take a finite period of time to complete. Leakage rates cannot be determined quickly by merely observing an indicator. For this reason, the 15 minutes clock starts after it is determined that leakage rates exceed the entry value. Upon determination that leakage has increased substantially, effort should be made to quantify this leakage in a timely manner. ON-1(2)00-005, "Excessive Drywell Leakage Identification", contains methods of quickly estimating drywell leakage. These methods can be used in lieu of completing the calculations contained in SO-1(2)00-006. Means to directly quantify RCS leakage outside containment may not be available. For this reason, judgment must be used for assessment of the 25 gpm leak rate criterion. For example, a short steam plume that does not appreciably change room temperature or room radiation levels can be judged to be less than 25 gpm. A leak that causes room temperature to rise rapidly above maximum safe temperatures could be judged to be greater than 25 gpm in the absence of measurable leak rates, and thus judgment is an acceptable method to evaluate this criterion.
2	RCS identified leakage greater than (site-specific value) for 15 minutes or longer.			
3	Leakage from the RCS to a location outside containment greater than 25 gpm for 15 minutes or longer.			

Note	The Emergency Director should declare the Unusual Event promptly upon determining that 15 minutes has been exceeded, or will likely be exceeded.	N/A	Note 1: The ED/RM should declare the event promptly upon determining that time limit has been exceeded, or will likely be exceeded.	The classification timeliness note has been standardized across the SSES EAL scheme by referencing the "time limit" specified within the EAL wording.

NEI IC#	NEI IC Wording	SSES IC#(s)	SSES IC Wording	Difference/Deviation Justification
SU5	Automatic or manual (trip [PWR] / scram [BWR]) fails to shutdown the reactor. MODE: Power Operation	SU6	Automatic or manual scram fails to shut down the reactor MODE: 1 - Power Operation, 2 - Startup	Included Mode 2 Startup consistent with developer note. Reactor power can be above the APRM downscale shutdown threshold of 5% while still in Mode 2.

NEI Ex. EAL #	NEI Example EAL Wording	SSES EAL #	SSES EAL Wording	Difference/Deviation Justification
1	a.An automatic (trip [PWR] / scram [BWR]) did not shutdown the reactor. **AND** b. A subsequent manual action taken at the reactor control consoles is successful in shutting down the reactor.	SU6.1	An automatic scram did not shut down the reactor after **any** RPS setpoint is exceeded **AND** A subsequent automatic scram or manual scram action taken at the reactor control console (Manual PBs, Mode Switch, ARI) is successful in shutting down the reactor as indicated by reactor power < 5% (APRM downscale) (Note 8)	Added the phrase "... after **any** RPS setpoint is exceeded " to clarify that it is a failure of the automatic scram when a valid scram signal has been exceeded. Added "subsequent automatic scram or..." to take credit for automatic initiation of ARI subsequent to an RPS failure to complete an automatic scram. Automatic initiation of ARI to initiate an automatic scram is a design feature of ARI. Manual PBs, Mode Switch, and initiation of ARI are the manual actions taken to shut down the reactor. Reactor power below 5% (APRM downscale) is the site-specific indication of a successful reactor scram.
2	a.A manual trip ([PWR] / scram [BWR]) did not shutdown the	SU6.2	A manual scram did **not** shut down the reactor after **any**	Added the phrase "... after **any** manual scram action was initiated" to clarify that it is a failure of any manual scram when an actual manual

	reactor. **AND** b.**EITHER** of the following: 1. A subsequent manual action taken at the reactor control consoles is successful in shutting down the reactor. **OR** 2 A subsequent automatic (trip [PWR] / scram [BWR]) is successful in shutting down the reactor.		manual scram action was initiated **AND** A subsequent automatic scram or manual scram action taken at the reactor control console (Manual PBs, Mode Switch, ARI) is successful in shutting down the reactor as indicated by reactor power < 5% (APRM downscale) (Note 8)	scram signal has been inserted. Combined conditions b.1 and b.2 into a single statement to simplify the presentation. Manual PBs, Mode Switch, and initiation of ARI are the manual actions taken to shut down the reactor. Reactor power below 5% (APRM downscale) is the site-specific indication of a successful reactor scram.
Notes	**Note:**A manual action is any operator action, or set of actions, which causes the control rods to be rapidly inserted into the core, and does not include manually driving in control rods or implementation of boron injection strategies.	N/A	Note 8: A manual scram action is any operator action, or set of actions, which causes the control rods to be rapidly inserted into the core, and does **not** include manually driving in control rods or implementation of boron injection strategies.	Added the scram to actions to be consistent with EAL wording.

NEI IC#	NEI IC Wording	SSES IC#(s)	SSES IC Wording	Difference/Deviation Justification
SU6	Loss of all onsite or offsite communications capabilities. MODE: Power Operation, Startup, Hot Standby, Hot Shutdown	SU7	Loss of all onsite or offsite communications capabilities. MODE: 1 - Power Operation, 2 - Startup, 3 - Hot Shutdown	None

NEI Ex. EAL #	NEI Example EAL Wording	SSES EAL #	SSES EAL Wording	Difference/Deviation Justification
1	Loss of **ALL** of the following onsite communication methods: (site-specific list of communications methods)	SU7.1	Loss of all Table S-3 onsite communication methods **OR** Loss of all Table S-3 ORO communication methods **OR** Loss of all Table S-3 NRC communication methods	Example EALs #1, 2 and 3 have been combined into a single EAL for simplification of presentation. Table S-3 provides a site-specific list of onsite, ORO and NRC communications methods.
2	Loss of **ALL** of the following ORO communications methods: (site-specific list of communications methods)			
3	Loss of **ALL** of the following NRC communications methods: (site-specific list of communications methods)			

Table S-3 Communication Methods			
System	**Onsite**	**ORO**	**NRC**
UHF Radio	X		
Plant PA System	X		
Dedicated Conference Lines		X	
Commercial Telephone Systems	X	X	X
Cellular Telephone		X	X
FTS-2001 (ENS)		X	X

NEI IC#	NEI IC Wording	SSES IC#(s)	SSES IC Wording	Difference/Deviation Justification
SU7	Failure to isolate containment or loss of containment pressure control. [*PWR*] MODE: Hot Standby, Hot Shutdown	N/A	N/A	This IC and its associated example EALs are applicable to PWRs only and therefore not included.

NEI Ex. EAL #	NEI Example EAL Wording	SSES EAL #	SSES EAL Wording	Difference/Deviation Justification
1	a.Failure of containment to isolate when required by an actuation signal. **AND** b.**ALL** required penetrations are not closed within 15 minutes of the actuation signal.	N/A	N/A	This IC and its associated example EALs are applicable to PWRs only and therefore not included.
2	a.Containment pressure greater than (site-specific pressure). **AND** b.Less than one full train of (site-specific system or equipment) is operating per design for 15 minutes or longer.	N/A	N/A	This IC and its associated example EALs are applicable to PWRs only and therefore not included.

NEI IC#	NEI IC Wording	SSES IC#(s)	SSES IC Wording	Difference/Deviation Justification
SA1	Loss of all but one AC power source to emergency buses for 15 minutes or longer. MODE: Power Operation, Startup, Hot Standby, Hot Shutdown	SA1	Loss of **all but one** AC power source to essential buses for 15 minutes or longer. MODE: 1 - Power Operation, 2 - Startup, 3 - Hot Shutdown	"essential" is the site-specific designation for the SSES emergency AC buses.

NEI Ex. EAL #	NEI Example EAL Wording	SSES EAL #	SSES EAL Wording	Difference/Deviation Justification
1	a.AC power capability to (site-specific emergency buses) is reduced to a single power source for 15 minutes or longer. **AND** b. Any additional single power source failure will result in a loss of all AC power to SAFETY SYSTEMS.	SA1.1	AC power capability to **all** 4.16 kV ESS buses on **EITHER** unit reduced to a single power source for ≥15 min. (Note 1) **AND** **Any** additional single power source failure will result in loss of **all** AC power to SAFETY SYSTEMS	ESS buses are the site-specific emergency buses. Added "on **EITHER** unit" to clarify applicability to either unit.
Note	The Emergency Director should declare the Alert promptly upon determining that 15 minutes has been exceeded, or will likely be exceeded.	N/A	Note 1: The ED/RM should declare the event promptly upon determining that time limit has been exceeded, or will likely be exceeded.	The classification timeliness note has been standardized across the SSES EAL scheme by referencing the "time limit" specified within the EAL wording.

NEI IC#	NEI IC Wording	SSES IC#(s)	SSES IC Wording	Difference/Deviation Justification
SA2	UNPLANNED loss of Control Room indications for 15 minutes or longer with a significant transient in progress. MODE: Power Operation, Startup, Hot Standby, Hot Shutdown	SA3	UNPLANNED loss of Control Room indications for 15 minutes or longer with a significant transient in progress. MODE: 1 - Power Operation, 2 - Startup, 3 - Hot Shutdown	None

NEI Ex. EAL #	NEI Example EAL Wording	SSES EAL #	SSES EAL Wording	Difference/Deviation Justification
1	An UNPLANNED event results in the inability to monitor one or more of the following parameters from within the Control Room for 15 minutes or longer. **AND** **ANY** of the following transient events in progress. • Automatic or manual runback greater than 25% thermal reactor power • Electrical load rejection greater than 25% full electrical load • Reactor scram [*BWR*] / trip [*PWR*] • ECCS (SI) actuation • Thermal power oscillations	SA3.1	An UNPLANNED event results in the inability to monitor one or more Table S-1 parameters from within the Control Room for ≥15 min. (Note 1) **AND** **Any** significant transient is in progress, Table S-2	The site-specific Safety System Parameters are listed in Table S-1. The significant transient list has been tabularized in Table S-2 for ease of use. Revised transient runback to read "Runback > 25% reactor power". Full electrical load can change based on ambient conditions, which affect condenser backpressure and turbine efficiency, and is also affected by the generator capability curve. Deleted "Electrical load rejection > 25% electrical load" since any load rejection that occurs when >25% power results in a reactor scram. Added RRC pump trip while > 25% reactor power as an additional BWR transient that is significant.

	greater than 10% [*BWR*]			
Note	The Emergency Director should declare the Unusual Event promptly upon determining that 15 minutes has been exceeded, or will likely be exceeded.	N/A	Note 1: The ED should declare the event promptly upon determining that time limit has been exceeded, or will likely be exceeded.	The classification timeliness note has been standardized across the SSES EAL scheme by referencing the "time limit" specified within the EAL wording.

[*BWR parameter list*]	[*PWR parameter list*]
Reactor Power	Reactor Power
RPV Water Level	RCS Level
RPV Pressure	RCS Pressure
Primary Containment Pressure	In-Core/Core Exit Temperature
Suppression Pool Level	Levels in at least (site-specific number) steam generators
Suppression Pool Temperature	Steam Generator Auxiliary or Emergency Feed Water Flow

Table S-1 Safety System Parameters
• Reactor power • RPV water level • RPV pressure • Primary Containment pressure • Suppression Pool water level • Suppression Pool temperature

Table S-2 Significant Transients
• Reactor scram • Runback > 25% reactor power • RRC pump trip while > 25% reactor power • ECCS injection • Thermal power oscillations > 10%

NEI IC#	NEI IC Wording	SSES IC#(s)	SSES IC Wording	Difference/Deviation Justification
SA5	Automatic or manual (trip [PWR] / scram [BWR]) fails to shutdown the reactor, and subsequent manual actions taken at the reactor control consoles are not successful in shutting down the reactor. MODE: Power Operation	SA6	Automatic or manual scram fails to shut down the reactor and subsequent manual actions taken at the reactor control consoles are not successful in shutting down the reactor MODE: 1 - Power Operation, 2 - Startup	Included Mode 2 Startup consistent with developer note. Reactor power can be above the APRM downscale shutdown threshold of 5% while still in Mode 2.

NEI Ex. EAL #	NEI Example EAL Wording	SSES EAL #	SSES EAL Wording	Difference/Deviation Justification
1	a.An automatic or manual (trip [PWR] / scram [BWR]) did not shutdown the reactor. **AND** b.Manual actions taken at the reactor control consoles are not successful in shutting down the reactor.	SA6.1	An automatic or manual scram fails to shut down the reactor **AND** Manual scram actions taken at the reactor control console (Manual PBs, Mode Switch, ARI) are not successful in shutting down the reactor as indicated by reactor power ≥5% (Note 8)	Manual PBs, Mode Switch, and initiation of ARI are the manual actions taken to shut down the reactor. Reactor power below 5% is the site-specific indication of a successful reactor scram.

NEI IC#	NEI IC Wording	SSES IC#(s)	SSES IC Wording	Difference/Deviation Justification
SA9	Hazardous event affecting a SAFETY SYSTEM needed for the current operating mode. MODE: Power Operation, Startup, Hot Standby, Hot Shutdown	SA8	Hazardous event affecting a SAFETY SYSTEM required for the current operating mode. MODE: 1 - Power Operation, 2 - Startup, 3 - Hot Shutdown	None

NEI Ex. EAL #	NEI Example EAL Wording	SSES EAL #	SSES EAL Wording	Difference/Deviation Justification
1	a.The occurrence of **ANY** of the following hazardous events: • Seismic event (earthquake) • Internal or external flooding event • High winds or tornado strike • FIRE • EXPLOSION • (site-specific hazards) • Other events with similar hazard characteristics as determined by the Shift Manager **AND** b.**EITHER** of the following: 1. Event damage has caused indications of degraded performance in at least one train of a SAFETY	SA8.1	The occurrence of **any** Table S-4 hazardous event **AND** **EITHER**: Event damage has caused indications of degraded performance in at least one train of a SAFETY SYSTEM required for the current operating mode **OR** The event has caused VISIBLE DAMAGE to a SAFETY SYSTEM component or structure required for the current operating mode	The hazardous events have been listed in Table S-4 to improve the readability of the SSES EAL.

	SYSTEM needed for the current operating mode. **OR** 2. The event has caused VISIBLE DAMAGE to a SAFETY SYSTEM component or structure needed for the current operating mode.			

Table S-4 Hazardous Events
• Seismic event (earthquake) • Internal or external FLOODING event • High winds or tornado strike • FIRE • EXPLOSION • Other events with similar hazard characteristics as determined by the Shift Manager

NEI IC#	NEI IC Wording	SSES IC#(s)	SSES IC Wording	Difference/Deviation Justification
SS1	Loss of all offsite and all onsite AC power to emergency buses for 15 minutes or longer. MODE: Power Operation, Startup, Hot Standby, Hot Shutdown	SS1	Loss of **all** offsite and **all** onsite AC power to essential buses for 15 minutes or longer MODE: 1 - Power Operation, 2 - Startup, 3 - Hot Shutdown	"essential" is the site-specific designation for the SSES emergency AC buses.

NEI Ex. EAL #	NEI Example EAL Wording	SSES EAL #	SSES EAL Wording	Difference/Deviation Justification
1	Loss of **ALL** offsite and **ALL** onsite AC power to (site-specific emergency buses) for 15 minutes or longer.	SS1.1	Loss of **all** offsite and **all** onsite AC power capability to **all** 4.16 kV ESS buses on **EITHER** unit for ≥15 min. (Note 1)	ESS buses are the site-specific emergency buses. Added "on **EITHER** unit" to clarify applicability to either unit.
Note	The Emergency Director should declare the Unusual Event promptly upon determining that 15 minutes has been exceeded, or will likely be exceeded.	N/A	Note 1: The ED/RM should declare the event promptly upon determining that time limit has been exceeded, or will likely be exceeded.	The classification timeliness note has been standardized across the SSES EAL scheme by referencing the "time limit" specified within the EAL wording.

NEI IC#	NEI IC Wording	SSES IC#(s)	SSES IC Wording	Difference/Deviation Justification
SS5	Inability to shutdown the reactor causing a challenge to (core cooling [*PWR*] / RPV water level [*BWR*]) or RCS heat removal. MODE: Power Operation	SS6	Inability to shut down the reactor causing a challenge to RPV water level or RCS heat removal MODE: 1 - Power Operation, 2 - Startup	Included Mode 2 Startup consistent with developer note. Reactor power can be above the APRM downscale shutdown threshold of 4% while still in Mode 2.

NEI Ex. EAL #	NEI Example EAL Wording	SSES EAL #	SSES EAL Wording	Difference/Deviation Justification
1	a.An automatic or manual (trip [PWR] / scram [BWR]) did not shutdown the reactor. **AND** b.All manual actions to shutdown the reactor have been unsuccessful. **AND** c.**EITHER** of the following conditions exist: • (Site-specific indication of an inability to adequately remove heat from the core) • (Site-specific indication of an inability to adequately remove heat from the RCS)	SS6.1	An automatic or manual scram fails to shut down the reactor **AND** **All** actions to shut down the reactor are **not** successful as indicated by reactor power ≥5% **AND** **EITHER**: • RPV level **CANNOT** BE RESTORED AND MAINTAINED > -179 in. or **CANNOT** be determined **OR** • Suppression pool water temperature AND RPV pressure **CANNOT** BE MAINTAINED below the Heat Capacity Temperature Limit (Figure - HCTL)	Reactor power < 5% is the site-specific indication of a successful reactor scram. Deleted the term "manual actions" from the second condition. For generic IC SS5, all actions to shut down the reactor can be credited, including emergency boration which is not considered a "manual" scram action. Indication of an inability to adequately remove heat from the core occurs when RPV water level cannot be restored and maintained above -179 in., which is the EOP RPV water level indicative of a loss of adequate core cooling. Indication of an inability to adequately remove heat from the RCS occurs when parameters are in the unsafe region of the HCTL curve.

NEI IC#	NEI IC Wording	SSES IC#(s)	SSES IC Wording	Difference/Deviation Justification
SS8	Loss of all Vital DC power for 15 minutes or longer. MODE: Power Operation, Startup, Hot Standby, Hot Shutdown	SS2	Loss of **all** vital DC power for 15 minutes or longer. MODE: 1 - Power Operation, 2 - Startup, 3 - Hot Shutdown	None

NEI Ex. EAL #	NEI Example EAL Wording	SSES EAL #	SSES EAL Wording	Difference/Deviation Justification
1	Indicated voltage is less than (site-specific bus voltage value) on **ALL** (site-specific Vital DC busses) for 15 minutes or longer.	SS2.1	Indicated voltage is < 105 VDC on **all** of the following vital 125 VDC main distribution buses on the affected unit for ≥15 min. (Note 1): • 1D612 (2D612) • 1D622 (2D622) • 1D632 (2D632) • 1D642 (2D642)	105 VDC on 1D612 (2D612), 1D622 (2D622), 1D632 (2D632) and 1D642 (2D642) is the site-specific minimum vital DC bus design voltage. Clarified that the plant design of indicated voltage for the vital 125 VDC main distribution buses is local only. Local voltage indication is available for each bus based on dispatching a field operator in accordance with Control Room alarm response procedure AR-1(2)06-001 (A12,B12,C12,D12). Field observation of indicated voltage constitutes the point in time when availability of indications to plant operators that an emergency action level has been, or may be, exceeded.
Note	The Emergency Director should declare the Unusual Event promptly upon determining that 15 minutes has been exceeded, or will likely be exceeded.	N/A	Note 1:The ED/RM should declare the event promptly upon determining that time limit has been exceeded, or will likely be exceeded.	The classification timeliness note has been standardized across the SSES EAL scheme by referencing the "time limit" specified within the EAL wording.

NEI IC#	NEI IC Wording	SSES IC#(s)	SSES IC Wording	Difference/Deviation Justification
SG1	Prolonged loss of all offsite and all onsite AC power to emergency buses. MODE: Power Operation, Startup, Hot Standby, Hot Shutdown	SG1a	Prolonged loss of **all** offsite and **all** onsite AC power to essential buses MODE: 1 - Power Operation, 2 - Startup, 3 - Hot Shutdown	"essential" is the site-specific designation for the SSES emergency AC buses. Combined NEI ICs SG1 and SG8 under the loss of power category for usability.

NEI Ex. EAL #	NEI Example EAL Wording	SSES EAL #	SSES EAL Wording	Difference/Deviation Justification
1	a.Loss of **ALL** offsite and **ALL** onsite AC power to (site-specific emergency buses). **AND** b.**EITHER** of the following: • Restoration of at least one AC emergency bus in less than (site-specific hours) is not likely. • (Site-specific indication of an inability to adequately remove heat from the core)	SG1.1	Loss of **all** offsite and **all** onsite AC power capability to **all** 4.16 kV ESS buses on **EITHER** unit **AND** **EITHER:** Restoration of at least one 4.16 kV ESS bus in < 4 hours is **not** likely (Note 1) **OR** RPV water level **CANNOT** BE RESTORED AND MAINTAINED > -179 in.	ESS buses are the site-specific emergency buses. Added "on **EITHER** unit" to clarify applicability to either unit. 4 hours is the site-specific SBO coping analysis time. Indication of an inability to adequately remove heat from the core occurs when RPV water level cannot be restored and maintained above -179 in., which is the EOP RPV water level indicative of a loss of adequate core cooling.
Note	The Emergency Director should declare the General Emergency promptly upon determining that (site-specific hours) has been exceeded, or will likely be exceeded.	N/A	Note 1: The ED/RM should declare the event promptly upon determining that time limit has been exceeded, or will likely be exceeded.	The classification timeliness note has been standardized across the SSES EAL scheme by referencing the "time limit" specified within the EAL wording.

NEI IC#	NEI IC Wording	SSES IC#(s)	SSES IC Wording	Difference/Deviation Justification
SG8	Loss of all AC and Vital DC power sources for 15 minutes or longer. MODE: Power Operation, Startup, Hot Standby, Hot Shutdown	SG1b	Loss of **all** essential AC and vital DC power sources for 15 minutes or longer. MODE: 1 - Power Operation, 2 – Startup, 3 - Hot Shutdown	"essential" is the site-specific designation for the SSES emergency AC buses. Combined NEI ICs SG1 and SG8 under the loss of power category for usability.

NEI Ex. EAL #	NEI Example EAL Wording	SSES EAL #	SSES EAL Wording	Difference/Deviation Justification
1	a.Loss of **ALL** offsite and **ALL** onsite AC power to (site-specific emergency buses) for 15 minutes or longer. **AND** b.Indicated voltage is less than (site-specific bus voltage value) on ALL (site-specific Vital DC busses) for 15 minutes or longer.	SG1.2	Loss of **all** offsite and **all** onsite AC power capability to **all** 4.16 kV ESS buses on **EITHER** unit for ≥15 min. **AND** Indicated voltage is < 105 VDC on **all** of the following vital 125 VDC main distribution buses on the affected unit for ≥15 min. (Note 1): • 1D612 (2D612) • 1D622 (2D622) • 1D632 (2D632) • 1D642 (2D642)	ESS buses are the site-specific emergency buses. Added "on **EITHER** unit" to clarify applicability to either unit. 105 VDC on 1D612 (2D612), 1D622 (2D622), 1D632 (2D632) and 1D642 (2D642) is the site-specific minimum vital DC bus design voltage. Clarified that the plant design of indicated voltage for the vital 125 VDC main distribution buses is local only. Local voltage indication is available for each bus based on dispatching a field operator in accordance with Control Room alarm response procedure AR-1(2)06-001 (A12,B12,C12,D12). Field observation of indicated voltage constitutes the point in time when availability of indications to plant operators that an emergency action level has been, or may be, exceeded.
Note	The Emergency Director should declare the Unusual Event promptly upon determining that 15 minutes has been exceeded, or will likely be exceeded.	N/A	Note 1: The ED/RM should declare the event promptly upon determining that time limit has been	The classification timeliness note has been standardized across the SSES EAL scheme by referencing the "time limit" specified within the EAL wording.

			exceeded, or will likely be exceeded.	

Enclosure 3 to PLA-7399

Mark-up of Proposed Additional Changes Made to the SSES EAL Basis Document

PROCEDURE COVER SHEET

SUSQUEHANNA, LLC PROCEDURE	
EAL CLASSIFICATION BASES (ADDITIONAL CHANGES) ADHERENCE LEVEL: INFORMATION USE	02/13/2015 EP-RM-004 Revision [X] Page 1 of 288

QUALITY CLASSIFICATION:	APPROVAL CLASSIFICATION:
(X) QA Program ( ) Non-QA Program	(X) Plant ( ) Non-Plant ( ) Instruction

EFFECTIVE DATE: _____

PERIODIC REVIEW FREQUENCY: 2 Year

PERIODIC REVIEW DUE DATE: REWL X0200

RECOMMENDED REVIEWS: All

Procedure Owner: Emergency Planning

Responsible Supervisor: Manager-EP

Responsible FUM: Manager-EP

Responsible Approver: Manager-NRA

TABLE OF CONTENTS

CAUTION

This Reference Manual shall follow the process described in NDAP-QA-0004, Procedure Change Process, for subsequent revisions AND NOT the change process described under EP-112, Emergency Plan Reference Manual Program. It must be maintained in accordance with 10 CFR50.54(q).

1.0 PURPOSE

This document provides an explanation and rationale for each Emergency Action Level (EAL) included in the EAL Upgrade Project for Susquehanna, LLC. It should be used to facilitate review of the Susquehanna EALs and provide historical documentation for future reference. Decision-makers responsible for implementation of EP-PS-100, Emergency Director Control Room (ref. 4.2.1), EP-PS-101, TSC Emergency Director (ref. 4.2.2) and EP-PS-200, Recovery Manager (ref. 4.2.3), may use this document as a technical reference in support of EAL interpretation. This information may assist the Emergency Director/Recovery Manager in making classifications, particularly those involving judgment or multiple events. The bases information may also be useful in training and for explaining event classifications to off-site officials.

The expectation is that emergency classifications are to be made as soon as conditions are present and recognizable for the classification, but within 15 minutes or less in all cases of conditions present. Use of this document for assistance is not intended to delay the emergency classification.

2.0 DISCUSSION

2.1 Background

EALs are the plant-specific indications, conditions or instrument readings that are utilized to classify emergency conditions defined in the Susquehanna Emergency Plan.

In 1992, the NRC endorsed NUMARC/NESP-007 "Methodology for Development of Emergency Action Levels" as an alternative to NUREG-0654 EAL guidance.

NEI 99-01 (NUMARC/NESP-007) Revisions 4 and 5 were subsequently issued for industry implementation. Enhancements over earlier revisions included:

- Consolidating the system malfunction initiating conditions and example emergency action levels which address conditions that may be postulated to occur during plant shutdown conditions.
- Initiating conditions and example emergency action levels that fully address conditions that may be postulated to occur at permanently Defueled Stations and Independent Spent Fuel Storage Installations (ISFSIs).
- Simplifying the fission product barrier EAL threshold for a Site Area Emergency.

Subsequently, Revision 6 of NEI 99-01 has been issued which incorporates resolutions to numerous implementation issues including the NRC EAL Frequently Asked Questions (FAQs). Using NEI 99-01 Revision 6, "Methodology for the Development of Emergency Action Levels for Non-Passive Reactors," November 2012 (ADAMS Accession Number ML12326A805) (ref.

4.1.1), Susquehanna conducted an EAL implementation upgrade project that produced the EALs discussed herein.

2.2 Fission Product Barriers

Fission product barrier thresholds represent threats to the defense in depth design concept that precludes the release of radioactive fission products to the environment. This concept relies on multiple physical barriers, any one of which, if maintained intact, precludes the release of significant amounts of radioactive fission products to the environment.

Many of the EALs derived from the NEI methodology are fission product barrier threshold based. That is, the conditions that define the EALs are based upon thresholds that represent the loss or potential loss of one or more of the three fission product barriers. "Loss" and "Potential Loss" signify the relative damage and threat of damage to the barrier. A "Loss" threshold means the barrier no longer assures containment of radioactive materials. A "Potential Loss" threshold implies an increased probability of barrier loss and decreased certainty of maintaining the barrier.

The primary fission product barriers are:

A. Fuel Clad (FC): The Fuel Clad Barrier consists of the cladding material that contains the fuel pellets.

B. Reactor Coolant System (RCS): The RCS Barrier is the reactor coolant system pressure boundary and includes the Reactor Pressure Vessel (RPV) and all reactor coolant system piping up to and including the isolation valves.

C. Primary Containment (PC): The Primary Containment Barrier includes the drywell, the wetwell, their respective interconnecting paths, and other connections up to and including the outermost containment isolation valves. Primary Containment Barrier thresholds are used as criteria for escalation of the Emergency Classification Level (ECL) from Alert to a Site Area Emergency or a General Emergency.

2.3 Fission Product Barrier Classification Criteria

The following criteria are the bases for event classification related to fission product barrier loss or potential loss:

Alert:

Any loss or any potential loss of either Fuel Clad or RCS barrier

Site Area Emergency:

Loss or potential loss of any two barriers

General Emergency:

Loss of any two barriers and loss or potential loss of the third barrier

2.4 EAL Organization

The Susquehanna EAL scheme includes the following features:

- Division of the EAL set into three broad groups:
  - EALs applicable under all plant operating modes – This group would be reviewed by the EAL-user any time emergency classification is considered.
  - EALs applicable only under hot operating modes – This group would only be reviewed by the EAL-user when the plant is in Hot Shutdown, Startup, or Power Operation mode.
  - EALs applicable only under cold operating modes – This group would only be reviewed by the EAL-user when the plant is in Cold Shutdown, Refueling or Defueled mode.

  The purpose of the groups is to avoid review of hot condition EALs when the plant is in a cold condition and avoid review of cold condition EALs when the plant is in a hot condition. This approach significantly minimizes the total number of EALs that must be reviewed by the EAL-user for a given plant condition, reduces EAL-user reading burden and, thereby, speeds identification of the EAL that applies to the emergency.

- Within each group, assignment of EALs to categories and subcategories:

  Category and subcategory titles are selected to represent conditions that are operationally significant to the EAL-user. The Susquehanna EAL categories are aligned to and represent the NEI 99-01"Recognition Categories." Subcategories are used in the Susquehanna scheme as necessary to further divide the EALs of a category into logical sets of possible emergency classification thresholds. The Susquehanna EAL categories and subcategories are listed in Table 2.4-1.

  The primary tool for determining the emergency classification level is the EAL Classification Matrix. The bases provide the EAL user with the background and justification behind the EAL threshold values identified using the guidance set forth in NEI 99-01 Revision 6. If there is any doubt with regard to the applicability of any EAL, the technical basis should be reviewed. The user should consult Section 3.0 and Attachments 1 (EAL technical bases) & 2 (fission product barrier technical bases) of this document for such information.

Table 2.4-1 EAL Groups, Categories and Subcategories

EAL Group/Category	EAL Subcategory
All Operating Mode:	
R – Abnormal **R**ad Levels / Rad Effluent	1 – Radiological Effluent 2 – Irradiated Fuel Event 3 – Area Radiation Levels
H – **H**azards and Other Conditions Affecting Plant Safety	1 – Security 2 – Seismic Event 3 – Natural or Technological Hazard 4 – Fire 5 – Hazardous Gas 6 – Control Room Evacuation 7 – ED/RM Judgment
E – Independent Spent Fuel Storage Installation (ISFSI)	1 – Confinement Boundary
Hot Conditions:	
S – **S**ystem Malfunction	1 – Loss of Essential AC Power 2 – Loss of Vital DC Power 3 – Loss of Control Room Indications 4 – RCS Activity 5 – RCS Leakage 6 – RPS Failure 7 – Loss of Communications 8 – Hazardous Event Affecting Safety Systems
F – Fission Product Barrier Degradation	None
Cold Conditions:	
C – **C**old Shutdown / Refueling System Malfunction	1 – RPV Level 2 – Loss of Essential AC Power 3 – Loss of Vital DC Power 4 – RCS Temperature 5 – Loss of Communications 6 – Hazardous Event Affecting Safety Systems

2.5 Technical Bases Information

EAL technical bases are provided in Attachment 1 for each EAL according to EAL group (All, Hot, Cold), EAL category (R, C, H, S, F and E) and EAL subcategory. A summary explanation of each category and subcategory is given at the beginning of the technical bases discussions of the EALs included in the category. For each EAL, the following information is provided:

Category Letter & Title

Subcategory Number & Title

Initiating Condition (IC)

Site-specific description of the generic IC given in NEI 99-01 Rev. 6.

EAL Identifier (enclosed in rectangle)

Each EAL is assigned a unique identifier to support accurate communication of the emergency classification to onsite and offsite personnel. Four characters define each EAL identifier:

1. First character (letter): Corresponds to the EAL category as described above (R, C, H, S, F or E)
2. Second character (letter): The emergency classification (G, S, A or U)

   G = General Emergency
   S = Site Area Emergency
   A = Alert
   U = Unusual Event

3. Third character (number): Subcategory number within the given category. Subcategories are sequentially numbered beginning with the number one (1). If a category does not have a subcategory, this character is assigned the number one (1).
4. Fourth character (number): The numerical sequence of the EAL within the EAL subcategory. If the subcategory has only one EAL, it is given the number one (1).

Classification (enclosed in rectangle):

Unusual Event (U), Alert (A), Site Area Emergency (S) or General Emergency (G)

EAL (enclosed in rectangle)

Exact wording of the EAL as it appears in the EAL Classification Matrix

Mode Applicability

One or more of the following plant operating conditions comprise the mode to which each EAL is applicable: 1 - Power Operations, 2 - Startup, 3 - Hot Shutdown, 4 - Cold Shutdown, 5 - Refueling, D - Defueled, or All. (See Section 2.6 for operating mode definitions)

Definitions:

If the EAL wording contains a defined term, the definition of the term is included in this section. These definitions can also be found in Section 5.1. Defined terms used in Initiating Condition and Emergency Action Level statements are set in all capital letters (e.g., ALL CAPS).

Basis:

A basis section that provides Susquehanna-relevant information concerning the EAL. This section incorporates the basis that provides a description of the rationale for the EAL as provided in NEI 99-01 Rev. 6.

Susquehanna Basis Reference(s):

Site-specific source documentation from which the EAL is derived

2.6 Operating Mode Applicability (ref. 4.1.2 except Defueled)

1 Power Operation
Reactor is critical and the mode switch is in RUN

2 Startup
The mode switch is in REFUEL (with all reactor vessel head closure bolts fully tensioned) or STARTUP/HOT STANDBY

3 Hot Shutdown
The mode switch is in SHUTDOWN (with one or more reactor vessel head closure bolts less than fully tensioned) and average reactor coolant temperature is >200°F

4 Cold Shutdown
The mode switch is in SHUTDOWN (with one or more reactor vessel head closure bolts less than fully tensioned) and average reactor coolant temperature is ≤ 200°F

5 Refueling
The mode switch is in REFUEL or SHUTDOWN with one or more reactor vessel head closure bolts are less than fully tensioned

D Defueled
All fuel removed from the reactor vessel (i.e., full core offload during refueling or extended outage) (ref. 4.1.1)

The plant operating mode that exists at the time that the event occurs (prior to any protective system or operator action being initiated in response to the condition) should be compared to the mode applicability of the EALs. If a lower or higher plant operating mode is reached before the emergency classification is made, the declaration shall be based on the mode that existed at the time the event occurred.

3.0 GUIDANCE ON MAKING EMERGENCY CLASSIFICATIONS

3.1 General Considerations

When making an emergency classification, the Emergency Director/Recovery Manager must consider all information having a bearing on the proper assessment of an Initiating Condition (IC). This includes the Emergency Action Level (EAL) plus the associated Operating Mode Applicability, Notes, and the informing basis information. In the Recognition Category F matrices, EALs are based on loss or potential loss of Fission Product Barrier Thresholds.

3.1.1 Classification Timeliness

NRC regulations require the licensee to establish and maintain the capability to assess, classify, and declare an emergency condition within 15 minutes after the availability of indications to plant operators that an emergency action level has been exceeded and to promptly declare the emergency condition as soon as possible following identification of the appropriate emergency classification level. The NRC staff has provided guidance on implementing this requirement in NSIR/DPR-ISG-01, "Interim Staff Guidance, Emergency Planning for Nuclear Power Plants" (ref. 4.1.3) as follows:

1. The NRC considers the 15-minute criterion to commence when plant instrumentation, plant alarms, computer displays, or incoming verbal reports that correspond to an EAL first become available to any plant operator.

   - As used here, "plant operator" means any member of the plant staff who, by virtue of training and experience, is qualified to assess the indications or reports for validity and to compare the same to the EALs in the licensee's emergency classification scheme.

   - A "plant operator" may be, but need not be, a licensed operator or member of the ERO. "Plant operators" may be located in the CR or in another ERF in which emergency declarations are performed.

   - A "plant operator" does not encompass plant personnel such as chemists, radiation protection technicians, craft personnel, security personnel, and others whose positions require they report, rather than assess, abnormal conditions to the CR.

2. The 15-minute period encompasses all assessment, classification, and declaration actions associated with making an emergency declaration from the first availability of a plant indication or receipt of a report of an off-normal condition by plant operators up to and including the declaration of the emergency. If classifications and declarations are performed away from the CR, all delays incurred in transferring information from the CR (where the alarms, indications, and reports are first received) to the ERF (at which declarations are made) must be included within the 15-minute criterion.

3. Validation or confirmation of plant indications, or reports to the plant operators, is to be accomplished within the 15-minute period as part of the assessment. Since this validation or confirmation is being performed to determine the veracity of an alarm, indication, or report, the 15-minute period starts with the availability of the alarm,

indication, or report, and not the completion of the validation or confirmation, because the former is the time that the information was first available.

4. A small number of EAL thresholds are related to the results of analyses (e.g., dose assessments, chemistry sampling, and/or inspections) that are necessary to ascertain whether a numerical EAL threshold has been exceeded, rather than confirming or verifying an alarm or a received report. In most of these cases, the basis of the EAL will identify the analysis necessary and its scope.

- In these limited cases, the 15-minute declaration period starts with the availability of analysis results that show the threshold to be exceeded; this is the time that the information is first available.

- The NRC expects licensees to establish the capability to initiate and complete these analyses with a reasonable sense of urgency. For example, if a particular skill set is necessary to assess one or more EAL thresholds, that expertise should be available on-shift.

5. This 15-minute criterion ends as soon as the nuclear power reactor licensee determines that an EAL has been exceeded and upon identification of the appropriate ECL and when the licensee makes the emergency declaration. The final rule requires the licensee to promptly declare the emergency condition as soon as possible following the identification of the appropriate ECL. As used here, "promptly" means the next available opportunity unimpeded by activities not related to the emergency declaration, unless such activities are necessary for protecting health and safety. (See Paragraph 8 of this section.)

6. Consistent with the NRC's position that emergency declarations are made promptly, the final rule states that the 15-minute criterion not be construed as a grace period in which a licensee may attempt to restore plant conditions to avoid declaring an EAL that has already been exceeded. This statement does not preclude licensees from acting to correct or mitigate an off-normal condition, but once an EAL has been recognized as being exceeded, the emergency declaration shall be made promptly without waiting for the 15-minute period to elapse. This is particularly the case when the EAL threshold is exceeded based on occurrence of a condition, rather than the duration of a condition.

7. For EAL thresholds that specify a duration of the off-normal condition, the NRC expects that the emergency declaration process run concurrently with the specified threshold duration. Once the off-normal condition has existed for the duration specified in the EAL, no further effort on this declaration is necessary—the EAL has been exceeded. Consider as an example, the EAL "fire which is not extinguished within 15 minutes of detection." On receipt of a fire alarm, the plant fire brigade is dispatched to the scene to begin fire suppression efforts.

- If the fire brigade reports that the fire can be extinguished before the specified duration, the emergency declaration is placed on hold while firefighting activities continue. If the fire brigade is successful in extinguishing the fire within the specified duration from detection, no emergency declaration is warranted based on that EAL.

- If the fire is still burning after the specified duration has elapsed, the EAL is exceeded, no further assessment is necessary, and the emergency declaration would be made promptly. As used here, "promptly" means at the first available opportunity (e.g., if the Shift Manager is receiving an update from the fire brigade at the 15-minute mark, it is expected that the declaration will occur as the next action after the call ends).

- If, for example, the fire brigade notifies the shift supervision 5 minutes after detection that the brigade itself cannot extinguish the fire such that the EAL will be met imminently and cannot be avoided, the NRC would not consider it a violation of the licensee's emergency plan to declare the event before the EAL is met (e.g., the 15-minute duration has elapsed). While a prompt declaration would be beneficial to public health and safety and is encouraged, it is not required by regulation.

- In all of the above, the fire duration is measured from the time the alarm, indication, or report was first received by the plant operators. Validation or confirmation establishes that the fire started as early as the time of the alarm, indication, or report.

8. The final rule establishes a "capability" criterion rather than an inflexible "performance" criterion (e.g., "…shall maintain the capability to assess, classify, and declare an emergency condition within 15 minutes…"). As such, the 15-minute timeliness criterion should not be construed as limiting response actions that may be necessary to protect health and safety provided that the delay in declaration shall not deny the State and local authorities the opportunity to implement measures necessary to protect the public health and safety. The use of a capability criterion allows licensees some degree of flexibility during an actual radiological emergency to address extenuating circumstances in which a delay in emergency declaration beyond 15 minutes may be necessary. Such delays could be found compliant with the final rule during an actual emergency if the situation meets all of the following conditions:

- The delay has no significant impact on the implementation of adequate measures to protect the public health and safety.

- The delay was caused by a licensee actively performing another action immediately needed to protect the public health and safety such that a delay in declaration qualitatively represents the lesser risk.

- The cause of the delay was not reasonably within the licensee's ability to foresee and prevent.

- The delay did not deny OROs the opportunity to implement actions to protect the public health and safety.

3.1.2 Valid Indications

All emergency classification assessments shall be based upon valid indications, reports or conditions. A valid indication, report, or condition, is one that has been verified through appropriate means such that there is no doubt regarding the indicator's operability, the

condition's existence, or the report's accuracy. For example, verification could be accomplished through an instrument channel check, response on related or redundant indicators, or direct observation by plant personnel.

An indication, report, or condition is considered to be valid when it is verified by (1) an instrument channel check, or (2) indications on related or redundant indicators, or (3) by direct observation by plant personnel, such that doubt related to indicator operability, the condition existence, or the report accuracy is removed. Implicit in this definition is the need for timely assessment.

3.1.3 Imminent Conditions

For ICs and EALs that have a stipulated time duration (e.g., 15 minutes, 30 minutes, etc.), the Emergency Director/Recovery Manager should not wait until the applicable time has elapsed, but should declare the event as soon as it is determined that the condition has exceeded, or will likely exceed, the applicable time. If an ongoing radiological release is detected and the release start time is unknown, it should be assumed that the release duration specified in the IC/EAL has been exceeded, absent data to the contrary.

3.1.4 Planned vs. Unplanned Events

A planned work activity that results in an expected event or condition which meets or exceeds an EAL does not warrant an emergency declaration provided that: 1) the activity proceeds as planned, and 2) the plant remains within the limits imposed by the operating license. Such activities include planned work to test, manipulate, repair, maintain or modify a system or component. In these cases, the controls associated with the planning, preparation and execution of the work will ensure that compliance is maintained with all aspects of the operating license provided that the activity proceeds and concludes as expected. Events or conditions of this type may be subject to the reporting requirements of 10 § CFR 50.72 (ref. 4.1.4).

3.1.5 Classification Based on Analysis

The assessment of some EALs is based on the results of analyses that are necessary to ascertain whether a specific EAL threshold has been exceeded (e.g., dose assessments, chemistry sampling, RCS leak rate calculation, etc.). For these EALs, the EAL wording or the associated basis discussion will identify the necessary analysis. In these cases, the 15-minute declaration period starts with the availability of the analysis results that show the threshold to be exceeded (i.e., this is the time that the EAL information is first available). The NRC expects licensees to establish the capability to initiate and complete EAL-related analyses within a reasonable period of time (e.g., maintain the necessary expertise on-shift).

3.1.6 Emergency Director/Recovery Manager Judgment

While the EALs have been developed to address a full spectrum of possible events and conditions which may warrant emergency classification, a provision for classification based on operator/management experience and judgment is still necessary. The NEI 99-01 EAL scheme provides the Emergency Director/Recovery Manager with the ability to classify events and conditions based upon judgment using EALs that are consistent with the Emergency Classification Level (ECL) definitions (refer to Category H). The Emergency Director/Recovery Manager will need to determine if the effects or consequences of the event or condition reasonably meet or exceed a particular ECL definition. A similar provision is incorporated in the Fission Product Barrier Tables; judgment may be used to determine the status of a fission product barrier.

3.2 Classification Methodology

To make an emergency classification, the user will compare an event or condition (i.e., the relevant plant indications and reports) to an EAL(s) and determine if the EAL has been met or exceeded. The evaluation of an EAL must be consistent with the related Operating Mode Applicability and Notes. If an EAL has been met or exceeded, the associated IC is likewise met, the emergency classification process "clock" starts, and the ECL must be declared in accordance with plant procedures no later than fifteen minutes after the process "clock" started.

When assessing an EAL that specifies a time duration for the off-normal condition, the "clock" for the EAL time duration runs concurrently with the emergency classification process "clock." For a full discussion of this timing requirement, refer to NSIR/DPR-ISG-01 (ref. 4.1.3).

3.2.1 Classification of Multiple Events and Conditions

When multiple emergency events or conditions are present, the user will identify all met or exceeded EALs. The highest applicable ECL identified during this review is declared. For example:

- If an Alert EAL and a Site Area Emergency EAL are met, whether at one unit or at both units, a Site Area Emergency should be declared.

There is no "additive" effect from multiple EALs meeting the same ECL. For example:

- If two Alert EALs are met, whether at one unit or at both units, an Alert should be declared.

Related guidance concerning classification of rapidly escalating events or conditions is provided in Regulatory Issue Summary (RIS) 2007-02, *Clarification of NRC Guidance for Emergency Notifications During Quickly Changing Events* (ref. 4.1.5).

3.2.2 Consideration of Mode Changes During Classification

The mode in effect at the time that an event or condition occurred, and prior to any plant or operator response, is the mode that determines whether or not an IC is applicable. If an event or condition occurs, and results in a mode change before the emergency is declared, the emergency classification level is still based on the mode that existed at the time that the event or condition was initiated (and not when it was declared). Once a different mode is reached, any new event or condition, not related to the original event or condition, requiring emergency classification should be evaluated against the ICs and EALs applicable to the operating mode at the time of the new event or condition.

For events that occur in Cold Shutdown or Refueling, escalation is via EALs that are applicable in the Cold Shutdown or Refueling modes, even if Hot Shutdown (or a higher mode) is entered during the subsequent plant response. In particular, the fission product barrier EALs are applicable only to events that initiate in the Hot Shutdown mode or higher.

3.2.3 Classification of Imminent Conditions

Although EALs provide specific thresholds, the Emergency Director/Recovery Manager must remain alert to events or conditions that could lead to meeting or exceeding an EAL within a relatively short period of time (i.e., a change in the ECL is IMMINENT). If, in the judgment of the Emergency Director/Recovery Manager, meeting an EAL is IMMINENT, the emergency classification should be made as if the EAL has been met. While applicable to all emergency classification levels, this approach is particularly important at the higher emergency classification levels since it provides additional time for implementation of protective measures.

3.2.4 Emergency Classification Level Upgrading and Downgrading

An ECL may be downgraded when the event or condition that meets the highest IC and EAL no longer exists, and other site-specific downgrading requirements are met. If downgrading the ECL is deemed appropriate, the new ECL would then be based on a lower applicable IC(s) and EAL(s). The ECL may also simply be terminated.

As noted above, guidance concerning classification of rapidly escalating events or conditions is provided in RIS 2007-02 (ref. 4.1.5).

3.2.5 Classification of Short-Lived Events

Event-based ICs and EALs define a variety of specific occurrences that have potential or actual safety significance. By their nature, some of these events may be short-lived and, thus, over before the emergency classification assessment can be completed. If an event occurs that meets or exceeds an EAL, the associated ECL must be declared regardless of its continued presence at the time of declaration. Examples of such events include an earthquake or a failure of the reactor protection system to automatically scram the reactor followed by a successful manual scram.

3.2.6 Classification of Transient Conditions

Many of the ICs and/or EALs employ time-based criteria. These criteria will require that the IC/EAL conditions be present for a defined period of time before an emergency declaration is warranted. In cases where no time-based criterion is specified, it is recognized that some transient conditions may cause an EAL to be met for a brief period of time (e.g., a few seconds to a few minutes). The following guidance should be applied to the classification of these conditions.

<u>EAL momentarily met during expected plant response</u> - In instances where an EAL is briefly met during an expected (normal) plant response, an emergency declaration is not warranted provided that associated systems and components are operating as expected, and operator actions are performed in accordance with procedures.

<u>EAL momentarily met but the condition is corrected prior to an emergency declaration</u> – If an operator takes prompt manual action to address a condition, and the action is successful in correcting the condition prior to the emergency declaration, then the applicable EAL is not considered met and the associated emergency declaration is not required. For illustrative purposes, consider the following example:

> An ATWS occurs and the high pressure ECCS systems fail to automatically start. RPV level rapidly decreases and the plant enters an inadequate core cooling condition (a potential loss of both the fuel clad and RCS barriers). If an operator manually starts a high pressure ECCS system in accordance with an EOP step and clears the inadequate core cooling condition prior to an emergency declaration, then the classification should be based on the ATWS only.

It is important to stress that the 15-minute emergency classification assessment period (process clock) is not a "grace period" during which a classification may be delayed to allow the performance of a corrective action that would obviate the need to classify the event. Emergency classification assessments must be deliberate and timely, with no undue delays. The provision discussed above addresses only those rapidly evolving situations when an operator is able to take a successful corrective action prior to the Emergency Director/Recovery Manager

completing the review and steps necessary to make the emergency declaration. This provision is included to ensure that any public protective actions resulting from the emergency classification are truly warranted by the plant conditions.

3.2.7 After-the-Fact Discovery of an Emergency Event or Condition

In some cases, an EAL may be met but the emergency classification was not made at the time of the event or condition. This situation can occur when personnel discover that an event or condition existed which met an EAL, but no emergency was declared, and the event or condition no longer exists at the time of discovery. This may be due to the event or condition not being recognized at the time or an error that was made in the emergency classification process.

In these cases, no emergency declaration is warranted; however, the guidance contained in NUREG-1022 (ref. 4.1.6) is applicable. Specifically, the event should be reported to the NRC in accordance with 10 CFR § 50.72 (ref. 4.1.4) within one hour of the discovery of the undeclared event or condition. The licensee should also notify appropriate State and local agencies in accordance with the agreed upon arrangements.

3.2.8 Retraction of an Emergency Declaration

Guidance on the retraction of an emergency declaration reported to the NRC is discussed in NUREG-1022 (ref. 4.1.6).

4.0 REFERENCES

4.1 Developmental

4.1.1 NEI 99-01 Revision 6, Methodology for the Development of Emergency Action Levels for Non-Passive Reactors, ADAMS Accession Number ML12326A805

4.1.2 Technical Specifications Table 1.1-1 Modes

4.1.3 NSIR/DPR-ISG-01 Interim Staff Guidance, Emergency Planning for Nuclear Power Plants

4.1.4 10 § CFR 50.72 Immediate Notification Requirements for Operating Nuclear Power Reactors

4.1.5 RIS 2007-02 Clarification of NRC Guidance for Emergency Notifications During Quickly Changing Events, February 2, 2007

4.1.6 NUREG-1022 Event Reporting Guidelines: 10CFR50.72 and 50.73

4.1.7 NUH-003 Updated Final Safety Analysis Report for the Standardized NUHOMS® Horizontal Modular Storage System for Irradiated Nuclear Fuel, Section 1.3.1

4.1.8 NDAP-QA-0309 Primary Containment Access and Control

4.1.9 NDAP-QA-0321 Secondary Containment Integrity Control

4.1.10 Susquehanna LLC, Susquehanna Steam Electric Station Emergency Plan, Section 1.0, Definitions

4.1.11 10 § CFR 50.73 License Event Report System

4.1.12 ON-FPC-101(201) Loss of Fuel Pool Cooling

4.1.13 EO-000-104 Secondary Containment Control

4.1.14 FSAR Section 3.7a Seismic Design

4.2 Implementing

4.2.1 EP-PS-100 Emergency Director Control Room

4.2.2 EP-PS-101 TSC Emergency Director

4.2.3 EP-PS-200 Recovery Manager

4.2.4 NEI 99-01 Rev. 6 to Susquehanna EAL Comparison Matrix

5.0 DEFINITIONS, ACRONYMS & ABBREVIATIONS

5.1 Definitions (ref. 4.1.1 except as noted)

Selected defined terms used in Initiating Condition and Emergency Action Level statements are set in all capital letters (e.g., ALL CAPS). These words are defined terms that have specific meanings as used in this document. The definitions of these terms are provided below.

ALERT

Events are in progress or have occurred which involve an actual or potential substantial degradation of the level of safety of the plant or a security event that involves probable life threatening risk to site personnel or damage to site equipment because of HOSTILE ACTION. Any releases are expected to be limited to small fractions of the EPA PAG exposure levels.

CAN/CANNOT BE MAINTAINED ABOVE/BELOW

The value of an identified parameter is/is not able to be held within the specified limit. The determination requires an evaluation of system performance and availability in relation to parameter values and trends. An instruction prescribing action when a parameter cannot be maintained above or below a specified limit neither requires nor prohibits anticipatory action-depending upon plant conditions, the action may be taken as soon as it is determined that the limit will ultimately be exceeded, or delayed until the limit is actually reached. Once the parameter does exceed the limit, however, the action must be performed; it may not be delayed while attempts are made to restore the parameter to within the desired control band.

CAN/CANNOT BE RESTORED ABOVE/BELOW

The value of an identified parameter is/is not able to be brought within the specified limit. The determination requires an evaluation of system performance and availability in relation to parameter values and trends. An instruction prescribing action when a value CANNOT BE RESTORED AND MAINTAINED above or below a specified limit does not require immediate action simply because the current values is outside the range, but does not permit extended operation beyond the limit; the action must be taken as soon as it is apparent that the specified range cannot be attained.

CONFINEMENT BOUNDARY

The barrier(s) between spent fuel and the environment once the spent fuel is processed for dry storage. As related to the Susquehanna ISFSI, Confinement Boundary is defined as the Dry Shielded Canister (DSC) (Ref. 4.1.7).

CONTAINMENT CLOSURE

The procedurally defined conditions or actions taken to secure Primary or Secondary Containment and its associated structures, systems, and components as a functional barrier to fission product release under shutdown conditions.

As applied to Susquehanna, CONTAINMENT CLOSURE is established per NDAP-QA-0309 (ref 4.1.8) for Primary Containment OR is established per NDAP-QA-0321 (ref 4.1.9) for Secondary Containment.

EMERGENCY PLAN BOUNDARY (EPB) (ref. 4.1.10)

Same as the Exclusion Area Boundary, i.e., that area around SSES within a radius of 1800 feet determined in accordance with 10 CFR 100.11.

EMERGENCY ACTION LEVEL (EAL)

A pre-determined, site-specific, observable threshold for an Initiating Condition that, when met or exceeded, places the plant in a given emergency classification level.

EMERGENCY CLASSIFICATION LEVEL (ECL)

One of a set of names or titles established by the US Nuclear Regulatory Commission (NRC) for grouping off-normal events or conditions according to (1) potential or actual effects or consequences, and (2) resulting onsite and offsite response actions. The emergency classification levels, in ascending order of severity, are:

- Notification of Unusual Event (NOUE) - synonymous with Unusual Event (UE)
- Alert
- Site Area Emergency (SAE)
- General Emergency (GE)

EPA PAGs

Environment Protection Agency Protective Action Guidelines. The EPA PAGs are expressed in terms of dose commitment: 1 Rem TEDE or 5 Rem CDE Thyroid. Actual or projected offsite exposures in excess of the EPA PAGs require Susquehanna to recommend protective actions for the general public to offsite planning agencies.

The dose program complies with the "Manual of Protective Action Guides and Protective Actions for Nuclear Incidents," (EPA-400), adopting the dose calculation methodology I ICRP #26/30. The accident dose assessments are based on the adult physiology per EPA 400, except for one case – that is, child thyroid dose conversion factors are used in calculating thyroid CDE. However adult physiology is used in calculating thyroid CDE for purposes of evaluating the need for a sheltering only PAR and evaluating controlled venting of containment. Calculations of TEDE are made using the (adult) dose factors provided in EPA-400.

EXPLOSION

A rapid, violent and catastrophic failure of a piece of equipment due to combustion, chemical reaction or overpressurization. A release of steam (from high energy lines or components) or an electrical component failure (caused by short circuits, grounding, arcing, etc.) should not automatically be considered an explosion. Such events require a post-event inspection to determine if the attributes of an explosion are present.

FIRE

Combustion characterized by heat and light. Sources of smoke such as slipping drive belts or overheated electrical equipment do not constitute fires. Observation of flame is preferred but is NOT required if large quantities of smoke and heat are observed.

FISSION PRODUCT BARRIER THRESHOLD

A pre-determined, site-specific, observable threshold indicating the loss or potential loss of a fission product barrier.

FLOODING

A condition where water is entering a room or area faster than installed equipment is capable of removal, resulting in a rise of water level within the room or area.

GENERAL EMERGENCY

Events are in progress or have occurred which involve actual or IMMINENT substantial core degradation or melting with potential for loss of containment integrity or HOSTILE ACTION that results in an actual loss of physical control of the facility. Releases can be reasonably expected to exceed EPA PAG exposure levels offsite for more than the immediate site area.

HOSTAGE

A person(s) held as leverage against the station to ensure that demands will be met by the station.

HOSTILE ACTION

An act toward Susquehanna or its personnel that includes the use of violent force to destroy equipment, take hostages, and/or intimidate the licensee to achieve an end. This includes attack by air, land, or water using guns, explosives, projectiles, vehicles, or other devices used to deliver destructive force. Other acts that satisfy the overall intent may be included. Hostile action should not be construed to include acts of civil disobedience or felonious acts that are not part of a concerted attack on Susquehanna. Non-terrorism-based EALs should be used to address such activities (i.e., this may include violent acts between individuals in the OWNER CONTROLLED AREA).

HOSTILE FORCE

One or more individuals who are engaged in a determined assault, overtly or by stealth and deception, equipped with suitable weapons capable of killing, maiming, or causing destruction.

IMMINENT

The trajectory of events or conditions is such that an EAL will be met within a relatively short period of time regardless of mitigation or corrective actions.

INDEPENDENT SPENT FUEL STORAGE INSTALLATION (ISFSI)

A complex that is designed and constructed for the interim storage of spent nuclear fuel and other radioactive materials associated with spent fuel storage.

IMPEDE(D)

Personnel access to a room or area is hindered to an extent that extraordinary measures are necessary to facilitate entry of personnel into the affected room/area (e.g., requiring use of protective measures such as temporary shielding, SCBAs or dose extensions beyond Emergency Plan RWP that are not routinely employed to access the room/area).

INITIATING CONDITION (IC)

An event or condition that aligns with the definition of one of the four emergency classification levels by virtue of the potential or actual effects or consequences.

INTRUSION

The act of entering without authorization. Discovery of a bomb in a specified area is indication of intrusion into that area by a hostile force.

MAINTAIN

Take appropriate action to hold the value of an identified parameter within specified limits.

NORMAL LEVELS

As applied to radiological IC/EALs, the highest reading in the past twenty-four hours excluding the current peak value.

NOTIFICATION OF UNUSUAL EVENT - synonymous with Unusual Event (UE)

Events are in progress or have occurred which indicate a potential degradation of the level of safety of the plant or indicate a security threat to facility protection has been initiated. No releases of radioactive material requiring offsite response or monitoring are expected unless further degradation of SAFETY SYSTEMS occurs.

OPERATING BASIS EARTHQUAKE (OBE)

An earthquake which, considering the regional and local geology, and seismology and specific characteristics of local subsurface material, could reasonably be expected to affect the plant site during the operating life of the plant. It is that earthquake which produces the vibratory ground motion for which these features of the nuclear power plant necessary for continued operation without undue risk to the health and safety of the public are designed to remain functional (ref. 4.1.14).

OWNER CONTROLLED AREA (ref. 4.1.10)

Includes the area within the expanded security perimeter, i.e., the areas that are bordered by the Vehicle Barriers System. The OWNER CONTROLLED AREA also includes the Monitored OWNER CONTROLLED AREA (MOCA) as defined in Security Procedures.

PROJECTILE

An object directed toward a Nuclear Power Plant that could cause concern for its continued operability, reliability, or personnel safety.

PROTECTED AREA (ref. 4.1.10)

Area within the station inner security fence (PROTECTED AREA Barrier) designated to implement the requirements of 10 CFR 73.

RCS INTACT

The RCS should be considered intact when the RCS pressure boundary is in its normal condition for the cold shutdown mode of operation (e.g., no freeze seals). **REFUELING**

PATHWAY

The reactor refueling cavity, spent fuel pool and fuel transfer canal comprise the refueling pathway (ref. 4.1.12).

RESTORE

Take the appropriate action required to return the value of an identified parameter to the applicable limits

SAFETY SYSTEM

A system required for safe plant operation, cooling down the plant and/or placing it in the cold shutdown condition, including the ECCS. These are typically systems classified as safety-related (as defined in 10CFR50.2):

Those structures, systems and components that are relied upon to remain functional during and following design basis events to assure:

(1) The integrity of the reactor coolant pressure boundary;

(2) The capability to shut down the reactor and maintain it in a safe shutdown condition;

(3) The capability to prevent or mitigate the consequences of accidents which could result in potential offsite exposures.

SAFE SHUTDOWN EARTHQUAKE (SSE)

An earthquake which is based upon an evaluation of the maximum earthquake potential considering the regional and local geology, and seismology and specific characteristics of local subsurface material. It is that earthquake which produces the maximum vibratory ground motion for which Seismic Category I systems and components are designed to remain functional (ref 4.1.14).

SECURITY CONDITION

Any security event as listed in the approved security contingency plan that constitutes a threat/compromise to site security, threat/risk to site personnel, or a potential degradation to the level of safety of the plant. A SECURITY CONDITION does not involve a HOSTILE ACTION.

SITE AREA EMERGENCY

Events are in progress or have occurred which involve actual or likely major failures of plant functions needed for protection of the public or HOSTILE ACTION that results in intentional damage or malicious acts; 1) toward site personnel or equipment that could lead to the likely failure of or; 2) that prevent effective access to, equipment needed for the protection of the public. Any releases are not expected to result in exposure levels which exceed EPA PAG exposure levels beyond the SITE BOUNDARY.

SITE BOUNDARY

The line beyond which the land is not owned, leased or otherwise controlled by the licensee (Susquehanna drawing C243786, Sh 1, "Site Facilities and Boundary Map.") (ref. 4.1.10).

UNISOLABLE

An open or breached system line that cannot be isolated, remotely or locally.

- The term UNISOLABLE also includes any decision by plant staff or procedure direction to not isolate a primary system.
- Normal leakage past a closed isolation valve is not considered UNISOLABLE leakage.

UNPLANNED

A parameter change or an event that is not: 1) the result of an intended evolution, or 2) an expected plant response to a transient. The cause of the parameter change or event may be known or unknown.

VALID

An indication, report, or condition, is considered to be valid when it is verified by (1) an instrument channel check, or (2) indications on related or redundant indicators, or (3) by direct observation by plant personnel, such that doubt related to the indicator's operability, the condition's existence, or the report's accuracy is removed. Implicit in this definition is the need for timely assessment.

VISIBLE DAMAGE

Damage to a component or structure that is readily observable without measurements, testing, or analysis. The visual impact of the damage is sufficient to cause concern regarding the operability or reliability of the affected component or structure.

5.2 Abbreviations/Acronyms

°F ..... Degrees Fahrenheit
° ..... Degrees
AC ..... Alternating Current
AOP ..... Abnormal Operating Procedure
APRM ..... Average Power Range Meter
ATWS ..... Anticipated Transient Without Scram
BWR ..... Boiling Water Reactor
BWROG ..... Boiling Water Reactor Owners Group
CDE ..... Committed Dose Equivalent
CFR ..... Code of Federal Regulations
CS ..... Core Spray
DBA ..... Design Basis Accident
DC ..... Direct Current
EAL ..... Emergency Action Level
ECCS ..... Emergency Core Cooling System
ECL ..... Emergency Classification Level
ED ..... Emergency Director
EDST ..... Evaporator Distillate Sample Tank
EOF ..... Emergency Operations Facility
EOP ..... Emergency Operating Procedure
EPA ..... Environmental Protection Agency
EPB ..... Emergency Plan Boundary
EPG ..... Emergency Procedure Guideline
EPIP ..... Emergency Plan Implementing Procedure
ESF ..... Engineered Safety Feature
ESS ..... Engineered Safeguards System
FAA ..... Federal Aviation Administration
FBI ..... Federal Bureau of Investigation
FEMA ..... Federal Emergency Management Agency
FPRR ..... Fire Protection Review Report
FSAR ..... Final Safety Analysis Report
GE ..... General Emergency
HCTL ..... Heat Capacity Temperature Limit
HPCI ..... High Pressure Coolant Injection
IC ..... Initiating Condition
IPEEE ..... Individual Plant Examination of External Events (Generic Letter 88-20)
ISFSI ..... Independent Spent Fuel Storage Installation
K_{eff} ..... Effective Neutron Multiplication Factor
LCO ..... Limiting Condition of Operation

LER ..... Licensee Event Report
LOCA ..... Loss of Coolant Accident
LRW ..... Liquid Radwaste
LRW ..... Light Water Reactor
MPC ..... Maximum Permissible Concentration/Multi-Purpose Canister
MPH ..... Miles Per Hour
MSIV ..... Main Steam Isolation Valve
MSL ..... Main Steam Line
mR, mRem, mrem, mREM ..... milli-Roentgen Equivalent Man
MW ..... Megawatt
NEI ..... Nuclear Energy Institute
NESP ..... National Environmental Studies Project
NPP ..... Nuclear Power Plant
NRC ..... Nuclear Regulatory Commission
NSSS ..... Nuclear Steam Supply System
NORAD ..... North American Aerospace Defense Command
(NO)UE ..... Notification of Unusual Event
OBE ..... Operating Basis Earthquake
OCA ..... Owner Controlled Area
ODCM/ODAM ..... Off-site Dose Calculation (Assessment) Manual
ORO ..... Offsite Response Organization
PA ..... Protected Area
PRA/PSA ..... Probabilistic Risk Assessment / Probabilistic Safety Assessment
PWR ..... Pressurized Water Reactor
PSIG ..... Pounds per Square Inch Gauge
R ..... Roentgen
RB ..... Reactor Building
RCIC ..... Reactor Core Isolation Cooling
RCS ..... Reactor Coolant System
Rem, rem, REM ..... Roentgen Equivalent Man
RETS ..... Radiological Effluent Technical Specifications
RHR ..... Residual Heat Removal
RM ..... Recovery Manager
RPS ..... Reactor Protection System
RPV ..... Reactor Pressure Vessel
RRC ..... Reactor Recirculation
RWCU ..... Reactor Water Cleanup
SAR ..... Safety Analysis Report
SBO ..... Station Blackout
SCBA ..... Self-Contained Breathing Apparatus

SDHR ..... Supplemental Decay Heat Removal
SGTS ..... Stand-By Gas Treatment System
SPDS ..... Safety Parameter Display System
SRO ..... Senior Reactor Operator
SSE ..... Safe Shutdown Earthquake
SSES ..... Susquehanna Steam Electric Station
SW ..... Service Water
TEDE ..... Total Effective Dose Equivalent
TAF ..... Top of Active Fuel
TRM ..... Technical Requirements Manual
TSC ..... Technical Support Center

6.0 Susquehanna-TO-NEI 99-01 Rev. 6 EAL CROSS-REFERENCE

This cross-reference is provided to facilitate association and location of a Susquehanna EAL within the NEI 99-01 IC/EAL identification scheme. Further information regarding the development of the Susquehanna EALs based on the NEI guidance can be found in the EAL Comparison Matrix.

Susquehanna EAL	NEI 99-01 Rev. 6	
	IC	Example EAL
RU1.1	AU1	1, 2
RU1.2	AU1	3
RU2.1	AU2	1
RA1.1	AA1	1
RA1.2	AA1	2
RA1.3	AA1	3
RA1.4	AA1	4
RA2.1	AA2	1
RA2.2	AA2	2
RA2.3	AA2	3
RA3.1	AA3	1
RA3.2	AA3	2
RS1.1	AS1	1
RS1.2	AS1	2
RS1.3	AS1	3
RS2.1	AS2	1
RG1.1	AG1	1
RG1.2	AG1	2
RG1.3	AG1	3
RG2.1	AG2	1
CU1.1	CU1	1

Susquehanna EAL	NEI 99-01 Rev. 6	
	IC	Example EAL
CU1.2	CU1	2
CU2.1	CU2	1
CU3.1	CU4	1
CU4.1	CU3	1
CU4.2	CU3	2
CU4.1	CU4	1
CU5.1	CU5	1, 2, 3
CA1.1	CA1	1
CA1.2	CA1	2
CA2.1	CA2	1
CA4.1	CA3	1, 2
CA6.1	CA6	1
CS1.1	CS1	1
CS1.2	CS1	2
CS1.3	CS1	3
CG1.1	CG1	1
CG1.2	CG1	2
FA1.1	FA1	1
FS1.1	FS1	1
FG1.1	FG1	1
HU1.1	HU1	1, 2 3
HU2.1	HU2	1
HU3.1	HU3	1
HU3.2	HU3	2
HU3.3	HU3	3

Susquehanna EAL	NEI 99-01 Rev. 6	
	IC	Example EAL
HU3.4	HU3	4
N/A	HU3	5
HU4.1	HU4	1
HU4.2	HU4	2
HU4.3	HU4	3
HU4.4	HU4	4
HU7.1	HU7	1
HA1.1	HA1	1, 2
HA5.1	HA5	1
HA6.1	HA6	1
HA7.1	HA7	1
HS1.1	HS1	1
HS6.1	HS6	1
HS7.1	HS7	1
HG1.1	HG1	1
HG7.1	HG7	1
SU1.1	SU1	1
SU3.1	SU2	1
SU4.1	SU3	1
SU4.2	SU3	2
SU5.1	SU4	1, 2, 3
SU6.1	SU5	1
SU6.2	SU5	2
SU7.1	SU6	1, 2, 3
SA1.1	SA1	1

Susquehanna EAL	NEI 99-01 Rev. 6	
	IC	Example EAL
SA3.1	SA2	1
SA6.1	SA5	1
SA8.1	SA9	1
SS1.1	SS1	1
SS2.1	SS8	1
SS6.1	SS5	1
SG1.1	SG1	1
SG1.2	SG8	1
EU1.1	E-HU1	1

7.0 ATTACHMENTS

7.1 Attachment 1, Emergency Action Level Technical Bases

7.2 Attachment 2, Fission Product Barrier Matrix and Bases

7.3 Attachment 3, Safe Shutdown Room/Areas Tables R-2 & H-2 Bases

7.4 Attachment 4, Table R – Abnormal Rad Levels / Rad Effluents (Form EP-RM-004-R)

7.5 Attachment 5, Table E – ISFSI (Form EP-RM-004-E)

7.6 Attachment 6, Table H – Hazards (Form EP-RM-004-H)

7.7 Attachment 7, Table S – System Malfunctions (Form EP-RM-004-S)

7.8 Attachment 8, Table F – Fission Product Barrier Degradation (Form EP-RM-004-F)

7.9 Attachment 9, Table C – Cold Shutdown/Refueling System Malfunctions (Form EP-RM-004-C)

ATTACHMENT 1

Emergency Action Level Technical Bases

Category R – Abnormal Rad Release / Rad Effluent

EAL Group: ANY (EALs in this category are applicable to any plant condition, hot or cold.)

Many EALs are based on actual or potential degradation of fission product barriers because of the elevated potential for offsite radioactivity release. Degradation of fission product barriers though is not always apparent via non-radiological symptoms. Therefore, direct indication of elevated radiological effluents or area radiation levels are appropriate symptoms for emergency classification.

At lower levels, abnormal radioactivity releases may be indicative of a failure of containment systems or precursors to more significant releases. At higher release rates, offsite radiological conditions may result which require offsite protective actions. Elevated area radiation levels in the plant may also be indicative of the failure of containment systems or preclude access to plant vital equipment necessary to ensure plant safety.

Events of this category pertain to the following subcategories:

1. Radiological Effluent

   Direct indication of effluent radiation monitoring systems provides a rapid assessment mechanism to determine releases in excess of classifiable limits. Projected offsite doses, actual offsite field measurements or measured release rates via sampling indicate doses or dose rates above classifiable limits.

2. Irradiated Fuel Event

   Conditions indicative of a loss of adequate shielding or damage to irradiated fuel may preclude access to vital plant areas or result in radiological releases that warrant emergency classification.

3. Area Radiation Levels

   Sustained general area radiation levels which may preclude access to areas requiring continuous occupancy also warrant emergency classification.

Category: R – Abnormal Rad Levels / Rad Effluent

Subcategory: 1 – Radiological Effluent

Initiating Condition: Release of gaseous radioactivity resulting in offsite dose greater than 1,000 mrem TEDE or 5,000 mrem child thyroid CDE

EAL:

RG1.1 General Emergency

Gaseous effluent > Table R-1 column "GE" for ≥15 min. (Notes 1, 2, 3, 4)

Note 1: The ED/RM should declare the event promptly upon determining that time limit has been exceeded, or will likely be exceeded.

Note 2: If an ongoing release is detected and the release start time is unknown, assume that the release duration has exceeded the specified time limit.

Note 3: If the effluent flow past an effluent monitor is known to have stopped, indicating that the release path is isolated, the effluent monitor reading is no longer VALID for classification purposes.

Note 4: The pre-calculated effluent monitor values presented in EALs RA1.1, RS1.1 and RG1.1 should be used for emergency classification assessments until the results from a dose assessment using actual meteorology are available.

Table R-1 Effluent Monitor Classification Thresholds (Note 4)

	Release Point	Monitor	GE	SAE	Alert	UE
Gaseous	Plant Vent (noble gas)	0C630 0C677	1.9E+09 µCi/min (site total)	1.9E+08 µCi/min (site total)	1.9E+07 µCi/min (site total)	4.0E+06 µCi/min (site total)
Liquid	LRW	RR-06433	----	----	----	2 x hi alarm
Liquid	1(2) RHRSW A/B	RR-D12-1(2)R606	----	----	----	2 x hi alarm
Liquid	1(2) SW/SDHR	RR-D12-1(2)R606	----	----	----	2 x hi alarm

Mode Applicability:

All

Definition(s):

None

Basis:

This EAL address gaseous radioactivity releases, that for whatever reason, cause effluent radiation monitor readings corresponding to EMERGENCY PLAN BOUNDARY doses that exceed either (ref. 1):

- 1000 mrem TEDE
- 5000 mrem CDE Child Thyroid

The SITE BOUNDARY is irregularly shaped and therefore would result in dose projections and protective action recommendations that can vary significantly depending on plume direction and affected sector. Using dose projections calculated using the EPB (i.e. EXCLUSION AREA) provides a more consistent approach to Public Protective Action Recommendations since the EPB is more consistently defined in all directions. The EPB is at or within the SITE BOUNDARY in all compass sectors.

The EPA PAGs are expressed in terms of the projected sum of the effective dose equivalent (EDE) from external radiation and the committed effective dose equivalent (CEDE) incurred from inhalation of radioactive materials, or as the committed dose equivalent (CDE) to the thyroid. For the purpose of these IC/EALs, the projected dose quantity Total Effective Dose Equivalent (TEDE), as defined in 10 CFR 20 is used in lieu of "the projected sum of...EDE...and CEDE...", with CEDE considering significant dose from inhaled radionuclides during the early phase of the event. The EPA protective action guidance provides for the use of adult thyroid dose conversion factors. However, the Commonwealth of Pennsylvania requires the use of child thyroid CDE for purposes of comparison of projected thyroid CDE to the PAG for thyroid CDE.

The monitor reading threshold for RG1.1 was determined as described in ref. 1.

The column "GE" gaseous effluent release values in Table R-1 correspond to calculated doses of 100% of the EPA Protective Action Guidelines (TEDE or CDE child Thyroid). For multi-release point gaseous releases, classification should be based on dose assessment that considers the total site release rate.

The SPING monitors the radioactive effluent from the Units 1 and 2 Turbine Building and Reactor Building Ventilation Stacks and the Standby Gas Treatment System Exhaust Vent. All five collectively are the Plant Vent on Table R-1. The SPING system is normally aligned to be operated from Brother Control Terminals 0C630 in the Control Room, using 0C677 as a backup in the TSC. Three Post-Accident Vent Stack Sampling Systems (PAVSSS) have been installed as backup to the SPING Units. They are used following an accident involving fuel degradation if the SPING monitoring capabilities are lost. Control Terminal CT-1 with System Operator Console CT-1B interrogates each of the SPING and PAVSSS Radiation Monitors for particulate, iodine, and noble gases and informs the operator of changes in operational status, alarm condition, or system parameters within seconds of their occurrence. (ref. 2)

This IC addresses a release of gaseous radioactivity that results in projected or actual offsite doses greater than or equal to the EPA Protective Action Guides (PAGs). It includes both monitored and un-monitored releases. Releases of this magnitude will require implementation of protective actions for the public.

Radiological effluent EALs are also included to provide a basis for classifying events and

conditions that cannot be readily or appropriately classified on the basis of plant conditions alone. The inclusion of both plant condition and radiological effluent EALs more fully addresses the spectrum of possible accident events and conditions.

The TEDE dose is set at the EPA PAG of 1,000 mrem while the 5,000 mrem thyroid CDE was established in consideration of the 1:5 ratio of the EPA PAG for TEDE and thyroid CDE.

Classification based on effluent monitor readings assumes that a release path to the environment is established. If the effluent flow past an effluent monitor is known to have stopped due to actions to isolate the release path, then the effluent monitor reading is no longer valid for classification purposes.

Basis Reference(s):

1. NEP Technical Basis 02-005 Rev. #2 Noble Gas Release Rate Limits for EALs
2. FSAR 18.1.30 Accident-Monitoring Instrumentation
3. NEI 99-01 AG1

Category: R – Abnormal Rad Levels / Rad Effluent

Subcategory: 1 – Radiological Effluent

Initiating Condition: Release of gaseous radioactivity resulting in offsite dose greater than 1,000 mrem TEDE or 5,000 mrem child thyroid CDE

EAL:

RG1.2	**General Emergency**
Dose assessment using actual meteorology indicates doses > 1,000 mrem TEDE or 5,000 mrem child thyroid CDE at or beyond the EMERGENCY PLAN BOUNDARY (Note 4)	

Note 4: The pre-calculated effluent monitor values presented in EALs RA1.1, RS1.1 and RG1.1 should be used for emergency classification assessments until the results from a dose assessment using actual meteorology are available.

Mode Applicability:

All

Definition(s):

EMERGENCY PLAN BOUNDARY (EPB) - Same as the Exclusion Area Boundary, i.e., that area around SSES within a radius of 1800 feet determined in accordance with 10 CFR 100.11

Basis:

Dose assessments are performed by computer-based methods (ref. 2).

The EMERGENCY PLAN BOUNDARY (EPB) is used in assessing dose effects to the public rather than the SITE BOUNDARY. The EPB is at or within the SITE BOUNDARY in all compass sectors. The SSES dose projection model (MIDAS) utilizes the EPB when performing dose calculations (ref. 5).

The SITE BOUNDARY is irregularly shaped and therefore would result in dose projections and protective action recommendations that can vary significantly depending on plume direction and affected sector. Using dose projections calculated using the EPB (i.e. Exclusion Area) provides a more consistent approach to Public Protective Action Recommendations since the EPB is more consistently defined in all directions. The EPB is at or within the SITE BOUNDARY in all compass sectors.

The EPA PAGs are expressed in terms of the projected sum of the effective dose equivalent (EDE) from external radiation and the committed effective dose equivalent (CEDE) incurred from inhalation of radioactive materials, or as the committed dose equivalent (CDE) to the thyroid. For the purpose of these IC/EALs, the projected dose quantity Total Effective Dose Equivalent (TEDE), as defined in 10 CFR 20 is used in lieu of "the projected sum of...EDE...and CEDE...", with CEDE considering significant dose from inhaled radionuclides during the early phase of the event. The EPA protective action guidance provides for the use of adult thyroid dose conversion factors. However, the Commonwealth of Pennsylvania requires the use of

child thyroid CDE for purposes of comparison of projected thyroid CDE to the PAG for thyroid CDE.

Since dose assessment is based on actual meteorology, whereas the monitor reading RG1.1 is not, the results from these assessments may indicate that the classification is not warranted. For this reason, emergency implementing procedures call for the timely performance of dose assessments using actual meteorology and release information. If the results of these dose assessments are available when the classification is made (e.g., initiated at a lower classification level), the dose assessment results override the monitor reading RG1.1. Classification should not be delayed pending the results of these dose assessments.

This IC addresses a release of gaseous radioactivity that results in projected or actual offsite doses greater than or equal to the EPA Protective Action Guides (PAGs). It includes both monitored and un-monitored releases. Releases of this magnitude will require implementation of protective actions for the public.

Radiological effluent EALs are also included to provide a basis for classifying events and conditions that cannot be readily or appropriately classified on the basis of plant conditions alone. The inclusion of both plant condition and radiological effluent EALs more fully addresses the spectrum of possible accident events and conditions.

The TEDE dose is set at the EPA PAG of 1,000 mrem while the 5,000 mrem thyroid CDE was established in consideration of the 1:5 ratio of the EPA PAG for TEDE and thyroid CDE. Classification based on effluent monitor readings assumes that a release path to the environment is established. If the effluent flow past an effluent monitor is known to have stopped due to actions to isolate the release path, then the effluent monitor reading is no longer valid for classification purposes.

Basis Reference(s):

1. Susquehanna LLC, Susquehanna Steam Electric Stations Emergency Plan, Section 7.1.1, Off Site Dose Calculations
2. EP-RM-005 SSES MIDAS-NU User Manual
3. NEI 99-01 AG1

Category: R – Abnormal Rad Levels / Rad Effluent

Subcategory: 1 – Radiological Effluent

Initiating Condition: Release of gaseous radioactivity resulting in offsite dose greater than 1,000 mrem TEDE or 5,000 mrem child thyroid CDE

EAL:

RG1.3 General Emergency

Field survey results indicate **EITHER** of the following at or beyond the EMERGENCY PLAN BOUNDARY:

- Closed window dose rates > 1,000 mR/hr expected to continue for ≥60 min.
- Analyses of field survey samples indicate child thyroid CDE > 5,000 mrem for 60 min. of inhalation.

(Notes 1, 2)

Note 1: The ED/RM should declare the event promptly upon determining that time limit has been exceeded, or will likely be exceeded.

Note 2: If an ongoing release is detected and the release start time is unknown, assume that the release duration has exceeded the specified time limit.

Mode Applicability:

All

Definition(s):

EMERGENCY PLAN BOUNDARY (EPB) - Same as the Exclusion Area Boundary, i.e., that area around SSES within a radius of 1800 feet determined in accordance with 10 CFR 100.11

Basis:

The EMERGENCY PLAN BOUNDARY (EPB) is used in assessing dose effects to the public rather than the SITE BOUNDARY. The EPB is at or within the SITE BOUNDARY in all compass sectors. The SSES dose projection model (MIDAS) utilizes the EPB when performing dose calculations (ref. 1).

The SITE BOUNDARY is irregularly shaped and therefore would result in dose projections and protective action recommendations that can vary significantly depending on plume direction and affected sector. Using dose projections calculated using the EPB (i.e. EXCLUSION AREA) provides a more consistent approach to Public Protective Action Recommendations since the EPB is more consistently defined in all directions. The EPB is at or within the SITE BOUNDARY in all compass sectors.

The EPA PAGs are expressed in terms of the projected sum of the effective dose equivalent (EDE) from external radiation and the committed effective dose equivalent (CEDE) incurred from inhalation of radioactive materials, or as the committed dose equivalent (CDE) to the thyroid. For the purpose of these IC/EALs, the projected dose quantity Total Effective Dose

Equivalent (TEDE), as defined in 10 CFR 20 is used in lieu of "the projected sum of...EDE...and CEDE...", with CEDE considering significant dose from inhaled radionuclides during the early phase of the event. The EPA protective action guidance provides for the use of adult thyroid dose conversion factors. However, the Commonwealth of Pennsylvania requires the use of child thyroid CDE for purposes of comparison of projected thyroid CDE to the PAG for thyroid CDE.

This IC addresses a release of gaseous radioactivity that results in projected or actual offsite doses greater than or equal to the EPA Protective Action Guides (PAGs). It includes both monitored and un-monitored releases. Releases of this magnitude will require implementation of protective actions for the public.

Radiological effluent EALs are also included to provide a basis for classifying events and conditions that cannot be readily or appropriately classified on the basis of plant conditions alone. The inclusion of both plant condition and radiological effluent EALs more fully addresses the spectrum of possible accident events and conditions.

The TEDE dose is set at the EPA PAG of 1,000 mrem while the 5,000 mrem thyroid CDE was established in consideration of the 1:5 ratio of the EPA PAG for TEDE and thyroid CDE.

Basis Reference(s):

1. EP-RM-005 SSES MIDAS-NU User Manual
2. NEI 99-01 AG1

Category: R – Abnormal Rad Levels / Rad Effluent

Subcategory: 1 – Radiological Effluent

Initiating Condition: Release of gaseous radioactivity resulting in offsite dose greater than 100 mrem TEDE or 500 mrem child thyroid CDE

EAL:

RS1.1 Site Area Emergency

Gaseous effluent > Table R-1 column "SAE" for ≥15 min. (Notes 1, 2, 3, 4)

Note 1: The ED/RM should declare the event promptly upon determining that time limit has been exceeded, or will likely be exceeded.

Note 2: If an ongoing release is detected and the release start time is unknown, assume that the release duration has exceeded the specified time limit.

Note 3: If the effluent flow past an effluent monitor is known to have stopped, indicating that the release path is isolated, the effluent monitor reading is no longer VALID for classification purposes.

Note 4: The pre-calculated effluent monitor values presented in EALs RA1.1, RS1.1 and RG1.1 should be used for emergency classification assessments until the results from a dose assessment using actual meteorology are available.

Table R-1 Effluent Monitor Classification Thresholds (Note 4)

	Release Point	Monitor	GE	SAE	Alert	UE
Gaseous	Plant Vent (noble gas)	0C630 0C677	1.9E+09 µCi/min (site total)	1.9E+08 µCi/min (site total)	1.9E+07 µCi/min (site total)	4.0E+06 µCi/min (site total)
Liquid	LRW	RR-06433	----	----	----	2 x hi alarm
Liquid	1(2) RHRSW A/B	RR-D12-1(2)R606	----	----	----	2 x hi alarm
Liquid	1(2) SW/SDHR	RR-D12-1(2)R606	----	----	----	2 x hi alarm

Mode Applicability:

All

Definition(s):

None

Basis:

This EAL address gaseous radioactivity releases, that for whatever reason, cause effluent radiation monitor readings corresponding to EMERGENCY PLAN BOUNDARY (EPB) doses that exceed either (ref. 1):

- 100 mrem TEDE
- 500 mrem CDE Child Thyroid

The SITE BOUNDARY is irregularly shaped and therefore would result in dose projections and protective action recommendations that can vary significantly depending on plume direction and affected sector. Using dose projections calculated using the EPB (i.e. EXCLUSION AREA) provides a more consistent approach to Public Protective Action Recommendations since the EPB is more consistently defined in all directions. The EPB is at or within the SITE BOUNDARY in all compass sectors.

The EPA PAGs are expressed in terms of the projected sum of the effective dose equivalent (EDE) from external radiation and the committed effective dose equivalent (CEDE) incurred from inhalation of radioactive materials, or as the committed dose equivalent (CDE) to the thyroid. For the purpose of these IC/EALs, the projected dose quantity Total Effective Dose Equivalent (TEDE), as defined in 10 CFR 20 is used in lieu of "the projected sum of...EDE...and CEDE...", with CEDE considering significant dose from inhaled radionuclides during the early phase of the event. The EPA protective action guidance provides for the use of adult thyroid dose conversion factors. However, the Commonwealth of Pennsylvania requires the use of child thyroid CDE for purposes of comparison of projected thyroid CDE to the PAG for thyroid CDE.

The monitor reading threshold for RS1.1 was determined as described in ref. 1.

The column "SAE" gaseous effluent release values in Table R-1 correspond to calculated doses of 10% of the EPA Protective Action Guidelines (TEDE or CDE child Thyroid). For multi-release point gaseous releases, classification should be based on dose assessment that considers the total site release rate.

The SPING monitors the radioactive effluent from the Units 1 and 2 Turbine Building and Reactor Building Ventilation Stacks and the Standby Gas Treatment System Exhaust Vent. All five collectively are the Plant Vent on Table R-1. The SPING system is normally aligned to be operated from Brother Control Terminals 0C630 in the Control Room, using 0C677 as a backup in the TSC. Three Post-Accident Vent Stack Sampling Systems (PAVSSS) have been installed as backup to the SPING Units. They are used following an accident involving fuel degradation if the SPING monitoring capabilities are lost. Control Terminal CT-1 with System Operator Console CT-1B interrogates each of the SPING and PAVSSS Radiation Monitors for particulate, iodine, and noble gases and informs the operator of changes in operational status, alarm condition, or system parameters within seconds of their occurrence. (ref. 2)

This IC addresses a release of gaseous radioactivity that results in projected or actual offsite doses greater than or equal to 10% of the EPA Protective Action Guides (PAGs). It includes both monitored and un-monitored releases. Releases of this magnitude are associated with the failure of plant systems needed for the protection of the public.

Radiological effluent EALs are also included to provide a basis for classifying events and

conditions that cannot be readily or appropriately classified on the basis of plant conditions alone. The inclusion of both plant condition and radiological effluent EALs more fully addresses the spectrum of possible accident events and conditions.

The TEDE dose is set at 10% of the EPA PAG of 1,000 mrem while the 500 mrem thyroid CDE was established in consideration of the 1:5 ratio of the EPA PAG for TEDE and thyroid CDE.

Classification based on effluent monitor readings assumes that a release path to the environment is established. If the effluent flow past an effluent monitor is known to have stopped due to actions to isolate the release path, then the effluent monitor reading is no longer valid for classification purposes.

Escalation of the emergency classification level would be via IC RG1.

Basis Reference(s):

1. NEP Technical Basis 02-005 Rev. #2 Noble Gas Release Rate Limits for EALs
2. FSAR 18.1.30 Accident-Monitoring Instrumentation
3. NEI 99-01 AS1

Category: R – Abnormal Rad Levels / Rad Effluent

Subcategory: 1 – Radiological Effluent

Initiating Condition: Release of gaseous radioactivity resulting in offsite dose greater than 100 mrem TEDE or 500 mrem child thyroid CDE

EAL:

RS1.2	**Site Area Emergency**
Dose assessment using actual meteorology indicates doses > 100 mrem TEDE or 500 mrem child thyroid CDE at or beyond the EMERGENCY PLAN BOUNDARY (Note 4)	

Note 4: The pre-calculated effluent monitor values presented in EALs RA1.1, RS1.1 and RG1.1 should be used for emergency classification assessments until the results from a dose assessment using actual meteorology are available.

Mode Applicability:

All

Definition(s):

EMERGENCY PLAN BOUNDARY (EPB) - Same as the Exclusion Area Boundary, i.e., that area around SSES within a radius of 1800 feet determined in accordance with 10 CFR 100.11

Basis:

Dose assessments are performed by computer-based methods (ref. 2).

The EMERGENCY PLAN BOUNDARY (EPB) is used in assessing dose effects to the public rather than the SITE BOUNDARY. The EPB is at or within the SITE BOUNDARY in all compass sectors. The SSES dose projection model (MIDAS) utilizes the EPB when performing dose calculations (ref. 5).

The SITE BOUNDARY is irregularly shaped and therefore would result in dose projections and protective action recommendations that can vary significantly depending on plume direction and affected sector. Using dose projections calculated using the EPB (i.e. Exclusion Area) provides a more consistent approach to Public Protective Action Recommendations since the EPB is more consistently defined in all directions. The EPB is at or within the SITE BOUNDARY in all compass sectors.

The EPA PAGs are expressed in terms of the projected sum of the effective dose equivalent (EDE) from external radiation and the committed effective dose equivalent (CEDE) incurred from inhalation of radioactive materials, or as the committed dose equivalent (CDE) to the thyroid. For the purpose of these IC/EALs, the projected dose quantity Total Effective Dose Equivalent (TEDE), as defined in 10 CFR 20 is used in lieu of "the projected sum of...EDE...and CEDE...", with CEDE considering significant dose from inhaled radionuclides during the early phase of the event. The EPA protective action guidance provides for the use of adult thyroid dose conversion factors. However, the Commonwealth of Pennsylvania requires the use of

child thyroid CDE for purposes of comparison of projected thyroid CDE to the PAG for thyroid CDE.

Since dose assessment is based on actual meteorology, whereas the monitor reading RS1.1 is not, the results from these assessments may indicate that the classification is not warranted. For this reason, emergency implementing procedures call for the timely performance of dose assessments using actual meteorology and release information. If the results of these dose assessments are available when the classification is made (e.g., initiated at a lower classification level), the dose assessment results override the monitor reading RS1.1. Classification should not be delayed pending the results of these dose assessments.

This IC addresses a release of gaseous radioactivity that results in projected or actual offsite doses greater than or equal to 10% of the EPA Protective Action Guides (PAGs). It includes both monitored and un-monitored releases. Releases of this magnitude are associated with the failure of plant systems needed for the protection of the public.

Radiological effluent EALs are also included to provide a basis for classifying events and conditions that cannot be readily or appropriately classified on the basis of plant conditions alone. The inclusion of both plant condition and radiological effluent EALs more fully addresses the spectrum of possible accident events and conditions.

The TEDE dose is set at 10% of the EPA PAG of 1,000 mrem while the 500 mrem thyroid CDE was established in consideration of the 1:5 ratio of the EPA PAG for TEDE and thyroid CDE.

Classification based on effluent monitor readings assumes that a release path to the environment is established. If the effluent flow past an effluent monitor is known to have stopped due to actions to isolate the release path, then the effluent monitor reading is no longer valid for classification purposes.

Escalation of the emergency classification level would be via IC RG1.

Basis Reference(s):

1. Susquehanna LLC, Susquehanna Steam Electric Stations Emergency Plan, Section 7.1.1, Off Site Dose Calculations
2. EP-RM-005 SSES MIDAS-NU User Manual
3. NEI 99-01 AS1

Category: R – Abnormal Rad Levels / Rad Effluent

Subcategory: 1 – Radiological Effluent

Initiating Condition: Release of gaseous radioactivity resulting in offsite dose greater than 100 mrem TEDE or 500 mrem child thyroid CDE

EAL:

RS1.3 Site Area Emergency

Field survey results indicate **EITHER** of the following at or beyond the EMERGENCY PLAN BOUNDARY:

- Closed window dose rates > 100 mR/hr expected to continue for ≥60 min.
- Analyses of field survey samples indicate child thyroid CDE > 500 mrem for 60 min. of inhalation.

(Notes 1, 2)

Note 1: The ED/RM should declare the event promptly upon determining that time limit has been exceeded, or will likely be exceeded.

Note 2: If an ongoing release is detected and the release start time is unknown, assume that the release duration has exceeded the specified time limit.

Mode Applicability:

All

Definition(s):

EMERGENCY PLAN BOUNDARY (EPB) - Same as the Exclusion Area Boundary, i.e., that area around SSES within a radius of 1800 feet determined in accordance with 10 CFR 100.11.

Basis:

The EMERGENCY PLAN BOUNDARY (EPB) is used in assessing dose effects to the public rather than the SITE BOUNDARY. The EPB is at or within the SITE BOUNDARY in all compass sectors. The SSES dose projection model (MIDAS) utilizes the EPB when performing dose calculations (ref. 1).

The SITE BOUNDARY is irregularly shaped and therefore would result in dose projections and protective action recommendations that can vary significantly depending on plume direction and affected sector. Using dose projections calculated using the EPB (i.e. EXCLUSION AREA) provides a more consistent approach to Public Protective Action Recommendations since the EPB is more consistently defined in all directions. The EPB is at or within the SITE BOUNDARY in all compass sectors

The EPA PAGs are expressed in terms of the projected sum of the effective dose equivalent (EDE) from external radiation and the committed effective dose equivalent (CEDE) incurred from inhalation of radioactive materials, or as the committed dose equivalent (CDE) to the thyroid. For the purpose of these IC/EALs, the projected dose quantity Total Effective Dose Equivalent (TEDE), as defined in 10 CFR 20 is used in lieu of "the projected sum of...EDE...and

CEDE...", with CEDE considering significant dose from inhaled radionuclides during the early phase of the event. The EPA protective action guidance provides for the use of adult thyroid dose conversion factors. However, the Commonwealth of Pennsylvania requires the use of child thyroid CDE for purposes of comparison of projected thyroid CDE to the PAG for thyroid CDE.

Since dose assessment is based on actual meteorology, whereas the monitor reading RS1.1 is not, the results from these assessments may indicate that the classification is not warranted. For this reason, emergency implementing procedures call for the timely performance of dose assessments using actual meteorology and release information. If the results of these dose assessments are available when the classification is made (e.g., initiated at a lower classification level), the dose assessment results override the monitor reading RS1.1. Classification should not be delayed pending the results of these dose assessments.

This IC addresses a release of gaseous radioactivity that results in projected or actual offsite doses greater than or equal to 10% of the EPA Protective Action Guides (PAGs). It includes both monitored and un-monitored releases. Releases of this magnitude are associated with the failure of plant systems needed for the protection of the public.

Radiological effluent EALs are also included to provide a basis for classifying events and conditions that cannot be readily or appropriately classified on the basis of plant conditions alone. The inclusion of both plant condition and radiological effluent EALs more fully addresses the spectrum of possible accident events and conditions.

The TEDE dose is set at 10% of the EPA PAG of 1,000 mrem while the 500 mrem thyroid CDE was established in consideration of the 1:5 ratio of the EPA PAG for TEDE and thyroid CDE.

Escalation of the emergency classification level would be via IC RG1.

Basis Reference(s):

1. EP-RM-005 SSES MIDAS-NU User Manual
2. NEI 99-01 AS1

Category: R – Abnormal Rad Levels / Rad Effluent

Subcategory: 1 – Radiological Effluent

Initiating Condition: Release of gaseous or liquid radioactivity resulting in offsite dose greater than 10 mrem TEDE or 50 mrem child thyroid CDE

EAL:

RA1.1 Alert

Gaseous effluent > Table R-1 column "Alert" for ≥15 min. (Notes 1, 2, 3, 4)

Note 1: The ED/RM should declare the event promptly upon determining that time limit has been exceeded, or will likely be exceeded.

Note 2: If an ongoing release is detected and the release start time is unknown, assume that the release duration has exceeded the specified time limit.

Note 3: If the effluent flow past an effluent monitor is known to have stopped, indicating that the release path is isolated, the effluent monitor reading is no longer VALID for classification purposes.

Note 4 The pre-calculated effluent monitor values presented in EALs RA1.1, RS1.1 and RG1.1 should be used for emergency classification assessments until the results from a dose assessment using actual meteorology are available.

Table R-1 Effluent Monitor Classification Thresholds (Note 4)

	Release Point	Monitor	GE	SAE	Alert	UE
Gaseous	Plant Vent (noble gas)	0C630 0C677	1.9E+09 µCi/min (site total)	1.9E+08 µCi/min (site total)	1.9E+07 µCi/min (site total)	4.0E+06 µCi/min (site total)
Liquid	LRW	RR-06433	----	----	----	2 x hi alarm
Liquid	1(2) RHRSW A/B	RR-D12-1(2)R606	----	----	----	2 x hi alarm
Liquid	1(2) SW/SDHR	RR-D12-1(2)R604	----	----	----	2 x hi alarm

Mode Applicability:

All

Definition(s):

None

Basis:

This EAL address gaseous radioactivity releases, that for whatever reason, cause effluent radiation monitor readings corresponding to EMERGENCY PLAN BOUNDARY (EPB) doses that exceed either (ref. 1):

- 10 mrem TEDE
- 50 mrem CDE Child Thyroid

The SITE BOUNDARY is irregularly shaped and therefore would result in dose projections and protective action recommendations that can vary significantly depending on plume direction and affected sector. Using dose projections calculated using the EPB (i.e. Exclusion Area) provides a more consistent approach to Public Protective Action Recommendations since the EPB is more consistently defined in all directions. The EPB is at or within the SITE BOUNDARY in all compass sectors.

The EPA PAGs are expressed in terms of the projected sum of the effective dose equivalent (EDE) from external radiation and the committed effective dose equivalent (CEDE) incurred from inhalation of radioactive materials, or as the committed dose equivalent (CDE) to the thyroid. For the purpose of these IC/EALs, the projected dose quantity Total Effective Dose Equivalent (TEDE), as defined in 10 CFR 20 is used in lieu of "the projected sum of...EDE...and CEDE...", with CEDE considering significant dose from inhaled radionuclides during the early phase of the event. The EPA protective action guidance provides for the use of adult thyroid dose conversion factors. However, the Commonwealth of Pennsylvania requires the use of child thyroid CDE for purposes of comparison of projected thyroid CDE to the PAG for thyroid CDE.

The monitor reading threshold for RA1.1 was determined as described in ref. 1.

The column "ALERT" gaseous effluent release value in Table R-1 correspond to calculated doses of 1% (10% of the SAE thresholds) of the EPA Protective Action Guidelines (TEDE or CDE Thyroid). For multi-release point gaseous releases, classification should be based on dose assessment that considers the total site release rate.

The SPING monitors the radioactive effluent from the Units 1 and 2 Turbine Building and Reactor Building Ventilation Stacks and the Standby Gas Treatment System Exhaust Vent. All five collectively are the Plant Vent on Table R-1. The SPING system is normally aligned to be operated from Brother Control Terminals 0C630 in the Control Room, using 0C677 as a backup in the TSC. Three Post-Accident Vent Stack Sampling Systems (PAVSSS) have been installed as backup to the SPING Units. They are used following an accident involving fuel degradation if the SPING monitoring capabilities are lost. Control Terminal CT-1 with System Operator Console CT-1B interrogates each of the SPING and PAVSSS Radiation Monitors for particulate, iodine, and noble gases and informs the operator of changes in operational status, alarm condition, or system parameters within seconds of their occurrence. (ref. 2)

This IC addresses a release of gaseous or liquid radioactivity that results in projected or actual offsite doses greater than or equal to 1% of the EPA Protective Action Guides (PAGs). It includes both monitored and un-monitored releases. Releases of this magnitude represent an actual or potential substantial degradation of the level of safety of the plant as indicated by a radiological release that significantly exceeds regulatory limits (e.g., a significant uncontrolled release).

Radiological effluent EALs are also included to provide a basis for classifying events and conditions that cannot be readily or appropriately classified on the basis of plant conditions alone. The inclusion of both plant condition and radiological effluent EALs more fully addresses the spectrum of possible accident events and conditions.

The TEDE dose is set at 1% of the EPA PAG of 1,000 mrem while the 50 mrem thyroid CDE was established in consideration of the 1:5 ratio of the EPA PAG for TEDE and thyroid CDE.

Classification based on effluent monitor readings assumes that a release path to the environment is established. If the effluent flow past an effluent monitor is known to have stopped due to actions to isolate the release path, then the effluent monitor reading is no longer valid for classification purposes.

Escalation of the emergency classification level would be via IC RS1.

Basis Reference(s):

1. NEP Technical Basis 02-005 Rev. #2 Noble Gas Release Rate Limits for EALs
2. FSAR 18.1.30 Accident-Monitoring Instrumentation
4. NEI 99-01 AA1

Category: R – Abnormal Rad Levels / Rad Effluent

Subcategory: 1 – Radiological Effluent

Initiating Condition: Release of gaseous or liquid radioactivity resulting in offsite dose greater than 10 mrem TEDE or 50 mrem child thyroid CDE

EAL:

RA1.2	**Alert**
Dose assessment using actual meteorology indicates doses > 10 mrem TEDE or 50 mrem child thyroid CDE at or beyond the EMERGENCY PLAN BOUNDARY (Note 4)	

Note 4: The pre-calculated effluent monitor values presented in EALs RA1.1, RS1.1 and RG1.1 should be used for emergency classification assessments until the results from a dose assessment using actual meteorology are available.

Mode Applicability:

All

Definition(s):

EMERGENCY PLAN BOUNDARY (EPB) - Same as the Exclusion Area Boundary, i.e., that area around SSES within a radius of 1800 feet determined in accordance with 10 CFR 100.11.

Basis:

Dose assessments are performed by computer-based methods (ref. 2).

The EMERGENCY PLAN BOUNDARY (EPB) is used in assessing dose effects to the public rather than the SITE BOUNDARY. The EPB is at or within the SITE BOUNDARY in all compass sectors. The SSES dose projection model (MIDAS) utilizes the EPB when performing dose calculations (ref. 5).

The SITE BOUNDARY is irregularly shaped and therefore would result in dose projections and protective action recommendations that can vary significantly depending on plume direction and affected sector. Using dose projections calculated using the EPB (i.e. Exclusion Area) provides a more consistent approach to Public Protective Action Recommendations since the EPB is more consistently defined in all directions. The EPB is at or within the SITE BOUNDARY in all compass sectors.

The EPA PAGs are expressed in terms of the projected sum of the effective dose equivalent (EDE) from external radiation and the committed effective dose equivalent (CEDE) incurred from inhalation of radioactive materials, or as the committed dose equivalent (CDE) to the thyroid. For the purpose of these IC/EALs, the projected dose quantity Total Effective Dose Equivalent (TEDE), as defined in 10 CFR 20 is used in lieu of "the projected sum of...EDE...and CEDE...", with CEDE considering significant dose from inhaled radionuclides during the early phase of the event. The EPA protective action guidance provides for the use of adult thyroid dose conversion factors. However, the Commonwealth of Pennsylvania requires the use of child thyroid CDE for purposes of comparison of projected thyroid CDE to the PAG for thyroid CDE.

Since dose assessment is based on actual meteorology, whereas the monitor reading RA1.1 is not, the results from these assessments may indicate that the classification is not warranted. For this reason, emergency implementing procedures call for the timely performance of dose assessments using actual meteorology and release information. If the results of these dose assessments are available when the classification is made (e.g., initiated at a lower classification level), the dose assessment results override the monitor reading RA1.1. Classification should not be delayed pending the results of these dose assessments.

This IC addresses a release of gaseous or liquid radioactivity that results in projected or actual offsite doses greater than or equal to 1% of the EPA Protective Action Guides (PAGs). It includes both monitored and un-monitored releases. Releases of this magnitude represent an actual or potential substantial degradation of the level of safety of the plant as indicated by a radiological release that significantly exceeds regulatory limits (e.g., a significant uncontrolled release).

Radiological effluent EALs are also included to provide a basis for classifying events and conditions that cannot be readily or appropriately classified on the basis of plant conditions alone. The inclusion of both plant condition and radiological effluent EALs more fully addresses the spectrum of possible accident events and conditions.

The TEDE dose is set at 1% of the EPA PAG of 1,000 mrem while the 50 mrem thyroid CDE was established in consideration of the 1:5 ratio of the EPA PAG for TEDE and thyroid CDE.

Classification based on effluent monitor readings assumes that a release path to the environment is established. If the effluent flow past an effluent monitor is known to have stopped due to actions to isolate the release path, then the effluent monitor reading is no longer valid for classification purposes.

Escalation of the emergency classification level would be via IC RS1.

Basis Reference(s):

1. Susquehanna LLC, Susquehanna Steam Electric Stations Emergency Plan, Section 7.1.1, Off Site Dose Calculations

2. EP-RM-005 SSES MIDAS-NU User Manual
3. NEI 99-01 AA1

Category: R – Abnormal Rad Levels / Rad Effluent

Subcategory: 1 – Radiological Effluent

Initiating Condition: Release of gaseous or liquid radioactivity resulting in offsite dose greater than 10 mrem TEDE or 50 mrem child thyroid CDE

EAL:

RA1.3	**Alert**
Analysis of a liquid effluent sample indicates a concentration or release rate that would result in doses > 10 mrem TEDE or 50 mrem child thyroid CDE at or beyond the EMERGENCY PLAN BOUNDARY for 60 min. of exposure (Notes 1, 2)	

Note 1: The ED/RM should declare the event promptly upon determining that time limit has been exceeded, or will likely be exceeded.

Note 2: If an ongoing release is detected and the release start time is unknown, assume that the release duration has exceeded the specified time limit.

Mode Applicability:

All

Definition(s):

EMERGENCY PLAN BOUNDARY (EPB) - Same as the Exclusion Area Boundary, i.e., that area around SSES within a radius of 1800 feet determined in accordance with 10 CFR 100.11.

Basis:

RA1.3 addresses uncontrolled releases that are detected by sample analyses, particularly on unmonitored pathways, e.g., spills of radioactive liquids into storm drains, heat exchanger leakage in river water systems, etc.

For a radiological liquid release, the calculated effluent concentration from a chemistry sample is compared to the emergency action level. Shift Management utilizes emergency response procedures to notify risk counties and to obtain river water samples.

The Susquehanna station incorporates features intended to control the release of radioactive effluents to the environment. Further, there are administrative controls established to prevent unintentional releases, or control and monitor intentional releases. These controls are located in the Technical Requirements Manual (TRM). The occurrence of extended, uncontrolled radioactive releases to the environment is indicative of degradation in these features and/or controls.

EAL RA1.3 addresses uncontrolled releases that are detected by sample analyses, particularly on unmonitored pathways, e.g., spills of radioactive liquids into storm drains, heat exchanger leakage in river water systems, etc. This EAL reflects the concern that releases in excess of the referenced offsite dose values represent an uncontrolled situation and hence a potential degradation in the level of safety. Although the calculated dose is very low, it is the degradation in plant control as indicated by the failure to terminate the release that is of primary concern.

The EMERGENCY PLAN BOUNDARY is referenced in EAL RA1.3 because this EAL is based upon liquid release limits from the plant. The release limits are contained in the TRM and are in turn based upon calculation methodology specified in the ODCM. The ODCM utilizes the EMERGENCY PLAN BOUNDARY to establish plant release limits.

This IC addresses a release of gaseous or liquid radioactivity that results in projected or actual offsite doses greater than or equal to 1% of the EPA Protective Action Guides (PAGs). It includes both monitored and un-monitored releases. Releases of this magnitude represent an actual or potential substantial degradation of the level of safety of the plant as indicated by a radiological release that significantly exceeds regulatory limits (e.g., a significant uncontrolled release).

Radiological effluent EALs are also included to provide a basis for classifying events and conditions that cannot be readily or appropriately classified on the basis of plant conditions alone. The inclusion of both plant condition and radiological effluent EALs more fully addresses the spectrum of possible accident events and conditions.

The TEDE dose is set at 1% of the EPA PAG of 1,000 mrem while the 50 mrem thyroid CDE was established in consideration of the 1:5 ratio of the EPA PAG for TEDE and thyroid CDE. Escalation of the emergency classification level would be via IC RS1.

Basis Reference(s):

1. ODCM-QA-003 Effluent Monitor Setpoints
2. NEI 99-01 AA1

Category: R – Abnormal Rad Levels / Rad Effluent

Subcategory: 1 – Radiological Effluent

Initiating Condition: Release of gaseous or liquid radioactivity resulting in offsite dose greater than 10 mrem TEDE or 50 mrem child thyroid CDE

EAL:

RA1.4 Alert

Field survey results indicate **EITHER** of the following at or beyond the EMERGENCY PLAN BOUNDARY:

- Closed window dose rates > 10 mR/hr expected to continue for ≥60 min.
- Analyses of field survey samples indicate child thyroid CDE > 50 mrem for 60 min. of inhalation.

(Notes 1, 2)

Note 1: The ED/RM should declare the event promptly upon determining that time limit has been exceeded, or will likely be exceeded.

Note 2: If an ongoing release is detected and the release start time is unknown, assume that the release duration has exceeded the specified time limit.

Mode Applicability:

All

Definition(s):

EMERGENCY PLAN BOUNDARY (EPB) - Same as the Exclusion Area Boundary, i.e., that area around SSES within a radius of 1800 feet determined in accordance with 10 CFR 100.11

Basis:

The EMERGENCY PLAN BOUNDARY (EPB) is used in assessing dose effects to the public rather than the SITE BOUNDARY. The EPB is at or within the SITE BOUNDARY in all compass sectors. The SSES dose projection model (MIDAS) utilizes the EPB when performing dose calculations (ref. 1).

The SITE BOUNDARY is irregularly shaped and therefore would result in dose projections and protective action recommendations that can vary significantly depending on plume direction and affected sector. Using dose projections calculated using the EPB (i.e. Exclusion Area) provides a more consistent approach to Public Protective Action Recommendations since the EPB is more consistently defined in all directions. The EPB is at or within the SITE BOUNDARY in all compass sectors.

The EPA PAGs are expressed in terms of the projected sum of the effective dose equivalent (EDE) from external radiation and the committed effective dose equivalent (CEDE) incurred from inhalation of radioactive materials, or as the committed dose equivalent (CDE) to the thyroid. For the purpose of these IC/EALs, the projected dose quantity Total Effective Dose

Equivalent (TEDE), as defined in 10 CFR 20 is used in lieu of "the projected sum of...EDE...and CEDE...", with CEDE considering significant dose from inhaled radionuclides during the early phase of the event. The EPA protective action guidance provides for the use of adult thyroid dose conversion factors. However, the Commonwealth of Pennsylvania requires the use of child thyroid CDE for purposes of comparison of projected thyroid CDE to the PAG for thyroid CDE.

This IC addresses a release of gaseous or liquid radioactivity that results in projected or actual offsite doses greater than or equal to 1% of the EPA Protective Action Guides (PAGs). It includes both monitored and un-monitored releases. Releases of this magnitude represent an actual or potential substantial degradation of the level of safety of the plant as indicated by a radiological release that significantly exceeds regulatory limits (e.g., a significant uncontrolled release).

Radiological effluent EALs are also included to provide a basis for classifying events and conditions that cannot be readily or appropriately classified on the basis of plant conditions alone. The inclusion of both plant condition and radiological effluent EALs more fully addresses the spectrum of possible accident events and conditions.

The TEDE dose is set at 1% of the EPA PAG of 1,000 mrem while the 50 mrem thyroid CDE was established in consideration of the 1:5 ratio of the EPA PAG for TEDE and thyroid CDE.

Classification based on effluent monitor readings assumes that a release path to the environment is established. If the effluent flow past an effluent monitor is known to have stopped due to actions to isolate the release path, then the effluent monitor reading is no longer valid for classification purposes.

Escalation of the emergency classification level would be via IC RS1.

Basis Reference(s):

1. EP-RM-005 SSES MIDAS-NU User Manual
2. NEI 99-01 AA1

Category: R – Abnormal Rad Levels / Rad Effluent

Subcategory: 1 – Radiological Effluent

Initiating Condition: Release of gaseous or liquid radioactivity greater than 2 times the TRM limits for 60 minutes or longer

EAL:

RU1.1 Unusual Event

Gaseous or liquid effluent > Table R-1 column "UE" for ≥60 min. (Notes 1, 2, 3)

Note 1: The ED/RM should declare the event promptly upon determining that time limit has been exceeded, or will likely be exceeded.

Note 2: If an ongoing release is detected and the release start time is unknown, assume that the release duration has exceeded the specified time limit.

Note 3: If the effluent flow past an effluent monitor is known to have stopped, indicating that the release path is isolated, the effluent monitor reading is no longer VALID for classification purposes.

Table R-1 Effluent Monitor Classification Thresholds

	Release Point	Monitor	GE	SAE	Alert	UE
Gaseous	Plant Vent (noble gas)	0C630 0C677	1.9E+09 µCi/min (site total)	1.9E+08 µCi/min (site total)	1.9E+07 µCi/min (site total)	4.0E+06 µCi/min (site total)
Liquid	LRW	RR-06433	----	----	----	2 x hi alarm
Liquid	1(2) RHRSW A/B	RR-D12-1(2)R606	----	----	----	2 x hi alarm
Liquid	1(2) SW/SDHR	RR-D12-1(2)R604	----	----	----	2 x hi alarm

Mode Applicability:

All

Definition(s):

None

Basis:

The EMERGENCY PLAN BOUNDARY is used in RU1.1 because it is based upon release limits from the plant. The release limits are based upon the Plant Technical Requirements Manual and in turn based upon calculation methodology specified in the ODCM. The ODCM utilizes the

EMERGENCY PLAN BOUNDARY to establish plant release limits. EAL RU1.1 is an indication of degradation in the level of safety of the plant.

This EAL represents radioactivity releases, that for whatever reason, cause liquid effluent radiation monitor readings to exceed two times the Technical Requirements Manual limit and releases are not terminated within 60 minutes. This alarm setpoint may be associated with a planned batch release, or a continuous release path. In either case, the setpoint is established by the ODCM to warn of a release that is not in compliance with the applicable TRM release limit. Indexing the EAL threshold to the ODCM setpoints in this manner ensures that the EAL threshold will never be less than the setpoint established by a specific discharge permit.

For a radiological liquid release, the calculated effluent concentration from a chemistry sample is compared to the emergency action level. Shift Management utilizes emergency response procedures to notify risk counties and to obtain river water samples.

Gaseous Releases

The column "UE" gaseous release value in Table R-1 represents two times the appropriate TRM release rate limits (ref. 1-3).

The SPING monitors the radioactive effluent from the Units 1 and 2 Turbine Building and Reactor Building Ventilation Stacks and the Standby Gas Treatment System Exhaust Vent. All five collectively are the Plant Vent on Table R-1. The SPING system is normally aligned to be operated from Brother Control Terminals 0C630 in the Control Room, using 0C677 as a backup in the TSC. Three Post-Accident Vent Stack Sampling Systems (PAVSSS) have been installed as backup to the SPING Units. They are used following an accident involving fuel degradation if the SPING monitoring capabilities are lost. Control Terminal CT-1 with System Operator Console CT-1B interrogates each of the SPING and PAVSSS Radiation Monitors for particulate, iodine, and noble gases and informs the operator of changes in operational status, alarm condition, or system parameters within seconds of their occurrence. (ref. 4)

Liquid Releases

The column "UE" liquid release values in Table R-1 represent two times the appropriate TRM release rate limits associated with the specified release point (ref. 5-9).

- LRW

  A sample pump takes a portion of the LRW effluent line flow and passes it through a scintillation detector (RE-06433). The contents of EDST, the LRW sample tanks, or the laundry drain sample tank can be lined up for release. Release flow is through two isolation valves, HV-06432A1 and A2 to the cooling tower blowdown line.

  The isolation valves will close on:

  - Low Sample Flow (< 0.5 gpm)
  - Low Blowdown Flow (< 5500 gpm)
  - High radiation (calculated for each release based on sample)
  - Rad Monitor downscale (calculated)
  - Rad Monitor inoperable

- RHRSW

  The Residual Heat Removal (RHR) Service Water RMS detects primary coolant leakage into the RHR Service Water during RHR Heat Exchanger operation. Local indication of RHR Service Water Loop 'A' radiation is provided by RITS-11216A and RHR Service Water Loop 'B' by RITS-11216B. Output is also sent to Control Room alarms and Radiation Recorder RR-D12-1R606 on Panel 1C600. The following RHR Service Water RMS high radiation annunciators are located on Control Room Panel 1C601: RHR SW A HI RADIATION (AR-109-F01) is actuated at a setpoint determined by Chemistry.

- RHR SW B HI RADIATION (AR-113-F01) is actuated at a setpoint determined by Chemistry.

- SW/SDHR

  Service Water/Supplemental Decay Heat Removal RMS detects radioactive material in-leakage to the service water system from the spent fuel pool heat exchangers. During unit outages when SDHR is placed in service, the SDHR Detector is connected to the Radiation Monitoring Unit in place of the Service Water Detector.

  The Service Water/Supplemental Decay Heat Removal RMS annunciator SERVICE WATER EFFLUENT HI RADIATION (AR-123-D04) setpoint is variable as determined by Chemistry Group.

This IC addresses a potential decrease in the level of safety of the plant as indicated by a low-level radiological release that exceeds regulatory commitments for an extended period of time (e.g., an uncontrolled release). It includes any gaseous or liquid radiological release, monitored or un-monitored, including those for which a radioactivity discharge permit is normally prepared.

Nuclear power plants incorporate design features intended to control the release of radioactive effluents to the environment. Further, there are administrative controls established to prevent unintentional releases, and to control and monitor intentional releases. The occurrence of an extended, uncontrolled radioactive release to the environment is indicative of degradation in these features and/or controls.

Radiological effluent EALs are also included to provide a basis for classifying events and conditions that cannot be readily or appropriately classified on the basis of plant conditions alone. The inclusion of both plant condition and radiological effluent EALs more fully addresses the spectrum of possible accident events and conditions.

Classification based on effluent monitor readings assumes that a release path to the environment is established. If the effluent flow past an effluent monitor is known to have stopped due to actions to isolate the release path, then the effluent monitor reading is no longer valid for classification purposes.

Releases should not be prorated or averaged. For example, a release exceeding 4 times release limits for 30 minutes does not meet the EAL.

This EAL addresses normally occurring continuous radioactivity releases from monitored gaseous or liquid effluent pathways. EAL Bases Escalation of the emergency classification level would be via IC RA1.

Basis Reference(s):

1. TRM 3.3.4 TRM Post-Accident Monitoring Instrumentation
2. TRM 3.11.2 Gaseous Effluents
3. Susquehanna Calculation EC ENVR 1041 Airborne Effluent Limiting Site Release Rate & Plant Vent Effluent Monitor Setpoints
4. FSAR 18.1.30 Accident-Monitoring Instrumentation
5. OP-179-002 Process Radiation Monitoring System
6. FSAR 9.2 Water Systems
7. TRM 3.11.1.4 Liquid Radwaste Effluent Monitoring Instrumentation
8. TRM 3.11.1.5 Radioactive Liquid Process Monitoring Instrumentation
9. ON-069-001 Abnormal Rad Release Liquid
10. SSES Offsite Dose Calculation Manual
11. NEI 99-01 AU1

Category: R – Abnormal Rad Levels / Rad Effluent

Subcategory: 1 – Radiological Effluent

Initiating Condition: Release of gaseous or liquid radioactivity greater than 2 times the TRM limits for 60 minutes or longer.

EAL:

RU1.2	**Unusual Event**
Sample analysis for a gaseous or liquid release indicates a concentration or release rate > 2 x TRM limits for ≥60 min. (Notes 1, 2)	

Note 1: The ED/RM should declare the event promptly upon determining that time limit has been exceeded, or will likely be exceeded.

Note 2: If an ongoing release is detected and the release start time is unknown, assume that the release duration has exceeded the specified time limit.

Mode Applicability:

All

Definition(s):

None

Basis:

For a radiological liquid release, the calculated effluent concentration from a chemistry sample is compared to the emergency action level. Shift Management utilizes emergency response procedures to notify risk counties and to obtain river water samples.

Limits associated with liquid and gaseous radioactive effluents are contained in the Technical Requirements Manual (TRM). The methodology for calculation of offsite dose or release rates to ensure compliance with the applicable TRM limits is outlined in the ODCM.

EAL RU1.2 addresses radioactivity releases, that for whatever reason, cause effluent radiation monitor readings to exceed two times the applicable TRM limit and are not terminated within 60 minutes. The effluent monitor alarm setpoints are established by the ODCM to warn of a release that is not in compliance with the applicable TRM limit (ref.1). The ODCM establishes a methodology for determining effluent radiation monitor setpoints. The ODCM specifies default source terms and, for gaseous releases, prescribes the use of pre-determined annual average meteorology in the most limiting downwind sector for showing compliance with the regulatory commitments. The fundamental basis of this IC is NOT a dose or dose rate, but rather the degradation in the level of safety of the plant implied by the uncontrolled release

EAL RU1.2 includes any release for which a radioactivity discharge permit was not prepared or not applicable, or a release that exceeds the conditions (e.g., minimum dilution flow, maximum discharge flow, alarm setpoints, etc.) on the applicable permit. Although the calculated dose is very low, it is the degradation in plant control as indicated by the failure to terminate the release that is of primary concern.

This IC addresses a potential decrease in the level of safety of the plant as indicated by a low-level radiological release that exceeds regulatory commitments for an extended period of time (e.g., an uncontrolled release). It includes any gaseous or liquid radiological release, monitored or un-monitored, including those for which a radioactivity discharge permit is normally prepared.

Nuclear power plants incorporate design features intended to control the release of radioactive effluents to the environment. Further, there are administrative controls established to prevent unintentional releases, and to control and monitor intentional releases. The occurrence of an extended, uncontrolled radioactive release to the environment is indicative of degradation in these features and/or controls.

Radiological effluent EALs are also included to provide a basis for classifying events and conditions that cannot be readily or appropriately classified on the basis of plant conditions alone. The inclusion of both plant condition and radiological effluent EALs more fully addresses the spectrum of possible accident events and conditions.

Releases should not be prorated or averaged. For example, a release exceeding 4 times release limits for 30 minutes does not meet the EAL. This EAL addresses uncontrolled gaseous or liquid releases that are detected by sample analyses or environmental surveys, particularly on unmonitored pathways (e.g., spills of radioactive liquids into storm drains, heat exchanger leakage in river water systems, etc.).

Escalation of the emergency classification level would be via IC RA1.

Basis Reference(s):

1. ODCM-QA-003 Effluent Monitor Setpoints
2. NEI 99-01 AU1

Category: R – Abnormal Rad Levels / Rad Effluent

Subcategory: 2 – Irradiated Fuel Event

Initiating Condition: Spent fuel pool level cannot be restored to at least the top of the spent fuel racks for 60 minutes or longer

EAL:

RG2.1	**General Emergency**
Spent fuel pool level **CANNOT** BE RESTORED to at least 0.5 ft. above the top of the spent fuel racks for ≥60 min. (Note 1)	

Note 1: The ED/RM should declare the event promptly upon determining that time limit has been exceeded, or will likely be exceeded.

Mode Applicability:

All

Definition(s):

None

Basis:

Each fuel storage pool is designed to maintain the water level in the pool above the top of active fuel providing cooling for the fuel rods. Technical Specifications require greater than or equal to 22 ft. of water be maintained over the top of irradiated fuel assemblies seated in the spent fuel storage racks at all times (ref. 1). In the event of loss of fuel pool inventory, Operations will assess multiple indications in accordance with ON-FPC-101(201) and AOP-081-001 (ref. 3, 4).

Post-Fukushima order EA-12-051 required the installation of reliable SFP level indication capable of identifying normal SPF level 22.75 feet above the top of the fuel racks (Level 1 or el. 817'-1"), SFP level 10 ft. above the top of the fuel racks (Level 2 or el. 804'-4") and SFP level at the top of the fuel racks (Level 3 or el. 794'-10" which for SSES is 0.5 feet on instrument above the top of the fuel racks). Each spent fuel pool is equipped with primary and backup guided wave radar probes to measure pool level. The range is continuous from the high pool level elevation (23.25 feet on instrument or el. 817'-7") to the top of the spent fuel racks (0.0 feet on instrument or el. 794'-4") (ref. 2).

Each new SFP LI system provides two alarms to the associated Unit's Control Room Benchboard. The first alarm identifies a low water level condition at 20 ft. (instrument) above the spent fuel rack (elevation 814'-4"). The second alarm identifies a low low water level condition at 10 ft. (instrument) above the spent fuel rack (Level 2 or elevation 804'-4"). These alarms are intended to alert the control room operators of the loss of SFP inventory so actions are taken to provide make-up as soon as possible (ref. 2).

This IC addresses a significant loss of spent fuel pool inventory control and makeup capability leading to a prolonged uncovery of spent fuel. This condition will lead to fuel damage and a radiological release to the environment.

It is recognized that this IC would likely not be met until well after another General Emergency IC was met; however, it is included to provide classification diversity.

Basis Reference(s):

1. Technical Specifications 3.7.7 Spent Fuel Storage Pool Water Level
2. PLA-6980 Enclosure 1 Susquehanna Units 1 & 2 Overall Integrated Plan with Regard to Reliable Spent Fuel Pool Instrumentation
3. ON-FPC-101(201) Loss of Fuel Pool Cooling
4. AOP-081-001 Fuel Handling Abnormal Operating Procedure
5. NEI 99-01 AG2

Category: R – Abnormal Rad Levels / Rad Effluent

Subcategory: 2 – Irradiated Fuel Event

Initiating Condition: Spent fuel pool level at the top of the fuel racks

EAL:

RS2.1 Site Area Emergency

Lowering of spent fuel pool level to ≤ 0.5 ft. above the top of the spent fuel racks

Mode Applicability:

All

Definition(s):

None

Basis:

Each fuel storage pool is designed to maintain the water level in the pool above the top of active fuel providing cooling for the fuel rods. Technical Specifications require greater than or equal to 22 ft. of water be maintained over the top of irradiated fuel assemblies seated in the spent fuel storage racks at all times (ref. 1). In the event of loss of fuel pool inventory, Operations will assess multiple indications in accordance with ON-FPC-101(201) and AOP-081-001 (ref. 3, 4).

Post-Fukushima order EA-12-051 required the installation of reliable SFP level indication capable of identifying normal SPF level 22.75 feet above the top of the fuel racks (Level 1 or el. 817'-1"), SFP level 10 ft. above the top of the fuel racks (Level 2 or el. 804'-4") and SFP level at the top of the fuel racks (Level 3 or el. 794'-10" which for SSES is 0.5 feet on instrument above the top of the fuel racks). Each spent fuel pool is equipped with primary and backup guided wave radar probes to measure pool level. The range is continuous from the high pool level elevation (23.25 feet on instrument or el. 817'-7") to the top of the spent fuel racks (0.0 feet on instrument or el. 794'-4") (ref. 2).

Each new SFP LI system provides two alarms to the associated Unit's Control Room Benchboard. The first alarm identifies a low water level condition at 20 ft. (instrument) above the spent fuel rack (elevation 814'-4"). The second alarm identifies a low low water level condition at 10 ft. (instrument) above the spent fuel rack (Level 2 or elevation 804'-4"). These alarms are intended to alert the control room operators of the loss of SFP inventory so actions are taken to provide make-up as soon as possible (ref. 2).

This IC addresses a significant loss of spent fuel pool inventory control and makeup capability leading to IMMINENT fuel damage. This condition entails major failures of plant functions needed for protection of the public and thus warrant a Site Area Emergency declaration.

It is recognized that this IC would likely not be met until well after another Site Area Emergency IC was met; however, it is included to provide classification diversity.

Escalation of the emergency classification level would be via IC RG1 or RG2.

Basis Reference(s):

1. Technical Specifications 3.7.7 Spent Fuel Storage Pool Water Level
2. PLA-6980 Enclosure 1 Susquehanna Units 1 & 2 Overall Integrated Plan with Regard to Reliable Spent Fuel Pool Instrumentation
3. ON-FPC-101(201) Loss of Fuel Pool Cooling
4. AOP-081-001 Fuel Handling Abnormal Operating Procedure
5. NEI 99-01 AA2

Category: R – Abnormal Rad Levels / Rad Effluent

Subcategory: 2 – Irradiated Fuel Event

Initiating Condition: Significant lowering of water level above, or damage to, irradiated fuel

EAL:

RA2.1	**Alert**
Uncovery of irradiated fuel in the REFUELING PATHWAY	

Mode Applicability:

All

Definition(s):

REFUELING PATHWAY-. The reactor refueling cavity, spent fuel pool and fuel transfer canal comprise the refueling pathway.

Basis:

This EAL applies to all instances of irradiated fuel handling, including those that are not directly in support of a reactor refueling outage. (e.g. unit-to-unit fuel shuffles, dry fuel storage canister loading, etc.).

Each fuel storage pool is designed to maintain the water level in the pool above the top of active fuel providing cooling for the fuel rods. Technical Specifications require greater than or equal to 22 feet of water be maintained over the top of irradiated fuel assemblies seated in the spent fuel storage racks at all times (ref. 1). In the event of loss of fuel pool inventory, Operations will assess multiple indications in accordance with ON-FPC-101(201) and AOP-081-001 (ref. 3, 4).

This IC addresses events that have caused imminent or actual damage to an irradiated fuel assembly, or a significant lowering of water level within the spent fuel pool. These events present radiological safety challenges to plant personnel and are precursors to a release of radioactivity to the environment. As such, they represent an actual or potential substantial degradation of the level of safety of the plant.

This EAL escalates from RU2.1 in that the loss of level, in the affected portion of the REFUELING PATHWAY, is of sufficient magnitude to have resulted in uncovery of irradiated fuel. Indications of irradiated fuel uncovery may include direct or indirect visual observation (e.g., reports from personnel or camera images), as well as significant changes in water and radiation levels, or other plant parameters. Computational aids may also be used (e.g., a boil-off curve). Classification of an event using this EAL should be based on the totality of available indications, reports and observations.

While an area radiation monitor could detect an increase in a dose rate due to a lowering of water level in some portion of the REFUELING PATHWAY, the reading may not be a reliable indication of whether or not the fuel is actually uncovered. To the degree possible, readings should be considered in combination with other available indications of inventory loss.

A drop in water level above irradiated fuel within the reactor vessel may be classified in accordance Recognition Category C during the Cold Shutdown and Refueling modes.

Escalation of the emergency classification level would be via IC RS1.

Basis Reference(s):

1. Technical Specifications 3.7.7 Spent Fuel Storage Pool Water Level
2. PLA-6980 Enclosure 1 Susquehanna Units 1 & 2 Overall Integrated Plan with Regard to Reliable Spent Fuel Pool Instrumentation
3. ON-FPC-101(201) Loss of Fuel Pool Cooling
4. AOP-081-001 Fuel Handling Abnormal Operating Procedure
5. NEI 99-01 AA2

Category: R – Abnormal Rad Levels / Rad Effluent

Subcategory: 2 – Irradiated Fuel Event

Initiating Condition: Significant lowering of water level above, or damage to, irradiated fuel

EAL:

RA2.2 Alert

Damage to irradiated fuel resulting in a release of radioactivity

AND

Any of the following radiation monitor indications:

- Refuel Floor High Exhaust (> 18 mR/hr)
- Refuel Floor Wall Exhaust (> 21 mR/hr)
- Channel 14 Spent Fuel Pool Area Criticality Monitor (> 100 mR/hr)
- Channel 15 Refueling Floor Area (> 80 mR/hr)
- Channel 42 Refueling Floor Area (> 80 mR/hr)
- Channel 47 (U1) / 44 (U2) Spent Fuel Pool Area Criticality Monitor (> 100 mR/hr)
- Channel 49 Refueling Floor High Range Monitor (on scale)

Mode Applicability:

All

Definition(s):

None

Basis:

The Reactor Building ventilation process monitoring system isolates Zone 3 HVAC on high exhaust radiation. Zone 3 exhaust can be monitored at 1C600 (2C600) (ref. 4):

- RR D12 1R605 (2R605), Refuel Floor Wall Exhaust Radiation Monitor
- RR D12 1R607 (2R607), Refuel Floor High Exhaust Radiation Monitor

The listed radiation monitors and specified alarm setpoints/ indications are those associated with a fuel handling accident or damaged spent fuel (ref. 1, 3, 5).

This IC addresses events that have caused imminent or actual damage to an irradiated fuel assembly, or a significant lowering of water level within the spent fuel pool. These events present radiological safety challenges to plant personnel and are precursors to a release of radioactivity to the environment. As such, they represent an actual or potential substantial degradation of the level of safety of the plant.

Escalation of the emergency would be based on either Recognition Category R or C ICs.

This EAL addresses a release of radioactive material caused by mechanical damage to

irradiated fuel. Damaging events may include the dropping, bumping or binding of an assembly, or dropping a heavy load onto an assembly. A rise in readings on radiation monitors should be considered in conjunction with in-plant reports or observations of a potential fuel damaging event (e.g., a fuel handling accident).

Escalation of the emergency classification level would be via IC RS1.

Basis Reference(s):

1. OP-179(279)-001 Area Radiation Monitoring System
2. PLA-6980 Enclosure 1 Susquehanna Units 1 & 2 Overall Integrated Plan with Regard to Reliable Spent Fuel Pool Instrumentation
3. AOP-081-001 Fuel Handling Abnormal Operating Procedure
4. EO-000-104 Secondary Containment Control
5. AR-101(201)-001
6. NEI 99-01 AA2

Category: R – Abnormal Rad Levels / Rad Effluent

Subcategory: 2 – Irradiated Fuel Event

Initiating Condition: Significant lowering of water level above, or damage to, irradiated fuel

EAL:

RA2.3 Alert

Lowering of spent fuel pool level to ≤ 10 ft. above the top of the spent fuel racks

Mode Applicability:

All

Definition(s):

None

Basis:

Each fuel storage pool is designed to maintain the water level in the pool above the top of active fuel providing cooling for the fuel rods. Technical Specifications require greater than or equal to 22 ft. of water be maintained over the top of irradiated fuel assemblies seated in the spent fuel storage racks at all times (ref. 1). In the event of loss of fuel pool inventory, Operations will assess multiple indications in accordance with ON-FPC-101(201) and AOP-081-001 (ref. 3, 4).

Post-Fukushima order EA-12-051 required the installation of reliable SFP level indication capable of identifying normal SPF level 22.75 feet above the top of the fuel racks (Level 1 or el. 817'-1"), SFP level 10 ft. above the top of the fuel racks (Level 2 or el. 804'-4") and SFP level at the top of the fuel racks (Level 3 or el. 794'-10" which for SSES is 0.5 feet on instrument above the top of the fuel racks). Each spent fuel pool is equipped with primary and backup guided wave radar probes to measure pool level. The range is continuous from the high pool level elevation (23.25 feet on instrument or el. 817'-7") to the top of the spent fuel racks (0.0 feet on instrument or el. 794'-4") (ref. 2).

Each new SFP LI system provides two alarms to the associated Unit's Control Room Benchboard. The first alarm identifies a low water level condition at 20 ft. (instrument) above the spent fuel rack (elevation 814'-4"). The second alarm identifies a low low water level condition at 10 ft. (instrument) above the spent fuel rack (Level 2 or elevation 804'-4"). These alarms are intended to alert the control room operators of the loss of SFP inventory so actions are taken to provide make-up as soon as possible (ref. 2).

This IC addresses events that have caused imminent or actual damage to an irradiated fuel assembly, or a significant lowering of water level within the spent fuel pool. These events present radiological safety challenges to plant personnel and are precursors to a release of radioactivity to the environment. As such, they represent an actual or potential substantial degradation of the level of safety of the plant.

A drop in water level above irradiated fuel within the reactor vessel may be classified in accordance Recognition Category C during the Cold Shutdown and Refueling modes.

Spent fuel pool water level at this value is within the lower end of the level range necessary to prevent significant dose consequences from direct gamma radiation to personnel performing

operations in the vicinity of the spent fuel pool. This condition reflects a significant loss of spent fuel pool water inventory and thus it is also a precursor to a loss of the ability to adequately cool the irradiated fuel assembles stored in the pool.

Escalation of the emergency classification level would be via IC RS1.

Basis Reference(s):

1. Technical Specifications 3.7.7 Spent Fuel Storage Pool Water Level
2. PLA-6980 Enclosure 1 Susquehanna Units 1 & 2 Overall Integrated Plan with Regard to Reliable Spent Fuel Pool Instrumentation
3. ON-FPC-101(201) Loss of Fuel Pool Cooling
4. AOP-081-001 Fuel Handling Abnormal Operating Procedure
5. NEI 99-01 AA2

Category: R – Abnormal Rad Levels / Rad Effluent

Subcategory: 2 – Irradiated Fuel Event

Initiating Condition: Unplanned loss of water level above irradiated fuel

EAL:

RU2.1 Unusual Event

UNPLANNED water level drop in the REFUELING PATHWAY as indicated by **any** of the following on **EITHER** unit:

- Fuel Pool Water Low Level alarm
- Skimmer Surge Tank Low Level alarm
- Visual observation of a water level drop below a fuel pool skimmer surge tank inlet
- Observation of water draining down the outside wall of primary containment

AND

UNPLANNED rise in area radiation levels as indicated by **any** of the following radiation monitors:

- Channel 14 Spent Fuel Pool Area Criticality Monitor
- Channel 15 Refueling Floor Area
- Channel 42 Refueling Floor Area

Mode Applicability:

All

Definition(s):

UNPLANNED- A parameter change or an event that is not 1) the result of an intended evolution or 2) an expected plant response to a transient. The cause of the parameter change or event may be known or unknown.

REFUELING PATHWAY-. The reactor refueling cavity, spent fuel pool and fuel transfer canal comprise the refueling pathway.

Basis:

Each fuel storage pool is designed to maintain the water level in the pool above the top of active fuel providing cooling for the fuel rods. Technical Specifications require greater than or equal to 22 feet of water be maintained over the top of irradiated fuel assemblies seated in the spent fuel storage racks at all times (ref. 1). In the event of loss of fuel pool inventory, Operations will assess multiple indications in accordance with ON-FPC-101(201) and AOP-081-001 (ref. 4, 6).

When the spent fuel pool and reactor cavity are connected, there could exist the possibility of uncovering irradiated fuel. Therefore, this EAL is applicable for conditions in which irradiated fuel is being transferred to and from the RPV and spent fuel pool.

Control room alarms associated with elevated refuel floor area radiation levels include (ref. 4, 5):

- REFUELING FLOOR AREA HI RADIATION (AR-101-D05)
- SPENT FUEL POOL AREA HI RADIATION (AR-101-E05)

The listed ARMs are the normal range monitors that detect increasing area radiation due to a lack of shielding in the REFUELING PATHWAY (ref. 6).

This IC addresses a decrease in water level above irradiated fuel sufficient to cause elevated radiation levels. This condition could be a precursor to a more serious event and is also indicative of a minor loss in the ability to control radiation levels within the plant. It is therefore a potential degradation in the level of safety of the plant.

A water level decrease will be primarily determined by indications from available level instrumentation. Other sources of level indications may include reports from plant personnel (e.g., from a refueling crew) or video camera observations (if available). A significant drop in the water level may also cause an increase in the radiation levels of adjacent areas that can be detected by monitors in those locations.

The effects of planned evolutions should be considered. For example, a refueling bridge area radiation monitor reading may increase due to planned evolutions such as lifting of the reactor vessel head or movement of a fuel assembly. Note that this EAL is applicable only in cases where the elevated reading is due to an unplanned loss of water level.

A drop in water level above irradiated fuel within the reactor vessel may be classified in accordance Recognition Category C during the Cold Shutdown and Refueling modes.

Escalation of the emergency classification level would be via IC RA2.

Basis Reference(s):

1. Technical Specifications 3.7.7 Spent Fuel Storage Pool Water Level
2. OP-179(279)-001 Area Radiation Monitoring System
3. AOP-081-001 Fuel Handling Abnormal Operating Procedure
4. EO-000-104 Secondary Containment Control
5. SSES-FSAR Table 12.3-7 Area Radiation Monitoring System
6. ON-FPC-101(201) Loss of Fuel Pool Cooling
7. NEI 99-01 AU2

Category: R – Abnormal Rad Levels / Rad Effluent

Subcategory: 3 – Area Radiation Levels

Initiating Condition: Radiation levels that IMPEDE access to equipment necessary for normal plant operations, cooldown or shutdown

EAL:

RA3.1 Alert

Dose rates > 15 mR/hr in **any** of the following areas:

- Main Control Room
- Radwaste Control Room
- Both the Central Alarm Station (CAS) and Secondary Alarm Station (SAS)

Mode Applicability:

All

Definition(s):

None

Basis:

Central Alarm Station (CAS) and Secondary Alarm Station (SAS) are included in this EAL because of their importance in permitting access to areas required to assure safe plant operations (ref. 1). Both are included in this EAL because either security station can effectively permit access to areas required to assure safe plant operations. It is not the intent of this EAL that there be continuous radiation monitoring in the CAS or SAS. However, if a radiological release is in progress and there are indications that the release may affect the CAS and SAS and dose rates in both areas are determined by manual radiological survey to be greater than 15 mR/hr, an Alert shall be declared.

This IC addresses elevated radiation levels in certain plant rooms/areas sufficient to preclude or impede personnel from performing actions necessary to maintain normal plant operation, or to perform a normal plant cooldown and shutdown. As such, it represents an actual or potential substantial degradation of the level of safety of the plant. The Emergency Director/Recovery Manager should consider the cause of the increased radiation levels and determine if another IC may be applicable.

Escalation of the emergency classification level would be via Recognition Category R, C or F ICs.

Basis Reference(s):

1. AR-1650683
2. NEI 99-01 AA3

Category: R – Abnormal Rad Levels / Rad Effluent

Subcategory: 3 – Area Radiation Levels

Initiating Condition: Radiation levels that IMPEDE access to equipment necessary for normal plant operations, cooldown or shutdown

EAL:

RA3.2 Alert

An UNPLANNED event results in radiation levels that prohibit or IMPEDE access to **any** Table R-2 rooms or areas (Note 5)

Note 5: If the equipment in the listed room or area was already inoperable or out-of-service before the event occurred, then no emergency classification is warranted.

Table R-2 Safe Operation & Shutdown Areas

Elevation	Unit 1 Area(s) **	Unit 2 Area(s) **	Mode(s)
670'	RB 27	RB 32	3,4,5
683'	RB 27, 28, 29	RB 32, 33, 34	3,4,5
703'	RB 28, 29	RB 33, 34	3,4,5
719'	RB 25, 29	RB 30, 34	3,4,5
749'	RB 25, 29	RB 32, 33	3,4,5

**** See Chart 1 for location of plant areas**

Chart 1- Plant Area Key Plan

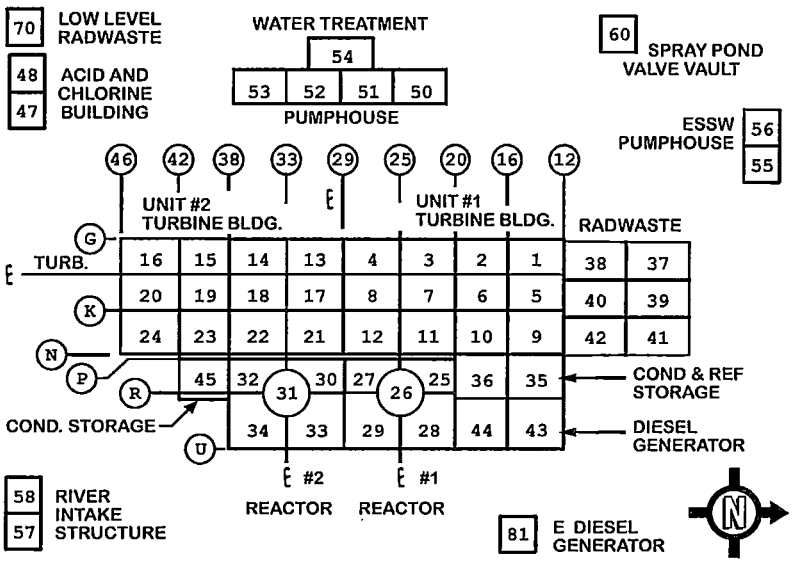

Mode Applicability:

3 - Hot Shutdown

Definition(s):

IMPEDE(D) - Personnel access to a room or area is hindered to an extent that extraordinary measures are necessary to facilitate entry of personnel into the affected room/area (e.g., requiring use of protective measures such as temporary shielding, SCBAs or beyond Emergency Plan RWP dose extensions that are not routinely employed to access the room/area).

UNPLANNED-. A parameter change or an event that is not 1) the result of an intended evolution or 2) an expected plant response to a transient. The cause of the parameter change or event may be known or unknown.

Basis:

If the equipment in the listed room or area was already inoperable, or out-of-service, before the event occurred, then no emergency should be declared since the event will have no adverse impact beyond that already allowed by Technical Specifications at the time of the event.

The list of plant areas in Table R-2 specify those areas that contain equipment which require a manual/local action as specified in operating procedures used for normal plant operation, cooldown and shutdown. Areas in which actions of a contingent or emergency nature would be performed (e.g., an action to address an off-normal or emergency condition such as emergency repairs, corrective measures or emergency operations) are not included. In addition, the list specifies the plant mode(s) during which entry would be required for each room or area. See Chart 1 for the specific locations of areas listed in Table R-2. See Attachment 3 for more details of how the Table R-2 was developed (ref. 1).

This IC addresses elevated radiation levels in certain plant rooms/areas sufficient to preclude or impede personnel from performing actions necessary to maintain normal plant operation, or to perform a normal plant cooldown and shutdown. As such, it represents an actual or potential substantial degradation of the level of safety of the plant. The Emergency Director/Recovery Manager should consider the cause of the increased radiation levels and determine if another IC may be applicable.

For RA3.2, an Alert declaration is warranted if entry into the affected room/area is, or may be, procedurally required during the plant operating mode in effect at the time of the elevated radiation levels. The emergency classification is not contingent upon whether entry is actually necessary at the time of the increased radiation levels. Access should be considered as impeded if extraordinary measures are necessary to facilitate entry of personnel into the affected room/area (e.g., installing temporary shielding, requiring use of non-routine protective equipment, requesting an extension in dose limits beyond normal administrative limits).

An emergency declaration is not warranted if any of the following conditions apply:

- The plant is in an operating mode different than the mode specified for the affected room/area (i.e., entry is not required during the operating mode in effect at the time of the elevated radiation levels). For example, the plant is in Mode 1 when the radiation

increase occurs, and the procedures used for normal operation, cooldown and shutdown do not require entry into the affected room until Mode 4.

- The increased radiation levels are a result of a planned activity that includes compensatory measures which address the temporary inaccessibility of a room or area (e.g., radiography, spent filter or resin transfer, etc.).
- The action for which room/area entry is required is of an administrative or record keeping nature (e.g., normal rounds or routine inspections).
- The access control measures are of a conservative or precautionary nature, and would not actually prevent or impede a required action.
- If the equipment in the listed room or area was already inoperable, or out-of-service, before the event occurred, then no emergency should be declared since the event will have no adverse impact beyond that already allowed by Technical Specifications at the time of the event.

Escalation of the emergency classification level would be via Recognition Category R, C or F ICs.

Basis Reference(s):

1. Attachment 3 Safe Operation & Shutdown Areas Tables R-2 & H-2 Bases
2. NEI 99-01 AA3

Category C – Cold Shutdown / Refueling System Malfunction

EAL Group: Cold Conditions (RCS temperature ≤200°F); EALs in this category are applicable only in one or more cold operating modes.

Category C EALs are directly associated with cold shutdown or refueling system safety functions. Given the variability of plant configurations (e.g., systems out-of-service for maintenance, containment open, reduced AC power redundancy, time since shutdown) during these periods, the consequences of any given initiating event can vary greatly. For example, a loss of decay heat removal capability that occurs at the end of an extended outage has less significance than a similar loss occurring during the first week after shutdown. Compounding these events is the likelihood that instrumentation necessary for assessment may also be inoperable. The cold shutdown and refueling system malfunction EALs are based on performance capability to the extent possible with consideration given to RCS integrity, CONTAINMENT CLOSURE, and fuel clad integrity for the applicable operating modes (4 - Cold Shutdown, 5 - Refueling, D – Defueled).

The events of this category pertain to the following subcategories:

1. RPV Level

Reactor Pressure Vessel water level is directly related to the status of adequate core cooling and, therefore, fuel clad integrity.

2. Loss of Essential AC Power

Loss of essential plant electrical power can compromise plant safety system operability including decay heat removal and emergency core cooling systems which may be necessary to ensure fission product barrier integrity. This category includes loss of onsite and offsite power sources for 4.16 kV ESS buses.

3. Loss of Vital DC Power

Loss of emergency plant electrical power can compromise plant safety system operability including decay heat removal and emergency core cooling systems which may be necessary to ensure fission product barrier integrity. This category includes loss of power to or degraded voltage on the 125 VDC vital buses.

4. RCS Temperature

Uncontrolled or inadvertent temperature or pressure increases are indicative of a potential loss of safety functions.

5. Loss of Communications

Certain events that degrade plant operator ability to effectively communicate with essential personnel within or external to the plant warrant emergency classification.

6. Hazardous Event Affecting Safety Systems

Certain hazardous natural and technological events may result in visible damage to or degraded performance of safety systems warranting classification.

Category: C – Cold Shutdown / Refueling System Malfunction

Subcategory: 1 – RPV Level

Initiating Condition: Loss of RPV inventory affecting fuel clad integrity with Containment challenged

EAL:

CG1.1 General Emergency

RPV level < -161 in. (TAF) for ≥30 min. (Note 1)

AND

Any Containment Challenge indication, Table C-2

Note 1: The ED/RM should declare the event promptly upon determining that time limit has been exceeded, or will likely be exceeded.

Note 6: If CONTAINMENT CLOSURE is re-established prior to exceeding the 30-minute time limit, declaration of a General Emergency is **not** required.

Table C-2 Containment Challenge Indications
• CONTAINMENT CLOSURE **not** established (Note 6) • PC hydrogen concentration > 6% • UNPLANNED rise in PC pressure • Exceeding one or more Secondary Containment Control Max Safe Radiation Levels (EO-000-104 Table 9) that can be read in the Control Room (Table C-6)

Table C-6

Max Safe Reactor Building Radiation Limits

RB Area Elevation (ft)	ARM Number	ARM Channel Description	Max Safe Rad Limit (R/HR)
818	49	Refuel Floor Area	10
749	52 54	RWCU Recirc PP Access Fuel Pool PP Area	10
719	50 51	CRD North CRD South	10
670	53	Remote Shutdown Room	10
645	48 57 55 56	HPCI PP & Turbine Room RCIC PP & Turbine Room RHR A C PP Room RHR B D PP Room	10

Mode Applicability:

4 - Cold Shutdown, 5 – Refueling

Definition(s):

CONTAINMENT CLOSURE - The procedurally defined conditions or actions taken to secure Primary or Secondary Containment and its associated structures, systems, and components as a functional barrier to fission product release under shutdown conditions.

As applied to Susquehanna, CONTAINMENT CLOSURE is established per NDAP-QA-0309 (ref. 4) for Primary Containment OR is established per NDAP-QA-0321 (ref. 5) for Secondary Containment.

UNPLANNED-. A parameter change or an event that is not 1) the result of an intended evolution or 2) an expected plant response to a transient. The cause of the parameter change or event may be known or unknown.

Basis:

When RPV level drops below -161 in., core uncovery starts to occur (ref. 1).

Four conditions are associated with a challenge to Primary Containment (PC) integrity:

- CONTAINMENT CLOSURE is not established.

- In the early stages of a core uncovery event, it is unlikely that hydrogen buildup due to a core uncovery could result in an explosive mixture of dissolved gases in the Primary Containment. However, Primary Containment monitoring and/or sampling should be performed to verify this assumption and a General Emergency declared if it is determined that an explosive mixture exists. An explosive mixture can be formed when hydrogen gas concentration in the Primary Containment atmosphere is greater than 6% by volume in the presence of oxygen (>5%) (ref. 2). In Cold Shutdown and Refueling modes it is assumed that the Primary Containment is de-inerted.
- Any unplanned increase in PC pressure in the Cold Shutdown or Refueling mode indicates a potential loss of CONTAINMENT CLOSURE capability. Unplanned Primary Containment pressure increases indicates CONTAINMENT CLOSURE cannot be assured and the Primary Containment cannot be relied upon as a barrier to fission product release.
- Secondary Containment radiation monitors that can be read in the Control Room should provide indication of increased release that may be indicative of a challenge to CONTAINMENT CLOSURE. The Max Safe radiation levels are indicative of problems in the secondary containment that are spreading. The locations into which the primary system discharge is of concern correspond to the areas addressed in EO-000-104, Secondary Containment Control, (ref. 3).

This IC addresses the inability to restore and maintain reactor vessel level above the top of active fuel with containment challenged. This condition represents actual or IMMINENT substantial core degradation or melting with potential for loss of containment integrity. Releases can be reasonably expected to exceed EPA PAG exposure levels offsite for more than the immediate site area.

Following an extended loss of core decay heat removal and inventory makeup, decay heat will cause reactor coolant boiling and a further reduction in reactor vessel level. If RPV level cannot be restored, fuel damage is probable.

With CONTAINMENT CLOSURE not established, there is a high potential for a direct and unmonitored release of radioactivity to the environment. If CONTAINMENT CLOSURE is re-established prior to exceeding the 30-minute time limit, then declaration of a General Emergency is not required.

The existence of an explosive mixture means, at a minimum, that the containment atmospheric hydrogen concentration is sufficient to support a hydrogen burn (i.e., at the lower deflagration limit). A hydrogen burn will raise containment pressure and could result in collateral equipment damage leading to a loss of containment integrity. It therefore represents a challenge to containment integrity.

In the early stages of a core uncovery event, it is unlikely that hydrogen buildup due to a core uncovery could result in an explosive gas mixture in containment. If all installed hydrogen gas monitors are out-of-service during an event leading to fuel cladding damage, it may not be possible to obtain a containment hydrogen gas concentration reading as ambient conditions within the containment will preclude personnel access. During periods when installed containment hydrogen gas monitors are out-of-service, operators may use the other listed indications to assess whether or not containment is challenged.

The 30-minute criterion is tied to a readily recognizable event start time (i.e., the total loss of ability to monitor level), and allows sufficient time to monitor, assess and correlate reactor and plant conditions to determine if core uncovery has actually occurred (i.e., to account for various accident progression and instrumentation uncertainties). It also allows sufficient time for performance of actions to terminate leakage, recover inventory control/makeup equipment and/or restore level monitoring.

This EAL addresses concerns raised by Generic Letter 88-17, *Loss of Decay Heat Removal*; SECY 91-283, *Evaluation of Shutdown and Low Power Risk Issues*; NUREG-1449, *Shutdown and Low-Power Operation at Commercial Nuclear Power Plants in the United States*; and NUMARC 91-06, *Guidelines for Industry Actions to Assess Shutdown Management*.

Basis Reference(s):

1. EO-000-101 RPV Control
2. EP-DS-001 Containment Combustible Gas Control
3. EO-000-104 Secondary Containment Control
4. NDAP-QA-0309 Primary Containment Access and Control
5. NDAP-QA-0321 Secondary Containment Integrity Control
6. NEI 99-01 CG1

Category: C – Cold Shutdown / Refueling System Malfunction

Subcategory: 1 – RPV Level

Initiating Condition: Loss of RPV inventory affecting fuel clad integrity with Containment challenged

EAL:

CG1.2 General Emergency

RPV level **cannot** be monitored for ≥30 min. (Note 1)

AND

UNPLANNED increase in **any** Table C-1 sump or tank level due to a loss of RPV inventory of sufficient magnitude to indicate core uncovery

AND

Any Containment Challenge indication, Table C-2

Note 1: The ED/RM should declare the event promptly upon determining that time limit has been exceeded, or will likely be exceeded.

Note 6: If CONTAINMENT CLOSURE is re-established prior to exceeding the 30-minute time limit, declaration of a General Emergency is **not** required.

Table C-1 Sumps & Tanks
• Drywell equipment drain tank • Drywell sumps • Reactor Building sump • LRW collection tanks • Main condenser hotwell • Suppression pool • Visual observation

Table C-2 Containment Challenge Indications
• CONTAINMENT CLOSURE **not** established (Note 6) • PC hydrogen concentration > 6% • UNPLANNED rise in PC pressure • Exceeding one or more Secondary Containment Control Max Safe Radiation Levels (EO-000-104 Table 9) that can be read in the Control Room (Table C-6)

Table C-6

Max Safe Reactor Building Radiation Limits

RB Area Elevation (ft)	ARM Number	ARM Channel Description	Max Safe Rad Limit (R/HR)
818	49	Refuel Floor Area	10
749	52 54	RWCU Recirc PP Access Fuel Pool PP Area	10
719	50 51	CRD North CRD South	10
670	53	Remote Shutdown Room	10
645	48 57 55 56	HPCI PP & Turbine Room RCIC PP & Turbine Room RHR A C PP Room RHR B D PP Room	10

Mode Applicability:

4 - Cold Shutdown, 5 – Refueling

Definition(s):

UNPLANNED-. A parameter change or an event that is not 1) the result of an intended evolution or 2) an expected plant response to a transient. The cause of the parameter change or event may be known or unknown.

CONTAINMENT CLOSURE - The procedurally defined conditions or actions taken to secure Primary or Secondary Containment and its associated structures, systems, and components as a functional barrier to fission product release under shutdown conditions.

As applied to Susquehanna, CONTAINMENT CLOSURE is established per NDAP-QA-0309 (ref. 7) for Primary Containment OR is established per NDAP-QA-0321 (ref. 8) for Secondary Containment.

Basis:

In Cold Shutdown mode, the RCS will normally be intact and standard RPV level monitoring means are available. RPV level in the Refueling mode is normally monitored using the Shutdown Range or temporary RPV shutdown level transmitter (ref. 1).

If RPV level monitoring capability is unavailable, the RPV inventory loss must be detected by the leakage indications listed in Table C-1. Level increases must be evaluated against other

potential sources of leakage such as cooling water sources inside the drywell to ensure they are indicative of RPV leakage. Rise in drywell equipment drain tank level and drywell floor sump level is the normal method of monitoring and calculating leakage from the RPV (ref. 2). A Reactor Building sump level rise may also be indicative of RCS inventory losses external to the Primary Containment from systems connected to the RPV. With RHR System operating in the Shutdown Cooling mode, an unexplained rise in suppression pool water level could be indicative of RHR valve misalignment or leakage (ref. 3, 4). If the make-up rate to the RPV unexplainably rises above the pre-established rate, a loss of RPV inventory may be occurring even if the source of the leakage cannot be immediately identified. Visual observation of leakage from systems connected to the RCS that cannot be isolated could be indicative of a loss of RPV inventory.

Four conditions are associated with a challenge to Primary Containment (PC) integrity:

- CONTAINMENT CLOSURE is not established.
- In the early stages of a core uncovery event, it is unlikely that hydrogen buildup due to a core uncovery could result in an explosive mixture of dissolved gases in the Primary Containment. However, Primary Containment monitoring and/or sampling should be performed to verify this assumption and a General Emergency declared if it is determined that an explosive mixture exists. An explosive mixture can be formed when hydrogen gas concentration in the Primary Containment atmosphere is greater than 6% by volume in the presence of oxygen (>5%) (ref. 5). In Cold Shutdown and Refueling modes it is assumed that the Primary Containment is de-inerted.
- Any unplanned increase in PC pressure in the Cold Shutdown or Refueling mode indicates a potential loss of CONTAINMENT CLOSURE capability. Unplanned Primary Containment pressure increases indicates CONTAINMENT CLOSURE cannot be assured and the Primary Containment cannot be relied upon as a barrier to fission product release.
- Secondary Containment radiation monitors should provide indication of increased release that may be indicative of a challenge to CONTAINMENT CLOSURE. The Max Safe radiation levels are indicative of problems in the secondary containment that are spreading. The locations into which the primary system discharge is of concern correspond to the areas addressed in EO-000-104, Secondary Containment Control, (ref. 6).

This IC addresses the inability to restore and maintain reactor vessel level above the top of active fuel with containment challenged. This condition represents actual or IMMINENT substantial core degradation or melting with potential for loss of containment integrity. Releases can be reasonably expected to exceed EPA PAG exposure levels offsite for more than the immediate site area.

Following an extended loss of core decay heat removal and inventory makeup, decay heat will cause reactor coolant boiling and a further reduction in reactor vessel level. If RPV level cannot be restored, fuel damage is probable.

With CONTAINMENT CLOSURE not established, there is a high potential for a direct and unmonitored release of radioactivity to the environment. If CONTAINMENT CLOSURE is re-established prior to exceeding the 30-minute time limit, then declaration of a General

Emergency is not required.

The existence of an explosive mixture means, at a minimum, that the containment atmospheric hydrogen concentration is sufficient to support a hydrogen burn (i.e., at the lower deflagration limit). A hydrogen burn will raise containment pressure and could result in collateral equipment damage leading to a loss of containment integrity. It therefore represents a challenge to containment integrity.

In the early stages of a core uncovery event, it is unlikely that hydrogen buildup due to a core uncovery could result in an explosive gas mixture in containment. If all installed hydrogen gas monitors are out-of-service during an event leading to fuel cladding damage, it may not be possible to obtain a containment hydrogen gas concentration reading as ambient conditions within the containment will preclude personnel access. During periods when installed containment hydrogen gas monitors are out-of-service, operators may use the other listed indications to assess whether or not containment is challenged.

The 30-minute criterion is tied to a readily recognizable event start time (i.e., the total loss of ability to monitor level), and allows sufficient time to monitor, assess and correlate reactor and plant conditions to determine if core uncovery has actually occurred (i.e., to account for various accident progression and instrumentation uncertainties). It also allows sufficient time for performance of actions to terminate leakage, recover inventory control/makeup equipment and/or restore level monitoring.

The inability to monitor RPV level may be caused by instrumentation and/or power failures, or water level dropping below the range of available instrumentation. If water level cannot be monitored, operators may determine that an inventory loss is occurring by observing changes in sump and/or tank levels. Sump and/or tank level changes must be evaluated against other potential sources of water flow to ensure they are indicative of leakage from the RCS.

This EAL addresses concerns raised by Generic Letter 88-17, *Loss of Decay Heat Removal*; SECY 91-283, *Evaluation of Shutdown and Low Power Risk Issues*; NUREG-1449, *Shutdown and Low-Power Operation at Commercial Nuclear Power Plants in the United States*; and NUMARC 91-06, *Guidelines for Industry Actions to Assess Shutdown Management*.

Basis Reference(s):

1. IC 180 005 Installation and Removal of Temporary Unit 1 RPV Shutdown Level Transmitter
2. ON-100(200)-005 Excess Drywell Leakage Identification
3. OP-149(249)-002 RHR Operation in Shutdown Cooling Mode
4. ON-149(249)-001 Loss of RHR Shutdown Cooling Mode
5. EP-DS-001 Containment Combustible Gas Control
6. EO-000-104 Secondary Containment Control
7. NDAP-QA-0309 Primary Containment Access and Control
8. NDAP-QA-0321 Secondary Containment Integrity Control
9. NEI 99-01 CG1

Category: C – Cold Shutdown / Refueling System Malfunction

Subcategory: 1 – RPV Level

Initiating Condition: Loss of RPV inventory affecting core decay heat removal capability

EAL:

CS1.1 Site Area Emergency

CONTAINMENT CLOSURE **not** established

AND

RPV level < -129 in. (Level 1)

Mode Applicability:

4 - Cold Shutdown, 5 - Refueling

Definition(s):

CONTAINMENT CLOSURE - The procedurally defined conditions or actions taken to secure Primary or Secondary Containment and its associated structures, systems, and components as a functional barrier to fission product release under shutdown conditions.

As applied to Susquehanna, CONTAINMENT CLOSURE is established per NDAP-QA-0309 (ref. 3) for Primary Containment OR is established per NDAP-QA-0321 (ref. 4) for Secondary Containment.

Basis:

RPV level is normally monitored using the instruments in Figure C-1 (ref. 1, 2).

When RPV level decreases to -129 in., RPV water level is below the low-low-low ECCS actuation setpoint (Level 1) (ref. 1).

The magnitude of this loss of water indicates that makeup systems have not been effective and may not be capable of preventing further RPV water level decrease and potential core uncovery. The inability to restore and maintain level after reaching this setpoint infers a failure of the RCS barrier and Potential Loss of the Fuel Clad barrier.

This IC addresses a significant and prolonged loss of RCS level control and makeup capability leading to IMMINENT fuel damage. The lost inventory may be due to a RCS component failure, a loss of configuration control or prolonged boiling of reactor coolant. These conditions entail major failures of plant functions needed for protection of the public and thus warrant a Site Area Emergency declaration.

Following an extended loss of core decay heat removal and inventory makeup, decay heat will cause reactor coolant boiling and a further reduction in reactor vessel level. If RPV level cannot be restored, fuel damage is probable.

Outage/shutdown contingency plans typically provide for re-establishing or verifying CONTAINMENT CLOSURE following a loss of heat removal or RCS inventory control functions.

The difference in the specified RPV levels of CS1.1 and CS1.2 reflect the fact that with CONTAINMENT CLOSURE established, there is a lower probability of a fission product release to the environment.

This EAL addresses concerns raised by Generic Letter 88-17, Loss of Decay Heat Removal; SECY 91-283, Evaluation of Shutdown and Low Power Risk Issues; NUREG-1449, Shutdown and Low-Power Operation at Commercial Nuclear Power Plants in the United States; and NUMARC 91-06, Guidelines for Industry Actions to Assess Shutdown Management.

Escalation of the emergency classification level would be via IC CG1 or RG1.

Basis Reference(s):

1. M-142 P&ID Nuclear Boiler Vessel Instrumentation, Sheets 1, 2
2. ON-145(245)-004 RPV Water Level Anomaly
3. NDAP-QA-0309 Primary Containment Access and Control
4. NDAP-QA-0321 Secondary Containment Integrity Control
5. NEI 99-01 CS1

Figure C-1 RPV Levels (ref. 1, 2)

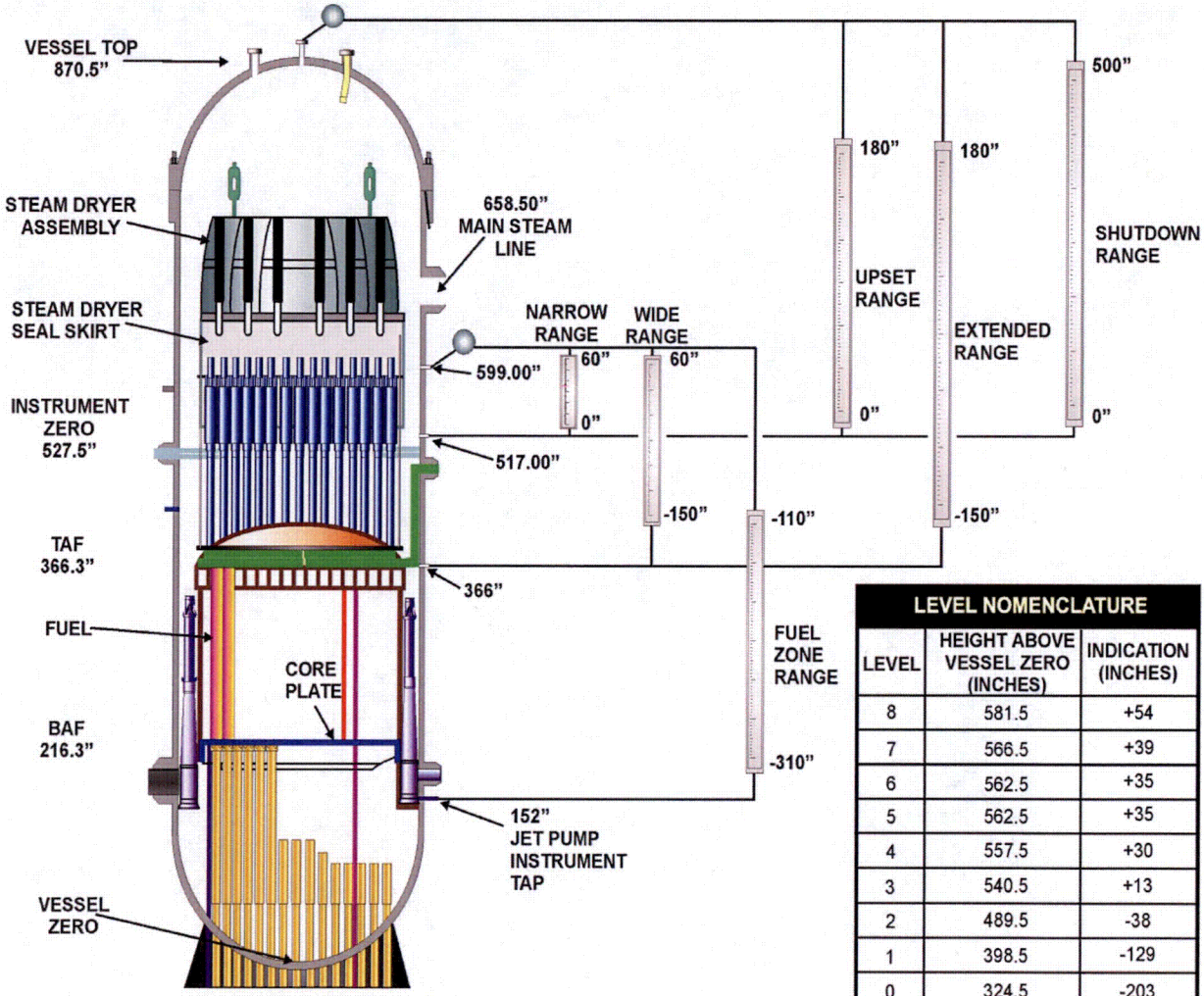

LEVEL NOMENCLATURE		
LEVEL	HEIGHT ABOVE VESSEL ZERO (INCHES)	INDICATION (INCHES)
8	581.5	+54
7	566.5	+39
6	562.5	+35
5	562.5	+35
4	557.5	+30
3	540.5	+13
2	489.5	-38
1	398.5	-129
0	324.5	-203

Category: C – Cold Shutdown / Refueling System Malfunction

Subcategory: 1 – RPV Level

Initiating Condition: Loss of RPV inventory affecting core decay heat removal capability

EAL:

CS1.2	**Site Area Emergency**
CONTAINMENT CLOSURE established **AND** RPV level < -161 in. (TAF)	

Mode Applicability:

4 - Cold Shutdown, 5 - Refueling

Definition(s):

CONTAINMENT CLOSURE - The procedurally defined conditions or actions taken to secure Primary or Secondary Containment and its associated structures, systems, and components as a functional barrier to fission product release under shutdown conditions.

As applied to Susquehanna, CONTAINMENT CLOSURE is established per NDAP-QA-0309 (ref. 2) for Primary Containment OR is established per NDAP-QA-0321 (ref. 3) for Secondary Containment.

Basis:

When RPV level drops to the top of active fuel (TAF) (an indicated RPV level of -161 in.), core uncovery starts to occur (ref. 1).

This IC addresses a significant and prolonged loss of RPV level control and makeup capability leading to IMMINENT fuel damage. The lost inventory may be due to a RCS component failure, a loss of configuration control or prolonged boiling of reactor coolant. These conditions entail major failures of plant functions needed for protection of the public and thus warrant a Site Area Emergency declaration.

Following an extended loss of core decay heat removal and inventory makeup, decay heat will cause reactor coolant boiling and a further reduction in reactor vessel level. If RPV level cannot be restored, fuel damage is probable.

Outage/shutdown contingency plans typically provide for re-establishing or verifying CONTAINMENT CLOSURE following a loss of heat removal or RCS inventory control functions. The difference in the specified RCS/reactor vessel levels of CS1.1 and CS1.2 reflect the fact that with CONTAINMENT CLOSURE established, there is a lower probability of a fission product release to the environment.

This EAL addresses concerns raised by Generic Letter 88-17, Loss of Decay Heat Removal; SECY 91-283, Evaluation of Shutdown and Low Power Risk Issues; NUREG-1449, Shutdown and Low-Power Operation at Commercial Nuclear Power Plants in the United States; and NUMARC 91-06, Guidelines for Industry Actions to Assess Shutdown Management.

Escalation of the emergency classification level would be via IC CG1 or RG1.

Basis Reference(s):

1. EO-000-102 RPV Control
2. NDAP-QA-0309 Primary Containment Access and Control
3. NDAP-QA-0321 Secondary Containment Integrity Control
4. NEI 99-01 CS1

Category: C – Cold Shutdown / Refueling System Malfunction

Subcategory: 1 – RPV Level

Initiating Condition: Loss of RPV inventory affecting core decay heat removal capability

EAL:

CS1.3 Site Area Emergency

RPV level cannot be monitored for ≥30 min. (Note 1)

AND

UNPLANNED increase in **any** Table C-1 sump or tank level due to a loss of RPV inventory of sufficient magnitude to indicate core uncovery

Note 1: The ED/RM should declare the event promptly upon determining that time limit has been exceeded, or will likely be exceeded.

Table C-1 Sumps & Tanks
• Drywell equipment drain tank • Drywell sumps • Reactor Building sump • LRW collection tanks • Main condenser hotwell • Suppression pool • Visual observation

Mode Applicability:

4 – Cold Shutdown, 5 – Refueling

Definition(s):

UNPLANNED-. A parameter change or an event that is not 1) the result of an intended evolution or 2) an expected plant response to a transient. The cause of the parameter change or event may be known or unknown.

Basis:

In Cold Shutdown mode, the RCS will normally be intact and standard RPV level monitoring means are available. RPV level in the Refueling mode is normally monitored using the Shutdown Range or temporary RPV shutdown level transmitter (ref. 1).

If RPV level monitoring capability is unavailable, the RPV inventory loss must be detected by the leakage indications listed in Table C-1. Level increases must be evaluated against other potential sources of leakage such as cooling water sources inside the drywell to ensure they are indicative of RPV leakage.

Rise in drywell equipment drain tank level and drywell floor sump level is the normal method of monitoring and calculating leakage from the RPV (ref. 2). A Reactor Building sump level rise may also be indicative of RCS inventory losses external to the Primary Containment from

systems connected to the RPV. With RHR System operating in the Shutdown Cooling mode, an unexplained rise in suppression pool water level could be indicative of RHR valve misalignment or leakage (ref. 3, 4). If the make-up rate to the RPV unexplainably rises above the pre-established rate, a loss of RPV inventory may be occurring even if the source of the leakage cannot be immediately identified. Visual observation of leakage from systems connected to the RCS that cannot be isolated could be indicative of a loss of RPV inventory.

This IC addresses a significant and prolonged loss of RPV inventory control and makeup capability leading to IMMINENT fuel damage. The lost inventory may be due to a RCS component failure, a loss of configuration control or prolonged boiling of reactor coolant. These conditions entail major failures of plant functions needed for protection of the public and thus warrant a Site Area Emergency declaration.

Following an extended loss of core decay heat removal and inventory makeup, decay heat will cause reactor coolant boiling and a further reduction in reactor vessel level. If RPV level cannot be restored, fuel damage is probable.

The 30-minute criterion is tied to a readily recognizable event start time (i.e., the total loss of ability to monitor level), and allows sufficient time to monitor, assess and correlate reactor and plant conditions to determine if core uncovery has actually occurred (i.e., to account for various accident progression and instrumentation uncertainties). It also allows sufficient time for performance of actions to terminate leakage, recover inventory control/makeup equipment and/or restore level monitoring.

The inability to monitor RPV level may be caused by instrumentation and/or power failures, or water level dropping below the range of available instrumentation. If water level cannot be monitored, operators may determine that an inventory loss is occurring by observing changes in sump and/or tank levels. Sump and/or tank level changes must be evaluated against other potential sources of water flow to ensure they are indicative of leakage from the RCS.

This EAL addresses concerns raised by Generic Letter 88-17, Loss of Decay Heat Removal; SECY 91-283, Evaluation of Shutdown and Low Power Risk Issues; NUREG-1449, Shutdown and Low-Power Operation at Commercial Nuclear Power Plants in the United States; and NUMARC 91-06, Guidelines for Industry Actions to Assess Shutdown Management.

Escalation of the emergency classification level would be via IC CG1 or RG1

Basis Reference(s):

1. IC 180 005 Installation and Removal of Temporary Unit 1 RPV Shutdown Level Transmitter
2. ON-100(200)-005 Excess Drywell Leakage Identification
3. OP-149(249)-002 RHR Operation in Shutdown Cooling Mode
4. ON-149(249)-001 Loss of RHR Shutdown Cooling Mode
5. NEI 99-01 CS1

Category: C – Cold Shutdown / Refueling System Malfunction

Subcategory: 1 – RPV Level

Initiating Condition: Loss of RPV inventory

EAL:

CA1.1 Alert

Loss of RPV inventory as indicated by RPV level < -38 in. (Level 2)

Mode Applicability:

4 - Cold Shutdown, 5 – Refueling

Definition(s):

None

Basis:

The threshold RPV level of -38 in. is the low-low ECCS actuation setpoint (ref. 1). RPV level is normally monitored using the instruments in Figure C-1 (ref. 1, 2).

When reactor vessel water level drops to -38 in. high pressure steam-driven injection sources HPCI (ECCS) and RCIC receive an initiation signal (ref. 1, 2). Although these systems cannot restore RCS inventory in the cold condition, the Level 2 actuation setpoint is operationally significant and is indicative of a loss of RCS inventory significantly below the low level scram setpoint specified in CU1.1.

This IC addresses conditions that are precursors to a loss of the ability to adequately cool irradiated fuel (i.e., a precursor to a challenge to the fuel clad barrier). This condition represents a potential substantial reduction in the level of plant safety.

For this EAL, a lowering of water level below - 38 in. indicates that operator actions have not been successful in restoring and maintaining RPV water level. The heat-up rate of the coolant will increase as the available water inventory is reduced. A continuing decrease in water level will lead to core uncovery.

Although related, this EAL is concerned with the loss of RCS inventory and not the potential concurrent effects on systems needed for decay heat removal (e.g., loss of a Residual Heat Removal suction point). An increase in RCS temperature caused by a loss of decay heat removal capability is evaluated under IC CA4.

If RPV water level continues to lower, then escalation to Site Area Emergency would be via IC CS1.

Basis Reference(s):

1. M-142 P&ID Nuclear Boiler Vessel Instrumentation, Sheets 1, 2
2. ON-145(245)-004 RPV Water Level Anomaly
3. NEI 99-01 CA1

Figure C-1 RPV Levels (ref. 1, 2)

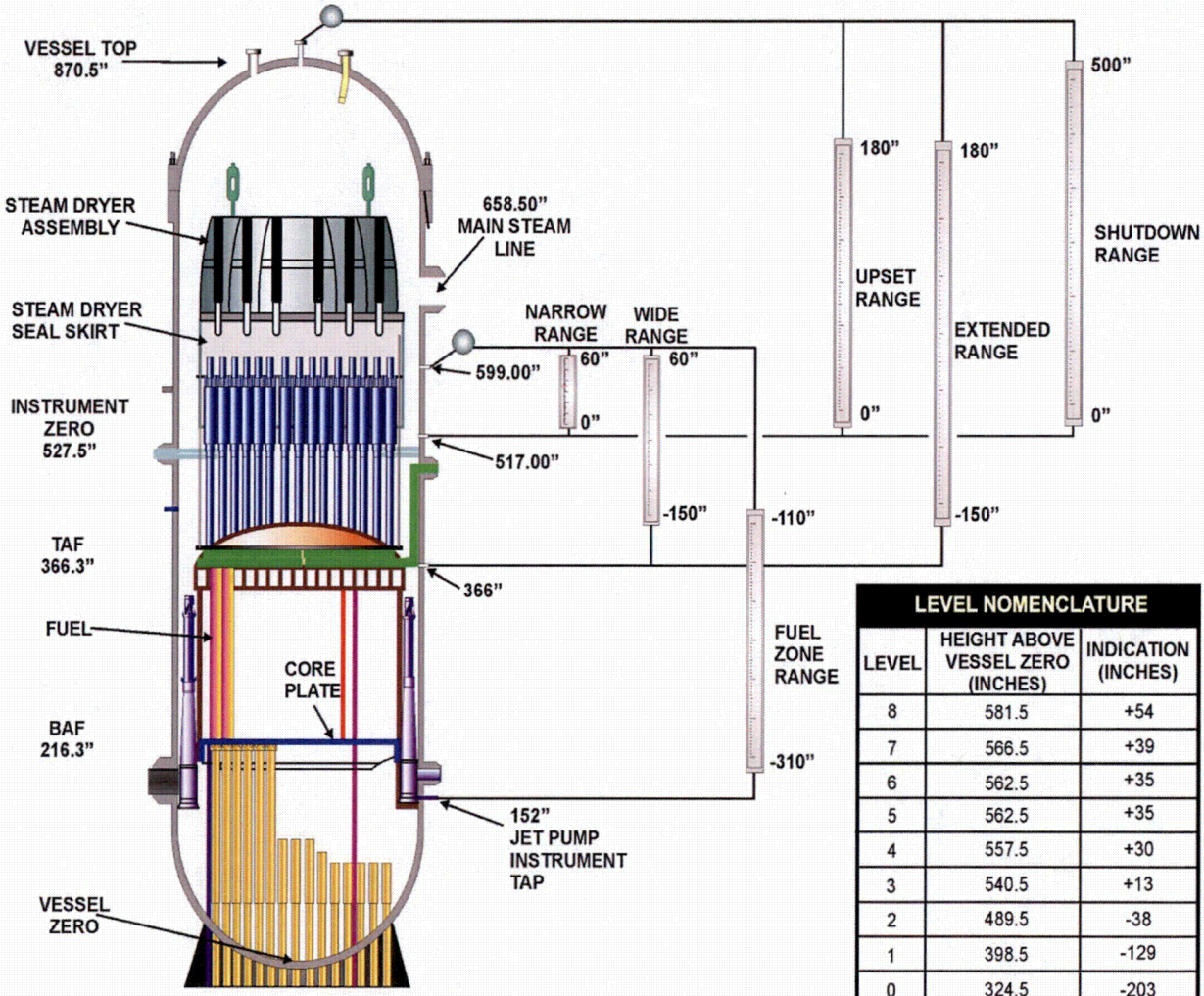

LEVEL NOMENCLATURE		
LEVEL	HEIGHT ABOVE VESSEL ZERO (INCHES)	INDICATION (INCHES)
8	581.5	+54
7	566.5	+39
6	562.5	+35
5	562.5	+35
4	557.5	+30
3	540.5	+13
2	489.5	-38
1	398.5	-129
0	324.5	-203

Category: C – Cold Shutdown / Refueling System Malfunction

Subcategory: 1 – RPV Level

Initiating Condition: Loss of RPV inventory

EAL:

CA1.2 Alert

RPV level cannot be monitored for ≥15 min. (Note 1)

AND

UNPLANNED increase in **any** Table C-1 sump or tank levels due to a loss of RPV inventory

Note 1: The ED/RM should declare the event promptly upon determining that time limit has been exceeded, or will likely be exceeded.

Table C-1 Sumps & Tanks
• Drywell equipment drain tank • Drywell sumps • Reactor Building sump • LRW collection tanks • Main condenser hotwell • Suppression pool • Visual observation

Mode Applicability:

4 - Cold Shutdown, 5 – Refueling

Definition(s):

UNPLANNED-. A parameter change or an event that is not 1) the result of an intended evolution or 2) an expected plant response to a transient. The cause of the parameter change or event may be known or unknown.

Basis:

In Cold Shutdown mode, the RCS will normally be intact and standard RPV level monitoring means are available. RPV level in the Refueling mode is normally monitored using the Shutdown Range or temporary RPV shutdown level transmitter (ref. 1).

In this EAL, all water level indication is unavailable for greater than 15 minutes and the RPV inventory loss must be detected by the leakage indications listed in Table C-1. Level increases must be evaluated against other potential sources of leakage such as cooling water sources inside the drywell to ensure they are indicative of RPV leakage. Rise in drywell equipment drain tank level and drywell floor sump level is the normal method of monitoring and calculating leakage from the RPV (ref. 2). A Reactor Building sump level rise may also be indicative of RCS inventory losses external to the Primary Containment from systems connected to the RPV. With

RHR System operating in the Shutdown Cooling mode, an unexplained rise in suppression pool water level could be indicative of RHR valve misalignment or leakage (ref. 3, 4). If the make-up rate to the RPV unexplainably rises above the pre-established rate, a loss of RPV inventory may be occurring even if the source of the leakage cannot be immediately identified. Visual observation of leakage from systems connected to the RCS that cannot be isolated could be indicative of a loss of RPV inventory.

This IC addresses conditions that are precursors to a loss of the ability to adequately cool irradiated fuel (i.e., a precursor to a challenge to the fuel clad barrier). This condition represents a potential substantial reduction in the level of plant safety.

For this EAL, the inability to monitor RPV level may be caused by instrumentation and/or power failures, or water level dropping below the range of available instrumentation. If water level cannot be monitored, operators may determine that an inventory loss is occurring by observing changes in sump and/or tank levels. Sump and/or tank level changes must be evaluated against other potential sources of water flow to ensure they are indicative of leakage from the RPV.

The 15-minute duration for the loss of level indication was chosen because it is half of the EAL duration specified in IC CS1.

If the RPV inventory level continues to lower, then escalation to Site Area Emergency would be via IC CS1.

Basis Reference(s):

1. IC 180 005 Installation and Removal of Temporary Unit 1 RPV Shutdown Level Transmitter
2. ON-100(200)-005 Excess Drywell Leakage Identification
3. OP-149(249)-002 RHR Operation in Shutdown Cooling Mode
4. ON-149(249)-001 Loss of RHR Shutdown Cooling Mode
5. NEI 99-01 CA1

Category: C – Cold Shutdown / Refueling System Malfunction

Subcategory: 1 – RPV Level

Initiating Condition: UNPLANNED loss of RPV inventory for 15 minutes or longer

EAL:

CU1.1	**Unusual Event**
UNPLANNED loss of reactor coolant results in RPV level less than a required lower limit for ≥15 min. (Note 1)	

Note 1: The ED/RM should declare the event promptly upon determining that time limit has been exceeded, or will likely be exceeded.

Mode Applicability:

4 - Cold Shutdown, 5 - Refueling

Definition(s):

UNPLANNED-. A parameter change or an event that is not 1) the result of an intended evolution or 2) an expected plant response to a transient. The cause of the parameter change or event may be known or unknown.

Basis:

Figure C-1 illustrates the elevations of the RPV level instrument ranges (ref. 1).

With the plant in Cold Shutdown, RPV water level is normally maintained above the RPV low level scram setpoint of +13 in. (ref. 1, 2). However, if RPV level is being controlled below the RPV low level scram setpoint, or if level is being maintained in a designated band in the reactor vessel it is the inability to maintain level above the low end of the designated control band due to a loss of inventory resulting from a leak in the RCS that is the concern.

With the plant in Refueling mode, RPV water level is normally maintained at or above the reactor vessel flange (Technical Specifications 3.9.6 requires at least 22 ft of water above the top of the reactor vessel flange in the refueling cavity during refueling operations). The RPV flange is at an indicated level of 217.5 in. as indicated on the Shutdown Range RPV water level instrument (ref. 3).

EAL RU2.1 may also be applicable based on increasing radiation levels due to loss of inventory in the REFULING PATHWAY.

This IC addresses the inability to restore and maintain water level to a required minimum level (or the lower limit of a level band), or a loss of the ability to monitor RPV level concurrent with indications of coolant leakage. Either of these conditions is considered to be a potential degradation of the level of safety of the plant.

Refueling evolutions that decrease RCS water inventory are carefully planned and controlled. An UNPLANNED event that results in water level decreasing below a procedurally required limit warrants the declaration of an Unusual Event due to the reduced water inventory that is available to keep the core covered.

This EAL recognizes that the minimum required RPV level can change several times during the course of a refueling outage as different plant configurations and system lineups are implemented. This EAL is met if the minimum level, specified for the current plant conditions, cannot be maintained for 15 minutes or longer. The minimum level is typically specified in the applicable operating procedure but may be specified in another controlling document.

The 15-minute threshold duration allows sufficient time for prompt operator actions to restore and maintain the expected water level. This criterion excludes transient conditions causing a brief lowering of water level.

Continued loss of RCS inventory may result in escalation to the Alert emergency classification level via either IC CA1 or CA3.

Basis Reference(s):

1. M-142 P&ID Nuclear Boiler Vessel Instrumentation, Sheets 1, 2
2. ON-145(245)-004 RPV Water Level Anomaly
3. GO-100(200)-006 Cold Shutdown, Refueling and Defueled
5. NEI 99-01 CU1

Figure C-1 RPV Levels (ref. 1, 2)

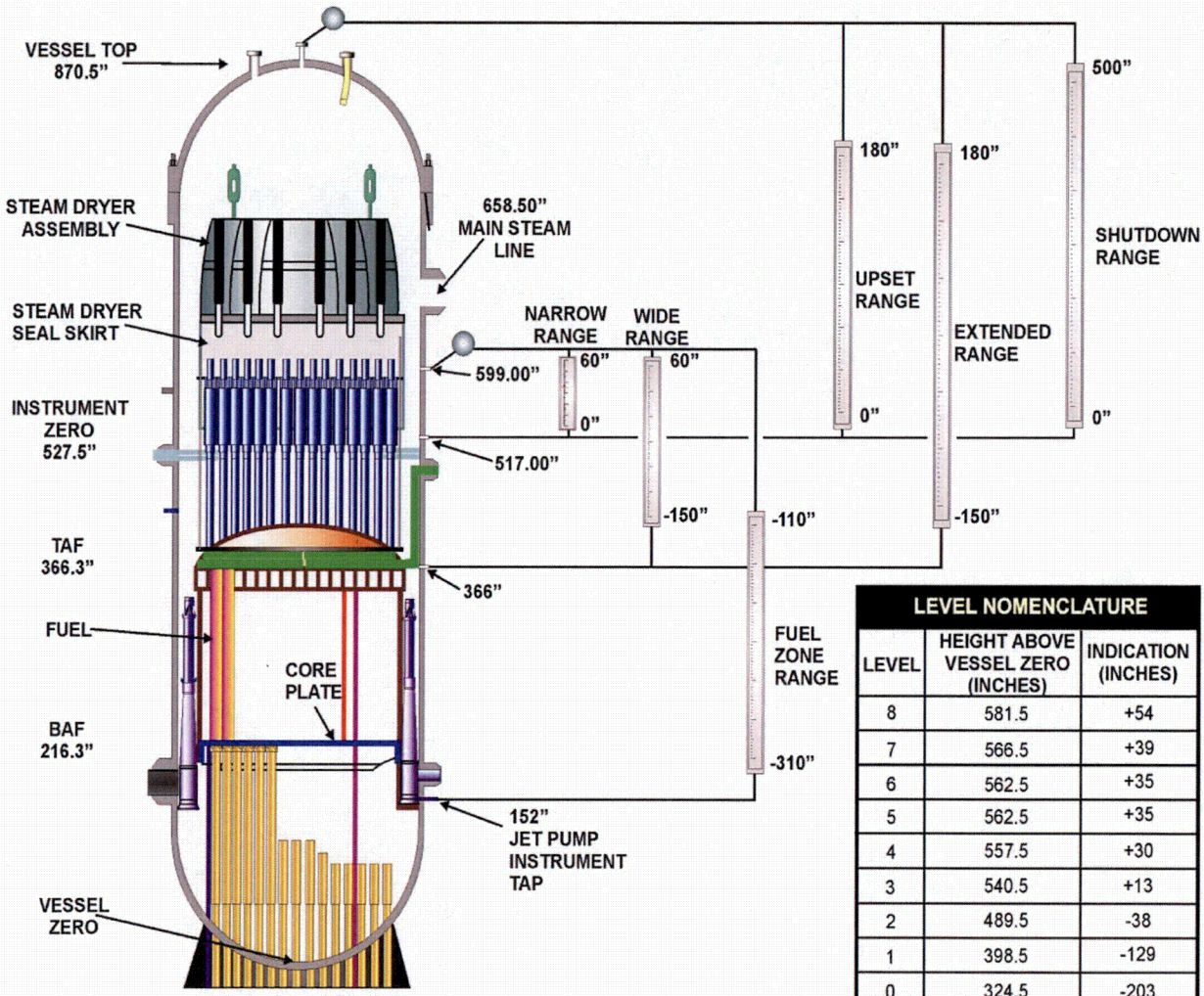

LEVEL NOMENCLATURE		
LEVEL	HEIGHT ABOVE VESSEL ZERO (INCHES)	INDICATION (INCHES)
8	581.5	+54
7	566.5	+39
6	562.5	+35
5	562.5	+35
4	557.5	+30
3	540.5	+13
2	489.5	-38
1	398.5	-129
0	324.5	-203

Category: C – Cold Shutdown / Refueling System Malfunction

Subcategory: 1 – RPV Level

Initiating Condition: UNPLANNED loss of RPV inventory for 15 minutes or longer

EAL:

CU1.2 Unusual Event

RPV water level cannot be monitored

AND

UNPLANNED increase in **any** Table C-1 sump or tank levels due to a loss of RPV inventory (Notes 1,9)

Note 1: The ED/RM should declare the event promptly upon determining that time limit has been exceeded, or will likely be exceeded.

Note 9: If the conditions specified in this EAL last longer than 15 minutes, CA1.2 applies.

Table C-1 Sumps & Tanks
• Drywell equipment drain tank • Drywell sumps • Reactor Building sump • LRW collection tanks • Main condenser hotwell • Suppression pool • Visual observation

Mode Applicability:

4 - Cold Shutdown, 5 – Refueling

Definition(s):

UNPLANNED-. A parameter change or an event that is not 1) the result of an intended evolution or 2) an expected plant response to a transient. The cause of the parameter change or event may be known or unknown.

Basis:

If the conditions specified in this EAL last longer than 15 minutes, CA1.2 applies.

In Cold Shutdown mode, the RCS will normally be intact and standard RPV level monitoring means are available. RPV level in the Refueling mode is normally monitored using the Shutdown Range or temporary RPV shutdown level transmitter (ref. 1).

In this EAL, all water level indication is unavailable and the RPV inventory loss must be detected by the leakage indications listed in Table C-1. Level increases must be evaluated against other potential sources of leakage such as cooling water sources inside the drywell to ensure they are indicative of RPV leakage. Rise in drywell equipment drain tank level and drywell floor sump level is the normal method of monitoring and calculating leakage from the RPV (ref. 2). A Reactor Building sump level rise may also be indicative of RCS inventory losses external to the Primary Containment from systems connected to the RPV. With RHR System operating in the Shutdown Cooling mode, an unexplained rise in suppression pool water level could be indicative of RHR valve misalignment or leakage (ref. 3, 4). If the make-up rate to the RPV unexplainably rises above the pre-established rate, a loss of RPV inventory may be occurring even if the source of the leakage cannot be immediately identified. Visual observation of leakage from systems connected to the RCS that cannot be isolated could be indicative of a loss of RPV inventory.

This IC addresses the inability to restore and maintain water level to a required minimum level (or the lower limit of a level band), or a loss of the ability to monitor RPV level concurrent with indications of coolant leakage. Either of these conditions is considered to be a potential degradation of the level of safety of the plant.

Refueling evolutions that decrease RCS water inventory are carefully planned and controlled. An UNPLANNED event that results in water level decreasing below a procedurally required limit warrants the declaration of an Unusual Event due to the reduced water inventory that is available to keep the core covered.

This EAL addresses a condition where all means to determine RPV level have been lost. In this condition, operators may determine that an inventory loss is occurring by observing changes in sump and/or tank levels. Sump and/or tank level changes must be evaluated against other potential sources of water flow to ensure they are indicative of leakage from the RPV.

Continued loss of RCS inventory may result in escalation to the Alert emergency classification level via either IC CA1 or CA4.

Basis Reference(s):

1. IC 180 005 Installation and Removal of Temporary Unit 1 RPV Shutdown Level Transmitter
2. ON-100(200)-005 Excess Drywell Leakage Identification
3. OP-149(249)-002 RHR Operation in Shutdown Cooling Mode
4. ON-149(249)-001 Loss of RHR Shutdown Cooling Mode
5. NEI 99-01 CU1

Category: C – Cold Shutdown / Refueling System Malfunction

Subcategory: 2 – Loss of Emergency AC Power

Initiating Condition: Loss of **all** offsite and **all** onsite AC power to essential buses for 15 minutes or longer

EAL:

CA2.1 Alert

Loss of **ALL** offsite and **ALL** onsite AC power capability to **ALL** 4.16 kV ESS buses on **EITHER** unit for
≥15 min. (Note 1)

Note 1: The ED/RM should declare the event promptly upon determining that time limit has been exceeded, or will likely be exceeded.

Mode Applicability:

4 - Cold Shutdown, 5 - Refueling, D - Defueled

Basis:

The Class 1E 4.16 kV system supplies all the Engineered Safety Feature (ESF) loads and other loads that are needed for a safe and orderly plant shutdown, and for keeping the plant in a safe shutdown condition. See Figure C-2 (ref. 1, 2) The eight Class 1E 4.16 kV ESS Buses 1(2)A through 1(2)D receive power from either the four ESS 13.8/4.16 kV transformers or the diesel generators (A, B, C, D and additional diesel generator E). Buses 1A-1D supply Unit 1 and common loads and Buses 2A-2D supply Unit 2 loads. This configuration prevents a loss of all ESS Buses for one unit in the event one of the ESS Transformers is lost.

During normal plant operation, ESS Transformer 101 supplies preferred power to ESS Bus 1A and 2A and is an alternate power supply to ESS bus 1D and 2D. ESS Transformer 111 supplies preferred power to ESS Bus 1C and 2C, and is an alternate power supply to ESS bus 1B and 2B. ESS Transformer 201 supplies preferred power to ESS Bus 1D and 2D, and is an alternate power supply to ESS bus 1A and 2A. ESS Transformer 211 supplies preferred power to ESS Bus 1B and 2B, and is an alternate power supply to ESS bus 1C and 2C.

On a loss of a preferred power source, the bus rapidly transfers to the alternate power source to maintain component power. If both the preferred and alternate power sources are lost, the associated standby diesel generator connects to the ESS bus. (ref. 2-6)

This cold condition EAL is equivalent to the hot condition loss of all offsite AC power EAL SS1.1.

This IC addresses a total loss of AC power that compromises the performance of all SAFETY SYSTEMS requiring electric power including those necessary for emergency core cooling, containment heat removal/pressure control, spent fuel heat removal and the ultimate heat sink.

When in the cold shutdown, refueling, or defueled mode, this condition is not classified as a Site Area Emergency because of the increased time available to restore an emergency bus to service. Additional time is available due to the reduced core decay heat load, and the lower temperatures and pressures in various plant systems. Thus, when in these modes, this

condition represents an actual or potential substantial degradation of the level of safety of the plant.

Fifteen minutes was selected as a threshold to exclude transient or momentary power losses.

Escalation of the emergency classification level would be via IC CS1 or RS1.

Basis Reference(s):

1. FSAR Section 8.2 Offsite Power System
2. FSAR Section 8.3 Onsite Power System
3. Technical Specifications 3.8.2 AC Sources – Shutdown
4. Technical Specifications 3.8.8 Distribution System – Shutdown
5. ON-104 (204)-001 Units 1(2) Response to Loss of All Offsite Power
6. EO-100 (200)-030 UNIT 1(2) Response to Station Blackout
7. NEI 99-01 CA2

Figure C-2 ESS 13.8/4.16 kV Transformers and Distribution (ref. 1)

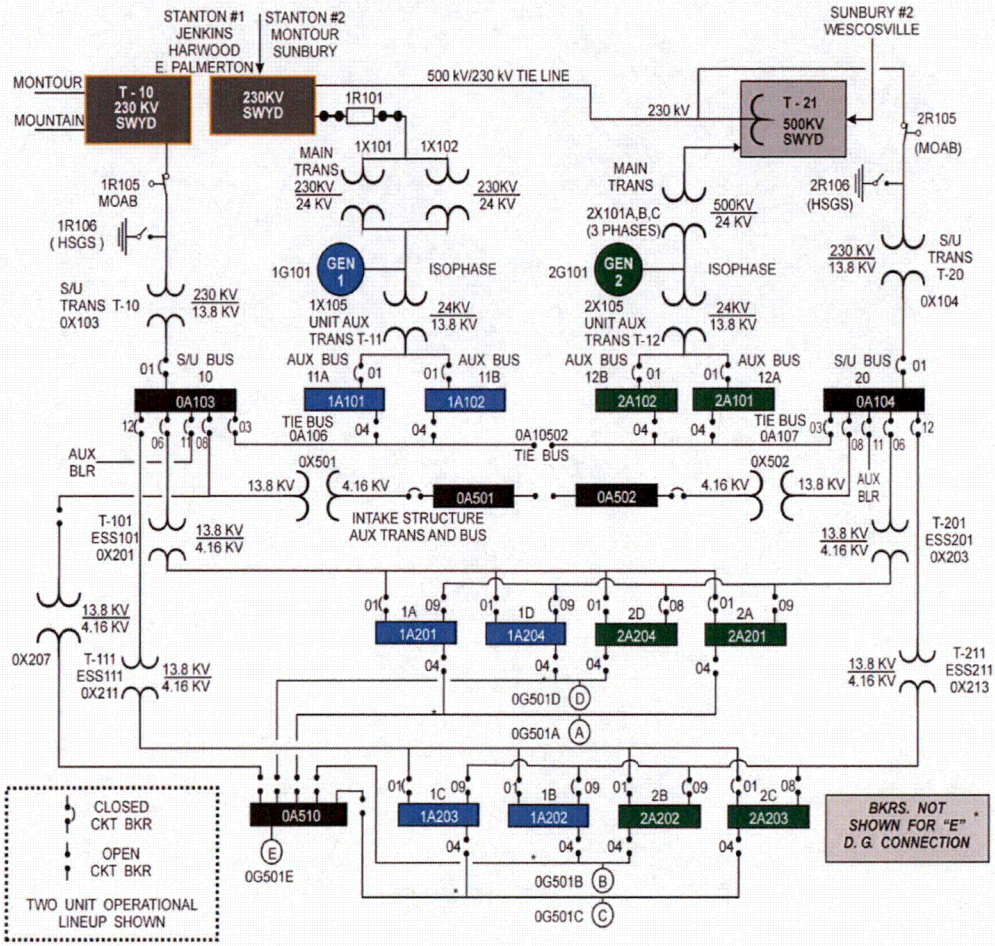

Category: C – Cold Shutdown / Refueling System Malfunction

Subcategory: 2 – Loss of Emergency AC Power

Initiating Condition: Loss of **all** but one AC power source to essential buses for 15 minutes or longer

EAL:

CU2.1 Unusual Event

AC power capability to **ALL** 4.16 kV ESS buses on **EITHER** unit (Table C-7) reduced to a single power source for ≥15 min. (Note 1)

AND

Any additional single power source failure will result in loss of **ALL** AC power to SAFETY SYSTEMS

Note 1: The ED/RM should declare the event promptly upon determining that time limit has been exceeded, or will likely be exceeded.

Table C-7 AC 4.16 kV ESS buses
Unit 1: • 1A201 • 1A202 • 1A203 • 1A204 **Unit 2:** • 2A201 • 2A202 • 2A203 • 2A204

Mode Applicability:

4 - Cold Shutdown, 5 – Refueling, D - Defueled

Definition(s):

SAFETY SYSTEM - A system required for safe plant operation, cooling down the plant and/or placing it in the cold shutdown condition, including the ECCS. These are typically systems classified as safety-related (as defined in 10CFR50.2):

Those structures, systems and components that are relied upon to remain functional during and following design basis events to assure:

(1) The integrity of the reactor coolant pressure boundary;

(2) The capability to shut down the reactor and maintain it in a safe shutdown condition;

(3) The capability to prevent or mitigate the consequences of accidents which could result in potential offsite exposures.

Basis:

The Class 1E 4.16 kV system supplies all the Engineered Safety Feature (ESF) loads and other loads that are needed for a safe and orderly plant shutdown, and for keeping the plant in a safe shutdown condition. See Figure C-2 (ref. 1, 2) The eight Class 1E 4.16 kV ESS Buses 1(2)A through 1(2)D receive power from either the four ESS 13.8/4.16 kV transformers or the diesel generators (A, B, C, D and additional diesel generator E). Buses 1A-1D supply Unit 1 and common loads and Buses 2A-2D supply Unit 2 loads. This configuration prevents a loss of all ESS Buses for one unit in the event one of the ESS Transformers is lost.

During normal plant operation, ESS Transformer 101 supplies preferred power to ESS Bus 1A and 2A and is an alternate power supply to ESS bus 1D and 2D. ESS Transformer 111 supplies preferred power to ESS Bus 1C and 2C, and is an alternate power supply to ESS bus 1B and 2B. ESS Transformer 201 supplies preferred power to ESS Bus 1D and 2D, and is an alternate power supply to ESS bus 1A and 2A. ESS Transformer 211 supplies preferred power to ESS Bus 1B and 2B, and is an alternate power supply to ESS bus 1C and 2C.

On a loss of a preferred power source, the bus rapidly transfers to the alternate power source to maintain component power. If both the preferred and alternate power sources are lost, the associated standby diesel generator connects to the ESS bus. (ref. 2-6)

This cold condition EAL is equivalent to the hot condition EAL SA1.1.

This IC describes a significant degradation of offsite and onsite AC power sources such that any additional single failure would result in a loss of all AC power to SAFETY SYSTEMS. In this condition, the sole AC power source may be powering one, or more than one, train of safety-related equipment.

When in the cold shutdown, refueling, or defueled mode, this condition is not classified as an Alert because of the increased time available to restore another power source to service. Additional time is available due to the reduced core decay heat load, and the lower temperatures and pressures in various plant systems. Thus, when in these modes, this condition is considered to be a potential degradation of the level of safety of the plant.

An "AC power source" is a source recognized in AOPs, and capable of supplying required power to an emergency bus. Some examples of this condition are presented below.

- A loss of all offsite power with a concurrent failure of one division of emergency power sources (e.g., onsite diesel generators).
- A loss of all offsite power and loss of all emergency power sources (e.g., onsite diesel generators) with a single train of emergency buses being back-fed from the unit main generator.
- A loss of emergency power sources (e.g., onsite diesel generators) with a single division of emergency buses being back-fed from an offsite power source.

Fifteen minutes was selected as a threshold to exclude transient or momentary losses of power.

The subsequent loss of the remaining single power source would escalate the event to an Alert in accordance with IC CA2.

Basis Reference(s):

1. FSAR Section 8.2 Offsite Power System
2. FSAR Section 8.3 Onsite Power System
3. Technical Specifications 3.8.2 AC Sources – Shutdown
4. Technical Specifications 3.8.8 Distribution System – Shutdown
5. ON-104 (204)-001 Units 1(2) Response to Loss of All Offsite Power
6. EO-100 (200)-030 UNIT 1(2) Response to Station Blackout
7. NEI 99-01 CU2

Figure C-2 ESS 13.8/4.16 kV Transformers and Distribution (ref. 1)

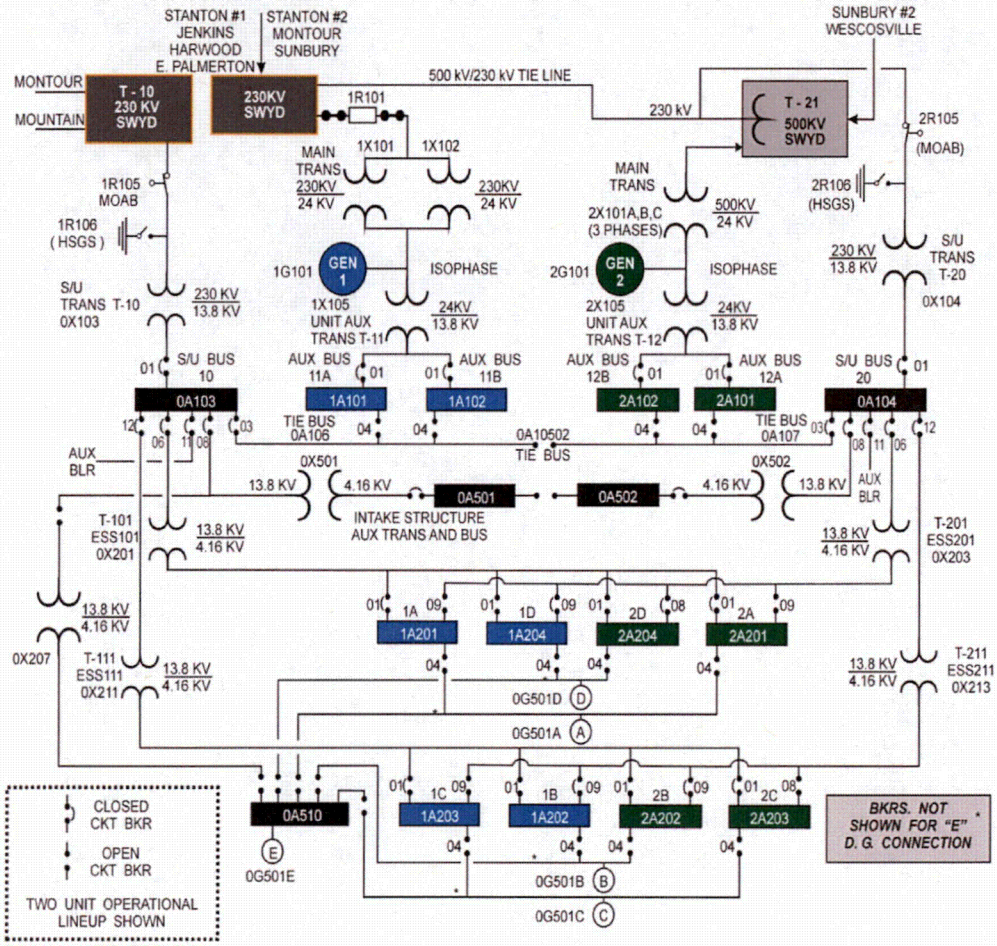

Category: C – Cold Shutdown / Refueling System Malfunction

Subcategory: 3 – Loss of Vital DC Power

Initiating Condition: Loss of vital DC power for 15 minutes or longer

EAL:

CU3.1	**Unusual Event**
< 105 VDC bus voltage indications on Technical Specification **required** 125 VDC buses for ≥15 min. (Note 1)	

Note 1: The ED/RM should declare the event promptly upon determining that time limit has been exceeded, or will likely be exceeded.

Mode Applicability:

4 - Cold Shutdown, 5 - Refueling

Definition(s):

None

Basis:

The Class 1E Battery Banks are 1(2)D610 (Channel A), 1(2)D620 (Channel B), 1(2)D630 (Channel C), and 1(2)D640 (Channel D). Each bank consists of 60 cells connected in series. Each cell produces a nominal voltage of 2.06 VDC resulting in a total battery bank terminal voltage of 123.6 VDC. All battery banks are designed to supply power to its load center for four hours in the event of a loss of power from its battery charger (ref. 1-3).

105 VDC is the minimum design voltage limit (ref. 4).

Indicated voltage for the vital 125 VDC main distribution buses is local only. Local voltage indication is available for each bus based on dispatching a field operator in accordance with Control Room alarm response procedure AR-1(2)06-001 (A12,B12,C12,D12). The 15 minute classification clock begins upon receipt of the 125V DC Panel System Trouble alarm in the Control Room. If battery voltage cannot be verified to be greater than or equal to 105 VDC within the 15 minutes, emergency classification must be made under this EAL.

This EAL is the cold condition equivalent of the hot condition loss of DC power EAL SS2.1.

This IC addresses a loss of vital DC power which compromises the ability to monitor and control operable SAFETY SYSTEMS when the plant is in the cold shutdown or refueling mode. In these modes, the core decay heat load has been significantly reduced, and coolant system temperatures and pressures are lower; these conditions increase the time available to restore a vital DC bus to service. Thus, this condition is considered to be a potential degradation of the level of safety of the plant.

As used in this EAL, "required" means the vital DC buses necessary to support operation of the in-service, or operable, train or trains of SAFETY SYSTEM equipment. For example, if Division I is out-of-service (inoperable) for scheduled outage maintenance work and Division II is in-service (operable), then a loss of Vital DC power affecting Division II would require the

declaration of an Unusual Event. A loss of Vital DC power to Division I would not warrant an emergency classification.

Fifteen minutes was selected as a threshold to exclude transient or momentary power losses.

Depending upon the event, escalation of the emergency classification level would be via IC CA1 or CA4, or an IC in Recognition Category R.

Basis Reference(s):

1. FSAR Section 8.3.2 DC Power Systems
2. Susquehanna Drawing No. E107159, Sheet 1, "Single Line Meter & Relay Diagram 125 VDC, 250 VDC & 120 VAC Systems"
3. Technical Specifications 3.8.5 DC Sources – Shutdown
4. ON-102(202)-610, -620, -630, -640 Loss of 125V DC
5. AR-1(2)06-001 Main Turbine/Generator, Computer HVAC, Instrument AC, 24V DC, 125V DC, 250V DC Panel 2C651
6. NEI 99-01 CU4

Category: C – Cold Shutdown / Refueling System Malfunction

Subcategory: 4 – RCS Temperature

Initiating Condition: Inability to maintain the plant in cold shutdown

EAL:

CA4.1 Alert

UNPLANNED increase in RCS temperature to > 200°F for > Table C-3 duration (Notes 1, 10)

OR

UNPLANNED RPV pressure increase > 10 psig due to loss of decay heat removal capability

Note 1: The ED/RM should declare the event promptly upon determining that the applicable time has been exceeded, or will likely be exceeded.

Note 10: In the absence of reliable RCS temperature indication caused by the loss of decay heat removal capability, classification should be based on the RPV pressure increase criteria when the RCS is INTACT in Mode 4 or based on time to boil data when in Mode 5 or the RCS is **not** INTACT in Mode 4.

Table C-3: RCS Heat-up Duration Thresholds

RCS Status	CONTAINMENT CLOSURE Status	Heat-up Duration
INTACT	N/A	60 min.*
Not INTACT	established	20 min.*
	not established	0 min.

* If an RCS heat removal system is in operation within this time frame and RCS temperature is being reduced, the EAL is **not** applicable.

Mode Applicability:

4 - Cold Shutdown, 5 – Refueling

Definition(s):

CONTAINMENT CLOSURE - The procedurally defined conditions or actions taken to secure Primary or Secondary Containment and its associated structures, systems, and components as a functional barrier to fission product release under shutdown conditions.

As applied to Susquehanna, CONTAINMENT CLOSURE is established per NDAP-QA-0309 (ref. 3) for Primary Containment OR is established per NDAP-QA-0321 (ref. 4) for Secondary Containment.

RCS INTACT - The RCS should be considered intact when the RCS pressure boundary is in its normal condition for the cold shutdown mode of operation (e.g., no freeze seals).

UNPLANNED -. A parameter change or an event that is not 1) the result of an intended evolution or 2) an expected plant response to a transient. The cause of the parameter change or event may be known or unknown.

Basis:

In the absence of reliable RCS temperature indication caused by the loss of decay heat removal capability, classification should be based on the RPV pressure increase criteria when the RCS is intact in Mode 4 or based on time to boil data when in Mode 5 or the RCS is not intact in Mode 4.

Available methods of determining RCS temperature can be found in Operations surveillance procedures (ref. 1, 2).

10 psig is the lowest pressure increase increment that can be reasonably read in the control room (ref. 2):

This IC addresses conditions involving a loss of decay heat removal capability or an addition of heat to the RCS in excess of that which can currently be removed. Either condition represents an actual or potential substantial degradation of the level of safety of the plant.

A momentary UNPLANNED excursion above the Technical Specification cold shutdown temperature limit when the heat removal function is available does not warrant a classification.

The RCS Heat-up Duration Thresholds table addresses an increase in RCS temperature when CONTAINMENT CLOSURE is established but the RCS is not intact.. The 20-minute criterion was included to allow time for operator action to address the temperature increase.

The RCS Heat-up Duration Thresholds table also addresses an increase in RCS temperature with the RCS intact. The status of CONTAINMENT CLOSURE is not crucial in this condition since the intact RCS is providing a high pressure barrier to a fission product release. The 60-minute time frame should allow sufficient time to address the temperature increase without a substantial degradation in plant safety.

Finally, in the case where there is an increase in RCS temperature, the RCS is not intact , and CONTAINMENT CLOSURE is not established, no heat-up duration is allowed (i.e., 0 minutes). This is because 1) the evaporated reactor coolant may be released directly into the Primary Containment or Reactor Building atmosphere and subsequently to the environment, and 2) there is reduced reactor coolant inventory above the top of irradiated fuel.

The RCS pressure increase threshold provides a pressure-based indication of RCS heat-up in the absence of RCS temperature monitoring capability.

Escalation of the emergency classification level would be via IC CS1 or RS1.

Basis Reference(s):

1. SO-100(200)-011 Reactor Vessel Temperature and Pressure Recording
2. SO-100(200)-006 Shiftly Surveillance Operating Log
3. NEI 99-01 CA3

Category: C – Cold Shutdown / Refueling System Malfunction

Subcategory: 4 – RCS Temperature

Initiating Condition: UNPLANNED increase in RCS temperature

EAL:

CU4.1	**Unusual Event**
UNPLANNED increase in RCS temperature to > 200°F due to loss of decay heat removal capability	

Mode Applicability:

4 - Cold Shutdown, 5 - Refueling

Definition(s):

UNPLANNED-. A parameter change or an event that is not 1) the result of an intended evolution or 2) an expected plant response to a transient. The cause of the parameter change or event may be known or unknown.

Basis:

In the absence of reliable RCS temperature indication caused by a loss of decay heat removal capability, classification should be based on EAL CU4.2 should RPV level indication be subsequently lost.

Available methods of determining RCS temperature can be found in Operations surveillance procedures (ref. 2, 3).

This IC addresses an UNPLANNED increase in RCS temperature above the Technical Specification cold shutdown temperature limit and represents a potential degradation of the level of safety of the plant. If the RCS is not intact and CONTAINMENT CLOSURE is not established during this event, the Emergency Director/Recovery Manager should also refer to IC CA4.

A momentary UNPLANNED excursion above the Technical Specification cold shutdown temperature limit when the heat removal function is available does not warrant a classification.

This EAL involves a loss of decay heat removal capability, or an addition of heat to the RCS in excess of that which can currently be removed, such that reactor coolant temperature cannot be maintained below the cold shutdown temperature limit specified in Technical Specifications. During this condition, there is no immediate threat of fuel damage because the core decay heat load has been reduced since the cessation of power operation.

During an outage, the level in the reactor vessel will normally be maintained at or above the reactor vessel flange. Refueling evolutions that lower water level below the reactor vessel flange are carefully planned and controlled. A loss of forced decay heat removal at reduced inventory may result in a rapid increase in reactor coolant temperature depending on the time after shutdown.

Escalation to Alert would be via IC CA1 based on an inventory loss or IC CA4 based on exceeding plant configuration-specific time criteria.

Basis Reference(s):

1. Technical Specifications Table 1.1-1
2. SO-100(200)-011 Reactor Vessel Temperature and Pressure Recording
3. SO-100(200)-006 Shiftly Surveillance Operating Log
4. NEI 99-01 CU3

Category: C – Cold Shutdown / Refueling System Malfunction

Subcategory: 4 – RCS Temperature

Initiating Condition: UNPLANNED increase in RCS temperature

EAL:

CU4.2	**Unusual Event**
Loss of **ALL** RCS temperature and RPV level indication for ≥15 min. (Note 1)	

Note 1: The ED/RM should declare the event promptly upon determining that time limit has been exceeded, or will likely be exceeded.

Mode Applicability:

4 - Cold Shutdown, 5 - Refueling

Definition(s):

None

Basis:

Available methods of determining RCS temperature can be found in Operations surveillance procedures (ref. 4, 5).

RPV level is normally monitored using the instruments in Figure C-2 (ref. 1, 2).

This EAL addresses the inability to determine RCS temperature and RPV level, and represents a potential degradation of the level of safety of the plant. If the RCS is not intact and CONTAINMENT CLOSURE is not established during this event, the Emergency Director/Recovery Manager should also refer to IC CA4.

This EAL reflects a condition where there has been a significant loss of instrumentation capability necessary to monitor RCS conditions and operators would be unable to monitor key parameters necessary to assure core decay heat removal. During this condition, there is no immediate threat of fuel damage because the core decay heat load has been reduced since the cessation of power operation.

Fifteen minutes was selected as a threshold to exclude transient or momentary losses of indication.

Escalation to Alert would be via IC CA1 based on an inventory loss or IC CA4 based on exceeding plant configuration-specific time criteria.

Basis Reference(s):

1. M-142 P&ID Nuclear Boiler Vessel Instrumentation, Sheets 1, 2
2. ON-145(245)-004 RPV Water Level Anomaly
3. Technical Specifications Table 1.1-1
4. SO-100(200)-011 Reactor Vessel Temperature and Pressure Recording

5. SO-100(200)-006 Shiftly Surveillance Operating Log
6. NEI 99-01 CU3

Figure C-2 RPV Levels (ref. 1, 2)

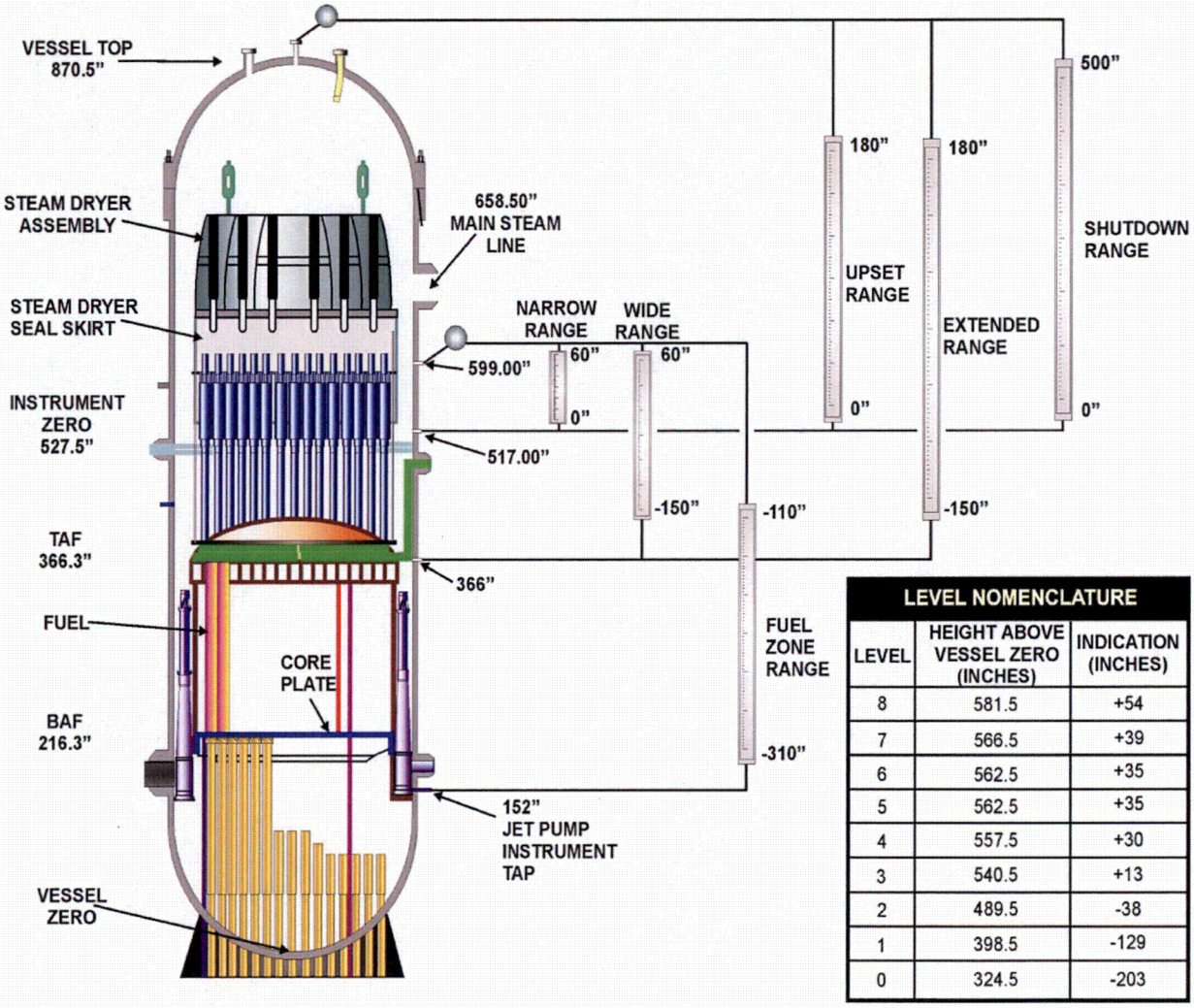

LEVEL NOMENCLATURE		
LEVEL	HEIGHT ABOVE VESSEL ZERO (INCHES)	INDICATION (INCHES)
8	581.5	+54
7	566.5	+39
6	562.5	+35
5	562.5	+35
4	557.5	+30
3	540.5	+13
2	489.5	-38
1	398.5	-129
0	324.5	-203

Category: C – Cold Shutdown / Refueling System Malfunction

Subcategory: 5 – Loss of Communications

Initiating Condition: Loss of **all** onsite or offsite communications capabilities

EAL:

CU5.1 Unusual Event

Loss of **ALL** Table C-4 onsite communication methods

OR

Loss of **ALL** Table C-4 ORO communication methods

OR

Loss of **ALL** Table C-4 NRC communication methods

Table C-4 Communication Methods

System	Onsite	ORO	NRC
UHF Radio	X		
Plant PA System	X		
Dedicated Conference Lines		X	
Commercial Telephone Systems	X	X	X
Cellular Telephone		X	X
FTS-2001 (ENS)		X	X

Mode Applicability:

4 - Cold Shutdown, 5 - Refueling, D – Defueled

Definition(s):

None

Basis:

Onsite/offsite communications include one or more of the systems listed in Table C-4 (ref. 1, 2, 3).

UHF Radio

Onsite portable radio communication systems are described in the Susquehanna SES Physical Security Plan and in the Susquehanna SES Emergency Plan. Four UHF channels, each

consisting of two frequencies for duplex operation through one of five in-plant repeaters, provide onsite portable radio communications. Operations is assigned two channels; one channel is assigned to Unit 1 and one to Unit 2. Operators in the plant on rounds and on specific assignments are equipped with handheld two-way radios.

Plant PA System

The plant PA system is an intra-plant public address providing the following functions:

- A 5-channel page-talk handset intercom system for on-site communications between plant locations.
- Broadcast accountability and fire alarms designed to warn personnel of emergency conditions.

The system consists of telephone handsets, amplifiers and loudspeakers located at various selected areas throughout the plant.

Dedicated Conference Lines (Centrex Three (3) digit dialing)

The Dedicated Conference Lines are those normally used to communicate with several offsite agencies at one time (e.g., 191 conference line).

Commercial Telephone Systems

Two independent telecommunications networks exist to provide primary and backup telephone communications between ERFs and offsite agencies.

Plant Cellular Telephone

Cell phones can be utilized to perform both ORO and NRC communications.

FTS 2001 (ENS)

This system is for NRC offsite communications but may also be used to perform ORO notifications.

This EAL is the cold condition equivalent of the hot condition EAL SU7.1.

This IC addresses a significant loss of on-site or offsite communications capabilities. While not a direct challenge to plant or personnel safety, this event warrants prompt notifications to OROs and the NRC.

This IC should be assessed only when extraordinary means are being utilized to make communications possible (e.g., use of non-plant, privately owned equipment, relaying of on-site information via individuals or multiple radio transmission points, individuals being sent to offsite locations, etc.).

The first EAL condition addresses a total loss of the communications methods used in support of routine plant operations.

The second EAL condition addresses a total loss of the communications methods used to notify all OROs of an emergency declaration. The OROs referred to here are the Commonwealth of Pennsylvania, Luzerne and Columbia County EOCs

The third EAL addresses a total loss of the communications methods used to notify the NRC of an emergency declaration.

Basis Reference(s):

1. EP-RM-007 Emergency Telephone Instructions and Directory
2. SSES Emergency Plan Section 8
3. FSAR Section 9.5.2
4. NEI 99-01 CU5

Category: C – Cold Shutdown / Refueling System Malfunction

Subcategory: 6 – Hazardous Event Affecting Safety Systems

Initiating Condition: Hazardous event affecting a SAFETY SYSTEM needed for the current operating mode

EAL:

CA6.1 Alert

The occurrence of **any** Table C-5 hazardous event

AND

EITHER:

- Event damage has caused indications of degraded performance in at least one train of a SAFETY SYSTEM needed for the current operating mode
- The event has caused VISIBLE DAMAGE to a SAFETY SYSTEM component or structure needed for the current operating mode

Table C-5 Hazardous Events
• Seismic event (earthquake) • Internal or external FLOODING event • High winds or tornado strike • FIRE • EXPLOSION • Other events with similar hazard characteristics as determined by the Shift Manager

Mode Applicability:

4 - Cold Shutdown, 5 - Refueling

Definition(s):

EXPLOSION - A rapid, violent and catastrophic failure of a piece of equipment due to combustion, chemical reaction or overpressurization. A release of steam (from high energy lines or components) or an electrical component failure (caused by short circuits, grounding, arcing, etc.) should not automatically be considered an explosion. Such events require a post-event inspection to determine if the attributes of an explosion are present.

FIRE - Combustion characterized by heat and light. Sources of smoke such as slipping drive belts or overheated electrical equipment do not constitute fires. Observation of flame is preferred but is NOT required if large quantities of smoke and heat are observed.

FLOODING - A condition where water is entering a room or area faster than installed equipment is capable of removal, resulting in a rise of water level within the room or area.

SAFETY SYSTEM - A system required for safe plant operation, cooling down the plant and/or placing it in the cold shutdown condition, including the ECCS. These are typically systems classified as safety-related (as defined in 10CFR50.2):

Those structures, systems and components that are relied upon to remain functional during and following design basis events to assure:

(1) The integrity of the reactor coolant pressure boundary;

(2) The capability to shut down the reactor and maintain it in a safe shutdown condition;

(3) The capability to prevent or mitigate the consequences of accidents which could result in potential offsite exposures.

VISIBLE DAMAGE - Damage to a component or structure that is readily observable without measurements, testing, or analysis. The visual impact of the damage is sufficient to cause concern regarding the operability or reliability of the affected component or structure.

Basis:

- The significance of a seismic event is discussed under EAL HU2.1 (ref. 1, 2).
- Internal FLOODING may be caused by events such as component failures, equipment misalignment, or outage activity mishaps (ref. 3, 4, 5).
- Seismic Category I structures are analyzed to withstand a sustained, design wind velocity of at least 80 mph. (ref. 6, 7).
- Areas containing functions and systems required for safe shutdown of the plant are identified by Fire Zone in the fire response procedure (ref. 8, 9).
- An EXPLOSION that degrades the performance of a SAFETY SYSTEM train or visibly damages a SAFETY SYSTEM component or structure would be classified under this EAL.

This IC addresses a hazardous event that causes damage to a SAFETY SYSTEM, or a structure containing SAFETY SYSTEM components, needed for the current operating mode. This condition significantly reduces the margin to a loss or potential loss of a fission product barrier, and therefore represents an actual or potential substantial degradation of the level of safety of the plant.

The first conditional addresses damage to a SAFETY SYSTEM train that is in service/operation since indications for it will be readily available. The indications of degraded performance should be significant enough to cause concern regarding the operability or reliability of the SAFETY SYSTEM train.

The second conditional addresses damage to a SAFETY SYSTEM component that is not in service/operation or readily apparent through indications alone, or to a structure containing SAFETY SYSTEM components. Operators will make this determination based on the totality of

available event and damage report information. This is intended to be a brief assessment not requiring lengthy analysis or quantification of the damage.

Escalation of the emergency classification level would be via IC CS1 or RS1.

Basis Reference(s):

1. ON-000-002 Severe Weather / Natural Phenomena
2. FSAR Section 3.7 Seismic Design
3. ON-169(269)-001 Flooding in Turbine Building
4. ON-169(269)-002 Flooding in Reactor Building
5. FSAR Section 3.4 Water Level (Flood) Design
6. FSAR Section 3.3 Wind and Tornado Loadings
7. FSAR Section 3.5 Missile Projection
8. SSES-FPRR Section 6.2 Fire Area Description
9. ON-013-001 Response to Fire
9. NEI 99-01 CA6

Category H – Hazards and Other Conditions Affecting Plant Safety

EAL Group: ANY (EALs in this category are applicable to any plant condition, hot or cold.)

Hazards are non-plant, system-related events that can directly or indirectly affect plant operation, reactor plant safety or personnel safety.

1. Security

Unauthorized entry attempts into the Protected Area, bomb threats, sabotage attempts, and actual security compromises threatening loss of physical control of the plant.

2. Seismic Event

Natural events such as earthquakes have potential to cause plant structure or equipment damage of sufficient magnitude to threaten personnel or plant safety.

3. Natural or Technology Hazard

Other natural and non-naturally occurring events that can cause damage to plant facilities include tornados, FLOODING, hazardous material releases and events restricting site access warranting classification.

4. Fire

Fires can pose significant hazards to personnel and reactor safety. Appropriate for classification are fires within the site Protected Area or which may affect operability of equipment needed for safe shutdown

5. Hazardous Gas

Toxic, corrosive, asphyxiant or flammable gas leaks can affect normal plant operations or preclude access to plant areas required to safely shutdown the plant.

6. Control Room Evacuation

If the Control Room must be evacuated, additional support for monitoring and controlling plant functions is necessary through the emergency response facilities.

7. ED/RM Judgment

The EALs defined in other categories specify the predetermined symptoms or events that are indicative of emergency or potential emergency conditions and thus warrant classification. While these EALs have been developed to address the full spectrum of possible emergency conditions which may warrant classification and subsequent implementation of the Emergency Plan, a provision for classification of emergencies based on operator/management experience and judgment is still necessary. The EALs of this category provide the Emergency Director/Recovery Manager the latitude to classify emergency conditions consistent with the established classification criteria based upon Emergency Director/Recovery Manager judgment.

Category: H – Hazards

Subcategory: 1 – Security

Initiating Condition: HOSTILE ACTION resulting in loss of physical control of the facility

EAL:

HG1.1 General Emergency

A HOSTILE ACTION is occurring or has occurred within the PROTECTED AREA as reported by the Security Shift Supervision

AND

EITHER of the following has occurred:

Any of the following safety functions **cannot** be controlled or maintained

- Reactivity
- RPV water level
- RCS heat removal

OR

Damage to spent fuel has occurred or is IMMINENT

Mode Applicability:

All

Definition(s):

HOSTILE ACTION - An act toward Susquehanna or its personnel that includes the use of violent force to destroy equipment, take hostages, and/or intimidate the licensee to achieve an end. This includes attack by air, land, or water using guns, explosives, projectiles, vehicles, or other devices used to deliver destructive force. Other acts that satisfy the overall intent may be included. Hostile action should not be construed to include acts of civil disobedience or felonious acts that are not part of a concerted attack on Susquehanna. Non-terrorism-based EALs should be used to address such activities (i.e., this may include violent acts between individuals in the OWNER CONTROLLED AREA).

PROTECTED AREA - Area within the station inner security fence (PROTECTED AREA Barrier) designated to implement the requirements of 10 CFR 73.

Basis:

Security Shift Supervision are the designated on-site personnel qualified and trained to confirm that a security event is occurring or has occurred. Training on security event classification confirmation is closely controlled due to the strict secrecy controls placed on the SSES Physical Security Plan (Safeguards) information (ref. 1).

This IC does not apply to a HOSTILE ACTION directed at an ISFSI PROTECTED AREA; such an attack should be assessed using IC HA1.

If the plant equipment necessary to maintain the safety functions can be controlled from another location, then the EAL is not met.

This IC addresses an event in which a HOSTILE FORCE has taken physical control of the facility to the extent that the plant staff can no longer operate equipment necessary to maintain key safety functions. It also addresses a HOSTILE ACTION leading to a loss of physical control that results in actual or IMMINENT damage to spent fuel due to 1) damage to a spent fuel pool cooling system (e.g., pumps, heat exchangers, controls, etc.) or, 2) loss of spent fuel pool integrity such that sufficient water level cannot be maintained.

Timely and accurate communications between Security Shift Supervision and the Control Room is essential for proper classification of a security-related event.

Security plans and terminology are based on the guidance provided by NEI 03-12, *Template for the Security Plan, Training and Qualification Plan, Safeguards Contingency Plan*.

Emergency plans and implementing procedures are public documents; therefore, EALs should not incorporate Security-sensitive information. This includes information that may be advantageous to a potential adversary, such as the particulars concerning a specific threat or threat location. Security-sensitive information should be contained in non-public documents such as the Susquehanna Physical Security Plan (ref.1).

Basis Reference(s):

1. SSES Physical Security Plan
2. ON-000-010 Security Event
3. NEI 99-01 HG1

Category: H – Hazards

Subcategory: 1 – Security

Initiating Condition: HOSTILE ACTION within the PROTECTED AREA

EAL:

HS1.1	**Site Area Emergency**
A HOSTILE ACTION is occurring or has occurred within the PROTECTED AREA as reported by the Security Shift Supervision	

Mode Applicability:

All

Definition(s):

HOSTILE ACTION - An act toward Susquehanna or its personnel that includes the use of violent force to destroy equipment, take hostages, and/or intimidate the licensee to achieve an end. This includes attack by air, land, or water using guns, explosives, projectiles, vehicles, or other devices used to deliver destructive force. Other acts that satisfy the overall intent may be included. Hostile action should not be construed to include acts of civil disobedience or felonious acts that are not part of a concerted attack on Susquehanna. Non-terrorism-based EALs should be used to address such activities (i.e., this may include violent acts between individuals in the owner controlled area).

PROTECTED AREA - Area within the station inner security fence (PROTECTED AREA Barrier) designated to implement the requirements of 10 CFR 73.

Basis:

Security Shift Supervision are the designated on-site personnel qualified and trained to confirm that a security event is occurring or has occurred. Training on security event classification confirmation is closely controlled due to the strict secrecy controls placed on the SSES Physical Security Plan (Safeguards) information (ref. 1).

This IC addresses the occurrence of a HOSTILE ACTION within the PROTECTED AREA. This event will require rapid response and assistance due to the possibility for damage to plant equipment.

Timely and accurate communications between Security Shift Supervision and the Control Room is essential for proper classification of a security-related event.

Security plans and terminology are based on the guidance provided by NEI 03-12, *Template for the Security Plan, Training and Qualification Plan, Safeguards Contingency Plan*.

As time and conditions allow, these events require a heightened state of readiness by the plant staff and implementation of onsite protective measures (e.g., evacuation, dispersal or sheltering). The Site Area Emergency declaration will mobilize Offsite Response Organization (ORO) resources and have them available to develop and implement public protective actions in the unlikely event that the attack is successful in impairing multiple safety functions.

This IC does apply to a HOSTILE ACTION directed at the ISFSI since it is within the PROTECTED AREA.. It does not apply to incidents that are accidental events, acts of civil disobedience, or otherwise are not a HOSTILE ACTION perpetrated by a HOSTILE FORCE. Examples include the crash of a small aircraft, shots from hunters, physical disputes between employees, etc. Reporting of these types of events is adequately addressed by other EALs, or the requirements of 10 CFR § 73.71 or 10 CFR § 50.72.

Emergency plans and implementing procedures are public documents; therefore, EALs should not incorporate Security-sensitive information. This includes information that may be advantageous to a potential adversary, such as the particulars concerning a specific threat or threat location. Security-sensitive information should be contained in non-public documents such as the Susquehanna Physical Security Plan (ref. 1).

Escalation of the emergency classification level would be via IC HG1.

Basis Reference(s):

1. SSES Physical Security Plan
2. ON-000-010 Security Event
3. NEI 99-01 HS1

Category: H – Hazards

Subcategory: 1 – Security

Initiating Condition: HOSTILE ACTION within the OWNER CONTROLLED AREA or airborne attack threat within 30 minutes

EAL:

HA1.1 Alert

A HOSTILE ACTION is occurring or has occurred within the OWNER CONTROLLED AREA as reported by the Security Shift Supervision

OR

A validated notification from NRC of an aircraft attack threat within 30 min. of the site

Mode Applicability:

All

Definition(s):

HOSTILE ACTION - An act toward Susquehanna or its personnel that includes the use of violent force to destroy equipment, take hostages, and/or intimidate the licensee to achieve an end. This includes attack by air, land, or water using guns, explosives, projectiles, vehicles, or other devices used to deliver destructive force. Other acts that satisfy the overall intent may be included. Hostile action should not be construed to include acts of civil disobedience or felonious acts that are not part of a concerted attack on Susquehanna. Non-terrorism-based EALs should be used to address such activities (i.e., this may include violent acts between individuals in the OWNER CONTROLLED AREA).

OWNER CONTROLLED AREA - Includes the area within the expanded security perimeter, i.e., the areas that are bordered by the Vehicle Barriers System. The OWNER CONTROLLED AREA also includes the Monitored OWNER CONTROLLED AREA (MOCA) as defined in Security Procedures.

Basis:

Security Shift Supervision are the designated on-site personnel qualified and trained to confirm that a security event is occurring or has occurred. Training on security event classification confirmation is closely controlled due to the strict secrecy controls placed on the SSES Physical Security Plan (Safeguards) information (ref. 1).

This IC addresses the occurrence of a HOSTILE ACTION within the OWNER CONTROLLED AREA or notification of an aircraft attack threat. This event will require rapid response and assistance due to the possibility of the attack progressing to the PROTECTED AREA, or the need to prepare the plant and staff for a potential aircraft impact.

Timely and accurate communications between the Security Shift Supervision and the Control Room is essential for proper classification of a security-related event.

Security plans and terminology are based on the guidance provided by NEI 03-12, *Template for the Security Plan, Training and Qualification Plan, Safeguards Contingency Plan.*

As time and conditions allow, these events require a heightened state of readiness by the plant staff and implementation of onsite protective measures (e.g., evacuation, dispersal or sheltering). The Alert declaration will also heighten the awareness of Offsite Response Organizations (OROs), allowing them to be better prepared should it be necessary to consider further actions.

This IC does not apply to incidents that are accidental events, acts of civil disobedience, or otherwise are not a HOSTILE ACTION perpetrated by a HOSTILE FORCE. Examples include the crash of a small aircraft, shots from hunters, physical disputes between employees, etc. Reporting of these types of events is adequately addressed by other EALs, or the requirements of 10 CFR § 73.71 or 10 CFR § 50.72.

The first threshold is applicable for any HOSTILE ACTION occurring, or that has occurred, in the OWNER CONTROLLED AREA. This includes any action directed against an ISFSI that is located outside the plant PROTECTED AREA.

The second threshold addresses the threat from the impact of an aircraft on the plant, and the anticipated arrival time is within 30 minutes. The intent of this EAL is to ensure that threat-related notifications are made in a timely manner so that plant personnel and OROs are in a heightened state of readiness. This EAL is met when the threat-related information has been validated in accordance with site-specific security procedures.

The NRC Headquarters Operations Officer (HOO) will communicate to the licensee if the threat involves an aircraft. The status and size of the plane may be provided by NORAD through the NRC.

In some cases, it may not be readily apparent if an aircraft impact within the OWNER CONTROLLED AREA was intentional (i.e., a HOSTILE ACTION). It is expected, although not certain, that notification by an appropriate Federal agency to the site would clarify this point. In this case, the appropriate federal agency is intended to be NORAD, FBI, FAA or NRC. The emergency declaration, including one based on other ICs/EALs, should not be unduly delayed while awaiting notification by a Federal agency.

Emergency plans and implementing procedures are public documents; therefore, EALs should not incorporate Security-sensitive information. This includes information that may be advantageous to a potential adversary, such as the particulars concerning a specific threat or threat location. Security-sensitive information should be contained in non-public documents such as the Susquehanna Physical Security Plan (ref. 1).

Basis Reference(s):

1. SSES Physical Security Plan
2. ON-000-010 Security Event
3. NEI 99-01 HA1

Category: H – Hazards

Subcategory: 1 – Security

Initiating Condition: Confirmed SECURITY CONDITION or threat

EAL:

HU1.1 Unusual Event

A SECURITY CONDITION that does **not** involve a HOSTILE ACTION as reported by the Security Shift Supervision

OR

Notification of a credible security threat directed at the site

OR

A validated notification from the NRC providing information of an aircraft threat

Mode Applicability:

All

Definition(s):

SECURITY CONDITION - Any security event as listed in the approved security contingency plan that constitutes a threat/compromise to site security, threat/risk to site personnel, or a potential degradation to the level of safety of the plant. A security condition does not involve a HOSTILE ACTION.

HOSTILE ACTION - An act toward Susquehanna or its personnel that includes the use of violent force to destroy equipment, take hostages, and/or intimidate the licensee to achieve an end. This includes attack by air, land, or water using guns, explosives, projectiles, vehicles, or other devices used to deliver destructive force. Other acts that satisfy the overall intent may be included. Hostile action should not be construed to include acts of civil disobedience or felonious acts that are not part of a concerted attack on Susquehanna. Non-terrorism-based EALs should be used to address such activities (i.e., this may include violent acts between individuals in the OWNER CONTROLLED AREA).

Basis:

This EAL is based on the SSES Physical Security Plan (ref. 1).

Security Shift Supervision are the designated on-site personnel qualified and trained to confirm that a security event is occurring or has occurred. Training on security event classification confirmation is closely controlled due to the strict secrecy controls placed on the SSES Physical Security Plan (Safeguards) information (ref. 1).

This IC addresses events that pose a threat to plant personnel or SAFETY SYSTEM equipment, and thus represent a potential degradation in the level of plant safety. Security events which do not meet one of these EALs are adequately addressed by the requirements of 10 CFR § 73.71 or 10 CFR § 50.72. Security events assessed as HOSTILE ACTIONS are classifiable under ICs HA1, HS1 and HG1.

Timely and accurate communications between Security Shift Supervision and the Control Room is essential for proper classification of a security-related event. Classification of these events will initiate appropriate threat-related notifications to plant personnel and Offsite Response Organizations.

Security plans and terminology are based on the guidance provided by NEI 03-12, *Template for the Security Plan, Training and Qualification Plan, Safeguards Contingency Plan.*

The first threshold references the Security Shift Supervision because these are the individuals trained to confirm that a security event is occurring or has occurred. Training on security event confirmation and classification is controlled due to the nature of Safeguards and 10 CFR § 2.39 information.

The second threshold addresses the receipt of a credible security threat. The credibility of the threat is assessed in accordance with the Susquehanna Physical Security Plan (ref. 1).

The third threshold addresses the threat from the impact of an aircraft on the plant. The NRC Headquarters Operations Officer (HOO) will communicate to the licensee if the threat involves an aircraft. The status and size of the plane may also be provided by NORAD through the NRC. Validation of the threat is performed in accordance with the Susquehanna Physical Security Plan (ref. 1).

Emergency plans and implementing procedures are public documents; therefore, EALs should not incorporate Security-sensitive information. This includes information that may be advantageous to a potential adversary, such as the particulars concerning a specific threat or threat location. Security-sensitive information should be contained in non-public documents such as the Susquehanna Physical Security Plan (ref. 1).

Escalation of the emergency classification level would be via IC HA1.

Basis Reference(s):

1. SSES Physical Security Plan
2. ON-000-010 Security Event
3. NEI 99-01 HU1

Category: H – Hazards and Other Conditions Affecting Plant Safety

Subcategory: 2 – Seismic Event

Initiating Condition: Seismic event greater than OBE levels

EAL:

HU2.1	**Unusual Event**
Seismic event greater than OPERATING BASIS EARTHQUAKE (OBE) as indicated by seismic instrumentation in the Control Room recording level greater than an OBE	

Mode Applicability:

All

Definition(s):

None

Basis:

Ground motion acceleration of 0.05g is the OPERATING BASIS EARTHQUAKE (OBE) for Susquehanna (ref. 1). Earthquake Monitoring Panel 0C696 provides indication of strong motion, OBE, or SAFE SHUTDOWN EARTHQUAKE (SSE) events for the Unit 1 Containment Foundation, Unit 2 Containment Foundation, and the ESW Pumphouse (as well as tape printout). Input from all six channels are recorded when a trigger initiates the system. A seismic event generally starts with an indication in the Control Room, Annunciator SEISMIC MON SYSTEM TRIGGERED (AR-016-001 window G06) on 0C653. The OBE is signaled by an LED illuminated green on the upper panel adjacent to the label, OPERATING BASIS EARTHQUAKE (ref. 2-4).

If above seismic monitoring is inoperable, ensure on-shift Operations and Security crews are aware of the need to report vibratory ground motion (earthquakes) to the control room, and the need for control room staff to contact outside agencies to confirm level of earthquake per OP-099-002 and ON-000-002.

To avoid inappropriate emergency classification resulting from spurious actuation of the seismic instrumentation or felt motion not attributable to seismic activity, an offsite agency (USGS, National Earthquake Information Center) can confirm that an earthquake has occurred in the area of the plant. Such confirmation should not, however, preclude a timely emergency declaration. The NEIC can be contacted by calling **(303) 273-8500**. Select **option #1** and inform the analyst you wish to confirm recent seismic activity in the vicinity of Susquehanna. Provide the analyst with the following Susquehanna coordinates: **41°5′20″ north latitude, 76°8′56″ west longitude** (ref. 4). Alternatively, near real-time seismic activity can be accessed via the NEIC website: *http://earthquake.usgs.gov/eqcenter/*

This IC addresses a seismic event that results in accelerations at the plant site greater than those specified for an Operating Basis Earthquake (OBE). An earthquake greater than an OBE but less than a Safe Shutdown Earthquake (SSE) should have no significant impact on safety-related systems, structures and components; however, some time may be required for the plant staff to ascertain the actual post-event condition of the plant (e.g., performs walk-downs and

post-event inspections). Given the time necessary to perform walk-downs and inspections, and fully understand any impacts, this event represents a potential degradation of the level of safety of the plant.

Event verification with external sources should not be necessary during or following an OBE. Earthquakes of this magnitude should be readily felt by on-site personnel and recognized as a seismic event (e.g., lateral accelerations in excess of 0.05g). The Shift Manager or Emergency Director/Recovery Manager may seek external verification if deemed appropriate (e.g., a call to the USGS, check internet news sources, etc.); however, the verification action must not preclude a timely emergency declaration.

Depending upon the plant mode at the time of the event, escalation of the emergency classification level would be via IC CA6 or SA8.

Basis Reference(s):

1. TRM 3.3.2 Seismic Monitoring Instrumentation
2. FSAR Section 3.7a Seismic Design
3. ON-000-002 Natural Phenomena
4. OP-099-002 Seismic Monitoring System
5. NEI 99-01 HU2

Category: H – Hazards and Other Conditions Affecting Plant Safety

Subcategory: 3 – Natural or Technology Hazard

Initiating Condition: Hazardous event

EAL:

HU3.1	**Unusual Event**
A tornado strike within the PROTECTED AREA	

Mode Applicability:

All

Definition(s):

PROTECTED AREA - Area within the station inner security fence (PROTECTED AREA Barrier) designated to implement the requirements of 10 CFR 73.

Basis:

If damage is confirmed visually or by other in-plant indications, the event may be escalated to an Alert under EAL CA6.1 or SA8.1.

A tornado striking (touching down) within the Protected Area warrants declaration of an Unusual Event regardless of the measured wind speed at the meteorological tower. A tornado is defined as a violently rotating column of air in contact with the ground and extending from the base of a thunderstorm.

This IC addresses hazardous events that are considered to represent a potential degradation of the level of safety of the plant.

EAL HU3.1 addresses a tornado striking (touching down) within the PROTECTED AREA.

Escalation of the emergency classification level would be based on ICs in Recognition Categories R, F, S or C.

Basis Reference(s):

1. NEI 99-01 HU3

Category: H – Hazards and Other Conditions Affecting Plant Safety

Subcategory: 3 – Natural or Technology Hazard

Initiating Condition: Hazardous event

EAL:

HU3.2 Unusual Event

Internal room or area FLOODING of a magnitude sufficient to require manual or automatic electrical isolation of a SAFETY SYSTEM component needed for the current operating mode

Mode Applicability:

All

Definition(s):

FLOODING - A condition where water is entering a room or area faster than installed equipment is capable of removal, resulting in a rise of water level within the room or area.

SAFETY SYSTEM - A system required for safe plant operation, cooling down the plant and/or placing it in the cold shutdown condition, including the ECCS. These are typically systems classified as safety-related (as defined in 10CFR50.2):

Those structures, systems and components that are relied upon to remain functional during and following design basis events to assure:

(1) The integrity of the reactor coolant pressure boundary;

(2) The capability to shut down the reactor and *maintain* it in a safe shutdown condition;

(3) The capability to prevent or mitigate the consequences of accidents which could result in potential offsite exposures.

Basis:

If the SAFETY SYSTEM component was operating at the time of isolation, EAL SA8.1 or CA6.1 may be applicable based on degraded SAFETY SYSTEM performance.

This EAL addresses water entering a room or area faster than installed equipment is capable of removing but is not applicable to water spraying on equipment of a magnitude that does not meet the definition of FLOODING.

This IC addresses hazardous events that are considered to represent a potential degradation of the level of safety of the plant.

This EAL addresses FLOODING of a building room or area that results in operators isolating power to a SAFETY SYSTEM component due to water level or other wetting concerns caused by the FLOODING. Classification is also required if the water level or related wetting caused by the FLOODING causes an automatic isolation of a SAFETY SYSTEM component from its power source (e.g., a breaker or relay trip). To warrant classification, operability of the affected component must be required by Technical Specifications for the current operating mode.

Escalation of the emergency classification level would be based on ICs in Recognition Categories R, F, S or C.

Basis Reference(s):

1. NPE 91 001 SSES IPE
2. NEI 99-01 HU3

Category: H – Hazards and Other Conditions Affecting Plant Safety

Subcategory: 3 – Natural or Technology Hazard

Initiating Condition: Hazardous event

EAL:

HU3.3	**Unusual Event**
Movement of personnel within the PROTECTED AREA is IMPEDED due to an offsite event involving hazardous materials (e.g., an offsite chemical spill or toxic gas release)	

Mode Applicability:

All

Definition(s):

IMPEDE(D) - Personnel access to a room or area is hindered to an extent that extraordinary measures are necessary to facilitate entry of personnel into the affected room/area (e.g., requiring use of protective measures such as temporary shielding, SCBAs or beyond Emergency Plan RWP dose extensions that are not routinely employed to access the room/area).

PROTECTED AREA - Area within the station inner security fence (PROTECTED AREA Barrier) designated to implement the requirements of 10 CFR 73.

Basis:

As used here, the term "offsite" is meant to be areas external to the PROTECTED AREA.

This IC addresses hazardous events that are considered to represent a potential degradation of the level of safety of the plant.

This EAL addresses a hazardous materials event originating at an offsite location and of sufficient magnitude to impede the movement of personnel within the PROTECTED AREA.

Escalation of the emergency classification level would be based on ICs in Recognition Categories R, F, S or C.

Basis Reference(s):

1. NEI 99-01 HU3

Category: H – Hazards and Other Conditions Affecting Plant Safety

Subcategory: 3 – Natural or Technology Hazard

Initiating Condition: Hazardous event

EAL:

HU3.4	**Unusual Event**
A hazardous event that results in on-site conditions sufficient to prohibit the plant staff from accessing the site via personal vehicles (Note 7)	

Note 7: This EAL does **not** apply to routine traffic impediments such as fog, snow, ice, or vehicle breakdowns or accidents.

Mode Applicability:

All

Definition(s):

None

Basis:

Events to consider are river flooding, hurricane, wind storms that block all of the multiple routes to get to the site.

This IC addresses hazardous events that are considered to represent a potential degradation of the level of safety of the plant.

This EAL addresses a hazardous event that causes an on-site impediment to vehicle movement and significant enough to prohibit the plant staff from accessing the site using personal vehicles. Examples of such an event include site FLOODING caused by a hurricane, heavy rains, up-river water releases, dam failure, etc., or an on-site train derailment blocking the access road.

This EAL is not intended apply to routine impediments such as fog, snow, ice, or vehicle breakdowns or accidents, but rather to more significant conditions such as the Hurricane Andrew strike on Turkey Point in 1992, the flooding around the Cooper Station during the Midwest floods of 1993, or the flooding around Ft. Calhoun Station in 2011.

Escalation of the emergency classification level would be based on ICs in Recognition Categories R, F, S or C.

Basis Reference(s):

1. NEI 99-01 HU3

Category: H – Hazards and Other Conditions Affecting Plant Safety

Subcategory: 4 – Fire

Initiating Condition: FIRE potentially degrading the level of safety of the plant

EAL:

HU4.1 Unusual Event

A FIRE is not extinguished within 15 min. of **any** of the following FIRE detection indications (Note 1):

- Report from the field (i.e., visual observation)
- Receipt of multiple (more than 1) fire alarms or indications
- Field verification of a single fire alarm

AND

The FIRE is located within **any** Table H-1 area

Note 1: The ED/RM should declare the event promptly upon determining that time limit has been exceeded, or will likely be exceeded.

Table H-1 Fire Areas
• Control Structure • Diesel Generator Buildings • ESSW Pump House • Reactor Buildings • Turbine Buildings

Mode Applicability:

All

Definition(s):

FIRE - Combustion characterized by heat and light. Sources of smoke such as slipping drive belts or overheated electrical equipment do not constitute fires. Observation of flame is preferred but is NOT required if large quantities of smoke and heat are observed.

Basis:

The 15 minute requirement begins with a credible notification that a fire is occurring, or receipt of multiple valid fire detection system alarms or field validation of a single fire alarm. A single alarm is to be validated using available Control Room indications or alarms to prove that it is not spurious, or by reports from the field. If a fire is verified to be occurring by field report, the 15 minute time limit is from the original receipt of multiple fire detection alarms/indications or field confirmation of the single fire detection alarm.

A valid fire detection alarm and a valid fire suppression alarm in the same area are considered receipt of multiple fire alarms or indications. Independent fire detection or suppression alarms in Table H-1 areas that are in close proximity are treated as multiple indications of a fire.

Table H-1 Fire Areas are based on the SSES Fire Protection Review Report (FPRR). Table H-1 Fire Areas include those structures containing functions and systems required for safe shutdown of the plant (SAFETY SYSTEMS). (ref. 1)

This IC addresses the magnitude and extent of FIRES that may be indicative of a potential degradation of the level of safety of the plant.

For EAL HU4.1 the intent of the 15-minute duration is to size the FIRE and to discriminate against small FIRES that are readily extinguished (e.g., smoldering waste paper basket). In addition to alarms, other indications of a FIRE could be a drop in fire main pressure, automatic activation of a suppression system, etc.

Upon receipt, operators will take prompt actions to confirm the validity of an initial fire alarm, indication, or report. For EAL assessment purposes, the knowledge that a fires exists starts at the time of a report from the field, receipt of multiple fire detection alarms or indications, or field confirmation of a single alarm or indication. The fire duration clock starts at the time that knowledge of a fire exists.

Depending upon the plant mode at the time of the event, escalation of the emergency classification level would be via IC CA6 or SA8.

Basis Reference(s):

1. SSES FPRR Section 6.2 Fire Area Description
2. NEI 99-01 HU4

Category: H – Hazards and Other Conditions Affecting Plant Safety

Subcategory: 4 – Fire

Initiating Condition: FIRE potentially degrading the level of safety of the plant

EAL:

HU4.2 Unusual Event

Receipt of a single fire alarm (i.e., no other indications of a FIRE)

AND

The fire alarm is indicating a FIRE within **any** Table H-1 area

AND

The existence of a FIRE is not verified (i.e., proved or disproved) within 30 min. of alarm receipt (Note 1)

Note 1: The ED/RM should declare the event promptly upon determining that time limit has been exceeded, or will likely be exceeded.

Table H-1 Fire Areas
• Control Structure • Diesel Generator Buildings • ESSW Pump House • Reactor Buildings • Turbine Buildings

Mode Applicability:

All

Definition(s):

FIRE - Combustion characterized by heat and light. Sources of smoke such as slipping drive belts or overheated electrical equipment do not constitute fires. Observation of flame is preferred but is NOT required if large quantities of smoke and heat are observed.

Basis:

The 30 minute requirement begins upon receipt of a single valid fire detection or fire suppression system alarm. The alarm is to be validated using available Control Room indications or alarms to prove that it is not spurious, or by reports from the field. Actual field reports must be made within the 30 minute time limit or a classification must be made. If a fire is verified to be occurring by field report within 30 minutes, classification shall be made based on EAL HU4.1.

Table H-1 Fire Areas are based on the SSES Fire Protection Review Report (FPRR). Table H-1 Fire Areas include those structures containing functions and systems required for safe shutdown of the plant (SAFETY SYSTEMS). (ref. 1)

This IC addresses the magnitude and extent of FIRES that may be indicative of a potential degradation of the level of safety of the plant.

This EAL addresses receipt of a single fire alarm, and the existence of a FIRE is not verified (i.e., proved or disproved) within 30-minutes of the alarm. Upon receipt, operators will take prompt actions to confirm the validity of a single fire alarm. For EAL assessment purposes, the 30-minute clock starts at the time that the initial alarm was received, and not the time that a subsequent verification action was performed.

A single fire alarm, absent other indication(s) of a FIRE, may be indicative of equipment failure or a spurious activation, and not an actual FIRE. For this reason, additional time is allowed to verify the validity of the alarm. The 30-minute period is a reasonable amount of time to determine if an actual FIRE exists; however, after that time, and absent information to the contrary, it is assumed that an actual FIRE is in progress.

If an actual FIRE is verified by a report from the field, then HU4.1 is immediately applicable, and the emergency must be declared if the FIRE is not extinguished within 15-minutes of the report. If the alarm is verified to be due to an equipment failure or a spurious activation, and this verification occurs within 30-minutes of the receipt of the alarm, then this EAL is not applicable and no emergency declaration is warranted.

Basis-Related Requirements from Appendix R

Appendix R to 10 CFR 50, states in part:

> Criterion 3 of Appendix A to this part specifies that "Structures, systems, and components important to safety shall be designed and located to minimize, consistent with other safety requirements, the probability and effect of fires and explosions."
>
> When considering the effects of fire, those systems associated with achieving and maintaining safe shutdown conditions assume major importance to safety because damage to them can lead to core damage resulting from loss of coolant through boil-off.
>
> Because fire may affect safe shutdown systems and because the loss of function of systems used to mitigate the consequences of design basis accidents under post-fire conditions does not per se impact public safety, the need to limit fire damage to systems required to achieve and maintain safe shutdown conditions is greater than the need to limit fire damage to those systems required to mitigate the consequences of design basis accidents.

In addition, Appendix R to 10 CFR 50, requires, among other considerations, the use of 1-hour fire barriers for the enclosure of cable and equipment and associated non-safety circuits of one redundant train (G.2.c). As used in HU4.2, the 30-minutes to verify a single alarm is well within this worst-case 1-hour time period.

Depending upon the plant mode at the time of the event, escalation of the emergency classification level would be via IC CA6 or SA8.

Basis Reference(s):

1. SSES FPRR Section 6.2 Fire Area Description
2. NEI 99-01 HU4

Category: H – Hazards and Other Conditions Affecting Plant Safety

Subcategory: 4 – Fire

Initiating Condition: FIRE potentially degrading the level of safety of the plant

EAL:

HU4.3	**Unusual Event**
A FIRE within the plant PROTECTED AREA **not** extinguished within 60 min. of the initial report, alarm or indication (Note 1)	

Note 1: The ED/RM should declare the event promptly upon determining that time limit has been exceeded, or will likely be exceeded.

Mode Applicability:

All

Definition(s):

FIRE - Combustion characterized by heat and light. Sources of smoke such as slipping drive belts or overheated electrical equipment do not constitute fires. Observation of flame is preferred but is NOT required if large quantities of smoke and heat are observed.

PROTECTED AREA - Area within the station inner security fence (PROTECTED AREA Barrier) designated to implement the requirements of 10 CFR 73.

Basis:

This IC addresses the magnitude and extent of FIRES that may be indicative of a potential degradation of the level of safety of the plant.

In addition to a FIRE addressed by EAL HU4.1 or HU4.2, a FIRE within the plant PROTECTED AREA not extinguished within 60-minutes may also potentially degrade the level of plant safety. Depending upon the plant mode at the time of the event, escalation of the emergency classification level would be via IC CA6 or SA8.

The ISFSI is located within the PROTECTED AREA.

Basis Reference(s):

1. NEI 99-01 HU4

Category: H – Hazards and Other Conditions Affecting Plant Safety

Subcategory: 4 – Fire

Initiating Condition: FIRE potentially degrading the level of safety of the plant

EAL:

HU4.4 Unusual Event

A FIRE within the plant PROTECTED AREA that requires firefighting support by an offsite fire response agency to extinguish

Mode Applicability:

All

Definition(s):

FIRE - Combustion characterized by heat and light. Sources of smoke such as slipping drive belts or overheated electrical equipment do not constitute fires. Observation of flame is preferred but is NOT required if large quantities of smoke and heat are observed.

PROTECTED AREA - Area within the station inner security fence (PROTECTED AREA Barrier) designated to implement the requirements of 10 CFR 73.

Basis:

This IC addresses the magnitude and extent of FIRES that may be indicative of a potential degradation of the level of safety of the plant.

If a FIRE within the plant PROTECTED AREA is of sufficient size to require a response by an offsite firefighting agency (e.g., a local town Fire Department), then the level of plant safety is potentially degraded. The dispatch of an offsite firefighting agency to the site requires an emergency declaration only if it is needed to actively support firefighting efforts because the fire is beyond the capability of the Fire Brigade to extinguish. Declaration is not necessary if the agency resources are placed on stand-by, or supporting post-extinguishment recovery or investigation actions.

Depending upon the plant mode at the time of the event, escalation of the emergency classification level would be via IC CA6 or SA8.

The ISFSI is located within the PROTECTED AREA.

Basis Reference(s):

1. NEI 99-01 HU4

Category: H – Hazards and Other Conditions Affecting Plant Safety

Subcategory: 5 – Hazardous Gases

Initiating Condition: Gaseous release IMPEDING access to equipment necessary for normal plant operations, cooldown or shutdown

EAL:

HA5.1 Alert

Release of a toxic, corrosive, asphyxiant or flammable gas into **any** Table H-2 rooms or areas

AND

Entry into the room or area is prohibited or IMPEDED (Note 5)

Note 5: If the equipment in the listed room or area was already inoperable or out-of-service before the event occurred, then no emergency classification is warranted.

Table H-2 Safe Operation & Shutdown Areas

Elevation	Unit 1 Area(s) **	Unit 2 Area(s)**	Mode(s)
670'	RB 27	RB 32	3,4,5
683'	RB 27, 28, 29	RB 32, 33, 34	3,4,5
703'	RB 28, 29	RB 33, 34	3,4,5
719'	RB 25, 29	RB 30, 34	3,4,5
749'	RB 25, 29	RB 32, 33	3,4,5
729'	CS 12, 21	CS 12, 21	1, 2, 3, 4, 5, D

** **See Chart 1 for location of plant areas**

Chart 1- Plant Area Key Plan

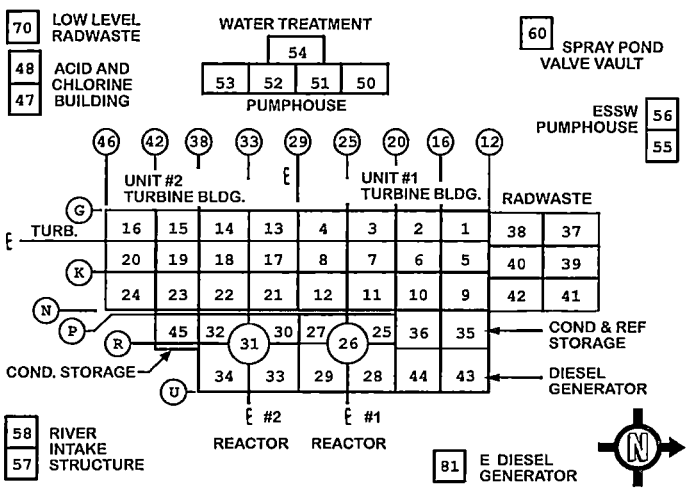

Mode Applicability:

All

Definition(s):

IMPEDE(D) - Personnel access to a room or area is hindered to an extent that extraordinary measures are necessary to facilitate entry of personnel into the affected room/area (e.g., requiring use of protective measures such as temporary shielding, SCBAs or beyond Emergency Plan RWP dose extensions that are not routinely employed to access the room/area).

Basis:

If the equipment in the listed room or area was already inoperable, or out-of-service, before the event occurred, then no emergency should be declared since the event will have no adverse impact beyond that already allowed by Technical Specifications at the time of the event.

The list of plant areas in Table H-2 specify those areas that contain equipment which require a manual/local action as specified in operating procedures used for normal plant operation, cooldown and shutdown. Areas in which actions of a contingent or emergency nature would be performed (e.g., an action to address an off-normal or emergency condition such as emergency repairs, corrective measures or emergency operations) are not included. In addition, the list specifies the plant mode(s) during which entry would be required for each room or area. See Chart 1 for the specific locations of areas listed in Table R-2. See Attachment 3 for more details of how the Table R-2 was developed (ref. 1).

This IC addresses an event involving a release of a hazardous gas that precludes or impedes access to equipment necessary to maintain normal plant operation, or required for a normal plant cooldown and shutdown. This condition represents an actual or potential substantial degradation of the level of safety of the plant.

An Alert declaration is warranted if entry into the affected room/area is, or may be, procedurally required during the plant operating mode in effect at the time of the gaseous release. The emergency classification is not contingent upon whether entry is actually necessary at the time of the release.

Evaluation of the IC and EAL do not require atmospheric sampling; it only requires the Emergency Director's/Recover Manager's judgment that the gas concentration in the affected room/area is sufficient to preclude or significantly impede procedurally required access. This judgment may be based on a variety of factors including an existing job hazard analysis, report of ill effects on personnel, advice from a subject matter expert or operating experience with the same or similar hazards. Access should be considered as impeded if extraordinary measures are necessary to facilitate entry of personnel into the affected room/area (e.g., requiring use of protective equipment, such as SCBAs, that is not routinely employed).

An emergency declaration is not warranted if any of the following conditions apply:

- The plant is in an operating mode different than the mode specified for the affected room/area (i.e., entry is not required during the operating mode in effect at the time of the gaseous release). For example, the plant is in Mode 1 when the gaseous release occurs,

and the procedures used for normal operation, cooldown and shutdown do not require entry into the affected room until Mode 4.

- The gas release is a planned activity that includes compensatory measures which address the temporary inaccessibility of a room or area (e.g., fire suppression system testing).
- The action for which room/area entry is required is of an administrative or record keeping nature (e.g., normal rounds or routine inspections).
- The access control measures are of a conservative or precautionary nature, and would not actually prevent or impede a required action.
- If the equipment in the listed room or area was already inoperable, or out-of-service, before the event occurred, then no emergency should be declared since the event will have no adverse impact beyond that already allowed by Technical Specifications at the time of the event.

An asphyxiant is a gas capable of reducing the level of oxygen in the body to dangerous levels. Most commonly, asphyxiants work by merely displacing air in an enclosed environment. This reduces the concentration of oxygen below the IDLH level of around 19.5%, which can lead to breathing difficulties, unconsciousness or even death.

This EAL does not apply to firefighting activities that automatically or manually activate a fire suppression system in an area, or to intentional inerting of containment.

Escalation of the emergency classification level would be via Recognition Category R, C or F ICs.

Basis Reference(s):

1. Attachment 3 Safe Operation & Shutdown Areas Tables R-2 & H-2 Bases
2. NEI 99-01 HA5

Category: H – Hazards and Other Conditions Affecting Plant Safety

Subcategory: 6 – Control Room Evacuation

Initiating Condition: Inability to control a key safety function from outside the Control Room

EAL:

HS6.1 Site Area Emergency

An event has resulted in plant control being transferred from the Control Room to the Remote Shutdown Panels

AND

Control of **any** of the following key safety functions is not reestablished within 15 min. (Note 1):

- Reactivity
- RPV water level
- RCS heat removal

Note 1: The ED/RM should declare the event promptly upon determining that time limit has been exceeded, or will likely be exceeded.

Mode Applicability:

All

Definition(s):

None

Basis:

The Shift Manager determines if the Control Room is uninhabitable and requires evacuation. Control Room inhabitability may be caused by fire, dense smoke, noxious fumes, bomb threat in or adjacent to the Control Room, or other life threatening conditions (Ref. 1, 2).

This IC addresses an evacuation of the Control Room that results in transfer of plant control to alternate locations, and the control of a key safety function cannot be reestablished in a timely manner. The failure to gain control of a key safety function following a transfer of plant control to alternate locations is a precursor to a challenge to one or more fission product barriers within a relatively short period of time.

The determination of whether or not "control" is established at the remote safe shutdown location(s) is based on Emergency Director/Recovery Manager judgment. The Emergency Director/Recovery Manager is expected to make a reasonable, informed judgment within 15 minutes whether or not the operating staff has control of key safety functions from the remote safe shutdown location(s).

Escalation of the emergency classification level would be via IC FG1 or CG1

Basis Reference(s):

1. ON-100(200)-009 Control Room Evacuation
2. NEI 99-01 HS6

Category: H – Hazards and Other Conditions Affecting Plant Safety

Subcategory: 6 – Control Room Evacuation

Initiating Condition: Control Room evacuation resulting in transfer of plant control to alternate locations

EAL:

HA6.1 Alert

An event has resulted in plant control being transferred from the Control Room to the Remote Shutdown Panels

Mode Applicability:

All

Definition(s):

None

Basis:

The Shift Manager (SM) determines if the Control Room is uninhabitable and requires evacuation. Control Room inhabitability may be caused by fire, dense smoke, noxious fumes, bomb threat in or adjacent to the Control Room, or other life threatening conditions (Ref. 1, 2).

Inability to establish plant control from outside the Control Room escalates this event to a Site Area Emergency per EAL HS6.1.

This IC addresses an evacuation of the Control Room that results in transfer of plant control to alternate locations outside the Control Room. The loss of the ability to control the plant from the Control Room is considered to be a potential substantial degradation in the level of plant safety.

Following a Control Room evacuation, control of the plant will be transferred to alternate shutdown locations. The necessity to control a plant shutdown from outside the Control Room, in addition to responding to the event that required the evacuation of the Control Room, will present challenges to plant operators and other on-shift personnel. Activation of the ERO and emergency response facilities will assist in responding to these challenges.

Escalation of the emergency classification level would be via IC HS6.

Basis Reference(s):

1. ON-100(200)-009 Control Room Evacuation
2. NEI 99-01 HA6

Category: H – Hazards and Other Conditions Affecting Plant Safety

Subcategory: 7 – ED/RM Judgment

Initiating Condition: Other conditions exist which in the judgment of the Emergency Director/Recovery Manager warrant declaration of a General Emergency

EAL:

HG7.1 General Emergency

Other conditions exist which in the judgment of the Emergency Director/Recovery Manager indicate that events are in progress or have occurred which involve actual or IMMINENT substantial core degradation or melting with potential for loss of containment integrity or HOSTILE ACTION that results in an actual loss of physical control of the facility. Releases can be reasonably expected to exceed EPA Protective Action Guideline exposure levels offsite for more than the immediate site area

Mode Applicability:

All

Definition(s):

HOSTILE ACTION - An act toward Susquehanna or its personnel that includes the use of violent force to destroy equipment, take hostages, and/or intimidate the licensee to achieve an end. This includes attack by air, land, or water using guns, explosives, projectiles, vehicles, or other devices used to deliver destructive force. Other acts that satisfy the overall intent may be included. Hostile action should not be construed to include acts of civil disobedience or felonious acts that are not part of a concerted attack on Susquehanna. Non-terrorism-based EALs should be used to address such activities (i.e., this may include violent acts between individuals in the OWNER CONTROLLED AREA).

IMMINENT - The trajectory of events or conditions is such that an EAL will be met within a relatively short period of time regardless of mitigation or corrective actions.

As applied to Susquehanna, CONTAINMENT CLOSURE is established per NDAP-QA-0309 (ref. 2) for Primary Containment OR is established per NDAP-QA-0321 (ref. 3) for Secondary Containment.

Basis:

The Emergency Director/Recovery Manager is the designated onsite individual having the responsibility and authority for implementing the Emergency Response Plan. The Shift Manager(SM) initially acts in the capacity of the Emergency Director/Recovery Manager and takes actions as outlined in the Emergency Plan implementing procedures. If required by the emergency classification or if deemed appropriate by the Emergency Director/Recovery Manager, emergency response personnel are notified and instructed to report to their emergency response locations. In this manner, the individual usually in charge of activities in the Control Room is responsible for initiating the necessary emergency response, but Plant Management is expected to manage the emergency response as soon as available to do so in

anticipation of the possible wide-ranging responsibilities associated with managing a major emergency (ref. 1).

This IC addresses unanticipated conditions not addressed explicitly elsewhere but that warrant declaration of an emergency because conditions exist which are believed by the Emergency Director/Recovery Manager to fall under the emergency classification level description for a General Emergency.

Basis Reference(s):

1. Susquehanna LLC, Susquehanna Steam Electric Station Emergency Plan, Section 6.0 Organizational Control of Emergencies
2. NDAP-QA-0309 Primary Containment Access and Control
3. NDAP-QA-0321 Secondary Containment Integrity Control
4. NEI 99-01 HG7

Category: H – Hazards and Other Conditions Affecting Plant Safety

Subcategory: 7 – ED/RM Judgment

Initiating Condition: Other conditions existing that in the judgment of the Emergency Director/Recovery Manager warrant declaration of a Site Area Emergency

EAL:

HS7.1 Site Area Emergency

Other conditions exist which in the judgment of the Emergency Director/Recovery Manager indicate that events are in progress or have occurred which involve actual or likely major failures of plant functions needed for protection of the public or HOSTILE ACTION that results in intentional damage or malicious acts, (1) toward site personnel or equipment that could lead to the likely failure of or, (2) that prevent effective access to equipment needed for the protection of the public. Any releases are not expected to result in exposure levels which exceed EPA Protective Action Guideline exposure levels beyond the EMERGENCY PLAN BOUNDARY

Mode Applicability:

All

Definition(s):

HOSTILE ACTION - An act toward Susquehanna or its personnel that includes the use of violent force to destroy equipment, take hostages, and/or intimidate the licensee to achieve an end. This includes attack by air, land, or water using guns, explosives, projectiles, vehicles, or other devices used to deliver destructive force. Other acts that satisfy the overall intent may be included. Hostile action should not be construed to include acts of civil disobedience or felonious acts that are not part of a concerted attack on Susquehanna. Non-terrorism-based EALs should be used to address such activities (i.e., this may include violent acts between individuals in the OWNER CONTROLLED AREA).

EMERGENCY PLAN BOUNDARY (EPB) - Same as the Exclusion Area Boundary, i.e., that area around SSES within a radius of 1800 feet determined in accordance with 10 CFR 100.11.

Basis:

The Emergency Director/Recovery Manager is the designated onsite individual having the responsibility and authority for implementing the Emergency Response Plan. The Shift Manager (SM) initially acts in the capacity of the Emergency Director/Recovery Manager and takes actions as outlined in the Emergency Plan implementing procedures. If required by the emergency classification or if deemed appropriate by the Emergency Director/Recovery Manager, emergency response personnel are notified and instructed to report to their emergency response locations. In this manner, the individual usually in charge of activities in the Control Room is responsible for initiating the necessary emergency response, but Plant Management is expected to manage the emergency response as soon as available to do so in anticipation of the possible wide-ranging responsibilities associated with managing a major emergency (ref. 1).

This IC addresses unanticipated conditions not addressed explicitly elsewhere but that warrant declaration of an emergency because conditions exist which are believed by the Emergency Director/Recovery Manager to fall under the emergency classification level description for a Site Area Emergency.

Basis Reference(s):

1. Susquehanna LLC, Susquehanna Steam Electric Station Emergency Plan, Section 6.0 Organizational Control of Emergencies
2. NEI 99-01 HS7

Category: H – Hazards and Other Conditions Affecting Plant Safety

Subcategory: 7 – ED/RM Judgment

Initiating Condition: Other conditions exist that in the judgment of the Emergency Director/Recovery Manager warrant declaration of an Alert

EAL:

HA7.1 Alert

Other conditions exist which, in the judgment of the Emergency Director/Recovery Manager, indicate that events are in progress or have occurred which involve an actual or potential substantial degradation of the level of safety of the plant or a security event that involves probable life threatening risk to site personnel or damage to site equipment because of HOSTILE ACTION. Any releases are expected to be limited to small fractions of the EPA Protective Action Guideline exposure levels.

Mode Applicability:

All

Definition(s):

HOSTILE ACTION - An act toward Susquehanna or its personnel that includes the use of violent force to destroy equipment, take hostages, and/or intimidate the licensee to achieve an end. This includes attack by air, land, or water using guns, explosives, projectiles, vehicles, or other devices used to deliver destructive force. Other acts that satisfy the overall intent may be included. Hostile action should not be construed to include acts of civil disobedience or felonious acts that are not part of a concerted attack on Susquehanna. Non-terrorism-based EALs should be used to address such activities (i.e., this may include violent acts between individuals in the OWNER CONTROLLED AREA).

Basis:

The Emergency Director/Recovery Manager is the designated onsite individual having the responsibility and authority for implementing the Emergency Response Plan. The Shift Manager (SM) initially acts in the capacity of the Emergency Director/Recovery Manager and takes actions as outlined in the Emergency Plan implementing procedures. If required by the emergency classification or if deemed appropriate by the Emergency Director/Recovery Manager, emergency response personnel are notified and instructed to report to their emergency response locations. In this manner, the individual usually in charge of activities in the Control Room is responsible for initiating the necessary emergency response, but Plant Management is expected to manage the emergency response as soon as available to do so in anticipation of the possible wide-ranging responsibilities associated with managing a major emergency (ref.1).

This IC addresses unanticipated conditions not addressed explicitly elsewhere but that warrant declaration of an emergency because conditions exist which are believed by the Emergency Director/Recovery Manager to fall under the emergency classification level description for an Alert.

Basis Reference(s):

1. Susquehanna LLC, Susquehanna Steam Electric Station Emergency Plan, Section 6.0 Organizational Control of Emergencies
2. NEI 99-01 HA7

Category: H – Hazards and Other Conditions Affecting Plant Safety

Subcategory: 7 – ED/RM Judgment

Initiating Condition: Other conditions existing that in the judgment of the Emergency Director/Recovery Manager warrant declaration of a UE

EAL:

HU7.1	**Unusual Event**
Other conditions exist which in the judgment of the Emergency Director/Recovery Manager indicate that events are in progress or have occurred which indicate a potential degradation of the level of safety of the plant or indicate a security threat to facility protection has been initiated. No releases of radioactive material requiring offsite response or monitoring are expected unless further degradation of SAFETY SYSTEMS occurs.	

Mode Applicability:

All

Definition(s):

SAFETY SYSTEM - A system required for safe plant operation, cooling down the plant and/or placing it in the cold shutdown condition, including the ECCS. These are typically systems classified as safety-related (as defined in 10CFR50.2):

Those structures, systems and components that are relied upon to remain functional during and following design basis events to assure:

(1) The integrity of the reactor coolant pressure boundary;

(2) The capability to shut down the reactor and maintain it in a safe shutdown condition;

(3) The capability to prevent or mitigate the consequences of accidents which could result in potential offsite exposures.

Basis:

The Emergency Director/Recovery Manager is the designated onsite individual having the responsibility and authority for implementing the Emergency Response Plan. The Shift Manager (SM) initially acts in the capacity of the Emergency Director/Recovery Manager and takes actions as outlined in the Emergency Plan implementing procedures. If required by the emergency classification or if deemed appropriate by the Emergency Director/Recovery Manager, emergency response personnel are notified and instructed to report to their emergency response locations. In this manner, the individual usually in charge of activities in the Control Room is responsible for initiating the necessary emergency response, but Plant Management is expected to manage the emergency response as soon as available to do so in anticipation of the possible wide-ranging responsibilities associated with managing a major emergency (ref. 1).

This IC addresses unanticipated conditions not addressed explicitly elsewhere but that warrant declaration of an emergency because conditions exist which are believed by the Emergency Director/Recovery Manager to fall under the emergency classification level description for an Unusual Event.

Basis Reference(s):

1. Susquehanna LLC, Susquehanna Steam Electric Station Emergency Plan, Section 6.0 Organizational Control of Emergencies
2. NEI 99-01 HU7

Category S – System Malfunction

EAL Group: Hot Conditions (RCS temperature > 200°F); EALs in this category are applicable only in one or more hot operating modes.

Numerous system-related equipment failure events that warrant emergency classification have been identified in this category. They may pose actual or potential threats to plant safety.

The events of this category pertain to the following subcategories:

1. Loss of Emergency AC Power

Loss of emergency electrical power can compromise plant safety system operability including decay heat removal and emergency core cooling systems which may be necessary to ensure fission product barrier integrity. This category includes loss of onsite and offsite sources for 4.16 kV ESS buses.

2. Loss of Vital DC Power

Loss of emergency electrical power can compromise plant safety system operability including decay heat removal and emergency core cooling systems which may be necessary to ensure fission product barrier integrity. This category includes loss of power to or degraded voltage on the 125 VDC vital buses.

3. Loss of Control Room Indications

Certain events that degrade plant operator ability to effectively assess plant conditions within the plant warrant emergency classification. Losses of indicators are in this subcategory.

4. RCS Activity

During normal operation, reactor coolant fission product activity is very low. Small concentrations of fission products in the coolant are primarily from the fission of tramp uranium in the fuel clad or minor perforations in the clad itself. Any significant increase from these base-line levels (2% - 5% clad failures) is indicative of fuel failures and is covered under the Fission Product Barrier Degradation category. However, lesser amounts of clad damage may result in coolant activity exceeding Technical Specification limits. These fission products will be circulated with the reactor coolant and can be detected by coolant sampling.

5. RCS Leakage

The reactor pressure vessel provides a volume for the coolant that covers the reactor core. The reactor pressure vessel and associated pressure piping (reactor coolant system) together provide a barrier to limit the release of radioactive material should the reactor fuel clad integrity fail. Excessive RCS leakage greater than Technical Specification limits indicates potential pipe cracks that may propagate to an extent threatening fuel clad, RCS and Primary Containment integrity.

6. RPS Failure

This subcategory includes events related to failure of the Reactor Protection System (RPS) to initiate and complete reactor scrams. In the plant licensing basis, postulated failures of the RPS to complete a reactor scram comprise a specific set of analyzed events referred to

as Anticipated Transient Without Scram (ATWS) events. For EAL classification, however, ATWS is intended to mean any trip failure event that does not achieve reactor shutdown. If RPS actuation fails to assure reactor shutdown, positive control of reactivity is at risk and could cause a threat to fuel clad, RCS and Primary Containment integrity.

7. Loss of Communications

Certain events that degrade plant operator ability to effectively communicate with essential personnel within or external to the plant warrant emergency classification.

8. Hazardous Event Affecting Safety Systems

Certain hazardous natural and technological events may result in visible damage to or degraded performance of safety systems warranting classification.

Category: S –System Malfunction

Subcategory: 1 – Loss of Essential AC Power

Initiating Condition: Prolonged loss of **all** offsite and **all** onsite AC power to essential buses

EAL:

SG1.1 General Emergency

Loss of **ALL** offsite and **ALL** onsite AC power capability to **ALL** 4.16 kV ESS buses on **EITHER** unit

AND

EITHER:

Restoration of at least one 4.16 kV ESS bus in < 4 hours is **not** likely (Note 1)

OR

RPV water level **CANNOT** BE RESTORED AND MAINTAINED > -179 in.

Note 1: The ED/RM should declare the event promptly upon determining that time limit has been exceeded, or will likely be exceeded.

Mode Applicability:

1 - Power Operations, 2 - Startup, 3 - Hot Shutdown

Definition(s):

None

Basis:

The Class 1E 4.16 kV system supplies all the Engineered Safety Feature (ESF) loads and other loads that are needed for a safe and orderly plant shutdown, and for keeping the plant in a safe shutdown condition. The eight Class 1E 4.16 kV ESS Buses 1(2)A through 1(2)D receive power from either the four ESS 13.8/4.16 kV transformers or the diesel generators (A, B, C, D and additional diesel generator E). Buses 1A-1D supply Unit 1 and common loads and Buses 2A-2D supply Unit 2 loads. This configuration prevents a loss of all ESS Buses for one unit in the event one of the ESS Transformers is lost.

During normal plant operation, ESS Transformer 101 supplies preferred power to ESS Bus 1A and 2A and is an alternate power supply to ESS bus 1D and 2D. ESS Transformer 111 supplies preferred power to ESS Bus 1C and 2C, and is an alternate power supply to ESS bus 1B and 2B. ESS Transformer 201 supplies preferred power to ESS Bus 1D and 2D, and is an alternate power supply to ESS bus 1A and 2A. ESS Transformer 211 supplies preferred power to ESS Bus 1B and 2B, and is an alternate power supply to ESS bus 1C and 2C.

On a loss of a preferred power source, the bus rapidly transfers to the alternate power source to maintain component power. If both the preferred and alternate power sources are lost, the associated standby diesel generator connects to the ESS bus. (ref. 2-6)

Four hours is the station blackout coping time (ref. 7).

Indication of continuing core cooling degradation is manifested by the inability to restore and maintain RPV water level above the Minimum Steam Cooling Reactor Water Level (-179 in.) (ref. 8). Core submergence is the most desirable means of core cooling, however when RPV level is below TAF, the uncovered portion of the core can be cooled by less reliable means (i.e., steam cooling or spray cooling).

This IC addresses a prolonged loss of all power sources to AC emergency buses. A loss of all AC power compromises the performance of all SAFETY SYSTEMS requiring electric power including those necessary for emergency core cooling, containment heat removal/pressure control, spent fuel heat removal and the ultimate heat sink. A prolonged loss of these buses will lead to a loss of one or more fission product barriers. In addition, fission product barrier monitoring capabilities may be degraded under these conditions.

The EAL should require declaration of a General Emergency prior to meeting the thresholds for IC FG1. This will allow additional time for implementation of offsite protective actions.

Escalation of the emergency classification from Site Area Emergency will occur if it is projected that power cannot be restored to at least one AC emergency bus by the end of the analyzed station blackout coping period. Beyond this time, plant responses and event trajectory are subject to greater uncertainty, and there is an increased likelihood of challenges to multiple fission product barriers.

The estimate for restoring at least one emergency bus should be based on a realistic appraisal of the situation. Mitigation actions with a low probability of success should not be used as a basis for delaying a classification upgrade. The goal is to maximize the time available to prepare for, and implement, protective actions for the public.

The EAL will also require a General Emergency declaration if the loss of AC power results in parameters that indicate an inability to adequately remove decay heat from the core.

Basis Reference(s):

1. FSAR Section 8.2 Offsite Power System
2. FSAR Section 8.3 Onsite Power System
3. Technical Specifications 3.8.1 AC Sources – Operating
4. Technical Specifications 3.8.7 Distribution System – Operating
5. ON-104 (204)-001 Units 1(2) Response to Loss of All Offsite Power
6. EO-100 (200)-030 UNIT 1(2) Response to Station Blackout
7. FSAR Section 15.9 STATION BLACKOUT (SBO)
8. EO-000-102 RPV Control
9. NEI 99-01 SG1

Category: S –System Malfunction

Subcategory: 1 – Loss of Essential AC Power

Initiating Condition: Loss of **all** essential AC and vital DC power sources for 15 minutes or longer

EAL:

SG1.2 General Emergency

Loss of **ALL** offsite and **ALL** onsite AC power capability to **ALL** 4.16 kV ESS buses on **EITHER** unit
for ≥15 min.

AND

Indicated voltage is < 105 VDC on **ALL** of the following vital 125 VDC main distribution buses on the affected unit for ≥15 min. (Note 1):

- 1D612 (2D612)
- 1D622 (2D622)
- 1D632 (2D632)
- 1D642 (2D642)

Note 1: The ED/RM should declare the event promptly upon determining that time limit has been exceeded, or will likely be exceeded.

Mode Applicability:

1 - Power Operations, 2 - Startup, 3 - Hot Shutdown

Definition(s):

None

Basis:

This EAL addresses operating experience from the March 2011 accident at Fukushima Daiichi.

The Class 1E 4.16 kV system supplies all the Engineered Safety Feature (ESF) loads and other loads that are needed for a safe and orderly plant shutdown, and for keeping the plant in a safe shutdown condition. The eight Class 1E 4.16 kV ESS Buses 1(2)A through 1(2)D receive power from either the four ESS 13.8/4.16 kV transformers or the diesel generators (A, B, C, D and additional diesel generator E). Buses 1A-1D supply Unit 1 and common loads and Buses 2A-2D supply Unit 2 loads. This configuration prevents a loss of all ESS Buses for one unit in the event one of the ESS Transformers is lost.

During normal plant operation, ESS Transformer 101 supplies preferred power to ESS Bus 1A and 2A and is an alternate power supply to ESS bus 1D and 2D. ESS Transformer 111 supplies preferred power to ESS Bus 1C and 2C, and is an alternate power supply to ESS bus 1B and 2B. ESS Transformer 201 supplies preferred power to ESS Bus 1D and 2D, and is an alternate power supply to ESS bus 1A and 2A. ESS Transformer 211 supplies preferred power to ESS Bus 1B and 2B, and is an alternate power supply to ESS bus 1C and 2C.

On a loss of a preferred power source, the bus rapidly transfers to the alternate power source to maintain component power. If both the preferred and alternate power sources are lost, the associated standby diesel generator connects to the ESS bus. (ref. 1-6)

The Class 1E Battery Banks are 1(2)D610 (Channel A), 1(2)D620 (Channel B), 1(2)D630 (Channel C), and 1(2)D640 (Channel D). Each bank consists of 60 cells connected in series. Each cell produces a nominal voltage of 2.06 VDC resulting in a total battery bank terminal voltage of 123.6 VDC. All battery banks are designed to supply power to its load center for four hours in the event of a loss of power from its battery charger (ref. 7-9).

105 VDC is the minimum design voltage limit (ref. 10).

Indicated voltage for the vital 125 VDC main distribution buses is local only. Local voltage indication is available for each bus based on dispatching a field operator in accordance with Control Room alarm response procedure AR-1(2)06-001 (A12,B12,C12,D12). The 15 minute classification clock begins upon receipt of the 125V DC Panel System Trouble alarm in the Control Room. If battery voltage cannot be verified to be greater than or equal to 105 VDC within the 15 minutes, emergency classification must be made under this EAL.

This IC addresses a concurrent and prolonged loss of both emergency AC and Vital DC power. A loss of all emergency AC power compromises the performance of all SAFETY SYSTEMS requiring electric power including those necessary for emergency core cooling, containment heat removal/pressure control, spent fuel heat removal and the ultimate heat sink. A loss of vital DC power compromises the ability to monitor and control SAFETY SYSTEMS. A sustained loss of both emergency AC and vital DC power will lead to multiple challenges to fission product barriers.

Fifteen minutes was selected as a threshold to exclude transient or momentary power losses. The 15-minute emergency declaration clock begins at the point when both EAL thresholds are met.

Basis Reference(s):

1. FSAR Section 8.2 Offsite Power System
2. FSAR Section 8.3 Onsite Power System
3. Technical Specifications 3.8.1 AC Sources – Operating
4. Technical Specifications 3.8.7 Distribution System – Operating
5. ON-104 (204)-001 Units 1(2) Response to Loss of All Offsite Power
6. EO-100 (200)-030 UNIT 1(2) Response to Station Blackout
7. FSAR Section 8.3.2 DC Power Systems
8. Susquehanna Drawing No. E107159, Sheet 1, "Single Line Meter & Relay Diagram 125 VDC, 250 VDC & 120 VAC Systems"
9. Technical Specifications 3.8.5 DC Sources – Shutdown
10. ON-102(202)-610, -620, -630, -640 Loss of 125V DC
11. AR-1(2)06-001 Main Turbine/Generator, Computer HVAC, Instrument AC, 24V DC, 125V DC, 250V DC Panel 2C651
12. NEI 99-01 SG8

Category: S – System Malfunction

Subcategory: 1 – Loss of Essential AC Power

Initiating Condition: Loss of **all** offsite power and **all** onsite AC power to essential buses for 15 minutes or longer

EAL:

SS1.1	**Site Area Emergency**
Loss of **ALL** offsite and **ALL** onsite AC power capability to **ALL** 4.16 kV ESS buses on **EITHER** unit for ≥15 min. (Note 1)	

Note 1: The ED/RM should declare the event promptly upon determining that time limit has been exceeded, or will likely be exceeded.

Mode Applicability:

1 - Power Operations, 2 - Startup, 3 - Hot Shutdown

Definition(s):

None

Basis:

The Class 1E 4.16 kV system supplies all the Engineered Safety Feature (ESF) loads and other loads that are needed for a safe and orderly plant shutdown, and for keeping the plant in a safe shutdown condition. See Figure S-1 (ref. 1, 2) The eight Class 1E 4.16 kV ESS Buses 1(2)A through 1(2)D receive power from either the four ESS 13.8/4.16 kV transformers or the diesel generators (A, B, C, D and additional diesel generator E). Buses 1A-1D supply Unit 1 and common loads and Buses 2A-2D supply Unit 2 loads. This configuration prevents a loss of all ESS Buses for one unit in the event one of the ESS Transformers is lost.

During normal plant operation, ESS Transformer 101 supplies preferred power to ESS Bus 1A and 2A and is an alternate power supply to ESS bus 1D and 2D. ESS Transformer 111 supplies preferred power to ESS Bus 1C and 2C, and is an alternate power supply to ESS bus 1B and 2B. ESS Transformer 201 supplies preferred power to ESS Bus 1D and 2D, and is an alternate power supply to ESS bus 1A and 2A. ESS Transformer 211 supplies preferred power to ESS Bus 1B and 2B, and is an alternate power supply to ESS bus 1C and 2C.

On a loss of a preferred power source, the bus rapidly transfers to the alternate power source to maintain component power. If both the preferred and alternate power sources are lost, the associated standby diesel generator connects to the ESS bus. (ref. 2-6)

The 15-minute interval was selected as a threshold to exclude transient or momentary power losses. The interval begins when both offsite and onsite AC power are lost.

This IC addresses a total loss of AC power that compromises the performance of all SAFETY SYSTEMS requiring electric power including those necessary for emergency core cooling, containment heat removal/pressure control, spent fuel heat removal and the ultimate heat sink.

In addition, fission product barrier monitoring capabilities may be degraded under these conditions. This IC represents a condition that involves actual or likely major failures of plant functions needed for the protection of the public.

Fifteen minutes was selected as a threshold to exclude transient or momentary power losses.

Escalation of the emergency classification level would be via ICs RG1, FG1 or SG1.

Basis Reference(s):

1. FSAR Section 8.2 Offsite Power System
2. FSAR Section 8.3 Onsite Power System
3. Technical Specifications 3.8.1 AC Sources – Operating
4. Technical Specifications 3.8.7 Distribution System – Operating
5. ON-104 (204)-001 Units 1(2) Response to Loss of All Offsite Power
6. EO-100 (200)-030 UNIT 1(2) Response to Station Blackout
7. NEI 99-01 SS1

Figure S-1 ESS 13.8/4.16 kV Transformers and Distribution (ref. 1)

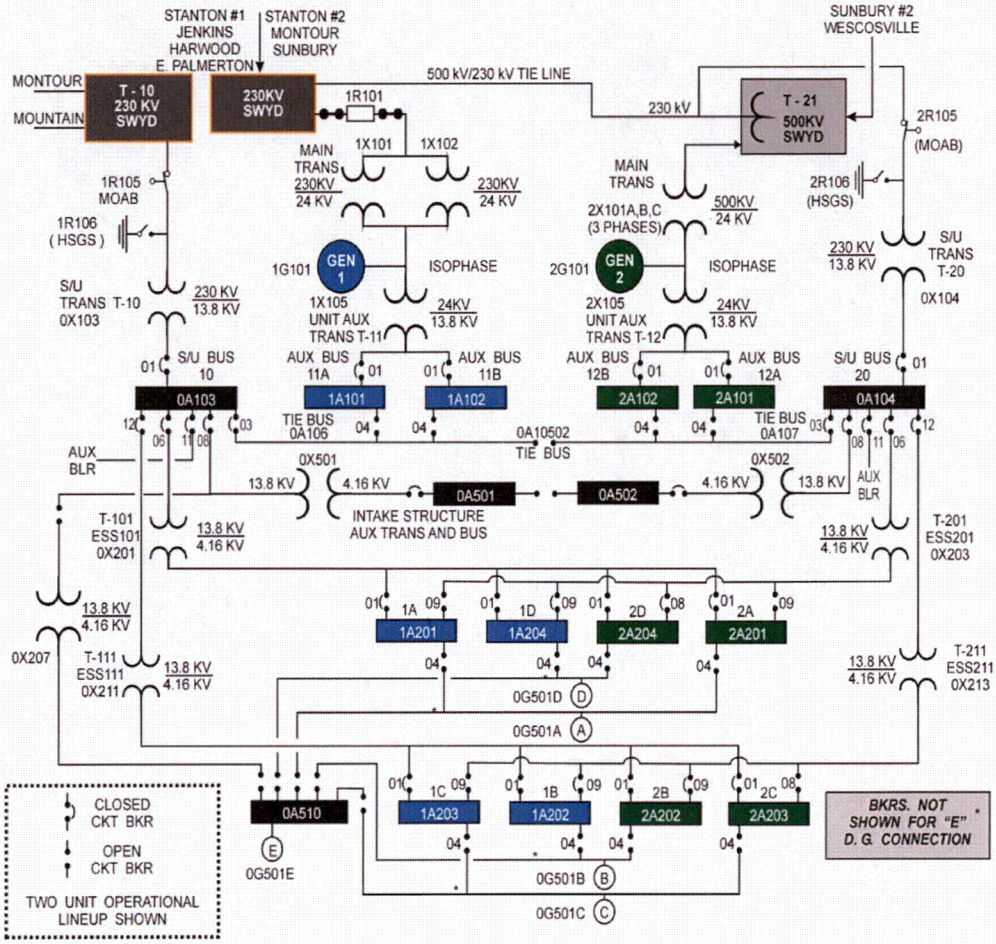

Category: S – System Malfunction

Subcategory: 1 – Loss of Essential AC Power

Initiating Condition: Loss of **all but one** AC power source to essential buses for 15 minutes or longer

EAL:

SA1.1 Alert

AC power capability to **ALL** 4.16 kV ESS buses on **EITHER** unit (Table S-5) reduced to a single power source for ≥15 min. (Note 1)

AND

Any additional single power source failure will result in loss of **ALL** AC power to SAFETY SYSTEMS

Note 1: The ED/RM should declare the event promptly upon determining that time limit has been exceeded, or will likely be exceeded.

Table S-5 AC 4.16 kV ESS buses
Unit 1: • 1A201 • 1A202 • 1A203 • 1A204 **Unit 2:** • 2A201 • 2A202 • 2A203 • 2A204

Mode Applicability:

1 - Power Operations, 2 - Startup, 3 - Hot Shutdown

Definition(s):

SAFETY SYSTEM - A system required for safe plant operation, cooling down the plant and/or placing it in the cold shutdown condition, including the ECCS. These are typically systems classified as safety-related (as defined in 10CFR50.2):

Those structures, systems and components that are relied upon to remain functional during and following design basis events to assure:

(1) The integrity of the reactor coolant pressure boundary;

(2) The capability to shut down the reactor and maintain it in a safe shutdown condition;

(3) The capability to prevent or mitigate the consequences of accidents which could result in potential offsite exposures.

Basis:

Basis:

The Class 1E 4.16 kV system supplies all the Engineered Safety Feature (ESF) loads and other loads that are needed for a safe and orderly plant shutdown, and for keeping the plant in a safe shutdown condition. See Figure S-1 (ref. 1, 2) The eight Class 1E 4.16 kV ESS Buses 1(2)A through 1(2)D receive power from either the four ESS 13.8/4.16 kV transformers or the diesel generators (A, B, C, D and additional diesel generator E). Buses 1A-1D supply Unit 1 and common loads and Buses 2A-2D supply Unit 2 loads. This configuration prevents a loss of all ESS Buses for one unit in the event one of the ESS Transformers is lost.

During normal plant operation, ESS Transformer 101 supplies preferred power to ESS Bus 1A and 2A and is an alternate power supply to ESS bus 1D and 2D. ESS Transformer 111 supplies preferred power to ESS Bus 1C and 2C, and is an alternate power supply to ESS bus 1B and 2B. ESS Transformer 201 supplies preferred power to ESS Bus 1D and 2D, and is an alternate power supply to ESS bus 1A and 2A. ESS Transformer 211 supplies preferred power to ESS Bus 1B and 2B, and is an alternate power supply to ESS bus 1C and 2C.

On a loss of a preferred power source, the bus rapidly transfers to the alternate power source to maintain component power. If both the preferred and alternate power sources are lost, the associated standby diesel generator connects to the ESS bus. (ref. 2-6)

The 15-minute interval was selected as a threshold to exclude transient or momentary power losses. If the capability of a second source of emergency bus power is not restored within 15 minutes, an Alert is declared under this EAL.

This hot condition EAL is equivalent to the cold condition EAL CU2.1.

This IC describes a significant degradation of offsite and onsite AC power sources such that any additional single failure would result in a loss of all AC power to SAFETY SYSTEMS. In this condition, the sole AC power source may be powering one, or more than one, train of safety-related equipment. This IC provides an escalation path from IC SU1.

An “AC power source” is a source recognized in AOPs, and capable of supplying required power to an emergency bus. Some examples of this condition are presented below.

- A loss of all offsite power with a concurrent failure of all but one emergency power source (e.g., an onsite diesel generator).
- A loss of all offsite power and loss of all emergency power sources (e.g., onsite diesel generators) with a single train of emergency buses being back-fed from the unit main generator.
- A loss of emergency power sources (e.g., onsite diesel generators) with a single train of emergency buses being back-fed from an offsite power source.

Fifteen minutes was selected as a threshold to exclude transient or momentary losses of power.

Escalation of the emergency classification level would be via IC SS1.

Basis Reference(s):

1. FSAR Section 8.2 Offsite Power System
2. FSAR Section 8.3 Onsite Power System
3. Technical Specifications 3.8.1 AC Sources – Operating
4. Technical Specifications 3.8.7 Distribution System – Operating
5. ON-104 (204)-001 Units 1(2) Response to Loss of All Offsite Power
6. EO-100 (200)-030 UNIT 1(2) Response to Station Blackout
7. NEI 99-01 SA1

Figure S-1 ESS 13.8/4.16 kV Transformers and Distribution (ref. 1)