Security-Related Information
Figure Withheld Under CFR 2.390

NAC INTERNATIONAL

LEGAL WEIGHT TRUCK
TRANSPORT CASK ASSY
PWR/BWR ROD
TRANSPORT CANISTER

PROJECT 315-40 | DRAWING 104 | REV 6 | SH 2 OF 3

Security-Related Information
Figure Withheld Under CFR 2.390

NAC INTERNATIONAL

LEGAL WEIGHT TRUCK
TRANSPORT CASK ASSY
PWR/BWR ROD
TRANSPORT CANISTER

PROJECT	DRAWING	REV
315-40	104	6
	SH 3 OF 3	

Security-Related Information
Figure Withheld Under CFR 2.390

ASSY	ASSY	ASSY	ASSY	ASSY
QUANTITY				

DIMENSIONING AND TOLERANCING SHALL BE PER ANSI Y14.5-82
UNSPECIFIED DIMENSIONS AND TOLERANCES SHOWN BELOW.
DIMENSIONS ARE IN INCHES. FRACTIONAL TOLERANCE: ±1/8

SYM.	GEOMETRY	.XXX	TOL.	.XX	TOL.
	FLATNESS	UNDER 3		UNDER 6	±.04
		3-12		6-18	±.06
	STRAIGHTNESS	OVER 12		OVER 18	±.09
		.X	±.1	ANGLES ±.5°	
	ANGULARITY	ALL UNSPECIFIED TOOL RADII: .01 - .03			
	PERPENDICULARITY	BREAK ALL SHARP CORNERS .01 - .03			
	PARALLELISM	ALL UNSPECIFIED MACHINED SURFACES SHALL BE ▽ OR BETTER			
	CONCENTRICITY	NEXT ASSEMBLY: 315-40-104			
	TRUE POSITION	DRAWING TYPE: LICENSE			

GROUP	NAME	DATE
PREPARER	R. Walker	8-16-00
CHECKER	[signature]	8-18-00
PROJECT MANAGER	[signature]	8-18-00
DIRECTOR DESIGN AND ANALYSIS	[signature]	8-18-00
DIRECTOR, LICENSING	J.C. Thompson	8/21/00
VICE PRESIDENT, QUALITY	[signature] for	8/22/00

NAC INTERNATIONAL

PWR INSERT,
PWR/BWR TRANSPORT
CANISTER

PROJECT 315-40	DRAWING 105	REV 3
SCALE 1/4	EST.WT. NOTED	SH 1 OF 2

3:04PM 8-18-2000

NAC DCRM 01

Security-Related Information
Figure Withheld Under CFR 2.390

NAC INTERNATIONAL

PWR INSERT,
PWR/BWR TRANSPORT
CANISTER

PROJECT 315-40		DRAWING 105	REV 3
SCALE 1/4	EST.WT. NOTED	SH 2 OF 2	3.00PM 8-16-2000

Security-Related Information
Figure Withheld Under CFR 2.390

NAC INTERNATIONAL

MTR PLATE CANISTER,
LWT CASK

PROJECT 315-40	DRAWING 106	REV 2
SCALE N.T.S.	EST WT ⟨2⟩	SH 2 OF 3

3:10PM
2-28-2012

R-217659

Security-Related Information
Figure Withheld Under CFR 2.390

ASSY	ASSY	ASSY	ASSY	ASSY
QUANTITY				

DIMENSIONING AND TOLERANCING SHALL BE PER ANSI Y14.5-94
UNSPECIFIED DIMENSIONS AND TOLERANCES SHOWN BELOW.
DIMENSIONS ARE IN INCHES. FRACTIONAL TOLERANCE: ±1/8

SYM.	GEOMETRY	.XXX	TOL.	.XX	TOL.
	FLATNESS	UNDER 3		UNDER 6	±.04
		3-12		6-18	±.06
	STRAIGHTNESS	OVER 12		OVER 18	±.09
		.X	±.1	ANGLES ±.5°	
	ANGULARITY	ALL UNSPECIFIED TOOL RADII: .01 - .03			
	PERPENDICULARITY	BREAK ALL SHARP CORNERS .01 - .03			
	PARALLELISM	ALL UNSPECIFIED MACHINED SURFACES SHALL BE ∇ OR BETTER			
	CONCENTRICITY	NEXT ASSEMBLY: N/A			
	TRUE POSITION	DRAWING TYPE: LICENSE			

GROUP	NAME	DATE
PREPARER		2/29/12
CHECKER		2-29-12
PROJECT MANAGER		3/1/12
ENGINEERING		3/1/12
LICENSING		3/2/12
QUALITY		3/2/12

NAC INTERNATIONAL

MTR PLATE CANISTER,
LWT CASK

PROJECT	DRAWING	REV
315-40	106	2

SCALE N.T.S. ⟨2⟩ FST.WT ⟨2⟩ SH 1 OF 3 5:10PM 2-28-2012

Security-Related Information
Figure Withheld Under CFR 2.390

NAC INTERNATIONAL

MTR PLATE CANISTER,
LWT CASK

PROJECT 315-40	DRAWING 106	REV 2
SCALE N.T.S.	EST. WT. ⟨2⟩	SH 3 OF 3

P141924

Security-Related Information
Figure Withheld Under CFR 2.390

ASSY	ASSY	ASSY
QUANTITY		

DIMENSIONING AND TOLERANCING SHALL BE PER ASME Y14.5-94
UNSPECIFIED DIMENSIONS AND TOLERANCES SHOWN BELOW.
DIMENSIONS ARE IN INCHES. FRACTIONAL TOLERANCE: ±1/8

SYM.	GEOMETRY	.XXX	TOL.	.XX	TOL.
	FLATNESS	UNDER 3	±.003	UNDER 6	±.02
	STRAIGHTNESS	3-12	±.006	6-18	±.03
	ANGULARITY	OVER 12	±.010	OVER 18	±.06
	PERPENDICULARITY	.X	±.1	ANGLES ±0.5°	
	PARALLELISM	ALL UNSPECIFIED TOOL RADII: .015 - .030			
	CONCENTRICITY	BREAK ALL SHARP CORNERS .015 - .030			
	TRUE POSITION	ALL UNSPECIFIED MACHINED SURFACES SHALL BE 250 OR BETTER			

NEXT ASSEMBLY: 315-40-111

DRAWING TYPE: LICENSE

GROUP	NAME	DATE
PREPARED	[signature]	9/6/01
CHECKED	R. McCl[illegible]	9-6-01
PROJECT MANAGER	[signature]	9/6/01
DIRECTOR DESIGN AND ANALYSIS	[signature]	9-10-01
DIRECTOR LICENSING	[signature] Thompson	9/6/01
VICE PRESIDENT, QUALITY	B Barrett for RHS	9/10/01

NAC INTERNATIONAL

WELDMENT,
7 CELL BASKET,
TOP MODULE,
DIDO FUEL

PROJECT 315-40 | DRAWING 108 | REV 1

SCALE 1/2.5 | EST.WT. NOTED | SH 1 OF 3 | 1:56PM 9-6-2001

NAC DCRM 01

R141324

Security-Related Information
Figure Withheld Under CFR 2.390

NAC INTERNATIONAL

WELDMENT,
7 CELL BASKET,
TOP MODULE,
DIDO FUEL

PROJECT 315-40		DRAWING 108	REV 1
SCALE 1/2	EST. WT. NOTED	SH 2 OF 3	1:36PM 8-6-2001

R141924

Security-Related Information
Figure Withheld Under CFR 2.390

NAC INTERNATIONAL

WELDMENT,
7 CELL BASKET,
TOP MODULE,
DIDO FUEL

PROJECT 315-40	DRAWING 108	REV 1
SCALE 1/2	EST.WT. NOTED	SH 3 OF 3

μ141925

Security-Related Information
Figure Withheld Under CFR 2.390

NAC
DCRM
01

ASSY	ASSY	ASSY
QUANTITY		

DIMENSIONING AND TOLERANCING SHALL BE PER ASME Y14.5-94. UNSPECIFIED DIMENSIONS AND TOLERANCES SHOWN BELOW. DIMENSIONS ARE IN INCHES. FRACTIONAL TOLERANCE: ±1/8

SYM.	GEOMETRY	.XXX	TOL.	.XX	TOL.
⏥	FLATNESS	UNDER 3	±.003	UNDER 6	±.02
		3-12	±.005	6-18	±.03
—	STRAIGHTNESS	OVER 12	±.010	OVER 18	±.06
		.X	±.1	ANGLES ±0.5°	
∠	ANGULARITY	ALL UNSPECIFIED TOOL RADII: .015 - .030			
⊥	PERPENDICULARITY	BREAK ALL SHARP CORNERS .015 - .030			
//	PARALLELISM	ALL UNSPECIFIED MACHINED SURFACES SHALL BE ▽ OR BETTER			
◎	CONCENTRICITY	NEXT ASSEMBLY: 315-40-111			
⊕	TRUE POSITION	DRAWING TYPE: LICENSE			

GROUP	NAME	DATE
PREPARER	[signature]	9/6/01
CHECKER	R. [signature]	9-6-01
PROJECT MANAGER	[signature]	9/6/01
DIRECTOR DESIGN AND ANALYSIS	[signature]	9-10-01
DIRECTOR, LICENSING	AC Thompson	9/6/01
VICE PRESIDENT, QUALITY	[signature] for RHS	9/10/01

NAC INTERNATIONAL

WELDMENT,
7 CELL BASKET,
INTERMEDIATE MODULE,
DIDO FUEL

PROJECT 315-40		DRAWING 109	REV 1
SCALE 1/2.5	EST.WT. NOTED	SH 1 OF 3	2:16PM 9-6-2001

R141920

Security-Related Information
Figure Withheld Under CFR 2.390

NAC INTERNATIONAL

WELDMENT,
7 CELL BASKET,
INTERMEDIATE MODULE,
DIDO FUEL

PROJECT 315-40	DRAWING 109	REV 1
SCALE 1/2	EST.WT. NOTED	SH 2 OF 3

2:15PM 9-6-2001

R141925

Security-Related Information
Figure Withheld Under CFR 2.390

NAC INTERNATIONAL

WELDMENT,
7 CELL BASKET,
INTERMEDIATE MODULE,
DIDO FUEL

PROJECT 315-40		DRAWING 109	REV 1
SCALE 1/2	EST.WT. NOTED	SH 3 OF 3	2:17PM 9-6-2001

R141926

Security-Related Information
Figure Withheld Under CFR 2.390

ASSY	ASSY	ASSY
QUANTITY		

DIMENSIONING AND TOLERANCING SHALL BE PER ASME Y14.5-94 UNSPECIFIED DIMENSIONS AND TOLERANCES SHOWN BELOW. DIMENSIONS ARE IN INCHES. FRACTIONAL TOLERANCE: ±1/8

SYM.	GEOMETRY	.XXX	TOL.	.XX	TOL.
	FLATNESS	UNDER 3	±.003	UNDER 6	±.02
		3-12	±.005	6-18	±.03
	STRAIGHTNESS	OVER 12	±.010	OVER 18	±.06
		.X	±.1	ANGLES ±0.5°	
	ANGULARITY	ALL UNSPECIFIED TOOL RADII: .015 - .030			
	PERPENDICULARITY	BREAK ALL SHARP CORNERS .015 - .030			
	PARALLELISM	ALL UNSPECIFIED MACHINED SURFACES SHALL BE 125 OR BETTER			
	CONCENTRICITY	NEXT ASSEMBLY: 315-40-111			
	TRUE POSITION	DRAWING TYPE: LICENSE			

GROUP	NAME	DATE
PREPARER	[signature]	9/6/01
CHECKER	R. [signature]	9-6-01
PROJECT MANAGER	[signature]	9/6/01
DIRECTOR DESIGN AND ANALYSIS	[signature]	9/10/01
DIRECTOR, LICENSING	J.C. Thompson	9/6/01
VICE PRESIDENT, QUALITY	[signature] for RHS	9/10/01

NAC INTERNATIONAL

WELDMENT,
7 CELL BASKET,
BASE MODULE,
DIDO FUEL

PROJECT 315-40	DRAWING 110	REV 1
SCALE 1/2.5	EST.WT. NOTED	SH 1 OF 3 — 2:37PM 9-6-2001

NAC DCRM 01

R141926

Security-Related Information
Figure Withheld Under CFR 2.390

NAC INTERNATIONAL

WELDMENT,
7 CELL BASKET,
BASE MODULE,
DIDO FUEL

PROJECT 315-40	DRAWING 110	REV 1
SCALE 1/2	EST.WT. NOTED	SH 2 OF 3

2:36PM 6-8-2001

R141926

Security-Related Information
Figure Withheld Under CFR 2.390

NAC INTERNATIONAL

WELDMENT,
7 CELL BASKET,
BASE MODULE,
DIDO FUEL

PROJECT 315-40		DRAWING 110	REV 1
SCALE 1/2	EST.WT. NOTED	SH 3 OF 3	2:37PM 8-6-2001

K-297549

Security-Related Information
Figure Withheld Under CFR 2.390

UNLESS OTHERWISE STATED	GROUP	NAME	DATE
DIMENSIONING AND TOLERANCING SHALL BE PER ASME Y14.5M-94	PREPARED	[signature]	7/29/08
ALL THREAD DEPTH CALLOUTS ARE TO BE CONSIDERED AS A MIN. DEPTH OF PERFECT THREADS.	CHECKED	[signature]	8/1/08
	PROJECT MANAGER	[signature]	8/1/08
	ENGINEERING	[signature]	8/6/08
ALL DIMENSIONS ARE IN INCHES	LICENSING	[signature]	8-8-08
MACHINED SURFACES TO BE 125 OR BETTER	QUALITY	[signature]	8-11-08
NEXT ASSEMBLY: N/A			
DRAWING TYPE: LICENSE			

NAC INTERNATIONAL

LEGAL WEIGHT TRUCK
TRANSPORT CASK ASSY
DIDO FUEL

PROJECT	DRAWING	REV
315-40	111	2
	SH 1 OF 1	10:13AM 7-29-2008

NAC DCRM 01

K-138692

REV	CHANGE
0	INITIAL ISSUE

Security-Related Information
Figure Withheld Under CFR 2.390

ASSY	ASSY	ASSY
QUANTITY		

DIMENSIONING AND TOLERANCING SHALL BE PER ASME Y14.5-94
UNSPECIFIED DIMENSIONS AND TOLERANCES SHOWN BELOW.
DIMENSIONS ARE IN INCHES. FRACTIONAL TOLERANCE: ±1/8

SYM.	GEOMETRY	.XXX	TOL.	.XX	TOL.
		UNDER 3	±.003	UNDER 6	±.02
	FLATNESS	3-12	±.005	6-18	±.03
	STRAIGHTNESS	OVER 12	±.010	OVER 18	±.06
		.X	±.1	ANGLES ±0.5°	
∠	ANGULARITY	ALL UNSPECIFIED TOOL RADII: .015 - .030			
⊥	PERPENDICULARITY	BREAK ALL SHARP CORNERS .015 - .030			
//	PARALLELISM	ALL UNSPECIFIED MACHINED SURFACES SHALL BE ▽ OR BETTER			
◎	CONCENTRICITY	NEXT ASSEMBLY: 315-40-111			
⊕	TRUE POSITION	DRAWING TYPE: LICENSE			

GROUP	NAME	DATE
PREPARER	[signature]	3/5/01
CHECKER	R. Walker	3-5-01
PROJECT MANAGER	[signature]	3/5/01
DIRECTOR DESIGN AND ANALYSIS	[signature]	3-5-01
DIRECTOR LICENSING	[signature]	3/6/01
NAC PRESIDENT, QUALITY	[signature] for	3/6/01

NAC INTERNATIONAL

SPACERS,
TOP MODULE
DIDO FUEL

PROJECT 315-40	DRAWING 113	REV 0
SCALE 1/2	EST. WT. NOTED	SH 1 OF 1

12:44PM 3-3-2001

NAC DCRM 01

Security-Related Information
Figure Withheld Under CFR 2.390

1			11	HTGR SPACER TUBE	304 ST. STL.	ASTM A312		4" PIPE, SCH 40
	1		10	RERTR SPACER TUBE	304 ST. STL.	ASTM A312		4" PIPE, SCH 40
2	2		9	PLATE	304 ST. STL.	ASTM A276/A240		1/4 BAR/PLATE
		2	8	GUIDE PLATE	304 ST. STL.	ASTM A240		5/16 PLATE
		2	7	SPACER PLATE	304 ST. STL.	ASTM A240		5/16 PLATE
		4	6	GRAPPLE LIFT PLATE	304 ST. STL.	ASTM A240		5/16 PLATE
		4	5	GUIDE BAR	304 ST. STL.	ASTM A276/A240		1/2 BAR/PLATE
		2	4	TUBE	304 ST. STL.	ASTM A511		6.00 OD X .25 WALL
		1	3	UPPER SUPPORT PLATE	304 ST. STL.	ASTM SA240		1/2 PLATE
		1	2	MIDDLE SUPPORT PLATE	304 ST. STL.	ASTM SA240		1 PLATE
		1	1	LOWER SUPPORT PLATE	304 ST. STL.	ASTM SA240		1/2 PLATE
97 ASSY QUANTITY	98 ASSY	99 ASSY	ITEM	NAME	MATERIAL	SPEC	DRAWING No.	DESCRIPTION

NAC INTERNATIONAL

DIMENSIONING AND TOLERANCING SHALL BE PER ASME Y14.5-94
UNSPECIFIED DIMENSIONS AND TOLERANCES SHOWN BELOW.
DIMENSIONS ARE IN INCHES. FRACTIONAL TOLERANCE: ±1/8

SYM.	GEOMETRY	.XXX	TOL.	.XX	TOL.
	FLATNESS	UNDER 3	±.003	UNDER 6	±.02
	STRAIGHTNESS	3-12	±.005	6-18	±.03
∠	ANGULARITY	OVER 12	±.010	OVER 18	±.06
⊥	PERPENDICULARITY	.X	±.1	ANGLES ±0.5°	
//	PARALLELISM	ALL UNSPECIFIED TOOL RADII: .015 - .030			
◎	CONCENTRICITY	BREAK ALL SHARP CORNERS .015 - .030			
⊕	TRUE POSITION	ALL UNSPECIFIED MACHINED SURFACES SHALL BE ▽ OR BETTER			

NEXT ASSEMBLY: 315-40-124
DRAWING TYPE: LICENSE

GROUP	NAME	DATE
PREPARER	R. Walker	4-29-03
CHECKER		4-29-03
PROJECT MANAGER	for RAS	4/29/03
DIRECTOR DESIGN & ANALYSIS		4-30-03
DIRECTOR LICENSING		5-1-03
VICE PRESIDENT QUALITY		5/2/03

TOP MODULE,
GENERAL ATOMICS IFM,
LWT CASK

PROJECT	DRAWING	REV
315-40	120	2
SCALE 1/3	EST. WT. NOTED	SH 1 OF 3

11:28PM 4-29-2003

NAC DCRM 01

Security-Related Information
Figure Withheld Under CFR 2.390

NAC INTERNATIONAL

TOP MODULE,
GENERAL ATOMICS IFM,
LWT CASK

PROJECT	DRAWING	REV
315-40	120	2
SCALE 1/3	EST. WT. NOTED	SH 2 OF 3
		1:35PM 4-29-2003

Security-Related Information
Figure Withheld Under CFR 2.390

NAC INTERNATIONAL

TOP MODULE,
GENERAL ATOMICS IFM,
LWT CASK

PROJECT 315-40	DRAWING 120	REV 2
SCALE 1/1	EST.WT. NOTED	SH 3 OF 3

Security-Related Information
Figure Withheld Under CFR 2.390

ASSY	ASSY	ASSY
QUANTITY		

DIMENSIONING AND TOLERANCING SHALL BE PER ASME Y14.5-94
UNSPECIFIED DIMENSIONS AND TOLERANCES SHOWN BELOW.
DIMENSIONS ARE IN INCHES. FRACTIONAL TOLERANCE: ±1/8

SYM	GEOMETRY	.XXX	TOL.	.XX	TOL.
	FLATNESS	UNDER 3	±.003	UNDER 6	±.02
		3-12	±.005	6-18	±.03
	STRAIGHTNESS	OVER 12	±.010	OVER 18	±.08
	ANGULARITY	.X	±.1	ANGLES ±0.5°	
	PERPENDICULARITY	ALL UNSPECIFIED TOOL RADII: .015 - .030			
	PARALLELISM	BREAK ALL SHARP CORNERS .015 - .030			
	CONCENTRICITY	ALL UNSPECIFIED MACHINED SURFACES SHALL BE ▽ OR BETTER			
	TRUE POSITION	NEXT ASSEMBLY: 315-40-124			
		DRAWING TYPE: LICENSE			

GROUP	NAME	DATE
PREPARER	R.W. Glass	5-3-03
CHECKER	[illegible]	5-5-03
PROJECT MANAGER	[illegible]	5/5/03
DIRECTOR ENGR. & ANALYSIS	[illegible]	5-5-03
DIRECTOR, LICENSING	J.C. Thompson	5-5-03
VICE PRESIDENT, QUALITY	[illegible]	5/8/03

NAC INTERNATIONAL

SPACER,
GENERAL ATOMICS IFM,
LWT CASK

PROJECT	315-40	DRAWING	123	REV 1
SCALE 1/3	EST.WT. NOTED	SH 1 OF 2	11:43AM 5-5-2003	

NAC DCRM 01

Security-Related Information
Figure Withheld Under CFR 2.390

NAC INTERNATIONAL

SPACER,
GENERAL ATOMICS IFM, .
LWT CASK

PROJECT 315-40	DRAWING 123	REV 1
SCALE 1/3	EST.WT. NOTED	SH 2 OF 2

11-08AM 4-29-2003

R-204655

Security-Related Information
Figure Withheld Under CFR 2.390

ASSY	ASSY	ASSY
QUANTITY		

UNLESS OTHERWISE STATED
DIMENSIONING AND TOLERANCING SHALL BE PER ASME Y14.5M-94
ALL THREAD DEPTH CALLOUTS ARE TO BE CONSIDERED AS A MIN. DEPTH OF PERFECT THREADS.

ALL DIMENSIONS ARE IN INCHES
MACHINED SURFACES TO BE ▽ OR BETTER
NEXT ASSEMBLY: N/A
DRAWING TYPE: LICENSE

GROUP	NAME	DATE
PREPARER		5-19-06
CHECKER		5/19/06
PROJECT MANAGEMENT		5/19/06
ENGINEERING		5/19/06
LICENSING	for TOM 5-22-06	
QUALITY		5-23-06

NAC INTERNATIONAL

TRANSPORT CASK ASSEMBLY,
GENERAL ATOMICS IFM,
LWT CASK

PROJECT	DRAWING	REV
315-40	124	1
1/8	N/A	SH 1 OF 1

B: SAM 5-19-2006

NAC DCRM 01

Security-Related Information
Figure Withheld Under CFR 2.390

UNLESS OTHERWISE STATED	GROUP	NAME	DATE
DIMENSIONING AND TOLERANCING SHALL BE PER ASME Y14.5M-94			
ALL THREAD DEPTH CALLOUTS ARE TO BE CONSIDERED AS A MIN. DEPTH OF PERFECT THREADS.			
ALL DIMENSIONS ARE IN INCHES			
MACHINED SURFACES TO BE ▽ OR BETTER			
NEXT ASSEMBLY: N/A			
DRAWING TYPE: LICENSE			

NAC INTERNATIONAL

TRANSPORT CASK ASSEMBLY,
FRAMATOME/EPRI,
LWT CASK

PROJECT	DRAWING	REV
315-40	125	3
	SH 1 OF 3	B SIZE 8-16-2006

NAC DORM 01

Security-Related Information
Figure Withheld Under CFR 2.390

NAC INTERNATIONAL

TRANSPORT CASK ASSEMBLY,
FRAMATOME/EPRI,
LWT CASK

PROJECT	DRAWING	REV
315-40	125	3
	SH 2 OF 3	8-18-2008

Security-Related Information
Figure Withheld Under CFR 2.390

NAC INTERNATIONAL

TRANSPORT CASK ASSEMBLY,
FRAMATOME/EPRI,
LWT CASK

PROJECT	DRAWING	REV
315-40	125	3
	SH 3 OF 3	8:55AM 5-16-2008

K-201516

Security-Related Information
Figure Withheld Under CFR 2.390

ASSY	ASSY	ASSY
QUANTITY		

DIMENSIONING AND TOLERANCING SHALL BE PER ASME Y14.5-94
UNSPECIFIED DIMENSIONS AND TOLERANCES SHOWN BELOW.
DIMENSIONS ARE IN INCHES. FRACTIONAL TOLERANCE: ±1/8

SYM.	GEOMETRY	.XXX	TOL.	.XX	TOL.
		UNDER 3	±.003	UNDER 6	±.02
	FLATNESS	3-12	±.005	6-18	±.03
	STRAIGHTNESS	OVER 12	±.010	OVER 18	±.06
		.X	±.1	ANGLES ±0.5°	
∠	ANGULARITY	ALL UNSPECIFIED TOOL RADII: .015 - .030			
⊥	PERPENDICULARITY	BREAK ALL SHARP CORNERS .015 - .030			
//	PARALLELISM	ALL UNSPECIFIED MACHINED SURFACES SHALL BE ▽ OR BETTER			
◎	CONCENTRICITY	NEXT ASSEMBLY: 315-40-125			
⊕	TRUE POSITION	DRAWING TYPE: LICENSE			

GROUP	NAME	DATE
PREPARED	R. Walker	9-23-03
CHECKED	[illegible]	9-23-03
PROJECT MANAGER	[illegible]	9/23/03
DIRECTOR DESIGN AND ANALYSIS	[illegible]	9-23-03
DIRECTOR LICENSING	[illegible]	9/23/03
VICE PRESIDENT, QUALITY	[illegible]	9-23-03

NAC INTERNATIONAL

WELDMENTS,
FRAMATOME/EPRI,
LWT CASK

PROJECT 315-40	DRAWING 126	REV 2
SCALE 1/2	EST. WT. NOTED	SH 1 OF 2

2:15PM 9-23-2003

NAC DCRM 02

Security-Related Information
Figure Withheld Under CFR 2.390

NAC INTERNATIONAL

WELDMENTS,
FRAMATOME/EPRI,
LWT CASK

PROJECT 315-40	DRAWING 126	REV 2
SCALE 1/2	EST. WT. NOTED	SH 2 OF 2

R-204657

Security-Related Information
Figure Withheld Under CFR 2.390

UNLESS OTHERWISE STATED	GROUP	NAME	DATE
DIMENSIONING AND TOLERANCING SHALL BE PER ASME Y14.5M-94	PREPARED		5-19-06
ALL THREAD DEPTH CALLOUTS ARE TO BE CONSIDERED AS A MIN. DEPTH OF PERFECT THREADS.	CHECKED		5/19/06
	PROJECT MANAGER		5/19/06
ALL DIMENSIONS ARE IN INCHES	ENGINEERING		5/22/06
MACHINED SURFACES TO BE ▽ OR BETTER	LICENSING		5/22/06
NEXT ASSEMBLY: N/A	QUALITY		5-31-06
DRAWING TYPE: LICENSE			

NAC INTERNATIONAL

SPACER ASSEMBLY,
TPBAR SHIPMENT,
LWT CASK

PROJECT 315-40 | DRAWING 127 | REV 2

SH 1 OF 2 | 8:13AM 5-19-2006

NAC DCRM 01

Security-Related Information
Figure Withheld Under CFR 2.390

NAC INTERNATIONAL

SPACER ASSEMBLY,
TPBAR SHIPMENT,
LWT CASK

PROJECT 315-40 | DRAWING 127 | REV 2

SH 2 OF 2

R-217267

Security-Related Information
Figure Withheld Under CFR 2.390

ASSY	ASSY	ASSY
QUANTITY		

UNLESS OTHERWISE STATED	GROUP	NAME	DATE
DIMENSIONING AND TOLERANCING SHALL BE PER ASME Y14.5M-94	PREPARER	Karina Matthews	12/23/11
ALL THREAD DEPTH CALLOUTS ARE TO BE CONSIDERED AS A MIN. DEPTH OF PERFECT THREADS.	CHECKER	[illegible]	12-23-11
	PROJECT MANAGER	[illegible]	12/29/11
ALL DIMENSIONS ARE IN INCHES	ENGINEER	[illegible]	12/28/11
MACHINED SURFACES TO BE 63 OR BETTER	LICENSING	[illegible]	12/28/11
NEXT ASSEMBLY: N/A	QUALITY	Roy W. Barr	1/24/12
DRAWING TYPE: LICENSE			

NAC INTERNATIONAL

LEGAL WEIGHT TRUCK
TRANSPORT CASK ASSY
TPBAR SHIPMENT
SAFETY ANALYSIS REPORT

PROJECT	DRAWING	REV
315-40	128	4
SCALE N.T.S. (4)	SH 1 OF 2	1.33PM 12-13-2011

Security-Related Information
Figure Withheld Under CFR 2.390

NAC INTERNATIONAL

LEGAL WEIGHT TRUCK
TRANSPORT CASK ASSY
TPBAR SHIPMENT
SAFETY ANALYSIS REPORT

PROJECT 315-40		DRAWING 128	REV 4
SCALE N.T.S.	EST.WT.	SH 2 OF 2	2:33PM 12-15-2011

4

R-202644

Security-Related Information
Figure Withheld Under CFR 2.390

DRAWING NAME	AUTOCAD	CAE NUMBER	
CELL NAME	032230A.DWG	DATE	5 Jan 1996

PARTS LIST

PROJECT	7340	UNLESS OTHERWISE SPECIFIED DIMENSIONS ARE IN INCHES NO BURRS OR SHARP EDGES DIMENSIONS PER ANSI-Y-14.5M	GENERAL ATOMICS SAN DIEGO, CALIFORNIA
SYSTEM	N/A	TOLERANCES ARE FRACTIONS DECIMALS ANGLES ± .X ± 0.1 ± 0.05 .XX ± 0.01 .XXX ± 0.001 125 ALL MACHINED SURFACES	TITLE RERTR SECONDARY ENCLOSURE
APPVL 2 / EC/SC N/A	B&B	CALC WT	SIZE C / SCM NO 32334 / DWG NO 032230 / REV A
DISC M / SEIS N/A	PWLS	DO NOT SCALE DRAWING	SCALE 1=1 / CAL 1B / SHEET 1 OF 1
TYPE DGE / ELEC N/A	DESIGN		

DWG. NO. 032230 REV A SH 1

NAC DCRM 01

DRAWING NAME	AUTOCAD	CAT NUMBER	
CELL NAME	032231A.DWG	DATE	5, Jan 1996

Security-Related Information
Figure Withheld Under CFR 2.390

DWG NO 032231 REV A SH 1

PROJECT	7340	UNLESS OTHERWISE SPECIFIED DIMENSIONS ARE IN INCHES NO BURRS OR SHARP EDGES DIMENSIONS PER ANSI-Y-14.5M TOLERANCES ARD FRACTIONS DECIMALS ANGLES ± X ± 0.1 ±0.05 .XX ± 0.01 .XXX ± 0.001 ALL MACHINED SURFACES 125 CALC WT	GENERAL ATOMICS SAN DIEGO, CALIFORNIA
SYSTEM	N/A		
APPVL 2	EC/SC N/A		TITLE HTGR SECONDARY ENCLOSURE
DISC N	SETS N/A		SIZE C SCM NO 32334 DWG NO 032231 REV A
TYPE DGE	ECCC N/A	DO NOT SCALE DRAWING	SCALE 1=1 DAL 1B SHEET 1 OF 1

NAC DCRM 01

R-202646

DB/LB NAME	AUTOCAD	CAE NUMBER	
CELL NAME	032236B.DWG	DATE	5, Jan 1996

Security-Related Information
Figure Withheld Under CFR 2.390

PARTS LIST

PROJECT 7340	UNLESS OTHERWISE SPECIFIED DIMENSIONS ARE IN INCHES NO BURRS OR SHARP EDGES DIMENSIONS PER ANSI-Y-14	GENERAL ATOMICS SAN DIEGO, CALIFORNIA	
SYSTEM N/A	TOLERANCES ARE FRACTIONS DECIMALS ANGLES ± .X ± 0.1 ± 0.05 .XX ± 0.01 .XXX ± 0.001 ALL MACHINED SURFACES 125	TITLE RERTR PRIMARY ENCLOSURE	
APPVL 2 / EC/SC N/A / DISC M / SEIS N/A / TYPE DGE / ELEC N/A	CALC WT / DO NOT SCALE DRAWING	SIZE C / SCM NO 32334 / DWG NO 032236	REV B
		SCALE 1=1 / QAL 1B	SHEET 1 OF 1

DWG NO 032236 REV B SH 1

NAC DCRM 01

R-202647

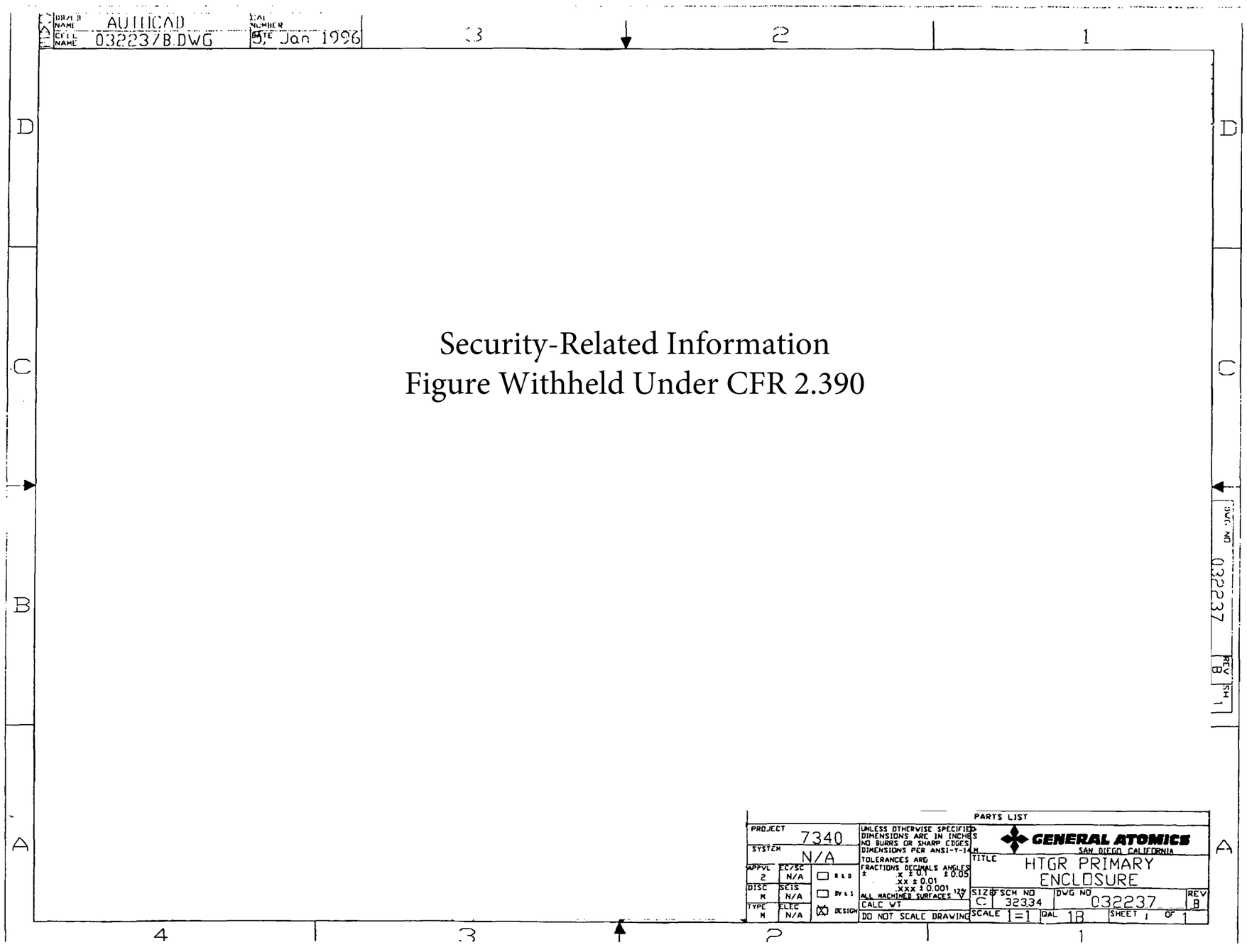

NAC DCRM 01

R-217269

Security-Related Information
Figure Withheld Under CFR 2.390

UNLESS OTHERWISE STATED	GROUP	NAME	DATE
DIMENSIONING AND TOLERANCING SHALL BE PER ASME Y14.5M-94	PREPARER	[illegible]	12/23/11
ALL THREAD DEPTH CALLOUTS ARE TO BE CONSIDERED AS A MIN DEPTH OF PERFECT THREADS.	CHECKER	[illegible]	12-23-11
	PROJECT MANAGER	[illegible]	12/28/11
	ENGINEERING	[illegible]	12/28/11
ALL DIMENSIONS ARE IN INCHES	LICENSING	[illegible]	12/28/11
MACHINED SURFACES TO BE 125 OR BETTER	QUALITY	[illegible]	1/29/12
NEXT ASSEMBLY 315-40-130			
DRAWING TYPE. LICENSE			

NAC INTERNATIONAL

CANISTER BODY ASSEMBLY, SEALED FAILED FUEL CAN, PULSTAR (2)

PROJECT	DRAWING	REV
315-40	129	2
SCALE N.T.S. (2)	SH 1 OF 1	2:33PM 12-15-2011

Rr 2 1 7 2 7 1

Security-Related Information
Figure Withheld Under CFR 2.390

UNLESS OTHERWISE STATED	GROUP	NAME	DATE
DIMENSIONING AND TOLERANCING SHALL BE PER ASME Y14.5M-94	PREPARER		12/23/11
ALL THREAD DEPTH CALLOUTS ARE TO BE CONSIDERED AS A MIN. DEPTH OF PERFECT THREADS.	CHECKER		12-23-11
	PROJECT MANAGER		12/28/11
	ENGINEERING		12/28/11
ALL DIMENSIONS ARE IN INCHES	LICENSING		12/29/11
MACHINED SURFACES TO BE 125 OR BETTER	QUALITY		1/24/12
NEXT ASSEMBLY 315-40-133			
DRAWING TYPE LICENSE			

NAC INTERNATIONAL

ASSEMBLY,
SEALED FAILED FUEL CAN,
(2) PULSTAR

PROJECT	DRAWING	REV
315-40	130	2
SCALE N.T.S (2)	SH 1 OF 1	1 OSPM 12-23-2011

Security-Related Information
Figure Withheld Under CFR 2.390

UNLESS OTHERWISE STATED	GROUP	NAME	DATE
DIMENSIONING AND TOLERANCING SHALL BE PER ASME Y14.5M-94	PREPARER		12/23/11
ALL THREAD DEPTH CALLOUTS ARE TO BE CONSIDERED AS A MIN DEPTH OF PERFECT THREADS.	CHECKER		12-23-11
	PROJECT MANAGER		12/28/11
	ENGINEERING		12/29/11
ALL DIMENSIONS ARE IN INCHES	LICENSING		12/29/11
MACHINED SURFACES TO BE 125 OR BETTER	QUALITY		1/24/12
NEXT ASSEMBLY. N/A			
DRAWING TYPE LICENSE			

NAC INTERNATIONAL

TRANSPORT CASK ASSEMBLY,
PULSTAR SHIPMENT,
LWT CASK

PROJECT 315-40	DRAWING 133	REV 2
SCALE N.T.S. (2)	SH 1 OF 2	2.39(a) 12-19-2011

Security-Related Information
Figure Withheld Under CFR 2.390

NAC INTERNATIONAL

TRANSPORT CASK ASSEMBLY,
PULSTAR SHIPMENT,
LWT CASK

PROJECT 315-40	DRAWING 133	REV 2
SCALE N.T.S. (2) EST. WT.	SH 2 OF 2	2:35PM 12-19-2011

R-1 217275

Security-Related Information
Figure Withheld Under CFR 2.390

UNLESS OTHERWISE STATED	GROUP	NAME	DATE
DIMENSIONING AND TOLERANCING SHALL BE PER ASME Y14.5M-94	PREPARER	[signature]	12/23/11
ALL THREAD DEPTH CALLOUTS ARE TO BE CONSIDERED AS A MIN. DEPTH OF PERFECT THREADS	CHECKER	[signature]	12-28-11
	PROJECT MANAGER	[signature]	12-30-11
ALL DIMENSIONS ARE IN INCHES	ENGINEERING	[signature]	12-28-11
MACHINED SURFACES TO BE ▽ OR BETTER	LICENSING	[signature]	12/28/11
NEXT ASSEMBLY: 315-40-135	QUALITY	[signature]	1/24/12
DRAWING TYPE: LICENSE			

NAC INTERNATIONAL

BODY WELDMENT,
SCREENED FUEL CAN,
PULSTAR FUEL

PROJECT 315-40	DRAWING 134	REV 2
SCALE N.T.S. (2)	SH 1 OF 1	2:06PM 12-19-2011

R-202832

Security-Related Information
Figure Withheld Under CFR 2.390

ASSY	ASSY	ASSY
QUANTITY		

UNLESS OTHERWISE STATED
DIMENSIONING AND TOLERANCING SHALL BE PER ASME Y14.5M-94
ALL THREAD DEPTH CALLOUTS ARE TO BE CONSIDERED AS A MIN. DEPTH OF PERFECT THREADS.

ALL DIMENSIONS ARE IN INCHES
MACHINED SURFACES TO BE ⊠ OR BETTER
NEXT ASSEMBLY: 315-40-133
DRAWING TYPE: LICENSE

GROUP	NAME	DATE
PREPARER	R. Wolkan	2-3-05
CHECKER	[illegible]	2-3-05
PROJECT MANAGER	John McCarthy	02/04/05
ENGINEERING	[illegible]	2/4/05
LICENSING	Anthony L Fatkin	2/9/05
QUALITY	Ray W Bass	2/14/05

NAC INTERNATIONAL

ASSEMBLY,
SCREENED FUEL CAN,
PULSTAR FUEL

PROJECT 315-40 | DRAWING 135 | REV 1
SH 1 OF 1 | 2:1 PM 2-3-2005

NAC DCRM 02

R-207550

Security-Related Information
Figure Withheld Under CFR 2.390

ASSY	ASSY	ASSY
QUANTITY		

UNLESS OTHERWISE STATED

DIMENSIONING AND TOLERANCING SHALL BE PER ASME Y14.5M-94, UNSPECIFIED DIMENSIONAL TOLERANCES ARE SHOWN BELOW.

ALL THREAD DEPTH CALLOUTS ARE TO BE CONSIDERED AS A MIN. DEPTH OF PERFECT THREADS. THE ACTUAL DEPTH OF THE THREADS IS NOT SUBJECT TO TOLERANCE CONTROLS.

DEC	UNDER 3	±.003
	3–12	±.005
	OVER 12	±.010
FIX	UNDER 6	±.02
	6–18	±.03
	OVER 18	±.06
∠	ALL	±1°
FRACTIONAL ±1/8		
ANGLES ±0.5°		

WEIGHTS ARE APPROXIMATE AND ARE TO BE USED FOR HANDLING PURPOSES ONLY

ALL DIMENSIONS ARE IN INCHES

BORDER SIZE: F (40 X 28)

ALL UNSPECIFIED TOOL RADII: .015 – .030

BREAK ALL SHARP CORNERS .015 – .030

MACHINED SURFACES TO BE ▽ OR BETTER

NEXT ASSEMBLY: N/A

DRAWING TYPE: LICENSE

GROUP	NAME	DATE
PREPARED		7/29/08
CHECKED		8/6/08
PROJECT MANAGER		8/6/08
ENGINEERING		8/6/08
LICENSING		8-8-08
QUALITY		8-11-08

NAC INTERNATIONAL

LEGAL WEIGHT TRUCK
TRANSPORT CASK ASSY
ANSTO FUEL

PROJECT	DRAWING	REV
315–40	139	1
SCALE 1/8	WEIGHT	SH 1 OF 1

8:28AM 7-29-2008

NAC DCRM 01

R-207551

Security-Related Information
Figure Withheld Under CFR 2.390

ASSY	ASSY	ASSY
QUANTITY		

UNLESS OTHERWISE STATED

DIMENSIONING AND TOLERANCING SHALL BE PER ASME Y14.5M-94, UNSPECIFIED DIMENSIONAL TOLERANCES ARE SHOWN BELOW.

ALL THREAD DEPTH CALLOUTS ARE TO BE CONSIDERED AS A MIN. DEPTH OF PERFECT THREADS. THE ACTUAL DEPTH OF THE THREADS IS NOT SUBJECT TO TOLERANCE CONTROLS.

.XXX	UNDER 3	±.003	WEIGHTS ARE APPROXIMATE AND ARE TO BE USED FOR HANDLING PURPOSES ONLY
	3-12	±.005	ALL DIMENSIONS ARE IN INCHES
	OVER 12	±.010	BORDER SIZE: F (40 X 28)
.XX	UNDER 6	±.02	ALL UNSPECIFIED TOOL RADII: .015 - .030
	6-18	±.03	BREAK ALL SHARP CORNERS .015 - .030
	OVER 18	±.06	MACHINED SURFACES TO BE ▽ OR BETTER
.X	ALL	±.1	NEXT ASSEMBLY: 315-40-139
FRACTIONAL ±1/8			
ANGLES ±0.5°			DRAWING TYPE: LICENSE

GROUP	NAME	DATE
PREPARED	[signature]	7/30/08
CHECKER	[signature]	8/6/08
PROJECT MANAGER	[signature]	8/6/08
ENGINEERING	[signature]	8/6/08
LICENSING	[signature]	8-8-08
QUALITY	[signature]	8-11-08

NAC INTERNATIONAL

WELDMENT,
7 CELL BASKET,
TOP MODULE,
ANSTO FUEL

PROJECT 315-40	DRAWING 140	REV 1
SCALE 1/2.5	WEIGHT NOTED	SH 1 OF 2 — 11:37AM 7-30-2008

NAC DCRM 01

Security-Related Information
Figure Withheld Under CFR 2.390

NAC INTERNATIONAL

WELDMENT,
7 CELL BASKET,
TOP MODULE,
ANSTO FUEL

PROJECT 315-40	DRAWING 140	REV 1
SCALE 1/2	WEIGHT N/A	SH 2 OF 2

R- 207552

Security-Related Information
Figure Withheld Under CFR 2.390

ASSY	ASSY	ASSY				
QUANTITY						

UNLESS OTHERWISE STATED
DIMENSIONING AND TOLERANCING SHALL BE PER ASME Y14.5M-94, UNSPECIFIED DIMENSIONAL TOLERANCES ARE SHOWN BELOW.
ALL THREAD DEPTH CALLOUTS ARE TO BE CONSIDERED AS A MIN. DEPTH OF PERFECT THREADS. THE ACTUAL DEPTH OF THE THREADS IS NOT SUBJECT TO TOLERANCE CONTROLS.

DEC	UNDER 3	±.002
	3-12	±.005
	OVER 12	±.010
FRAC	UNDER 6	±.02
	6-18	±.03
	OVER 18	±.06
ANG	ALL	±.1
FRACTIONAL ±1/8		
ANGLES ±0.5°		

WEIGHTS ARE APPROXIMATE AND ARE TO BE USED FOR HANDLING PURPOSES ONLY.
ALL DIMENSIONS ARE IN INCHES
BORDER SIZE: F (40 X 28)
ALL UNSPECIFIED TOOL RADII .015 - .030
BREAK ALL SHARP CORNERS .015 - .030
MACHINED SURFACES TO BE 125 OR BETTER
NEXT ASSEMBLY: 315-40-139
DRAWING TYPE: LICENSE

GROUP	NAME	DATE
PREPARED	[signature]	7/27/08
CHECKED	[signature]	8/6/08
PROJECT MANAGER	[signature]	8/6/08
ENGINEERING	[signature]	8/6/08
LICENSING	[signature]	8-8-08
QUALITY	Roy W. Barss	8-11-08

NAC INTERNATIONAL

WELDMENT,
7 CELL BASKET,
INTERMEDIATE MODULE,
ANSTO FUEL

PROJECT	DRAWING	REV
315-40	141	1
SCALE 1/2.5	WEIGHT NOTED	SH 1 OF 2

10:34AM 7-29-2008

NAC DCRM 01

Security-Related Information
Figure Withheld Under CFR 2.390

NAC INTERNATIONAL

WELDMENT,
7 CELL BASKET,
INTERMEDIATE MODULE,
ANSTO FUEL

PROJECT 315-40		DRAWING 141	REV 1
SCALE 1/2	WEIGHT NOTED	SH 2 OF 2	10:34AM 7-29-2008

R-207553

REV	CHANGE

Security-Related Information
Figure Withheld Under CFR 2.390

ASSY	ASSY	ASSY
QUANTITY		

UNLESS OTHERWISE STATED

DIMENSIONING AND TOLERANCING SHALL BE PER ASME Y14.5M–94. UNSPECIFIED DIMENSIONAL TOLERANCES ARE SHOWN BELOW.

ALL THREAD DEPTH CALLOUTS ARE TO BE CONSIDERED AS A MIN. DEPTH OF PERFECT THREADS. THE ACTUAL DEPTH OF THE THREADS IS NOT SUBJECT TO TOLERANCE CONTROLS.

.XXX	UNDER 3	±.003	WEIGHTS ARE APPROXIMATE AND ARE TO BE USED FOR HANDLING PURPOSES ONLY
	3–12	±.006	ALL DIMENSIONS ARE IN INCHES
	OVER 12	±.010	BORDER SIZE: F (40 X 28)
.XX	UNDER 6	±.02	ALL UNSPECIFIED TOOL RADII: .015 – .030
	6–18	±.03	BREAK ALL SHARP CORNERS .015 – .030
	OVER 18	±.06	MACHINED SURFACES TO BE ∇ OR BETTER
.X	ALL	±.1	NEXT ASSEMBLY: 315–40–139
FRACTIONAL ±1/8			DRAWING TYPE: LICENSE
ANGLES ±0.5°			

GROUP	NAME	DATE
PREPARER	[signature]	7/30/08
CHECKER	[signature]	8/6/08
PROJECT MANAGER	[signature]	8/6/08
ENGINEERING	[signature]	8/6/08
LICENSING	[signature]	8-8-08
QUALITY	[signature]	8-11-08

NAC INTERNATIONAL

WELDMENT,
7 CELL BASKET,
BASE MODULE,
ANSTO FUEL

PROJECT 315–40	DRAWING 142	REV 1
SCALE 1/2.5	WEIGHT NOTED	SH 1 OF 2 — 1:28PM 7–30–2008

Security-Related Information
Figure Withheld Under CFR 2.390

NAC INTERNATIONAL	
WELDMENT, 7 CELL BASKET, BASE MODULE, ANSTO FUEL	
PROJECT 315-40	DRAWING 142 REV 1
SCALE 1/2	WEIGHT NOTED SH 2 OF 2 1:33PM 7-30-2008

ML-205670

Security-Related Information
Figure Withheld Under CFR 2.390

UNLESS OTHERWISE STATED	GROUP	NAME	DATE
DIMENSIONING AND TOLERANCING SHALL BE PER ASME Y14.5M-94	PREPARER		10-20-06
ALL THREAD DEPTH CALLOUTS ARE TO BE CONSIDERED AS A MIN. DEPTH OF PERFECT THREADS.	CHECKER		10-23-06
	PROJECT MANAGER		10-23-06
ALL DIMENSIONS ARE IN INCHES	ENGINEERING		10-23-06
MACHINED SURFACES TO BE 125 OR BETTER	LICENSING		10-23-06
NEXT ASSEMBLY:	QUALITY		10-23-06
DRAWING TYPE: LICENSE			

NAC INTERNATIONAL

IRRADIATED HARDWARE,
LID SPACER,
LWT CASK

PROJECT 315-40 | DRAWING 145 | REV 0 | SH 1 OF 1 | 8:51AM 10-20-2006

NAC DCRM 01

R-20,7554

Security-Related Information
Figure Withheld Under CFR 2.390

UNLESS OTHERWISE STATED	GROUP	NAME	DATE
DIMENSIONING AND TOLERANCING SHALL BE PER ASME Y14.5M-94			
ALL THREAD DEPTH CALLOUTS ARE TO BE CONSIDERED AS A MIN. DEPTH OF PERFECT THREADS.			
	PREPARED		8/5/08
	CHECKED		8/5/08
	PROJECT MANAGER		8/5/08
	ENGINEERING		8/5/08
ALL DIMENSIONS ARE IN INCHES	LICENSING		8/5/08
MACHINED SURFACES TO BE ▽ OR BETTER	QUALITY		8.5.08
NEXT ASSEMBLY: N/A			
DRAWING TYPE: LICENSE			

NAC INTERNATIONAL

LEGAL WEIGHT TRUCK
TRANSPORT CASK ASSY
ANSTO-DIDO
COMBINATION BASKET

PROJECT	DRAWING	REV
315-40	148	0
1/8	SH 1 OF 1	11:23AM 8-3-2008

NAC DCRM 01

R-218406

Security-Related Information
Figure Withheld Under CFR 2.390

UNLESS OTHERWISE STATED	GROUP	NAME	DATE
DIMENSIONING AND TOLERANCING SHALL BE PER ASME Y14.5M-94	PREPARER		5/21/12
ALL THREAD DEPTH CALLOUTS ARE TO BE CONSIDERED AS A MIN DEPTH OF PERFECT TREADS	CHECKER		5-21-12
	PROJECT MANAGER		5/21/12
	ENGINEERING		5-21-12
ALL DIMENSIONS ARE IN INCHES	LICENSING		5/21/12
MACHINED SURFACES SHALL BE ▽ OR BETTER	QUALITY		5/22/12
NEXT ASSEMBLY N/A			
DRAWING TYPE LICENSE			

NAC INTERNATIONAL

CANISTER ASSEMBLY
SLOWPOKE FUEL

PROJECT	DRAWING	REV
315-40	156	3

SCALE	WEIGHT	SH	OF	
N. T. S.	N/A	1	4	5/21/2012

Security-Related Information
Figure Withheld Under CFR 2.390

NAC INTERNATIONAL

CANISTER ASSEMBLY
SLOWPOKE FUEL

PROJECT	DRAWING	REV
315-40	156	3
SCALE N. T. S. / WEIGHT N/A	SH 2 OF 4	5/21/2012

Security-Related Information
Figure Withheld Under CFR 2.390

NAC INTERNATIONAL

CANISTER ASSEMBLY
SLOWPOKE FUEL

PROJECT	DRAWING	REV
315-40	156	3
SCALE N. T. S. / WEIGHT N/A	SH 3 OF 4	5/21/2012

Security-Related Information
Figure Withheld Under CFR 2.390

NAC INTERNATIONAL

CANISTER ASSEMBLY
SLOWPOKE FUEL

PROJECT	DRAWING	REV
315-40	156	3
SCALE N. T. S. / WEIGHT N/A	SH 4 OF 4	5/21/2012

R1-217042

Security-Related Information
Figure Withheld Under CFR 2.390

UNLESS OTHERWISE STATED	GROUP	NAME	DATE
DIMENSIONING AND TOLERANCING SHALL BE PER ASME Y14.5M-94	PREPARER		12/23/11
ALL THREAD DEPTH CALCULATIONS ARE TO BE CONSIDERED AS MIN. DEPTH OF PERFECT THREADS	CHECKER		12/29/11
	PROJECT MANAGER		12/23/11
ALL DIMENSIONS ARE IN INCHES	ENGINEERING		12/23/11
MACHINED SURFACES SHALL BE 125 RMS OR BETTER	LICENSING		12/23/11
NEXT ASSEMBLY N/A	QUALITY		12/29/11
DRAWING TYPE LICENSE			

NAC INTERNATIONAL

LEGAL WEIGHT TRUCK
TRANSPORT CASK ASSY
SLOWPOKE FUEL

PROJECT 315-40	DRAWING 158	REV 0
SCALE N. T. S.	WEIGHT N/A	SH 1 OF 1	12/12/2011

Security-Related Information
Figure Withheld Under CFR 2.390

UNLESS OTHERWISE STATED	GROUP	NAME	DATE
DIMENSIONING AND TOLERANCING SHALL BE PER ASME Y14.5M-94.	PREPARER		10/10/12
ALL THREAD DEPTH CALLOUTS ARE TO BE CONSIDERED AS A MIN. DEPTH OF PERFECT TREADS	CHECKER		10-11-12
	PROJECT MANAGER		10/11/12
ALL DIMENSIONS ARE IN INCHES	ENGINEERING		10/11/12
MACHINED SURFACES SHALL BE ▽ OR BETTER	LICENSING		10/16/12
NEXT ASSEMBLY: N/A	QUALITY		10-17-12
DRAWING TYPE: LICENSE			

NAC INTERNATIONAL

LWT TRANSPORT CASK ASSY., AECL NRU/NRX COMPONENTS

PROJECT	DRAWING	REV
315-40	170	1
SCALE N. T. S. / WEIGHT N/A	SH 1 OF 1	10/10/2012

R-219901

Security-Related Information
Figure Withheld Under CFR 2.390

ITEM	NAME	MATERIAL	SPEC	DRAWING No.	DESCRIPTION

NAC INTERNATIONAL

UNLESS OTHERWISE STATED	GROUP	NAME	DATE
DIMENSIONING AND TOLERANCING SHALL BE PER ASME Y14.5M-94	PREPARER		9/26/12
ALL THREAD DEPTH CALLOUTS ARE TO BE CONSIDERED AS A MIN. DEPTH OF PERFECT TREADS	CHECKER		9-26-12
	PROJECT MANAGER		9/26/12
	ENGINEERING		9/27/12
ALL DIMENSIONS ARE IN INCHES	LICENSING		9/27/12
MACHINED SURFACES SHALL BE ▽ OR BETTER	QUALITY		9/27/12
NEXT ASSEMBLY 315-40-170			
DRAWING TYPE LICENSE			

LID ASSEMBLY, NRU/NRX

PROJECT	DRAWING	REV
315-40	172	0

SCALE	WEIGHT	SH	OF	
N.T.S.	N/A	1	2	9/13/2012

Security-Related Information
Figure Withheld Under CFR 2.390

NAC INTERNATIONAL

LID ASSEMBLY, NRU/NRX

PROJECT	DRAWING	REV
315-40	172	0
SCALE N. T. S. / WEIGHT N/A	SH 2 OF 2	9/13/2012

R-223631

Security-Related Information
Figure Withheld Under CFR 2.390

UNLESS OTHERWISE STATED	GROUP	NAME	DATE
DIMENSIONING AND TOLERANCING SHALL BE PER ASME Y14.5M-94.	PREPARER	[illegible]	10/17/13
ALL THREAD DEPTH CALLOUTS ARE TO BE CONSIDERED AS A MIN. DEPTH OF PERFECT THREADS	CHECKER	[illegible]	10-17-13
	PROJECT MANAGER	[illegible]	10/17/13
ALL DIMENSIONS ARE IN INCHES	ENGINEERING	[illegible]	10/18/13
MACHINED SURFACES SHALL BE ▽ OR BETTER	LICENSING	[illegible]	10/17/13
NEXT ASSEMBLY: 315-40-170	QUALITY	[illegible]	10/18/13
DRAWING TYPE: LICENSE			

NAC INTERNATIONAL

BASKET WELDMENT,
NRU/NRX

PROJECT	DRAWING	REV
315-40	173	2
SCALE N. T. S. / WEIGHT N/A	SH 1 OF 2	10/17/2013

Security-Related Information
Figure Withheld Under CFR 2.390

NAC INTERNATIONAL

BASKET WELDMENT,
NRU/NRX

PROJECT	DRAWING	REV
315-40	173	2
SCALE N. T. S. / WEIGHT N/A	SH 2 OF 2	10/17/2013

R-219903

Security-Related Information
Figure Withheld Under CFR 2.390

UNLESS OTHERWISE STATED	GROUP	NAME	DATE
DIMENSIONING AND TOLERANCING SHALL BE PER ASME Y14.5M-94.	PREPARER		9/26/12
ALL THREAD DEPTH CALLOUTS ARE TO BE CONSIDERED AS A MIN. DEPTH OF PERFECT THREADS	CHECKER		9-26-12
	PROJECT MANAGER		9/26/12
ALL DIMENSIONS ARE IN INCHES	ENGINEERING		9/26/12
MACHINED SURFACES SHALL BE $\sqrt{}$ OR BETTER	LICENSING		9/27/12
NEXT ASSEMBLY 315-40-170	QUALITY		9/27/12
DRAWING TYPE LICENSE			

NAC INTERNATIONAL

BASKET SPACER, NRU/NRX

PROJECT	DRAWING	REV
315-40	174	0
SCALE N. T. S. / WEIGHT N/A	SH 1 OF 1	8/23/2012

R-220304

Security-Related Information
Figure Withheld Under CFR 2.390

UNLESS OTHERWISE STATED	GROUP	NAME	DATE
DIMENSIONING AND TOLERANCING SHALL BE PER ASME Y14.5M-94.	PREPARER		10/19/12
ALL THREAD DEPTH CALLOUTS ARE TO BE CONSIDERED AS A MIN. DEPTH OF PERFECT TREADS	CHECKER		10-19-12
	PROJECT MANAGER		10/19/12
	ENGINEERING		10/19/12
ALL DIMENSIONS ARE IN INCHES	LICENSING		10/20/12
MACHINED SURFACES SHALL BE 125 OR BETTER	QUALITY		10.22.12
NEXT ASSEMBLY 315-40-170			
DRAWING TYPE LICENSE			

NAC INTERNATIONAL

CADDY ASSEMBLY, NRU/NRX

PROJECT	DRAWING	REV
315-40	175	1

SCALE	WEIGHT	SH	OF	
N. T. S.	N/A	1	1	10/10/2012

R-220695

REV	CHANGE
0	INITIAL ISSUE

"NAC PROPRIETARY INFORMATION
WITHHELD PER 10 CFR 2.390"

ASSY	ASSY	ASSY
QUANTITY		

UNLESS OTHERWISE STATED
DIMENSIONING AND TOLERANCING SHALL BE PER ASME Y14.5M 94.
ALL THREAD DEPTH CALLOUTS ARE TO BE CONSIDERED AS A MIN DEPTH OF PERFECT TREADS

ALL DIMENSIONS ARE IN INCHES
MACHINED SURFACES SHALL BE 125 RMS
NEXT ASSEMBLY: N/A
DRAWING TYPE: LICENSE

GROUP	NAME	DATE
PREPARER	V Sitty Lunau	12-17-12
CHECKER	[signature]	12-17-12
PROJECT MANAGER	[signature]	12-17-12
ENGINEERING	[signature]	12/17/12
LICENSING	[signature]	12/17/12
QUALITY	Ray V. Bass	12/18/12

NAC INTERNATIONAL

LWT TRANSPORT CASK ASSEMBLY, HEUNL CONTENTS

PROJECT	DRAWING	REV
315-40	180	ONP

SCALE N.T.S | WEIGHT N/A | SH 1 OF 1 | 12/7/2012

R-220697

REV	CHANGE
0	INITIAL ISSUE

"NAC PROPRIETARY INFORMATION
WITHHELD PER 10 CFR 2.390"

ASSY	ASSY	ASSY
QUANTITY		

UNLESS OTHERWISE STATED
DIMENSIONING AND TOLERANCING SHALL BE PER ASME Y14.5M.
ALL THREAD DEPTH CALLOUTS ARE TO BE CONSIDERED AS A MIN DEPTH OF PERFECT TREADS

ALL DIMENSIONS ARE IN INCHES
MACHINED SURFACES SHALL BE 250 OR BETTER

NEXT ASSEMBLY: 315-40-180
DRAWING TYPE: LICENSE

GROUP	NAME	DATE
PREPARER	[signature]	12-17-12
CHECKER	[signature]	12-17-12
PROJECT MANAGER	[signature]	12-17-12
ENGINEERING	[signature]	12/17/12
LICENSING	[signature]	12/17/12
QUALITY	[signature]	12-18-12

NAC INTERNATIONAL

CONTAINER ASSEMBLY, HEUNL

PROJECT 315-40 | DRAWING 181 | REV 0NP
SCALE N. T. S | WEIGHT N/A | SH 1 OF 1 | 12/7/2012

R-220699

REV	CHANGE
0	INITIAL ISSUE

"NAC PROPRIETARY INFORMATION
WITHHELD PER 10 CFR 2.390"

ASSY	ASSY	ASSY
QUANTITY		

UNLESS OTHERWISE STATED
DIMENSIONING AND TOLERANCING SHALL BE PER ASME Y14.5M-94
ALL THREAD DEPTH CALLOUTS ARE TO BE CONSIDERED AS A MIN. DEPTH OF PERFECT TREADS
ALL DIMENSIONS ARE IN INCHES
MACHINED SURFACES SHALL BE ✓ OR BETTER
NEXT ASSEMBLY: 315-40-180
DRAWING TYPE: LICENSE

GROUP	NAME	DATE
PREPARER	[signature]	12-17-12
CHECKER	[signature]	12-17-12
PROJECT MANAGER	[signature]	12-17-12
ENGINEERING	[signature]	12/17/12
LICENSING	[signature]	12/17/12
QUALITY	Roy W. Barr	12/18/12

NAC INTERNATIONAL

CONTAINER SPACER, HEUNL

PROJECT	DRAWING	REV
315-40	182	UNP

SCALE N. T. S | WEIGHT N/A | SH 1 OF 1 | 12/6/2012

R-220701

REV	CHANGE
0	INITIAL ISSUE

"NAC PROPRIETARY INFORMATION
WITHHELD PER 10 CFR 2.390"

ASSY	ASSY	ASSY
QUANTITY		

UNLESS OTHERWISE STATED
DIMENSIONING AND TOLERANCING SHALL BE PER ASME Y14.5M-94.
ALL THREAD DEPTH CALLOUTS ARE TO BE CONSIDERED AS A MIN. DEPTH OF PERFECT TREADS
ALL DIMENSIONS ARE IN INCHES
MACHINED SURFACES SHALL BE √63 OR BETTER
NEXT ASSEMBLY: 315-40-180
DRAWING TYPE: LICENSE

GROUP	NAME	DATE
PREPARER	[signature]	12-17-12
CHECKER	[signature]	12-17-12
PROJECT MANAGER	[signature]	12-17-12
ENGINEERING	[signature]	12/18/12
LICENSING	[signature]	12/17/12
QUALITY	[signature]	12/18/12

NAC INTERNATIONAL

CONTAINER GUIDE, HEUNL

PROJECT	DRAWING	REV
315-40	183	UNP
SCALE N. T. S. / WEIGHT N/A	SH 1 OF 1	12/7/2012

Security-Related Information
Figure Withheld Under CFR 2.390

ASSY	ASSY	ASSY
QUANTITY		

UNLESS OTHERWISE STATED
DIMENSIONING AND TOLERANCING SHALL BE PER ASME Y14.5M-94.
ALL THREAD DEPTH CALLOUTS ARE TO BE CONSIDERED AS A MIN DEPTH OF PERFECT THREADS
ALL DIMENSIONS ARE IN INCHES
MACHINED SURFACES SHALL BE 125 OR BETTER
NEXT ASSEMBLY: N/A
DRAWING TYPE: LICENSE

GROUP	NAME	DATE
PREPARER	[signature]	1-28-15
CHECKER	[signature]	1-28-15
PROJECT MANAGER	[signature]	1-28-15
ENGINEERING	[signature]	1-28-15
LICENSING	[signature]	1/28/15
QUALITY	Roy W. Bass	2-2-15

NAC INTERNATIONAL

LWT TRANSPORT CASK ASSEMBLY, SLOWPOKE CONTENTS

PROJECT	DRAWING	REV
315-40	185	0

SCALE	WEIGHT	SH	OF	
N. T. S.	N/A	1	1	1/12/2015

R-228706

Security-Related Information
Figure Withheld Under CFR 2.390

	6		11	THREADED INSERT	ST. STL.	COML		
	7		10	MESH	ST. STL.	COML		
	7		9	MESH RETAINER	304 ST. STL.	ASTM A240/A276/A269		PLATE/BAR/TUBE
	2		8	GUIDE PIN	304 ST. STL.	ASTM A276		BAR
	4		7	GUIDE BAR	304 ST. STL.	ASTM A276		BAR
	1		6	INTERMEDIATE DISK	304 ST. STL.	ASME SA240/SA276		PLATE/BAR
	1		5	TOP DISK	304 ST. STL.	ASME SA240/SA276		PLATE/BAR
2	1		4	SHELL	304 ST. STL.	ASME SA249/SA312		TUBE/PIPE
	1		3	BASE PLATE	304 ST. STL.	ASME SA240/SA276		PLATE/BAR
		1	2	BASKET WELDMENT			315-40-186-98	
		1	1	BASKET LID ASSEMBLY			315-40-187-99	
97	98	99	ITEM	NAME	MATERIAL	SPEC	DRAWING No.	DESCRIPTION
ASSY	ASSY	ASSY						
QUANTITY								

NAC INTERNATIONAL

UNLESS OTHERWISE STATED
DIMENSIONING AND TOLERANCING SHALL BE PER ASME Y14.5M-1994
ALL THREAD DEPTH CALLOUTS ARE TO BE CONSIDERED AS A MIN. DEPTH OF PERFECT THREADS
ALL DIMENSIONS ARE IN INCHES
MACHINED SURFACES SHALL BE 125 RMS OR BETTER
NEXT ASSEMBLY 315-40-185
DRAWING TYPE LICENSE

GROUP	NAME	DATE
PREPARER	Vestyelman	6-12-15
CHECKER		6-12-15
PROJECT MANAGER		6-12-15
ENGINEERING		6-12-15
LICENSING		6/15/15
QUALITY		6-15-15

FUEL CORE BASKET ASSEMBLY, SLOWPOKE

PROJECT	DRAWING	REV
315-40	186	2
SCALE N. T. S.	WEIGHT N/A	SH 1 OF 2
		6/11/2015

Security-Related Information
Figure Withheld Under CFR 2.390

NAC INTERNATIONAL

FUEL CORE BASKET
ASSEMBLY,
SLOWPOKE

PROJECT	315-40	DRAWING	186	REV 2
SCALE N. T. S.	WEIGHT AS NOTED	SH 2 OF 2	6/11/2015	

R-228708

Security-Related Information
Figure Withheld Under CFR 2.390

ASSY	ASSY	ASSY
QUANTITY		

UNLESS OTHERWISE STATED
DIMENSIONING AND TOLERANCING SHALL BE PER ASME Y14.5M-94.
ALL THREAD DEPTH CALLOUTS ARE TO BE CONSIDERED AS A MIN. DEPTH OF PERFECT THREADS
ALL DIMENSIONS ARE IN INCHES
MACHINED SURFACES SHALL BE √ OR BETTER
NEXT ASSEMBLY 315-40-186
DRAWING TYPE LICENSE

GROUP	NAME	DATE
PREPARER		6-12-15
CHECKER		6-12-15
PROJECT MANAGER		6-12-15
ENGINEERING		6-12-15
LICENSING		6/15/15
QUALITY		6-15-15

NAC INTERNATIONAL

BASKET LID ASSEMBLY, SLOWPOKE

PROJECT	DRAWING	REV
315-40	187	1

SCALE N. T. S. | WEIGHT N/A | SH 1 OF 2 | 6/11/2015

Security-Related Information
Figure Withheld Under CFR 2.390

NAC INTERNATIONAL

BASKET LID ASSEMBLY, SLOWPOKE

PROJECT	DRAWING	REV
315-40	187	1
SCALE N. T. S.	WEIGHT AS NOTED	SH 2 OF 2	6/11/2015

1.5 Unclassified DOE Reference Documents and Drawings

The unclassified DOE reference documents and drawings are contained in the following appendices.

- Appendix 1-A – TTQP-1-015, "Description of the Tritium-Producing Burnable Absorber Rod for the Commercial Light Water Reactor," Revision 14
- Appendix 1-B – TTQP-1-091, "Unclassified TPBAR Releases, Including Tritium," Revision 11
- Appendix 1-C – TTQP-1-111, "Unclassified Bounding Source Term, Radionuclide Concentrations, Decay Heat, and Dose Rates for the Production TPBAR," Revision 5
- Appendix 1-D – DOE Drawing H-3-307845, "Production TPBAR Reactor Interface Dimensions Watts Bar," Revision 10, Sheet 1 of 2
- Appendix 1-E – DOE Drawing H-3-308875, "Production TPBAR Reactor Interface Dimensions Sequoyah," Revision 5, Sheet 1 of 2
- Appendix 1-F – DOE Drawing H-3-310568, "Mark 8 Multi-Pencil TPBAR – Watts Bar Reactor Interface," Revision 0, Sheet 1 of 2
- Appendix 1-G – PNNL Letter, TTP-06-056, Subject: Exposure of Shipping Casks to Tritium, February 21, 2006

APPENDIX 1-A

TTQP-1-015, "Description of the Tritium-Producing Burnable Absorber Rod for the Commercial Light Water Reactor," Revision 14

LIMITED DISTRIBUTION
COPY NO. 00003

R-204392

TRITIUM TECHNOLOGY PROGRAM

DESCRIPTION OF THE TRITIUM-PRODUCING BURNABLE ABSORBER ROD FOR THE COMMERCIAL LIGHT WATER REACTOR

TTQP-1-015

Revision 14

Effective Date: 3/10/06

TRITIUM TECHNOLOGY PROGRAM

DESCRIPTION OF THE TRITIUM-PRODUCING BURNABLE ABSORBER ROD FOR THE COMMERCIAL LIGHT WATER REACTOR

Revision 14

Major formatting revision; no revision marks

Prepared By:	D.D. Lanning, Author	2/27/06 Date
Concurrence:	R.O. Gates, Independent Reviewer	2/28/06 Date
Concurrence:	Authorized Derivative Classifier	3/2/06 Date
Approved By:	T. M. Brewer, Quality Engineer	3-3-06 Date
Approved By:	B.D. Reid, Design Task Manager	3/6/06 Date
Approved By:	C.K. Thornhill, TTP Project Manager	3/8/06 Date

1.0 ABSTRACT

Tritium-producing burnable absorber rods (TPBARs) used in the U.S. Department of Energy's Tritium Readiness Program are designed to produce tritium when placed in a Westinghouse or Framatome 17x17 fuel assembly and irradiated in a pressurized water reactor (PWR). This document provides an unclassified description of the design baseline for the TPBARs. This design baseline is currently valid only for Watts Bar reactor production cores.

2.0 DESIGN BASIS DOCUMENTS

The TPBAR design basis for the Watts Bar reactor production cores consists of this unclassified design basis description plus a collection of design basis documents. The design basis documents include the design drawings, the design specifications, and the component acceptance test requirements. These documents are listed in Appendices A, B, and C, respectively.

3.0 GENERAL FUNCTIONS AND REQUIREMENTS

TPBARs are similar in size and nuclear characteristics to standard, commercial PWR, stainless-steel-clad burnable absorber rods. The exterior of the TPBAR is a stainless-steel tube, approximately 152 inches from tip to tip at room temperature. The nominal outer diameter of the stainless-steel cladding is 0.381 inches. The internal components have been designed and selected to produce and retain tritium.

Figure 1 illustrates the concentric, cylindrical, internal components of a TPBAR. Within the stainless-steel cladding is a metal getter tube that encircles a stack of annular, ceramic pellets of lithium aluminate. The pellets are enriched with the ^{6}Li isotope. When irradiated in a PWR, the ^{6}Li pellets absorb neutrons, simulating the nuclear characteristics of a burnable absorber rod, and produce tritium, a hydrogen isotope. The tritium chemically reacts with the metal getter, which captures the tritium as a metal hydride.

To meet design limitations on rod internal pressure and burn-up of the lithium pellets, the amount of tritium production per TPBAR is limited to a maximum of 1.2 grams over the full design life of the rod (approximately 550 equivalent full-power days). The potential release rate of tritium into the reactor coolant is subject to a design limit that is consistent with the plant tritium release limits from the plant licensing basis. This is achieved by the combined effects of the metal getter tube surrounding the lithium aluminate pellets and an aluminide barrier coating on the inner surface of the cladding.

4.0 TPBAR COMPONENTS

The TPBAR cladding is double-vacuum-melted, Type 316 stainless steel. To prevent hydrogen from diffusing inward from the coolant to the TPBAR getter and to prevent

tritium from diffusing outward from the TPBAR to the reactor coolant, an aluminide coating is on the inner surface of the cladding. This coating barrier must remain effective during fabrication, handling, and in-reactor operations.

The annular ceramic pellets are composed of sintered, high-density, lithium aluminate ($LiAlO_2$).

The metal getter tube located between the cladding and the lithium aluminate pellets is composed of nickel-plated Zircaloy-4. The getter absorbs the molecular tritium (T_2) generated during irradiation. Nickel plating is used on both sides of the getter to prevent oxidation of the Zircaloy-4 surfaces, which would reduce the tritium absorption rate. Consequently, this plating must remain effective during fabrication, handling, and in-reactor operations.

One or more unplated Zircaloy-4 tube(s) line the inside of the annular pellets. This component is called the "liner." (In the Mark 8 design these include the liner and the cracking flange). Because the tritium produced in the pellets is mainly released as oxidized molecules (T_2O), a reactive metal liner is needed to reduce these species to molecular tritium by reacting with the oxygen. The liner also provides mechanical support to prevent axial movement of pellet material in case any pellets crack during TPBAR handling or operation.

5.0 PREVIOUS PRODUCTION TPBAR DESIGNS

In this section, two previous TPBAR designs are described: the production TPBAR design, in which the pellet column and getter tubes are segmented into sections called "pencils"; and the production full-length getter TPBAR design, in which the getter tube runs the full length of the TPBAR. These designs are augmented by added features in the Mark 8 TPBAR design, described in Section 6.0.

5.1 Production TPBAR Design (Irradiated in Watts Bar Cycles 6 and 7)

The getter tube is cut and rolled over (coined) to capture the liner and pellets within an assembly called a "pencil." There are a total of 11 pencil assemblies stacked within the cladding tube of each TPBAR (see Figure 2.) The majority of the pencils are of standard length (approximately 12 inches). Two of the pencils are of variable length.

To minimize the impact of power peaking in adjacent fuel rods resulting from the axial gaps between the stacked pencils, there is more than one type of TPBAR. The types are differentiated by where the variable-length pencils are loaded within the pencil stack. The loading sequence of the pencils is tracked, and each TPBAR is identified by type so that the location of each TPBAR type within a TPBAR assembly can be specified.

5.2 Production Full-Length Getter TPBAR Design Option

The axial arrangement of components is altered for the production full-length getter TPBAR design option. In this design, a single getter tube runs the full length of the TPBAR, and surrounds both the pellet column and the upper and lower spacer tubes (see Figure 3). The spacer tubes at the top and bottom of the pellet column are nickel-plated Zircaloy getters. The Zircaloy liner tubes and lithium aluminate pellet stacks in the full-length getter design are longer than in the standard design: typically approximately 16 inches compared to approximately 12 inches in the standard design.

The use of the production full-length getter design eliminates the need for variable-length pencils and different TBPAR types to minimize the impact of power peaking in adjacent fuel rods resulting from axial gaps between pencils. The pellet column in the production full-length getter TPBAR design is essentially continuous, and there is no power peaking penalty from axial gaps in the absorber column.

5.3 Common TPBAR Design Features

For hermetic closure of the TPBARs, end plugs similar to those used in commercial PWR burnable absorber rods are welded to each end of the cladding tube. As shown in Figures 2 and 3, a gas plenum space is located above the top of the absorber column and below the top end plug. A spring clip in this plenum space holds the internals in place during pre-irradiation handling and shipping. Depending on the design, either a top plenum getter tube or a spacer tube is placed in the plenum space to getter additional tritium.

The length of the column of enriched lithium aluminate must be variable to provide optimal flexibility in reactor core design. Consequently, the column of enriched lithium aluminate pellets is approximately centered axially about the core mid-plane elevation, but ranges in total length from about 126 to 132 inches. A thick-walled, nickel-plated, Zircaloy-4 spacer tube is placed between the bottom of the absorber column and the bottom end plug both to support the absorber column and to getter tritium.

6.0 THE MARK 8 DESIGN

The Mark 8 multi-pencil design corresponds with the production TPBAR designs described in Section 5.0 above, with the following changes and additions:

- Each pencil contains an added short flanged Zircaloy tube, called a "cracking flange", which interfaces with the inner liner at the top of the pencil, as shown in Figure 4. In the multi-pencil design, the pencil getter tube is coined to capture the pellet column

and the inner liner, as in the production TPBAR design; and the flange on the cracking flange similarly lies below and is captured by the coined-over getter on the top of the pencil.

- The pellet stack within each standard length pencil will consist of 13 pellets each approximately 1 inches long, instead of 6 pellets each approximately 2 inches long as in previous designs. However, the overall pellet stack length remains unchanged. The pellets within variable length pencils will similarly be slightly less than 1 inch in length.
- The upper and lower plenums in the multi-pencil design each contain "spacer assemblies" consisting of an outer NPZ getter tube (the "plenum getter") and an NPZ spacer tube within this outer getter tube (the "spacer getter").
- The upper spacer assembly contains two sections of NPZ spacer getter tube. The upper portion of the assembly contains an NPZ spacer getter tube only. The lower portion of the assembly contains in addition a Zircaloy "spacer liner tube" inside the lower section of the spacer getter tube (Figure 4). The spacer liner tube is flanged at its top end, and this flange separates the upper and lower sections of the spacer getter tube.
- The bottom spacer assembly in the multi-pencil design includes an outer NPZ getter tube and within that an NPZ lower spacer getter tube. A flanged spacer liner tube is inserted into the top of the lower spacer assembly. The outer NPZ getter tube is coined to capture both the lower spacer getter tube and the spacer liner (Figure 4).
- The top end plug design has been altered to include a hex- shaped shank on the upper body, and the neck-down region of the end plug has been removed. In addition, the diameter of the bored out region has been reduced and the length of the end plug insert has been reduced.
- The bored out region in the bottom end plug is removed, the length of the end plug insert has been reduced, and an NPZ getter disk resides on the insert of the bottom end plug (Figure 4).

7.0 TPBAR ASSEMBLIES

A TPBAR assembly is shown in Figure 5. It should be noted, however, that a typical design used in a 17x17 fuel assembly would be 20 TPBARs, rather than the eight illustrated in Figure 5 Compatibility with alternate fuel assembly designs can be accommodated by changes to the TPBAR lengths and end plugs.

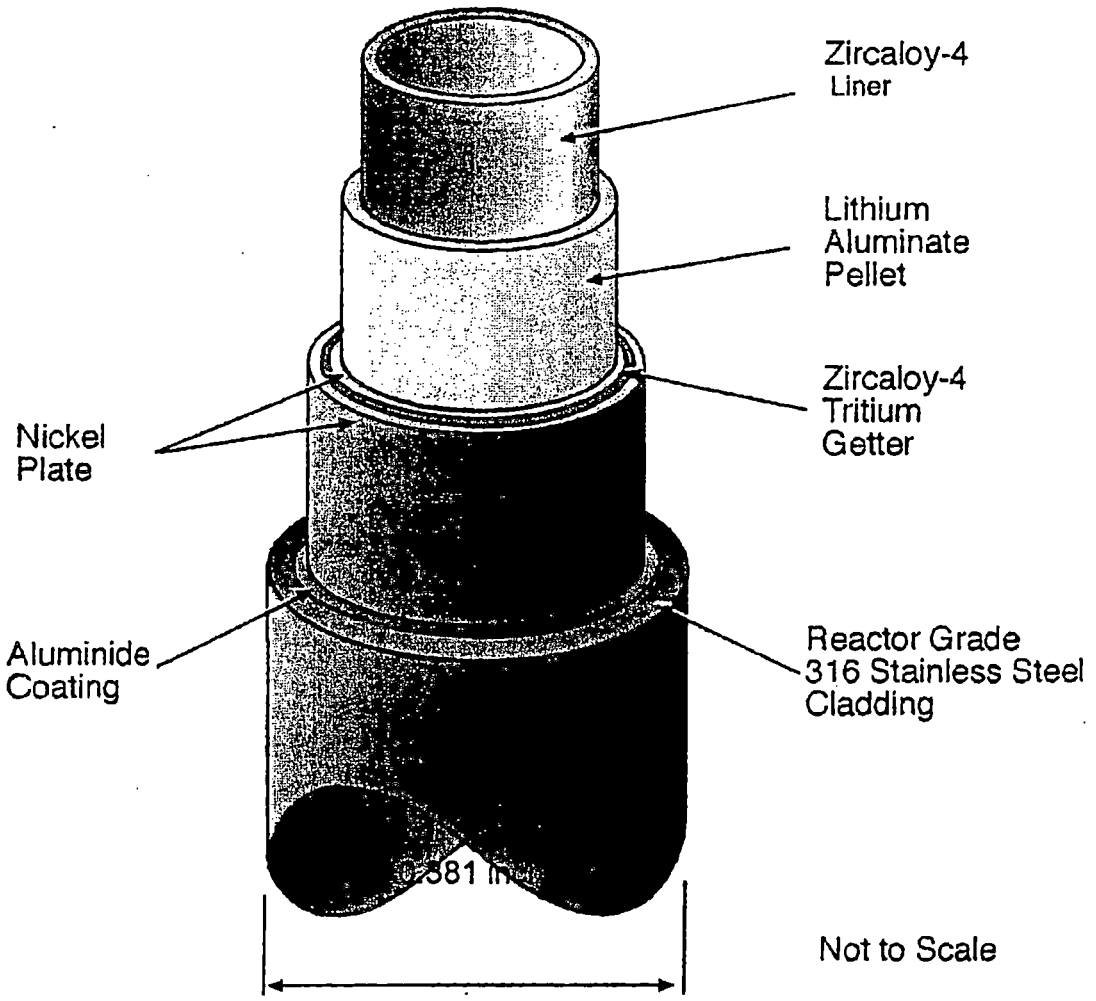

Figure 1. Isometric Section of a Tritium-Producing Burnable Absorber Rod

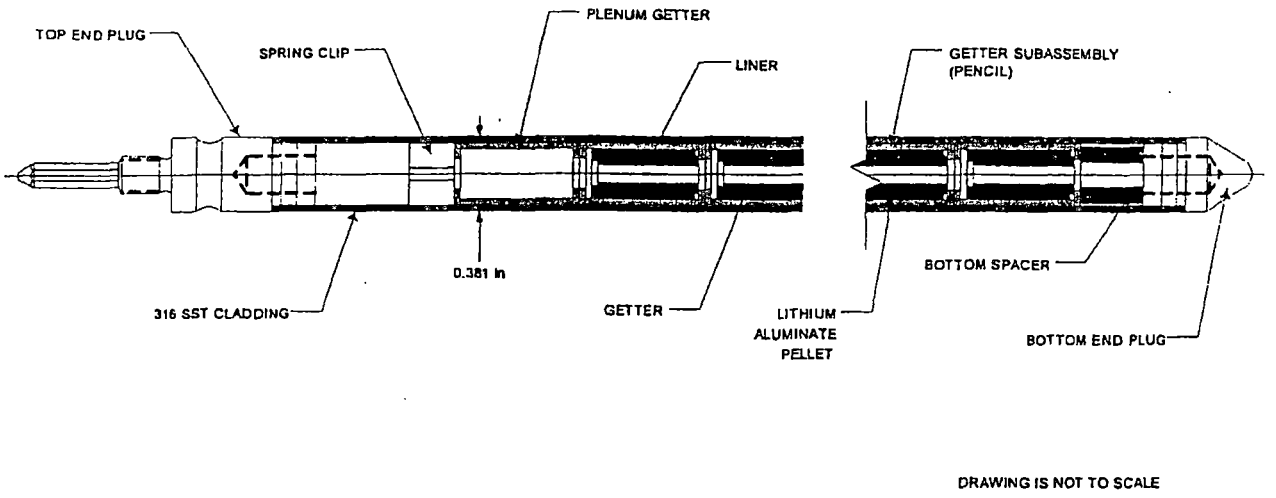

Figure 2. Axial Layout of TPBAR Internal Components –Production Standard Design

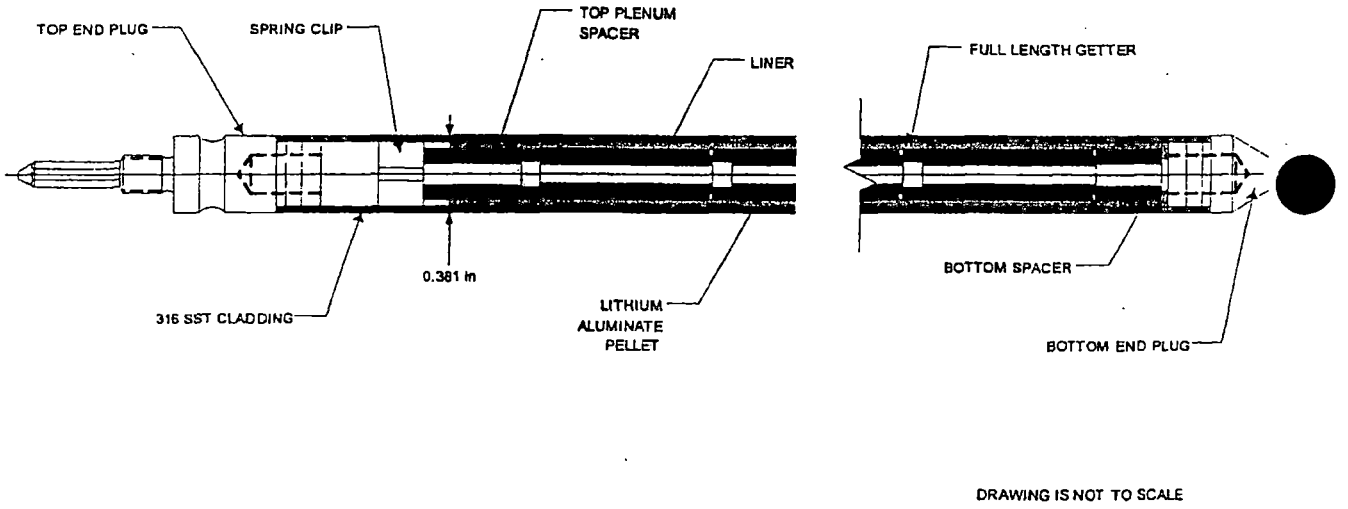

Figure 3. Axial Layout of TPBAR Internal Components –Production Full-Length Getter Design

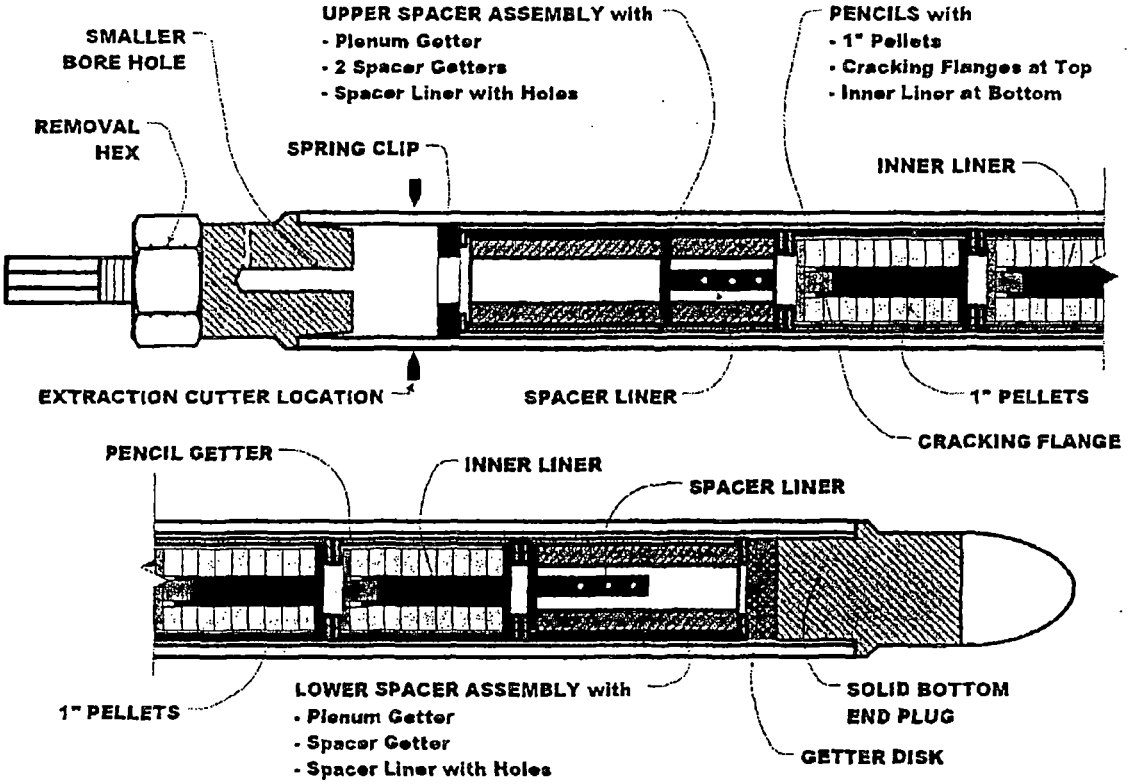

Figure 4 Axial Layout of Internal Components – Mark 8 Multi Pencil Design

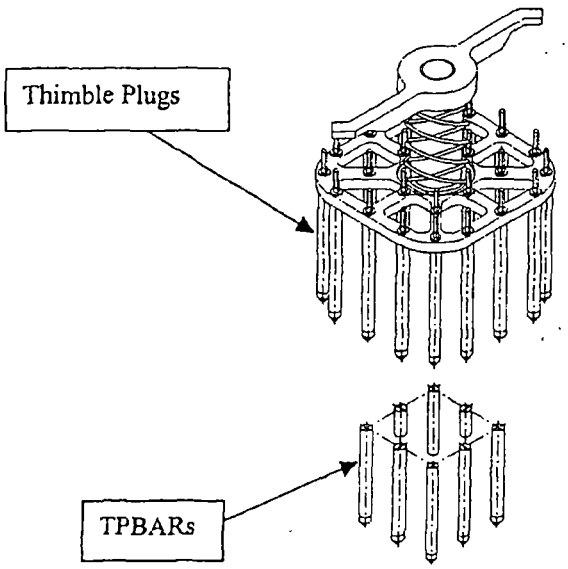

Figure 5 Typical TPBAR Assembly

APPENDIX A: LIST OF DESIGN DRAWINGS

Table A.1. List of Design Drawings for Standard Production TPBAR Design

Drawings are compiled in the latest revision of PNNL-TTQP-1-720, *Design Drawings for the Production TPBAR.*

Drawing	Title (Note: "U" designates an unclassified title.)	Classification
H-3-307843 Sheets 1 to 8	Production TPBAR Assembly Watts Bar (U)	Classified Sheet 2 is Unclassified
H-3-308874 Sheets 1 to 8	Production TPBAR Sequoyah (U)	Classified Sheet 2 is Unclassified
H-3-307844	Production Design Drawing List	Unclassified
H-3-307845 Sheets 1 and 2	Production TPBAR Interface Dimensions Watts Bar	Sheet 1 Unclassified Sheet 2 Classified
H-3-308875 Sheets 1 and 2	Production TPBAR Interface Dimensions Sequoyah	Sheet 1 Unclassified Sheet 2 Classified
H-3-307846	Production Cladding Tube	Unclassified
H-3-307847	Production Coated Cladding Tube (U)	Classified
H-3-307848 Sheets 1 and 2	Production Trimmed Coated Cladding Tube with End Prep (U)	Classified
H-3-307849	Production Standard Pencil Assembly (U)	Classified
H-3-307850	Production Variable Length Pencil Assembly (U)	Classified
H-3-307851 Sheets 1 and 2	Production Bottom Spacer (U)	Classified
H-3-307852	Production Top Plenum Spacer (U)	Classified
H-3-307853	Production Standard Pellet Stack	Unclassified
H-3-307854	Production Variable Length Pellet Stack	Unclassified
H-3-307855	Production Getter Tube Stock	Unclassified
H-3-307856 Sheets 1 and 2	Production Plated Getter Tube (U)	Classified
H-3-307857	Production Standard Inner Liner Tube	Unclassified
H-3-307858	Production Variable Length Inner Liner Tube	Unclassified
H-3-307859	Production Bottom Spacer Tube Stock	Unclassified
H-3-307860 Sheets 1 to 3	Production Top End Plug	Unclassified
H-3-307861 Sheets 1 and 2	Production Bottom End Plug	Unclassified
H-3-307862	Production Spring Clip	Unclassified
H-3-307325	Production Coated Cladding Bottom End Plug Assembly (U)	Classified
H-3-307326	Production Coated Cladding Bottom End Plug Assembly With End Prep (U)	Classified
H-3-309517	Activation Heat Treatment Profiles (U)	Classified
Full-Length Parts Needed FOR Multi-Pencil TPBAR Design (See PNNL-TTQP-1-769)		
H-3-307317	Spring Clip	Unclassified
H-3-310191 Sheets 1 to 3	Top End Plug	Unclassified
H-3-310192 Sheets 1 and 2	Bottom End Plug	Unclassified

Table A.2. List of Design Drawings for Production Full-Length Getter TPBAR Design

Drawings are compiled in the latest revision of PNNL-TTQP-1-769, *Production Full-Length Getter TPBAR Design Drawings (U)*

Drawing	Title (Note: "U" designates an unclassified title.)	Classification
H-3-307310 Sheets 1 to 6	Production Full-Length Getter TPBAR - Watts Bar (U)	Classified Sheet 2 is Unclassified
H-3-307311 Sheets 1 to 6	Production Full-Length Getter TPBAR - Sequoyah (U)	Classified Sheet 2 is Unclassified
H-3-307312 Sheets 1 to 4	Full-Length Getter TPBAR Interface Dimensions	Sheets 1 and 3 Unclassified Sheet 2 and 4 Classified
H-3-307313	Reserved for future use	
H-3-307314	Full-Length Getter Spacer Stock	Unclassified
H-3-307315	Full-Length Getter Plated Spacer (U)	Classified
H-3-307316	Full-Length Getter Finished Bottom Spacer (U)	Classified
H-3-307317	Spring Clip	Unclassified
H-3-307318	Reserved for future use	---
H-3-307319	Full-Length Getter Finished Top Plenum Spacer (U)	Classified
H-3-307320	Full-Length Getter Pellet Stack	Unclassified
H-3-307321	Full-Length Getter Inner Liner Tube	Unclassified
H-3-307322	Full-Length Getter Tube Stock	Unclassified
H-3-307323 Sheets 1 and 2	Full-Length Getter Plated Getter Tube (U)	Classified
H-3-307324	Production Full-Length Getter TPBAR Design Drawing List	Unclassified
H-3-307327	Activation Heat Treatment Profiles for Spacers (U)	Classified
H-3-310191 Sheets 1 to 3	Top End Plug	Unclassified
H-310192 Sheets 1 and 2	Bottom End Plug	Unclassified
Production Parts Needed for Full-Length Getter TPBAR Design (See PNNL-TTQP-1-720)		
H-3-307325	Production Coated Cladding Bottom End Plug Assembly (U)	Classified
H-3-307326	Production Coated Cladding Bottom End Plug Assembly With End Prep (U)	Classified
H-3-307846	Production Cladding Tube	Unclassified
H-3-307847	Production Coated Cladding Tube (U)	Classified
H-3-307848 Sheets 1 and 2	Production Trimmed Coated Cladding Tube with End Prep (U)	Classified
H-3-307853	Production Standard Pellet Stack	Unclassified
H-3-307854	Production Variable Length Pellet Stack	Unclassified
H-3-307857	Production Standard Inner Liner Tube	Unclassified
H-3-307858	Production Variable Length Inner Liner Tube	Unclassified
H-3-307860 Sheets 1 to 3	Production Top End Plug	Unclassified
H-3-307861 Sheets 1 and 2	Production Bottom End Plug	Unclassified

Table A.3. List of Design Drawings for Mark 8 Multi-Pencil TPBAR Design

Drawings are compiled in the latest revision of PNNL-TTQP-1-976, *Mark 8 TPBAR Design Drawings.*

Drawing	Title (Note: "U" designates an unclassified title.)	Classification
H-3-310566	Mark 8 TPBAR Drawing List	Unclassified
H-3-310567 Sheets 1 to 6	Mark 8 TPBAR Multi-Pencil Watts Bar (U)	Classified Sheet 2 is Unclassified
H-3-310568 Sheets 1 and 2	Mark 8 TPBAR Multi Pencil –Reactor Interface Mark 8 TPBAR Multi-Pencil –Extraction Interface	Sheet 1 Unclassified Sheet 2 Classified
H-3-310571 Sheets 1 to 3	Top End Plug	Unclassified
H-3-310572 Sheets 1 and 2	Trimmed Cladding Tube with End Prep (U)	Classified
H-3-310573	Coated Cladding Bottom End Plug Assembly (U)	Classified
H-3-310574	Coated Cladding Bottom End Plug Assembly with End Prep (U)	Classified
H-3-310575	Upper Spacer Assembly (U)	Classified
H-3-310576	Spacer Getters (U)	Classified
H-3-310580	Pencil Assemblies – Cracking Flange (U)	Classified
H-3-310583	Lower Spacer Assembly (U)	Classified
H-3-310584	Getter Disk (U)	Classified
H-3-310585	Getter Disk Stock	Unclassified
H-3-310586 Sheets 1 and 2	Bottom End Plug	Unclassified
H-3-310587	Cracking Flange	Unclassified
H-3-310591	Spacer Liner	Unclassified
H-3-310593	Mark 8 Variable Pellet Stack	Unclassified
H-3-310594	Mark 8 Standard Pellet Stack	Unclassified
H-3-310595 Sheets 1 to 5	Mark 8 EM TPBAR	Classified Sheet 2 Unclassified
H-3-310596	Mark 8 EM Pencil Assemblies (U)	Classified
H-3-310597	Mark 8 EM Beta Liner	Unclassified
H-3-310598	Mark 8 EM End Effect Pellet Stack	Unclassified

Table A.3. List of Design Drawings for Mark 8 Multi-Pencil TPBAR Design (continued)

Drawings listed below are reference drawings from PNNL-TTQP-1-720 and PNNL-1-769 (at the latest revision) for parts or items used in the Mark 8 design.

Drawing	Title (Note: "U" designates an unclassified title.)	Classification
H-3-307846	Production Cladding Tube	Unclassified
H-3-307847	Production Coated Cladding Tube (U)	Classified
H-3-307862	Production Spring Clip	Unclassified
H-3-307855	Production Getter Tube Stock	Unclassified
H-3-307856 Sheets 1 and 2	Production Plated Getter Tube (U)	Classified
H-3-307314	Full Length Getter Spacer Stock	Unclassified
H-3-307315	Full Length Getter Plated Spacer (U)	Classified
H-3-307853	Production Standard Pellet Stack	Unclassified
H-3-307854	Production Variable Length Pellet Stack	Unclassified
H-3-307857	Production Standard Inner Liner Tube	Unclassified
H-3-307858	Production Variable Length Inner Liner Tube	Unclassified
H-3-309517	Activation Heat Treatment Profiles (U)	Classified
H-3-307327	Activation Heat Treatment Profiles for Spacers (U)	Classified

APPENDIX B: LIST OF DESIGN SPECIFICATIONS (All at Latest Revision)

NOTE: "PNNL" prefix in the document number denotes a classified document, and "U" following the document title designates an unclassified title.

Document Number	Title
TTQP-1-072	*Production Specification for 316 Stainless Steel Seamless Cladding Tubes*
TTQP-1-073	*Manufacturing Specification for Production LWR Tritium Target Rod Getter Tube Stock*
TTQP-1-075	*Production Specification for LWR Tritium Target Rod Stainless Steel Bar Stock for Cladding*
TTQP-1-076	*Production Specification for Enriched Annular $LiAlO_2$ Pellets*
TTQP-1-077	*Production Specification for LWR Tritium Target Rod Bare Zircaloy Tube*
TTQP-1-079	*Production Specification for LWR Tritium Target Rod Top and Bottom End Plugs*
TTQP-1-080	*Production Specification for LWR Tritium Target Rod Top and Bottom End Plug Welding*
TTQP-1-083	*Production Specification for LWR Tritium Target Rod Stainless Steel Bar Stock for End Plugs*
TTQP-1-089	*Production Specification for LWR Tritium Target Rod Spring Clip*
TTQP-1-134	*Production Specification for Assembling TPBARs onto a Holddown Base Plate*
PNNL-TTQP-1-690	*Production Specification for LWR Tritium Target Rod Final Assembly (U)*
PNNL-TTP-1-1078	*Mark 8 Final Assembly Specification (U)*
PNNL-TTQP-1-692	*Specification for LWR Tritium Target Rod Inside Diameter Aluminide Barrier (U)*
PNNL-TTQP-1-826	*Final Product Specification for Production LWR Activated, Plated Getter Tubes (U)*
PNNL-TTQP-1-920	*Specification for Production LWR Full-Length Getter Tubes (U)*
PNNL-TTQP-1-941	*Production Specification for LWR Tritium Target Rod Final Assembly Using Full-Length Getters (U)*
PNNL-TTP-1-1073	*Specification for LWR TPBAR Getter Disks (U)*

APPENDIX C: COMPONENT ACCEPTANCE TEST REQUIREMENTS (ALL AT LATEST REVISION)

Note: "PNNL" prefix in the document number denotes a classified document, and "U" following the document title designates an unclassified title.

Document Number	Title
TTQP-1-081	*TPBAR Component Characteristics and Related Importance Factors*
TTQP-1-085	*Design Requirements for TTQP Weld Joint Burst Testing Matrix/Test Plan*
TTQP-1-129	*Qualification Requirements for Coated Cladding Bending*
PNNL-TTQP-1-829	*Standard Getter Rate Test Requirements (U)*
PNNL-TTQP-1-830	*Requirements for a Standard Cladding D_2 Permeation Test (U)*
PNNL-TTQP-1-867	*Test Plan for Target Rod Spring Clip (U)*

APPENDIX 1-B

TTQP-1-091, "Unclassified TPBAR Releases, Including Tritium," Revision 11

TRITIUM TECHNOLOGY PROGRAM

UNCLASSIFIED TPBAR RELEASES, INCLUDING TRITIUM

TTQP-1-091

Revision 11

Effective Date: 08/16/06

TRITIUM TECHNOLOGY PROGRAM

UNCLASSIFIED TPBAR RELEASES, INCLUDING TRITIUM

Revision 11

Prepared By:	D.D. Lanning **D.D. Lanning, Author**	8/15/06 **Date**
Reviewed By:	E.R. Gilbert **E.R. Gilbert, Independent Reviewer**	8/15/06 **Date**
Concurrence:	Ann Labahan **TTP Authorized Derivative Classifier**	8/16/06 **Date**
	JS Dukelow for TMB **T.M. Brewer, Quality Engineer**	8/15/06 **Date**
	Ann Labahan for BD Reid **B.D. Reid, Design Task Manager**	8/16/06 **Date**
Approval:	CK Thornhill **C.K. Thornhill, TTP Project Manager**	8/16/06 **Date**

1.0 INTRODUCTION

This document provides a complete listing of all unclassified tritium release values that should be assumed for unclassified analysis. Much of the information is brought forth from the related documents listed in Section 5.0 to provide a single-source listing of unclassified release values. Some information, however, is new or updated based on current design analysis and available experimental data.

This document provides unclassified information for a larger number of release scenarios than previously analyzed. This information is summarized in Tables 1, 2, and 3. In addition, a section is included to address lithium and aluminum release in the event of a 24-TPBAR breach in the spent fuel pool.

2.0 SUMMARY OF UNCLASSIFIED RELEASES, INCLUDING TRITIUM

All tritium-producing burnable absorber rod (TPBAR) analysis assumes a maximum of 1.2 grams of tritium per TPBAR will be generated during an 18-month operating cycle.

2.1 Intact TPBAR In-reactor Tritium Permeation

The in-reactor tritium permeation rate deduced from RCS tritium activity for the group of 240 TPBARs in Watts Bar Nuclear Cycle 6, averaged over a year extending to end-of-cycle, was 2.4 ± 1.8 Ci/TPBAR/year (95% confidence interval) (Lanning and Pagh, 2005). The 95% upper bound of 2.4 +1.8 = 4.2 Ci/TPBAR/year is recommended as the basis for assessing the tritium release from intact TPBARs.

2.2 In-reactor Tritium Release from a Failed TPBAR

The first scenario involves a TPBAR that may have a fabrication defect or may be damaged prior to insertion into the reactor for irradiation. In this case, 100 percent of the tritium generated in the TPBAR is assumed to be released to the reactor coolant as it is generated.

2.3 TPBAR Releases from Spent Fuel Pool Accidents

2.3.1 Spent Fuel Pool Tritium Concentration Limit

It has been determined that following the simultaneous breach of 24 TPBARs, the Tennessee Valley Authority take-action limit for tritium concentration in the spent fuel pool water will not be exceeded. The concentration limit is 60 microcuries per milliliter. The best estimate of total tritium release in this event is less than 25% of the TPBAR inventory. The release will not be instantaneous, but will occur

at a steady rate over a time period substantially greater than 8 hours. The rate will thus be less than 3% (of initial inventory) per hour.

2.3.2 Instantaneous Tritium Release per TPBAR

In particular, the instantaneous release of tritium from breached TPBARs in the spent fuel pool (as gas within the released gas from the TPBARs) will not exceed 0.001 Ci/TPBAR.

2.3.3 Lithium and Aluminum Release

In the event of a 24-TPBAR breach in the spent fuel, the following concentration limits for lithium and aluminum will not be exceeded:

- 400 ppb lithium
- 50 ppb aluminum.

2.4 Tritium Releases from TPBARs within Storage Canisters (<200°F)

The upper-bounding tritium partial pressure within storage canisters containing lead test assembly (LTA) TPBARs and sections is not expected to exceed 20 torr under nominal storage conditions (~86°F). The quoted bounding pressure for maximum temperatures (<200°F) is estimated by increasing this figure by the ratio of Kelvin temperatures, to 25 torr.

Tritium release from extracted TPBARs in storage will not exceed 1% of the declared post-extraction residual tritium (Clemmer et al. 1984; and Johnson et al. 1976).

In both cases, the form of the released tritium will be tritiated water vapor or condensate (HTO).

2.5 TPBAR Transportation Cask Event Releases

2.5.1 Intact TPBARs

2.5.1.1 For TPBAR temperatures ranging from ambient to less than 200°F, and for casks containing 1,200 or less TPBARs, the tritium release from the entire cask loading would be less than the regulatory requirement of 0.05 mCi per hour (10 CFR 71.51). The tritium would be released from the TPBARs in the form of molecular tritium gas (i.e., T_2 or HT).

2.5.1.2 For TPBAR temperatures ranging from 200°F to 650°F, the average tritium release would be less than 0.48 mCi per

TPBAR per hour based on the upper-bound in-reactor release rate of 4.2 Ci/TPBAR/year. The tritium would be released from the TPBARs in the form of tritium gas.

2.5.1.3 For TPBAR temperatures ranging from 650°F up to 1050°F (565°C), the tritium release should be considered to be an instantaneous release of less than 0.5 Ci per TPBAR per hour. Again, the tritium would be released from the TPBARs in the form of tritium gas.

The potential for TPBAR rupture was assessed at 1050°F because this is one of the temperature break-points in the Modal Study matrix cited earlier (Laity 1998). It was determined that the TPBARs are unlikely to rupture at temperatures less than 1050°F, but may rupture at higher temperatures.

2.5.1.4 Helium release from intact TPBARs is negligible.

2.5.2 Event-failed TPBARs

2.5.2.1 For TPBAR temperatures ranging from ambient to 200°F, the tritium release from a TPBAR whose cladding fails mechanically (e.g., due to impact forces) after cask loading should be considered to be less than 0.1 Ci per TPBAR per hour, not to exceed 1% of the tritium inventory in the lithium aluminate pellets. The release should be considered to be in the form of tritiated water and a very small fraction of methane.

2.5.2.2 For TPBAR temperatures ranging from 200°F to 650°F, the tritium release from a TPBAR whose cladding fails mechanically (e.g., due to impact forces) after cask loading should be considered to be less than 55 curies total due to desorption release. The release should be considered to be in the form of tritiated water and a very small fraction of methane.

2.5.2.3 For TPBAR temperatures ranging from 650°F to 1050°F, the tritium release should be considered to be up to 100% of the TPBAR tritium inventory, in the form of tritiated water and methane.

2.5.2.4 For TPBAR temperatures in excess of the T4 Modal Study break-point (1050°F), it should be assumed that 100 percent of

the tritium inventory of the TPBAR would be instantaneously released in the form of tritiated water and methane.

2.5.2.5 The helium inventory per TPBAR following shutdown and a 90-day cooling period is calculated to be 0.42 moles (total of He-4 from fill gas plus tritium production, plus residual He-3 and decay-generated He-3) [Pagh 2003]. The additional He-3 moles per TPBAR generated by tritium decay at any time "t" (years) following the cooldown can be calculated as:

$$He\text{-}3(moles) = 0.39\{1 - \exp[-\ln(2.0)t/12.33]\}.$$

It is recommended that 100% of all He-3 and He-4 be assumed to be released from event-failed TPBARs. This assumption may be significantly conservative for decay-generated He-3, since it is largely retained within the solid internal components of the TPBAR. However, a specific postirradiation temperature history for the TPBAR components would be required to calculate specific release fractions.

2.5.3 Pre-failed TPBARs

2.5.3.1 For pre-failed TPBARs at temperatures ranging from ambient to less than 200°F, the tritium release would be less than 0.1 Ci per TPBAR per hour. The release should be considered to be in the form of tritiated water and a very small quantity of methane. This rate applies to both rods breached in the dry condition and to rods which were breached in water (spent fuel pool drop) prior to cask loading, but which were dried after cask loading.

2.5.3.2 Without further definition of the cask environmental conditions and prefailed TPBAR conditions, it is assumed that the pre-failed TPBAR is waterlogged, and that consequently 100 percent of its tritium inventory would be released to the cask during transport when temperatures exceed 200°F. The tritium release will be in the form of tritiated water (i.e., T_2O and HTO) and, potentially, some tritiated methane. A further definition of the cask environment during transportation may permit a less-conservative tritium release estimate to be defined for some classes of pre-failed rods. To provide a more complete analysis of pre-failed rods, PNNL would need the following information: temperature range(s) for analysis; time period that TPBARs are in the temperature range(s)

(a time/temperature profile would be sufficient); and the maximum allowable quantity of tritium in the cask atmosphere.

3.0 FLAMMABLE GAS SOURCES

Because accident temperatures are not estimated to exceed 400°F, flammable gas generation for temperatures greater than that temperature are not considered here. The very limited tritium release from intact rods at temperatures <650°F have already been stated to be in the form of T_2 and HT.

Releases from event-failed rods at <200°F have been declared to be in the form of tritiated water and negligible methane fraction. Conversion of this water to T_2 or HT at such low temperatures is negligible.

Releases from event-failed rods at <650°F (i.e., 55Ci/TPBAR) have been declared to be in the form of T_2O and HTO. However, as a bounding estimate for flammable gas source, it will be assumed that 2% of this release will be converted to T_2 or HT from reaction with hot metal surfaces.

The pre-failed TPBARs are assumed to be waterlogged, for the purposes of estimating tritium release (Section 2.5.3.2 above). The potential for flammable hydrogen (H_2) gas formation from these rods is dependent upon actual conditions regarding water inventory, water release from the TPBARs, and water vapor reduction by hot metal surfaces. These conditions are not well defined. Hence, a bounding estimate of 0.15 moles per pre-failed TPBAR per year is made here, for temperatures between 200 and 400°F. This is calculated assuming 100% release of the potential 7.7 moles of water per TPBAR and a bounding conversion of 2% of this water to hydrogen gas (per year) from reaction with hot steel surfaces. Note that this is a very conservative (high) estimate, since anticipated cask internal temperatures are significantly less than 400°F. Below 200°F, hydrogen formation is considered negligible.

{These estimates do not include addition of hydrogen formed from radiolysis; however prior calculations indicate this would be less than 1% of available water per year, or less than 0.075 moles per pre-failed TPBAR per year.}

These bounding estimates for flammable gas formation are summarized in Table 4.

4.0 SHIPMENT OF TPBAR SEGMENTS AND FINES

Shipment of sectioned TPBARs plus cutting fines is planned. Such shipments will be bounded in content by up to 55 equivalent TPBAR lengths, with tritium content of the TPBARs less than the design limit of 1.2 grams tritium per TPBAR. The segments are expected to retain their internal components largely intact; however, impact loads during shipment could result in an undetermined extent of pellet cracking and further

fragmentation of pellet pieces. Conservatively, it is assumed that 100% of the tritium in the pellets is released during shipment. (It is noted that less than 40% of the tritium produced per TPBAR is contained in the pellets at the end of irradiation (Lanning et al. 2003.) This bounding assumption regarding tritium release from pellets is judged to include any in-shipment release of the residual tritium in the cutting fines.

The same declarations made in section 3.0 above apply to the shipment of TPBAR segments, regarding the expected form of the released tritium and the conversion to flammable species. That is, the expected forms of the released tritium are T_2O and HTO and the conversion to flammable species (T_2 and HT) is expected to be <2% per year, given cask temperatures less than 400°F.

Table 5 has been added to indicate the bounding quantities of released tritium and flammable gas generation for shipment of TPBAR segments as described above. As in Table 4, the flammable gas estimates do not include conversion due to radiolysis effects; but these are expected to be less than 1% of the available tritiated water vapor per year, or less than 0.044 moles per year.

5.0 RELATED DOCUMENTS

PNNL. 1997. *Report on the Evaluation of the Tritium Producing Burnable Absorber TPBAR Lead Test Assembly.* PNNL-11419, Revision 1, Pacific Northwest National Laboratory, Richland, Washington.

Letter. October 8, 1997. WW Laity (PNNL) to SM Sohinki (DOE), "CLWR: Tritium Permeation," Pacific Northwest National Laboratory, Richland, Washington.

Letter. June 3, 1998. WW Laity (PNNL) to SM Sohinki (DOE), "CLWR: Unclassified Tritium Releases for Transportation Casks," Pacific Northwest National Laboratory, Richland, Washington.

Letter. June 25, 1998. WW Laity (PNNL) to SM Sohinki (DOE), "CLWR: Unclassified Tritium Releases for Transportation Casks," Pacific Northwest National Laboratory, Richland, Washington.

Letter. November 30, 1998. WW Laity (PNNL) to SM Sohinki (DOE), "CLWR: Unclassified LTA TPBAR Tritium Releases for Transportation Casks," Pacific Northwest National Laboratory, Richland, Washington.

Letter. October 23, 2000. JS Chardos (Tennessee Valley Authority) to CK Thornhill (PNNL), "Verification of Design Inputs for Calculations of Breached TPBAR Leaching the Spent Fuel Pool," TVA Letter Number TVATP-00-068, Spring City, Tennessee.

Letter. July 1, 2002. CK Thornhill (PNNL) to D Duncan (ANL-W), *Tritium Pressure from Previously Breached TPBARs During Storage* (U), PNNL-TTQP-1-1937 (CRD), Pacific Northwest National Laboratory, Richland, Washington.

Clemmer, RG, PA Finn, RF Malecha, B Misra, MC Billone, DL Bowers, AK Fischer, LR Greenwood, RF Mattas, and SW Tam. 1984. *The TRIO Experiment*, ANL-84-55, Argonne National Laboratory, Argonne IL.

Johnson, AB, TJ Kabele, and WE Gurwell. 1976. *The Coproduct Program*, BNWL-2097, Pacific Northwest National Laboratory, Richland, Washington.

Lanning, DD. 2001. *Estimated Tritium Release from TPBARs in a Spent Fuel Storage Pool (U)*, PNNL-TTQP-1-722, Revision 6, Pacific Northwest National Laboratory, Richland, Washington.

Lanning, DD, ME Cunningham, DL Baldwin, and SE Marschman, 2003. *Results of Nondestructive and Destructive Examinations on the LTA TPBARs*, PNNL-TTQP-3-542, Revision 1, Pacific Northwest National Laboratory, Richland, Washington.

Lanning, DD. 2004. *TPBAR Tritium Releases* (U), PNNL-TTQP-1-735, Revision 7 (CRD), Pacific Northwest National Laboratory, Richland, Washington.

Lanning, DD, and RT Pagh, 2005. *Estimation of WBN Cycle 6 TPBAR Tritium Release from Analysis and Qualification of RCS Tritium Activity*, TTP-1-2064, Revision 0, Pacific Northwest National Laboratory, Richland, Washington.

Pagh, RT. 2003. *Release of Gas-Phase Components and Fines During Transportation Breach of Production TPBAR*, TTQP-1-2061, Revision 1, Pacific Northwest National Laboratory, Richland, Washington.

Table 1. Summary of Unclassified Tritium Release Assumptions for Non-Transportation Scenarios

In-Reactor Permeation	In-Reactor Release from Defective TPBARs	Spent Fuel Pool Accident Releases (<200°F)	Tritium Releases from TPBARs in Storage Canisters (<200°F)
Less than 0.48 mCi per TPBAR per hour	Released as it is generated	The Tennessee Valley Authority take-action limit of 60 microcuries per ml of spent fuel pool water will not be exceeded following the simultaneous breach of up to 24 TPBARs. The best estimate total tritium release in this event is less than 25% of the total TPBAR tritium inventory. The release rate will be < 3% (of initial inventory) per hour. The instantaneous release of tritium from breached TPBARs (as gas within the released gas from the TPBARs) will not exceed 0.001 Ci/TPBAR. The concentration of lithium and aluminum in the spent fuel pool following a 24-TPBAR breach will not exceed 400 ppb and 50 ppb, respectively.	Tritium partial pressure within storage canisters containing LTA TPBARs and sections will not exceed 25 torr. Tritium release from extracted TPBARs will not exceed 1% of the declared tritium residual.

Table 2. Summary of Unclassified Tritium Release Assumptions for Cask Transportation Scenarios

Intact TPBARs			Event-Failed TPBARs				TPBARs Pre-Failed In-Reactor	
<200°F	200°F to 650°F	650°F to 1050°F	Ambient to <200°F	200°F to 650°F	650°F to 1050°F	>1050°F	Ambient to <200°F	>200°F
< 0.05 mCi per hour for 1200 or less TPBARs	<0.48 mCi per TPBAR per hour (based on average TPBAR in the core)	<0.5 Ci per TPBAR per hour	<0.1 Ci per TPBAR per hour, not to exceed 1% of the pellet tritium inventory	<55 Ci total per TPBAR	<100% of inventory	100% of inventory	<0.1 Ci per TPBAR per hour	up to 100% of inventory

Table 3. Unclassified Helium Release Assumption for Cask Transportation Scenarios

TPBAR Condition	Helium Release to Cask
Intact	No release
Event-Failed	0.42 moles per TPBAR (following shutdown and 90-day cooling period), plus the decay-generated moles of He-3 at time t (years) following the cooldown, calculated as: He-3(moles) = 0.39{1 – exp[-ln(2.0)t/12.33]}

Table 4. Summary of Unclassified Bounding Flammable Gas Formation for Cask Transportation Scenarios (moles refer to moles H_2 equivalent)

Intact TPBARs		Event-Failed TPBARs		TPBARs Pre-Failed In-Reactor	
<200°F	200°F to 400°F	Ambient to <200°F	200°F to 400°F	Ambient to <200°F	200°F to 400°F
<7.1E-13 moles per TPBAR per hour	<<2.0E-9 moles per TPBAR per hour	Negligible moles per TPBAR	<1.9E-5 moles per TPBAR per year	Negligible moles total per TPBAR	<0.15 moles total per TPBAR per year

Table 5. Summary of Unclassified Bounding Tritium Release and Flammable Gas Formation for Cask Shipment of TPBAR Segments and Cutting Fines (up to 55 Equivalent TPBARs)

Tritium Releases		Flammable Gas Generation (moles refer to moles H_2 equivalent)	
<200°F	200°F to 400°F	Ambient to <200°F	200°F to 400°F
100% of Pellet inventory = < 26.4 grams	100% of Pellet inventory = < 26.4 grams	Negligible moles per TPBAR	< 0.088 moles per year

APPENDIX 1-C

TTQP-1-111, "Unclassified Bounding Source Term, Radionuclide Concentrations, Decay Heat, and Dose Rates for the Production TPBAR," Revision 5

VERIFIED DISTRIBUTION
COPY NO. 00009

R- 204306

TRITIUM TECHNOLOGY PROGRAM

UNCLASSIFIED BOUNDING SOURCE TERM, RADIONUCLIDE CONCENTRATIONS, DECAY HEAT, AND DOSE RATES FOR THE PRODUCTION TPBAR

TTQP-1-111

Revision 5

Effective Date: 12/14/05

TRITIUM TECHNOLOGY PROGRAM

UNCLASSIFIED BOUNDING SOURCE TERM, RADIONUCLIDE CONCENTRATIONS, DECAY HEAT, AND DOSE RATES FOR THE PRODUCTION TPBAR

Revision 5

Prepared By:	Richard J Pagh **R.T. Pagh, Senior Development Engineer**	12/13/05 **Date**
Reviewed By:	George H. Mennethen **Technical Reviewer**	12/13/05 **Date**
	for T Brewer **Quality Engineer**	12/13/05 **Date**
	BD Reid **Authorized Derivative Classifier**	12/13/05 **Date**
Approved By:	BD Reid **B.D. Reid, Design Task Manager**	12/13/05 **Date**
	CK Thornhill **C.K. Thornhill, TTP Project Manager**	12/14/05 **Date**

TTP Design Analysis Report	EDP: D01398-EDP03 Rev. 12 TTQP-1-112, Rev. 12
Title: Unclassified Bounding Source Term, Radionuclide Concentrations, Decay Heat, and Dose Rates for the Production TPBAR (U)	Number: TTQP-1-111 Revision: 5

Purpose and Description of Design Analysis: The constituents of a TPBAR become radioactive during irradiation in a reactor. This analysis will determine the unclassified bounding source term, radionuclide concentrations, decay heat, and dose rates of an irradiated production TPBAR and the hold-down assembly.

Changes to Previous Proven Designs or the Analysis of Previous Proven Designs: Inclusion of Appendix D containing trace radionuclide concentrations in TPBAR.

Unverified Assumptions and/or Unverified Inputs (including source identification if available): None

Method of Analysis: Radionuclide concentrations, decay heat, and source terms are estimated using ORIGEN2. Dose rates are estimated using MCNP.

Computer Codes used including Version and Computer Processor(s) or Model(s) Used: ORIGEN2 Version 2.1b, MCNP 4C, and Excel 97 on a Dell OptiPlex Gx1, Pentium II processor. ORIGEN2 Version 2.2 on a Dell Precision 650, Pentium IV processor.

Summary of Results: The primary calculated values are given in the body of this report. Complete results for TPBAR radionuclide concentrations, decay heat, and source terms are presented in Tables 3 through 5, respectively, for various decay times. Similar results for the hold-down assembly are presented in Tables 6-8, results for the thimble plug are given in Tables 9-11. Complete results for the dose rates for a TPBAR and hold-down assembly are presented in Tables 12 and 13, respectively. Axial power profile is shown in Figure 2. Material constituents are given in Appendix A. ORIGEN2 input is given in Appendix B. MCNP input is given in Appendix C. Trace radionuclide concentrations for the TPBAR are provided in Appendix D.

	Signature	Date
Responsible Engineer(s)	RT Pagh Richard T Pagh	12/13/05
Design Verifier(s)	George H. Meriothe	12/13/05
TTP ADC	BDReid	12/13/05
Quality Engineer	JS Dukelow for T Brewer	12/13/05
Design Task Manager	BDReid	12/13/05
Design Database Administrator (N/A for Revision 0)	Neil Marco	12/13/05

1.0 INTRODUCTION

During the tritium-producing burnable absorber rod (TPBAR) irradiation, the components of the TPBAR will become radioactive as a result of neutron capture. The irradiated TPBAR will emit a spectrum of photons from the radioactive decay of these activation products. This radioactive decay also generates decay heat in the TPBAR.

Unclassified bounding estimates of radionuclide concentrations, photon source term, and decay heat have been made for an irradiated production TPBAR and are presented in this calculation. These results bound irradiation of the production TPBAR in any anticipated host reactor. This information is needed to address waste classification, waste disposal, and transportation. Additionally, the source term is needed for dose-rate calculations. Dose rate calculations are performed for several representative configurations and are included in this calculation.

These calculations are performed for both the TPBAR (absorber, getter, liner, cladding, plenum, spring clip, and end plugs) and the hold-down assembly. This calculation bounds all TPBAR designs including the full-length getter design.

2.0 METHODOLOGY

2.1 ORIGEN2 Methodology

The radionuclide concentrations, source term, and decay heat of an irradiated TPBAR and hold-down assembly were estimated using the ORIGEN2 code (RSIC 1996). The ORIGEN family of codes has been used extensively in the past to estimate radionuclide inventories when measurements were not available. Input to ORIGEN2 consists primarily of the total masses of the constituent elements (including trace elements), the power density of the fuel, and the irradiation time.

Reactor data is given in Table 1. A uranium-235 enrichment of 3% was assumed. A lower enrichment is more conservative than a higher enrichment because the neutron flux will be higher to maintain the desired power level. The specific power used for the ORIGEN2 input was calculated by dividing the assembly burnup by the irradiation time. The specific power represents a radial peaking factor of 1.5 for the reactor.

Masses for the elements present in a TPBAR and hold-down assembly are derived in Appendix A. Impurities, which are important for both source term and waste classification analysis, are included for the various components. The cobalt in the stainless steel is the primary contributor to the dose rate for both the TPBAR and hold-down assembly. Both SS-304 and SS-316 contain 500 ppm cobalt. It needs to be noted that the bounding mass derived in Appendix A is valid only for

radiological source calculations. For mechanical analysis or radiological shielding analysis, the bounding TPBAR mass of 2.3 lbs. listed in Lopez (2002) for the Sequoyah Units and Lopez (2003) for Watts Bar should be referenced.

Table 1. Reactor Data

Reactor Data from Lopez 2002, 2003	
Parameter	**Value**
Mass of U, kg/assembly	462
Number of assemblies	193
Reactor Power, MW	3,459
Irradiation Time, d	510
Maximum Assembly Burnup, MWd/MTU	29,700
Assumptions	
U-235 enrichment, wt%	3.000
U-234 content is small and can be treated as if it is U-238.	
Reactor is at full power throughout the cycle.	
Calculated Numbers	
Mass U-235, g/MTU	30000
Mass U-238, g/MTU	970000
Specific Power for Assembly, MW/MTU	58.24
Radial Assembly Peaking Factor	1.50

ORIGEN2 was executed for the following 3 cases:

- complete TPBAR
- hold-down assembly (without thimble plugs)
- single thimble plug (SS-304)

The hold-down assembly and the thimble plugs are located above the active core. Therefore, the results must be modified by conservative "scaling factors" to account for the fact that these components are located outside the active region of the core.

The various components, their masses determined for radiological source analysis, and appropriate scaling factors are summarized in Table 2. Note that the average scaling factor for a thimble plug is 0.2 for radionuclide concentrations and decay heat. Since the thimble plug will activate more at the end closer to the core, where the scaling factor is estimated to be 0.5 (Guenther et al. 1988), the scaling factor for the thimble plug photon source term is assumed to be 0.5 to be conservative.

The scaling factor for the hold-down assembly was applied to the output from the ORIGEN2 calculation. The calculation for the thimble plug was made as one gram of material. The output from each calculation was multiplied by the mass of the thimble plug (150 grams) and the appropriate scaling factors.

Table 2. Summary of ORIGEN2 Cases

Component	Material	Mass (g)	Scaling Factor
Complete TPBAR	SS-316, Lithium Aluminate, Nickel, Aluminum, Zircaloy	1245	1.0 (no scaling factor) Note: Mass is valid only for radiological source calculations. Bounding mechanical and shielding mass of 2.3 lbs. is listed in Lopez (2002) and Lopez (2003).
Hold-Down Assembly (no thimble plugs)	SS-304 and Inconel	2815	0.1 (Migliore et al. 1994)
Single Thimble Plug	SS-304	150	0.2 for radionuclide concentrations and decay heat (Luksic 1989, averaged over whole thimble plug) 0.5 for source terms (Guenther et al. 1988)

ORIGEN2 input for each of these cases is given in Appendix B.

ORIGEN2 output does not report a complete list of radionuclides generated by irradiation as this list would be quite long. Rather the code provides a threshold value below which concentrations are not reported. For the above cases the threshold is set at a value such that any radionuclide whose value is nine orders of magnitude below the total for the item is not reported. In most cases this is sufficient to identify important radionuclides of concern. However, parent-daughter products (such as Sr-90 and Y-90) may not both be displayed if one of the radionuclides does not meet the threshold. Appendix D provides a listing of radionuclide concentrations for the TPBAR where the threshold has been lowered to report any concentration greater than 1 picocurie.

2.2 MCNP Methodology

Dose rates were estimated for the unshielded TPBAR and hold-down assembly using the MCNP code (RSICC 2000). MCNP is a general-purpose particle transport code commonly used for shielding applications. MCNP allows the user to model the problem geometry in as much detail as the user demands. Input includes the problem geometry, materials, and source term.

TPBAR Geometry. The TPBAR was modeled in a simplified manner as a piece of bare cladding using smeared geometry (but not smeared compositions) as described in Love (2003). Smeared geometry was used because the source term was calculated for the entire TPBAR, not for individual TPBAR components. To add conservatism the source (Table 5) is uniformly distributed throughout the smeared cladding region (i.e., no source in the inner region of the TPBAR). This assumption was made because the largest contributor to the dose rate is from cobalt activation in the cladding. Even more conservatism could be added by using unsmeared cladding dimensions because this would concentrate the source closer to the surface, but this level of conservatism is unwarranted because there will be a contribution to the dose rate from the TPBAR internals, which is approximately modeled by using smeared cladding dimensions. The entire length of the TPBAR was modeled. No shielding material was used in the model and the TPBAR is detached from the hold-down assembly.

Hold-Down Assembly Geometry. The geometry of the hold-down assembly was modeled in a simplified manner. All dimensions used in the model are approximate and sufficient to describe the hold-down assembly for the purpose of dose rate analyses. Dimensions are assumed and were chosen based upon the approximate cross sectional area of a fuel assembly and from personal communication with Westinghouse.

The TPBARs will be removed from the hold-down assembly prior to extraction, leaving only the thimble plugs. It was assumed that a hold-down assembly would contain at least 4 TPBARs, leaving 20 thimble plugs on the hold-down assembly. Figure 1 shows the assumed loading pattern. Each thimble plug was modeled as a cylinder with a radius of 0.5 cm and a length of 16 cm. The hold-down assembly itself was modeled as a cylindrical plate 0.7 cm thick with a radius of 12 cm. (Note: The entire mass and source term of the hold-down assembly is modeled as a single plate.) The steel composition was modeled as pure iron with an assumed density of 8 g/cc (approximate density of steel from Livingston 2001). No shielding material was used in the model.

The source term for the hold-down assembly (Table 8) is distributed uniformly throughout the plate. The source term for a thimble plug (Table 11) is distributed uniformly throughout each thimble plug. Note that the average scaling factor for a thimble plug is 0.2 for radionuclide concentrations (see Table 2). Because the thimble plug will activate more at the end closer to the core, where the scaling factor is estimated to be 0.5, to be conservative the source strength for a thimble plus is assumed to be 0.5 in the MCNP calculations.

Flux-to-dose rate conversion factors are used by MCNP to estimate dose rates. The conversion factors used are the ANSI/ANS-6.1.1-1977 standard

(Battat 1977). A 1991 standard is also available, but the 1977 standard is still in wide use and gives more conservative results than the 1991 standard.

The dose rates for both the TPBAR and hold-down assembly are computed for decay times of 7 days, 90 days, 180 days, 1 year, and 5 years. For the TPBAR, dose rates are calculated at the surface and at a distance of lm along the entire length. Dose rates at lm (radial) are also given for the centermost lm (axial) and represent an average over this axial region. For the hold-down assembly, dose rates are calculated at the top of the assembly, bottom of the thimble plugs, and around the sides of the assembly (at a radial distance of 12 cm from the centerline). All dose rates are averaged over surface areas.

Select MCNP input files are included in Appendix C.

3.0 ORIGEN2 RESULTS FOR RADIONUCLIDE CONCENTRATIONS, DECAY HEAT, AND PHOTON SOURCE TERMS; MCNP RESULTS FOR DOSE RATES

Complete results for TPBAR radionuclide concentrations, decay heat, and source terms are presented in Tables 3 through 5, respectively, for various decay times. The tritium results for the complete TPBAR have been forced to match the functional requirement of 1.2 g tritium maximum per TPBAR (e.g., the ORIGEN2 results for tritium are not reported in Tables 3 and 4). Similar results for the hold-down assembly are presented in Tables 6 through 8 and results for the thimble plug are given in Tables 9 through 11.

Complete results for the dose rates for a TPBAR and hold-down assembly are presented in Tables 12 and 13, respectively.

The source term was axially distributed uniformly throughout the TPBAR, i.e., core axial peaking was ignored in both the source term and dose rate analyses. Sufficient conservatism exists in the calculation that treating the axial peaking explicitly was unwarranted. The components were also modeled as existing in a vacuum and having no air attenuation, back-scattering, or other buildup factors included in the dose rates.

The relative axial profile of power per unit length for the TPBAR (without the bottom end plug) is shown in Figure 2. The peak-to-average ratio for this profile is 1.15. The bottom end plug is not shown as it represents 6.8% of the total power of the TPBAR. The remainder of the power is distributed as shown in Figure 2. This axial power distribution accounts for axial distribution of neutron fluence as deduced from the end of life axial distribution of tritium production, and also accounts for the higher mass/unit length in the bottom spacer region, which is the cause of the rise at the bottom end. This profile is provided for reference but was not used in these calculations.

The calculations in this document are conservative based upon the input assumptions and the calculational approach. The major assumptions are:

- Cobalt-60 is the major contributor to the dose rates. 500 ppm of cobalt was assumed for the calculations, which is the highest allowed by the stainless steel specification. The actual cobalt concentration could be a factor of 2 lower, which would cause the actual dose rates to be a factor of 2 lower than those calculated.

- Experimental data shows that ORIGEN2 tends to calculate cobalt-60 approximately 50% higher than expected (Migliore et. al. 1994).

- The flux-to-dose-rate conversion factors used in MCNP are a conservative set. The dose rates would decrease if a less conservative set of factors were used.

- The hold-down assembly was modeled as a plate. The actual hold-down assembly extends above the bottom plate, which would spread the source over a larger volume. The dose rate at the top of the hold-down assembly should decrease if a more detailed model were employed.

Table 3. Radionuclide Concentrations in a TPBAR (Ci/TPBAR)

Nuclide	7 Days	30 Days	90 Days	180 Days	1 Year	5 Years	10 Years
H-3[1]	1.16E+04	1.15E+04	1.14E+04	1.13E+04	1.10E+04	8.76E+03	6.61E+03
C 14	1.42E-03	1.42E-03	1.42E-03	1.42E-03	1.42E-03	1.42E-03	1.42E-03
NA 24	1.98E-02	1.65E-13	0.00E+00	0.00E+00	0.00E+00	0.00E+00	0.00E+00
P 32	1.03E+00	3.38E-01	1.84E-02	2.35E-04	3.02E-08	5.78E-10	5.75E-10
S 35	1.37E-02	1.15E-02	7.15E-03	3.52E-03	8.18E-04	8.22E-09	4.65E-15
AR 37	3.79E-01	2.40E-01	7.32E-02	1.23E-02	3.15E-04	8.74E-17	1.76E-32
AR 39	9.49E-03	9.49E-03	9.48E-03	9.48E-03	9.46E-03	9.37E-03	9.25E-03
K 42	2.18E-04	8.34E-12	8.31E-12	8.27E-12	8.18E-12	7.52E-12	6.77E-12
CA 41	7.51E-05	7.51E-05	7.51E-05	7.51E-05	7.51E-05	7.51E-05	7.51E-05
CA 45	3.13E-01	2.84E-01	2.20E-01	1.50E-01	6.82E-02	1.37E-04	5.78E-08
CA 47	1.57E-04	4.66E-06	4.86E-10	5.17E-16	2.62E-28	0.00E+00	0.00E+00
SC 46	8.20E-03	6.78E-03	4.13E-03	1.96E-03	4.24E-04	2.39E-09	6.57E-16
SC 47	5.68E-04	1.76E-05	1.86E-09	1.98E-15	1.00E-27	0.00E+00	0.00E+00
CR 51	9.67E+02	5.44E+02	1.21E+02	1.28E+01	1.24E-01	1.66E-17	2.38E-37
MN 54	4.19E+01	3.98E+01	3.48E+01	2.85E+01	1.89E+01	7.41E-01	1.29E-02
FE 55	2.15E+02	2.12E+02	2.03E+02	1.90E+02	1.66E+02	5.71E+01	1.51E+01
FE 59	1.98E+01	1.39E+01	5.52E+00	1.38E+00	7.96E-02	1.34E-11	8.14E-24
CO 58	2.69E+02	2.15E+02	1.19E+02	4.95E+01	8.06E+00	4.92E-06	8.41E-14
CO 60	3.60E+01	3.57E+01	3.49E+01	3.38E+01	3.16E+01	1.87E+01	9.68E+00
NI 59	1.68E-01	1.68E-01	1.68E-01	1.68E-01	1.68E-01	1.68E-01	1.68E-01

1 The ORIGEN2 values for H-3 are not reported. The values given for H-3 are based on a maximum of 1.2 g of tritium per TPBAR at discharge, as specified in the Functional Requirements document (Lopez 2003). There is 9664 Ci per gram of tritium, and the half-life of tritium is 12.33 years. The value of 1.2 g at discharge is decayed appropriately for the various decay times.

Nuclide	7 Days	30 Days	90 Days	180 Days	1 Year	5 Years	10 Years
NI 63	2.29E+01	2.29E+01	2.28E+01	2.28E+01	2.27E+01	2.20E+01	2.12E+01
NI 66	1.52E-04	1.38E-07	1.59E-15	1.97E-27	0.00E+00	0.00E+00	0.00E+00
CU 64	1.27E-03	1.04E-16	0.00E+00	0.00E+00	0.00E+00	0.00E+00	0.00E+00
CU 66	1.52E-04	1.38E-07	1.59E-15	1.97E-27	0.00E+00	0.00E+00	0.00E+00
ZN 65	4.13E-03	3.87E-03	3.26E-03	2.52E-03	1.49E-03	2.34E-05	1.31E-07
AS 76	8.74E-01	4.25E-07	1.44E-23	0.00E+00	0.00E+00	0.00E+00	0.00E+00
SE 75	8.88E-01	7.77E-01	5.49E-01	3.26E-01	1.12E-01	2.38E-05	6.13E-10
BR 82	1.14E-03	2.25E-08	1.18E-20	0.00E+00	0.00E+00	0.00E+00	0.00E+00
SR 89	7.51E-02	5.48E-02	2.40E-02	6.99E-03	5.49E-04	1.07E-12	1.39E-23
Y 89M	5.48E-04	4.18E-06	1.24E-11	6.39E-20	0.00E+00	0.00E+00	0.00E+00
Y 90	5.14E-01	1.30E-03	1.38E-06	1.37E-06	1.36E-06	1.23E-06	1.09E-06
Y 91	1.92E-01	1.46E-01	7.19E-02	2.47E-02	2.76E-03	8.38E-11	3.36E-20
ZR 89	5.49E-04	4.18E-06	1.25E-11	6.40E-20	5.60E-37	0.00E+00	0.00E+00
ZR 93	1.13E-04	1.13E-04	1.13E-04	1.13E-04	1.13E-04	1.13E-04	1.13E-04
ZR 95	6.57E+01	5.12E+01	2.67E+01	1.01E+01	1.36E+00	1.81E-07	4.63E-16
ZR 97	1.12E-01	1.65E-11	0.00E+00	0.00E+00	0.00E+00	0.00E+00	0.00E+00
NB 92	3.04E-01	6.34E-02	1.06E-03	2.28E-06	7.41E-12	0.00E+00	0.00E+00
NB 93M	3.68E-06	4.02E-06	4.87E-06	6.15E-06	8.73E-06	2.69E-05	4.49E-05
NB 94	4.76E-04	4.76E-04	4.76E-04	4.76E-04	4.76E-04	4.76E-04	4.76E-04
NB 95	6.93E+01	6.50E+01	4.45E+01	1.99E+01	2.94E+00	4.02E-07	1.03E-15
NB 95M	4.80E-01	3.80E-01	1.98E-01	7.48E-02	1.01E-02	1.34E-09	3.44E-18
NB 96	1.20E-03	9.19E-11	2.51E-29	0.00E+00	0.00E+00	0.00E+00	0.00E+00
NB 97	1.13E-01	1.78E-11	0.00E+00	0.00E+00	0.00E+00	0.00E+00	0.00E+00
NB 97M	1.06E-01	1.57E-11	0.00E+00	0.00E+00	0.00E+00	0.00E+00	0.00E+00
MO 93	1.04E-03	1.04E-03	1.04E-03	1.04E-03	1.04E-03	1.04E-03	1.04E-03
MO 99	1.68E+01	5.11E-02	1.38E-08	1.94E-18	0.00E+00	0.00E+00	0.00E+00
TC 99	4.35E-05	4.36E-05	4.36E-05	4.36E-05	4.36E-05	4.36E-05	4.36E-05
RU103	3.21E-03	2.14E-03	7.41E-04	1.52E-04	5.76E-06	3.67E-17	3.71E-31
CD115	2.91E-04	2.27E-07	1.78E-15	1.23E-27	0.00E+00	0.00E+00	0.00E+00
CD115M	1.84E-04	1.28E-04	5.05E-05	1.25E-05	7.00E-07	9.62E-17	4.52E-29
IN113M	1.31E+00	1.14E+00	7.94E-01	4.62E-01	1.51E-01	2.28E-05	3.83E-10
IN114	1.26E-01	9.13E-02	3.94E-02	1.12E-02	8.36E-04	1.10E-12	8.64E-24
IN114M	1.32E-01	9.54E-02	4.12E-02	1.17E-02	8.73E-04	1.15E-12	9.03E-24
SN113	1.31E+00	1.14E+00	7.93E-01	4.61E-01	1.51E-01	2.28E-05	3.82E-10
SN117M	8.21E+00	2.63E+00	1.35E-01	1.57E-03	1.64E-07	0.00E+00	0.00E+00
SN119M	8.42E+00	7.89E+00	6.66E+00	5.16E+00	3.06E+00	4.90E-02	2.80E-04
SN121	7.39E-02	4.66E-08	3.12E-24	0.00E+00	0.00E+00	0.00E+00	0.00E+00
SN121M	5.54E-04	5.53E-04	5.52E-04	5.50E-04	5.46E-04	5.17E-04	4.82E-04
SN123	4.78E-01	4.22E-01	3.06E-01	1.89E-01	6.99E-02	2.75E-05	1.52E-09
SN125	2.20E+00	4.21E-01	5.63E-03	8.71E-06	1.43E-11	0.00E+00	0.00E+00
SB122	1.10E-01	2.99E-04	6.12E-11	5.66E-21	0.00E+00	0.00E+00	0.00E+00
SB124	1.86E-02	1.43E-02	7.16E-03	2.54E-03	3.01E-04	1.49E-11	1.10E-20
SB125	1.67E+00	1.66E+00	1.60E+00	1.50E+00	1.32E+00	4.87E-01	1.39E-01

Nuclide	7 Days	30 Days	90 Days	180 Days	1 Year	5 Years	10 Years
SB126	5.64E-02	1.56E-02	5.45E-04	3.55E-06	1.13E-10	0.00E+00	0.00E+00
TE123M	3.02E-03	2.65E-03	1.87E-03	1.11E-03	3.80E-04	8.02E-08	2.05E-12
TE 125M	3.26E-01	3.40E-01	3.58E-01	3.56E-01	3.22E-01	1.19E-01	3.40E-02
CS131	5.10E-02	2.34E-02	1.17E-03	7.33E-06	1.50E-10	0.00E+00	0.00E+00
BA131	3.68E-02	9.53E-03	2.81E-04	1.43E-06	2.69E-11	0.00E+00	0.00E+00
BA133	7.43E-04	7.40E-04	7.32E-04	7.20E-04	697E-04	5.38E-04	3.90E-04
BA133M	3.65E-05	1.95E-09	1.39E-20	2.26E-37	0.00E+00	0.00E+00	0.00E+00
BA135M	2.77E-04	4.49E-10	3.51E-25	0.00E+00	0.00E+00	0.00E+00	0.00E+00
LA140	3.92E-04	1.86E-07	6.07E-09	4.62E-11	2.02E-15	0.00E+00	0.00E+00
LU177	2.13E-03	1.99E-04	1.57E-06	7.79E-07	3.40E-07	4.95E-10	1.40E-13
HF175	3.25E-02	2.59E-02	1.43E-02	5.86E-03	9.37E-04	4.88E-10	6.84E-18
HF181	8.82E-01	6.06E-01	2.27E-01	5.22E-02	2.52E-03	1.07E-13	1.15E-26
TA182	1.07E+01	9.33E+00	6.50E+00	3.78E+00	1.24E+00	1.85E-04	3.84E-09
TA183	2.54E+01	1.12E+00	3.21E-04	1.56E-09	1.82E-20	0.00E+00	0.00E+00
W181	5.88E-03	5.16E-03	3.66E-03	2.19E-03	7.58E-04	1.78E-07	5.17E-12
W185	2.09E-01	1.69E-01	9.69E-02	4.22E-02	7.64E-03	1.06E-08	5.09E-16
W187	2.68E-02	2.99E-09	2.18E-27	0.00E+00	0.00E+00	0.00E+00	0.00E+00
W188	1.65E-02	1.31E-02	7.22E-03	2.94E-03	4.62E-04	2.12E-10	2.54E-18
RE186	3.18E-02	4.66E-04	7.70E-09	5.16E-16	8.85E-31	0.00E+00	0.00E+00
RE188	1.79E-02	1.33E-02	7.29E-03	2.97E-03	4.67E-04	2.15E-10	2.57E-18
OS191	4.87E-05	1.73E-05	1.16E-06	2.03E-08	4.86E-12	0.00E+00	0.00E+00
TOTAL	1.34E+04	1.28E+04	1.21E+04	1.17E+04	1.12E+04	8.86E+03	6.66E+03

Table 4. Decay Heat in a TPBAR (Watts/TPBAR)

Nuclide	7 Days	30 Days	90 Days	180 Days	1 Year	5 Years	10 Years
H-3[2]	3.90E-01	3.89E-01	3.85E-01	3.80E-01	3.69E-01	2.95E-01	2.23E-01
P 32	1.04E-02	3.42E-03	1.87E-04	2.38E-06	3.06E-10	5.86E-12	5.83E-12
CR 51	2.07E-01	1.17E-01	2.60E-02	2.74E-03	2.66E-05	3.57E-21	5.10E-41
MN 54	2.09E-01	1.98E-01	1.73E-01	1.42E-01	9.42E-02	3.69E-03	6.42E-05
FE 55	7.28E-03	7.15E-03	6.85E-03	6.41E-03	5.60E-03	1.93E-03	5.08E-04
FE 59	1.54E-01	1.08E-01	4.28E-02	1.07E-02	6.16E-04	1.04E-13	6.30E-26
CO 58	1.61E+00	1.29E+00	7.14E-01	2.96E-01	4.82E-02	2.94E-08	5.03E-16
CO 60	5.55E-01	5.50E-01	5.39E-01	5.21E-01	4.88E-01	2.88E-01	1.49E-01
NI 63	2.30E-03	2.30E-03	2.30E-03	2.30E-03	2.29E-03	2.22E-03	2.14E-03
AS 76	7.74E-03	3.76E-09	1.28E-25	0.00E+00	0.00E+00	0.00E+00	0.00E+00
ZR 95	3.33E-01	2.60E-01	1.36E-01	5.11E-02	6.87E-03	9.18E-10	2.35E-18
NB 95	3.32E-01	3.12E-01	2.13E-01	9.53E-02	1.41E-02	1.93E-09	4.93E-18

2 The ORIGEN2 values for H-3 are not reported. The values given for H-3 are based on a maximum of 1.2 g of tritium per TPBAR at discharge, as specified in the Functional Requirements document (Lopez 2003). There is 0.325 W per gram of tritium, and the half-life of tritium is 12.33 years. The value of 1.2 g at discharge is decayed appropriately for the various decay times.

MO 99	5.40E-02	1.64E-04	4.44E-11	6.24E-21	0.00E+00	0.00E+00	0.00E+00
SN117M	1.52E-02	4.88E-03	2.50E-04	2.91E-06	3.03E-10	0.00E+00	0.00E+00
SN119M	4.35E-03	4.08E-03	3.44E-03	2.67E-03	1.58E-03	2.53E-05	1.45E-07
SN125	1.46E-02	2.79E-03	3.73E-05	5.77E-08	9.47E-14	0.00E+00	0.00E+00
SB125	5.23E-03	5.20E-03	5.00E-03	4.70E-03	4.14E-03	1.52E-03	4.35E-04
TA182	9.55E-02	8.31E-02	5.79E-02	3.36E-02	1.10E-02	1.65E-06	3.42E-11
TA183	1.61E-01	7.08E-03	2.03E-06	9.91E-12	1.15E-22	0.00E+00	0.00E+00
Total	4.19E+00	3.35E+00	2.31E+00	1.55E+00	1.05E+00	5.92E-01	3.75E-01

Table 5. Source Term in a TPBAR (Photons/s/TPBAR)

Energy (MeV)	7 Days	30 Days	90 Days	180 Days	1 Year	5 Years	10 Years
1.00E-02	7.73E+12	5.07E+12	2.33E+12	1.14E+12	6.01E+11	3.17E+11	2.28E+11
2.50E-02	6.71E+11	4.15E+11	2.59E+11	1.76E+11	1.03E+11	1.95E+10	7.02E+09
3.75E-02	1.80E+11	1.08E+11	6.65E+10	3.72E+10	1.85E+10	6.83E+09	2.84E+09
5.75E-02	5.80E+11	4.44E+11	2.90E+11	1.60E+11	5.27E+10	4.20E+09	2.15E+09
8.50E-02	1.52E+11	9.81E+10	5.86E+10	2.93E+10	9.11E+09	1.66E+09	8.49E+08
1.25E-01	2.24E+11	1.41E+11	8.80E+10	4.66E+10	1.45E+10	7.08E+08	3.45E+08
2.25E-01	4.52E+11	2.38E+11	1.20E+11	6.46E+10	2.15E+10	1.30E+09	4.20E+08
3.75E-01	3.06E+12	1.73E+12	4.10E+11	6.55E+10	1.94E+10	6.57E+09	1.90E+09
5.75E-01	2.75E+12	2.17E+12	1.21E+12	5.16E+11	1.02E+11	8.36E+09	2.39E+09
8.50E-01	1.56E+13	1.29E+13	7.83E+12	3.77E+12	1.11E+12	2.70E+10	5.28E+08
1.25E+00	3.05E+12	2.96E+12	2.81E+12	2.63E+12	2.38E+12	1.38E+12	7.16E+11
1.75E+00	5.01E+10	3.96E+10	2.20E+10	9.10E+09	1.48E+09	9.09E+02	5.52E+00
2.25E+00	2.12E+09	3.75E+08	3.27E+07	1.84E+07	1.30E+07	7.33E+06	3.80E+06
2.75E+00	7.48E+08	6.48E+04	5.30E+04	4.48E+04	3.88E+04	2.27E+04	1.18E+04
3.50E+00	5.05E+05	1.88E+00	6.13E-02	4.70E-04	3.16E-06	2.87E-06	2.58E-06
5.00E+00	5.21E+03	5.25E-08	6.64E-09	4.23E-09	1.67E-09	1.11E-12	1.93E-15
7.00E+00	6.37E-10	5.81E-10	4.31E-10	2.75E-10	1.09E-10	7.23E-14	1.25E-16
9.50E+00	4.03E-11	3.68E-11	2.72E-11	1.74E-11	6.87E-12	4.57E-15	7.93E-18
TOTAL	3.45E+13	2.63E+13	1.55E+13	8.65E+12	4.44E+12	1.78E+12	9.63E+11

Table 6. Radionuclide Concentrations in a Hold-Down Assembly, no thimble plugs (Ci/HDA) (scaling factor of 0.1 applied)

Isotope	7 Days	30 Days	90 Days	180 Days	1 Year	5 Years	10 Years
H 3	8.61E-07	8.58E-07	8.50E-07	8.39E-07	8.15E-07	6.51E-07	4.92E-07
C 14	3.10E-08	3.10E-08	3.10E-08	3.10E-08	3.10E-08	3.10E-08	3.10E-08
NA 24	1.11E-05	9.27E-17	0.00E+00	0.00E+00	0.00E+00	0.00E+00	0.00E+00
P 32	6.41E-01	2.10E-01	1.15E-02	1.46E-04	1.87E-08	2.15E-10	2.14E-10
P 33	2.92E-05	1.54E-05	2.92E-06	2.41E-07	1.42E-09	3.63E-27	0.00E+00
S 35	1.88E-02	1.57E-02	9.77E-03	4.81E-03	1.12E-03	1.12E-08	6.36E-15
CA 45	4.18E-04	3.79E-04	2.94E-04	2.00E-04	9.11E-05	1.83E-07	7.73E-11
CA 47	1.94E-06	5.77E-08	6.01E-12	6.40E-18	3.25E-30	0.00E+00	0.00E+00
SC 46	5.68E-02	4.69E-02	2.86E-02	1.36E-02	2.93E-03	1.65E-08	4.55E-15
SC 47	2.39E-02	2.05E-04	8.57E-10	3.13E-17	1.24E-29	0.00E+00	0.00E+00
SC 48	6.64E-04	1.07E-07	1.36E-17	1.95E-32	0.00E+00	0.00E+00	0.00E+00
CR 51	5.23E+02	2.94E+02	6.56E+01	6.90E+00	6.71E-02	8.99E-18	1.30E-37

Isotope	7 Days	30 Days	90 Days	180 Days	1 Year	5 Years	10 Years
MN 54	1.96E+01	1.87E+01	1.63E+01	1.34E+01	8.87E+00	3.47E-01	6.04E-03
FE 55	9.65E+01	9.49E+01	9.08E+01	8.50E+01	7.43E+01	2.56E+01	6.74E+00
FE 59	9.09E+00	6.38E+00	2.53E+00	6.33E-01	3.65E-02	6.15E-12	3.73E-24
CO 58	4.10E+01	3.27E+01	1.82E+01	7.53E+00	1.23E+00	7.49E-07	1.28E-14
CO 60	5.41E+01	5.37E+01	5.25E+01	5.09E+01	4.76E+01	2.81E+01	1.46E+01
NI 59	2.56E-02	2.56E-02	2.56E-02	2.56E-02	2.56E-02	2.56E-02	2.56E-02
NI 63	3.48E+00	3.48E+00	3.48E+00	3.47E+00	3.46E+00	3.35E+00	3.23E+00
NI 66	2.31E-05	2.10E-08	2.42E-16	3.00E-28	0.00E+00	0.00E+00	0.00E+00
CU 64	9.68E-04	7.98E-17	0.00E+00	0.00E+00	0.00E+00	0.00E+00	0.00E+00
CU 66	2.32E-05	2.10E-08	2.43E-16	3.01E-28	0.00E+00	0.00E+00	0.00E+00
CU 67	1.03E-06	2.11E-09	2.08E-16	6.40E-27	0.00E+00	0.00E+00	0.00E+00
ZN65	3.18E-03	2.98E-03	2.51E-03	1.95E-03	1.15E-03	1.81E-05	1.01E-07
Y 89M	3.13E-05	2.38E-07	7.10E-13	3.65E-21	0.00E+00	0.00E+00	0.00E+00
Y 90	1.44E-04	3.64E-07	4.92E-11	4.88E-11	4.82E-11	4.38E-11	3.89E-11
ZR 89	3.13E-05	2.39E-07	7.11E-13	3.65E-21	3.36E-38	0.00E+00	0.00E+00
ZR 95	4.18E-04	3.26E-04	1.70E-04	6.41E-05	8.62E-06	1.15E-12	2.95E-21
NB 92	3.04E-02	6.32E-03	1.06E-04	2.27E-07	7.38E-13	0.00E+00	0.00E+00
NB 94	7.76E-04	7.76E-04	7.76E-04	7.76E-04	7.76E-04	7.76E-04	7.76E-04
NB 95	1.38E+00	8.78E-01	2.69E-01	4.57E-02	1.20E-03	2.56E-12	6.54E-21
NB 95M	3.05E-06	2.42E-06	1.26E-06	4.76E-07	6.40E-08	8.55E-15	2.19E-23
NB 96	3.16E-05	2.42E-12	6.60E-31	0.00E+00	0.00E+00	0.00E+00	0.00E+00
MO 93	5.92E-05	5.92E-05	5.92E-05	5.92E-05	5.91E-05	5.91E-05	5.90E-05
MO 99	9.60E-01	2.91E-03	7.87E-10	1.11E-19	0.00E+00	0.00E+00	0.00E+00
TC 99	2.48E-06	2.49E-06	2.49E-06	2.49E-06	2.49E-06	2.49E-06	2.49E-06
RU103	1.83E-04	1.22E-04	4.23E-05	8.64E-06	3.29E-07	2.09E-18	2.12E-32
TOTAL	7.50E+02	5.05E+02	2.50E+02	1.68E+02	1.36E+02	5.74E+01	2.46E+01

Table 7. Decay Heat in a Hold-Down Assembly, no thimble plugs (Watts/HDA) (scaling factor of 0.1 applied)

Isotope	7 Days	30 Days	90 Days	180 Days	1 Year	5 Years	10 Years
P 32	6.50E-03	2.13E-03	1.16E-04	1.48E-06	1.89E-10	2.18E-12	2.17E-12
CR 51	1.12E-01	6.31E-02	1.41E-02	1.48E-03	1.44E-05	1.93E-21	2.78E-41
MN 54	9.77E-02	9.28E-02	8.13E-02	6.66E-02	4.41E-02	1.73E-03	3.01E-05
FE 55	3.26E-03	3.21E-03	3.07E-03	2.87E-03	2.51E-03	8.64E-04	2.28E-04
FE 59	7.04E-02	4.94E-02	1.96E-02	4.90E-03	2.83E-04	4.76E-14	2.89E-26
CO 58	2.45E-01	1.96E-01	1.09E-01	4.50E-02	7.34E-03	4.48E-09	7.65E-17
CO 60	8.35E-01	8.28E-01	8.10E-01	7.84E-01	7.34E-01	4.34E-01	2.25E-01
NI 63	3.51E-04	3.51E-04	3.50E-04	3.50E-04	3.48E-04	3.38E-04	3.25E-04
NB 95	6.63E-03	4.21E-03	1.29E-03	2.19E-04	5.76E-06	1.23E-14	3.14E-23
MO 99	3.08E-03	9.35E-06	2.53E-12	3.56E-22	0.00E+00	0.00E+00	0.00E+00
TOTAL	1.38E+00	1.24E+00	1.04E+00	9.06E-01	7.88E-01	4.36E-01	2.25E-01

Table 8. Source Term for Hold-Down Assembly, no thimble plugs (Photons/s/HDA) (scaling factor of 0.1 applied)

Energy (MeV)	7 Days	30 Days	90 Days	180 Days	1 Year	5 Years	10 Years
1.00E-02	2.76E+12	1.71E+12	6.17E+11	2.62E+11	1.50E+11	5.76E+10	2.93E+10
2.50E-02	4.42E+10	3.60E+10	2.69E+10	2.08E+10	1.67E+10	9.57E+09	4.98E+09
3.75E-02	2.73E+10	2.18E+10	1.60E+10	1.21E+10	9.57E+09	5.45E+09	2.83E+09
5.75E-02	3.48E+10	2.77E+10	1.97E+10	1.44E+10	1.09E+10	6.14E+09	3.18E+09
8.50E-02	1.80E+10	1.39E+10	9.34E+09	6.30E+09	4.39E+09	2.41E+09	1.25E+09
1.25E-01	1.21E+10	7.62E+09	4.79E+09	2.91E+09	1.77E+09	9.27E+08	4.80E+08
2.25E-01	1.31E+10	7.87E+09	4.41E+09	2.12E+09	7.69E+08	3.05E+08	1.58E+08
3.75E-01	1.62E+12	9.13E+11	2.04E+11	2.21E+10	4.49E+08	8.55E+07	4.43E+07
5.75E-01	4.05E+11	3.23E+11	1.80E+11	7.44E+10	1.21E+10	4.93E+06	2.54E+06
8.50E-01	2.21E+12	1.86E+12	1.25E+12	7.54E+11	3.66E+11	1.27E+10	3.13E+08
1.25E+00	4.01E+12	3.97E+12	3.89E+12	3.76E+12	3.52E+12	2.08E+12	1.08E+12
1.75E+00	7.50E+09	5.99E+09	3.33E+09	1.38E+09	2.25E+08	1.37E+02	2.00E-04
2.25E+00	2.12E+07	2.11E+07	2.06E+07	1.99E+07	1.87E+07	1.10E+07	5.71E+06
2.75E+00	4.76E+05	6.51E+04	6.37E+04	6.17E+04	5.77E+04	3.41E+04	1.77E+04
3.50E+00	2.81E+02	4.06E-09	1.53E-09	1.29E-09	9.14E-10	6.44E-11	7.67E-12
5.00E+00	2.92E+00	2.44E-11	0.00E+00	0.00E+00	0.00E+00	0.00E+00	0.00E+00
7.00E+00	0.00E+00	0.00E+00	0.00E+00	0.00E+00	0.00E+00	0.00E+00	0.00E+00
9.50E+00	0.00E+00	0.00E+00	0.00E+00	0.00E+00	0.00E+00	0.00E+00	0.00E+00
TOTAL	1.12E+13	8.91E+12	6.22E+12	4.94E+12	4.09E+12	2.18E+12	1.12E+12

Table 9. Radionuclide Concentrations for Single Thimble Plug (Ci/thimble plug) (scaling factor of 0.2 and mass of 150g applied)

Isotope	7 Days	30 Days	90 Days	180 Days	1 Year	5 Years	10 Years
H 3	9.18E-08	9.15E-08	9.07E-08	8.94E-08	8.69E-08	6.94E-08	5.24E-08
C 14	3.31E-09	3.31E-09	3.31E-09	3.31E-09	3.31E-09	3.31E-09	3.31E-09
P 32	7.69E-02	2.52E-02	1.38E-03	1.75E-05	2.23E-09	2.53E-11	2.51E-11
P 33	3.41E-06	1.80E-06	3.41E-07	2.81E-08	1.65E-10	4.23E-28	0.00E+00
S 35	2.19E-03	1.83E-03	1.14E-03	5.60E-04	1.30E-04	1.31E-09	7.41E-16
SC 47	3.40E-07	2.93E-09	1.34E-14	1.73E-21	8.28E-34	0.00E+00	0.00E+00
SC 48	1.11E-07	1.78E-11	2.26E-21	3.01E-36	0.00E+00	0.00E+00	0.00E+00
CR 51	5.69E+01	3.20E+01	7.13E+00	7.50E-01	7.29E-03	9.77E-19	0.00E+00
MN 54	2.35E+00	2.24E+00	1.96E+00	1.60E+00	1.06E+00	4.16E-02	7.25E-04
FE 55	1.15E+01	1.13E+01	1.08E+01	1.01E+01	8.82E+00	3.04E+00	8.01E-01
FE 59	1.09E+00	7.61E-01	3.02E-01	7.55E-02	4.36E-03	7.34E-13	4.46E-25
CO 58	2.65E+00	2.12E+00	1.18E+00	4.87E-01	7.94E-02	4.85E-08	8.28E-16
CO 60	1.69E+00	1.68E+00	1.64E+00	1.59E+00	1.49E+00	8.79E-01	4.55E-01
NI 59	1.65E-03	1.65E-03	1.65E-03	1.65E-03	1.65E-03	1.65E-03	1.65E-03
NI 63	2.25E-01	2.25E-01	2.25E-01	2.24E-01	2.24E-01	2.17E-01	2.09E-01
NI 66	1.49E-06	1.35E-09	1.56E-17	1.94E-29	0.00E+00	0.00E+00	0.00E+00

Isotope	7 Days	30 Days	90 Days	180 Days	1 Year	5 Years	10 Years
CU 64	1.45E-07	1.20E-20	0.00E+00	0.00E+00	0.00E+00	0.00E+00	0.00E+00
CU 66	1.50E-06	1.36E-09	1.57E-17	1.94E-29	0.00E+00	0.00E+00	0.00E+00
ZN 65	1.01E-07	9.44E-08	7.96E-08	6.16E-08	3.64E-08	5.72E-10	3.19E-12
Y 89M	3.83E-06	2.92E-08	8.69E-14	4.47E-22	0.00E+00	0.00E+00	0.00E+00
Y 90	9.39E-07	2.38E-09	1.21E-12	1.21E-12	1.19E-12	1.08E-12	9.61E-13
ZR 89	3.84E-06	2.92E-08	8.70E-14	4.47E-22	0.00E+00	0.00E+00	0.00E+00
ZR 95	5.12E-05	3.99E-05	2.08E-05	7.85E-06	1.06E-06	1.41E-13	3.61E-22
NB 92	2.16E-03	4.49E-04	7.49E-06	1.62E-08	5.25E-14	0.00E+00	0.00E+00
NB 94	5.04E-06	5.04E-06	5.04E-06	5.04E-06	5.04E-06	5.04E-06	5.04E-06
NB 95	9.08E-03	5.78E-03	1.79E-03	3.13E-04	1.00E-05	3.13E-13	8.01E-22
NB 95M	3.74E-07	2.96E-07	1.55E-07	5.83E-08	7.83E-09	1.05E-15	2.68E-24
NB 96	1.02E-06	7.79E-14	2.12E-32	0.00E+00	0.00E+00	0.00E+00	0.00E+00
MO 93	7.25E-06	7.25E-06	7.25E-06	7.25E-06	7.24E-06	7.24E-06	7.23E-06
MO 99	1.18E-01	3.57E-04	9.65E-11	1.36E-20	0.00E+00	0.00E+00	0.00E+00
TC 99	3.04E-07	3.05E-07	3.05E-07	3.05E-07	3.05E-07	3.05E-07	3.05E-07
RU103	2.24E-05	1.49E-05	5.18E-06	1.06E-06	4.03E-08	2.57E-19	2.60E-33
TOTAL	7.65E+01	5.03E+01	2.32E+01	1.48E+01	1.17E+01	4.18E+00	1.47E+00

Table 10. Decay Heat in a Single Thimble Plug (Watts/thimble plug)
(scaling factor of 0.2 and mass of 150g applied)

Isotope	7 Days	30 Days	90 Days	180 Days	1 Year	5 Years	10 Years
P 32	7.79E-04	2.56E-04	1.39E-05	1.78E-07	2.26E-11	2.56E-13	2.55E-13
CR 51	1.22E-02	6.86E-03	1.53E-03	1.61E-04	1.56E-06	2.10E-22	0.00E+00
MN 54	1.17E-02	1.11E-02	9.75E-03	7.99E-03	5.30E-03	2.07E-04	3.61E-06
FE 55	3.87E-04	3.81E-04	3.65E-04	3.41E-04	2.98E-04	1.03E-04	2.71E-05
FE 59	8.40E-03	5.90E-03	2.34E-03	5.85E-04	3.37E-05	5.68E-15	3.45E-27
CO 58	1.59E-02	1.27E-02	7.04E-03	2.91E-03	4.75E-04	2.90E-10	4.95E-18
CO 60	2.61E-02	2.59E-02	2.53E-02	2.45E-02	2.29E-02	1.36E-02	7.02E-03
NI 63	2.27E-05	2.27E-05	2.27E-05	2.26E-05	2.25E-05	2.19E-05	2.11E-05
MO 99	3.77E-04	1.15E-06	3.10E-13	4.36E-23	0.00E+00	0.00E+00	0.00E+00
TOTAL	7.59E-02	6.31E-02	4.64E-02	3.65E-02	2.91E-02	1.39E-02	7.07E-03

Table 11. Source Term for a Single Thimble Plug (Photons/s/thimble plug)
(scaling factor of 0.5 and mass of 150g applied)

Energy (Mev)	7 Days	30 Days	90 Days	180 Days	1 Year	5 Years	10 Years
1.00E-02	6.95E+11	4.18E+11	1.34E+11	4.68E+10	2.27E+10	4.95E+09	2.35E+09
2.50E-02	6.68E+09	4.76E+09	3.01E+09	1.96E+09	1.36E+09	7.52E+08	3.92E+08
3.75E-02	4.25E+09	2.93E+09	1.83E+09	1.16E+09	7.80E+08	4.27E+08	2.22E+08
5.75E-02	5.49E+09	3.85E+09	2.34E+09	1.42E+09	8.96E+08	4.80E+08	2.49E+08
8.50E-02	2.97E+09	2.03E+09	1.18E+09	6.66E+08	3.69E+08	1.89E+08	9.77E+07
1.25E-01	2.36E+09	1.17E+09	6.53E+08	3.36E+08	1.55E+08	7.24E+07	3.75E+07

Energy (Mev)	7 Days	30 Days	90 Days	180 Days	1 Year	5 Years	10 Years
2.25E-01	2.53E+09	1.30E+09	6.81E+08	3.00E+08	8.15E+07	2.38E+07	1.23E+07
3.75E-01	4.40E+11	2.48E+11	5.54E+10	5.91E+09	8.33E+07	6.68E+06	3.46E+06
5.75E-01	6.56E+10	5.23E+10	2.90E+10	1.20E+10	1.96E+09	3.85E+05	1.99E+05
8.50E-01	4.50E+11	3.91E+11	2.82E+11	1.89E+11	1.04E+11	3.79E+09	6.98E+07
1.25E+00	3.13E+11	3.11E+11	3.04E+11	2.94E+11	2.75E+11	1.63E+11	8.42E+10
1.75E+00	1.21E+09	9.69E+08	5.38E+08	2.23E+08	3.63E+07	2.22E+01	1.32E-05
2.25E+00	1.66E+06	1.65E+06	1.61E+06	1.56E+06	1.46E+06	8.62E+05	4.46E+05
2.75E+00	5.13E+03	5.09E+03	4.98E+03	4.82E+03	4.51E+03	2.67E+03	1.38E+03
3.50E+00	1.32E-05	5.11E-10	4.56E-10	3.86E-10	2.75E-10	1.75E-11	5.16E-13
5.00E+00	1.38E-07	1.15E-18	0.00E+00	0.00E+00	0.00E+00	0.00E+00	0.00E+00
7.00E+00	0.00E+00	0.00E+00	0.00E+00	0.00E+00	0.00E+00	0.00E+00	0.00E+00
9.50E+00	0.00E+00	0.00E+00	0.00E+00	0.00E+00	0.00E+00	0.00E+00	0.00E+00
TOTAL	1.99E+12	1.44E+12	8.14E+11	5.54E+11	4.07E+11	1.73E+11	8.77E+10

Table 12. Dose Rates for the TPBAR (rem/hr)[3]

	7 days	90 days	180 days	1 year	5 years
Surface, Entire Length	77, 000	42,000	25,000	14,000	6200
1m from TPBAR, Entire Length	160	86	52	29	13
1m from TPBAR, lm In Center (average)	180	97	59	33	14

Table 13. Surface Dose Rates for the Hold-Down Assembly (rem/hr) (including 20 thimble plugs)[3]

	7 days	90 days	180 days	1 year	5 years
Top of Assembly	51,000	38,000	32,000	27,000	15,000
Bottom of Assembly	34,000	22,000	18,000	14,000	6800
Side of Assembly	28,000	19,000	16,000	13,000	6400

4.0 REFERENCES

ASTM A 213-95. *Standard Specification for Seamless Ferritic and Austenitic Alloy-Steel Boiler, Superheater, and Heat-Exchanger Tubes.* American National Standards Institute.

Battat ME. 1977. *American National Standard Neutron and Gamma-Ray Flux-to-Dose Rate Factors.* ANSI/ANS-6.1.1-1977 (N666). American Nuclear Society, LaGrange Park, Illinois.

3 The dose rates are rounded to two significant figures. The MCNP statistical uncertainty in the results is less than 1%.

Gates RO. 2001. *Production Specification for Enriched, Annular $LiAlO_2$ Pellets.* TTQP-1-076, Rev. 4. Pacific Northwest National Laboratory, Richland, Washington.

Guenther, RJ, DE Blanik, TK Campbell, UP Jenquin, JE Mendel, LE Thomas, and CK Thornhill. 1988. *Characterization of Spent Fuel Approved Testing Material – ATM-103.* PNL-5109-103. Pacific Northwest Laboratory, Richland, Washington.

Livingston JV. 2001. *Materials Properties Handbook for the Tritium Target Qualification Project.* TTQP-7-008, Rev. 3. Pacific Northwest National Laboratory, Richland, Washington.

Lopez Jr. A. 2002. *Production TPBAR Design Inputs for Sequoyah Units 1 and 2 (U).* TTQP-1-118, Rev. 7. Pacific Northwest National Laboratory, Richland, Washington.

Lopez Jr. A. 2003. *Production TPBAR Design Inputs for Watts Bar (U).* PNNL-TTQP-1-702, Rev. 9. Pacific Northwest National Laboratory, Richland, Washington.

Love EF. 2003. *Homogenization of the Production and Full-Length Getter TPBARs (U).* PNNL-TTQP-1-718, Rev. 4. Pacific Northwest National Laboratory, Richland, Washington. (CRD)

Luksic AT. 1989. *Spent Fuel Assembly Hardware: Characterization and 10 CFR 61 Classification with Calculation for Spent Fuel Assembly Hardware.* PNL-6906. Pacific Northwest Laboratory, Richland, Washington.

Migliore RJ, BD Reid, SK Fadeff, KA Pauley, and UP Jenquin. 1994. *Non-Fuel Assembly Components: 10 CFR 61.55 Classification for Waste Disposal.* PNL-10103. Pacific Northwest Laboratory. Richland, Washington.

Migliore RJ. 1998a. *Waste Classification for the Mark 2 TPBAR.* TTQP-1-2011, Rev. 0. Pacific Northwest Laboratory. Richland, Washington.

Migliore RJ. 1998b. *Source Term and Dose Rates for the LTA Hold-Down Assembly.* TTQP-1-084, Rev. 1. Pacific Northwest National Laboratory, Richland, Washington.

Migliore RJ. 1998c. *TPBAR Source Term, Radionuclide Concentrations, and Decay Heat.* TTQP-1-050, Rev. 2. Pacific Northwest National Laboratory, Richland, Washington.

Migliore RJ. 2000. *Bending Limits for Watts Bar Production TPBAR (U).* PNNL-TTQP-1-707, Rev. 3. Pacific Northwest National Laboratory, Richland, Washington. (CRD).

Migliore RJ, and UP Jenquin. 1998. *Bounding TPBAR Source Term, Radionuclide Concentrations, and Decay Heat.* TTQP-1-2012, Rev. 1. Pacific Northwest National Laboratory, Richland, Washington.

Pagh RT. 2003. *Bounding Source Term, Radionuclide Concentrations, Decay Heat, and Dose Rates for Production TPBAR (U).* PNNL-TTQP-1-726, Rev. 3. Pacific Northwest National Laboratory, Richland, Washington. (CRD).

RSIC Computer Code Collection. 1996. *ORIGEN2.1: Isotope Generation and Depletion Code - Matrix Exponential Method.* CCC-371, Oak Ridge National Laboratory, Oak Ridge, Tennessee.

RSICC Computer Code Collection. 2000. *MCNP4C – Monte Carlo N-Particle Transport Code System.* CCC-700. Oak Ridge National Laboratory, Oak Ridge, Tennessee.

RSICC Computer Code Collection. 2002. *ORIGEN2.2: Isotope Generation and Depletion Code - Matrix Exponential Method.* CCC-371, Oak Ridge National Laboratory, Oak Ridge, Tennessee.

Special Metals. 2003. http://www.magellanmetals.com/inconel_X750.htm

Walker FW, JR Parrington, and F Feiner. 1989. *Chart of the Nuclides 14th Edition.* General Electric Co., San Jose, California.

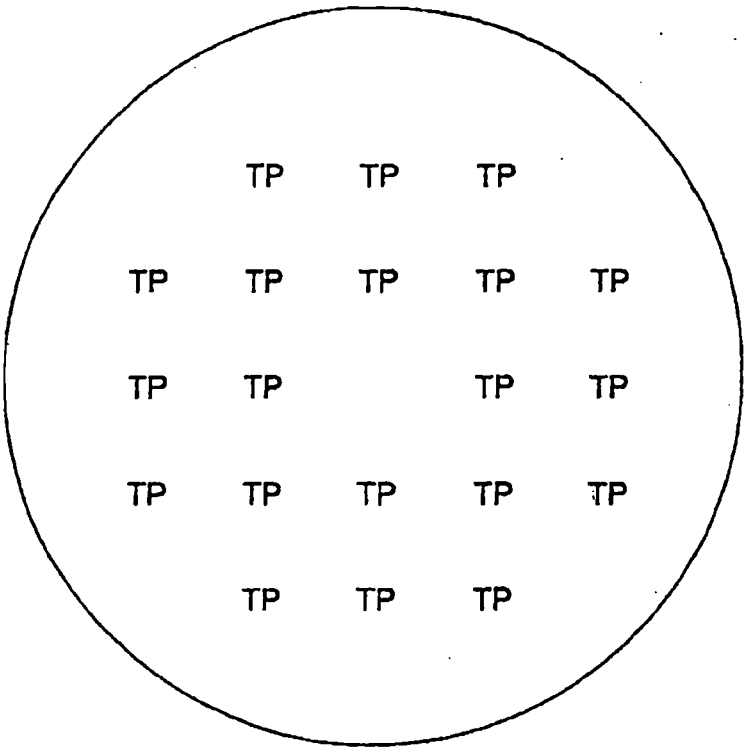

Figure 1. Assumed Hold-Down Assembly Thimble Plug (TP) Loading Pattern

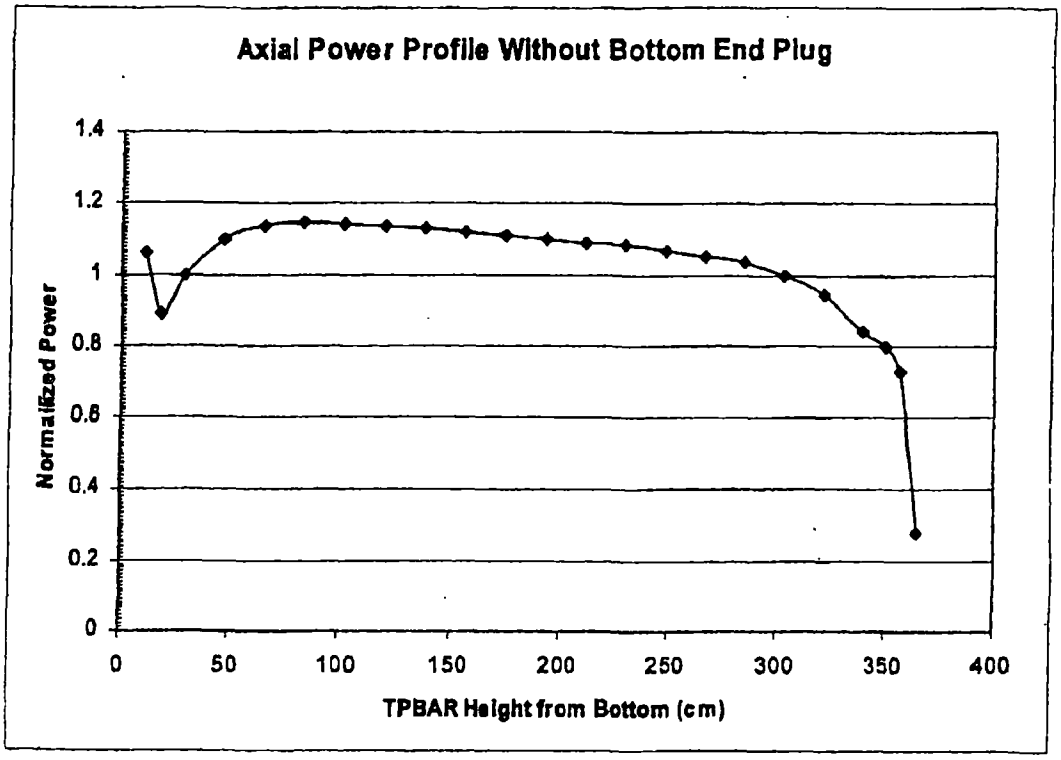

Figure 2. Axial Power Profile without Bottom End Plug

APPENDIX A

TPBAR Constituents

Masses for the elements present in a TPBAR were obtained from various sources as referenced on pages 20-22. All material in the TPBAR was accounted for including the aluminide barrier and the nickel plating on the getters. The bounding masses derived here are for radiological source assessment and not mechanical analysis or radiological shielding (self-shielding) analysis. Bounding mechanical and shielding masses are 2.3 lbs. from Lopez (2002) for the Sequoyah Units and Lopez (2003) for Watts Bar.

Compositions of the Zircaloy and SS-316 were taken from Livingston (2001).

Composition of the pellet was taken from Gates (2001).

Composition of the Inconel was taken from Special Metals (2003).

Composition of the SS-304 was taken primarily from ASTM A 213. Because this ASTM standard does not contain values for cobalt, niobium, and molybdenum, the weight percent of cobalt was assumed, while the weight percent of the molybdenum and niobium were taken from Migliore (1998b).

Table A-1. Data for Developing the TPBAR Constituents

Parameter	Value	Reference
Mass of hold-down assembly (SS304)	5.29 lb	PNNL-TTQP-1-702 R9
Mass of inconel in HDA	0.5 lb	PNNL-TTQP-1-702 R9
Mass of thimble plug (SS304)	0.3 lb	PNNL-TTQP-1-702 R9
Atomic Weight of Ni	58.69 g/mole	Chart of the Nuclides
Atomic Weight of Li-6	6.015 g/mole	Chart of the Nuclides
Atomic Weight of Li-7	7.016 g/mole	Chart of the Nuclides
Atomic Weight Al	26.9815 g/mole	Chart of the Nuclides
Atomic Weight of O	15.9994 g/mole	Chart of the Nuclides
Avogrado's No.	6.022E+23 a/mole	Chart of the Nuclides
Li Nominal Enrichment	33.7% atom%	PNNL-TTQP-1-702 R9
Assumptions		
Assumed Mass of Stainless Steel (total)	565 g	PNNL-TTQP-1-726 R3
Assumed Mass Zircaloy-4	215 g	PNNL-TTQP-1-726 R3
Assumed Mass LiA1O2	210 g	PNNL-TTQP-1-726 R3
Assumed Mass of Nickel Plating	255 g	PNNL-TTQP-1-726 R3
Cobalt Concentration	500 ppm	For SS-304
Add the pellet impurities to the given pellet mass. The resulting mass will be larger than the value given above, bringing the total to 217g.		
Fe+Cr+Ni impurity in the pellet is split equally.		
U in the Zircaloy-4 and F, Cl, I, & Br in the pellet have a negligible contribution and will not be included in the ORIGEN2 model.		
Calculated Values		
Mass of hold-down assembly (SS304)	2815 g	Bounding Value
Mass of inconel in HDA	365 g	Bounding Value
Mass of thimble plug (SS304)	150 g	Bounding Value
Atomic Weight of Enriched Li	6.679 g/mole	
Molecular Weight of LiA1O2	65.66 g/mole	
Mass of Li-6	6.48 g	
Mass of Li-7	14.88 g	
Mass of Al	86.30 g	
Mass of O	102.34 g	

Table A-2. Material Impurities, wt%

Element	Zircaloy-4	316-SS	Pellet	304-SS	Inconel X
	TTQP-7-008 R3	TTQP-7-008 R3	TTQP-1-076 R4	ASTM A 213	Special Metals
Fe	0.24	Remainder		Remainder	9.0
Cr	0.13	18.0		20	17.0
Ni	0.0070	14.0		11	Remainder
Zr	Remainder				
Fe+Cr+Ni			0.6		
F+Cl+I+Br			0.06		
Al	0.0075	0.05			1.0
As		0.03	0.05		
B	0.00005	0.002			
Ba			0.08		
C	0.027	0.06	0.15	0.08	0.08
Ca			0.4		
Cd	0.00005				
Co	0.0020	0.050		0.05[4]	1.0
Cu	0.0050	0.04			0.5
H	0.0025				
Hf	0.010				
K			0.5		
Mg	0.0020		0.2		
Mn	0.0050	2.00		2	1.0
Mo	0.0050	3.00		0.3965	
N	0.0080	0.01			
Na			0.5		
Nb		0.05		0.01[5]	1.2
P		0.04		0.04	
Pb			0.04		
S		0.01		0.03	0.01
Se			0.035		
Si	0.0120	0.75	1.0	0.75	0.5
Sn	1.70				
Ta		0.02			
Ti	0.0050				2.75
V		0.05			
W	0.010				
Zr					
U	0.00035				
Total	2.18	38.16	3.62	34.36	34.04
Calculated Numbers, wt%					
Fe		61.84		65.64	
Zr	97.82				
Ni					65.96

4 Assumed.
5 From Migliore 1998b

Table A-3. Nuclide Mass Values, g

							pounds	g
					SS in holddown		5.401	2450
ORIGEN2 Mass Input					Inconel in holddown		0.805	365
Mass(g) =		215.0	565.0	210.0		1.0	1.0	
Nuclide	ORIGEN2 ID	Zircaloy-4	316-SS	Pellet	TPBAR (with Ni)	304-SS	Inconel X	HDA
Li-6	30060			6.48E+00	6.48E+00			
Li-7	30070			1.49E+01	1.49E+01			
Fe	260000	5.16E-01	3.49E+02	4.20E-01	3.50E+02	6.56E-01	9.00E-02	1.64E+03
Cr	240000	2.80E-01	1.02E+02	4.20E-01	1.02E+02	2.00E-01	1.70E-01	5.52E+02
Ni[6]	280000	1.51E-02	7.91E+01	4.20E-01	3.35E+02	1.10E-01	6.60E-01	5.10E+02
O	80000			1.02E+02	1.02E+02			
Al	130000	1.61E-02	2.83E-01	8.63E+01	8.66E+01		1.00E-02	3.65E+00
As	330000		1.70E-01	1.05E-01	2.75E-01			
B	50000	1.08E-04	1.13E-02		1.14E-02			
Ba	560000			1.68E-01	1.68E-01			
C	60000	5.81E-02	3.39E-01	3.15E-01	7.12E-01	8.00E-04	8.00E-04	2.25E+00
Ca	200000			8.40E-01	8.40E-01			
Cd	480000	1.08E-04			1.08E-04			
Co	270000	4.30E-03	2.83E-01		2.87E-01	5.00E-04	1.00E-02	4.88E+00
Cu	290000	1.08E-02	2.26E-01		2.37E-01		5.00E-03	1.83E+00
H	10000	5.38E-03			5.38E-03			
Hf	720000	2.15E-02			2.15E-02			
K	190000			1.05E+00	1.05E+00			
Mg	120000	4.30E-03		4.20E-01	4.24E-01			
Mn	250000	1.08E-02	1.13E+01		1.13E+01	2.00E-02	1.00E-02	5.27E+01
Mo	420000	1.08E-02	1.70E+01		1.70E+01	3.96E-03		9.70E+00
N	70000	1.72E-02	5.65E-02		7.37E-02			
Na	110000			1.05E+00	1.05E+00			
Nb	410000		2.83E-01		2.83E-01	1.00E-04	1.20E-02	4.63E+00
P	150000		2.26E-01		2.26E-01	4.00E-04		9.80E-01
Pb	820000			8.40E-02	8.40E-02			
S	160000		5.65E-02		5.65E-02	3.00E-04	1.00E-04	7.72E-01
Se	340000			7.35E-02	7.35E-02			
Si	140000	2.58E-02	4.24E+00	2.10E+00	6.36E+00	7.50E-03	5.00E-03	2.02E+01
Sn	500000	3.66E+00			3.66E+00			
Ta	730000		1.13E-01		1.13E-01			
Ti	220000	1.08E-02			1.08E-02		2.75E-02	1.00E+01
V	230000		2.83E-01		2.83E-01			
W	740000	2.15E-02			2.15E-02			
Zr	400000	2.10E+02			2.10E+02			
U	920000	7.53E-04			7.53E-04			
Total		2.15E+02	5.65E+02	2.17E+02	1.25E+03	1.00E+00	1.00E+00	2.82E+03

6 The total value for nickel in column 6 includes the assumed 255g of nickel plating.

APPENDIX B

ORIGEN2 Input and Output

The ORIGEN2 input files are listed on the following pages. They are:

- TPBAR.INP- One TPBAR
- HDA.INP- One hold-down assembly (no thimble plugs)
- SS304.INP-One gram of SS304 (thimble plug)

The PWRU library was used for the calculations because its enrichment (3.1%) most closely matches the assumed assembly enrichment (3.0%).

ORIGEN2 was executed on a Dell OptiPlex Gx1 Pentium-II with Windows 98, which has been approved for Commercial Nuclear Related calculations.

TPBAR.INP

```
-1
-1
-1
TIT     Prod.  Reactor Target Rod Waste Eval.:  TPBAR
RDA     PD = 58.24 MW/MTU   E = 3.0
BAS     1 TPBAR
LIB     0 1 2 3 204 205 206 9 3 0 1 1
PHO     101 102 103 10
LIP     0 0 0
INP     1 1 -1 -1 1 1
BUP
IRP      50.  58.24     1  2  4  2
IRP     100.  58.24     2  3  4  0
IRP     150.  58.24     3  4  4  0
IRP     200.  58.24     4  5  4  0
IRP     250.  58.24     5  6  4  0
IRP     300.  58.24     6  7  4  0
IRP     350.  58.24     7  8  4  0
IRP     400.  58.24     8  9  4  0
IRP     450.  58.24     9 10  4  0
IRP     500.  58.24    10 11  4  0
IRP     510.  58.24    11  1  4  0
BUP
DEC      7.             1  2  4  2
DEC     30.             2  3  4  0
DEC     90.             3  4  4  0
DEC    180.             4  5  4  0
DEC      1.             5  6  5  0
DEC      5.             6  7  5  0
DEC     10.             7  8  5  0
HED     1   Discharge
HED     2    7 Days
HED     3   30 Days
HED     4   90 Days
HED     5  180 Days
HED     6    1 Year
HED     7    5 Years
HED     8   10 Years
OPTL    8 8 8 8 7 8 7 8 7 8 8 8 8 8 8 8 8 8 8 8 8 8 8 8 8
OPTA    8 8 8 8 7 8 8 8 8 8 8 8 8 8 8 8 8 8 8 8 8 8 8 8 8
OPTF    8 8 8 8 8 8 8 8 8 8 8 8 8 8 8 8 8 8 8 8 8 8 8 8 8
CUT     7 1.0E-9 -1
OUT     8  1  0  -1
STP     4
1        30060 6.48E+00    30070 1.49E+01        0      0.0
2       922350  30000.0   922380 970000.0        0      0.0
4       260000 3.50E+02   240000 1.02E+02   280000 3.35E+02    80000 1.02E+02
4       130000 8.66E+01   330000 2.75E-01    50000 1.14E-02   560000 1.68E-01
4        60000 7.12E-01   200000 8.40E-01   480000 1.08E-04   270000 2.87E-01
4       290000 2.37E-01    10000 5.38E-03   720000 2.15E-02   190000 1.05E+00
4       120000 4.24E-01   250000 1.13E+01   420000 1.70E+01    70000 7.37E-02
4       110000 1.05E+00   410000 2.83E-01   150000 2.26E-01   820000 8.40E-02
4       160000 5.65E-02   340000 7.35E-02   140000 6.36E+00   500000 3.66E+00
```

```
4       730000 1.13E-01   220000 1.08E-02   230000 2.83E-01   740000 2.15E-02
4       400000 2.10E+02        0      0.0
0
END
```

HDA.INP

```
-1
-1
-1
TIT     Prod.  Reactor Target Rod Waste Eval.:  HDA
RDA     PD = 58.24 MW/MTU   E = 3.0
BAS     1 hold-down assembly, no thimble plugs
LIB     0 1 2 3 204 205 206 9 3 0 1 1
PHO     101 102 103 10
LIP     0 0 0
INP     1 1 -1 -1 1 1
BUP
IRP      50.   58.24     1  2  4  2
IRP     100.   58.24     2  3  4  0
IRP     150.   58.24     3  4  4  0
IRP     200.   58.24     4  5  4  0
IRP     250.   58.24     5  6  4  0
IRP     300.   58.24     6  7  4  0
IRP     350.   58.24     7  8  4  0
IRP     400.   58.24     8  9  4  0
IRP     450.   58.24     9 10  4  0
IRP     500.   58.24    10 11  4  0
IRP     510.   58.24    11  1  4  0
BUP
DEC       7.              1  2  4  2
DEC      30.              2  3  4  0
DEC      90.              3  4  4  0
DEC     180.              4  5  4  0
DEC       1.              5  6  5  0
DEC       5.              6  7  5  0
DEC      10.              7  8  5  0
HED     1   Discharge
HED     2    7 Days
HED     3   30 Days
HED     4   90 Days
HED     5  180 Days
HED     6    1 Year
HED     7    5 Years
HED     8   10 Years
OPTL    8 8 8 8 7 8 7 8 7 8 8 8 8 8 8 8 8 8 8 8 8 8 8 8
OPTA    8 8 8 8 7 8 8 8 8 8 8 8 8 8 8 8 8 8 8 8 8 8 8 8
OPTF    8 8 8 8 8 8 8 8 8 8 8 8 8 8 8 8 8 8 8 8 8 8 8 8
CUT     7 1.0E-9 -1
OUT     8  1  0  -1
STP     4
1        30060 0.00E+00    30070 0.00E+00        0      0.0
2       922350  30000.0   922380 970000.0        0      0.0
4       260000 1.64E+03   240000 5.52E+02   280000 5.10E+02    80000 0.00E+00
```

```
4        130000 3.65E+00   330000 0.00E+00    50000 0.00E+00   560000 0.00E+00
4         60000 2.25E+00   200000 0.00E+00   480000 0.00E+00   270000 4.88E+00
4        290000 1.83E+00    10000 0.00E+00   720000 0.00E+00   190000 0.00E+00
4        120000 0.00E+00   250000 5.27E+01   420000 9.70E+00    70000 0.00E+00
4        110000 0.00E+00   410000 4.63E+00   150000 9.80E-01   820000 0.00E+00
4        160000 7.72E-01   340000 0.00E+00   140000 2.02E+01   500000 0.00E+00
4        730000 0.00E+00   220000 1.00E+01   230000 0.00E+00   740000 0.00E+00
4        400000 0.00E+00        0      0.0
0
END
```

SS304.INP

```
-1
-1
-1
TIT     Prod.  Reactor Target Rod Waste Eval.:  ss304
RDA     PD = 58.24 MW/MTU   E = 3.0
BAS     1g of ss304
LIB     0 1 2 3 204 205 206 9 3 0 1 1
PHO     101 102 103 10
LIP     0 0 0
INP     1 1 -1 -1 1 1
BUP
IRP      50.  58.24     1  2  4  2
IRP     100.  58.24     2  3  4  0
IRP     150.  58.24     3  4  4  0
IRP     200.  58.24     4  5  4  0
IRP     250.  58.24     5  6  4  0
IRP     300.  58.24     6  7  4  0
IRP     350.  58.24     7  8  4  0
IRP     400.  58.24     8  9  4  0
IRP     450.  58.24     9 10  4  0
IRP     500.  58.24    10 11  4  0
IRP     510   58.24    11  1  4  0
BUP
DEC       7.             1  2  4  2
DEC      30.             2  3  4  0
DEC      90.             3  4  4  0
DEC     180.             4  5  4  0
DEC       1.             5  6  5  0
DEC       5.             6  7  5  0
DEC      10.             7  8  5  0
HED     1   Discharge
HED     2    7 Days
HED     3   30 Days
HED     4   90 Days
HED     5  180 Days
HED     6    1 Year
HED     7    5 Years
HED     8   10 Years
OPTL    8 8 8 8 7 8 7 8 7 8 8 8 8 8 8 8 8 8 8 8 8 8 8 8
OPTA    8 8 8 8 7 8 8 8 8 8 8 8 8 8 8 8 8 8 8 8 8 8 8 8
```

```
OPTF    8 8 8 8 8 8 8 8 8 8 8 8 8 8 8 8 8 8 8 8 8 8 8 8
CUT     7 1.0E-9 -1
OUT     8  1  0  -1
STP     4
1        30060 0.00E+00    30070 0.00E+00        0       0.0
2       922350  30000.0   922380 970000.0        0       0.0
4       260000 6.56E-01   240000 2.00E-01   280000 1.10E-01    80000 0.00E+00
4       130000 0.00E+00   330000 0.00E+00    50000 0.00E+00   560000 0.00E+00
4        60000 8.00E-04   200000 0.00E+00   480000 0.00E+00   270000 5.00E-04
4       290000 0.00E+00    10000 0.00E+00   720000 0.00E+00   190000 0.00E+00
4       120000 0.00E+00   250000 2.00E-02   420000 3.96E-03    70000 0.00E+00
4       110000 0.00E+00   410000 1.00E-04   150000 4.00E-04   820000 0.00E+00
4       160000 3.00E-04   340000 0.00E+00   140000 7.50E-03   500000 0.00E+00
4       730000 0.00E+00   220000 0.00E+00   230000 0.00E+00   740000 0.00E+00
4       400000 0.00E+00      0.0         0
0
END
```

APPENDIX C

MCNP Input

The MCNP input files are:

TPBAR7.I	TPBAR dose rates, 7 day decay time
TPBAR90.I	TPBAR dose rates, 90 day decay time
TPBAR180.I	TPBAR dose rates, 180 day decay time
TPBAR1.I	TPBAR dose rates, 1 year decay time
TPBAR5.I	TPBAR dose rates, 5 year decay time
HDA7.I	HDA dose rates, 7 day decay time
HDA90.I	HDA dose rates, 90 day decay time
HDA180.I	HDA dose rates, 180 day decay time
HDA1.I	HDA dose rates, 1 year decay time
HAD5.I	HDA dose rates, 5 year decay time

Because many of these input files are similar, only the files TPBAR7.I and HDA7.I are presented.

TPBAR7.I

```
Dose rate, TPBAR, 7 day decay time
999    0        -14:13:12          imp:p=0
10     0         14 -13 -11        imp:p=1
11     1 -8.0    14 -13  11 -10    imp:p=1
12     0         14 -13  10 -12    imp:p=1

10     cz   0.4839    $ cladding OR
11     cz   0.3848    $ cladding IR
12     cz   100.4839 $ 1m tally surface
13     pz   193       $ top of TPBAR
14     pz  -193       $ bottom of TPBAR
20     pz   50        $ tally cutting surface
21     pz  -50        $ tally cutting surface

print    -85
c
c      tallies
c
fc12     Contact dose rate, entire length
f12:p    10
fs12     13 -14
sd12     1174 2r
c
fc22     Contact dose rate, middle 1m
f22:p    10
fs22     20 -21
sd22     304 2r
c
fc32     1m from side, entire length
f32:p    12
fs32     13 -14
sd32     2.437e5 2r
c
fc42     1m from side, middle 1m
f42:p    12
fs42     20 -21
sd42     63136  2r
c
mode     p
prdmp     j j 1 2
nps      1000000
sdef       cel=11 erg=d1 pos=0 0 0 rad=d2
           ext=d3 axs=0 0 1 wgt=3.45e13
si2        0.3848 0.4839
si3        193
c
m1       26000 1
c
c       Photon source
c
c          E, MeV    photons/s
#             si1    sp1
              1        d
```

```
                0.01     7.73E+12
               0.025     6.71E+11
              0.0375     1.80E+11
              0.0575     5.80E+11
               0.085     1.52E+11
               0.125     2.24E+11
               0.225     4.52E+11
               0.375     3.06E+12
               0.575     2.75E+12
                0.85     1.56E+13
                1.25     3.05E+12
                1.75     5.01E+10
                2.25     2.12E+09
                2.75     7.48E+08
                 3.5     5.05E+05
                 5.0     5.21E+03
                 7.0     6.37E-10
                 9.5     4.03E-11
c       TOTAL    3.45E+13
c
c       Flux to Dose conversion from MCNP Manual
c       ANSI/ANS-6.1.1-1977
c
c       E, MeV      (rem/hr)/(photons/cm2/s)
#         de0         df0
          0.01        3.96e-6
          0.03        5.82e-7
          0.05        2.90e-7
          0.07        2.58e-7
          0.1         2.83e-7
          0.15        3.79e-7
          0.2         5.01e-7
          0.25        6.31e-7
          0.3         7.59e-7
          0.35        8.78e-7
          0.4         9.85e-7
          0.45        1.08e-6
          0.5         1.17e-6
          0.55        1.27e-6
          0.6         1.36e-6
          0.65        1.44e-6
          0.7         1.52e-6
          0.8         1.68e-6
          1.0         1.98e-6
          1.4         2.51e-6
          1.8         2.99e-6
          2.2         3.42e-6
          2.6         3.82e-6
          2.8         4.01e-6
          3.25        4.41e-6
          3.75        4.83e-6
          4.25        5.23e-6
          4.75        5.60e-6
          5.0         5.80e-6
          5.25        6.01e-6
```

```
          5.75        6.37e-6
          6.25        6.74e-6
          6.75        7.11e-6
          7.5         7.66e-6
          9.0         8.77e-6
          11.0        1.03e-5
          13.0        1.18e-5
          15.0        1.33e-5
```

HDA7.I

```
Dose rate, entire hold-down assembly, 7 day decay time
999    0          -40:42:35     imp:p=0
10     1 -8.0     41 -42 -35    imp:p=1  $ plate
20     1 -8.0    -41  40 -10    imp:p=1  $ thimble plug
22     1 -8.0    -41  40 -11    imp:p=1  $ thimble plug
24     1 -8.0    -41  40 -12    imp:p=1  $ thimble plug
26     0          40 -41 -13    imp:p=1  $ void
27     0          40 -41 -14    imp:p=1  $ void
28     1 -8.0    -41  40 -15    imp:p=1  $ thimble plug
30     1 -8.0    -41  40 -16    imp:p=1  $ thimble plug
32     1 -8.0    -41  40 -17    imp:p=1  $ thimble plug
34     1 -8.0    -41  40 -18    imp:p=1  $ thimble plug
36     1 -8.0    -41  40 -19    imp:p=1  $ thimble plug
38     1 -8.0    -41  40 -20    imp:p=1  $ thimble plug
40     1 -8.0    -41  40 -21    imp:p=1  $ thimble plug
43     0          40 -41 -22    imp:p=1  $ center void
44     1 -8.0    -41  40 -23    imp:p=1  $ thimble plug
46     1 -8.0    -41  40 -24    imp:p=1  $ thimble plug
48     1 -8.0    -41  40 -25    imp:p=1  $ thimble plug
50     1 -8.0    -41  40 -26    imp:p=1  $ thimble plug
52     1 -8.0    -41  40 -27    imp:p=1  $ thimble plug
54     1 -8.0    -41  40 -28    imp:p=1  $ thimble plug
56     1 -8.0    -41  40 -29    imp:p=1  $ thimble plug
58     0          40 -41 -30    imp:p=1  $ void
59     0          40 -41 -31    imp:p=1  $ void
60     1 -8.0    -41  40 -32    imp:p=1  $ thimble plug
62     1 -8.0    -41  40 -33    imp:p=1  $ thimble plug
64     1 -8.0    -41  40 -34    imp:p=1  $ thimble plug
66     0          10 11 12 13 14 15 16 17  $ void between plugs
                  18 19 20 21 22 23 24 25
                  26 27 28 29 30 31 32 33
                  34
                 -35 40 -41 imp:p=1

c      20 thimble plugs, 4 TPBAR voids, 1 instrument tube void
10     c/z -3.78  7.56 0.5
11     c/z  0     7.56 0.5
12     c/z  3.78  7.56 0.5
13     c/z -6.3   6.3  0.5  $ TPBAR void
14     c/z  6.3   6.3  0.5  $ TPBAR void
15     c/z -7.56  3.78 0.5
16     c/z -3.78  3.78 0.5
17     c/z  0     3.78 0.5
18     c/z  3.78  3.78 0.5
```

```
19     c/z  7.56 -3.78 0.5
20     c/z -7.56  0    0.5
21     c/z -3.78  0    0.5
22     cz              0.5  $ instrument tube void
23     c/z  3.78  0    0.5
24     c/z  7.56  0    0.5
25     c/z -7.56 -3.78 0.5
26     c/z -3.78 -3.78 0.5
27     c/z  0    -3.78 0.5
28     c/z  3.78 -3.78 0.5
29     c/z  7.56 -3.78 0.5
30     c/z -6.3  -6.3  0.5  TPBAR void
31     c/z  6.3  -6.3  0.5  TPBAR void
32     c/z -3.78 -7.56 0.5
33     c/z  0    -7.56 0.5
34     c/z  3.78 -7.56 0.5
c      hold-down plate
35     cz    12
c
40     pz   -16   $ bottom of thimble plug
41     pz    0    $ bottom of plate
42     pz    0.7  $ top of plate

c
m1      26000  1
c
print    -85
c
c      tallies
c
fc12     Top of Plate
f12:p    42
fs12     -35
sd12     452.4 1r
c
fc22     Bottom of Assembly
f22:p    40
fs22     -35
sd22     452.4 1r
c
fc32     Side of Assembly
f32:p    35
fs32     42 -40
sd32     1259 2r
c
mode    p
prdmp    j j 1 2
nps     1000000
sdef      cel=d10 erg=fcel=d20 pos=fcel=d30 rad=fcel=d40
          ext=fcel=d50 axs=0 0 1  wgt=5.1e13
si10     1 10                        $ plate
           20 22 24 28 30 32 34 36   $ thimble plugs
           38 40 44 46 48 50 52 54
           56 60 62 64
sp10      1.13e13 1.99e12 19r
```

```
ds20      s 21 22 19r
ds30      l   0  0  0.35
             -3.78  7.56 -8      0  7.56 -8
              3.78  7.56 -8  -7.56  3.78 -8
             -3.78  3.78 -8      0  3.78 -8
              3.78  3.78 -8   7.56  3.78 -8
             -7.56     0 -8  -3.78     0 -8
              3.78     0 -8   7.56     0 -8
             -7.56 -3.78 -8  -3.78 -3.78 -8
                 0 -3.78 -8   3.78 -3.78 -8
              7.56 -3.78 -8  -3.78 -7.56 -8
                 0 -7.56 -8   3.78 -7.56 -8
ds40     s 41 42 19r
si41       12
si42       0.5
ds50     s 51 52 19r
si51       0.35
si52       8
c
c       Photon source
c         Plate                      Thimble Plugs
c         E, MeV    photons/s        E, MeV    photons/s
#            si21     sp21              si22      sp22
                l        d                 l         d
            0.01   2.76E+12          0.01   6.95E+11
           0.025   4.42E+10         0.025   6.68E+09
          0.0375   2.73E+10        0.0375   4.25E+09
          0.0575   3.48E+10        0.0575   5.49E+09
           0.085   1.80E+10         0.085   2.97E+09
           0.125   1.21E+10         0.125   2.36E+09
           0.225   1.31E+10         0.225   2.53E+09
           0.375   1.62E+12         0.375   4.40E+11
           0.575   4.05E+11         0.575   6.56E+10
            0.85   2.21E+12          0.85   4.50E+11
            1.25   4.01E+12          1.25   3.13E+11
            1.75   7.50E+09          1.75   1.21E+09
            2.25   2.12E+07          2.25   1.66E+06
            2.75   4.76E+05          2.75   5.13E+03
             3.5   2.81E+02           3.5   1.32E-05
               5   2.92E+00             5   1.38E-07
               7   0.00E+00             7   0.00E+00
             9.5   0.00E+00           9.5   0.00E+00
c       TOTAL      1.12E+13                 1.99E+12
c       Grand      5.10E+13
c        Flux to Dose conversion from MCNP Manual
c        ANSI/ANS-6.1.1-1977
c
c        E, MeV      (rem/hr)/(photons/cm2/s)
#          de0         df0
          0.01        3.96e-6
          0.03        5.82e-7
          0.05        2.90e-7
          0.07        2.58e-7
          0.1         2.83e-7
          0.15        3.79e-7
```

0.2	5.01e-7
0.25	6.31e-7
0.3	7.59e-7
0.35	8.78e-7
0.4	9.85e-7
0.45	1.08e-6
0.5	1.17e-6
0.55	1.27e-6
0.6	1.36e-6
0.65	1.44e-6
0.7	1.52e-6
0.8	1.68e-6
1.0	1.98e-6
1.4	2.51e-6
1.8	2.99e-6
2.2	3.42e-6
2.6	3.82e-6
2.8	4.01e-6
3.25	4.41e-6
3.75	4.83e-6
4.25	5.23e-6
4.75	5.60e-6
5.0	5.80e-6
5.25	6.01e-6
5.75	6.37e-6
6.25	6.74e-6
6.75	7.11e-6
7.5	7.66e-6
9.0	8.77e-6
11.0	1.03e-5
13.0	1.18e-5
15.0	1.33e-5

APPENDIX D

Trace Isotope Concentrations

ORIGEN2 output does not report a complete list of radionuclides generated by irradiation as this list would be quite long. Rather, the code provides a threshold value below which concentrations are not reported. For the standard cases, the threshold is set at a value such that any radionuclide whose value is nine orders of magnitude below the total for the TPBAR, Hold-Down Assembly, or Single Thimble Plug is not reported. In most cases this is sufficient to identify important radionuclides of concern. However, parent-daughter products (such as Sr-90 and Y-90) may not both be displayed if one of the radionuclides does not meet the threshold requirements.

Additionally, the calculated ORIGEN2 cases (described in Appendix B) use the power irradiation option to generate the irradiation profile of the components. Power irradiation assumes uranium isotopes to be contained in fuel pins, not trace uranium contained in the metal components of a TPBAR, Hold-Down Assembly, or Single Thimble Plug. Therefore, fission products generated in the ORIGEN2 output for these cases are for fuel pins. Based upon the threshold output value for these standard cases it would not be expected to see the fission products from uranium impurities in the TPBAR, Hold-Down Assembly, or Single Thimble Plug, so the absence from the standard calculations is of no concern.

There are applications, however, where it is necessary to know the concentrations of trace radionuclides generated either from irradiation or from fission of uranium in metal components. A trace radionuclide is defined for the purposes of this calculation as a concentration greater than one picocurie. Table D1 provides a list of these trace radionuclides for the TPBAR excluding tritium.

Table D1. Trace Radionuclide Concentrations in a TPBAR (Ci/TPBAR)

Nuclide	7 Days	30 Days	90 Days	180 Days	1 Year	5 Years	10 Years
BE 10	3.76E-09	3.76E-09	3.76E-09	3.76E-09	3.76E-09	3.76E-09	3.76E-09
C 14	1.42E-03	1.42E-03	1.42E-03	1.42E-03	1.42E-03	1.42E-03	1.42E-03
NA 24	1.71E-02	1.43E-13	0.00E+00	0.00E+00	0.00E+00	0.00E+00	0.00E+00
MG 28	1.53E-10	1.73E-18	0.00E+00	0.00E+00	0.00E+00	0.00E+00	0.00E+00
AL 28	1.53E-10	1.73E-18	0.00E+00	0.00E+00	0.00E+00	0.00E+00	0.00E+00
SI 32	5.76E-10	5.76E-10	5.76E-10	5.76E-10	5.76E-10	5.73E-10	5.70E-10
P 32	9.13E-01	2.99E-01	1.63E-02	2.08E-04	2.68E-08	5.73E-10	5.70E-10
P 33	1.90E-05	1.01E-05	1.90E-06	1.57E-07	9.23E-10	2.36E-27	0.00E+00
S 35	2.77E-01	2.31E-01	1.44E-01	7.08E-02	1.65E-02	1.65E-07	9.36E-14
CL 36	7.09E-05	7.09E-05	7.09E-05	7.09E-05	7.09E-05	7.09E-05	7.09E-05
AR 37	3.40E-01	2.15E-01	6.57E-02	1.11E-02	2.83E-04	7.84E-17	1.57E-32
AR 39	9.48E-03	9.48E-03	9.47E-03	9.47E-03	9.46E-03	9.36E-03	9.24E-03
AR 42	7.78E-12	7.77E-12	7.74E-12	7.70E-12	7.62E-12	7.01E-12	6.31E-12
K 40	3.03E-08	3.03E-08	3.03E-08	3.03E-08	3.03E-08	3.03E-08	3.03E-08
K 42	1.89E-04	7.77E-12	7.74E-12	7.70E-12	7.62E-12	7.01E-12	6.31E-12
K 43	1.37E-06	6.08E-14	4.01E-33	0.00E+00	0.00E+00	0.00E+00	0.00E+00

Nuclide	7 Days	30 Days	90 Days	180 Days	1 Year	5 Years	10 Years
CA 41	7.50E-05	7.50E-05	7.50E-05	7.50E-05	7.50E-05	7.50E-05	7.50E-05
CA 45	2.99E-01	2.71E-01	2.10E-01	1.43E-01	6.52E-02	1.30E-04	5.52E-08
CA 47	1.36E-04	4.05E-06	4.23E-10	4.50E-16	2.28E-28	0.00E+00	0.00E+00
SC 46	7.79E-03	6.44E-03	3.92E-03	1.86E-03	4.02E-04	2.27E-09	6.24E-16
SC 47	4.93E-04	1.53E-05	1.62E-09	1.72E-15	8.74E-28	0.00E+00	0.00E+00
SC 48	1.13E-05	1.83E-09	2.32E-19	3.33E-34	0.00E+00	0.00E+00	0.00E+00
CR 51	8.61E+02	4.84E+02	1.08E+02	1.14E+01	1.10E-01	1.48E-17	2.11E-37
MN 54	4.09E+01	3.88E+01	3.40E+01	2.78E+01	1.85E+01	7.22E-01	1.26E-02
FE 55	2.13E+02	2.10E+02	2.01E+02	1.88E+02	1.64E+02	5.65E+01	1.49E+01
FE 59	1.79E+01	1.26E+01	5.00E+00	1.25E+00	7.20E-02	1.21E-11	7.36E-24
CO 58	2.57E+02	2.05E+02	1.14E+02	4.73E+01	7.70E+00	4.70E-06	8.03E-14
CO 60	3.58E+01	3.55E+01	3.48E+01	3.37E+01	3.15E+01	1.86E+01	9.64E+00
NI 59	1.68E-01	1.68E-01	1.68E-01	1.68E-01	1.68E-01	1.68E-01	1.68E-01
NI 63	2.28E+01	2.28E+01	2.28E+01	2.27E+01	2.27E+01	2.20E+01	2.12E+01
NI 66	1.14E-04	1.03E-07	1.19E-15	1.48E-27	0.00E+00	0.00E+00	0.00E+00
CU 64	1.10E-03	9.03E-17	0.00E+00	0.00E+00	0.00E+00	0.00E+00	0.00E+00
CU 66	1.14E-04	1.03E-07	1.19E-15	1.48E-27	0.00E+00	0.00E+00	0.00E+00
CU 67	1.12E-06	2.30E-09	2.26E-16	6.98E-27	0.00E+00	0.00E+00	0.00E+00
ZN 65	4.00E-03	3.75E-03	3.16E-03	2.45E-03	1.45E-03	2.27E-05	1.27E-07
ZN 69	1.09E-12	9.19E-25	0.00E+00	0.00E+00	0.00E+00	0.00E+00	0.00E+00
ZN 69M	1.02E-12	8.56E-25	0.00E+00	0.00E+00	0.00E+00	0.00E+00	0.00E+00
ZN 72	5.87E-09	1.57E-12	7.46E-22	7.75E-36	0.00E+00	0.00E+00	0.00E+00
GA 72	8.45E-09	2.25E-12	1.07E-21	1.12E-35	0.00E+00	0.00E+00	0.00E+00
GA 73	5.74E-18	0.00E+00	0.00E+00	0.00E+00	0.00E+00	0.00E+00	0.00E+00
GE 73M	5.74E-18	0.00E+00	0.00E+00	0.00E+00	0.00E+00	0.00E+00	0.00E+00
GE 77	2.47E-11	4.88E-26	0.00E+00	0.00E+00	0.00E+00	0.00E+00	0.00E+00
AS 76	7.57E-01	3.68E-07	1.25E-23	0.00E+00	0.00E+00	0.00E+00	0.00E+00
AS 77	1.11E-07	5.82E-12	3.93E-23	0.00E+00	0.00E+00	0.00E+00	0.00E+00
SE 75	8.38E-01	7.33E-01	5.18E-01	3.08E-01	1.05E-01	2.25E-05	5.78E-10
SE 77M	2.76E-10	1.44E-14	9.75E-26	0.00E+00	0.00E+00	0.00E+00	0.00E+00
SE 79	8.52E-06	8.52E-06	8.52E-06	8.52E-06	8.52E-06	8.52E-06	8.52E-06
BR 80	6.00E-12	0.00E+00	0.00E+00	0.00E+00	0.00E+00	0.00E+00	0.00E+00
BR 80M	5.61E-12	0.00E+00	0.00E+00	0.00E+00	0.00E+00	0.00E+00	0.00E+00
BR 82	1.75E-01	3.43E-06	1.81E-18	7.47E-37	0.00E+00	0.00E+00	0.00E+00
KR 79	4.01E-07	6.94E-12	2.63E-24	0.00E+00	0.00E+00	0.00E+00	0.00E+00
KR 81	1.60E-06	1.60E-06	1.60E-06	1.60E-06	1.60E-06	1.60E-06	1.60E-06
KR 85	9.11E-06	9.07E-06	8.97E-06	8.83E-06	8.55E-06	6.60E-06	4.78E-06
KR 85M	7.87E-16	0.00E+00	0.00E+00	0.00E+00	0.00E+00	0.00E+00	0.00E+00
RB 86	7.35E-07	3.13E-07	3.37E-08	1.19E-09	1.22E-12	0.00E+00	0.00E+00
RB 87	6.12E-15	6.12E-15	6.12E-15	6.12E-15	6.12E-15	6.12E-15	6.12E-15
SR 89	6.86E-02	5.01E-02	2.20E-02	6.39E-03	5.02E-04	9.81E-13	1.27E-23
SR 90	2.22E-05	2.22E-05	2.21E-05	2.20E-05	2.17E-05	1.97E-05	1.75E-05
SR 91	7.17E-08	2.31E-25	0.00E+00	0.00E+00	0.00E+00	0.00E+00	0.00E+00
Y 89M	4.76E-04	3.62E-06	1.08E-11	5.55E-20	0.00E+00	0.00E+00	0.00E+00
Y 90	4.45E-01	1.15E-03	2.21E-05	2.20E-05	2.17E-05	1.98E-05	1.75E-05

Nuclide	7 Days	30 Days	90 Days	180 Days	1 Year	5 Years	10 Years
Y 91	1.76E-01	1.34E-01	6.59E-02	2.27E-02	2.53E-03	7.68E-11	3.08E-20
Y 91M	2.05E-09	6.61E-27	0.00E+00	0.00E+00	0.00E+00	0.00E+00	0.00E+00
Y 92	1.72E-17	0.00E+00	0.00E+00	0.00E+00	0.00E+00	0.00E+00	0.00E+00
Y 93	1.02E-08	3.61E-25	0.00E+00	0.00E+00	0.00E+00	0.00E+00	0.00E+00
ZR 89	4.77E-04	3.63E-06	1.08E-11	5.56E-20	5.04E-37	0.00E+00	0.00E+00
ZR 93	1.13E-04	1.13E-04	1.13E-04	1.13E-04	1.13E-04	1.13E-04	1.13E-04
ZR 95	6.03E+01	4.70E+01	2.45E+01	9.25E+00	1.24E+00	1.66E-07	4.25E-16
ZR 97	9.67E-02	1.42E-11	0.00E+00	0.00E+00	0.00E+00	0.00E+00	0.00E+00
NB 92	2.67E-01	5.56E-02	9.27E-04	2.00E-06	6.49E-12	0.00E+00	0.00E+00
NB 93M	3.83E-06	4.16E-06	5.02E-06	6.29E-06	8.85E-06	2.69E-05	4.49E-05
NB 94	4.75E-04	4.75E-04	4.75E-04	4.75E-04	4.75E-04	4.75E-04	4.75E-04
NB 95	6.51E+01	6.07E+01	4.11E+01	1.83E+01	2.70E+00	3.69E-07	9.43E-16
NB 95M	4.41E-01	3.49E-01	1.82E-01	6.86E-02	9.23E-03	1.23E-09	3.15E-18
NB 96	9.87E-04	7.55E-11	2.06E-29	0.00E+00	0.00E+00	0.00E+00	0.00E+00
NB 97	9.75E-02	1.53E-11	0.00E+00	0.00E+00	0.00E+00	0.00E+00	0.00E+00
NB 97M	9.19E-02	1.35E-11	0.00E+00	0.00E+00	0.00E+00	0.00E+00	0.00E+00
MO 93M	5.03E-09	0.00E+00	0.00E+00	0.00E+00	0.00E+00	0.00E+00	0.00E+00
MO 93	1.04E-03	1.04E-03	1.04E-03	1.04E-03	1.04E-03	1.03E-03	1.03E-03
MO 99	1.46E+01	4.43E-02	1.20E-08	1.68E-18	0.00E+00	0.00E+00	0.00E+00
TC 98	1.58E-11	1.58E-11	1.58E-11	1.58E-11	1.58E-11	1.58E-11	1.58E-11
TC 99	4.34E-05	4.35E-05	4.35E-05	4.35E-05	4.35E-05	4.35E-05	4.35E-05
TC 99M	2.36E-04	7.16E-07	1.94E-13	2.73E-23	0.00E+00	0.00E+00	0.00E+00
RU103	4.22E-03	2.81E-03	9.75E-04	1.99E-04	7.58E-06	4.83E-17	4.88E-31
RU105	4.83E-15	0.00E+00	0.00E+00	0.00E+00	0.00E+00	0.00E+00	0.00E+00
RU106	4.61E-04	4.41E-04	3.94E-04	3.33E-04	2.35E-04	1.50E-05	4.81E-07
RH102	5.31E-10	5.23E-10	5.03E-10	4.74E-10	4.20E-10	1.61E-10	4.89E-11
RH103M	1.16E-03	7.76E-04	2.69E-04	5.50E-05	2.09E-06	1.33E-17	1.35E-31
RH105	4.29E-05	8.58E-10	4.73E-22	0.00E+00	0.00E+00	0.00E+00	0.00E+00
RH105M	1.36E-15	0.00E+00	0.00E+00	0.00E+00	0.00E+00	0.00E+00	0.00E+00
RH106	4.61E-04	4.41E-04	3.94E-04	3.33E-04	2.35E-04	1.50E-05	4.81E-07
PD107	7.55E-11	7.55E-11	7.55E-11	7.55E-11	7.55E-11	7.55E-11	7.55E-11
PD109	6.72E-08	3.04E-20	0.00E+00	0.00E+00	0.00E+00	0.00E+00	0.00E+00
PD111	5.74E-16	0.00E+00	0.00E+00	0.00E+00	0.00E+00	0.00E+00	0.00E+00
PD111M	7.87E-16	0.00E+00	0.00E+00	0.00E+00	0.00E+00	0.00E+00	0.00E+00
PD112	1.28E-07	6.92E-16	2.19E-37	0.00E+00	0.00E+00	0.00E+00	0.00E+00
AG106	5.17E-11	7.92E-12	5.94E-14	3.86E-17	1.06E-23	0.00E+00	0.00E+00
AG108	3.03E-11	3.03E-11	3.02E-11	3.02E-11	3.01E-11	2.95E-11	2.87E-11
AG108M	3.40E-10	3.40E-10	3.40E-10	3.39E-10	3.38E-10	3.31E-10	3.22E-10
AG109M	5.98E-06	5.72E-06	5.23E-06	4.57E-06	3.47E-06	3.91E-07	2.55E-08
AG110	4.41E-08	4.14E-08	3.50E-08	2.73E-08	1.63E-08	2.84E-10	1.79E-12
AG110M	3.32E-06	3.11E-06	2.63E-06	2.05E-06	1.23E-06	2.13E-08	1.35E-10
AG111	4.30E-05	5.06E-06	1.90E-08	4.40E-12	1.44E-19	0.00E+00	0.00E+00
AG111M	8.24E-16	0.00E+00	0.00E+00	0.00E+00	0.00E+00	0.00E+00	0.00E+00
AG112	1.52E-07	8.20E-16	0.00E+00	0.00E+00	0.00E+00	0.00E+00	0.00E+00
AG113	8.48E-15	0.00E+00	0.00E+00	0.00E+00	0.00E+00	0.00E+00	0.00E+00

Nuclide	7 Days	30 Days	90 Days	180 Days	1 Year	5 Years	10 Years
CD109	5.92E-06	5.72E-06	5.23E-06	4.57E-06	3.47E-06	3.91E-07	2.55E-08
CD113M	3.55E-08	3.54E-08	3.51E-08	3.47E-08	3.39E-08	2.80E-08	2.21E-08
CD115	2.55E-04	1.99E-07	1.56E-15	1.08E-27	0.00E+00	0.00E+00	0.00E+00
CD115M	1.68E-04	1.18E-04	4.62E-05	1.14E-05	6.41E-07	8.81E-17	4.14E-29
IN113M	1.23E+00	1.07E+00	7.48E-01	4.35E-01	1.43E-01	2.15E-05	3.61E-10
IN114	1.17E-01	8.46E-02	3.65E-02	1.04E-02	7.75E-04	1.02E-12	8.01E-24
IN114M	1.22E-01	8.84E-02	3.82E-02	1.08E-02	8.09E-04	1.06E-12	8.37E-24
IN115	1.03E-20	1.04E-20	1.06E-20	1.07E-20	1.07E-20	1.07E-20	1.07E-20
IN115M	2.51E-06	2.04E-09	3.35E-11	8.27E-12	4.65E-13	6.38E-23	2.96E-35
SN113	1.23E+00	1.07E+00	7.48E-01	4.35E-01	1.43E-01	2.15E-05	3.60E-10
SN117M	7.22E+00	2.31E+00	1.19E-01	1.38E-03	1.44E-07	0.00E+00	0.00E+00
SN119M	8.16E+00	7.65E+00	6.45E+00	5.00E+00	2.96E+00	4.75E-02	2.71E-04
SN121	6.40E-02	4.03E-08	2.70E-24	0.00E+00	0.00E+00	0.00E+00	0.00E+00
SN121M	5.52E-04	5.52E-04	5.51E-04	5.49E-04	5.45E-04	5.15E-04	4.81E-04
SN123	4.53E-01	4.00E-01	2.90E-01	1.79E-01	6.62E-02	2.61E-05	1.44E-09
SN125	1.93E+00	3.69E-01	4.93E-03	7.65E-06	1.26E-11	0.00E+00	0.00E+00
SN126	4.33E-10	4.33E-10	4.33E-10	4.33E-10	4.33E-10	4.33E-10	4.33E-10
SB122	9.51E-02	2.59E-04	5.31E-11	4.91E-21	0.00E+00	0.00E+00	0.00E+00
SB124	1.75E-02	1.35E-02	6.74E-03	2.39E-03	2.83E-04	1.40E-11	1.03E-20
SB125	1.66E+00	1.65E+00	1.59E+00	1.49E+00	1.31E+00	4.82E-01	1.38E-01
SB126	4.95E-02	1.37E-02	4.78E-04	3.12E-06	1.59E-10	6.06E-11	6.06E-11
SB126M	4.33E-10	4.33E-10	4.33E-10	4.33E-10	4.33E-10	4.33E-10	4.33E-10
SB127	3.14E-05	5.00E-07	1.02E-11	9.31E-19	3.04E-33	0.00E+00	0.00E+00
SB128	3.80E-11	1.38E-29	0.00E+00	0.00E+00	0.00E+00	0.00E+00	0.00E+00
SB129	5.98E-16	0.00E+00	0.00E+00	0.00E+00	0.00E+00	0.00E+00	0.00E+00
TE123M	2.88E-03	2.52E-03	1.78E-03	1.06E-03	3.61E-04	7.64E-08	1.95E-12
TE125M	3.30E-01	3.42E-01	3.57E-01	3.53E-01	3.19E-01	1.18E-01	3.37E-02
TE127	6.64E-05	3.20E-05	2.15E-05	1.21E-05	3.74E-06	3.45E-10	3.12E-15
TE127M	3.71E-05	3.22E-05	2.20E-05	1.24E-05	3.82E-06	3.52E-10	3.19E-15
TE129	5.02E-05	3.13E-05	9.07E-06	1.42E-06	3.10E-08	2.52E-21	0.00E+00
TE129M	7.72E-05	4.80E-05	1.39E-05	2.18E-06	4.76E-08	3.88E-21	1.69E-37
TE131	5.95E-07	1.72E-12	6.11E-27	0.00E+00	0.00E+00	0.00E+00	0.00E+00
TE131M	2.64E-06	7.64E-12	2.71E-26	0.00E+00	0.00E+00	0.00E+00	0.00E+00
TE132	2.63E-04	1.97E-06	5.64E-12	2.73E-20	2.25E-37	0.00E+00	0.00E+00
I129	6.19E-11	6.21E-11	6.23E-11	6.23E-11	6.23E-11	6.23E-11	6.23E-11
I130	9.21E-09	3.32E-22	0.00E+00	0.00E+00	0.00E+00	0.00E+00	0.00E+00
I131	4.73E-04	6.52E-05	3.70E-07	1.58E-10	1.83E-17	0.00E+00	0.00E+00
I132	2.71E-04	2.03E-06	5.81E-12	2.81E-20	0.00E+00	0.00E+00	0.00E+00
I133	6.06E-06	6.22E-14	8.98E-35	0.00E+00	0.00E+00	0.00E+00	0.00E+00
I135	3.37E-11	0.00E+00	0.00E+00	0.00E+00	0.00E+00	0.00E+00	0.00E+00
XE127	7.86E-05	5.08E-05	1.62E-05	2.92E-06	8.59E-08	7.17E-20	5.72E-35
XE129M	5.31E-03	7.23E-04	4.00E-06	1.64E-09	1.76E-16	0.00E+00	0.00E+00
XE131M	1.21E-05	4.52E-06	1.74E-07	9.62E-10	1.99E-14	0.00E+00	0.00E+00
XE133	7.57E-04	3.66E-05	1.32E-08	9.01E-14	2.10E-24	0.00E+00	0.00E+00
XE133M	8.53E-06	5.96E-09	3.37E-17	1.43E-29	0.00E+00	0.00E+00	0.00E+00

Nuclide	7 Days	30 Days	90 Days	180 Days	1 Year	5 Years	10 Years
XE135	1.16E-08	6.10E-27	0.00E+00	0.00E+00	0.00E+00	0.00E+00	0.00E+00
XE135M	5.40E-12	0.00E+00	0.00E+00	0.00E+00	0.00E+00	0.00E+00	0.00E+00
CS131	4.51E-02	2.06E-02	1.02E-03	6.44E-06	1.32E-10	0.00E+00	0.00E+00
CS132	1.03E-07	8.78E-09	1.43E-11	9.32E-16	2.27E-24	0.00E+00	0.00E+00
CS134	6.66E-05	6.52E-05	6.17E-05	5.68E-05	4.79E-05	1.25E-05	2.32E-06
CS135	9.73E-11	9.73E-11	9.73E-11	9.73E-11	9.73E-11	9.73E-11	9.73E-11
CS136	2.01E-05	5.96E-06	2.49E-07	2.13E-09	1.18E-13	0.00E+00	0.00E+00
CS137	4.19E-05	4.19E-05	4.17E-05	4.15E-05	4.10E-05	3.74E-05	3.33E-05
BA131	3.23E-02	8.36E-03	2.47E-04	1.25E-06	2.37E-11	0.00E+00	0.00E+00
BA133	7.40E-04	7.37E-04	7.29E-04	7.18E-04	6.94E-04	5.36E-04	3.89E-04
BA133M	3.16E-05	1.69E-09	1.20E-20	2.26E-37	0.00E+00	0.00E+00	0.00E+00
BA135M	2.40E-04	3.88E-10	3.04E-25	0.00E+00	0.00E+00	0.00E+00	0.00E+00
BA136M	3.31E-06	9.82E-07	4.11E-08	3.51E-10	1.95E-14	0.00E+00	0.00E+00
BA137M	3.97E-05	3.96E-05	3.95E-05	3.92E-05	3.88E-05	3.53E-05	3.15E-05
BA140	9.03E-04	2.60E-04	1.01E-05	7.65E-08	3.34E-12	0.00E+00	0.00E+00
LA138	2.71E-20	2.71E-20	2.71E-20	2.71E-20	2.71E-20	2.71E-20	2.71E-20
LA140	1.37E-03	2.99E-04	1.16E-05	8.81E-08	3.84E-12	0.00E+00	0.00E+00
LA141	1.84E-16	0.00E+00	0.00E+00	0.00E+00	0.00E+00	0.00E+00	0.00E+00
CE141	1.08E-03	6.63E-04	1.84E-04	2.71E-05	5.21E-07	1.55E-20	1.91E-37
CE142	9.97E-15	9.97E-15	9.97E-15	9.97E-15	9.97E-15	9.97E-15	9.97E-15
CE143	3.24E-05	2.99E-10	2.18E-23	0.00E+00	0.00E+00	0.00E+00	0.00E+00
CE144	6.43E-04	6.08E-04	5.25E-04	4.22E-04	2.68E-04	7.61E-06	8.86E-08
PR142	9.80E-08	2.02E-16	0.00E+00	0.00E+00	0.00E+00	0.00E+00	0.00E+00
PR143	8.34E-04	2.59E-04	1.21E-05	1.21E-07	9.40E-12	0.00E+00	0.00E+00
PR144	6.43E-04	6.08E-04	5.25E-04	4.22E-04	2.68E-04	7.61E-06	8.86E-08
PR144M	7.72E-06	7.29E-06	6.30E-06	5.06E-06	3.22E-06	9.14E-08	1.06E-09
ND144	2.84E-19	2.97E-19	3.28E-19	3.66E-19	4.23E-19	5.20E-19	5.22E-19
PR145	2.70E-12	0.00E+00	0.00E+00	0.00E+00	0.00E+00	0.00E+00	0.00E+00
PM146	1.19E-09	1.18E-09	1.16E-09	1.12E-09	1.05E-09	6.35E-10	3.38E-10
SM146	2.82E-17	2.85E-17	2.92E-17	3.02E-17	3.22E-17	4.43E-17	5.30E-17
ND147	3.27E-04	7.73E-05	1.80E-06	6.39E-09	5.80E-14	0.00E+00	0.00E+00
PM147	6.65E-05	6.83E-05	6.62E-05	6.21E-05	5.43E-05	1.89E-05	5.04E-06
SM147	2.95E-16	3.23E-16	3.95E-16	4.97E-16	6.88E-16	1.56E-15	1.90E-15
PM148	7.20E-05	4.16E-06	1.85E-07	4.03E-08	1.80E-09	4.03E-20	1.96E-33
PM148M	1.31E-05	8.88E-06	3.24E-06	7.16E-07	3.20E-08	7.15E-19	3.48E-32
SM148	1.45E-20	1.46E-20	1.47E-20	1.48E-20	1.48E-20	1.48E-20	1.48E-20
PM149	5.60E-05	4.15E-08	2.83E-16	1.60E-28	0.00E+00	0.00E+00	0.00E+00
EU150	3.42E-15	3.41E-15	3.40E-15	3.39E-15	3.35E-15	3.10E-15	2.82E-15
PM151	3.06E-06	4.29E-12	2.31E-27	0.00E+00	0.00E+00	0.00E+00	0.00E+00
SM151	1.94E-07	1.94E-07	1.94E-07	1.94E-07	1.93E-07	1.87E-07	1.80E-07
EU152	1.88E-09	1.88E-09	1.86E-09	1.84E-09	1.79E-09	1.46E-09	1.13E-09
EU152M	2.02E-13	2.99E-31	0.00E+00	0.00E+00	0.00E+00	0.00E+00	0.00E+00
SM153	3.02E-05	8.35E-09	4.35E-18	5.17E-32	0.00E+00	0.00E+00	0.00E+00
GD153	1.46E-08	1.37E-08	1.16E-08	8.92E-09	5.25E-09	7.99E-11	4.28E-13
EU154	4.56E-06	4.53E-06	4.48E-06	4.39E-06	4.21E-06	3.05E-06	2.04E-06

Nuclide	7 Days	30 Days	90 Days	180 Days	1 Year	5 Years	10 Years
EU155	3.08E-06	3.05E-06	2.98E-06	2.88E-06	2.68E-06	1.53E-06	7.62E-07
SM156	1.14E-10	2.40E-28	0.00E+00	0.00E+00	0.00E+00	0.00E+00	0.00E+00
EU156	1.02E-04	3.58E-05	2.32E-06	3.81E-08	8.09E-12	0.00E+00	0.00E+00
EU157	1.38E-08	1.61E-19	0.00E+00	0.00E+00	0.00E+00	0.00E+00	0.00E+00
GD159	1.40E-08	1.63E-17	0.00E+00	0.00E+00	0.00E+00	0.00E+00	0.00E+00
TB160	7.71E-07	6.19E-07	3.48E-07	1.47E-07	2.49E-08	2.06E-14	5.12E-22
TB161	8.00E-07	7.99E-08	1.96E-10	2.39E-14	2.09E-22	0.00E+00	0.00E+00
DY166	8.97E-09	8.20E-11	3.94E-16	4.14E-24	0.00E+00	0.00E+00	0.00E+00
HO166	1.47E-08	1.22E-10	5.86E-16	6.17E-24	0.00E+00	0.00E+00	0.00E+00
HO166M	1.53E-12	1.53E-12	1.53E-12	1.53E-12	1.53E-12	1.52E-12	1.52E-12
ER169	1.58E-10	2.90E-11	3.48E-13	4.57E-16	5.34E-22	0.00E+00	0.00E+00
TM170	3.20E-11	2.82E-11	2.04E-11	1.26E-11	4.63E-12	1.76E-15	9.34E-20
TM171	5.22E-13	5.10E-13	4.81E-13	4.40E-13	3.66E-13	8.64E-14	1.42E-14
TM172	6.04E-10	1.47E-12	2.25E-19	1.34E-29	0.00E+00	0.00E+00	0.00E+00
YB175	4.08E-12	9.08E-14	4.44E-18	1.52E-24	8.74E-38	0.00E+00	0.00E+00
LU177	1.88E-03	1.76E-04	1.47E-06	7.45E-07	3.25E-07	4.73E-10	1.34E-13
LU177M	7.02E-06	6.33E-06	4.84E-06	3.24E-06	1.41E-06	2.06E-09	5.84E-13
HF175	2.98E-02	2.37E-02	1.31E-02	5.37E-03	8.58E-04	4.47E-10	6.26E-18
HF180M	3.08E-11	0.00E+00	0.00E+00	0.00E+00	0.00E+00	0.00E+00	0.00E+00
HF181	7.98E-01	5.48E-01	2.06E-01	4.72E-02	2.28E-03	9.65E-14	1.04E-26
HF182	7.65E-10	7.65E-10	7.65E-10	7.65E-10	7.65E-10	7.65E-10	7.65E-10
TA182	1.05E+01	9.16E+00	6.38E+00	3.71E+00	1.21E+00	1.82E-04	3.78E-09
TA183	2.17E+01	9.53E-01	2.74E-04	1.34E-09	1.55E-20	0.00E+00	0.00E+00
W181	5.56E-03	4.87E-03	3.46E-03	2.07E-03	7.16E-04	1.68E-07	4.88E-12
W185	1.94E-01	1.57E-01	9.00E-02	3.92E-02	7.09E-03	9.88E-09	4.72E-16
W187	2.33E-02	2.59E-09	1.89E-27	0.00E+00	0.00E+00	0.00E+00	0.00E+00
W188	1.40E-02	1.11E-02	6.12E-03	2.49E-03	3.91E-04	1.80E-10	2.16E-18
RE186	2.86E-02	4.19E-04	6.92E-09	4.64E-16	7.95E-31	0.00E+00	0.00E+00
RE187	6.01E-11	6.01E-11	6.01E-11	6.01E-11	6.01E-11	6.01E-11	6.01E-11
RE188	1.52E-02	1.13E-02	6.18E-03	2.52E-03	3.96E-04	1.82E-10	2.18E-18
RE189	5.96E-08	8.65E-15	1.25E-32	0.00E+00	0.00E+00	0.00E+00	0.00E+00
OS191	4.34E-05	1.54E-05	1.04E-06	1.81E-08	4.34E-12	0.00E+00	0.00E+00
OS191M	6.15E-09	1.02E-21	0.00E+00	0.00E+00	0.00E+00	0.00E+00	0.00E+00
OS193	1.23E-11	5.34E-17	5.55E-31	0.00E+00	0.00E+00	0.00E+00	0.00E+00
IR192	9.83E-06	7.92E-06	4.52E-06	1.95E-06	3.43E-07	8.05E-12	7.55E-12
IR192M	7.76E-12	7.76E-12	7.76E-12	7.75E-12	7.74E-12	7.65E-12	7.54E-12
IR194	1.52E-09	1.34E-13	1.31E-13	1.28E-13	1.20E-13	7.57E-14	4.25E-14
PT193	3.08E-11	3.09E-11	3.09E-11	3.09E-11	3.09E-11	3.07E-11	3.05E-11
PT193M	5.54E-09	1.36E-10	8.57E-15	4.29E-21	4.61E-34	0.00E+00	0.00E+00
PT195M	6.53E-12	4.07E-14	7.21E-20	1.70E-28	0.00E+00	0.00E+00	0.00E+00
TL207	1.08E-17	1.32E-17	1.78E-17	2.70E-17	4.38E-17	1.86E-16	3.83E-16
TL208	4.94E-14	5.77E-14	8.54E-14	1.31E-13	2.47E-13	1.40E-12	2.25E-12
TL209	6.95E-19	4.78E-19	1.62E-19	1.71E-19	1.62E-19	1.87E-19	2.35E-19
PB205	1.47E-10	1.47E-10	1.47E-10	1.47E-10	1.47E-10	1.47E-10	1.47E-10
PB209	3.22E-17	2.21E-17	7.50E-18	7.91E-18	7.48E-18	8.64E-18	1.09E-17

Nuclide	7 Days	30 Days	90 Days	180 Days	1 Year	5 Years	10 Years
PB210	2.15E-19	2.32E-19	2.47E-19	2.55E-19	2.74E-19	1.03E-18	4.77E-18
PB211	1.08E-17	1.32E-17	1.79E-17	2.70E-17	4.39E-17	1.86E-16	3.84E-16
PB212	1.38E-13	1.61E-13	2.38E-13	3.65E-13	6.86E-13	3.90E-12	6.27E-12
PB214	6.58E-19	6.58E-19	9.11E-19	1.18E-18	1.87E-18	1.33E-17	4.30E-17
BI210	2.90E-09	1.21E-10	3.00E-14	3.73E-19	2.74E-19	1.03E-18	4.77E-18
BI211	1.08E-17	1.32E-17	1.79E-17	2.70E-17	4.39E-17	1.86E-16	3.84E-16
BI212	1.38E-13	1.61E-13	2.38E-13	3.65E-13	6.86E-13	3.90E-12	6.27E-12
BI213	3.22E-17	2.21E-17	7.50E-18	7.91E-18	7.48E-18	8.64E-18	1.09E-17
BI214	6.58E-19	6.58E-19	9.11E-19	1.18E-18	1.87E-18	1.33E-17	4.30E-17
PO210	4.83E-09	4.40E-09	3.26E-09	2.08E-09	8.22E-10	5.47E-13	6.68E-17
PO211	3.02E-20	3.69E-20	5.00E-20	7.57E-20	1.23E-19	5.21E-19	1.08E-18
PO212	8.81E-14	1.03E-13	1.52E-13	2.34E-13	4.40E-13	2.50E-12	4.02E-12
PO213	3.15E-17	2.16E-17	7.34E-18	7.74E-18	7.32E-18	8.45E-18	1.07E-17
PO214	1.26E-17	6.05E-18	1.62E-18	1.20E-18	1.87E-18	1.33E-17	4.30E-17
PO215	1.08E-17	1.32E-17	1.79E-17	2.70E-17	4.39E-17	1.86E-16	3.84E-16
PO216	1.38E-13	1.61E-13	2.38E-13	3.65E-13	6.86E-13	3.90E-12	6.27E-12
PO218	6.58E-19	6.58E-19	9.11E-19	1.18E-18	1.87E-18	1.33E-17	4.30E-17
AT217	3.22E-17	2.21E-17	7.50E-18	7.91E-18	7.48E-18	8.64E-18	1.09E-17
RN218	1.20E-17	5.39E-18	7.10E-19	1.75E-20	0.00E+00	0.00E+00	0.00E+00
RN219	1.08E-17	1.32E-17	1.79E-17	2.70E-17	4.39E-17	1.86E-16	3.84E-16
RN220	1.38E-13	1.61E-13	2.38E-13	3.65E-13	6.86E-13	3.90E-12	6.27E-12
RN222	6.58E-19	6.58E-19	9.11E-19	1.18E-18	1.87E-18	1.33E-17	4.30E-17
FR221	3.22E-17	2.21E-17	7.50E-18	7.91E-18	7.48E-18	8.64E-18	1.09E-17
FR223	2.09E-19	2.36E-19	3.08E-19	4.16E-19	6.42E-19	2.57E-18	5.29E-18
RA222	1.20E-17	5.39E-18	7.10E-19	1.75E-20	0.00E+00	0.00E+00	0.00E+00
RA223	1.08E-17	1.32E-17	1.79E-17	2.70E-17	4.39E-17	1.86E-16	3.84E-16
RA224	1.38E-13	1.61E-13	2.38E-13	3.65E-13	6.86E-13	3.90E-12	6.27E-12
RA225	2.88E-17	1.48E-17	7.21E-18	7.21E-18	7.48E-18	8.64E-18	1.09E-17
RA226	6.95E-19	7.52E-19	9.11E-19	1.18E-18	1.87E-18	1.33E-17	4.30E-17
RA228	0.00E+00	0.00E+00	0.00E+00	0.00E+00	0.00E+00	0.00E+00	6.27E-21
AC225	3.22E-17	2.21E-17	7.50E-18	7.91E-18	7.48E-18	8.64E-18	1.09E-17
AC227	1.51E-17	1.71E-17	2.23E-17	3.01E-17	4.65E-17	1.86E-16	3.84E-16
AC228	1.98E-24	0.00E+00	0.00E+00	0.00E+00	0.00E+00	0.00E+00	6.27E-21
TH226	1.20E-17	5.39E-18	7.10E-19	1.75E-20	0.00E+00	0.00E+00	0.00E+00
TH227	1.23E-17	1.46E-17	1.97E-17	2.74E-17	4.32E-17	1.83E-16	3.79E-16
TH228	1.42E-13	1.66E-13	2.37E-13	3.63E-13	6.84E-13	3.89E-12	6.27E-12
TH229	7.28E-18	7.29E-18	7.32E-18	7.37E-18	7.48E-18	8.64E-18	1.09E-17
TH230	2.02E-15	2.12E-15	2.37E-15	2.74E-15	3.50E-15	9.71E-15	1.79E-14
TH231	4.18E-12	3.30E-12	3.30E-12	3.30E-12	3.30E-12	3.30E-12	3.30E-12
TH232	1.81E-21	1.94E-21	2.28E-21	2.79E-21	3.84E-21	1.21E-20	2.25E-20
TH234	2.46E-10	2.46E-10	2.46E-10	2.46E-10	2.46E-10	2.46E-10	2.46E-10
PA231	1.00E-15	1.01E-15	1.02E-15	1.03E-15	1.07E-15	1.35E-15	1.70E-15
PA232	1.25E-12	6.49E-18	1.06E-31	0.00E+00	0.00E+00	0.00E+00	0.00E+00
PA233	7.53E-11	7.89E-11	8.28E-11	8.38E-11	8.39E-11	8.45E-11	8.62E-11
PA234M	2.46E-10	2.46E-10	2.46E-10	2.46E-10	2.46E-10	2.46E-10	2.46E-10

Nuclide	7 Days	30 Days	90 Days	180 Days	1 Year	5 Years	10 Years
PA234	3.20E-13	3.20E-13	3.20E-13	3.20E-13	3.20E-13	3.20E-13	3.20E-13
U230	1.16E-17	5.24E-18	3.50E-19	0.00E+00	0.00E+00	0.00E+00	0.00E+00
U231	1.20E-15	2.55E-17	1.28E-21	4.53E-28	0.00E+00	0.00E+00	0.00E+00
U232	1.15E-12	1.26E-12	1.52E-12	1.90E-12	2.61E-12	5.86E-12	7.00E-12
U233	1.98E-15	2.00E-15	2.06E-15	2.15E-15	2.33E-15	3.81E-15	5.67E-15
U234	1.67E-10	1.67E-10	1.67E-10	1.68E-10	1.69E-10	1.77E-10	1.86E-10
U235	3.30E-12	3.30E-12	3.30E-12	3.30E-12	3.30E-12	3.30E-12	3.30E-12
U236	4.20E-11	4.20E-11	4.20E-11	4.20E-11	4.20E-11	4.20E-11	4.21E-11
U237	1.52E-04	1.43E-05	3.26E-08	2.39E-09	2.33E-09	1.92E-09	1.51E-09
U238	2.46E-10	2.46E-10	2.46E-10	2.46E-10	2.46E-10	2.46E-10	2.46E-10
U240	2.35E-11	3.66E-16	3.66E-16	3.66E-16	3.66E-16	3.66E-16	3.66E-16
NP235	1.77E-12	1.70E-12	1.53E-12	1.31E-12	9.46E-13	7.34E-14	3.00E-15
NP236M	1.83E-11	7.52E-19	0.00E+00	0.00E+00	0.00E+00	0.00E+00	0.00E+00
NP236	1.45E-15	1.45E-15	1.45E-15	1.45E-15	1.45E-15	1.45E-15	1.45E-15
NP237	8.25E-11	8.37E-11	8.39E-11	8.39E-11	8.39E-11	8.45E-11	8.62E-11
NP238	1.32E-05	7.10E-09	1.68E-11	1.67E-11	1.67E-11	1.64E-11	1.60E-11
NP239	2.96E-03	3.41E-06	1.24E-08	1.24E-08	1.24E-08	1.24E-08	1.24E-08
NP240M	2.37E-11	3.66E-16	3.66E-16	3.66E-16	3.66E-16	3.66E-16	3.66E-16
PU236	1.76E-10	1.73E-10	1.67E-10	1.57E-10	1.39E-10	5.25E-11	1.56E-11
PU237	2.01E-10	1.42E-10	5.69E-11	1.45E-11	8.68E-13	1.97E-22	1.73E-34
PU238	6.11E-07	6.23E-07	6.46E-07	6.71E-07	6.99E-07	7.03E-07	6.76E-07
PU239	2.33E-07	2.34E-07	2.34E-07	2.34E-07	2.34E-07	2.34E-07	2.34E-07
PU240	3.24E-07	3.24E-07	3.24E-07	3.24E-07	3.24E-07	3.24E-07	3.24E-07
PU241	9.95E-05	9.92E-05	9.84E-05	9.73E-05	9.49E-05	7.83E-05	6.16E-05
PU242	1.34E-09	1.34E-09	1.34E-09	1.34E-09	1.34E-09	1.34E-09	1.34E-09
PU243	2.42E-14	4.01E-17	4.01E-17	4.01E-17	4.01E-17	4.01E-17	4.01E-17
PU244	3.67E-16	3.67E-16	3.67E-16	3.67E-16	3.67E-16	3.67E-16	3.67E-16
PU245	1.44E-14	3.04E-30	0.00E+00	0.00E+00	0.00E+00	0.00E+00	0.00E+00
PU246	2.40E-13	5.52E-14	1.20E-15	3.21E-18	2.41E-23	8.12E-25	8.12E-25
AM239	4.75E-17	5.16E-31	0.00E+00	0.00E+00	0.00E+00	0.00E+00	0.00E+00
AM240	1.82E-11	9.73E-15	2.86E-23	4.58E-36	0.00E+00	0.00E+00	0.00E+00
AM241	5.71E-08	6.71E-08	9.31E-08	1.32E-07	2.10E-07	7.61E-07	1.31E-06
AM242M	3.35E-09	3.35E-09	3.35E-09	3.35E-09	3.34E-09	3.28E-09	3.21E-09
AM242	4.56E-08	3.34E-09	3.33E-09	3.33E-09	3.32E-09	3.26E-09	3.19E-09
AM243	1.24E-08	1.24E-08	1.24E-08	1.24E-08	1.24E-08	1.24E-08	1.24E-08
AM244	5.33E-11	1.88E-27	0.00E+00	0.00E+00	0.00E+00	0.00E+00	0.00E+00
AM245	1.79E-14	3.77E-18	3.31E-18	2.73E-18	1.83E-18	7.71E-20	1.48E-21
AM246	2.40E-13	5.53E-14	1.20E-15	3.81E-18	2.41E-23	8.12E-25	8.12E-25
CM241	9.17E-12	5.89E-12	1.85E-12	3.28E-13	9.26E-15	5.62E-27	0.00E+00
CM242	2.33E-05	2.11E-05	1.64E-05	1.12E-05	5.09E-06	1.30E-08	2.64E-09
CM243	8.85E-09	8.83E-09	8.80E-09	8.75E-09	8.64E-09	7.84E-09	6.94E-09
CM244	1.26E-06	1.26E-06	1.25E-06	1.24E-06	1.21E-06	1.04E-06	8.60E-07
CM245	8.80E-11	8.80E-11	8.80E-11	8.80E-11	8.80E-11	8.80E-11	8.80E-11
CM246	1.65E-11	1.65E-11	1.65E-11	1.65E-11	1.65E-11	1.65E-11	1.65E-11
CM247	4.01E-17	4.01E-17	4.01E-17	4.01E-17	4.01E-17	4.01E-17	4.01E-17

Nuclide	7 Days	30 Days	90 Days	180 Days	1 Year	5 Years	10 Years
CM248	8.05E-17	8.05E-17	8.05E-17	8.05E-17	8.05E-17	8.05E-17	8.05E-17
CM249	8.38E-19	3.42E-19	3.47E-20	1.69E-21	1.26E-24	0.00E+00	0.00E+00
BK249	2.74E-13	2.60E-13	2.29E-13	1.88E-13	1.26E-13	5.32E-15	1.02E-16
BK250	1.83E-18	1.73E-18	1.49E-18	1.17E-18	7.29E-19	4.14E-20	1.47E-20
CF249	6.32E-17	9.65E-17	1.76E-16	2.77E-16	4.32E-16	7.28E-16	7.34E-16
CF250	3.75E-15	3.74E-15	3.70E-15	3.66E-15	3.56E-15	2.88E-15	2.21E-15
CF251	1.99E-17	1.99E-17	1.99E-17	1.99E-17	1.99E-17	1.98E-17	1.97E-17
CF252	3.45E-15	3.39E-15	3.25E-15	3.05E-15	2.67E-15	9.32E-16	2.51E-16
CF253	2.70E-16	1.10E-16	1.12E-17	5.45E-19	4.04E-22	0.00E+00	0.00E+00
CF254	4.35E-18	3.21E-18	1.76E-18	5.59E-19	2.14E-19	1.15E-26	9.40E-36
ES253	2.06E-16	1.85E-16	5.00E-17	3.95E-18	4.73E-19	0.00E+00	0.00E+00
ES254M	5.27E-18	3.12E-22	2.91E-33	0.00E+00	0.00E+00	0.00E+00	0.00E+00
ES254	1.83E-18	1.73E-18	1.47E-18	1.13E-18	7.29E-19	4.14E-20	1.47E-20
TOTAL	1.65E+03	1.15E+03	6.03E+02	3.72E+02	2.55E+02	9.87E+01	4.61E+01

In order to provide the results in Table D1 it was necessary to convert the ORIGEN2 case from a power irradiation to a flux irradiation for the TPBAR. The output file from the input file shown in Appendix B provides an equivalent flux irradiation to the specified power irradiation in the input file. Using this information, it is possible to include the trace uranium in the metal components to generate a complete listing of radionuclides. Table D1 contains a summation of the activation products, the actinides and daughters, and the fission products. A listing of the input file is provided below.

Small_Origen.inp

```
-1
-1
-1
TIT     Prod.  Reactor Target Rod Waste Eval.:  TPBAR
RDA     FLUX=5.16435E14
BAS     1 TPBAR
LIB     0 1 2 3 204 205 206 9 3 0 1 1
PHO     101 102 103 10
LIP     0 0 0
INP     1 1 -1 -1 1 1
BUP
IRF      50.  5.16435E14  1  2  4  2
IRF     100.  5.16435E14  2  3  4  0
IRF     150.  5.16435E14  3  4  4  0
IRF     200.  5.16435E14  4  5  4  0
IRF     250.  5.16435E14  5  6  4  0
IRF     300.  5.16435E14  6  7  4  0
IRF     350.  5.16435E14  7  8  4  0
IRF     400.  5.16435E14  8  9  4  0
IRF     450.  5.16435E14  9 10  4  0
IRF     500.  5.16435E14 10 11  4  0
IRF     510.  5.16435E14 11  1  4  0
BUP
DEC      7.              1  2  4  2
```

```
DEC      30.            2  3  4  0
DEC      90.            3  4  4  0
DEC     180.            4  5  4  0
DEC       1.            5  6  5  0
DEC       5.            6  7  5  0
DEC      10.            7  8  5  0
HED     1   Discharge
HED     2     7 Days
HED     3    30 Days
HED     4    90 Days
HED     5   180 Days
HED     6     1 Year
HED     7     5 Years
HED     8    10 Years
OPTL    8 8 8 8 7 8 7 8 7 8 8 8 8 8 8 8 8 8 8 8 8 8 8 8
OPTA    8 8 8 8 7 8 7 8 8 8 8 8 8 8 8 8 8 8 8 8 8 8 8 8
OPTF    8 8 8 8 7 8 7 8 8 8 8 8 8 8 8 8 8 8 8 8 8 8 8 8
CUT     7 3.0E-17 -1
OUT     8  1  0  -1
STP     4
1        30060 6.48E+00    30070 1.49E+01        0       0.0
2       922340 4.14E-08   922350 5.42E-06   922380 7.48E-04        0       0.0
4       260000 3.50E+02   240000 1.02E+02   280000 3.35E+02    80000 1.02E+02
4       130000 8.66E+01   330000 2.75E-01    50000 1.14E-02   560000 1.68E-01
4        60000 7.12E-01   200000 8.40E-01   480000 1.08E-04   270000 2.87E-01
4       290000 2.37E-01    10000 5.38E-03   720000 2.15E-02   190000 1.05E+00
4       120000 4.24E-01   250000 1.13E+01   420000 1.70E+01    70000 7.37E-02
4       110000 1.05E+00   410000 2.83E-01   150000 2.26E-01   820000 8.40E-02
4       160000 5.65E-02   340000 7.35E-02   140000 6.36E+00   500000 3.66E+00
4       730000 1.13E-01   220000 1.08E-02   230000 2.83E-01   740000 2.15E-02
4       400000 2.10E+02    90000 3.15E-02   170000 3.15E-02   530000 3.15E-02
4       350000 3.15E-02        0       0.0
0
END
```

APPENDIX 1-D

DOE Drawing H-3-307845, "Production TPBAR Reactor Interface Dimensions Watts Bar," Revision 10, Sheet 1 of 2

UNCLASSIFIED

UNCLASSIFIED

Security-Related Information
Figure Withheld Under CFR 2.390

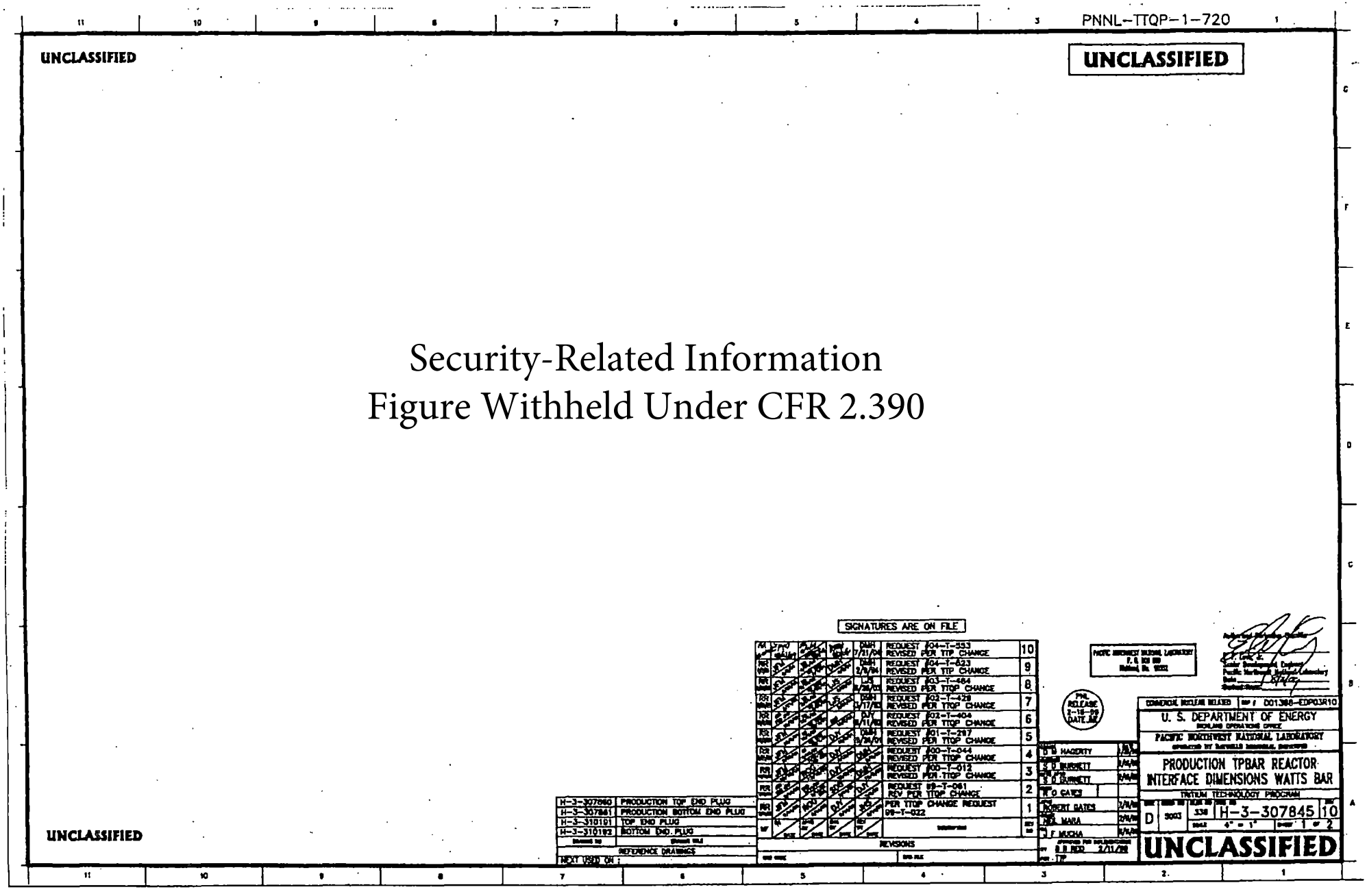

UNCLASSIFIED

APPENDIX 1-E

DOE Drawing H-3-308875, "Production TPBAR Reactor Interface Dimensions Sequoyah," Revision 5, Sheet 1 of 2

UNCLASSIFIED

UNCLASSIFIED

VERIFIED DISTRIBUTION
COPY NO. 00002

Security-Related Information
Figure Withheld Under CFR 2.390

PACIFIC NORTHWEST NATIONAL LABORATORY
P. O. BOX 300
Richland, Wa. 99352

E. F. Lowe, Jr.
Senior Development Engineer
Pacific Northwest National Laboratory
Date

PNL RELEASE 8/25/00 DATE

SIGNATURES ARE ON FILE

REV	DATE	DESCRIPTION	REV NO
5	DMH 2/6/04	REQUEST #04-T-523 REVISED PER TTP CHANGE	5
4	DMH 3/11/03	REQUEST #02-T-429 REVISED PER TTOP CHANGE	4
3	DJY 9/11/02	REQUEST #02-T-404 REVISED PER TTOP CHANGE	3
2	DJY 9/4/02	REQUEST #02-T-400 REVISED PER TTOP CHANGE	2
1	DMH 9/24/01	REQUEST #01-T-297 REVISED PER TTOP CHANGE	1

REVISIONS

H-3-307860	PRODUCTION TOP END PLUG
H-3-307861	PRODUCTION BOTTOM END PLUG
H-3-310191	TOP END PLUG
H-3-310192	BOTTOM END PLUG

REFERENCE DRAWINGS

NEXT USED ON :

COMMERCIAL NUCLEAR RELATED | IMP # D01398-EDP03R10

U. S. DEPARTMENT OF ENERGY
RICHLAND OPERATIONS OFFICE

PACIFIC NORTHWEST NATIONAL LABORATORY
OPERATED BY BATTELLE MEMORIAL INSTITUTE

PRODUCTION TPBAR REACTOR
INTERFACE DIMENSIONS SEQUOYAH

TRITIUM TECHNOLOGY PROGRAM

SIZE	CODE IDENT NO	SCALE	DWG NO	REV
D	5003	338	H-3-308875	5

SCALE 4" = 1" SHEET 1 OF 2

UNCLASSIFIED

UNCLASSIFIED

APPENDIX 1-F

DOE Drawing H-3-310568, "Mark 8 Multi-Pencil TPBAR – Watts Bar Reactor Interface," Revision 0, Sheet 1 of 2

UNCLASSIFIED

PNNL-TTP-1-976

UNCLASSIFIED

VERIFIED DISTRIBUTION
COPY NO. 00002

Security-Related Information
Figure Withheld Under CFR 2.390

RELEASE
02-02-06
DATE

PACIFIC NORTHWEST NATIONAL LABORATORY
ATTN: CMCC
P.O. BOX 999
Richland, WA 99352

Authorized Derivative Classifier
C. F. Love, Jr.
Senior Development Engineer
Pacific Northwest National Laboratory
Date 2/4/06
Classification

COMMERCIAL NUCLEAR RELATED

DRAWN: DM HAGERTY	DATE: 10/1/05	U. S. DEPARTMENT OF ENERGY PACIFIC NORTHWEST SITE OFFICE
CHECKED: DM Hagerty	2/2/06	Pacific Northwest Division Battelle Richland, Washington 99352
ENGR: R O GATES		MARK 8 MULTI PENCIL TPBAR – WATTS BAR REACTOR INTERFACE
APPROVED:	2/2/06	TRITIUM TECHNOLOGY PROGRAM
	2/2/06	SIZE D · INDEX NO. 5003 · BLDG NO. 338 · DWG NO. H-3-310568 · REV NO. 0
	2/2/06	SCALE 4" = 1" · SHEET 1 OF 2
APPD FOR IMPLEMENTATION BY:	2/2/06	UNCLASSIFIED

REFERENCE DRAWINGS
NEXT USED ON
REVISIONS

UNCLASSIFIED

2/2

APPENDIX 1-G

PNNL Letter, TTP-06-056, Subject: Exposure of Shipping Casks to Tritium, February 21, 2006

Pacific Northwest National Laboratory
Operated by Battelle for the U.S. Department of Energy

February 21, 2006 TTP-06-056

Ms. Nanette D. Founds
Tritium Readiness Subprogram
Office of Stockpile Technology (NA-123)
Department of Energy/NNSA
PO Box 5400
Albuquerque, NM 87185-5400

Dear Ms. Founds:

EXPOSURE OF SHIPPING CASKS TO TRITIUM

Pacific Northwest National Laboratory was assigned a Tritium Readiness Subprogram Action Item to "Draft position on NRC tritium cask exposure issue" (AI 43). Attached is a white paper summarizing the conclusions we presented during the teleconference with NAC International, Inc.; U.S. Nuclear Regulatory Commission; and National Nuclear Security Administration to complete this action.

If you have any questions regarding the information in this paper, please contact me or Bruce Reid at (509) 372-4135.

Sincerely,

Cheryl K. Thornhill

Cheryl K. Thornhill, Manager
Tritium Technology Program

/bjk
Enclosure

ecc: J. R. Chapman, SAIC
C. J. Rogers, SAIC
M. Holloway, SAIC
cc: J. Adam, NAC
B. G. McLeod, DOE-PNSO
NA-123 RMS/SS (05-10)

902 Battelle Boulevard • P.O. Box 999 • Richland, WA 99352

Telephone 509-375-2532 □ Email cheryl.thornhill@pnl.gov □ Fax 509-375-2610

Nuclear Regulatory Commission Concerns Regarding Shipping Tritium Producing Burnable Absorber Rods in the NAC-LWT Cask

Background

In conversations with NAC licensing personnel in preparation for their submittal of a license amendment request for the NAC-LWT cask to handle future shipments of tritium producing burnable absorber rods (TPBARs), staff from the U.S. Nuclear Regulatory Commission (NRC) expressed some concerns regarding the potential for residual tritium contamination in the crystalline structure of the stainless steel to be an issue for subsequent cask users. While the NRC had no firm calculations, some "back-of-the-envelope" calculations by an NRC materials expert indicated that residual tritium could be an issue of concern for the subsequent cask users who were not expecting tritium contamination.

A conference call was held on January 26, 2006 with representatives of NRC, NNSA, Westinghouse Savannah River Company (WSRC), NAC and Pacific Northwest National Laboratory (PNNL) participating. At the conclusion of the call, NRC was satisfied with the responses received and requested that NAC provide, in Chapter 7 of the NAC-LWT Safety Analysis Report, a discussion of the procedures to be followed when unloading TPBARs and before sending the empty cask back to NAC.

During the conference call, PNNL staff discussed the experience with shipping TPBARs to date and the potential for tritium to permeate from the irradiated TPBARs into the Stainless Steel cask wall.

Transportation Experience

The NRC has licensed the NAC-LWT cask to ship up to 300 TPBARs including 2 pre-failed TPBARs. To date, there have been 9 shipments of TPBARs to various locations as noted below:

- 4 shipments of 8 TPBARs each from Watts Bar Nuclear Plant (WBN) to Idaho National Laboratory (INL) (1999)
- 1 shipment of 3 sectioned TPBARs (12 sections) from INL to PNNL (2000)
- 1 shipment of 6 TPBARs from WBN to INL (2005)
- 1 shipment of 3 TPBARs from INL to PNNL (2005)
- 1 shipment of 215 TPBARs from WBN to the Savannah River Site Tritium Extraction Facility (TEF) (2005)
- 1 shipment of 19 TPBARs from WBN to TEF (2005)

The last two shipments will remain stored at TEF in the NAC-LWT shipping casks until the TEF is ready to process the tritium.

Nuclear Regulatory Commission Concerns Regarding Shipping Tritium Producing Burnable Absorber Rods in the NAC-LWT Cask

Discussion

Prior to opening the casks bearing TPBARs, both INL and PNNL have sampled the gas in the cask cavity to assure that there would not be a tritium release to the environment or to facility personnel. In all cases, the gas samples have tested at negligible levels for tritium (~1E-6 μCi/cc). Also, prior to sending the empty cask back to NAC for use by others, "swipes" of the internal surfaces have been taken to assure that contamination was not present. Samples taken on the consolidation container and the basket within the cask cavity showed tritium levels ranging from ~25 to ~1050 disintegrations per minute per 100 cm^2, well below any levels of concern for contamination. A similar procedure will be followed at TEF when they open and return the NAC-LWT casks. The TPBARs are contained in the stainless steel consolidation container and the basket holds the consolidation container. Both are between the TPBARs and the cask inner wall, thus if contamination is present, it would be noticed first on the consolidation container and basket before it would affect the cask wall.

When the TPBARs at INL were punctured, the gas pressure inside the rod was measured and the gas analyzed. The tritium partial pressure in the gas was below 5 $X10^{-3}$ Pa of T_2 which is ~5 X 10^{-8} atmospheres, i.e., equivalent to a very good vacuum with respect to tritium. Hence, there is little driving force for permeation of the tritium out of the unbreached TPBARs during storage and shipment. With no driving force, there is no mechanism for the tritium to permeate from the TPBARs into the cask inner wall. As noted above, there have been no shipments to date at the licensed limit (300) for TPBARs; however the number of TPBARs in the cask will not change the tritium partial pressure inside the individual TPBAR. The number of TPBARs in the shipment does affect the temperature in the cask cavity (at 30 days after discharge from the reactor, each TPBAR produces ~3.3 watts of decay heat). The temperature that will exist when shipping 300 TPBARs is well below the temperature required to drive the tritium out of the TPBARs to any significant degree within the time frame of expected residence in the cask.

With regard to the two (2) pre-failed TPBARs in a shipment, which is part of the licensing basis for the cask, it is assumed that the failure occurs near the end of the plant operating cycle when the TPBAR has generated the maximum amount of tritium. The isotopic exchange that takes place between the tritium in the TPBAR and the hydrogen in the reactor coolant system (and the spent fuel pool after the TPBARs are discharged from the reactor) is expected to remove essentially all of the tritium from the TPBAR, thus the tritium available to "leak" from the TPBAR to the cask wall is still expected to be negligible. The failed TPBARs will have no internal pressure and any residual tritium would first contact the consolidation container and basket before the cask inner wall is exposed. Another scenario would be damage to two TPBARs during handling in the spent fuel pool while removing the TPBAR base plate from the fuel assembly. In this case, TVA procedures will have the breached TPBAR placed in another tube which can be sealed to prevent further tritium contamination of the spent fuel pool. During the time

it will take to remove the TPBAR from the baseplate, get the secondary tube, and place the TPBAR in the tube, a significant amount of the tritium will have been released to the spent fuel pool through isotopic exchange. Because of the precautions to be taken and the low driving force to move tritium from the TPBAR, contamination of the cask cavity is not expected to be a significant issue. In this scenario, the TPBAR will be enclosed in a secondary tube contained in the consolidation container, so an additional barrier will exist between the TPBAR and the cask wall.

If the tritium partial pressure in the cask did rise to some higher level (we have not performed calculations to determine what pressure would be required) then tritium surface contamination would be expected. Experiments performed by Hirayabashi and Saeki (JNM 120 (1984) 309-315) examined stainless steel coupons after exposing the coupons to relatively high pressure tritium gas (13,300 Pa compared to the $<5X10^{-3}$ Pa found inside of TPBARs at INL). They did find subsurface tritium in the steel after exposure at this pressure. However, it is significant to note that they also found surface concentrations of tritium in the sample almost 2 orders of magnitude greater than the levels in the bulk (i.e. beneath the surface). Hence, extrapolation of these results to the NAC-LWT cask situation would indicate that highly contaminated surface smears would identify that subsurface tritium concentrations of lower levels (~2 orders of magnitude lower) existed. At some level of surface contamination, it is evident from the literature that the surface contamination would indicate there had been enough tritium permeate into the cask wall that subsequent leaching of tritium from the bulk could present a concern for subsequent users. No work has been done to determine what this level of surface contamination is. However, at the low tritium partial pressure in the TPBARs, the risk of achieving a high level of surface contamination is small and, as noted above, there are other stainless steel surfaces between the TPBARs and the cask wall. If an abnormally high level of surface contamination is found, this issue will need to be addressed.

Conclusion

Based on past experience and the above discussion, it is concluded that the potential for tritium contamination of the NAC-LWT cask inner wall is minimal. The steps that will be taken to monitor the cask gas prior to opening the cask and the taking of smears on the internal surfaces will provide assurance that residual tritium contamination is not an issue of concern for subsequent users.