UNIVERSITY *of* MISSOURI

RESEARCH REACTOR CENTER

October 1, 2015

U.S. Nuclear Regulatory Commission
Attention: Document Control Desk
Mail Station P1-37
Washington, DC 20555-0001

REFERENCE: Docket 50-186
University of Missouri – Columbia Research Reactor
Amended Facility License R-103

SUBJECT: Written communication as specified by 10 CFR 50.4(b)(1) regarding responses to the "University of Missouri at Columbia - Request for Additional Information Regarding the Renewal of Facility Operating License No. R-103 for the University of Missouri at Columbia Research Reactor (TAC No. ME1580)," dated April 17, 2015

On August 31, 2006, the University of Missouri-Columbia Research Reactor (MURR) submitted a request to the U.S. Nuclear Regulatory Commission (NRC) to renew Amended Facility Operating License R-103.

On May 6, 2010, the NRC requested additional information and clarification regarding the renewal request in the form of nineteen (19) Complex Questions. By letter dated September 3, 2010, MURR responded to seven (7) of those Complex Questions.

On June 1, 2010, the NRC requested additional information and clarification regarding the renewal request in the form of one hundred and sixty-seven (167) 45-Day Response Questions. By letter dated July 16, 2010, MURR responded to forty-seven (47) of those 45-Day Response Questions.

On July 14, 2010, via electronic mail (email), MURR requested additional time to respond to the remaining one hundred and twenty (120) 45-Day Response Questions. By letter dated August 4, 2010, the NRC granted the request. By letter dated August 31, 2010, MURR responded to fifty-three (53) of the 45-Day Response Questions.

On September 1, 2010, via email, MURR requested additional time to respond to the remaining twelve (12) Complex Questions. By letter dated September 27, 2010, the NRC granted the request.

1513 Research Park Drive Columbia, MO 65211 Phone: 573-882-4211 Fax: 573-882-6360 Web: www.murr.missouri.edu

On September 29, 2010, via email, MURR requested additional time to respond to the remaining sixty-seven (67) 45-Day Response Questions. On September 30, 2010, MURR responded to sixteen (16) of the remaining 45-Day Questions. By letter dated October 13, 2010, the NRC granted the extension request.

By letter dated October 29, 2010, MURR responded to sixteen (16) of the remaining 45-Day Response Questions and two (2) of the remaining Complex Questions.

By letter dated November 30, 2010, MURR responded to twelve (12) of the remaining 45-Day Response Questions.

On December 1, 2010, via email, MURR requested additional time to respond to the remaining 45-Day Response and Complex Questions. By letter dated December 13, 2010, the NRC granted the extension request.

On January 14, 2011, via email, MURR requested additional time to respond to the remaining 45-Day Response and Complex Questions. By letter dated February 1, 2011, the NRC granted the extension request.

By letter dated March 11, 2011, MURR responded to twenty-one (21) of the remaining 45-Day Response Questions.

On May 27, 2011, via email, MURR requested additional time to respond to the remaining 45-Day Response and Complex Questions. By letter dated July 5, 2011, the NRC granted the request.

By letter dated September 8, 2011, MURR responded to six (6) of the remaining 45-Day Response and Complex Questions.

On September 30, 2011, via email, MURR requested additional time to respond to the remaining the remaining 45-Day Response and Complex Questions. By letter dated November 10, 2011, the NRC granted the request.

By letter dated January 6, 2012, MURR responded to four (4) of the remaining 45-Day Response and Complex Questions. Also submitted was an updated version of the MURR Technical Specifications.

On January 23, 2012, via email, MURR requested additional time to respond to the remaining the remaining 45-Day Response and Complex Questions. By letter dated January 26, 2012, the NRC granted the request.

On April 12, 2012, via email, MURR requested additional time to respond to the remaining the remaining 45-Day Response and Complex Questions.

By letter dated June 28, 2012, MURR responded to the remaining six (6) 45-Day Response and Complex Questions. With that set of responses, all 45-Day Response and Complex Questions had been addressed.

On December 20, 2012, the NRC requested a copy of the current Physical Security Plan (PSP) and Operator Requalification Program.

By letter dated January 4, 2013, MURR provided the NRC a copy of the current PSP and Operator Requalification Program.

On February 11, 2013, the NRC requested updated financial information in the form of four (4) questions because the information provided by the September 14, 2009 response had become outdated.

By letter dated March 12, 2013, MURR responded to the four (4) questions.

On December 3, 2014, the NRC requested additional information in the form of two (2) questions regarding significant changes to the MURR facility since submittal of the licensing renewal application in August 2006.

By letter dated January 28, 2015, MURR responded to the two (2) questions.

On April 17, 2015, the NRC requested additional information in the form of ten (10) questions.

On May 29, 2015, via email, MURR requested additional time to respond to the ten (10) questions.

On June 18, 2015, the NRC requested additional information in the form of two (2) questions.

By letter dated July 31, 2015, MURR responded to the two (2) questions from the June 18, 2015 request.

On September 14, 2015, via telephone, the NRC requested a copy of the Emergency Plan (EP).

By letter dated September 14, 2015, the NRC requested additional information in the form of sixteen (16) questions regarding the PSP.

By letter dated September 15, 2015, MURR provided the NRC a copy of the current EP.

Attached are responses to the April 17, 2015, request for additional information, which were in the form of ten (10) questions.

If there are any questions regarding this response, please contact me at (573) 882-5319 or FruitsJ@missouri.edu. I declare under penalty of perjury that the foregoing is true and correct.

Sincerely,

John L. Fruits
Reactor Manager

ENDORSEMENT:
Reviewed and Approved,

Ralph A. Butler, P.E.
Director

xc: Reactor Advisory Committee
Reactor Safety Subcommittee
Dr. Garnett S. Stokes, Provost
Dr. Henry C. Foley, Senior Vice Chancellor for Research
Mr. Alexander Adams Jr., U.S. Nuclear Regulatory Commission
Mr. Geoffrey Wertz, U.S. Nuclear Regulatory Commission
Mr. Johnny Eads, U.S. Nuclear Regulatory Commission

Attachments:

1. MURR Drawing No. 1905, Sheet 1 of 1, "Control Blade Drop Timer Circuit"
2. Modification Record 72-7, "Additional In-Pool Fuel Storage Basket"
3. Modification Record 76-3, "Upper Z Spent Fuel Storage"
4. Modification Record 76-3, Revision, "Spent Fuel Storage"
5. Modification Record 91-3, "Temporary Additional In-Pool Fuel Storage Baskets"
6. Modification Record 91-3, Addendum 1, "Replacement of the Existing X, Y, MH-X, and MH-Y Fuel Storage Baskets With New X and Y Baskets"
7. Volume of the Primary Coolant System
8. Meteorological Data (Wind Speed and Class) – 1961 to 1969
9. Meteorological Data (Wind Speed and Class) – 1970 to 1990
10. Meteorological Data (Wind Speed and Class) – 1961 to 1990
11. 10 CFR 835, Appendix C, "Derived Air Concentration (DAC) for Workers from External Exposure during Immersion in a Cloud of Airborne Radioactive Material"
12. MicroShield 8.02 Dose Calculations for a Fuel Handling, Fuel Failure, and Fueled Experiment Failure Accidents
13. Stack Effluent Releases – Calendar Years 2005 to 2014

JACQUELINE L. BOHM
Notary Public-Notary Seal
STATE OF MISSOURI
Commissioned for Howard County
My Commission Expires: March 26, 2019
Commission # 15634308

State of Missouri
County of Boone
The foregoing document was acknowledged before me this 1 day of October, 2015
Jacqueline L. Bohm, Notary Public
My Commission Expires: March 26, 2019

1. *In the MURR SAR, Sections 1.4.2, 4.2.2.4, and 4.5.3, the control blade drop time is expressed as "insertion to 20% of the withdrawn position in less than 0.7 seconds." SAR Section 3.5.2 describes the control blade drop process including the effect of the dashpot, but does not describe the method for determining the drop time nor does it explain the basis for the 80 percent insertion times. The scram times and reactivity worths used or assumed for the various analyses in the SAR are not clearly described or provided. NUREG-1537, Section 4.5.3, "Operating Limits," provides guidance that the analysis for the shutdown reactivity for all operational conditions should be described.*

   a. *Explain the MURR process for determining the control blade insertion times and the associated control blade insertion reactivity per blade. Provide typical control blade full insertion scram times and reactivities, or justify why no additional information is needed.*

Control blade insertion times are determined by a Control Blade Drop Timer Circuit (see Attachment 1). When a reactor scram signal is initiated, the control current to the electromagnet, which engages the control rod drive mechanism (CRDM) to the anvil of the control blade-lift rod assembly, is removed by an electro-mechanical relay contact which allows the control blade to drop and start a blade drop timer/chronometer count. At the 20% withdrawn position (or 80% inserted), a digital fiber optic sensor, which provides a NPN (Not Pointing In) output to the control unit when triggered, causes the electro-mechanical relay to change state stopping the blade drop timer/chronometer. The control blade drop time is then displayed on a meter on the reactor control room instrument panel. Table 1 provides the minimum, average and maximum drop times of all four (4) shim control blades for the years 2010 to 2014.

Table 1 – Control Blade Drop Times (Years 2010 to 2014)

Time (In Seconds)	**Control Blade**			
	'A'	**'B'**	**'C'**	**'D'**
Minimum	0.46	0.49	0.45	0.48
Average	0.50	0.54	0.50	0.52
Maximum	0.59	0.58	0.54	0.54

Current MURR Technical Specification 3.2.c requires the capability of inserting the shim control blades to their 20% withdrawn position (or 80% inserted) in less than 0.7 seconds. This ensures prompt shutdown of the reactor in the event a reactor scram signal, manual or automatic, is received. The 20% withdrawn position is defined as 20% of the control blade full travel of 26 inches measured from the fully inserted position. Below the 20% withdrawn position the control blade fall is cushioned by a dashpot assembly. Approximately 91% of the control blade total worth is inserted at the 20% position. This is an original design feature of the reactor and its purpose has not been altered in 49 years of operation. The same Technical Specification will remain in the relicensing Technical Specifications.

The measured and calculated values for reactor core excess reactivity and shutdown margin are provided below to demonstrate the safe shutdown capability with only three (3) out of the four (4)

shim control blades inserted to their 20% withdrawn position (also assumes the regulating blade is fully withdrawn). Some of this information, calculated using older computer programs, can also be found on Table 4-12 of the SAR.

Typical MURR operations involve a core change-out every week with eight (8) xenon-free fuel elements in various stages of burnup (mixed core operation) used at startup. The reactor core excess reactivity and shutdown margin values are verified after the weekly core change-out. The verification is done during reactor startup, when the cold, clean critical control blade height is measured. This critical control blade position, along with the known integral control blade worth, is used to estimate reactor core excess reactivity.

Measured Values:

Table 2 provides the measured values of shim control blade worth, reactor core excess reactivity and shutdown margin in comparison to the Technical Specification limit of -0.020 Δk/k.

Table 2 – Summary of Key Measured Reactor Data

Parameter	**Value (Δk/k)**
Typical total shim control blade worth	0.1364
Typical total shim control blade worth at 80% inserted	-0.1127
Typical shim control blade worth at 80% inserted with the highest worth control blade excluded (or fully withdrawn)	-0.0787
Maximum reactor core excess reactivity after weekly core change-out	+0.0400
One-year average of reactor core excess reactivity (over 69 core change-outs)	+0.0290
Typical core sub-criticality with 3 shim control blades at 80% inserted and the 4th control blade excluded (or fully withdrawn)	-0.0387
Minimum shutdown margin allowed by Technical Specifications	-0.0200

Calculated Values:

Reactor core excess reactivity and shutdown margin values were also calculated using the detailed MCNP MURR core models. Two separate cases were considered for the MCNP calculations: (1) using all fresh fuel elements (license possession limit only allows 6 fresh fuel elements onsite) and all fresh shim control blades (most conservative), and (2) with a mixed core loading and mixed burnup control blades (typical MURR operation). Table 3 provides the calculated values.

Table 3 – Summary of Key Calculated Reactor Data

Parameter – All Fresh Fuel and Fresh Control Blades Case	**Value (Δk/k)**
Reactor core excess reactivity	0.0865
Total shim control blade worth	0.1740
Core sub-criticality with 3 shim control blades at 80% inserted and highest worth control blade excluded (or stuck fully withdrawn)	-0.0324

Parameter – Mixed Core / Mixed Control Blades Case	**Value (Δk/k)**
Reactor core excess reactivity	0.0445
Total shim control blade worth	0.1517
Core sub-criticality with 3 shim control blades at 80% inserted and highest worth control blade excluded (or stuck fully withdrawn)	-0.0580

The measured and calculated values for reactor core shutdown margin show that even with three (3) shim control blades at their 20% withdrawn position (and the regulating blade and highest worth shim control blade fully withdrawn), the minimum reactor core shutdown margin required by the Technical Specifications is easily satisfied.

b. *Explain which analyses documented in the SAR utilize the assumptions described in Item a. above regarding control blade insertions, withdrawals, and scrams (e.g., blade withdrawal from subcritical, control blade run in, insertion of excess reactivity, etc.). For each such event, provide the control blade motion speeds and reactivities utilized to provide the SAR analyses, or justify why no additional information is needed.*

The RELAP code is used to perform the accident analyses of the Loss of Coolant Accident (LOCA) and the Loss of Flow Accident (LOFA). The two (2) LOCA analyses determine what would occur if there were a double-ended shear of the 12-inch primary coolant piping on both sides of either the cold-leg isolation valve V507B or the hot-leg isolation valve V507A. To envelope the LOFA, five (5) different scenarios were analyzed. The inadvertent loss of pressurizer pressure was found to be the worst-case accident so it is the one described in the SAR.

In the RELAP analyses, key reactor coolant parameters that are monitored by reactor safety system instrumentation can have trip values set for them at the appropriate coolant loop locations. In the RELAP modeling, a 150 millisecond time delay is set between the time a scram signal is received and the modeling of when the "insertion" of the control blades start. The insertion is covered by an input table of fission and gamma reactor power as per set time steps after the reactor scrams. The code calculates linear values between these data points.

Table 4 below provides the power assumed by RELAP seconds after shutdown compared to the calculated power after shutdown, assuming 30 days of full power operation, using equation 2.66 from Nuclear Reactor Engineering 3rd Edition by Samuel Glasstone and Alexander Sesonske[1]. The equation is given in the upper right corner of the page along with the values of variables *a* and *b* to use depending on which time step after shutdown the decay power applies. During the first ten (10) seconds, the RELAP values are very conservative and more than double the calculated decay power except for the values for 8, 9 and 10 seconds. From 10 to 150 seconds, the RELAP values are conservative by 17%. From 180 seconds to 10,000 seconds, the RELAP values average being 3.8% more conservative than the equation calculated values. Therefore, the RELAP analyses use conservative calculated values of reactor decay heat after the scram, which would correspond to slower insertion of the control blades.

See the response to RAI 6.a for control blade drop times related to Insertion of Excess Reactivity accidents.

References:

[1]Glasstone, S. and Sesonske, A., *Nuclear Reactor Engineering 3rd Edition*, prepared under Technical Information Center, United States Department of Energy.

Table 4 – Comparing RELAP Decay Heat to Calculated Decay Heat
(Nuclear Reactor Engineering 3rd Edition: Equation 2.66)

t_s	Power MW	Power MW			
0	11.0	11.0			
0.1	[A]*7.9906*	0.5099			
0.3	1.9717	0.4578			
0.7	1.2597	0.4201			
1.0	1.0373	0.4048			
2.0	0.9309	0.3761	(s)	*a*	*b*
3.0	0.8481	0.3599	0.1 to 10	12.05	0.0639
5.0	0.7345	0.3400	10 to 150	15.31	0.1807
6.0	0.6931	0.3331	150 to 8E8	27.43	0.2962
7.0	0.6576	0.3273			
8.0	0.6292	0.3223			
9.0	0.6044	0.3180			
10	0.5819	0.3141	0.4970		
20	0.4506		0.4317		
30	0.4100		0.3970		
40	0.3869		0.3740		
50	0.3698		0.3569		
60	0.3563		0.3434		
70	0.3453		0.3324		
80	0.3360		0.3231		
90	0.3280		0.3150		
100	0.3210		0.3080		
120	0.3090		0.2961		
150	[A] *0.3072*		0.2821	0.3230	
180	0.3053			0.3050	
200	0.3015			0.2951	
240	0.2849			0.2786	
300	0.2659			0.2595	
400	0.2431			0.2368	
420	0.2395			0.2331	
540	0.2214			0.2150	
600	0.2142			0.2078	
800	0.1957			0.1893	
1,000	0.1824			0.1760	
2,000	0.1462			0.1398	
4,000	0.1167			0.1103	
6,000	0.1020			0.0957	
8,000	0.0927			0.0863	
10,000	0.0860			0.0796	

Equation 2.66

$P/P_0 \approx 5E\text{-}3 * a * [t_s^{-b} - (T_0 + t_s)^{-b}]$

t_s = seconds after shutdown

T_0 = 30 days operating period prior to shutdown

Note A: RELAP does not have a value entered for 0.1 seconds, but the linear value between 0 and 0.3 seconds is 7.9906. Value for 150 seconds is linear between 120 and 180 seconds.

2. *NUREG-1537, Section 9.2, "Handling and Storage of Reactor Fuel", provides guidance that the licensee provide analyses and methods to demonstrate the secure storage of new and irradiated fuel with a criticality limit of keff < 0.90. The NRC staff's review of the MURR SAR and Hazards Summary Report could not find a criticality analysis supporting the use of any fuel storage locations outside of the core. Identify the locations that may be used for the storage of new or irradiate fuel, and provide supporting criticality analyses, or justify why no additional information is needed.*

As stated in SAR Section 9.2.1, there are 88 in-pool storage locations for new or irradiated fuel elements. These storage locations are situated in three (3) areas within the reactor pool and are designated as the "X," "Y" and "Z" storage baskets. The "Z" storage basket contains 48 fuel element storage locations; consisting of two (2) levels, referred to as "upper" and "lower," of 24 locations per level. The "X" and "Y" storage baskets each contain 20 fuel element storage locations. There are eight (8) storage locations for new, fresh fuel elements in the fuel vault.

The MURR facility was originally designed and built with only 28 in-pool fuel element storage locations. The "X" and "Y" storage baskets each had only six (6) storage locations at the time while the "Z" storage basket consisted of 16 storage locations – two racks (6 and 10) in the lower level. In 1972, due to an increase in operating schedule and with an uprate in power from 5 to 10 MWs in the near future, an additional rack of eight (8) storage locations was added to the lower level of the "Z" basket, thus providing a total of 36 fuel element storage locations in the pool (24 in the "Z" basket). Modification Record 72-7, "Additional In-Pool Fuel Storage Basket," documents the installation of the eight (8) element rack (Attachment 2). On page 2a of the Modification Record, the following is stated: *"To determine the safety of installing an additional fuel rack between the present two, the system was modeled using the Exterminator II multi-group neutron diffusion program. The physical model consisted of three adjacent rows of eight clean 775 gram U^{235} fuel elements. Each fuel element was surrounded by 0.25" thick boral as is the case in the actual design. For the fully loaded rack, the calculated K_{eff} limit was 0.714."* A 1/M criticality plot of the storage basket was also performed to verify the Exterminator II code results.

In 1976, a 14 element rack was added to the upper level of the "Z" storage basket which increased the overall capacity of the "Z" storage basket from 24 to 38. Modification Record 76-3, "Upper Z Spent Fuel Storage," documented the installation of the additional 14 fuel element storage locations (Attachment 3). On page 4 of the Modification Record, the following is stated: *"The addition of another level of elements was modelled using the Exterminator II neutron diffusion code. The presence of 24 rather than 14 elements on the second level was used for a "factor of safety." The code predicts a value for K_{eff} of 0.748. Thus, the above criteria is satisfied for fuel storage."* A 1/M criticality plot of the storage basket was also performed to verify the Exterminator II code results.

In 1978, a 10 element rack was added to the upper level of the "Z" storage basket which increased the overall capacity of the "Z" storage basket from 38 to 48. Modification Record 76-3, Revision, "Spent Fuel Storage," documents the installation of the additional 10 fuel element storage locations (Attachment 4). A 1/M plot criticality was also performed to verify the Exterminator II code results

stated in Modification Record 76-3, which conservatively modeled 24 fuel elements instead of just 14 elements.

Because the criticality analyses for the "Z" storage basket are somewhat dated and vaguely documented, MURR performed an updated criticality analysis of the upper and lower levels of the "Z" storage basket using the general-purpose Monte Carlo N-Particle (MCNP) code. The following describes the methodology and results.

The "Z" storage basket stores fuel elements that have burnups of 0 to 150 MWds. The baskets are lined with 26- to 29-inch tall sheets of 0.25- to 0.3125-inch thick B_4C (BORAL®) as the absorbing material to prevent the stored fuel configuration from reaching criticality. Figure 1 shows the layout (i.e. a detailed MCNP model) of the lower "Z" storage basket configuration.

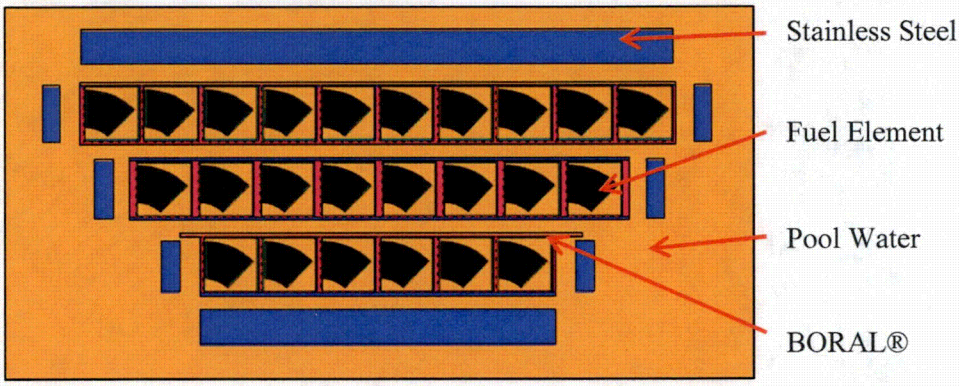

Figure 1 – Detailed MCNP model of the Lower "Z" Storage Basket Configuration

The upper 'Z' storage basket configuration layout shown in Figure 2 is very similar to the lower basket with the exception of lead shields surrounding the basket instead of stainless steel, as in the lower basket.

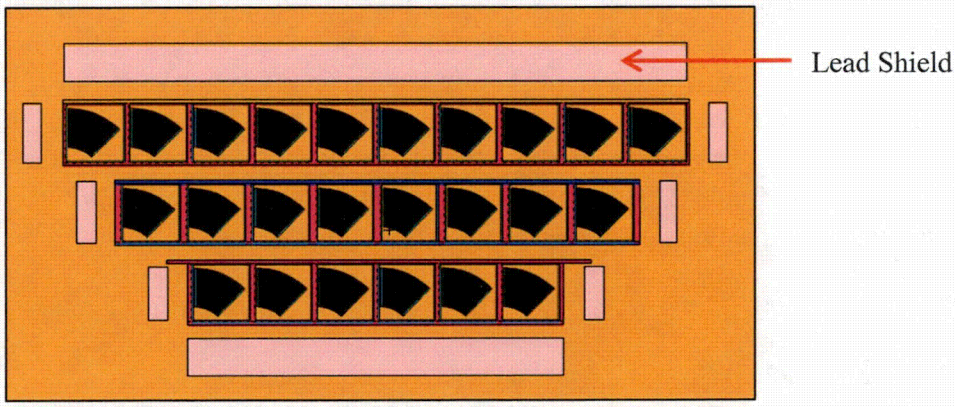

Figure 2 – Detailed MCNP model of the Upper "Z" Storage Basket Configuration
(Lead shields instead of stainless steel)

The active region of the fuel elements in the lower and upper baskets is separated in height by approximately seven (7) inches. Each fuel element in every storage location is modeled in full detail, with all 24 aluminum clad UAl_x fuel plates. Figure 3 shows very detailed MCNP modeling of an individual MURR fuel element and the elements in their lower and upper "Z" storage basket configurations.

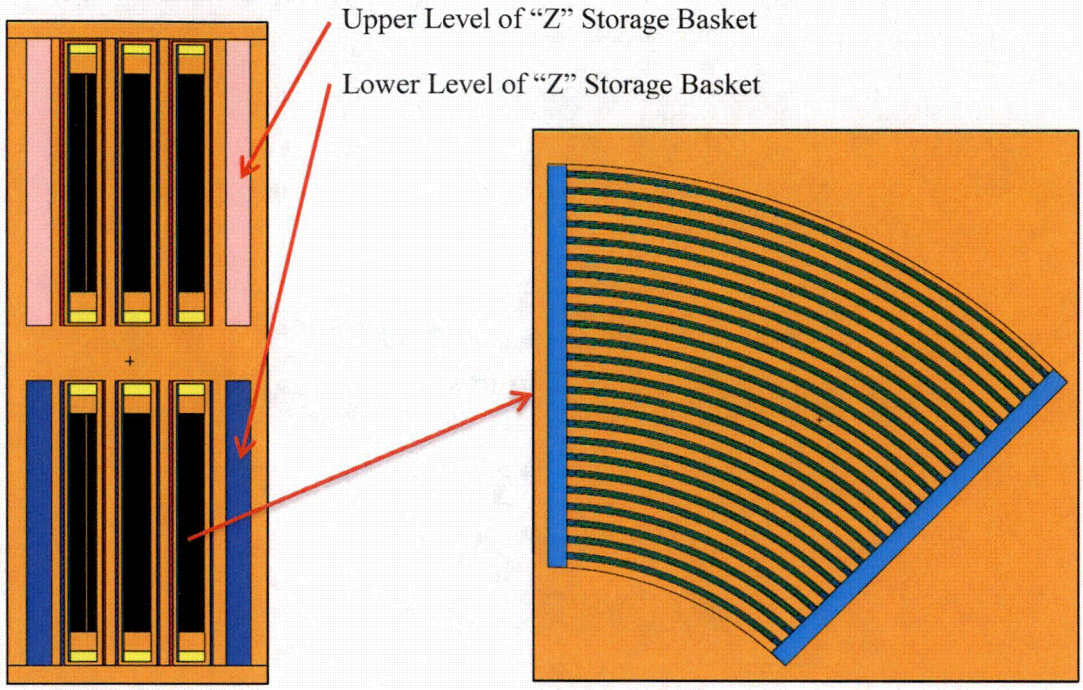

Figure 3 – Panels Showing Detailed MCNP Modeling of the Fuel Elements; the Left Panel Showing the Axial Configuration of the Fuel Elements in the Lower and Upper "Z" Storage Baskets and the Right Panel Showing a Cross-sectional View of a MURR Fuel Element

Criticality (i.e. KCODE) calculations using MCNP version 5 with the ENDF/B-VII.0 data libraries were performed for two detailed instances of the "Z" storage basket configuration: (1) a single basket (lower), and (2) both lower and upper baskets together. All calculations were performed for 20 million source particles. For the two instances, the basket(s) were filled to their maximum capacities (24 fuel elements) with fresh, highly-enriched uranium (HEU) UAl_x MURR fuel elements. These configurations describe the most conservative, worst-case conditions for the "Z" storage baskets. Table 1 provides the computed K_{eff} using the MCNP models of the two configurations of the "Z" storage basket.

Table 1 – K_{eff} Values for Worst-Case "Z' Storage Basket Configurations

Configuration	Fuel Status	Storage Capacity	K_{eff}
Lower	Fresh	Max – 24 Fuel Elements	0.49885
Lower + Upper	Fresh	Max – 48 Fuel Elements	0.55862

On receipt, fresh (i.e., un-irradiated fuel) fuel elements may be stored outside the reactor pool in a dry, vaulted location. The elements are stored separately in a plywood rack filled with (powered) boric acid to prevent reaching criticality. Figure 4 shows a detailed MCNP model of the dry storage configuration containing the maximum allowable number of on-site stored fresh MURR fuel elements (i.e., six fuel elements). Note: Amended Facility License No. R-103, Section 2.B.(2), states, "...to receive, posses, and use up to 60 kilograms of contained uranium-235 of any enrichment, providing that no more than 5 kilograms of this amount is unirradiated;...". Six MURR fuel elements, containing 775 grams of uranium-235 each, equals 4.65 kilograms.

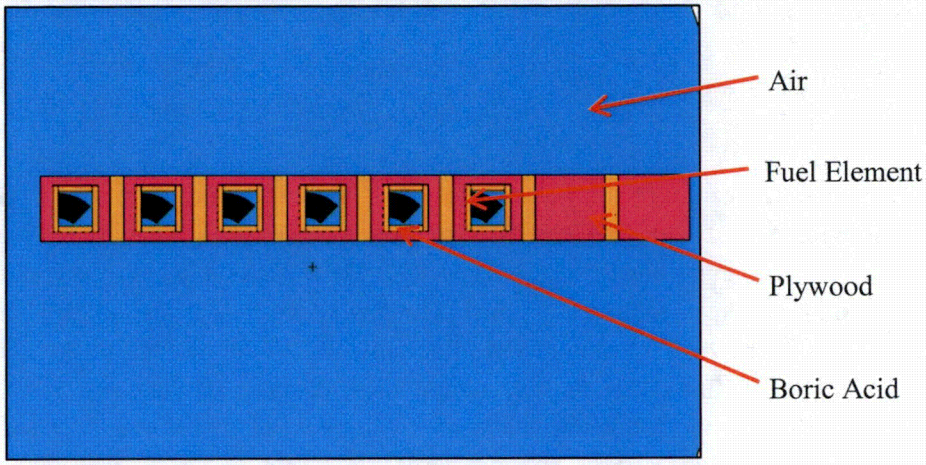

Figure 4 – Detailed MCNP Model Showing Fresh Fuel Dry Storage Filled to Possession Limit

To establish a full-scope criticality safety study, in addition to the configuration described in Figure 4, two other configurations were also defined to capture the worst-case scenarios: (1) a flooded configuration storing the maximum allowable number of on-site stored fresh fuel, i.e., six fresh fuel elements (see Figure 4 where air is replaced with water), and (2) a flooded configuration with the rack filled to its maximum capacity which equals eight fresh fuel elements (see Figure 5).

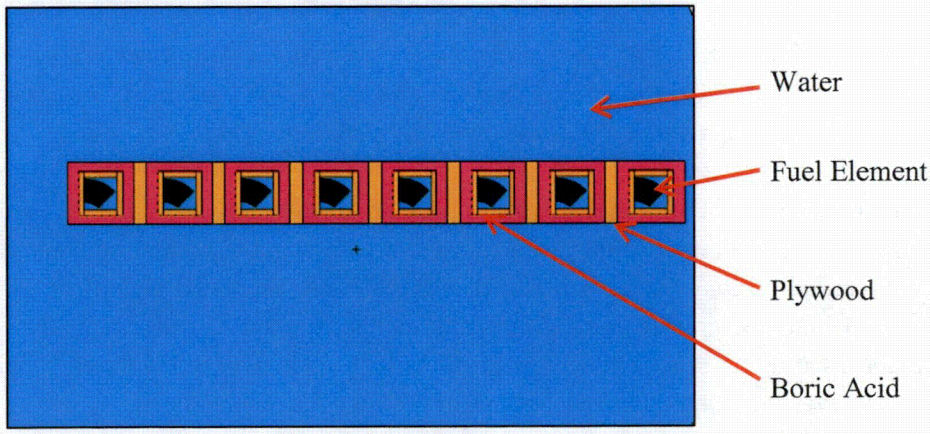

Figure 5 – Detailed MCNP Model Showing Fresh Fuel Dry Storage Filled to Physical Capacity

Again, the criticality (i.e. KCODE) calculations performed using MCNP version 5 with the ENDF/B-VII.0 data libraries. All calculations were performed for 20 million source particles.

The computed K_{eff} using the MCNP models are reported in Table 2 for all three instances of most conservative, worst-cases (in terms of attaining criticality) for the fresh fuel storage configurations.

Table 2 – K_{eff} Values for Worst-Case Fresh Fuel Storage Configurations

Configuration	Fuel Status	Storage Capacity	K_{eff}
Dry (Air)	Fresh	License Max – 6 Fuel Elements	0.02344
Flooded	Fresh	License Max – 6 Fuel Elements	0.36228
Flooded	Fresh	Storage Max – 8 Fuel Elements	0.36258

In 1991, due to the inability to ship spent fuel from the facility because the cask (GE-700) that was used to ship research reactor fuel was removed from service, two (2) new fuel storage baskets were fabricated to increase the onsite storage capacity. These baskets, which were attached to the "X" and "Y" storage baskets, each held 12 fuel elements and were designated "MH-X" and "MH-Y." Modification Record 91-3, "Temporary Additional In-Pool Fuel Storage Baskets," documented the installation of the additional 24 fuel element storage locations (Attachment 5). On page 2 of the Modification Record, the following is stated: *"The evaluation performed for each MH1A basket will include a criticality analysis (KENO), a boral plate verification, thermal analysis and 1/M determination when it is first loaded."*

In 2004, the "X," "Y," "MH-X" and "MH-Y" fuels storage baskets were replaced with new "X" and "Y" storage baskets, which increased the total storage capacity in these baskets from 36 to 40 locations. Modification Record 91-3, Addendum 1, "Replacement of the Existing X, Y, MH-X, and MH-Y Fuel Storage Baskets with New X and Y Baskets," documents the installation of the new "X" and "Y" storage baskets (Attachment 6). This Modification Record contains a detailed description of the criticality analysis performed for these two baskets using the MCNP code. On page 4 of the Modification Record, the following is stated: *"The MCNP model was used to calculate a K_{eff} value of 0.635 for one fuel basket fully loaded with twenty (20) "fresh" 775 gram U-235 fuel elements. This predicted value is well below the Technical Specification limit of 0.9. This value will also be validated by 1/M criticality determination."*

In summary, new MCNP modeling of the upper and lower levels of the "Z" storage basket and fresh fuel storage in the vault, using conservative, worst-case assumptions of all fresh fuel elements, indicate K_{eff} values much less than the MURR Technical Specification Limit of 0.9 (no value was calculated greater than 0.56). Additionally, the 2004 criticality analysis of the "X" and "Y" storage baskets (see Attachment 6) calculated a K_{eff} value of 0.635 for each basket, once again, using conservative, worst-case assumptions of all fresh fuel elements.

3. *NUREG-1537, Section 4.5.1, "Normal Operating Conditions," and Section 4.5.2, "Reactor Core Physics Parameters," provide guidance that the licensee should identify their analytical methods, including calculations of individual control blade worths, core excess reactivity, and coefficients of reactivity, and compare the results with experimental measurements. The MURR SAR, Section 4.5 states that analyses have been performed using PDQ, EXTREMINATOR, and BOLD-VENTURE codes using Rθ, RZ, and RθZ models. The NRC staff noted other analyses (e.g., the RAI responses supporting the NRC staff review of License Amendment No. 36, ADAMS Accession Nos. ML11237A088 and ML12150A052) used Estimated Critical Position (ECP) comparisons with the Monte Carlo Neutron Production code. The design code used to support the T&H analysis appears to be DIF3D. The NRC staff is not clear as to which analytical method is the final supporting analysis to be reviewed for the MURR license renewal application. The final supporting analysis should be the source for information used in accident and event analysis (e.g., peaking factors, control blade worths). Furthermore, in response to RAI 4-14.c., (ADAMS Accession No. ML103060021), it is not clear how the stuck control blade was determined, what the relative reactivity worth is for the other control blades in the shutdown margin (SDM) analysis, and whether they are calculated, measured, or compared. The following information is needed:*

   a. *Identify the neutronics code used as the basis for the MURR License Renewal Application, or justify why this information is not needed.*

Historically, neutron physics modeling and analyses at MURR have been performed using several multi-group and multi-dimensional neutron diffusion theory codes such as PDQ, EXTERMINATOR-II and BOLD VENTURE. Since the BOLD VENTURE core model was benchmarked against the destructive analysis of a highly-enriched uranium (HEU) MURR fuel element for the license renewal application submitted to the NRC in August of 2006, MURR used results provided by the above set of neutronics codes.

Since then, MURR core physics analyses have switched to using newer, state-of-the-art programs such as MCNP for neutronic analysis. For a compact core such as MURR, it is preferable to use a transport theory code to capture the rapidly changing spectra across the various regions. Therefore, MCNP (in combination with other activation and depletion programs such as ORIGEN) is now routinely used for all calculations of core K_{eff}, critical control blade height, detailed power distribution, and experimental fluxes/reaction rates.

As part of the on-going collaboration, which started in 2006, between MURR staff and Argonne National Laboratory (ANL) analysts for the purpose of determining the feasibility of converting MURR from HEU to low-enriched uranium (LEU) fuel, ANL has assembled a neutronics analysis code suite utilizing WIMS-ANL, REBUS-DIF3D and REBUS-MCNP. Figure 1 below illustrates the linkage of the codes in the analysis suite.

The suite of programs, or codes, was used to provide detailed (radial, axial and azimuthal) fuel composition for partially burned fuel elements. Since MURR routinely operates with a fuel cycle utilizing a mixed burnup core, realistic experimental flux, reaction rates and power peaking values have to be evaluated for the typical core weekly cycles rather than for an all-fresh core. The

detailed fuel composition data obtained is then subsequently used in a MCNP calculation to obtain the worst-case power peaking factors and heat flux values used in the thermal-hydraulic analysis.

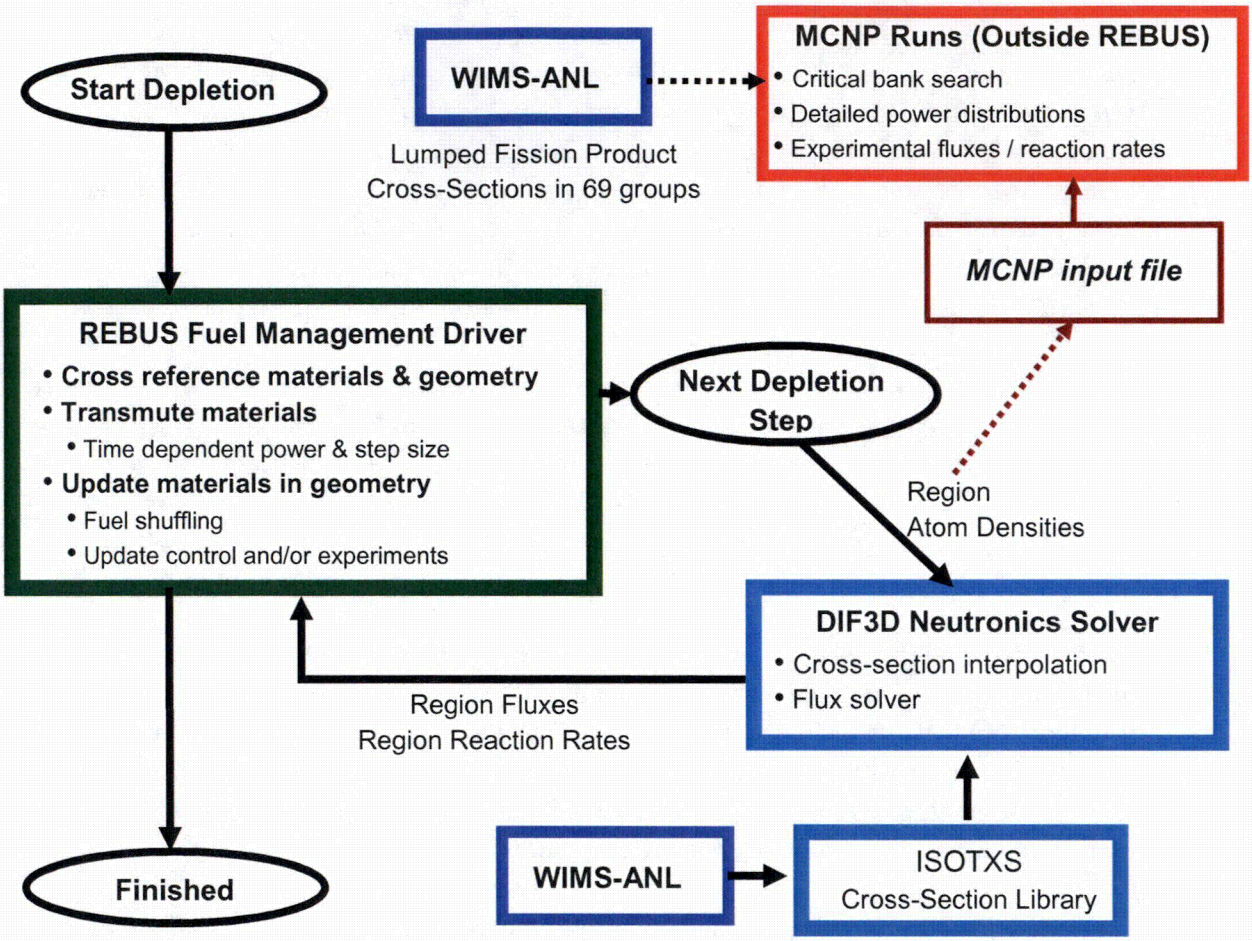

Figure 1 – Linkage of the Codes Used in the Analysis Suite

The following is a brief description of each of the programs within the ANL neutronic analysis suite:

WIMS-ANL: WIMS-ANL is a one-dimensional lattice physics code used to generate burnup dependent, multi-group cross sections. The code utilizes either 69- or 172-group libraries of cross-section data for 123 isotopes generated from ENDF-6. A customized 10-group structure was developed by ANL based on the neutron spectrum that exists in the MURR core. This multi-group data can be used in MCNP and REBUS-MCNP analyses of depleted cores.

REBUS-DIF3D: DIF3D is a multi-dimensional, multi-group neutron diffusion code that can model systems in a number of geometries. REBUS is a depletion code that utilizes neutron fluxes from a neutronics solver and cross-section data to solve isotopic transmutation calculations. A

detailed Θ-R-Z diffusion MURR model was developed for DIF3D. The depleted core characteristics (plate-by-plate and axially-segmented atom densities) can be saved and passed on to MCNP for more detailed neutronics analyses.

MCNP: MCNP is a continuous energy Monte Carlo neutron transport code. MCNP is capable of modeling the heterogeneous details of the MURR fuel elements, core structures, and experimental facilities while capturing the rapidly changing spectra across these various regions. Using the 69-group lumped fission product library generated by WIMS-ANL, the code can be used to model cores of depleted and fresh elements.

ANL had performed extensive work to validate the above set of neutron physics codes and models for application to MURR. The MCNP and DIF3D models were benchmarked against available experimental data [Ref. 1].

In order to speed up routine neutronics calculations, where such detailed axial, radial and azimuthal fuel composition is not necessary, MURR utilizes the MONTEBURNS program. MONTEBURNS is a coupled MCNP-ORIGEN code system developed by Los Alamos National Laboratory (LANL). It utilizes the capabilities of ORIGEN 2.2 for isotope generation and depletion calculations and that of MCNP5 for continuous energy, flux and reaction rate as well as criticality calculations.

MONTEBURNS by itself is not designed to handle transient calculations such as during the period from reactor startup through critical and then on to steady-state reactor operation since it involves control blade motion due to poison buildup as well as from fuel depletion. However, with the help of in-house developed routines, a code system including MCNP and MONTEBURNS was developed to perform routine reactor physics calculations that can handle transient cases.

The flow diagram for the suite of codes implemented at the MURR for routine core-physics analysis is shown in Figure 2.

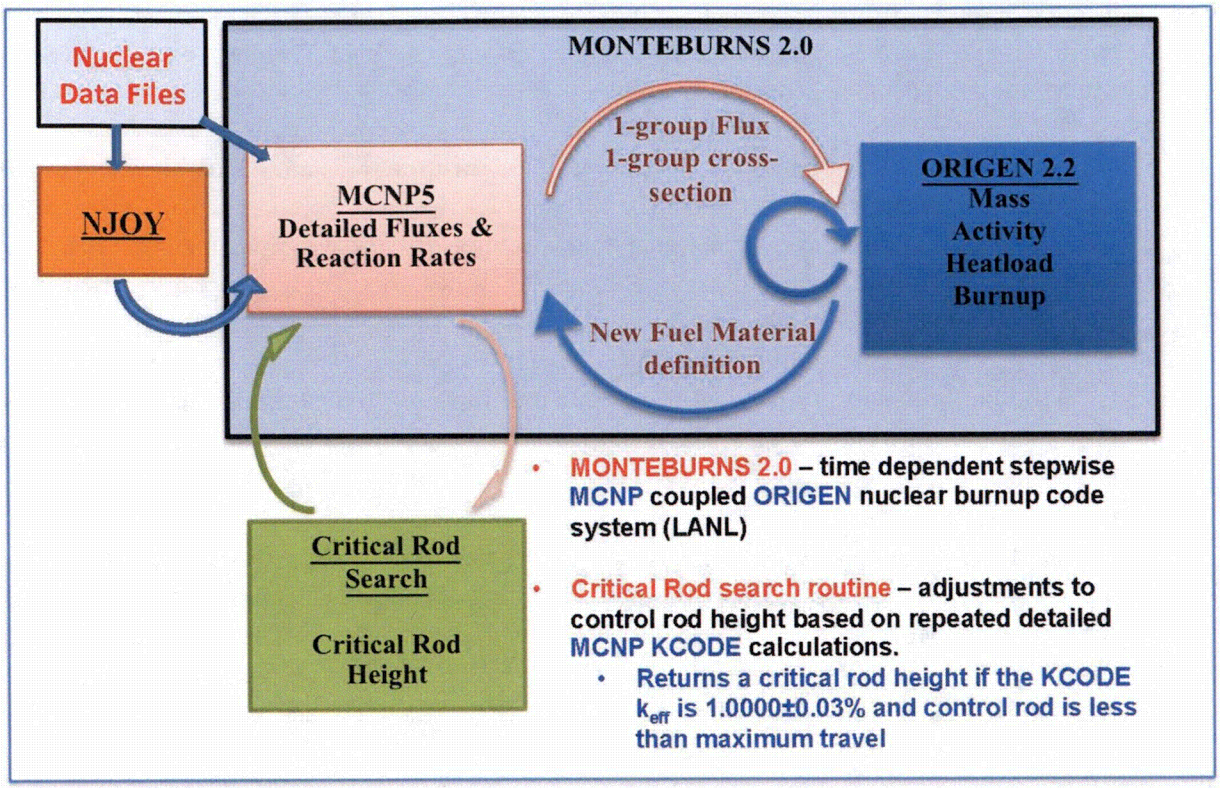

Figure 2 – Code Suite Flow Diagram Implemented at MURR for Routine Core Physics Analysis

These "routine" calculations utilize a very detailed MCNP MURR core model that has the following key capabilities:

- It can model MURR's "mixed-core" weekly fuel configuration, i.e., atom densities of various isotopes in the fuel matrix, for a range of fuel element burnups from fresh (0 MWd or no fuel depletion) to spent status. For the Estimated Critical Position (ECP) calculations, fuel element definitions can be individually selected from a fuel burnup database to simulate any combination of eight (8), xenon-free fuel elements.
- Similarly, it can include a mixture of four (4) independently depleted BORAL® shim control blades – each with a different axial and radial boron depletion profile based on its operational history (or core residence time).
- It has the ability to account for poison and gas buildup, and the reduction of beryllium atom density within the beryllium reflector based on its run time (from 0 to 8 years).
- The multiple samples that are irradiated in the high worth central flux trap region of MURR, as well as in the various positions within the graphite reflector region, are modeled accurately in order to reduce the error in the ECP calculation.
- With the help of a critical control blade height search routine, starting from an initial estimate of the critical control blade height, a series of MCNP5 criticality (KCODE) calculations can be performed in order to calculate the critical control blade height.

- In order to predict control blade travel during startup and subsequent steady-state operation, as well as recovery following an unplanned reactor shutdown, it can track the buildup of xenon-135 and other poisons in the core during reactor operation as well as the buildup and decay of the poisons during shutdown and restart using the isotope buildup and decay/loss capability of MONTEBURNS.

The system of codes and calculation methodology described previously has been benchmarked extensively using actual weekly core refueling and reactor startup data. The response to Question 2.a, which was included in the responses, dated July 31, 2015, to a Request for Additional Information made by the NRC (by letter dated June 18, 2015), contains the benchmark data.

References:

[1]Stillman, J., et al., *Technical Basis in Support of the Conversion of the University of Missouri Research Reactor (MURR) Core from Highly-Enriched to Low-Enriched Uranium – Core Neutron Physics*, ANL/RERTR/TM-12-30, Argonne National Laboratory, September 2012.

b. *Using results from that code provide the results of calculations and comparisons of the corresponding measurements for the ECP (or excess reactivity) for a known critical control blade configuration at zero power, no xenon condition, or justify why this information is not needed.*

The code system that is currently used for reactor physics analysis at MURR has been benchmarked extensively. One of the methods used for the benchmarking was by comparing the Estimated Critical Position (ECP) calculations from the detailed MCNP MURR model against the actual startup critical control blade height data from several weekly reactor startups. The detailed MCNP MURR core model includes depleted control blade data, beryllium aging effect (i.e., more and more gas molecules taking up the place of beryllium atoms with increasing run time), as well as detailed sample information present in the central flux trap region of the reactor core.

In Table 1 below, eight (8) separate cores were selected for comparison to verify consistency in the model's ability to predict the ECP accurately under various core states (mixed burnup) and flux trap sample conditions. The comparison was performed over an eight (8) month period. Note that the reactor startups at MURR require an occasional "strainer" startup – where initial critical control blade height data is obtained without any samples or sample holder in the central flux trap region, just pool coolant. Two such "strainer" startups are reported in Table 1.

Table 1 - Comparison of Estimated Startup Critical Control Blade Height vs. Measured Data

Core Configuration	Actual Critical Control Blade Height (Inches)	Predicated Critical Control Blade Height (Inches)	Predicated K_{eff}	Flux Trap Configuration
Week of 1/28/2013	16.79	16.67	0.99993	Strainer
Week of 2/04/2013	16.52	16.27	0.99975	Samples
Week of 4/29/2013	15.98	15.78	1.00017	Samples
Week of 6/10/2013	15.44	15.42	0.99995	Samples
Week of 8/05/2013	16.74	16.74	0.99985	Strainer
Week of 8/12/2013	15.71	15.61	0.99985	Samples
Week of 8/19/2013	15.84	15.84	1.00016	Samples
Week of 8/26/2013	15.64	15.69	1.00029	Samples

A negative bias of ~1.5% is seen in the predictions for the early benchmarks. After the additional refinements to the MCNP MURR model were made, the variations in the predictions were within ±0.8% of the actual critical control blade heights (last 5 entries of the Table).

c. *Provide calculated and measured control blade worths (Shim-1, Shim-2, Shim-3, Shim-4, and Regulating blades) for a given core configuration at a low power, no xenon condition, or justify why this information is not needed.*

Control blade usage at MURR is similar to the mixed core fuel cycle in that, at any given time, the four BORAL® shim control blades (Shim-1, Shim-2, Shim-3 and Shim-4, also referred to as control blades 'A,' 'B,' 'C' and 'D') are in various stages of burnup (core residence time) ranging from fresh (no burnup) to approximately 10 years. Every six (6) months, one of the control blades, and its associated offset mechanism, is removed from its installed location for inspection and replaced with another rebuilt offset mechanism and a different control blade with a different burnup status. This schedule satisfies the Technical Specification surveillance requirement of inspecting one (1) out of four (4) control blades every six (6) months so that every blade is inspected every two (2) years. In this way, a given control blade is cycled in and out of the reactor multiple times from the time it is new until it is no longer usable due to burnup.

Detailed control blade burnup studies undertaken at MURR have shown that the lower 6 to 8 inches of the control blade tip undergoes significant boron depletion with operation. Only the control blade tip experiences burnup since during steady-state, full power operation the control blades are almost fully withdrawn, resulting in the active neutron absorbing region of the blades being out of any significant neutron flux. Since accurate control blade worth information is crucial for reactor operation, every six (6) months when a control blade is replaced, a blade worth measurement of the installed control blade is performed.

Using the detailed MCNP core model of MURR, the differential and integral worth of the four shim control blades, and that of the stainless steel regulating blade, were calculated and the results are shown in Figures 3 through 6. The calculations were performed for fresh (non-depleted) control blades using a fresh core with no xenon. In order to show the effect of control blade depletion with operational history, the differential and integral worth curves of a single blade with a core residence time of over 9 years are also shown in Figures 7 and 8, respectively.

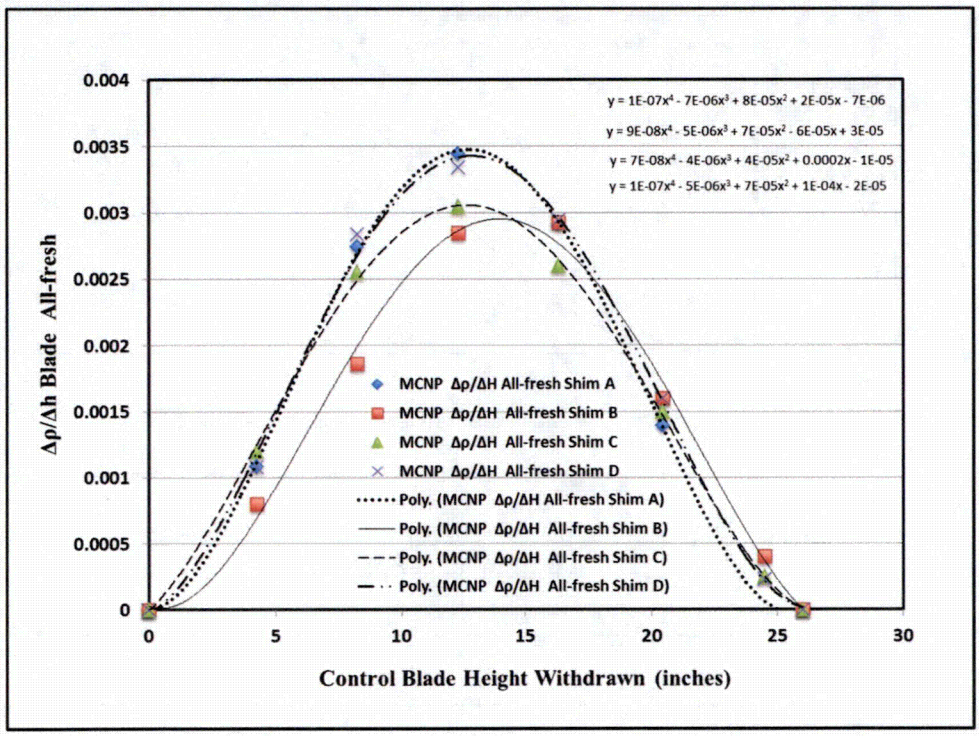

Figure 3 – Calculated Differential Worth Curves for All-Fresh Shim Control Blades in an All-Fresh Fuel Core Configuration

Shim control blades 'B' and 'C' are worth slightly less than control blades 'A' and 'D' since blades 'B' and 'C' are located near two highly "black" fast flux irradiation reflector elements situated on the west side of the core, adjacent to these control blades.

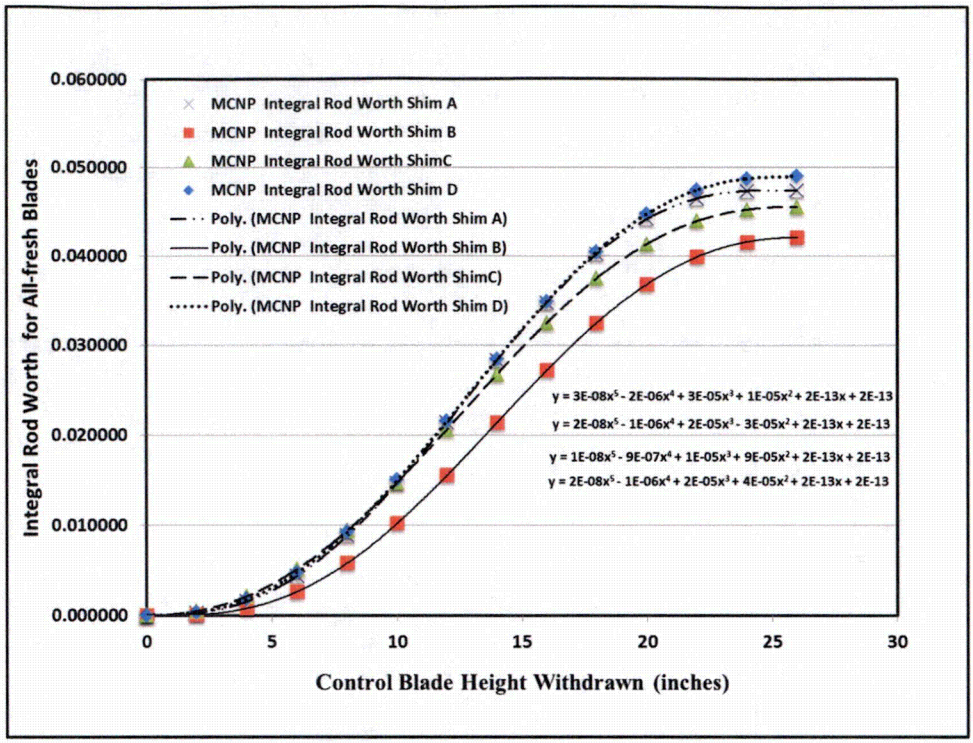

Figure 4 – Calculated Integral Worth Curves for All-Fresh Shim Control blades in an All-Fresh Fuel Core Configuration

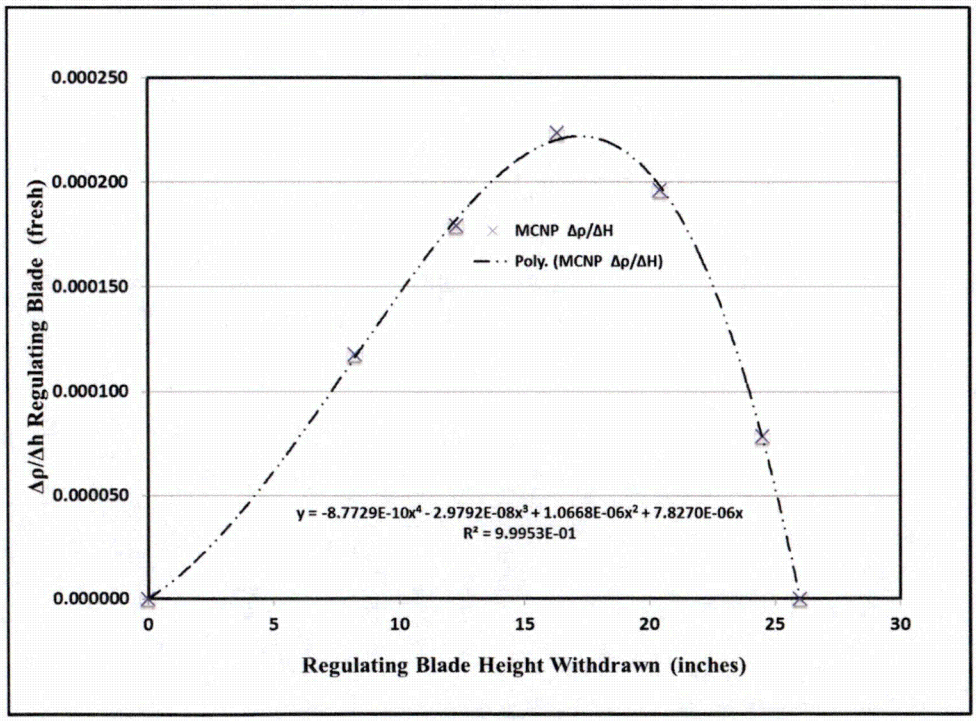

Figure 5 – Calculated Differential Worth Curve for a Fresh Regulating Blade in an All-Fresh Fuel Core Configuration

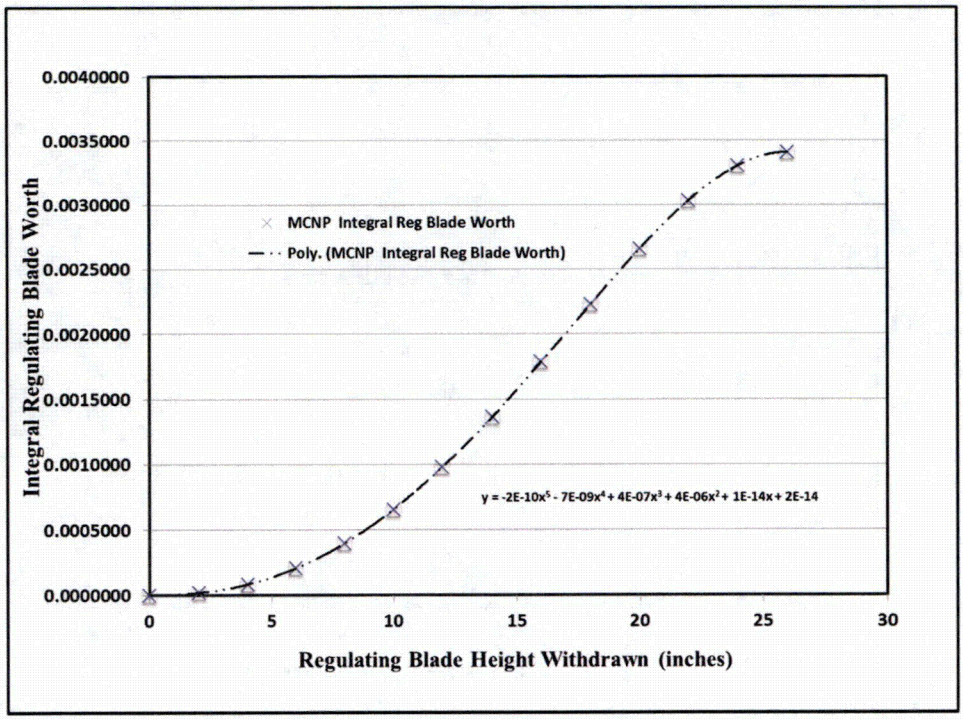

Figure 6 – Calculated Integral Worth Curve for a Fresh Regulating Blade in an All-Fresh Fuel Core Configuration

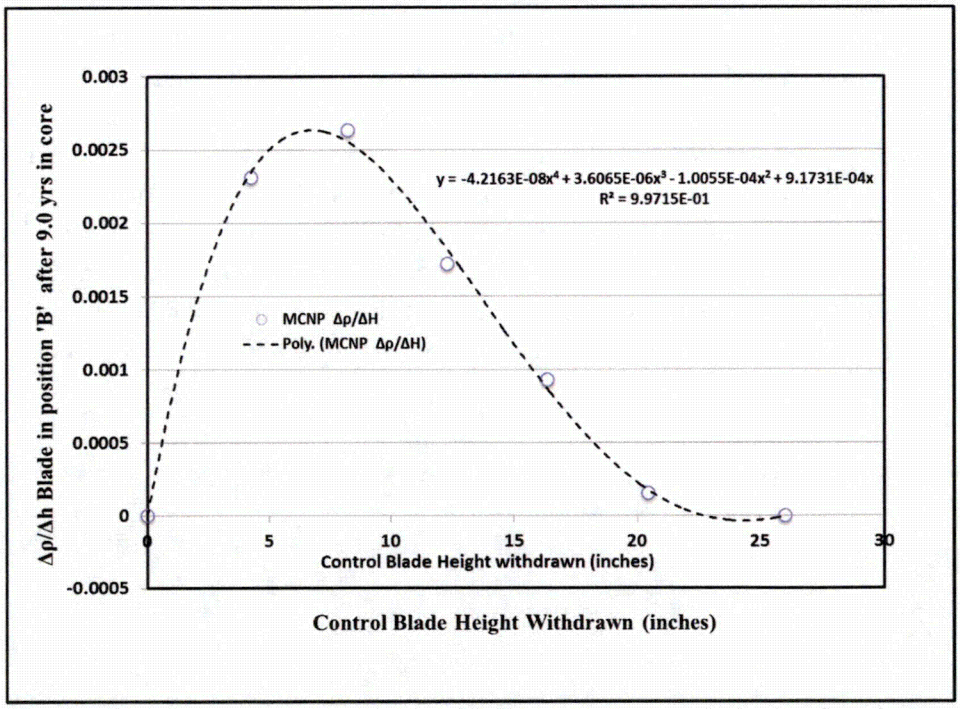

Figure 7 – Calculated Differential Worth Curve for Shim Control Blade 'B' (with 9.0 years of core residence time)

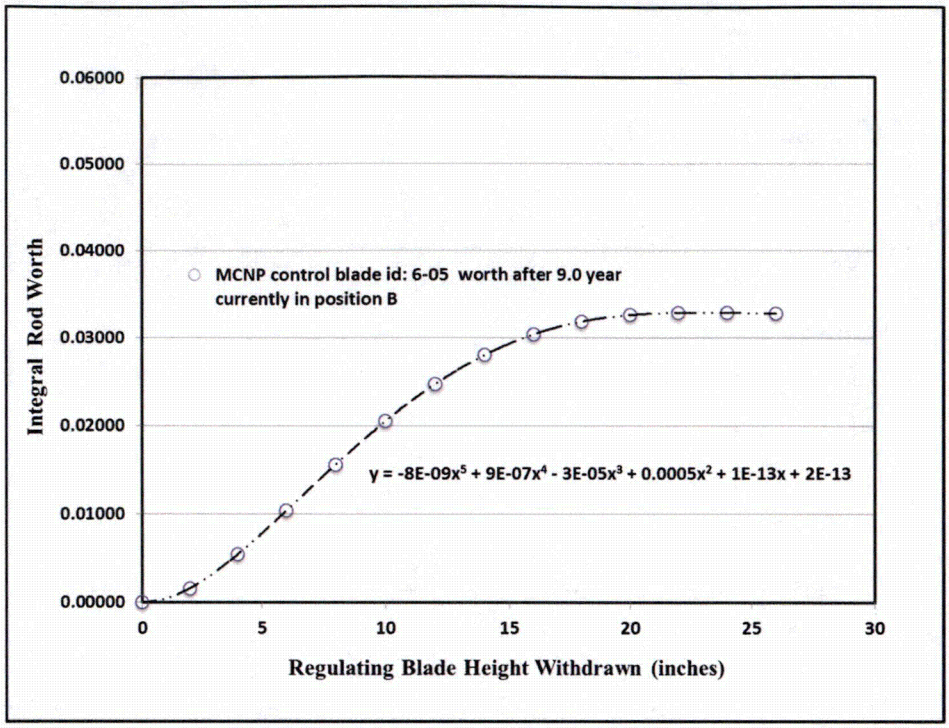

Figure 8 – Calculated Integral Worth Curve for Shim Control Blade 'B'
(with 9.0 years of core residence time)

As mentioned before, every time a control blade is changed out after a bi-annual inspection, the reactivity worth of the newly installed control blade is measured and the total bank worth curve (combined worth of all four shim control blades) is recalculated for the purpose of reactor physics calculations (such as ECP predictions, reactor core shutdown margin, estimation of unknown sample reactivity worths, etc.). To serve as a benchmark for the calculated control blade worths, a single blade was selected. Using a detailed mixed-core, mixed-burnup control blade model of the reactor configuration during the last Shim-4 (control blade 'D') inspection and replacement the blade worth 'D' measurements were simulated. The measured control blade worth curves for blade 'D' are compared against the blade worth curves calculated by the MCNP model. The results are shown in Figures 9 and 10.

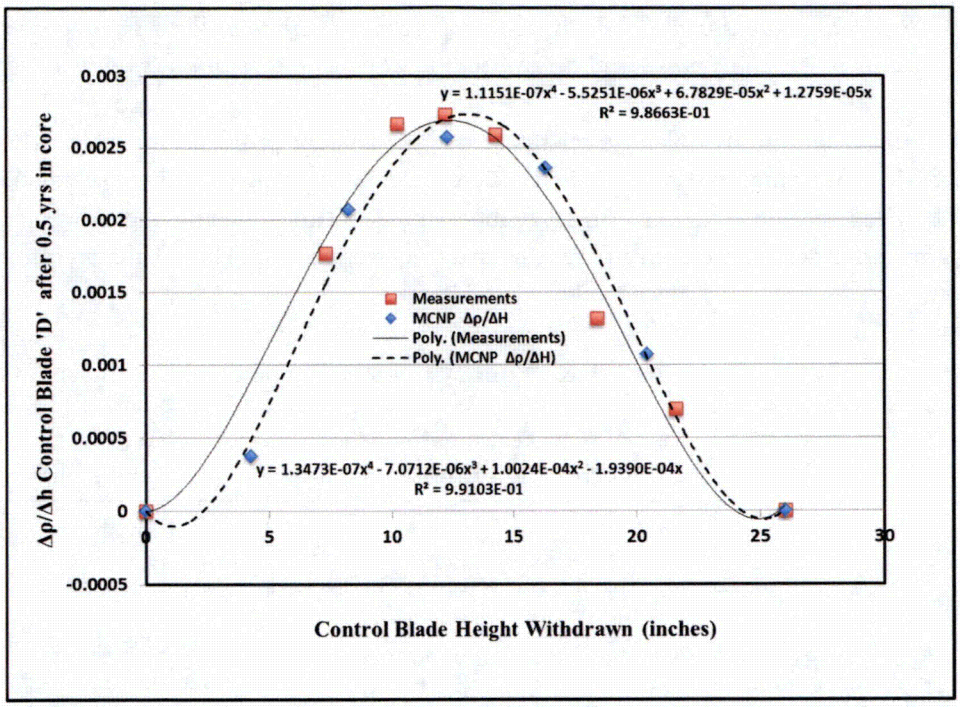

Figure 9 – Comparison of Measured and Calculated Differential Worth Curves for Shim Control Blade 'D'

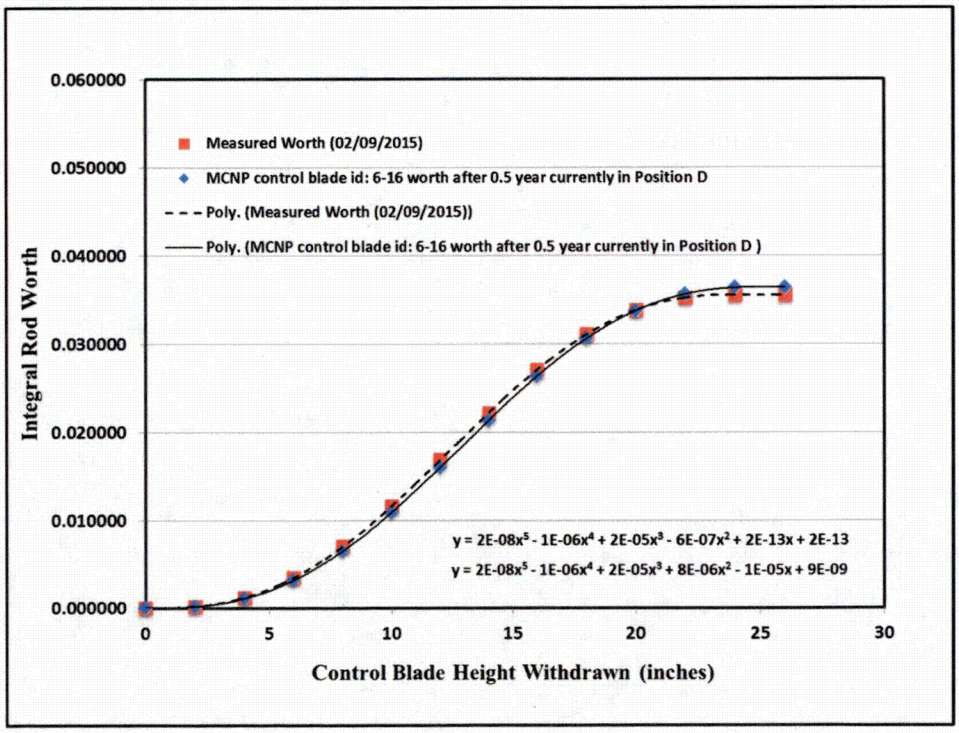

Figure 10 – Comparison of Measured and Calculated Integral Worth Curves for Shim Control Blade 'D'

d. *Provide a calculated and measured temperature coefficient for a given core configuration at a low power, no xenon condition, or justify why this information is not needed.*

The primary and pool coolant temperature coefficients are provided in Table 4-12 (Page 4-42) of the SAR. But since those coefficients were calculated using the older set of neutronics codes, MURR has recalculated the primary temperature coefficient using the newer sets of computer programs that were described in the response to Question 3.a. The results are provided in Table 2 below.

Table 2 – MURR Primary Coolant Temperature Coefficient

Coefficient	**MURR Technical Specification Limit**	**ANL-MCNP Calculation** (294 to 400 K)
Primary Coolant Temperature (Isothermal)	Average Core Temperature Coefficient Shall be More Negative Than: -6.0×10^{-5} $\Delta k/k/^{\circ}F$	All Fresh Core, BOC: $-13.2 \times 10^{-5} \pm 2.3 \times 10^{-7}$ $\Delta k/k/^{\circ}F$ Mixed Core, BOC: $-12.8 \times 10^{-5} \pm 2.2 \times 10^{-7}$ $\Delta k/k/^{\circ}F$ Mixed Core, Eq. Xe: $-11.8 \times 10^{-5} \pm 2.2 \times 10^{-7}$ $\Delta k/k/^{\circ}F$ Mixed Core, BOC (ENDF7): $-12.5 \times 10^{-5} \pm 2.2 \times 10^{-7}$ $\Delta k/k/^{\circ}F$

Note: BOC = Beginning of Cycle.

4. *NUREG-1537, Section 4.5.3, "Operating Limits," provides guidance that licensees demonstrate that their facility has sufficient control blade worth to achieve the required shutdown reactivity assuming that all scrammable control blades are released upon scram, but the most reactive blade remains in its most reactive position. The NRC staff could not find this information in the MURR SAR, but noted a reference in the 1971 Low Power Testing Program that indicated that the shutdown margin control blade reactivity was determined using 66 percent of the 4 shim blade insertion worth. Explain how MURR ensures adequate SDM, whether and if so, how the 66 percent factor from the 1971 Low Power Testing Program is used, or justify why this information is not needed.*

Table 4-12, on Pages 4-41 and 4-42 of the SAR, contains the value for the reactor core shutdown margin. The Table lists the maximum K_{eff} with the highest worth shim control blade fully withdrawn, or stuck, as 0.938. This maximum K_{eff} value translates to a minimum reactor shutdown margin value of -0.066 $\Delta k/k$. This compares with the Technical Specification minimum reactor core shutdown margin requirement of -0.02 $\Delta k/k$.

Referring to the response to Question 1.a provided earlier, the reactor core shutdown margin value, calculated using the newer suite of reactor physics programs in use at MURR as described in the response to Question 3.a, is -0.0875 $\Delta k/k$ for an all-fresh fuel core case [Note: license possession limit only allows six (6) fresh fuel elements onsite].

5. *NUREG-1537, Section 11.1.1.1, "Airborne Radiation Sources," provides guidance for the licensee to characterize the dose for the maximally exposed individual, at the location of the nearest permanent residence, and at any locations of special interest in the unrestricted area.*

   a. *The MURR SAR, Appendix B, contains summary information regarding the radiological impacts of the MURR generated release of Argon 41 (Ar-41) during normal operations. The MURR methodology includes an equation on SAR page B-10 that is used to alter the effective stack height used in the dose calculations to compensate for elevation changes of the receptor due to the local topography. Although unreferenced in the SAR, the NRC staff reviewed "Plume Rise" by Briggs (TID-25075) and it seems that this equation is based on the Davidson empirical model which has limited supporting data. Describe how the effective stack height calculations are performed for the unique topography surrounding MURR, and how the results are sufficiently conservative for the estimation of dose, or justify why no additional information is needed.*

MURR calculates effective stack height, for the purposes of determining dose from radionuclide emissions, as the difference in vertical elevation between the point of emission at the end of the MURR exhaust stack and the receptor height at the point of interest, plus the effective stack height calculated using the Davidson equation. This equation takes into account the stack diameter and exhaust velocity of the gases leaving MURR to calculate an injection height and thus an effective stack height into the atmosphere. Wind speed is also an input parameter into this formula as it is a function of the particular Pasquill atmospheric stability class that is being modeled for the general wind direction that is being used to calculate the offsite dose; thus it is included in the equation. While G.A. Briggs notes on page 23 of his book "Plume Rise"[1] that the Davidson formula "…often greatly underestimates observed rises,…" this underestimation would cause the offsite dose calculations using the Pasquill-Guifford model to overestimate doses to the individual at the point of dose calculation interest. In fact, dose estimates generated using this model are not out of line with doses calculated using the COMPLY[2] computer code which is used to determine annual doses (demonstrate compliance) to the nearest resident from MURR as part of the facility's annual National Emission Standards for Hazardous Air Pollutants (NESHAPS) compliance report. Additionally, using Briggs' own equations for calculation of effective stack heights from the same reference book "Plume Rise," confirms that while the Davidson model underestimates effective stack heights, these underestimated effective stack heights lead to an overestimation of dose, thus providing a conservative approach to the offsite dose calculations. Thus, we feel that no additional information is required.

References:

[1]Briggs, G.A., *Plume Rise*, AEC Critical Review Series, U.S. Atomic Energy Commission, Division of Technical Information, 1969.

[2]COMLY is a computerized screening tool for evaluating radiation exposure from atmospheric releases of radionuclides. May be used for demonstrating compliance with some EPA and U.S. Nuclear Regulatory Commission regulations, including NESHAPS in 40 CFR 61, Subpart H and Subpart I.

b. *SAR page B-11 has an equation for X/Q that includes the σy and σz dispersion factors. The NRC staff was unable to validate some of the dispersion values used in Tables B-2 and B-3. Explain how these values were determined or justify why no additional information is needed.*

Tables B-2 and B-3 in SAR Appendix B contained some incorrect values for both the horizontal (σ_Y) and vertical (σ_Z) dispersion coefficients. These values have been reviewed and updated and are now included in the corrected Tables B-2 and B-3 below.

TABLE B-2
MAXIMUM ANNUAL INDIVIDUAL DOSE AT 150 METERS

Location: 150 Meters Directly North Elevation at Man Height: 636 Feet (194 Meters)							
Class	Eff. Height (m)	σ_Y (m)	σ_Z (m)	χ/Q (sec/m^3)	χ (μCi/ml or Ci/m^3)	%s Comb.	Dose with %s (mrem/y)
A	35	33	23	6.27E-05	3.14E-09	2.40E-04	0.00
B	27	23	15	6.09E-05	3.04E-09	5.10E-03	0.08
C	23	17	11	4.55E-05	2.28E-09	1.70E-02	0.19
D	20	12	7	1.14E-05	5.71E-10	6.30E-02	0.18
E	23	8.5	5	4.76E-08	2.38E-12	3.10E-02	0.00
F	30	6	3.2	5.24E-22	2.62E-26	1.50E-02	0.00
Total							0.46

TABLE B-3
MAXIMUM ANNUAL INDIVIDUAL DOSE AT 760 METERS

Location: 760 Meters Directly North Elevation at Man Height: 700 Feet (213 Meters)							
Class	Eff. Height (m)	σ_Y (m)	σ_Z (m)	χ/Q (sec/m^3)	χ (μCi/ml or Ci/m^3)	%s Comb.	Dose with %s (mrem/y)
A	16	170	270	3.30E-06	1.65E-10	2.40E-04	0.00
B	8	120	85	1.04E-05	5.18E-10	5.10E-03	0.01
C	4	85	52	1.71E-05	8.55E-10	1.70E-02	0.07
D	1	55	26	3.97E-05	1.99E-09	6.30E-02	0.63
E	4	42	18	1.03E-04	5.13E-09	3.10E-02	0.80
F	11	30	12	2.23E-04	1.12E-08	1.50E-02	0.84
Total							2.35

Note: The "%s Comb." column was added to Tables B-2 and B-3 to better aid in understanding the calculation of total dose based on the Pasquill-Guifford stability classes and wind direction.

6. *NUREG-1537, Section 13, provides guidance that the applicant should demonstrate that the facility design features, safety limits, limiting safety system settings, and limiting conditions for operation have been selected to ensure that no credible accident could lead to unacceptable radiological consequences to people or the environment. The NRC staff review examined the analyses provided in the MURR SAR, Chapter 13, including the assumptions regarding the initial conditions (e.g., reactor power, reactivity insertion, etc.), analytical input (e.g., peaking factors and decay times), and results. The following information is needed:*

   a. *Regarding Insertion of Excess Reactivity - The initial power is 10 MW rather than the Limiting Safety System Setting setpoint in TS 2.2 (12.5 MW). The temperature feedback coefficient used is -7.0×10^{-5} $\Delta k/k$ rather than the TS 5.3.a value of -6×10^{-5} $\Delta k/k$. It is unclear what peaking factors are employed. SAR Figure 13.2 seems to indicate that the scram time used is faster than the value in TS 3.2.c. The acceptability of the results is based upon whether the power for burnout is achieved rather than the safety limit identified in TS 2.1. Provide additional information justifying and supporting the analysis and the safety conclusions or provide a justification for why such information is not required.*

For the Insertion of Excess Reactivity accident analysis, the licensed maximum power level of 10 MW was used in the SAR as the starting assumption since MURR does not, nor can it legally, operate above this power level. On Page 13-9 of NUREG-1537, Part 2, *Standard Review Plan and Acceptance Criteria*, for the Insertion of Excess Reactivity accident, "*The accident scenario assumes that the reactor has a maximum load of fuel (consistent with the technical specifications), the reactor is operating at full licensed power, and the control system...*" The accident was reanalyzed at a much more conservative starting power level (11.5 MW) than required by NUREG-1537 and the results are provided below. 11.5 MW was chosen, instead of the Limiting Safety System Setting (LSSS) set point of 12.5 MW, since the rod run-in system will initiate a rod run-in at 11.5 MW (Technical Specification 3.2.f.1) and shutdown the reactor prior to reaching the LSSS scram set point of 125%.

For the SAR analysis of the Insertion of Excess Reactivity accident, the temperature coefficient used was -6.0×10^{-5} $\Delta k/k$ and not -7.0×10^{-5} $\Delta k/k$ as stated above. Third paragraph on Page 13-17 of the SAR lists the various reactivity coefficients assumed for the Insertion of Excess Reactivity accident analysis.

Details regarding the power peaking factors used were not provided in that section of the SAR. The power peaking values used were values obtained based on the destructive analysis of a MURR fuel element. For the updated analysis, more up-to-date power peaking values, based on the detailed MCNP MURR core model, were used.

For both the SAR analyses, as well as for the updated analysis presented here, the control blade insertion times are based on the current and relicensing Technical Specification 3.2.c requirement of insertion to the 20% withdrawn position in less than 0.7 seconds. So the insertion rate was calculated based on shim control blades travelling from 26 inches (fully withdrawn) to 5.2 inches (20% withdrawn or 80% inserted) in 0.7 seconds. This is a conservative assumption since monthly

control blade drop time verifications performed at MURR have always yielded insertion times of 0.6 seconds or less (see response to RAI 1.a).

Similar to the SAR analysis, the Reactivity Transient Analysis program PARET (V7.5), maintained and distributed by the Nuclear Engineering Division of Argonne National Laboratory (ANL) was used. For the Insertion of Excess Reactivity accident analysis, two channels were modeled in PARET; a hot channel representing worst-case conditions inside the core and an average channel representing the rest of the core experiencing "average" conditions. The axial power profiles used for this 2-channel PARET reactivity transient analysis are given in Table 1 below.

Table 1 – Peaking Factors in the Hot and Average Channels

Hot Channel	Average Channel
2.046	1.058
1.971	0.920
2.145	1.018
2.335	1.132
2.497	1.219
2.672	1.307
2.835	1.360
2.986	1.411
3.105	1.430
3.164	1.437
3.169	1.420
3.098	1.383
2.953	1.326
2.775	1.243
2.542	1.140
2.290	0.989
2.069	0.828
1.888	0.701
1.703	0.615
1.499	0.530
1.277	0.460
1.080	0.386
0.904	0.329
0.880	0.358

As indicated earlier, the transient was started from an initial power level of 11.5 MW with core coolant flow rate as well as core coolant inlet temperatures set at their LSSS values of 3,200 gpm

and 155 °F, respectively. Also, pressurizer pressure was at 75 psia (LSSS value). Since the Insertion of Excess Reactivity transient was analyzed from a starting power level of 11.5 MW, the rod run-in that would be initiated by the rod run-in system at 11.5 MW was bypassed and only the high power scram set point of 12.5 MW was modeled. Also, a delay of 150 milliseconds was incorporated into the control blade scram model so that the control blades would only start to insert 0.15 seconds after the power level had exceeded the scram set point of 12.5 MW.

The results of a step reactivity insertion of 600 pcm (+0.006 Δk/k) are shown below in Figure 1. As expected, due to the higher starting core power level, much lower core coolant flow rate and much higher than normal core coolant inlet temperature conditions assumed for this updated analysis, the peak power during the transient momentarily reaches approximately 37.4 MW compared to a value of approximately 33.0 MW reported in the SAR analysis for the same 600 pcm step reactivity insertion.

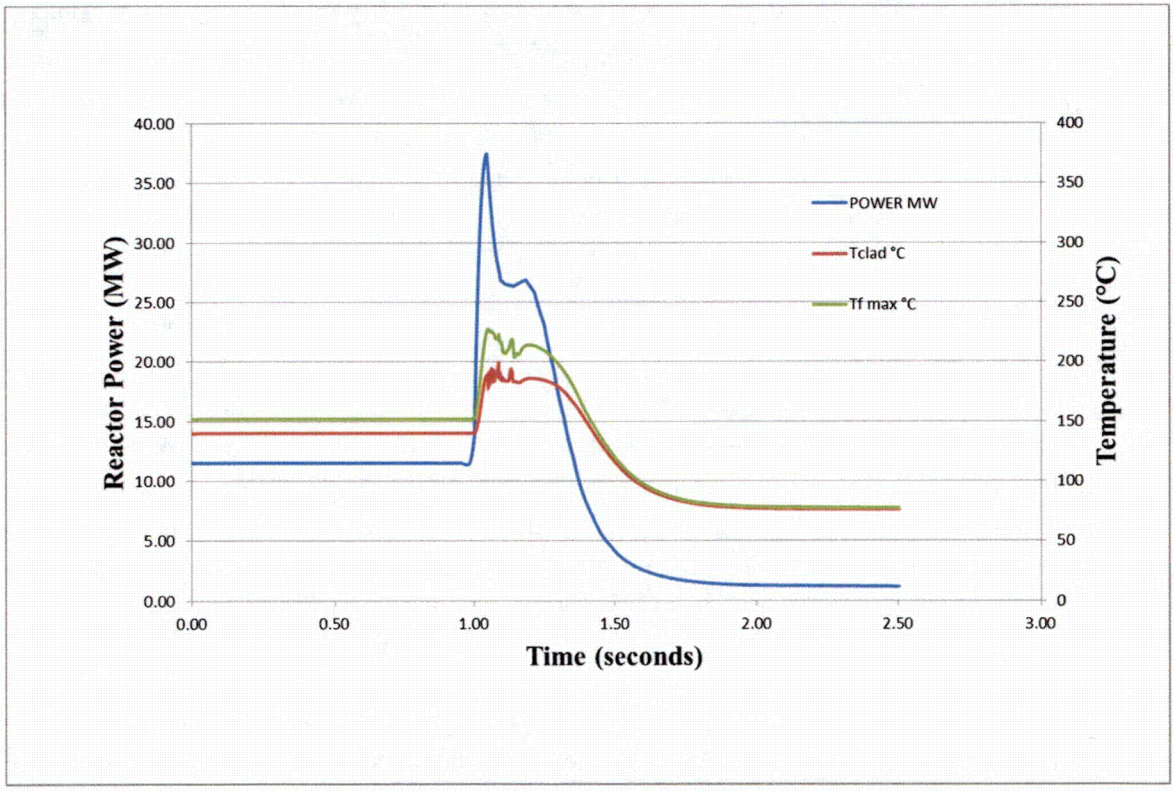

Figure 1 – Reactor Power, Fuel and Cladding Temperatures vs. Time
for a Positive Reactivity Step Insertion of 0.006 Δk/k

Several SPERT tests had shown that the reactor can withstand such short duration (few milliseconds) power burst without sustaining any fuel damage and only sustained operation at such high power levels will lead to fuel damage. The peak fuel temperature reached during the Insertion of Excess Reactivity accident in the worst (Hot) channel is only 227.4 °C – well below the new Safety Limit of 530 °C for the aluminide fuel.

b. *Regarding Loss of Primary Coolant and Loss of Primary Coolant Flow - The initial power is 11 MW rather than the LSSS setpoint in TS 2.2 (12.5 MW). It is unclear what peaking factors are employed. The acceptability of the results is based upon the peak fuel temperature attained rather than the safety limit identified in TS 2.1. Provide additional information justifying and supporting the analysis and the safety conclusions or provide a justification for why such information is not required.*

The Loss of Coolant Accident (LOCA) and the Loss of Flow Accident (LOFA) are thermo-hydraulic transient accidents based on a departure from long-term, steady-state, full power operation. MURR does not, nor can it legally, operate above its licensed power level of 10 MW, but assumed 11 MW to add an additional 10% higher steady-state operating heat flux and total decay heat factor.

As stated on page 13-7 of NUREG-1537, Part 1, *Format and Content*, item 13.2(1), "*State the initial conditions of the reactor and equipment. Discuss relevant conditions depending on fuel burnup, experiments installed, core configurations, or other variables. Use the most limiting conditions in the analyses.*" On Pages 13-9 and 13-10 of NUREG-1537, Part 2, *Standard Review Plan and Acceptance Criteria*, for both the LOCA and LOFA, "*The scenario assumes that the reactor is operating at full licensed power and has been operating long enough for the fuel to contain fission products at equilibrium concentrations.*" Therefore, we believe, the assumed 11 MW steady-state power level was greater than the required assumed power level as stated in NUREG-1537, Part 2.

The assumed peaking factors are graphed on Figure C.6 (Page C-13) and listed in Table C-1 (Page C-14) of Appendix C of the SAR. The cold-leg break LOCA has the highest peak fuel temperature of 311.7 °F (155.4 °C) occurring in fuel plate number-3 within the first second. The hot-leg break LOCA peak fuel temperature is 281.2 °F (138.4 °C) also occurring within the first second. These peak temperatures occur within the first second because the events start with a loss of normal forced circulation coolant flow with a slight delay in the reactor scram trip. The peak fuel temperature for a LOFA is 280.3 °F (137.9 °C), which occurs in fuel plate number-1, 0.3 seconds into the transient.

The LOFA and LOCA analyses were redone with the other three (3) Limiting Safety System Setting (LSSS) variables – core coolant inlet temperature, core coolant flow rate and pressurizer pressure – at their respective set points of 155 °F, 3,200 gpm and 75 psia. The peaking factors used in the updated analyses are the ones described in the response to RAI 7.a (By letter dated July 8, 2013, the NRC issued Amendment No. 36 to Facility Operating License No. R-103, which revised the MURR Safety Limits). The peak fuel temperature for the cold-leg break LOCA was 413.9 °F (212.2 °C) whereas the peak fuel temperature for the LOFA was 292.3 °F (144.6 °C). Well below the new Safety Limit peak fuel temperature of 530 °C.

MURR feels that having core coolant inlet temperature, core coolant flow rate and pressurizer pressure are their respective LSSS and reactor power at the full licensed limit meets the guidance of NUREG-1537, Parts 1 and 2, and is sufficiently conservative.

c. *Regarding the maximum hypothetical accident (MHA) and Failed Fueled Experiment - these events use a 10 minute and 2 minute evacuation time respectively. Provide additional information identifying the limiting evacuation time and then use that time to justify and support the analysis and the safety conclusions or provide a justification for why such information is not required.*

The basis for the maximum hypothetical accident (MHA) evacuation time is stated on Page 13-5 of the SAR: "It would take approximately 5 minutes for Operations personnel to secure the primary coolant system (PCS) and verify that the containment building has been evacuated following a containment building isolation. For the purpose of the MHA calculations, a conservative assumption of 10 minutes is used." This basis will not change; however, the MHA has now been renamed the "Fuel Failure during Reactor Operation" accident since the dose consequences of a failed fueled experiment are the most severe of all of the radiological accident scenarios.

However, for a failed fueled experiment (now the MHA) or a fuel handling accident (FHA), the primary coolant system (PCS) does not have to be secured. The only required action for Operations personnel is to verify that the containment building has been evacuated following a containment building isolation, which will occur during both of these accidents. MURR performs an evacuation drill every year and the typical time period for all personal to evacuate the containment building, including verification by Operations personnel, is two (2) to two and a half (2.5) minutes. For the purposes of the failed fueled experiment and FHA calculations, a conservative assumption of five (5) minutes is used for both accident scenarios.

7. *NUREG-1537, Section 13.1.1, "Maximum Hypothetical Accident," provides guidance for the licensee to postulate a failed fuel element scenario and analyze the consequences. The MURR SAR, Section 13.2.1.2, provides the analysis and related consequences for a fuel failure involving the melting of four number 1 fuel plates in a core region where the power is at a maximum. The fuel fails submerged and it is assumed that all iodine, krypton, and xenon isotopes are released into the primary coolant system (PCS) while in Modes I or II (PCS closed).*

   a. *The iodine and noble gases core inventories are based on a 1200 MWD burnup consisting of twelve 10-day cycles over a 300-day period. These values were then adjusted using a peaking factor of 1.6. However, in the response to RAI A.27 (ADAMS Accession No. ML120050315), a peaking factor of 3.0 has been used. In the MURR SAR, Section 4.5, the peaking factor is listed as 3.676. Clarify the discrepancies in the peaking factors used, and provide a revised calculation of the source using the peaking factors determined from the final analysis, or justify why no additional information is needed.*

Table 4-14, "SUMMARY OF MURR HOT CHANNEL FACTORS," in Section 4.5 of the MURR SAR, lists a hot spot power peaking factor of 3.6765 with no engineering factors included. This value applies the product of the radial, axial and azimuthal peaking factors of a fuel plate to determine the hot spot on the plate. The SAR provides an overall peaking factor of 4.35; the hot spot power peaking factor of 3.6765 multiplied by the engineering factors. These two peaking factor values apply to the potential worst-case maximum power density point in the core for the Safety Limits (SL) when the SAR was submitted in August 2006.

From Table 4-14, "SUMMARY OF MURR HOT CHANNEL FACTORS," of the MURR SAR:

On Heat Flux	
Power-related Factors	
Nuclear Peaking Factors	
Radial	2.220
Non-Uniform Burnup	1.112
Local (Circumferential)	1.040
Axial	1.432
Overall	3.676
Engineering Hot Channels Factors on Flux	
Fuel Content Variation	1.030
Fuel Thickness / Width Variation	1.150
Overall Product	4.35

By letter dated July 8, 2013, the NRC issued Amendment No. 36 to Facility Operating License No. R-103, which revised the MURR SLs. The revised SLs reduced the overall nuclear peaking factor to 3.4747; with no engineering factors included. Including the engineering factors, the overall peaking factor increases to 4.116.

From Table F.4, "SUMMARY OF MURR HOT CHANNEL FACTORS," of Appendix F of Addendum 4 to the MURR Hazards Summary Report (as revised by Amendment No. 36):

On Heat Flux From Plate-1	
Power-related Factors	
Nuclear Peaking Factors	
Fuel Plate (Hot Plate Average)	2.215
Azimuthal Within Plate	1.070
Axial Peak	1.3805
Additional Allowable Factor	1.062
Overall	3.4747
Engineering Hot Channels Factors on Flux	
Fuel Content Variation	1.030
Fuel Thickness / Width Variation	1.150
Overall Product:	4.116

This peak heat flux point is at axial mess interval 14 (13 to 14 inches down the fuel plate meat) where the enthalpy rise at that interval is 52.3%. The SL is based on mess interval 18, which has an overall peaking factor of 3.863 and an enthalpy rise of 74.8%; thus producing the most limiting combination of heat flux and enthalpy rise.

This overall peaking factor of 4.116 at mesh interval 14 would apply to the 1-inch square assumed in the analysis in the response to RAI A.27. Therefore, since the ratio is 1.372 (4.116 / 3.0), the calculated dose rates in the response to RAI A.27 increased by approximately the 37.2%. The only other fuel plate exposed during handling is plate number-24, which has a lower overall peaking factor than plate number-1. The assumed peaking factor in the response to RAI A.27 has been revised from 3.0 to 4.116, which increased the whole body (TEDE) "60-Minute Dose from Radioiodine and Noble Gases in Containment" from 0.79 to 1.09 mrem. This change also required a similar revision to the response to RAI A.6 regarding the revised Technical Specification definition for Irradiated Fuel, Definition 1.11, by about the same percentage.

The current MURR maximum hypothetical accident (MHA) assumes the melting of fuel plate number-1 in four (4) different fuel elements. An unirradiated fuel plate number-1 contains, on average, 19.26 grams of U-235, so four (4) unirradiated number-1 fuel plates contain 77.04 grams instead of the 78.58 grams assumed in the MHA. These four (4) number-1 fuel plates that melt correspond to 1.41% of the total U-235 in the Week 58 Core that was used to determine the high power peaking factor for the revised SLs. The Week 58 Core has a total power history of 576 MWd. This power history results in a total reduced core mass of 5,474 grams of U-235 due to the previous fuel consumption. This 1.41% of U-235 melting releases 3.42% of the core fission products due to the highest power density fuel plate number-1 overall peaking factor of 2.423, which is conservatively assumed to apply to all four number-1 fuel plates (1.41% x 2.423 = 3.42%).

Following the response to RAI 7.g below is the revised MHA, which will now be referred to as "Fuel Failure during Reactor Operation" since the dose consequences for an individual in the containment building are less than that for a failed fueled experiment, which is now considered the MURR MHA.

b. *The release is assumed to occur into the PCS with a volume of 2,000 gallons. Identify what components comprise this volume and provide information to confirm the 2,000 gallon volume assumption, or justify why no additional information is needed.*

The 2,000 gallon total volume of the primary coolant system (PCS) is based on the volume of all of its individual, major components, including the piping, reactor core, pressure vessels, primary coolant circulation pumps, heat exchangers, and pressurizer. Attachment 7 is a breakdown of the measurements and calculated volumes, where design capacities are not available, of the individual components following the RELAP Model component designations listed in Appendix C of the SAR. The total calculated volume of the PCS is 2,007 gallons. However, based on the difficulty of measuring some of the in-pool PCS piping and components, this volume is conservatively underestimated by approximately 5 to 10%, thus radionuclide concentrations in the PCS are conservative.

c. *The release is assumed to remain in the PCS except for the amount that will enter the pool cooling system as part of the PCS to pool cooling system leakage. Therefore, the concentration of iodine that is released first enters the pool cooling system and is diluted once again. This seems to reduce the consequences of this accident to a fraction of the consequences of the failed fueled experiment as provided in your response to RAI 13.9 (ADAMS Accession No. ML103060018). As such, this event (four failed fuel plates) may not be the MHA. Provide a confirmation of the dilution assumptions stated above and clarification as to the MHA for MURR.*

In response to these RAIs, all three (3) radiological accidents – Maximum Hypothetical Accident (MHA), Fuel Handling Accident (FHA), and Fueled Experiment Failure – have been reanalyzed using consistent methodologies and assumptions. All three (3) new analyses are included in these responses. The following are the radiological accident scenarios and the whole body exposures (TEDE) to an individual in the containment building associated with them:

Maximum Hypothetical Accident:	**42.18 mrem**
Fuel Handling Accident:	**687.00 mrem**
Fueled Experiment Failure:	**1212.44 mrem**

Based on these analyses, the Fueled Experiment Failure accident has been determined to be the new MURR MHA. The current MHA will be renamed "Fuel Failure during Reactor Operation."

d. *The released concentrations in the containment are based on the 10-minute leakage between the PCS and the pool cooling system. However, the NRC staff questions whether the release*

into the PCS will collect in the vent tanks and other places in the PCS and eventually be released to the environment after decay. Provide an explanation for this leakage path, including assumptions and calculations of the possibility of the isotopic concentrations being released to the environment, or justify why no additional information is needed.

As stated on Page 13-3 of the SAR, a reactor scram and actuation of the containment building isolation system will occur as a result of the gaseous activity collecting in the vent tank system. At this point the containment building is isolated. As described in Section 9.13.3 of the SAR, the vent tanks will vent through an absolute and charcoal filter if enough gases collect in the vent tanks to cause the water level in the tanks to recede to a point where level controller 925A will signal valve V552A to open and vent the gases. Note: The vent path for the vent tank system, after it goes through the absolute and charcoal filters, is to the pool sweep system which is connected to the containment building 16-inch hot exhaust line (see SAR Sections 6.2.3.8 and 9.1.2.2). The containment building 16-inch hot exhaust line contains two (2) quick-closing isolation valves, designated 16A and 16B. During a containment building isolation, both of these valves will close.

The volume of gases that are released from four (4) number-1 fuel plates is insignificant and would not cause the system to vent. However, if for some reason the system should vent prior to the PCS being secured as part of the actions of Operations personnel during an MHA (vent valves 552A and 552B will not open when the PCS is secured), the gases will be vented into the isolated containment structure and not to the environment. Any determination to enter the containment building and un-isolate the structure and vent any potential gases after the accident will be part of long-term recovery actions, which will be very well planned and organized.

e. *In determining the offsite doses in the unrestricted areas from the releases, the concentrations of the released isotopes are calculated using a method described in the MURR SAR, Appendix B, which used a simplified joint frequency distribution of weather data that was prepared in the 1960s. Given the changes in weather conditions over the last 50 years, it is not clear to the NRC staff whether the listed probabilities and wind speeds for the stability classes are still applicable. Provide available current weather data, and state whether changes warrant reconsideration of the cited data, or justify why no additional information is needed.*

In reviewing the available meteorological data for the Columbia vicinity, newer meteorological data was found from the Columbia Regional Airport. This facility has more current meteorological wind data available and this data was used to generate wind roses for updated time periods closer to the current time frame. Based on the results of the meteorological data review, we believe that the previous data submitted is representative of current wind rose data, in and around the Columbia area, as there appeared to be no substantial difference in wind speed and direction during the original submittal utilizing nine (9) years of data from 1961 to 1969 and subsequent data which included the above 9-year period and an additional 21 years of meteorological data for a total of 30 years (1961 to 1990). Attachment 8 provides the meteorological data for the years 1961 to 1969. Attachment 9 provides the meteorological data for the years 1970 to 1990, while Attachment 10 provides the meteorological data for the years 1961 to 1990.

f. *It is not clear to the NRC staff which dispersion factors were used to arrive at the listed concentrations in the cited unrestricted location, which is also not specified. The calculation of the ratio of the average concentration in the unrestricted location to the corresponding concentration in containment results in the reduction factor for iodine twice as large as the value for the noble gases. For example, for Krypton-85 the ratio is $7.5\times10^{-14}/3.0\times10^{-8}$ or a reduction of about 4.0×10^{5}. For I-131, the ratio is $1.36\times10^{-14}/1.1\times10^{-8}$ or a reduction of about 8.1×10^{4}. Provide an explanation of all assumptions relating to the calculation of average isotope concentrations, specify all locations where these concentrations are determined, and explain how dispersion factors are determined and used, or justify why no additional information is needed.*

In the case of I-131 as noted above the ratio of I-131 is 1.24×10^{-06}. This was determined by taking the initial concentration of I-131 in the containment building of 4.4×10^{-08} μCi/ml (Page 13.6 of the SAR) and multiplying it by 0.25 (plating reduction factor) and dividing into the final offsite concentration of 1.36×10^{-14} μCi/ml. In the case of Kr-85, the ratio is the same, (7.5×10^{-14} / 6.06×10^{-08}) = 1.24×10^{-06}. The initial concentration of Kr-85 was used in this case as there is no plating or other phenomena that would hold up the noble gases.

g. *In determining occupational doses, it appears that the MURR SAR calculations use a combination of dose conversion factors (DCFs). It appears that for radioiodine, the calculation uses DCFs from Federal Guidance Report (FGR) No. 11 for inhalation pathway (thyroid) and FGR No. 12 for submersion dose (external-deep-dose), whereas for submersion doses from noble gases, it uses the derived air concentrations from 10 CFR Part 20, Appendix B, Table 1. FGR 12 revises the dose coefficients for air submersion used in FGR 11. Those DAC values are based on International Commission on Radiation Protection (ICRP)-2 DCFs, whereas the FGR 11 values are based on ICRP-38. In addition, neither FGR 11 nor FGR 12 lists DCFs for isotopes with very short-half lives. In 10 CFR Part 20, Appendix B Table 1, the regulation provides a DAC value of 1×10^{-7} micro-Ci/ml for those isotopes with a half-life of less than 2 hours. Overall, the differences in the calculated DCFs result in high values of calculated doses from noble gas isotopes with a very short half-life. Provide dose calculations using uniform data and methodology.*

MURR has revised all applicable dose calculations for both occupational and public doses to use limits from either: 10 CFR 20, Appendix B or 10 CFR 835, Appendix C (Attachment 11). Where available we use Derived Air Concentration (DAC) and Effluent Concentrations from 10 CFR 20 Appendix B. The U.S. Department of Energy (DOE) publishes Appendix C (Air Immersion DAC) specifically for isotopes whose principle exposure pathway is via immersion. For the four short-lived noble gases ($T_{1/2}$ < 2 hours) that we analyzed in the included accident analyses, MURR used the 10 CFR 835 Appendix C default DAC value of 6.0×10^{-06} μCi/ml as noted at the end of Appendix C. From this default DAC we estimate the applicable effluent concentration limit based on the description provided in the Table 2, "Effluent Concentrations," footnotes to Appendix B in 10 CFR 20. Thus, all dose calculations now use limits based on the background and methodology provided in ICRP 26 and 30.

***Revised* "Fuel Failure during Reactor Operation"**
(Formerly the MHA)

13.2.1 Fuel Failure during Reactor Operation

13.2.1.1 Accident-Initiating Events and Scenarios

Many types of accidents have been considered in conjunction with the operation of the MURR. In all cases, safety systems have been designed such that the likelihood of an accident involving the release of a significant amount of fission products has essentially been eliminated. The safety systems take the form of automatic reactor shutdown circuits and process systems designed to ensure, through redundancy, that the reactor will shut down upon a significant deviation from normal operating conditions. In addition, the reactor is housed within a containment building, thus providing further protection against a significant release of radioactive material to the environment.

In the "Fuel Failure during Reactor Operation" accident for the MURR, it is assumed that an accident condition has caused the melting of the number-1 fuel plate in four (4) separate fuel elements (Ref. 13.11). It is further assumed that the four (4) number-1 fuel plates are in the peak power region of the core.

While one might postulate that this accident could result from a partial flow blockage to the fuel, mitigating features such as the primary coolant system strainer, the fuel element end-fittings, and the pre-operational inspection of the reactor pressure vessels and core region following any fuel handling evolution, all prevent an accident of this type from occurring. In addition, it has been shown that a 75% blockage of coolant flow to the hot channel is insufficient to cause cladding failure (Ref. 13.2).

13.2.1.2 Accident Analysis and Consequences

The fuel failure accident postulates partial fuel melting with an associated release of fission products into the primary coolant system. The accident is assumed to occur with the primary coolant system operating, resulting in a quick dispersal of the fission products throughout the system. With the design of the primary coolant system and its associated systems, particulate activity will remain in the coolant, and the gaseous activity that comes out of solution will collect in the reactor loop vent system and be retained there. Therefore, the primary coolant system relief valves and pressurizer are the only paths for a release of significant quantities of fission products to the environment.

The potential energy release from the melting of four (4) number-1 fuel plates could occur as a possible metal-water reaction (Ref. 13.3). While hydrogen would be formed, it is highly unlikely that in a water environment a hydrogen deflagration reaction would occur. The amount of material which would be involved in a metal-water reaction under the conditions of four (4) number-1 fuel plates melting is not predictable as the amount is dependent upon many conditions. For purposes of calculation, it is conservatively assumed that all the fuel plate aluminum cladding exposed in the

area is involved in the reaction. The reactor core contains a total of 33.56 Kg of aluminum. Of this, 1.3% or 436 grams is assumed to react according to the following equation:

$$Al + nH_2O \rightarrow AlO_n + nH_2 + \text{heat}.$$

The energy release per Kg of aluminum is 18 MW-sec, for a total energy release of:

$$7.9 \text{ MW-sec} = 7.5 \times 10^3 \text{ BTU}.$$

This amount of heat would easily be transferred to the adjacent fuel elements and primary coolant in the core. Additionally, any steam that would form in the vicinity of the molten area would also assist in dissipating the heat. Since the fuel failure would result in a negligible release of energy to the primary coolant system, the introduction of pressure surges, which could lift the primary relief valves, are not considered credible. The pressurizer is an isolated system, and since no significant pressure surges are anticipated, it will not be subject to mixing with the primary coolant system.

Any significant gaseous radioactivity entrapped in the reactor loop vent tank will cause a reactor scram and actuation of the containment building isolation system by action of the pool surface radiation monitor. Additionally, following actuation of the anti-siphon system when the primary coolant system is secured, gases could also collect in the anti-siphon pressure tank. The location of these tanks under the pool surface, and the shielding provided by the water and the biological shield, will significantly reduce any radiation exposure to the reactor staff, visitors, or researchers.

Fission products entrapped in the primary coolant system can be removed by the reactor coolant cleanup system. This cleanup procedure would be undertaken under closely monitored and controlled conditions.

The primary coolant system does experience some coolant leakage into the reactor pool through the pressure vessel head packing and flange gasket. This leakage is typically less than 40 gallons (151 l) per week; an almost imperceptible leakage rate of approximately 4×10^{-3} gallons of primary coolant per minute into the pool. However, for purposes of calculation, a leakage rate of 80 gallons (303 l) per week is used. Based on this assumed conservative leakage rate, the radiation exposure to personnel in the containment building following the fuel failure is calculated below.

For operation at 10 MW for 1,200 MWD in twelve 10-day cycles over a 300-day period with 6.2 Kg of ^{235}U (normal operating cycle is 6.5 days with a total of less than 700 MWD on the core), the following radioiodine, krypton and xenon activities will conservatively be present in the core (Ref. 13.39).

Radioiodine and Noble Gas Activities in the Core

^{131}I – $1.7 \times 10^{+05}$ Ci	^{85}Kr – $4.7 \times 10^{+02}$ Ci	^{133}Xe – $4.2 \times 10^{+05}$ Ci
^{132}I – $3.3 \times 10^{+05}$ Ci	^{85m}Kr – $1.1 \times 10^{+05}$ Ci	^{135}Xe – $9.6 \times 10^{+04}$ Ci
^{133}I – $5.1 \times 10^{+05}$ Ci	^{87}Kr – $2.1 \times 10^{+05}$ Ci	^{135m}Xe – $9.4 \times 10^{+04}$ Ci
^{134}I – $6.3 \times 10^{+05}$ Ci	^{88}Kr – $3.0 \times 10^{+05}$ Ci	^{137}Xe – $4.9 \times 10^{+05}$ Ci
^{135}I – $5.2 \times 10^{+05}$ Ci	^{89}Kr – $3.8 \times 10^{+05}$ Ci	^{138}Xe – $5.2 \times 10^{+05}$ Ci
	^{90}Kr – $3.8 \times 10^{+05}$ Ci	^{139}Xe – 4.2×10^{-05} Ci

An unirradiated fuel plate number-1 contains, on average, 19.26 grams of U-235, so four (4) unirradiated number-1 fuel plates contain 77.04 grams instead of the 78.58 grams assumed in the fuel failure analysis. These four number-1 fuel plates that melt correspond to 1.41% of the total U-235 in the Week 58 Core that was used to determine the high power peaking factor for the revised SLs. The Week 58 Core has a total power history of 576 MWd. This power history results in a total reduced core mass of 5,474 grams of U-235 due to the previous fuel consumption. This 1.41% of U-235 melting releases 3.42% of the core fission products due to the highest power density fuel plate number-1 overall peaking factor of 2.423, which is conservatively assumed to apply to all four (4) number-1 fuel plates (1.41% x 2.423 = 3.42%).

A conservative value of a 100% release of the radioiodine and noble gas fission products from the fuel is assumed in calculating the fission product inventory in the primary coolant system. It is also assumed that fission products released into the primary coolant are quickly and uniformly dispersed within the 2,000-gallon (7,571-l) primary coolant system volume and, during a normal week's operation, 80 gallons (7.9×10^{-3} gpm) of coolant leaks from the primary coolant system into the pool water. Therefore, the radioactivity released into the reactor pool in 10 minutes – determined to be the maximum personnel occupancy time in the containment building after the accident for necessary operational personnel – is as follows:

(Note: It would take approximately 5 minutes for Operations personnel to secure the primary coolant system and verify that the containment building has been evacuated following a containment building isolation. For the purpose of the fuel failure calculations, a conservative assumption of 10 minutes is used.)

Example calculation of ^{131}I released into the reactor pool:

= ^{131}I in fuel x 0.0342 x 1/2,000 gal x (7.9×10^{-03} gpm) x 10 min x 10^{+06} μCi/Ci
= ($1.7 \times 10^{+05}$ Ci) x ($1.3509 \times 10^{+00}$ μCi/Ci)
= $2.30 \times 10^{+05}$ μCi

Note: Same calculation is used for the other isotopes listed below.

Radioiodine and Noble Gas Activities Released Into the Pool after 10 Minutes

^{131}I – $2.30 \times 10^{+05}$ μCi	^{85}Kr – $6.35 \times 10^{+02}$ μCi	^{133}Xe – $5.67 \times 10^{+05}$ μCi
^{132}I – $4.46 \times 10^{+05}$ μCi	^{85m}Kr – $1.49 \times 10^{+05}$ μCi	^{135}Xe – $1.30 \times 10^{+05}$ μCi
^{133}I – $6.89 \times 10^{+05}$ μCi	^{87}Kr – $2.84 \times 10^{+05}$ μCi	^{135m}Xe – $1.27 \times 10^{+05}$ μCi
^{134}I – $8.52 \times 10^{+05}$ μCi	^{88}Kr – $4.04 \times 10^{+05}$ μCi	^{137}Xe – $6.63 \times 10^{+05}$ μCi
^{135}I – $7.02 \times 10^{+05}$ μCi	^{89}Kr – $5.13 \times 10^{+05}$ μCi	^{138}Xe – $7.02 \times 10^{+05}$ μCi
	^{90}Kr – $5.13 \times 10^{+05}$ μCi	^{139}Xe – $5.67 \times 10^{+05}$ μCi

Fission products released into the reactor pool will be detected by the pool surface and ventilation system exhaust plenum radiation monitors. However, for the purposes of this analysis, it is assumed that a reactor scram and actuation of the containment building isolation system occurs by action of the pool surface radiation monitor.

The radioiodine released into the reactor pool over a 10-minute interval is conservatively assumed to be instantly and uniformly mixed into the 20,000 gallons (75,708 l) of bulk pool water, which then results in the following pool water concentrations for the radioiodine isotopes. The water solubility of the krypton and xenon noble gases released into the pool over this same time period are ignored and they are assumed to pass immediately through the pool water and evolve directly into the containment building air volume where they instantaneously form a uniform concentration in the isolated structure.

Radioiodine Concentrations in the Pool Water

^{131}I – $1.15 \times 10^{+01}$ μCi/gal	^{133}I – $3.44 \times 10^{+01}$ μCi/gal	^{135}I – $3.51 \times 10^{+01}$ μCi/gal
^{132}I – $2.23 \times 10^{+01}$ μCi/gal	^{134}I – $4.26 \times 10^{+01}$ μCi/gal	

When the reactor is at 10 MW and the containment building ventilation system is in operation, the evaporation rate from the reactor pool is approximately 80 gallons (302.8 L) of water per day. For the purposes of this calculation, it is assumed that a total of 40 gallons (151 L) of pool water containing the previously listed radioiodine concentrations evaporates into the containment building over the 10 minute period. Containment air with a temperature of 75 °F (23.9 °C) and 100% relative humidity contains H_2O vapor equal to 40 gallons (151.4 L) of water. Since the air in containment is normally at about 50% relative humidity, thus containing approximately 40 gallons (151 L) of water vapor, the assumed addition of 40 gallons (151 L) of water vapor will not cause the containment air to be supersaturated. It is also conservatively assumed that all of the radioiodine activity in the 40 gallons (151 L) of pool water instantaneously forms a uniform concentration in the containment building air. When distributed into the containment building, this would result in the following radioiodine concentrations in the 225,000 ft^3 (6,371.3 m^3) air volume:

Example calculation of ^{131}I released into containment air:

= ^{131}I concentration in pool water x 40 gal x 1/225,000 ft^3 x 35.3147 ft^3/m^3
= $1.15 \times 10^{+01}$ μCi/gal x (6.28×10^{-03} gal/m^3)

$= 7.22 \times 10^{-02}$ µCi/m^3

$$(7.22 \times 10^{-02}\ \mu Ci/m^3) \times (1\ m^3/10^6\ ml) = 7.22 \times 10^{-08}\ \mu Ci/ml$$

Note: Same calculation is used for the other isotopes listed below.

The average radioiodine concentrations are the sum of the initial concentrations and the concentrations after 10 minutes decay divided by 2.

Average Radioiodine Concentrations in the Containment Building Air during the 10 Minutes

^{131}I – 7.22×10^{-08} µCi/ml	^{133}I – 2.16×10^{-07} µCi/ml	^{135}I – 2.18×10^{-07} µCi/ml
^{132}I – 1.36×10^{-07} µCi/ml	^{134}I – 2.53×10^{-07} µCi/ml	

As noted previously, the krypton and xenon noble gases released into the reactor pool from the primary coolant system during the assumed 10-minute interval following the fuel failure (Note: the primary coolant system is shut down and secured, and the leakage driving force is stopped within 10 minutes), are assumed to pass immediately through the pool water and enter the containment building air volume where they instantaneously form a uniform concentration in the isolated structure. Based on the 225,000-ft^3 volume of containment building air and the previously listed Curie quantities of these gases released into the reactor pool, the maximum noble gas concentrations in the containment building at the end of 10 minutes would be as follows:

Example calculation of ^{85}Kr released into containment air:

$= {}^{85}Kr$ activity $\times$ 1/225,000 ft^3 $\times$ 35.3147 ft^3/m^3
$= 6.35 \times 10^{+02}$ uCi $\times$ (1.60×10^{-04} 1/m^3)
$= 9.96 \times 10^{-02}$ µCi/m^3

$$(9.96 \times 10^{-02}\ \mu Ci/m^3) \times (1\ m^3/10^6\ ml) = 9.96 \times 10^{-08}\ \mu Ci/ml$$

Note: Same calculation is used for the other isotopes listed below.

The average noble gas concentrations are the sum of the initial concentrations and the concentrations after 10 minutes decay divided by 2.

Average Noble Gas Concentrations in the Containment Building Air during the 10 Minutes

Kr – 9.96×10^{-08} µCi/ml	^{133}Xe – 8.90×10^{-05} µCi/ml
^{85m}Kr – 2.30×10^{-05} µCi/ml	^{135}Xe – 2.02×10^{-05} µCi/ml
^{87}Kr – 4.27×10^{-05} µCi/ml	^{135m}Xe – 1.63×10^{-05} µCi/ml
^{88}Kr – 6.22×10^{-05} µCi/ml	^{137}Xe – 6.05×10^{-05} µCi/ml
^{89}Kr – 4.47×10^{-05} µCi/ml	^{138}Xe – 8.88×10^{-05} µCi/ml
^{90}Kr – 4.03×10^{-05} µCi/ml	^{139}Xe – 4.45×10^{-05} µCi/ml

The objective of this calculation is to present a worst-case dose assessment for an individual who remains in the containment building for 10 minutes following fuel failure. Therefore, as noted previously, the radioactivity in the evaporated pool water is assumed to be instantaneously and uniformly distributed into the building once released into the air.

Based on the source term data provided, it is possible to determine the radiation dose to the thyroid from radioiodine and the dose to the whole body resulting from submersion in the airborne noble gases and radioiodine inside the containment building. As previously noted, the exposure time for this dose assessment is 10 minutes.

Because the airborne radioiodine source is composed of five (5) different iodine isotopes, it will be necessary to determine the dose contribution from each individual isotope and to then sum the results. Dose multiplication factors were established using the Derived Air Concentrations (DACs) for the "listed" isotopes in Appendix B of 10 CFR 20 and Appendix C of 10 CFR 835 for the "unlisted" submersion isotopes, and the radionuclide concentrations in the containment building (Attachment 11).

Example calculation of thyroid dose due to ^{131}I:

The DAC can also be defined as 50,000 mrem (thyroid target organ limit)/2,000 hrs, or 25 mrem/DAC-hr. Additionally, 10 minutes of one DAC-hr is 1.67×10^{-01} DAC-hr.

^{131}I concentration in containment	=	7.22×10^{-08} µCi/ml
^{131}I DAC (10 CFR 20)	=	2.00×10^{-08} µCi/ml
Dose Multiplication Factor	=	(^{131}I concentration) / (^{131}I DAC)
	=	(7.22×10^{-08} µCi/ml) / (2.00×10^{-08} µCi/ml)
	=	3.61

Therefore, a 10-minute thyroid exposure from ^{131}I is:

= Dose Multiplication Factor x DAC Dose Rate x 10 minutes
= 3.61 x (25 mrem/DAC-hr) x (1.67×10^{-01} DAC-hr)
= $1.51 \times 10^{+01}$ mrem

Note: Same calculation is used for the other radioiodines listed below.

Derived Air Concentration Values and 10-Minute Exposures – Radioiodine

Radionuclide	Derived Air Concentration	10-Minute Exposure
^{131}I	2.00×10^{-08} µCi/ml	$1.51 \times 10^{+01}$ mrem
^{132}I	3.00×10^{-06} µCi/ml	1.89×10^{-01} mrem
^{133}I	1.00×10^{-07} µCi/ml	$8.99 \times 10^{+00}$ mrem
^{134}I	2.00×10^{-05} µCi/ml	5.27×10^{-02} mrem
^{135}I	7.00×10^{-07} µCi/ml	$1.30 \times 10^{+00}$ mrem
		Total = 25.58 mrem

Doses from the kryptons and xenons present in the containment building are assessed in much the same manner as the radioiodines, and the dose contribution from each individual radionuclide must be calculated and then added together to arrive at the final noble gas dose. Because the dose from the noble gases is only an external dose due to submersion, and because the DACs for these radionuclides are based on this type of exposure, the individual noble gas doses for 10 minutes in containment were based on their average concentration in the containment air and the corresponding DAC.

Example calculation of whole body dose due to ^{85}Kr:

The DAC can also be defined as 5,000 mrem/2,000 hrs, or 2.5 mrem/DAC-hr. Additionally, 10 minutes of one DAC-hr is 1.67×10^{-01} DAC-hr.

^{85}Kr concentration in containment	=	9.96×10^{-08} μCi/ml
^{85}Kr DAC (10 CFR 20)	=	1.00×10^{-04} μCi/ml
Dose Multiplication Factor	=	(^{85}Kr concentration) / (^{85}Kr DAC)
	=	(9.96×10^{-08} μCi/ml) / (1.00×10^{-04} μCi/ml)
	=	0.001

Therefore, a 10-minute whole body exposure from ^{85}Kr is:

= Dose Multiplication Factor x DAC Dose Rate x 10 minutes
= 0.001 x (2.5 mrem/DAC-hr) x (1.67×10^{-01} DAC-hr)
= 4.15×10^{-04} mrem

Note: Same calculation is used for the other noble gases listed below.

The DACs and the 10-minute exposure for each radioiodine and noble gas are tabulated below.

Derived Air Concentration Values and 10-Minute Exposures – Noble Gases

Radionuclide	Derived Air Concentration	10-Minute Exposure
^{85}Kr	1.00×10^{-04} µCi/ml	4.51×10^{-04} mrem
^{85m}Kr	2.00×10^{-05} µCi/ml	4.80×10^{-01} mrem
^{87}Kr	5.00×10^{-06} µCi/ml	$3.56 \times 10^{+00}$ mrem
^{88}Kr	2.00×10^{-06} µCi/ml	$1.30 \times 10^{+01}$ mrem
^{89}Kr	6.00×10^{-06} µCi/ml	$3.11 \times 10^{+00}$ mrem
^{90}Kr	6.00×10^{-06} µCi/ml	$2.80 \times 10^{+00}$ mrem
^{133}Xe	1.00×10^{-04} µCi/ml	3.71×10^{-01} mrem
^{135}Xe	1.00×10^{-05} µCi/ml	8.43×10^{-01} mrem
^{135m}Xe	9.00×10^{-06} µCi/ml	7.54×10^{-01} mrem
^{137}Xe	6.00×10^{-06} µCi/ml	$4.20 \times 10^{+00}$ mrem
^{138}Xe	4.00×10^{-06} µCi/ml	$9.25 \times 10^{+00}$ mrem
^{139}Xe	6.00×10^{-06} µCi/ml	$3.09 \times 10^{+00}$ mrem
		Total = 41.42 mrem

To finalize the occupational dose in terms of Total Effective Dose Equivalent (TEDE) for a 10-minute exposure in the containment building after target failure, the doses from the radioiodines and noble gases must be added together, and result in the following values:

10-Minute Dose from Radioidines and Noble Gases in the Containment Building

Committed Dose Equivalent (Thyroid):	**25.58 mrem**
Committed Effective Dose Equivalent (Thyroid):	**0.77 mrem**
Committed Effective Dose Equivalent (Noble Gases):	**41.42 mrem**
Total Effective Dose Equivalent (Whole Body):	**42.18 mrem**

By comparison of the maximum TEDE and Committed Dose Equivalent (CDE) for those occupationally-exposed during fuel failure to applicable NRC dose limits in 10 CFR 20, the final values are shown to be well within the published regulatory limits and, in fact, lower than 1% of any occupational limit.

Radiation shine through the containment structure was also evaluated when considering accident conditions and dose consequences to the public and MURR staff. Calculation of exposure rate from the target failure was performed using the computer program MicroShield 8.02 with a Rectangular Volume – External Dose Point geometry for the representation of the containment structure (Attachment 12). MicroShield 8.02 is a product of Grove Software and is a comprehensive photon/gamma ray shielding and dose assessment program that is widely used by industry for designing radiation shields.

The exposure rate values provided below represents the radiation fields at 1 foot (30.5 cm) from a 12-inch thick ordinary concrete containment wall and at the Emergency Planning Zone (EPZ)

boundary of 150 meters (492.1 ft). The airborne concentration source terms used to develop the exposure rate values are identical to those used for determining the dose to a worker within containment from noble gases. For radioiodine, the total iodine activity of the target was used for the dose calculations, not the amount that evaporated in 10 minutes. The source term also assumes a homogenous mixture of nuclides within the containment free volume.

Radiation Shine through the Containment Building

Exposure Rate at 1-Foot from Containment Building Wall:	**1.074 mrem/hr**
Exposure Rate at Emergency Planning Zone Boundary (150 meters):	**0.007 mrem/hr**

A confirmatory analysis of the accident condition yielding the largest consequence was validated independently by the use of the MCNP code. This analysis yielded a result 21% less than the Microshield method and results provided above.

As noted earlier in this analysis, the containment building ventilation system will shut down and the building itself will be isolated from the surrounding areas. Fuel failure will not cause an increase in pressure inside the reactor containment structure; therefore, any air leakage from the building will occur as a result of normal changes in atmospheric pressure and pressure equilibrium between the inside of the containment structure and the outside atmosphere. It is highly probable that there will be no pressure differential between the inside of the containment building and the outside atmosphere, and consequently there will be no air leakage from the building and no radiation dose to members of the public in the unrestricted area. However, to develop what would clearly be a worst-case scenario, this analysis assumes that a barometric pressure change had occurred in conjunction with the target failure. A reasonable assumption would be a pressure change on the order of 0.7 inches of Hg (25.4 mm of Hg at 60℃), which would then create a pressure differential of about 0.33 psig (2.28 kPa above atmosphere) between the inside of the isolated containment building and the inside of the adjacent laboratory building, which surrounds most of the containment structure. Making the conservative assumption that the containment building will leak at the TS leakage rate limit [10% of the contained volume over a 24-hour period from an initial overpressure of 2.0 psig (13.8 kPa above atmosphere)], the air leakage from the containment structure in standard cubic feet per minute (scfm) as a function of containment pressure can be expressed by the following equation:

$$LR = 17.85 \times (CP-14.7)^{1/2};$$

where:

LR = leakage rate from containment (scfm); and
CP = containment pressure (psia).

The minimum Technical Specification free volume of the containment building is 225,000-ft^3 at standard temperature and pressure. At an initial overpressure of 2.0 psig (13.8 kPa above atmosphere), the containment structure would hold approximately 255,612 standard cubic feet (scf) of air. A loss of 10%, from this initial overpressure condition, would result in a decrease in air

volume to 230,051 scf. The above equation describes the leakage rate that results in this drop of contained air volume over 1,440 minutes (24 hours).

When applying the Technical Specification leakage rate equation to the assumed initial overpressure condition of 0.33 psig (2.28 kPa above atmosphere), it would take approximately 16.5 hours for the leak rate to decrease to zero from an initial leakage rate of approximately 10.3 scfm, which would occur at the start of the event. The average leakage rate over the 16.5-hour period would be about 5.2 scfm.

Several factors exist that will mitigate the radiological impact of any air leakage from the containment building following target failure. First of all, most leakage pathways from containment discharge into the reactor laboratory building, which surrounds the containment structure. Since the laboratory building ventilation system continues to operate during target failure, leakage air captured by the ventilation exhaust system is mixed with other building air, and then discharged from the facility through the exhaust stack at a rate of approximately 30,500 cfm. Mixing of containment air leakage with the laboratory building ventilation flow, followed by discharge out the exhaust stack and subsequent atmospheric dispersion, results in extremely low radionuclide concentrations and very small radiation doses in the unrestricted area. A tabulation of these concentrations and doses is given below. These values were calculated following the same methodology stated in Section 5.3.3 of Addendum 3 to the MURR Hazards Summary Report [1].

A second factor which helps to reduce the potential radiation dose in the unrestricted area relates to the behavior of radioiodine, which has been studied extensively in the containment mockup facility at Oak Ridge National Laboratory (ORNL). From these experiments, it was shown that up to 75% of the iodine released will be deposited in the containment vessel. If, due to this 75% iodine deposition in the containment building, each cubic meter of air released from containment has a radioiodine concentration that is 25% of each cubic meter within containment building air, then the radioiodine concentrations leaking from the containment structure into the laboratory building, in microcuries per milliliter, will be:

Example calculation of ^{131}I released through the exhaust stack:

$$= {}^{131}I \text{ activity} / (30{,}500 \text{ ft}^3/\text{min} \times 16.5 \text{ hr} \times 60 \text{ min/hr} \times 28{,}300 \text{ ml/ft}^3)$$
$$= 2.30 \times 10^{+05} \ \mu\text{Ci} / 8.55 \times 10^{+11} \text{ ml}$$
$$= 2.69 \times 10^{-07} \ \mu\text{Ci/ml}$$

$$(2.69 \times 10^{-07} \ \mu\text{Ci/ml}) \times (0.25) = 6.73 \times 10^{-08} \ \mu\text{Ci/ml}$$

Note: Same calculation is used for the other radioiodines listed below.

<u>Radioiodine Concentrations in Air Leaking from Containment</u>

^{131}I – 6.73×10^{-08} µCi/ml	^{133}I – 2.02×10^{-07} µCi/ml	^{135}I – 2.05×10^{-07} µCi/ml
^{132}I – 1.30×10^{-07} µCi/ml	^{134}I – 2.49×10^{-07} µCi/ml	

Example calculation of ^{85}Kr released through the exhaust stack:

= ^{85}Kr activity / (30,500 ft^3/min x 16.5 hr x 60 min/hr x 28,300 ml/ft^3)
= $6.35 \times 10^{+02}$ µCi / $8.55 \times 10^{+11}$ ml
= 7.43×10^{-10} µCi/ml

Note: Same calculation is used for the other noble gases listed below.

Noble Gas Concentrations in Air Leaking from Containment and Exiting the Exhaust Stack

^{85}Kr – 7.43×10^{-10} µCi/ml	^{87}Kr – 3.32×10^{-07} µCi/ml	^{89}Kr – 6.00×10^{-07} µCi/ml
^{85m}Kr – 1.74×10^{-07} µCi/ml	^{88}Kr – 4.73×10^{-07} µCi/ml	^{90}Kr – 6.00×10^{-07} µCi/ml
^{133}Xe – 6.64×10^{-07} µCi/ml	^{135m}Xe – 1.49×10^{-07} µCi/ml	^{138}Xe – 8.22×10^{-07} µCi/ml
^{135}Xe – 1.52×10^{-07} µCi/ml	^{137}Xe – 7.76×10^{-07} µCi/ml	^{139}Xe – 6.64×10^{-07} µCi/ml

Assuming, as stated earlier, that (1) the average leakage rate from the containment building is 5.2 scfm, (2) the leak continues for about 16.5 hours in order to equalize the containment building pressure with atmospheric pressure, (3) the flow rate through the facility's ventilation exhaust stack is 30,500 scfm, (4) the reduction in concentration from the point of discharge at the exhaust stack to the point of maximum concentration in the unrestricted area is a factor of 292 and (5) there is no decay of any radioiodines or noble gases, then the following concentrations of radioiodines and noble gases with their corresponding radiation doses will occur in the unrestricted area. The values listed are for the point of maximum concentration in the unrestricted area assuming a uniform, semi-spherical cloud geometry for noble gas submersion and further assuming that the most conservative (worst-case) meteorological conditions exist for the entire 16.5-hour period of containment leakage following target failure. Radiation doses are calculated for the entire 16.5-hour period. Dose values for the unrestricted area were obtained using the same methodology that was used to determine doses inside the containment building, and it was assumed that an individual was present at the point of maximum concentration for the full 16.5 hours that the containment building was leaking.

A worst-case scenario dilution factor of 292 for effluent dilution using the Pasquill-Guifford Model for atmospheric dilution is used in this analysis. We assume that all offsite (public) dose occurs under these atmospheric conditions at the site of interest, i.e. 760 meters North of MURR. In our case at 760 meters it occurs only during Stability Class F conditions; which normally only occur 11.4% of the time when the wind blows from the south. Thus this calculation is conservative.

10 CFR 20 Appendix B Effluent Concentration Limits are used for the "listed" isotopes. An Effluent Concentration Limit of 2.0×10^{-08} µCi/ml is used for the "unlisted" isotopes, which equals the DAC/300 when using the DOE Part 835 Default DAC limits of 6.0×10^{-06} µC/ml. Exposure at 1 DAC gives 5000 mrem per year whereas at the effluent concentration limit it is 50 mrem per year. This is a factor of 100 times less for the effluent concentration limit as compared to the DAC. Exposure at the effluent concentration limit assumes you are in that effluent concentration for 8760 hours per year. Thus, the time assumed to be exposed to the effluent concentration limit is a factor of 4.38 longer than the 2000 hours per year that defines a DAC. The isotopes in question are based

on a default DAC limit of 6.0×10^{-06} μCi/ml for short-lived (< 2 hour half-lives) submersion DAC's in Appendix C of Part 835. No credit is taken for transit time from the stack to the receptor point nor is credit taken for decay inside containment until release. In the case of Kr-89 and Xe-137 the transit time alone would be approximately one (1) half-life while the transit time for Kr-90 and Xe-139 would be at least four (4) half-lives. Thus we believe that a factor of 300 reduction below the DAC value to establish the effluent concentration limit is warranted. This reduction factor of 300 is consistent, in fact more conservative, than 10 CFR 20 Appendix B, as the NRC calculates Effluent Concentration Limits for Submersion isotopes by dividing the DAC value by 219.

Example calculation of whole body dose in the unrestricted area due to ^{131}I:

Conversion Factor: (Public dose limit of 50 mrem/yr) x (1 yr/8760 hours) = 5.71×10^{-03} mrem/hr

^{131}I concentration	=	2.30×10^{-10} μCi/ml
^{131}I effluent concentration limit	=	2.00×10^{-10} μCi/ml
^{131}I Conversion Factor	=	5.71×10^{-03} mrem/hr

Therefore, a 16.5-hour whole body exposure from ^{131}I is:

= ^{131}I concentration / (^{131}I effluent concentration limit x Conversion Factor x 16.5 hrs)
= 2.30×10^{-10} μCi/ml / (2.00×10^{-10} μCi/ml x 5.71×10^{-03} mrem/hr x 16.5 hrs)
= 1.09×10^{-01} mrem

Note: Same calculation is used for the other isotopes (radioiodines and noble gases) listed below.

Effluent Concentration Limits, Concentrations at Point of Maximum Concentration and Radiation Doses in the Unrestricted Area – Radioiodine

Radionuclide	Effluent Limit	Maximum Concentration[1]	Radiation Dose
^{131}I	2.00×10^{-10} μCi/ml	2.30×10^{-10} μCi/ml	1.09×10^{-01} mrem
^{132}I	2.00×10^{-08} μCi/ml	4.47×10^{-10} μCi/ml	2.11×10^{-03} mrem
^{133}I	1.00×10^{-09} μCi/ml	6.90×10^{-10} μCi/ml	6.50×10^{-02} mrem
^{134}I	6.00×10^{-08} μCi/ml	8.54×10^{-10} μCi/ml	1.34×10^{-03} mrem
^{135}I	6.00×10^{-09} μCi/ml	7.03×10^{-10} μCi/ml	1.10×10^{-02} mrem
			Total = 0.19 mrem

Note 1: Maximum Concentrations are radioiodine and noble gas concentrations leaking from the containment building and exiting the exhaust stack reduced by a dilution factor of 292.

Effluent Concentration Limits, Concentrations at Point of Maximum Concentration and Radiation Doses in the Unrestricted Area – Noble Gases

Radionuclide	Effluent Limit	Maximum Concentration[1]	Radiation Dose
^{85}Kr	7.00×10^{-07} µCi/ml	2.54×10^{-12} µCi/ml	3.43×10^{-07} mrem
^{85m}Kr	1.00×10^{-07} µCi/ml	5.97×10^{-10} µCi/ml	5.63×10^{-04} mrem
^{87}Kr	2.00×10^{-08} µCi/ml	1.14×10^{-09} µCi/ml	5.36×10^{-03} mrem
^{88}Kr	9.00×10^{-09} µCi/ml	1.62×10^{-09} µCi/ml	1.69×10^{-02} mrem
^{89}Kr	2.00×10^{-08} µCi/ml	2.06×10^{-09} µCi/ml	9.69×10^{-03} mrem
^{90}Kr	2.00×10^{-08} µCi/ml	2.06×10^{-09} µCi/ml	9.69×10^{-03} mrem
^{133}Xe	5.00×10^{-07} µCi/ml	2.27×10^{-09} µCi/ml	4.28×10^{-04} mrem
^{135}Xe	7.00×10^{-08} µCi/ml	5.21×10^{-10} µCi/ml	7.01×10^{-04} mrem
^{135m}Xe	4.00×10^{-08} µCi/ml	5.09×10^{-10} µCi/ml	1.20×10^{-03} mrem
^{137}Xe	2.00×10^{-08} µCi/ml	2.66×10^{-09} µCi/ml	1.25×10^{-02} mrem
^{138}Xe	2.00×10^{-08} µCi/ml	2.81×10^{-09} µCi/ml	1.33×10^{-02} mrem
^{139}Xe	2.00×10^{-08} µCi/ml	2.27×10^{-09} µCi/ml	1.07×10^{-02} mrem
			Total = 0.08 mrem

Note 1: Maximum Concentrations are radioiodine and noble gas concentrations leaking from the containment building and exiting the exhaust stack reduced by a dilution factor of 292.

To finalize the unrestricted dose in terms of Total Effective Dose Equivalent (TEDE), the doses from the radioiodines and noble gases must be added together, and result in the following values:

Dose from Radioidines and Noble Gases in the Unrestricted Area

Committed Effective Dose Equivalent (Radioiodine)	**0.19 mrem**
Committed Effective Dose Equivalent (Noble Gases)	**0.08 mrem**
Total Effective Dose Equivalent (Whole Body)	**0.27 mrem**

Summing the doses from the noble gases and the radioiodines simply substantiates earlier statements regarding the very low levels in the unrestricted area should a failure of a fueled experiment occur, and should the containment building leak following such an event. Because the dose values are so low, the dose from the noble gases becomes the dominant value, but the overall TEDE is still only 0.19 mrem, a value far below the applicable 10 CFR 20 regulatory limit for the unrestricted area. Additionally, leakage in mechanical equipment room 114 from such items as valve packing, flange gaskets, pump mechanical seals, etc. was also considered in the fuel failure analysis. A realistic leakage rate of 60 milliliters within the 10-minute time interval was used - after 10 minutes the primary coolant system would be shutdown, isolated and depressurized as part of the control room operator's actions. The additional contaminated water vapor and associated isotopes added to the facility ventilation exhaust system made a minimal (<1%) contribution to the total dose of an individual located in the facility. Therefore, the dose contribution to the unrestricted area would be expected to be approaching zero.

13.2.1.3 Conclusions

Generally, the most severe condition which is analyzed with regard to reactor accidents is either a loss of primary coolant or a loss of primary coolant flow during reactor operation. Both of these accidents are analyzed in this chapter and the results show no core damage. In addition, there are no other accidents that will result in a release of fission products from the reactor fuel, which is assumed in the fuel failure analysis. Even if such an event were to occur, the anti-siphon and reactor loop vent systems are designed such that any released radioactivity would be contained in the primary coolant system.

System design and operational procedures reduce the likelihood of any foreign material being introduced into the reactor core that could cause a partial flow blockage. Calculations have been performed which indicate that even partial flow blockage to a fuel element will not result in cladding failure (Ref. 13.2). A considerable margin of safety has been designed into the system in this regard. Also, considering the results of the analyses which show no core damage in the event of a loss of primary coolant or a loss of primary coolant flow accident (See Sections 13.2.3 and 13.2.4), and in view of the design of the anti-siphon and reactor loop vent systems, it is concluded that there is no radiation risk to personnel in the reactor containment building or in the unrestricted area should one of these events occur.

References:

Same as those stated on pages v through vii of Chapter 13 of the SAR.

8. *NUREG-1537, Section 13.1.3, "Loss of Coolant," provides guidance to the licensee to consider the consequences of a loss of coolant accident (LOCA). MURR SAR Section 13.2.3.2 describes the LOCA event for the loss of the PCS integrity, and states that the accident of greatest consequence is a rupture in the short section of the PCS piping (either the cold leg or the hot leg) between the reactor pool and either isolation valves (507B or 507A). The SAR describes the consequences of a cold leg break between the isolation valve 507B and the reactor pool in significant detail. The hot leg break discussion is more succinct. The SAR also states that how "the anti-siphon system ensures that the core remains covered differs depending on the location of the rupture."*

   The NRC staff reviewed the event as described in the SAR and is considering the hot leg break sequence. It is our understanding that after isolation occurs the coolant surrounding the core heats up, and because of natural buoyancy it flows upward and out of the reactor pressure vessel into the in-pool heat exchanger. After passing through the heat exchanger, the cooled water may then flow downward through what is normally the upward flow path of the inverted loop and then into the bottom of the pressure vessel. As this process continues, the water will fill up the downward inverted loop to the bottom of the core reaching to the inverted loop creating an open condition for releasing the PCS coolant through the broken hot leg pipe. Explain the credibility of this event, and, if credible, provide a supporting analysis demonstrating acceptable core cooling and peak fuel temperatures, or justify why no additional information is needed.

   In the second paragraph of the above question, the NRC staff's stated understanding is closer to what occurs during a Loss of Flow Accident (LOFA) but not for the hot-leg break Loss of Coolant Accident (LOCA). The difference is that during the hot-leg break LOCA some of the primary coolant that is lost from the primary coolant system (PCS) piping is located in the reactor pool, but no primary coolant is lost during a LOFA. So, in the LOFA, the natural convention flow path described above is established and provides more than sufficient cooling for the reactor core after shutdown. During a hot-leg break LOCA, the anti-siphon system actuates and injects air into the PCS vertical 12-inch diameter piping above the inverted loop to the level of the in-pool heat exchanger outlet. The expanding air quickly voids the upper section of the potential PCS natural convention flow path.

   Key PCS components for the LOFA and LOCA are described in Table 1 along with their RELAP Model component number. These components are also indicated in the vertical cross-sectional view of the reactor pool and in-pool portion of the PCS (Figure 1).

Figure 1 – In-Pool Portion of the Primary Coolant System
(with RELAP Model components identified)

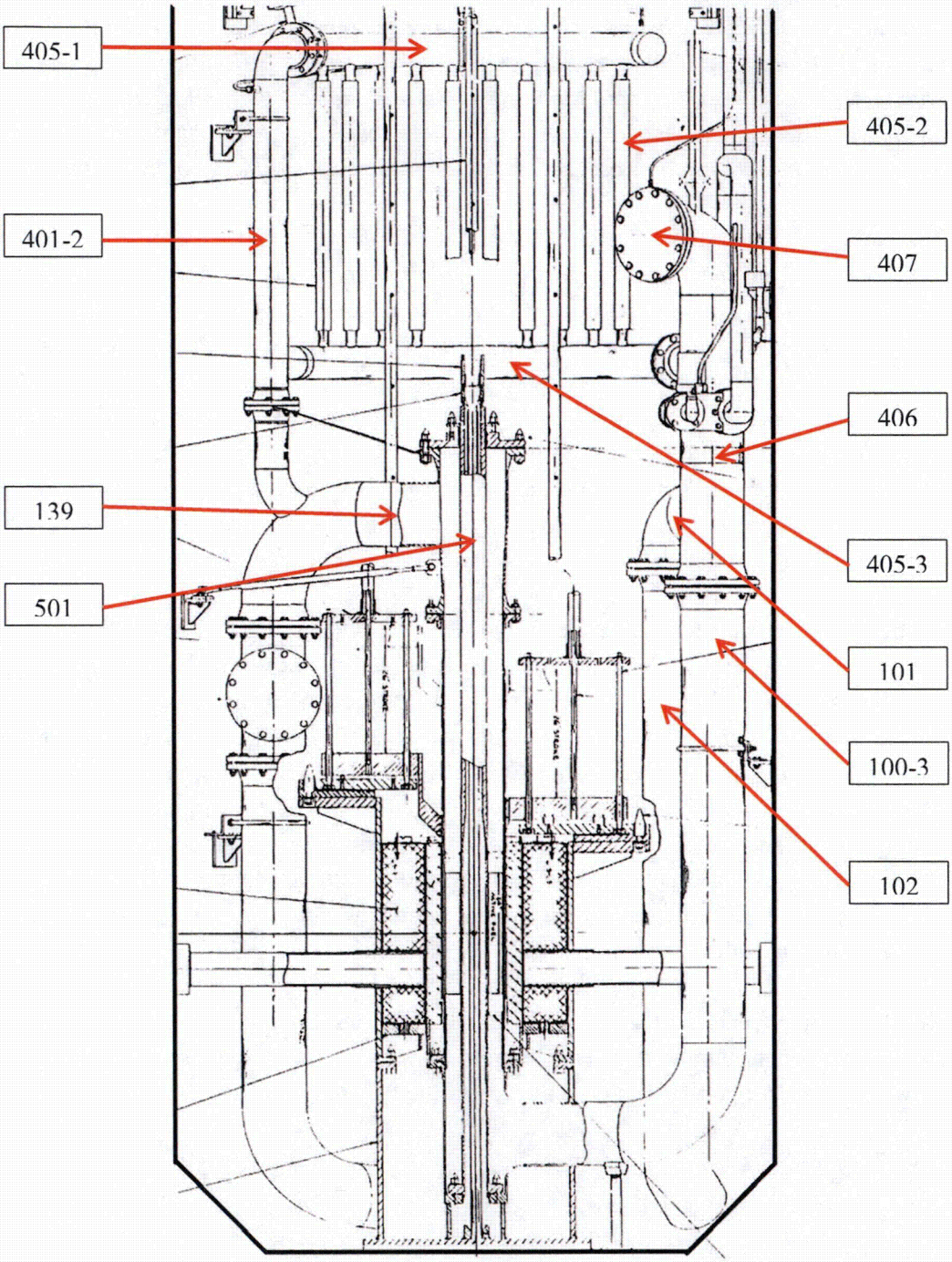

Table 1 – RELAP Model of In-Pool Portion of Primary Coolant System

RELAP No.	Component Description
405-1	In-Pool Heat Exchanger Upper Header
405-2	In-Pool Heat Exchanger Vertical Finned Tubes
405-3	In-Pool Heat Exchanger Lower Header
401-2	Last 4 feet of 6-inch Diameter Inlet Piping to In-Pool Heat Exchanger Upper Header
407	PCS Vertical 12-inch Diameter Pipe above In-Pool Heat Exchanger Outlet to Flanged Natural Circulation Piping
406	PCS Vertical 12-inch Diameter Pipe Above Inverted Loop to In-Pool Heat Exchanger Outlet
139	Horizontal PCS Inlet Piping to Upper Section of Pressure Vessel
501	Pressure Vessel Above the Core to Pressure Vessel Head
100-3	Last 4.917 feet of Vertical Hot-Leg Piping Before Joining Pipe No. 101
101	PCS Horizontal 12-inch Diameter Pipe (Section of Inverted Loop)
102	PCS Downward Vertical 12-inch Diameter Pipe from the Normal Outlet End of No. 101 Towards the PCS Hot-Leg Outlet Isolation Valve

With no pipe break occurring in the PCS during a LOFA, all of the above sections of the PCS stay filled with primary coolant. This results in the development of the natural circulation flow path described in Paragraph 2 of the above question. However, for the hot-leg break LOCA, a double shear on the inlet and outlet sides of the hot-leg isolation valve is assumed, such that the hot-leg isolation valve is functionally eliminated. With anti-siphon system air being injected into component 406, voiding starts at the higher elevated connected PCS components as indicated in Table 1 and Figure 1. With the air rising vertically, the following occurs:

- Component 407 is void of water in approximately 5 seconds.
- Component 401-2 is voided of water in about 8 seconds and the in-pool heat exchanger components (405-1, 405-2, 405-3) start draining. Also, the following components are draining:
- Components 139, 101, 406.
- Components 405-1, 405-2 and 139 have less than 1% water 16 seconds after the break.
- Component 406 joins them by 18 seconds.
- By 60 seconds, components 405-3 and 101 have no water in them.

It should be noted that components 401-2 and 139, which are on the cold-leg PCS inlet side of the reactor core, drain downward with the primary coolant which is flowing down the pressure vessel through the core and then up through the PCS hot-leg outlet piping until their upper level is in

equilibrium with the water level in component 101 or 100-3. With the in-pool portion of the PCS drained to this level, the natural circulation flow path through the in-pool heat exchanger is eliminated.

However, the hot-leg break LOCA RELAP analysis shows that the highest peak fuel center line temperature of 281.2 °F (138.4 °C) occurs in fuel plate number-1, 0.2 seconds after the LOCA begins. After this initial peak temperature at the start of the transient, the next highest fuel plate centerline temperature of 231.7 °F (110.9 °C) occurs in plate number-22 at 22 seconds as shown in SAR Figure 13.20. The highest coolant channel temperature 219.0 °F (103.9 °C) occurs in channel 7 at 123.3 seconds and in channel 6 at 123.4 seconds as shown in SAR Figure 13.21. There is sufficient heat transfer from the PCS to the pool coolant due to conduction through the PCS piping to avoid any fuel damage.

9. *NUREG-1537, Section 13.1.5, "Mishandling or Malfunction of Fuel" provides guidance that the licensee analyze the consequences of a mishandled fuel event. MURR SAR Section 13.2.5.2.1 describes damage to a fuel element due to mishandling. It states that the mishandling could occur during movement and packaging of the irradiated fuel, damage could only occur to the inner or the outer fuel plate, and could only occur during fuel element relocation activities. Because this accident occurs while the PCS is open there is minimal containment of fission products by the PCS. The response to RAI A.27 (ADAMS Accession No. ML120050315), provides an analysis of such an occurrence assuming that the fuel element has decayed for 60 days as part of the spent fuel movement from storage to a shipping container. However, the NRC staff questions whether this event could also occur during the initial stages of refueling which would invalidate the assumption of 60 days of decay. The NRC staff also performed a confirmatory calculation based on this inventory using the cited values for the MHA analysis, and it results in an inventory that is seven percent larger than reported by MURR.*

a. *Explain the possibility of this event occurring during the initial stages of refueling, and the applicability of using the stated decay time in the dose calculation. Also, describe any radioactivity release alarms that are expected to actuate, and whether containment isolation is expected, including the time required to verify containment isolation, or justify why no additional information is needed.*

Following the response to RAI 9.b is MURR's "Mishandling or Malfunction of Fuel" accident [referred to as the Fuel Handling Accident (FHA)] analysis using the same assumptions and methodologies as used in the Maximum Hypothetical Accident (MHA) (now referred to as the "Fuel Failure during Reactor Operation" accident) and Fueled Experiment Failure. The only exceptions are the source term, which is explained in the accident analysis, as well as the decay prior to the accident (which is once again explained in the analysis). As discussed in the response to RAI 10.a, the primary coolant system <u>does not</u> have to be secured for a failed fueled experiment or for a FHA. The only required action for Operations personnel is to verify that the containment building has been evacuated following a containment building isolation, which will occur during both of these accident scenarios. MURR performs an evacuation drill every year and the typical time period for all personal to evacuate the containment building, including verification by Operations personnel, is two (2) to two and a half (2.5) minutes. For the purposes of the failed fueled experiment and FHA calculations, a conservative assumption of five (5) minutes is used for both accident scenarios. Additionally, verifying that the reactor has shut down and containment has isolated only takes a few moments – all control blade positions, reactor power meters, and containment isolation valve and door indications are in clear view of the reactor operator in the control room.

b. *Provide the details of how the source term is determined, or justify why no additional information is needed.*

As described in the FHA analysis above, the two most outer fuel plates of a fuel element, number-1 and -24, are the plates most likely to be damaged during fuel handling. The number-1 fuel plate contains 19.26 grams of U-235 before irradiation. The highest peak power density in the various

MURR core configurations occurs in fuel plate number-1 of a previously unirradiated fuel element, which has a peaking factor of 4.116 – located between 14.75 to 15.75 inches down from the top of the fuel plate. The number-24 fuel plate has a lower peak power density and contains 45.32 grams of U-235, and has the most surface area to be damaged. To be conservative, the analysis assumes that 0.125 grams of U-235 is exposed from plate number-1 during the FHA, which corresponds to removing a section of fuel meat from a plate that is 1 inch square and 5 mils thick. A power peaking factor of 4.116 is also applied.

"Fuel Handling Accident (FHA)"

All fuel handling is performed in accordance with Special Nuclear Material (SNM) Control and Accounting Procedures as outlined in the Operations Procedures. Irradiated fuel is handled with a specially designed remote tool. The normal fuel handling tool is designed to provide a positive indication of latching prior to movement of a fuel element. This feature is tested prior to any fuel handling sequence. Fuel elements are always handled one at a time so that they are maintained in a criticality-safe configuration. New or irradiated fuel may be stored in any one of 88 in-pool fuel storage locations (not including the core). These storage locations are designed to ensure a geometry such that the calculated K_{eff} is less than 0.9 under all conditions of moderation, thus allowing sufficient convection cooling and providing sufficient radiation shielding.

So the fuel handling system provides a safe, effective and reliable means of transporting and handling reactor fuel from the time it enters the facility until it leaves. All cask lifting equipment, including the 15-ton capacity crane, is rigorously maintained, including preventive maintenance and magnetic particle testing, as appropriate. Therefore, no specific accidents regarding the handling of fuel have been identified for the MURR. The probability of dropping a fuel element while underwater and damaging it severely enough to breach the fuel cladding was considered. A conservative potential radionuclide release and calculation of the occupational exposure are included below.

The following calculations determining the postulated dose from a potential release of radioactivity from a fuel element during a handling accident closely follow the "Fuel Failure during Reactor Operation" calculations for personal exposure due to a release of fission products. The objective of these calculations is to present a worst-case dose assessment for a person who remains in the containment building for five (5) minutes following the release from a breached fuel element. MURR's fuel cycle averages having about 40 fuel elements in the cycle – divided into 20 pairs of elements. Paired elements are always loaded opposite each other in the core. All eight (8) fuel elements are replaced every refueling. MURR has averaged refueling the core more than 52 times a year since 1977. This type of accident has never occurred at MURR during any of these fuel handlings.

The two outer fuel plates of a fuel element, number-1 and -24, are the plates most likely to be damaged during fuel handling. The number-1 fuel plate contains 19.26 grams of U-235 before irradiation. The highest peak power density in the various MURR core configurations occurs in fuel plate number-1 of a previously unirradiated fuel element, which has a power peaking factor of 4.116 – located between 14.75 to 15.75 inches down from the top of the fuel plate. The number-24 fuel plate has the most surface area to be damaged; however, it has a lower peak power density and contains 45.32 grams of U-235. To be conservative, the analysis assumes that 0.125 grams of U-235 is exposed from plate number-1 during the FHA, which corresponds to removing a section of fuel meat from a plate that is 1 inch square and 5 mils thick. A power peaking factor of 4.116 is also applied.

The following radioiodine, krypton and xenon activities will be present in the MURR core 30 minutes after shutdown from 10 MW full power operation. Refuelings typically occur no sooner than an hour after shutdown. This takes into account the time required to shut down the reactor, to secure the primary coolant system (required to stay in operation a minimum of 15 minutes after the control blades are fully inserted), and to remove the reactor pressure vessel head. For the purpose of the FHA calculations, a conservative assumption of 30 minutes is used.

Radioiodine and Noble Gas Activities in the Core after 30-Minute Decay

^{131}I – $9.93 \times 10^{+04}$ Ci	^{85}Kr – $2.47 \times 10^{+01}$ Ci	^{133}Xe – $2.73 \times 10^{+05}$ Ci
^{132}I – $2.68 \times 10^{+05}$ Ci	^{85m}Kr – $1.29 \times 10^{+05}$ Ci	^{135}Xe – $1.13 \times 10^{+05}$ Ci
^{133}I – $5.65 \times 10^{+05}$ Ci	^{87}Kr – $1.67 \times 10^{+05}$ Ci	^{135m}Xe – $4.79 \times 10^{+04}$ Ci
^{134}I – $5.80 \times 10^{+05}$ Ci	^{88}Kr – $2.73 \times 10^{+05}$ Ci	^{137}Xe – $2.37 \times 10^{+03}$ Ci
^{135}I – $5.07 \times 10^{+07}$ Ci	^{89}Kr – $5.59 \times 10^{+02}$ Ci	^{138}Xe – $1.22 \times 10^{+05}$ Ci
	^{90}Kr – 6.66×10^{-12} Ci	^{139}Xe – 8.33×10^{-09} Ci

Fission products released into the reactor pool will be detected by the pool surface and ventilation system exhaust plenum radiation monitors. However, for the purposes of this analysis, it is assumed that an actuation of the containment building isolation system occurs by action of the pool surface radiation monitor. Actuation of the isolation system will prompt Operations personnel to ensure that a total evacuation of the containment building is accomplished promptly, usually within two (2) to two and a half (2.5) minutes. A conservative 5-minute evacuation time is used as the basis for the stay time in the dose calculations for personnel that are in containment during the FHA.

The following radioiodine and noble gas activities from 0.125 grams of U-235 from the peak power position of fuel plate number-1 in the peak power density fuel element are assumed to instantaneously and homogenously distribute in the reactor pool.

Example calculation of ^{131}I released into the reactor pool:

$$= (^{131}I \text{ in fuel} / {}^{235}U \text{ in core}) \times {}^{235}U \text{ exposed} \times \text{Power Peaking Factor} \times 10^{+06}\ \mu Ci/Ci$$
$$= (9.93 \times 10^{+04}\ Ci / 5{,}474 \text{ grams}) \times 0.125 \text{ grams} \times 4.116 \times 10^{+06}\ \mu Ci/Ci$$
$$= 9.33\ 10^{+06}\ \mu Ci$$

Example calculation of ^{85}Kr released into the reactor pool:

$$= (^{85}Kr \text{ in fuel} / {}^{235}U \text{ in core}) \times {}^{235}U \text{ exposed} \times PPF \times 10^{+06}\ \mu Ci/Ci$$
$$= (2.47 \times 10^{+01}\ Ci / 5{,}474 \text{ grams}) \times 0.125 \text{ grams} \times 4.116 \times 10^{+06}\ \mu Ci/Ci$$
$$= 2.32 \times 10^{+03}\ \mu Ci$$

Note: Same calculations are used for the other isotopes listed below.

Radioiodine and Noble Gas Activities Released into the Pool

^{131}I – $9.33 \times 10^{+06}$ µCi	^{85}Kr – $2.32 \times 10^{+03}$ µCi	^{133}Xe – $2.56 \times 10^{+07}$ µCi
^{132}I – $2.52 \times 10^{+07}$ µCi	^{85m}Kr – $1.21 \times 10^{+07}$ µCi	^{135}Xe – $1.06 \times 10^{+07}$ µCi
^{133}I – $5.31 \times 10^{+07}$ µCi	^{87}Kr – $1.57 \times 10^{+07}$ µCi	^{135m}Xe – $4.50 \times 10^{+06}$ µCi
^{134}I – $5.45 \times 10^{+07}$ µCi	^{88}Kr – $2.56 \times 10^{+07}$ µCi	^{137}Xe – $2.22 \times 10^{+05}$ µCi
^{135}I – $4.76 \times 10^{+07}$ µCi	^{89}Kr – $5.25 \times 10^{+04}$ µCi	^{138}Xe – $1.15 \times 10^{+07}$ µCi
	^{90}Kr – 6.26×10^{-10} µCi	^{139}Xe – 7.83×10^{-07} µCi

The radioiodine released into the reactor pool over a 5-minute interval is conservatively assumed to be instantly and uniformly mixed into the 20,000 gallons (75,708 l) of bulk pool water, which then results in the following pool water concentrations for the radioiodine isotopes. The water solubility of the krypton and xenon noble gases released into the pool over this same time period are ignored and they are assumed to pass immediately through the pool water and evolve directly into the containment building air volume where they instantaneously form a uniform concentration in the isolated structure.

Radioiodine Concentrations in the Pool Water

^{131}I – $4.67 \times 10^{+02}$ µCi/gal	^{133}I – $2.66 \times 10^{+03}$ µCi/gal	^{135}I – $2.38 \times 10^{+03}$ µCi/gal
^{132}I – $1.26 \times 10^{+03}$ µCi/gal	^{134}I – $2.73 \times 10^{+03}$ µCi/gal	

When the reactor is at 10 MW and the containment building ventilation system is in operation, the evaporation rate from the reactor pool is approximately 80 gallons (302.8 L) of water per day. For the purposes of this calculation, it is assumed that a total of 20 gallons (75.7 L) of pool water containing the previously listed radioiodine concentrations evaporates into the containment building over the 5 minute period. Containment air with a temperature of 75 °F (23.9 °C) and 100% relative humidity contains H_2O vapor equal to 40 gallons (151.4 L) of water. Since the air in containment is normally at about 50% relative humidity, thus containing 20 gallons (75.7 L) of water vapor, the assumed addition of 20 gallons (75.7 L) of water vapor will not cause the containment air to be supersaturated. It is also conservatively assumed that all of the radioiodine activity in the 20 gallons (75.7 L) of pool water instantaneously forms a uniform concentration in the containment building air. When distributed into the containment building, this would result in the following radioiodine concentrations in the 225,000 ft^3 (6,371.3 m^3) air volume:

Example calculation of ^{131}I released into containment air:

= ^{131}I concentration in pool water x 20 gal x 1/225,000 ft^3 x 35.3147 ft^3/m^3
= $4.67 \times 10^{+02}$ µCi/gal x (3.14×10^{-03} gal/m^3)
= 1.46 µCi/m^3

$$(1.46\ \mu Ci/m^3) \times (1\ m^3/10^6\ ml) = 1.46 \times 10^{-06}\ \mu Ci/ml$$

Note: Same calculation is used for the other isotopes listed below.

The average radioiodine concentrations are the sum of the initial concentrations and the concentrations after 5 minutes decay divided by 2.

Average Radioiodine Concentrations in the Containment Building Air during the 5 Minutes

^{131}I – 1.46×10^{-06} µCi/ml	^{133}I – 8.32×10^{-06} µCi/ml	^{135}I – 7.44×10^{-06} µCi/ml
^{132}I – 3.91×10^{-06} µCi/ml	^{134}I – 8.28×10^{-05} µCi/ml	

As noted previously, the krypton and xenon noble gases released into the reactor pool during the 5-minute interval following the FHA, are assumed to pass immediately through the pool water and enter the containment building air volume where they instantaneously form a uniform concentration in the isolated structure. This assumption is extremely conservative since it ignores the known solubility of krypton and xenon noble gases in the 100 °F (37.8 °C) pool water, which would reduce their release into the containment building. Based on the 225,000-ft^3 volume of containment building air, and the previously listed curie quantities of these gases released into the reactor pool, the maximum noble gas concentrations in the containment structure at the end of 5 minutes would be as follows:

Example calculation of ^{85}Kr released into containment air:

$$= {}^{85}Kr \text{ activity} \times 1/225{,}000\ ft^3 \times 35.3147\ ft^3/m^3$$
$$= 2.32 \times 10^{+03}\ \mu Ci \times (1.60 \times 10^{-04}\ 1/m^3)$$
$$= 3.64 \times 10^{-01}\ \mu Ci/m^3$$

$$(3.64 \times 10^{-01}\ \mu Ci/m^3) \times (1\ m^3/10^6\ ml) = 3.64 \times 10^{-07}\ \mu Ci/ml$$

Note: Same calculation is used for the other isotopes listed below.

The average noble gas concentrations are the sum of the initial concentrations and the concentrations after 5 minutes decay divided by 2.

Average Noble Gas Concentrations in the Containment Building Air during the 5 Minutes

Kr – 3.64×10^{-07} µCi/ml	^{133}Xe – 4.02×10^{-03} µCi/ml
^{85m}Kr – 1.89×10^{-03} µCi/ml	^{135}Xe – 1.66×10^{-03} µCi/ml
^{87}Kr – 2.41×10^{-03} µCi/ml	^{135m}Xe – 6.35×10^{-04} µCi/ml
^{88}Kr – 3.98×10^{-03} µCi/ml	^{137}Xe – 2.45×10^{-05} µCi/ml
^{89}Kr – 5.49×10^{-06} µCi/ml	^{138}Xe – 1.61×10^{-03} µCi/ml
^{90}Kr – 4.92×10^{-20} µCi/ml	^{139}Xe – 6.18×10^{-17} µCi/ml

The objective of this calculation is to present a worst-case dose assessment for an individual who remains in the containment building for 5 minutes following the FHA. Therefore, as noted previously, the radioactivity in the evaporated pool water is assumed to be instantaneously and uniformly distributed into the building once released into the air.

Based on the source term data provided, it is possible to determine the radiation dose to the thyroid from radioiodine and the dose to the whole body resulting from submersion in the airborne noble gases and radioiodine inside the containment building. As previously noted, the exposure time for this dose assessment is 5 minutes.

Because the airborne radioiodine source is composed of five different iodine isotopes, it will be necessary to determine the dose contribution from each individual isotope and to then sum the results. Dose multiplication factors were established using the Derived Air Concentrations (DACs) for the "listed" isotopes in Appendix B of 10 CFR 20 and Appendix C of 10 CFR 835 for the "unlisted" submersion isotopes, and the radionuclide concentrations in the containment building (Attachment 11).

Example calculation of thyroid dose due to ^{131}I:

The DAC can also be defined as 50,000 mrem (thyroid target organ limit)/2,000 hrs, or 25 mrem/DAC-hr. Additionally, 5 minutes of one DAC-hr is 8.33×10^{-02} DAC-hr.

^{131}I concentration in containment	=	1.46×10^{-06} μCi/ml
^{131}I DAC (10 CFR 20)	=	2.00×10^{-08} μCi/ml
Dose Multiplication Factor	=	(^{131}I concentration) / (^{131}I DAC)
	=	(1.46×10^{-06} μCi/ml) / (2.00×10^{-08} μCi/ml)
	=	73

Therefore, a 5-minute thyroid exposure from ^{131}I is:

= Dose Multiplication Factor x DAC Dose Rate x 5 minutes
= 73 x (25 mrem/DAC-hr) x (8.33×10^{-02} DAC-hr)
= $1.52 \times 10^{+02}$ mrem

Note: Same calculation is used for the other radioiodines listed below.

Doses from the kryptons and xenons present in the containment building are assessed in much the same manner as the radioiodines, and the dose contribution from each individual radionuclide must be calculated and then added together to arrive at the final noble gas dose. Because the dose from the noble gases is only an external dose due to submersion, and because the DACs for these radionuclides are based on this type of exposure, the individual noble gas doses for 5 minutes in containment were based on their average concentration in the containment air and the corresponding DAC.

Example calculation of whole body dose due to ^{85}Kr:

The DAC can also be defined as 5,000 mrem/2,000 hrs, or 2.5 mrem/DAC-hr. Additionally, 5 minutes of one DAC-hr is 8.33×10^{-02} DAC-hr.

^{85}Kr concentration in containment = 3.64×10^{-07} μCi/ml

^{85}Kr DAC (10 CFR 20)	=	1.00×10^{-04} µCi/ml
Dose Multiplication Factor	=	(^{85}Kr concentration) / (^{85}Kr DAC)
	=	(3.64×10^{-07} µCi/ml) / (1.00×10^{-04} µCi/ml)
	=	0.00364

Therefore, a 5 minute whole body exposure from ^{85}Kr is:

= Dose Multiplication Factor x DAC Dose Rate x 5 minutes
= 0.00364 x (2.5 mrem/DAC-hr) x (8.33×10^{-02} DAC-hr)
= 7.58×10^{-04} mrem

Note: Same calculation is used for the other noble gases listed below.

The DACs and the 5-minute exposure for each radioiodine and noble gas are tabulated below.

Derived Air Concentration Values and 5-Minute Exposures – Radioiodine

Radionuclide	Derived Air Concentration	5-Minute Exposure
^{131}I	2.00×10^{-08} µCi/ml	$1.52 \times 10^{+02}$ mrem
^{132}I	3.00×10^{-06} µCi/ml	$2.71 \times 10^{+00}$ mrem
^{133}I	1.00×10^{-07} µCi/ml	$1.73 \times 10^{+02}$ mrem
^{134}I	2.00×10^{-05} µCi/ml	8.62×10^{-01} mrem
^{135}I	7.00×10^{-07} µCi/ml	$2.21 \times 10^{+01}$ mrem
		Total = 351.44 mrem

Derived Air Concentration Values and 5-Minute Exposures – Noble Gases

Radionuclide	Derived Air Concentration	5-Minute Exposure
^{85}Kr	1.00×10^{-04} µCi/ml	7.58×10^{-04} mrem
^{85m}Kr	2.00×10^{-05} µCi/ml	$1.96 \times 10^{+01}$ mrem
^{87}Kr	5.00×10^{-06} µCi/ml	$1.00 \times 10^{+02}$ mrem
^{88}Kr	2.00×10^{-06} µCi/ml	$4.14 \times 10^{+02}$ mrem
^{89}Kr	6.00×10^{-06} µCi/ml	1.91×10^{-01} mrem
^{90}Kr	6.00×10^{-06} µCi/ml	1.71×10^{-15} mrem
^{133}Xe	1.00×10^{-04} µCi/ml	$8.36 \times 10^{+00}$ mrem
^{135}Xe	1.00×10^{-05} µCi/ml	$3.45 \times 10^{+01}$ mrem
^{135m}Xe	9.00×10^{-06} µCi/ml	$1.47 \times 10^{+01}$ mrem
^{137}Xe	6.00×10^{-06} µCi/ml	8.49×10^{-01} mrem
^{138}Xe	4.00×10^{-06} µCi/ml	$8.37 \times 10^{+01}$ mrem
^{139}Xe	6.00×10^{-06} µCi/ml	2.14×10^{-12} mrem
		Total = 676.45 mrem

To finalize the occupational dose in terms of Total Effective Dose Equivalent (TEDE) for a 5-minute exposure in the containment building after a FHA, the doses from the radioiodines and noble gases must be added together, and result in the following values:

5-Minute Dose from Radioidines and Noble Gases in the Containment Building

Committed Dose Equivalent (Thyroid)	**351.44 mrem**
Committed Effective Dose Equivalent (Thyroid)	**10.54 mrem**
Committed Effective Dose Equivalent (Noble Gases)	**676.45 mrem**
Total Effective Dose Equivalent (Whole Body)	**687.00 mrem**

By comparison of the maximum TEDE and Committed Dose Equivalent (CDE) for those occupationally-exposed during a FHA to applicable NRC dose limits in 10 CFR 20, the final values are shown to be well within the published regulatory limits and, in fact, lower than 15% of any occupational limit.

Radiation shine through the containment structure was also evaluated when considering accident conditions and dose consequences to the public and MURR staff. Calculation of exposure rate from a FHA was performed using the computer program MicroShield 8.02 with a Rectangular Volume – External Dose Point geometry for the representation of the containment structure (Attachment 12). MicroShield 8.02 is a product of Grove Software and is a comprehensive photon/gamma ray shielding and dose assessment program that is widely used by industry for designing radiation shields.

The exposure rate values provided below represents the radiation fields at 1 foot (30.5 cm) from a 12-inch thick ordinary concrete containment wall and at the Emergency Planning Zone (EPZ) boundary of 150 meters (492.1 ft). The airborne concentration source terms used to develop the exposure rate values are identical to those used for determining the dose to a worker within containment from noble gases. For radioiodine, the total iodine activity from the FHA was used for the dose calculations, not the amount that evaporated in 5 minutes. The source term also assumes a homogenous mixture of nuclides within the containment free volume.

Radiation Shine through the Containment Building

Exposure Rate at 1-Foot from Containment Building Wall:	**54.79 mrem/hr**
Exposure Rate at Emergency Planning Zone Boundary (150 meters):	**0.371 mrem/hr**

A confirmatory analysis of the accident condition yielding the largest consequence was validated independently by the use of the MCNP code. This analysis yielded a result 21% less than the Microshield method and results provided above.

As noted earlier in this analysis, the containment building ventilation system will shut down and the building itself will be isolated from the surrounding areas. A FHA will not cause an increase in pressure inside the reactor containment structure; therefore, any air leakage from the building will occur as a result of normal changes in atmospheric pressure and pressure equilibrium between the

inside of the containment structure and the outside atmosphere. It is highly probable that there will be no pressure differential between the inside of the containment building and the outside atmosphere, and consequently there will be no air leakage from the building and no radiation dose to members of the public in the unrestricted area. However, to develop what would clearly be a worst-case scenario, this analysis assumes that a barometric pressure change had occurred in conjunction with a FHA. A reasonable assumption would be a pressure change on the order of 0.7 inches of Hg (25.4 mm of Hg at 60 ℃), which would then create a pressure differential of about 0.33 psig (2.28 kPa above atmosphere) between the inside of the isolated containment building and the inside of the adjacent laboratory building, which surrounds most of the containment structure. Making the conservative assumption that the containment building will leak at the TS leakage rate limit [10% of the contained volume over a 24-hour period from an initial overpressure of 2.0 psig (13.8 kPa above atmosphere)], the air leakage from the containment structure in standard cubic feet per minute (scfm) as a function of containment pressure can be expressed by the following equation:

$$LR = 17.85 \times (CP-14.7)^{1/2};$$

where:

LR = leakage rate from containment (scfm); and
CP = containment pressure (psia).

The minimum Technical Specification free volume of the containment building is 225,000-ft^3 at standard temperature and pressure. At an initial overpressure of 2.0 psig (13.8 kPa above atmosphere), the containment structure would hold approximately 255,612 standard cubic feet (scf) of air. A loss of 10%, from this initial overpressure condition, would result in a decrease in air volume to 230,051 scf. The above equation describes the leakage rate that results in this drop of contained air volume over 1,440 minutes (24 hours).

When applying the Technical Specification leakage rate equation to the assumed initial overpressure condition of 0.33 psig (2.28 kPa above atmosphere), it would take approximately 16.5 hours for the leak rate to decrease to zero from an initial leakage rate of approximately 10.3 scfm, which would occur at the start of the event. The average leakage rate over the 16.5-hour period would be about 5.2 scfm.

Several factors exist that will mitigate the radiological impact of any air leakage from the containment building following a FHA. First of all, most leakage pathways from containment discharge into the reactor laboratory building, which surrounds the containment structure. Since the laboratory building ventilation system continues to operate during a FHA, leakage air captured by the ventilation exhaust system is mixed with other building air, and then discharged from the facility through the exhaust stack at a rate of approximately 30,500 cfm. Mixing of containment air leakage with the laboratory building ventilation flow, followed by discharge out the exhaust stack and subsequent atmospheric dispersion, results in extremely low radionuclide concentrations and very small radiation doses in the unrestricted area. A tabulation of these concentrations and doses

is given below. These values were calculated following the same methodology stated in Section 5.3.3 of Addendum 3 to the MURR Hazards Summary Report [1].

A second factor which helps to reduce the potential radiation dose in the unrestricted area relates to the behavior of radioiodine, which has been studied extensively in the containment mockup facility at Oak Ridge National Laboratory (ORNL). From these experiments, it was shown that up to 75% of the iodine released will be deposited in the containment vessel [2]. If, due to this 75% iodine deposition in the containment building, each cubic meter of air released from containment has a radioiodine concentration that is 25% of each cubic meter within containment building air, then the radioiodine concentrations leaking from the containment structure into the laboratory building, in microcuries per milliliter, will be:

Example calculation of ^{131}I released through the exhaust stack:

$$= {}^{131}I \text{ activity} / (30{,}500\ ft^3/min \times 16.5\ hr \times 60\ min/hr \times 28{,}300\ ml/ft^3)$$
$$= 9.33 \times 10^{+06}\ \mu Ci / 8.55 \times 10^{+11}\ ml$$
$$= 1.09 \times 10^{-05}\ \mu Ci/ml$$

$$(1.09 \times 10^{-05}\ \mu Ci/ml) \times (0.25) = 2.73 \times 10^{-06}\ \mu Ci/ml$$

Note: Same calculation is used for the other radioiodines listed below.

Radioiodine Concentrations in Air Leaking from Containment and Exiting the Exhaust Stack

^{131}I – 2.73×10^{-06} µCi/ml	^{133}I – 1.55×10^{-05} µCi/ml	^{135}I – 1.39×10^{-05} µCi/ml
^{132}I – 7.37×10^{-06} µCi/ml	^{134}I – 1.59×10^{-05} µCi/ml	

Example calculation of ^{85}Kr released through the exhaust stack:

$$= {}^{85}Kr \text{ activity} / (30{,}500\ ft^3/min \times 16.5\ hr \times 60\ min/hr \times 28{,}300\ ml/ft^3)$$
$$= 2.32 \times 10^{+03}\ \mu Ci / 8.55 \times 10^{+11}\ ml$$
$$= 2.71 \times 10^{-09}\ \mu Ci/ml$$

Note: Same calculation is used for the other noble gases listed below.

Noble Gas Concentrations in Air Leaking from Containment and Exiting the Exhaust Stack

^{85}Kr – 2.71×10^{-09} µCi/ml	^{87}Kr – 1.84×10^{-05} µCi/ml	^{89}Kr – 6.14×10^{-08} µCi/ml
^{85m}Kr – 1.42×10^{-05} µCi/ml	^{88}Kr – 3.00×10^{-05} µCi/ml	^{90}Kr – 7.33×10^{-22} µCi/ml
^{133}Xe – 3.00×10^{-05} µCi/ml	^{135m}Xe – 5.27×10^{-06} µCi/ml	^{138}Xe – 1.35×10^{-05} µCi/ml
^{135}Xe – 1.24×10^{-05} µCi/ml	^{137}Xe – 2.60×10^{-07} µCi/ml	^{139}Xe – 9.16×10^{-19} µCi/ml

Assuming, as stated earlier, that (1) the average leakage rate from the containment building is 5.2 scfm, (2) the leak continues for about 16.5 hours in order to equalize the containment building pressure with atmospheric pressure, (3) the flow rate through the facility's ventilation exhaust stack

is 30,500 scfm, (4) the reduction in concentration from the point of discharge at the exhaust stack to the point of maximum concentration in the unrestricted area is a factor of 292 and (5) there is no decay of any radioiodines or noble gases, then the following concentrations of radioiodines and noble gases with their corresponding radiation doses will occur in the unrestricted area. The values listed are for the point of maximum concentration in the unrestricted area assuming a uniform, semi-spherical cloud geometry for noble gas submersion and further assuming that the most conservative (worst-case) meteorological conditions exist for the entire 16.5-hour period of containment leakage following a FHA. Radiation doses are calculated for the entire 16.5-hour period. Dose values for the unrestricted area were obtained using the same methodology that was used to determine doses inside the containment building, and it was assumed that an individual was present at the point of maximum concentration for the full 16.5 hours that the containment building was leaking.

A worst-case scenario dilution factor of 292 for effluent dilution using the Pasquill-Guifford Model for atmospheric dilution is used in this analysis. We assume that all offsite (public) dose occurs under these atmospheric conditions at the site of interest, i.e. 760 meters North of MURR. In our case at 760 meters it occurs only during Stability Class F conditions; which normally only occur 11.4% of the time when the wind blows from the south. Thus this calculation is conservative.

10 CFR 20 Appendix B Effluent Concentration Limits are used for the "listed" isotopes. An Effluent Concentration Limit of 2.0×10^{-08} μCi/ml is used for the "unlisted" isotopes, which equals the DAC/300 when using the DOE Part 835 Default DAC limits of 6.0×10^{-06} μC/ml. Exposure at 1 DAC gives 5000 mrem per year whereas at the effluent concentration limit it is 50 mrem per year. This is a factor of 100 times less for the effluent concentration limit as compared to the DAC. Exposure at the effluent concentration limit assumes you are in that effluent concentration for 8760 hours per year. Thus, the time assumed to be exposed to the effluent concentration limit is a factor of 4.38 longer than the 2000 hours per year that defines a DAC. The isotopes in question are based on a default DAC limit of 6.0×10^{-06} μCi/ml for short-lived (< 2 hour half-lives) submersion DAC's in Appendix C of Part 835. No credit is taken for transit time from the stack to the receptor point nor is credit taken for decay inside containment until release. In the case of Kr-89 and Xe-137 the transit time alone would be approximately one (1) half-life while the transit time for Kr-90 and Xe-139 would be at least four (4) half-lives. Thus we believe that a factor of 300 reduction below the DAC value to establish the effluent concentration limit is warranted. This reduction factor of 300 is consistent, in fact more conservative, than 10 CFR 20 Appendix B, as the NRC calculates Effluent Concentration Limits for Submersion isotopes by dividing the DAC value by 219.

Example calculation of whole body dose in the unrestricted area due to ^{131}I:

Conversion Factor: (Public dose limit of 50 mrem/yr) x (1 yr/8760 hours) = 5.71×10^{-03} mrem/hr

^{131}I concentration	=	9.35×10^{-09} μCi/ml
^{131}I effluent concentration limit	=	2.00×10^{-10} μCi/ml
^{131}I Conversion Factor	=	5.71×10^{-03} mrem/hr

Therefore, a 16.5-hour whole body exposure from ^{131}I is:

= ^{131}I concentration / (^{131}I effluent concentration limit x Conversion Factor x 16.5 hrs)
= 9.35×10^{-09} µCi/ml / (2.00×10^{-10} µCi/ml x 5.71×10^{-03} mrem/hr x 16.5 hrs)
= $4.40 \times 10^{+00}$ mrem

Note: Same calculation is used for the other isotopes (radioiodines and noble gases) listed below.

Effluent Concentration Limits, Concentrations at Point of Maximum Concentration and Radiation Doses in the Unrestricted Area – Radioiodine

Radionuclide	Effluent Limit	Maximum Concentration[1]	Radiation Dose
^{131}I	2.00×10^{-10} µCi/ml	9.35×10^{-09} µCi/ml	$4.40 \times 10^{+00}$ mrem
^{132}I	2.00×10^{-08} µCi/ml	2.52×10^{-08} µCi/ml	1.19×10^{-01} mrem
^{133}I	1.00×10^{-09} µCi/ml	5.32×10^{-08} µCi/ml	$5.01 \times 10^{+00}$ mrem
^{134}I	6.00×10^{-08} µCi/ml	5.46×10^{-08} µCi/ml	8.57×10^{-02} mrem
^{135}I	6.00×10^{-09} µCi/ml	4.77×10^{-08} µCi/ml	7.49×10^{-01} mrem
			Total = 10.37 mrem

Note 1: Maximum Concentrations are radioiodine and noble gas concentrations leaking from the containment building and exiting the exhaust stack reduced by a dilution factor of 292.

Effluent Concentration Limits, Concentrations at Point of Maximum Concentration and Radiation Doses in the Unrestricted Area – Noble Gases

Radionuclide	Effluent Limit	Maximum Concentration[1]	Radiation Dose
^{85}Kr	7.00×10^{-07} µCi/ml	9.30×10^{-12} µCi/ml	1.25×10^{-06} mrem
^{85m}Kr	1.00×10^{-07} µCi/ml	4.85×10^{-08} µCi/ml	4.57×10^{-02} mrem
^{87}Kr	2.00×10^{-08} µCi/ml	6.29×10^{-08} µCi/ml	2.96×10^{-01} mrem
^{88}Kr	9.00×10^{-09} µCi/ml	1.03×10^{-07} µCi/ml	$1.07 \times 10^{+00}$ mrem
^{89}Kr	2.00×10^{-08} µCi/ml	2.10×10^{-10} µCi/ml	9.91×10^{-04} mrem
^{90}Kr	2.00×10^{-08} µCi/ml	2.51×10^{-24} µCi/ml	1.18×10^{-17} mrem
^{133}Xe	5.00×10^{-07} µCi/ml	1.03×10^{-07} µCi/ml	1.93×10^{-02} mrem
^{135}Xe	7.00×10^{-08} µCi/ml	4.25×10^{-08} µCi/ml	5.72×10^{-02} mrem
^{135m}Xe	4.00×10^{-08} µCi/ml	1.80×10^{-08} µCi/ml	4.25×10^{-02} mrem
^{137}Xe	2.00×10^{-08} µCi/ml	8.90×10^{-10} µCi/ml	4.19×10^{-03} mrem
^{138}Xe	2.00×10^{-08} µCi/ml	4.61×10^{-08} µCi/ml	2.17×10^{-01} mrem
^{139}Xe	2.00×10^{-08} µCi/ml	3.14×10^{-21} µCi/ml	1.48×10^{-14} mrem
			Total = 1.76 mrem

Note 1: Maximum Concentrations are radioiodine and noble gas concentrations leaking from the containment building and exiting the exhaust stack reduced by a dilution factor of 292.

To finalize the unrestricted dose in terms of Total Effective Dose Equivalent (TEDE), the doses from the radioiodines and noble gases must be added together, and result in the following values:

Dose from Radioidines and Noble Gases in the Unrestricted Area

Committed Effective Dose Equivalent (Radioiodine)	**10.37 mrem**
Committed Effective Dose Equivalent (Noble Gases)	**1.76 mrem**
Total Effective Dose Equivalent (Whole Body)	**12.13 mrem**

Summing the doses from the noble gases and the radioiodines simply substantiates earlier statements regarding the very low levels in the unrestricted area should a FHA occur, and should the containment building leak following such an event. Because the dose values are so low, the dose from the noble gases becomes the dominant value, but the overall TEDE is still only 12.13 mrem, a value far below the applicable 10 CFR 20 regulatory limit for the unrestricted area.

10. *NUREG-1537, Section 13.1.6, "Experiment Malfunction" provides guidance that the licensees analyze the consequences of a failed fueled experiment. SAR Section 13.2.6.2 describes that limiting fueled experiments to 150 curies of radioiodine will result in a projected dose well within the limits of 10 CFR Part 20. The response to RAI 13.9.a (ADAMS Accession No. ML103060018) provides radioiodine and noble gas activities for a 5-gram low-enriched fuel target. The response uses a method similar to that used in the MHA analysis and lists the gaseous fission products to be released into the pool cooling system. The occupational dose calculation assumes a 2-minute evacuation time. The NRC staff notes that the submersion dose calculations were performed using the DAC values, but the DAC data for isotopes with half-lives of less than 2 hours that are not listed in Table 1 of Appendix B are not consistent with the recommended value of 1×10^{-7} μCi/ml. The NRC staff notes that the 2-minute evacuation time is not consistent with the 10-minute evacuation time assumed in the MHA analysis, or the SAR Section 13.2.1.2 statement that it takes the operations staff approximately 5 minutes to secure the PCS and verify containment isolation following a containment isolation signal.*

    a. *Please clarify the sequence of events, state which alarms are expected to provide indication that evacuation is required, justify the evacuation time, and use that time to revise the dose assessment employing consistent DAC values, or justify why no additional information is needed.*

Following the response to RAI 10.c is the revised fueled experiment failure analysis that replaces the one (RAI 13.9.a) that was submitted as part of the responses, by letter dated October 29, 2010, to a Request for Additional Information made by the NRC (by letter dated May 6, 2010). As previously discussed in the response to Question 6.c, and what is stated on Page 13-5 of the SAR, the evacuation time for the MHA is 10 minutes based on the following: "It would take approximately 5 minutes for Operations personnel to secure the primary coolant system and verify that the containment building has been evacuated following a containment building isolation. For the purpose of the MHA calculations, a conservative assumption of 10 minutes is used."

However, the primary coolant system (PCS) <u>does not</u> have to be secured for a failed fueled experiment or for a fuel handling accident (FHA). The only required action for Operations personnel is to verify that the containment building has been evacuated following a containment building isolation, which will occur during both of these accidents. MURR performs an evacuation drill every year and the typical time for all personal to evacuate the containment building, including verification by Operations personnel, is two (2) to two and a half (2.5) minutes. For the purposes of the failed fueled experiment and FHA calculations, a conservative assumption of five (5) minutes is used for both accident scenarios. Additionally, verifying that the reactor has shut down and the containment building has isolated only takes a few moments – all control blade positions, and containment isolation valve and door indications are in clear view of the reactor operator in the control room.

The Derived Air Concentration (DAC) values used for the dose calculations for each accident scenario – MHA (Now Fuel Failure During Reactor Operation), FHA and fueled experiment failure – are now the same. For the isotopes "listed" in Appendix B of 10 CFR 20, those DACs are used

whereas for the "unlisted" isotopes the DACs of 10 CFR 835 are used (published in the Federal Register, 72 FR 31940, June 8, 2007, as amended) (Attachment 11).

b. *SAR Section 13.2.6.2 states that "Fueled experiments containing inventories of Iodine-131 through Iodine-135 greater than 1.5 curies or Strontium-90 greater than 5 millicuries shall be vented to the facility ventilation exhaust stack through high efficiency particulate air and charcoal filters which are continuously monitored for an increase in radiation levels." This is inconsistent with TS 3.8.o which states that a fueled experiment can be encapsulated or vented. Clarify whether fueled experiments are vented or not and revise the TS if required, or justify why no additional information is needed.*

License Amendment No. 34, issued to MURR on October 10, 2008, by the NRC, revised Technical current Specification (TS) 3.6.o (relicensing TS 3.8.o) such that fueled experiments containing inventories of iodine-131 (I-131) through I-135 greater than 1.5 curies or inventories of strontium-90 (Sr-90) greater than 5 millicuries can be encapsulated in irradiation containers designed to meet the internal pressure design requirements specified in TS 3.6.i. TS 3.6.i states that "Irradiation containers to be used in the reactor, in which static pressure will exist or in which a pressure buildup is predicted, shall be designed and tested for a pressure exceeding the maximum expected pressure by at least a factor of two (2)."

Until then, fueled experiments containing inventories of I-131 through I-135 greater than 1.5 curies or inventories of Sr-90 greater than 5 millicuries had to be vented to the facility ventilation exhaust stack through high efficiency particulate air (HEPA) and charcoal filters which were continuously monitored for radiation levels.

Since Amendment No. 34 was issued after the SAR was submitted in August 2006 as a part of relicensing, SAR Section 13.2.6.2 is now outdated. The third bullet on page 13-67 should now read, "Fueled experiments containing inventories of iodine-131 through iodine-135 greater than 1.5 curies or strontium-90 greater than 5 millicuries shall be in irradiation containers that satisfy the requirements of Specification 3.8.i or be vented to the facility ventilation exhaust stack through high efficiency particulate air (HEPA) and charcoal filters which are continuously monitored for an increase in radiation levels."

c. *If such venting is permitted then explain why those contributions are not included in the inventory of normally released material (such as Ar-41), or justify why no additional information is needed.*

As discussed in the responses to Questions 1.a, 1.b and 1.c, which are included in the responses, dated July 31, 2015, to a Request for Additional Information made by the NRC (by letter dated June 18, 2015), all air exiting the facility through the ventilation exhaust system is monitored for airborne radioactivity by the Off-Gas Radiation Monitoring System (also see SAR Section 7.9.5). This includes the exhaust from all hot cells, glove boxes, fume hoods, selected areas within the containment building and any experiment that is directly vented to the ventilation exhaust system.

Technical Specification 3.7 provides the Limiting Conditions for Operation (LCO) for the radiation monitoring systems and airborne effluents. As stated in Section B.1.2 of SAR Appendix B, Argon-41 (Ar-41) accounts for greater than 99 % of the radioactivity released from the facility through the ventilation exhaust system; therefore, Ar-41 was used to determine the radiological impact of airborne effluents during normal reactor operation. In addition to Ar-41, all other isotopes greater than 0.0001% of the limits of TS 3.7 are reported to the NRC annually as required by TS 6.6.e.(6), which states, "A summary of the nature and amount of radioactive effluents released or discharged to the environs beyond the effective control of the licensee as measured at or prior to the point of such release or discharge."

Attachment 13 (also included in the responses, dated July 31, 2015) provides the last 10 years, and average, of air releases from the facility per isotope in percentage of the Technical Specification limit. As you will note, with the exception of argon-41, all other isotopes discharged are less than 0.6% of the release limit.

***Revised* "Fueled Experiment Failure"**
(MURR's new Maximum Hypothetical Accident)

The release of the radioisotopes of krypton, xenon and iodine from a 5-gram low-enriched uranium (LEU) target is the major source of radiation exposure to an individual and will, therefore, serve as the basis for the source term for these dose calculations. A 5-gram LEU target irradiated for 150 hours (normal weekly operating cycle) at a thermal neutron flux of $1.5 \times 10^{+13}$ n/cm^2-sec will produce the following radioiodine, krypton and xenon activities (additionally, approximately $1.40 \times 10^{+04}$ μCi of Strontium-90 will be produced):

Radioiodine and Noble Gas Activities in a 5-Gram LEU Target

^{131}I – 8.400 Ci	^{85}Kr – 0.002 Ci	^{133}Xe – 18.900 Ci
^{132}I – 18.600 Ci	^{85m}Kr – 7.580 Ci	^{135}Xe – 13.600 Ci
^{133}I – 39.900 Ci	^{87}Kr – 15.400 Ci	^{135m}Xe – 6.760 Ci
^{134}I – 45.400 Ci	^{88}Kr – 21.700 Ci	^{137}Xe – 35.800 Ci
^{135}I – 37.700 Ci	^{89}Kr – 27.740 Ci	^{138}Xe – 37.400 Ci
	^{90}Kr – 27.400 Ci	^{139}Xe – 30.700 Ci
Total Iodine – 150.00 Ci	**Total Krypton – 99.822 Ci**	**Total Xenon – 143.160 Ci**

A complete failure of the target is unrealistic for many reasons. The worst that can be expected is partial melting; however, in order to present a worst-case dose assessment for an individual that remains in the containment building following target failure, 100% of the total activity of the target is assumed to be released into the reactor pool.

Fission products released into the reactor pool will be detected by the pool surface and ventilation system exhaust plenum radiation monitors. However, for the purposes of this analysis, it is assumed that a reactor scram and actuation of the containment building isolation system occurs by action of the pool surface radiation monitor. Actuation of the isolation system will prompt Operations personnel to ensure that a total evacuation of the containment building is accomplished promptly, usually within two (2) to two and a half (2.5) minutes. A conservative 5-minute evacuation time is used as the basis for the stay time in the dose calculations for personnel that are in containment during target failure.

The radioiodine released into the reactor pool over a 5-minute interval is conservatively assumed to be instantly and uniformly mixed into the 20,000 gallons (75,708 l) of bulk pool water, which then results in the following pool water concentrations for the radioiodine isotopes. The water solubility of the krypton and xenon noble gases released into the pool over this same time period are conservatively ignored and they are assumed to pass immediately through the pool water and evolve directly into the containment building air volume where they instantaneously form a uniform concentration in the isolated structure.

Radioiodine Concentrations in the Pool Water

^{131}I – $4.20 \times 10^{+02}$ μCi/gal	^{133}I – $2.00 \times 10^{+03}$ μCi/gal	^{135}I – $1.89 \times 10^{+03}$ μCi/gal
^{132}I – $9.30 \times 10^{+02}$ μCi/gal	^{134}I – $2.27 \times 10^{+03}$ μCi/gal	

When the reactor is at 10 MW and the containment building ventilation system is in operation, the evaporation rate from the reactor pool is approximately 80 gallons (302.8 L) of water per day. For the purposes of this calculation, it is assumed that a total of 20 gallons (75.7 L) of pool water containing the previously listed radioiodine concentrations evaporates into the containment building over the 5 minute period. Containment air with a temperature of 75 °F (23.9 °C) and 100% relative humidity contains H_2O vapor equal to 40 gallons (151.4 L) of water. Since the air in containment is normally at about 50% relative humidity, thus containing 20 gallons (75.7 L) of water vapor, the assumed addition of 20 gallons (75.7 L) of water vapor will not cause the containment air to be supersaturated. It is also conservatively assumed that all of the radioiodine activity in the 20 gallons (75.7 L) of pool water instantaneously forms a uniform concentration in the containment building air. When distributed into the containment building, this would result in the following radioiodine concentrations in the 225,000 ft^3 (6,371.3 m^3) air volume:

Example calculation of ^{131}I released into containment air:

$$= {}^{131}I \text{ concentration in pool water} \times 20 \text{ gal} \times 1/225{,}000 \text{ ft}^3 \times 35.3147 \text{ ft}^3/\text{m}^3$$
$$= 4.20 \times 10^{+02} \ \mu\text{Ci/gal} \times (3.14 \times 10^{-03} \text{ gal/m}^3)$$
$$= 1.32 \ \mu\text{Ci/m}^3$$

$$(1.32 \ \mu\text{Ci/m}^3) \times (1 \text{ m}^3/10^6 \text{ ml}) = 1.32 \times 10^{-06} \ \mu\text{Ci/ml}$$

Note: Same calculation is used for the other isotopes listed below.

The average radioiodine concentrations are the sum of the initial concentrations and the concentrations after 5 minutes decay divided by 2.

Average Radioiodine Concentrations in the Containment Building Air during the 5 Minutes

^{131}I – 1.32×10^{-06} μCi/ml	^{133}I – 6.26×10^{-06} μCi/ml	^{135}I – 5.89×10^{-06} μCi/ml
^{132}I – 2.88×10^{-06} μCi/ml	^{134}I – 6.90×10^{-06} μCi/ml	

As noted previously, the krypton and xenon noble gases released into the reactor pool from the 5-gram LEU target during the 5-minute interval following failure, are assumed to pass immediately through the pool water and enter the containment building air volume where they instantaneously form a uniform concentration in the isolated structure. Based on the 225,000-ft^3 volume of containment building air, and the previously listed curie quantities of these gases released into the reactor pool, the maximum noble gas concentrations in the containment structure at the end of 5 minutes would be as follows:

Example calculation of ^{85}Kr released into containment air:

$$= {}^{85}Kr \text{ activity} \times 1/225{,}000\ ft^3 \times 35.3147\ ft^3/m^3$$
$$= 1.71 \times 10^{+03}\ \mu Ci \times (1.60 \times 10^{-04}\ 1/m^3)$$
$$= 2.69 \times 10^{-01}\ \mu Ci/m^3$$

$$(2.69 \times 10^{-01}\ \mu Ci/m^3) \times (1\ m^3/10^6\ ml) = 2.69 \times 10^{-07}\ \mu Ci/ml$$

Note: Same calculation is used for the other isotopes listed below.

The average noble gas concentrations are the sum of the initial concentrations and the concentrations after 5 minutes decay divided by 2.

Average Noble Gas Concentrations in the Containment Building Air during the 5 Minutes

Kr – 2.69×10^{-07} µCi/ml	^{133}Xe – 2.97×10^{-03} µCi/ml
^{85m}Kr – 1.18×10^{-03} µCi/ml	^{135}Xe – 2.13×10^{-03} µCi/ml
^{87}Kr – 2.36×10^{-03} µCi/ml	^{135m}Xe – 9.54×10^{-04} µCi/ml
^{88}Kr – 3.37×10^{-03} µCi/ml	^{137}Xe – 3.95×10^{-03} µCi/ml
^{89}Kr – 2.90×10^{-03} µCi/ml	^{138}Xe – 5.23×10^{-03} µCi/ml
^{90}Kr – 2.15×10^{-03} µCi/ml	^{139}Xe – 2.42×10^{-03} µCi/ml

The objective of this calculation is to present a worst-case dose assessment for an individual who remains in the containment building for 5 minutes following target failure. Therefore, as noted previously, the radioactivity in the evaporated pool water is assumed to be instantaneously and uniformly distributed into the building once released into the air.

Based on the source term data provided, it is possible to determine the radiation dose to the thyroid from radioiodine and the dose to the whole body resulting from submersion in the airborne noble gases and radioiodine inside the containment building.

Because the airborne radioiodine source is composed of five different iodine isotopes, it will be necessary to determine the dose contribution from each individual isotope and to then sum the results. Dose multiplication factors were established using the Derived Air Concentrations (DACs) for the "listed" isotopes in Appendix B of 10 CFR 20 and Appendix C of 10 CFR 835 for the "unlisted" submersion isotopes, and the radionuclide concentrations in the containment building (Attachment 11).

Example calculation of thyroid dose due to ^{131}I:

The DAC can also be defined as 50,000 mrem (thyroid target organ limit)/2,000 hrs, or 25 mrem/DAC-hr. Additionally, 5 minutes of one DAC-hr is 8.33×10^{-02} DAC-hr.

^{131}I concentration in containment = 1.32×10^{-06} µCi/ml
^{131}I DAC (10 CFR 20) = 2.00×10^{-08} µCi/ml

Dose Multiplication Factor	=	(^{131}I concentration) / (^{131}I DAC)
	=	(1.32×10^{-06} µCi/ml) / (2.00×10^{-08} µCi/ml)
	=	66

Therefore, a 5-minute thyroid exposure from ^{131}I is:

= Dose Multiplication Factor x DAC Dose Rate x 5 minutes of a DAC-hr
= 66 x (25 mrem/DAC-hr) x (8.33×10^{-02} DAC-hr)
= $1.37 \times 10^{+02}$ mrem

Note: Same calculation is used for the other radioiodines listed below.

Derived Air Concentration Values and 5-Minute Exposures – Radioiodine

Radionuclide	Derived Air Concentration	5-Minute Exposure
^{131}I	2.00×10^{-08} µCi/ml	$1.37 \times 10^{+02}$ mrem
^{132}I	3.00×10^{-06} µCi/ml	$2.00 \times 10^{+00}$ mrem
^{133}I	1.00×10^{-07} µCi/ml	$1.30 \times 10^{+02}$ mrem
^{134}I	2.00×10^{-05} µCi/ml	7.18×10^{-01} mrem
^{135}I	7.00×10^{-07} µCi/ml	$1.75 \times 10^{+01}$ mrem
		Total = 287.80 mrem

Doses from the kryptons and xenons present in the containment building are assessed in much the same manner as the radioiodines, and the dose contribution from each individual radionuclide must be calculated and then added together to arrive at the final noble gas dose. Because the dose from the noble gases is only an external dose due to submersion, and because the DACs for these radionuclides are based on this type of exposure, the individual noble gas doses for 5 minutes in containment were based on their average concentration in the containment air and the corresponding DAC.

Example calculation of whole body dose due to ^{85}Kr:

The DAC can also be defined as 5,000 mrem/2,000 hrs, or 2.5 mrem/DAC-hr. Additionally, 5 minutes of one DAC-hr is 8.33×10^{-02} DAC-hr.

^{85}Kr concentration in containment	=	2.69×10^{-07} µCi/ml
^{85}Kr DAC (10 CFR 20)	=	1.00×10^{-04} µCi/ml
Dose Multiplication Factor	=	(^{85}Kr concentration) / (^{85}Kr DAC)
	=	(2.69×10^{-07} µCi/ml) / (1.00×10^{-04} µCi/ml)
	=	0.00269

Therefore, a 5 minute whole body exposure from ^{85}Kr is:

= Dose Multiplication Factor x DAC Dose Rate x 5 minutes of a DAC-hr
= 0.00269 x (2.5 mrem/DAC-hr) x (8.33×10^{-02} DAC-hr)

$= 5.59 \times 10^{-04}$ mrem

Note: Same calculation is used for the other noble gases listed below.

Derived Air Concentration Values and 5-Minute Exposures – Noble Gases

Radionuclide	Derived Air Concentration	5-Minute Exposure
^{85}Kr	1.00×10^{-04} µCi/ml	5.59×10^{-04} mrem
^{85m}Kr	2.00×10^{-05} µCi/ml	$1.23 \times 10^{+01}$ mrem
^{87}Kr	5.00×10^{-06} µCi/ml	$9.85 \times 10^{+01}$ mrem
^{88}Kr	2.00×10^{-06} µCi/ml	$3.51 \times 10^{+02}$ mrem
^{89}Kr	6.00×10^{-06} µCi/ml	$1.01 \times 10^{+02}$ mrem
^{90}Kr	6.00×10^{-06} µCi/ml	$7.48 \times 10^{+01}$ mrem
^{133}Xe	1.00×10^{-04} µCi/ml	$6.18 \times 10^{+00}$ mrem
^{135}Xe	1.00×10^{-05} µCi/ml	$4.43 \times 10^{+01}$ mrem
^{135m}Xe	9.00×10^{-06} µCi/ml	$2.21 \times 10^{+01}$ mrem
^{137}Xe	6.00×10^{-06} µCi/ml	$1.37 \times 10^{+02}$ mrem
^{138}Xe	4.00×10^{-06} µCi/ml	$2.72 \times 10^{+02}$ mrem
^{139}Xe	6.00×10^{-06} µCi/ml	$8.41 \times 10^{+01}$ mrem
		Total = 1203.80 mrem

To finalize the occupational dose in terms of Total Effective Dose Equivalent (TEDE) for a 5-minute exposure in the containment building after target failure, the doses from the radioiodines and noble gases must be added together, and result in the following values:

5-Minute Dose from Radioidines and Noble Gases in the Containment Building

Committed Dose Equivalent (Thyroid)	**287.80 mrem**
Committed Effective Dose Equivalent (Thyroid)	**8.63 mrem**
Committed Effective Dose Equivalent (Noble Gases)	**1203.80 mrem**
Total Effective Dose Equivalent (Whole Body)	**1212.44 mrem**

Note: The addition of Strontium-90 (^{90}Sr) will increase the above stated TEDE (whole body) by 9.15 mrem (<1%).

By comparison of the maximum TEDE and Committed Dose Equivalent (CDE) for those occupationally-exposed during target failure to applicable NRC dose limits in 10 CFR 20, the final values are shown to be well within the published regulatory limits and, in fact, lower than 25% of any occupational limit.

Radiation shine through the containment structure was also evaluated when considering accident conditions and dose consequences to the public and MURR staff. Calculation of exposure rate from the target failure was performed using the computer program MicroShield 8.02 with a

Rectangular Volume – External Dose Point geometry for the representation of the containment structure (Attachment 12). MicroShield 8.02 is a product of Grove. Software and is a comprehensive photon/gamma ray shielding and dose assessment program that is widely used by industry for designing radiation shields.

The exposure rate values provided below represents the radiation fields at 1 foot (30.5 cm) from a 12-inch thick ordinary concrete containment wall and at the Emergency Planning Zone (EPZ) boundary of 150 meters (492.1 ft). The airborne concentration source terms used to develop the exposure rate values are identical to those used for determining the dose to a worker within containment from noble gases. For radioiodine, the total iodine activity of the target was used for the dose calculations, not the amount that evaporated in 5 minutes. The source term also assumes a homogenous mixture of nuclides within the containment free volume.

Radiation Shine through the Containment Building

Exposure Rate at 1-Foot from Containment Building Wall:	**68.87 mrem/hr**
Exposure Rate at Emergency Planning Zone Boundary (150 meters):	**0.467 mrem/hr**

A confirmatory analysis of the accident condition yielding the largest consequence was validated independently by the use of the MCNP code. This analysis yielded a result 21% less than the Microshield method and results provided above.

As noted earlier in this analysis, the containment building ventilation system will shut down and the building itself will be isolated from the surrounding areas. Target failure will not cause an increase in pressure inside the reactor containment structure; therefore, any air leakage from the building will occur as a result of normal changes in atmospheric pressure and pressure equilibrium between the inside of the containment structure and the outside atmosphere. It is highly probable that there will be no pressure differential between the inside of the containment building and the outside atmosphere, and consequently there will be no air leakage from the building and no radiation dose to members of the public in the unrestricted area. However, to develop what would clearly be a worst-case scenario, this analysis assumes that a barometric pressure change had occurred in conjunction with the target failure. A reasonable assumption would be a pressure change on the order of 0.7 inches of Hg (25.4 mm of Hg at 60 °C), which would then create a pressure differential of about 0.33 psig (2.28 kPa above atmosphere) between the inside of the isolated containment building and the inside of the adjacent laboratory building, which surrounds most of the containment structure. Making the conservative assumption that the containment building will leak at the Technical Specification leakage rate limit [10% of the contained volume over a 24-hour period from an initial overpressure of 2.0 psig (13.8 kPa above atmosphere)], the air leakage from the containment structure in standard cubic feet per minute (scfm) as a function of containment pressure can be expressed by the following equation:

$$LR = 17.85 \times (CP-14.7)^{1/2};$$

where:

LR = leakage rate from containment (scfm); and
CP = containment pressure (psia).

The minimum Technical Specification free volume of the containment building is 225,000-ft^3 at standard temperature and pressure. At an initial overpressure of 2.0 psig (13.8 kPa above atmosphere), the containment structure would hold approximately 255,612 standard cubic feet (scf) of air. A loss of 10%, from this initial overpressure condition, would result in a decrease in air volume to 230,051 scf. The above equation describes the leakage rate that results in this drop of contained air volume over 1,440 minutes (24 hours).

When applying the Technical Specification leakage rate equation to the assumed initial overpressure condition of 0.33 psig (2.28 kPa above atmosphere), it would take approximately 16.5 hours for the leak rate to decrease to zero from an initial leakage rate of approximately 10.3 scfm, which would occur at the start of the event. The average leakage rate over the 16.5-hour period would be about 5.2 scfm.

Several factors exist that will mitigate the radiological impact of any air leakage from the containment building following target failure. First of all, most leakage pathways from containment discharge into the reactor laboratory building, which surrounds the containment structure. Since the laboratory building ventilation system continues to operate during target failure, leakage air captured by the ventilation exhaust system is mixed with other building air, and then discharged from the facility through the exhaust stack at a rate of approximately 30,500 cfm. Mixing of containment air leakage with the laboratory building ventilation flow, followed by discharge out the exhaust stack and subsequent atmospheric dispersion, results in extremely low radionuclide concentrations and very small radiation doses in the unrestricted area. A tabulation of these concentrations and doses is given below. These values were calculated following the same methodology stated in Section 5.3.3 of Addendum 3 to the MURR Hazards Summary Report [1].

A second factor which helps to reduce the potential radiation dose in the unrestricted area relates to the behavior of radioiodine, which has been studied extensively in the containment mockup facility at Oak Ridge National Laboratory (ORNL). From these experiments, it was shown that up to 75% of the iodine released will be deposited in the containment vessel [2]. If, due to this 75% iodine deposition in the containment building, each cubic meter of air released from containment has a radioiodine concentration that is 25% of each cubic meter within containment building air, then the radioiodine concentrations leaking from the containment structure into the laboratory building, in microcuries per milliliter, will be:

Example calculation of ^{131}I released through the exhaust stack:

$$= {}^{131}I \text{ activity} / (30{,}500\ ft^3/min \times 16.5\ hr \times 60\ min/hr \times 28{,}300\ ml/ft^3)$$
$$= 8.40 \times 10^{+06}\ \mu Ci / 8.55 \times 10^{+11}\ ml$$
$$= 9.83 \times 10^{-06}\ \mu Ci/ml$$

$$(9.83 \times 10^{-06}\ \mu Ci/ml) \times (0.25) = 2.46 \times 10^{-06}\ \mu Ci/ml$$

Note: Same calculation is used for the other radioiodines listed below.

Radioiodine Concentrations in Air Leaking from Containment and Exiting the Exhaust Stack

^{131}I – 2.46×10^{-06} µCi/ml	^{133}I – 1.17×10^{-05} µCi/ml	^{135}I – 1.10×10^{-05} µCi/ml
^{132}I – 5.44×10^{-06} µCi/ml	^{134}I – 1.33×10^{-05} µCi/ml	

Example calculation of ^{85}Kr released through the exhaust stack:

= ^{85}Kr activity / (30,500 ft^3/min x 16.5 hr x 60 min/hr x 28,300 ml/ft^3)
= $1.71 \times 10^{+03}$ µCi / $8.55 \times 10^{+11}$ ml
= 2.00×10^{-09} µCi/ml

Note: Same calculation is used for the other noble gases listed below.

Noble Gas Concentrations in Air Leaking from Containment and Exiting the Exhaust Stack

^{85}Kr – 2.00×10^{-09} µCi/ml	^{87}Kr – 1.80×10^{-05} µCi/ml	^{89}Kr – 3.25×10^{-05} µCi/ml
^{85m}Kr – 8.87×10^{-06} µCi/ml	^{88}Kr – 2.54×10^{-05} µCi/ml	^{90}Kr – 3.21×10^{-05} µCi/ml
^{133}Xe – 2.21×10^{-05} µCi/ml	^{135m}Xe – 7.91×10^{-06} µCi/ml	^{138}Xe – 4.38×10^{-05} µCi/ml
^{135}Xe – 1.59×10^{-05} µCi/ml	^{137}Xe – 4.19×10^{-05} µCi/ml	^{139}Xe – 3.59×10^{-05} µCi/ml

Assuming, as stated earlier, that (1) the average leakage rate from the containment building is 5.2 scfm, (2) the leak continues for about 16.5 hours in order to equalize the containment building pressure with atmospheric pressure, (3) the flow rate through the facility's ventilation exhaust stack is 30,500 scfm, (4) the reduction in concentration from the point of discharge at the exhaust stack to the point of maximum concentration in the unrestricted area is a factor of 292 and (5) there is no decay of any radioiodines or noble gases, then the following concentrations of radioiodines and noble gases with their corresponding radiation doses will occur in the unrestricted area. The values listed are for the point of maximum concentration in the unrestricted area assuming a uniform, semi-spherical cloud geometry for noble gas submersion and further assuming that the most conservative (worst-case) meteorological conditions exist for the entire 16.5-hour period of containment leakage following target failure. Radiation doses are calculated for the entire 16.5-hour period. Dose values for the unrestricted area were obtained using the same methodology that was used to determine doses inside the containment building, and it was assumed that an individual was present at the point of maximum concentration for the full 16.5 hours that the containment building was leaking.

A worst-case scenario dilution factor of 292 for effluent dilution using the Pasquill-Guifford Model for atmospheric dilution is used in this analysis. We assume that all offsite (public) dose occurs under these atmospheric conditions at the site of interest, i.e. 760 meters North of MURR. In our case at 760 meters it occurs only during Stability Class F conditions; which normally only occur 11.4% of the time when the wind blows from the south. Thus this calculation is conservative.

10 CFR 20 Appendix B Effluent Concentration Limits are used for the "listed" isotopes. An Effluent Concentration Limit of 2.0×10^{-08} μCi/ml is used for the "unlisted" isotopes, which equals the DAC/300 when using the DOE Part 835 Default DAC limits of 6.0×10^{-06} μC/ml. Exposure at 1 DAC gives 5000 mrem per year whereas at the effluent concentration limit it is 50 mrem per year. This is a factor of 100 times less for the effluent concentration limit as compared to the DAC. Exposure at the effluent concentration limit assumes you are in that effluent concentration for 8760 hours per year. Thus, the time assumed to be exposed to the effluent concentration limit is a factor of 4.38 longer than the 2000 hours per year that defines a DAC. The isotopes in question are based on a default DAC limit of 6.0×10^{-06} μCi/ml for short-lived (< 2 hour half-lives) submersion DAC's in Appendix C of Part 835. No credit is taken for transit time from the stack to the receptor point nor is credit taken for decay inside containment until release. In the case of Kr-89 and Xe-137 the transit time alone would be approximately one (1) half-life while the transit time for Kr-90 and Xe-139 would be at least four (4) half-lives. Thus we believe that a factor of 300 reduction below the DAC value to establish the effluent concentration limit is warranted. This reduction factor of 300 is consistent, in fact more conservative, than 10 CFR 20 Appendix B, as the NRC calculates Effluent Concentration Limits for Submersion isotopes by dividing the DAC value by 219.

Example calculation of whole body dose in the unrestricted area due to ^{131}I:

Conversion Factor: (Public dose limit of 50 mrem/yr) x (1 yr/8760 hours) = 5.71×10^{-03} mrem/hr

^{131}I concentration	=	8.42×10^{-09} μCi/ml
^{131}I effluent concentration limit	=	2.00×10^{-10} μCi/ml
^{131}I Conversion Factor	=	5.71×10^{-03} mrem/hr

Therefore, a 16.5-hour whole body exposure from ^{131}I is:

= ^{131}I concentration / (^{131}I effluent concentration limit x Conversion Factor x 16.5 hrs)
= 8.42×10^{-09} μCi/ml / (2.00×10^{-10} μCi/ml x 5.71×10^{-03} mrem/hr x 16.5 hrs)
= $3.96 \times 10^{+00}$ mrem

Note: Same calculation is used for the other isotopes (radioiodines and noble gases) listed below.

Effluent Concentration Limits, Concentrations at Point of Maximum Concentration and Radiation Doses in the Unrestricted Area – Radioiodine

Radionuclide	Effluent Limit	Maximum Concentration[1]	Radiation Dose
^{131}I	2.00×10^{-10} µCi/ml	8.42×10^{-09} µCi/ml	$3.96 \times 10^{+00}$ mrem
^{132}I	2.00×10^{-08} µCi/ml	1.86×10^{-08} µCi/ml	8.78×10^{-02} mrem
^{133}I	1.00×10^{-09} µCi/ml	4.00×10^{-08} µCi/ml	$3.77 \times 10^{+00}$ mrem
^{134}I	6.00×10^{-08} µCi/ml	4.55×10^{-08} µCi/ml	7.14×10^{-02} mrem
^{135}I	6.00×10^{-09} µCi/ml	3.78×10^{-08} µCi/ml	5.93×10^{-01} mrem
			Total = 8.48 mrem

Note 1: Maximum Concentrations are radioiodine and noble gas concentrations leaking from the containment building and exiting the exhaust stack reduced by a dilution factor of 292.

Effluent Concentration Limits, Concentrations at Point of Maximum Concentration and Radiation Doses in the Unrestricted Area – Noble Gases

Radionuclide	Effluent Limit	Maximum Concentration[1]	Radiation Dose
^{85}Kr	7.00×10^{-07} µCi/ml	6.85×10^{-12} µCi/ml	9.22×10^{-07} mrem
^{85m}Kr	1.00×10^{-07} µCi/ml	3.04×10^{-08} µCi/ml	2.86×10^{-02} mrem
^{87}Kr	2.00×10^{-08} µCi/ml	6.17×10^{-08} µCi/ml	2.91×10^{-01} mrem
^{88}Kr	9.00×10^{-09} µCi/ml	8.70×10^{-08} µCi/ml	9.10×10^{-01} mrem
^{89}Kr	2.00×10^{-08} µCi/ml	1.11×10^{-07} µCi/ml	5.24×10^{-01} mrem
^{90}Kr	2.00×10^{-08} µCi/ml	1.10×10^{-07} µCi/ml	5.17×10^{-01} mrem
^{133}Xe	5.00×10^{-07} µCi/ml	7.57×10^{-08} µCi/ml	1.43×10^{-02} mrem
^{135}Xe	7.00×10^{-08} µCi/ml	5.45×10^{-08} µCi/ml	7.34×10^{-02} mrem
^{135m}Xe	4.00×10^{-08} µCi/ml	2.71×10^{-08} µCi/ml	6.38×10^{-02} mrem
^{137}Xe	2.00×10^{-08} µCi/ml	1.43×10^{-07} µCi/ml	6.76×10^{-01} mrem
^{138}Xe	2.00×10^{-08} µCi/ml	1.50×10^{-07} µCi/ml	7.06×10^{-01} mrem
^{139}Xe	2.00×10^{-08} µCi/ml	1.23×10^{-07} µCi/ml	5.80×10^{-01} mrem
			Total = 4.38 mrem

Note 1: Maximum Concentrations are radioiodine and noble gas concentrations leaking from the containment building and exiting the exhaust stack reduced by a dilution factor of 292.

To finalize the unrestricted dose in terms of Total Effective Dose Equivalent (TEDE), the doses from the radioiodines and noble gases must be added together, and result in the following values:

Dose from Radioidines and Noble Gases in the Unrestricted Area

Committed Effective Dose Equivalent (Radioiodine)	**8.48 mrem**
Committed Effective Dose Equivalent (Noble Gases)	**4.38 mrem**
Total Effective Dose Equivalent (Whole Body)	**12.87 mrem**

Summing the doses from the noble gases and the radioiodines simply substantiates earlier statements regarding the very low levels in the unrestricted area should a failure of a fueled experiment occur, and should the containment building leak following such an event. Because the dose values are so low, the dose from the noble gases becomes the dominant value, but the overall TEDE is still only 12.87 mrem, a value far below the applicable 10 CFR 20 regulatory limit for the unrestricted area.

References:

[1]Hazards Summary Report, Addendum 3, Section 5.3.3, University of Missouri Research Reactor Facility, August 1972 (as revised by the 1989-1990 Operations Annual Report).

[2]Hazards Summary Report, Addendum 4, Appendix C, University of Missouri Research Reactor Facility, October 1973.

ATTACHMENT 1

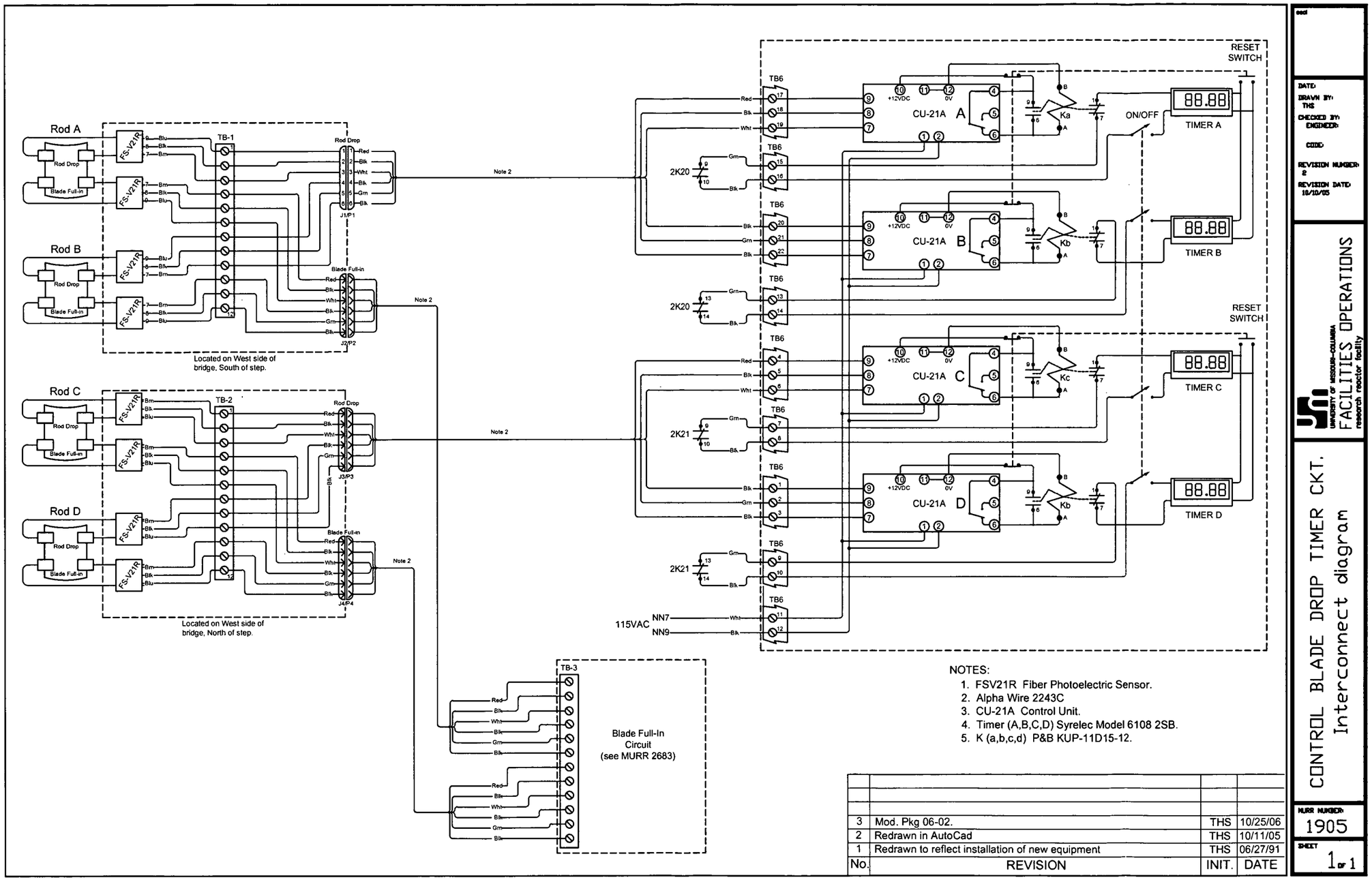

NOTES:

1. FSV21R Fiber Photoelectric Sensor.
2. Alpha Wire 2243C
3. CU-21A Control Unit.
4. Timer (A,B,C,D) Syrelec Model 6108 2SB.
5. K (a,b,c,d) P&B KUP-11D15-12.

No.	REVISION	INIT.	DATE
3	Mod. Pkg 06-02.	THS	10/25/06
2	Redrawn in AutoCad	THS	10/11/05
1	Redrawn to reflect installation of new equipment	THS	06/27/91

DATE:
DRAWN BY: THS
CHECKED BY: ENGINEER:
CODE:
REVISION NUMBER: 2
REVISION DATE: 10/10/05

UNIVERSITY OF MISSOURI–COLUMBIA
FACILITIES OPERATIONS
research reactor facility

CONTROL BLADE DROP TIMER CKT.
Interconnect diagram

MURR NUMBER: 1905

SHEET 1 of 1

ATTACHMENT 2

COPY

MODIFICATION RECORD

Modification Number 72-7 Page 1

Modification Title Additional In-Pool Fuel Storage Basket

Page Number	Page Title	Required Yes	Required No	Date Completed	By
1	Modification Record	x		10/16/73	[illegible]
2	System Proposal (including a detailed hazards analysis)	x		1-14-72	CJ
3	Crew Evaluation	x		NA	[illegible]
4	Safety Evaluation (OSHA)	x		2-11-73	[illegible]
5	Safety Subcommittee Review	x		2-1-72	CJ
6	Reactor Advisory Committee Review		x	—	—
7	AEC Review		x	—	—

Modification Approved [signature] Reactor Supervisor 10/17/73 Date

		Yes	No	Date	By
8	Parts Requirement	x	X	—	—
9	Installation Record	x	x	—	—
10	Blueprints, spare parts, tech manuals	x		10/15/73	[illegible]
11	Pre-op test	x		—	—
12	SOP changes	x		1-26-73	[illegible]
13	Compliance checks and PM's		x	—	—
14	MH cards	x		9-6-72	[illegible]

Modification Completed [signature] Reactor Supervisor 10/17/73 Date

COPY

Analysis of an Auxiliary Spent Fuel Storage Rack in the MURR Pool

The Missouri University Research Reactor (MURR) has as a part of its pool a deep pit with two storage racks capable of holding sixteen spent fuel elements or two full core loadings. This is inadequate for the present MURR fuel cycle and with the advent of 10 megawatt operation, the situation will be even worse. It is proposed that an additional eight element rack be installed between the existing two. Figure 1 is a sketch depicting a top view of proposed configuration. The existing two racks are hung from the pool wall along with their respective gamma shields. So as not to stress these supports further, it is proposed that the auxiliary rack have an integral stand to support it 2 feet off the pool floor and level with the existing racks. The new rack will attach to the present ten element rack by brackets that engage underneath as shown in Figure 1. The rack is essentially self-supporting but this attachment will lend extra stability. The fully loaded rack will weigh approximately 300 pounds and will be supported by the pool floor.

Since the existing racks have 1/4" boral on each side, it will only be necessary to place short boral dividers between the elements in the new rack to insure that each element is separated from every other by boral. To determine the safety of installing an additional fuel rack between the present two, the system was modeled using the Exterminator II multi-group neutron diffusion program. The physical model consisted of three adjacent rows of eight clean 775 gram U^{235} fuel elements. Each element was surrounded by 0.25" thick boral as is the case in the actual design. For the fully loaded rack, the calculated K_{eff} limit was 0.714. This is well within the maximum K_{eff} limit of 0.8 presented in the MURR license R-103. Thus the fully loaded rack will be far subcritical.

Figure 1

Proposed Fuel Storage Rack Configuration

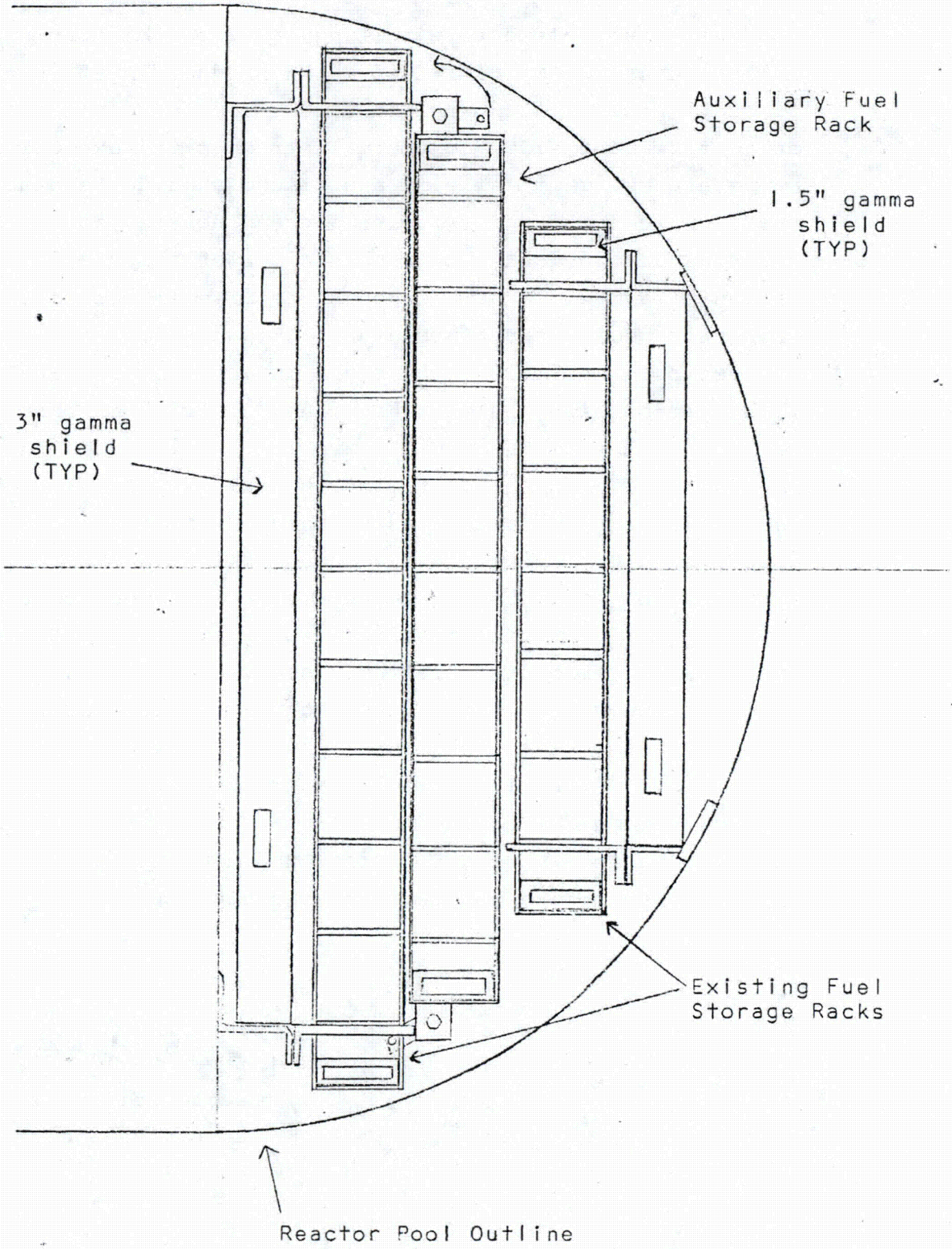

Scale: 1/8"=1"

Spent fuel elements with long operating history emit intense decay gamma radiation which produces heat in the concrete pool walls when attenuated. To prevent the concrete from damage due to thermal stresses and excessive temperatures, gamma shields are placed around the storage racks between the spent fuel and the concrete pool walls. The MURR design data establishes a conservative safety criterion of a maximum 30°F temperature rise in the concrete wall from pool water temperature. Figure 1 indicates that to meet this criterion, the racks as constructed have 3-inch thick gamma shields along the sides and 1.5-inch shields on each end. The new rack will have similar 1.5-inch thick shields on each end and utilize the existing side shields. This modification represents no change from the present situation, in that despite the presence of eight additional spent elements in the storage rack area, the strongest contribution to the gamma radiation field will be from the eight elements with the most recent operating history. For example, a spent fuel element with several days decay after its last operation represents less than 10% of the decay gammas that an adjacent element will emit with only two hours decay.

Thus it may be concluded that the proposed auxiliary fuel rack may be safely used to extend the MURR spent fuel storage capabilities by one complete core loading.

Caudle Julian

Caudle Julian
Reactor Physicist

ATTACHMENT 2

Safety Evaluation
(non-nuclear)

Modification Number 72-7 Page 4-A

This modification must be approved by the plant safety coordinator. If not approved, state reasons for disapproval and/or areas of non-compliance with OSHA 1910.

Approved ✓ Disapproved _____ A.J. Germ 2-12-73
Plant Safety Coordinator Date

ATTACHMENT 2

Reactor Safety Subcommittee

Minutes of Meeting of February 1, 1972

Members present: Partain, Jacovitch, Kuntz, Marriott, Slivinsky

Also present: Alger, Julian

The meeting was called to order at 1:35 p.m. by Dr. Partain. The minutes were accepted as read. Mr. Alger reported that the test annunciator circuit approved at the December 15, 1971 meeting had not been installed since the reason for prior reactor scrams had been located in a faulty relay. It will be used to locate sites of future scrams. Also, it was reported that the stainless steel fuel tank has been installed.

Reactor utilization request 191 was discussed by Mr. Alger and Mr. Julian. The committee considered sample cooling, reactivity worth of the sample and thermal effects on the spring in the container. The following recommendations were made:

1. Calculations of the reactivity worth of the sample be made to assure it is in compliance with license limits.

2. Calculations of thermal effects be made on spring in sample container.

3. A temperature monitor be used on outer wall of container in initial irradiations to verify calculations. Further recommendations will be based on these results.

4. A preliminary week-long experiment in a low flux position after which the container is opened and examined for damage.

5. A fission product monitoring system for pool water be considered if this type of experiment becomes routine.

The request was approved with these modifications.

Mr. Julian presented plans for a new fuel storage rack in the reactor pool to handle increased spent fuel elements expected when 10 MW operation is in effect. These were approved.

Meeting adjourned at 2:45 p.m.

Robert R. Kuntz

Robert R. Kuntz
Secretary

ATTACHMENT 2

Parts Requirement Sheet

Modification Number 72-7 Page 8-A

Qty.	Part Description	Part No.	Purchase Order No.	Date Received

Purchase Order No. _____
Ordered from _____
_____
_____
Date _____

Purchase Order No. _____
Ordered from _____
_____
_____
Date _____

Purchase Order No. _____
Ordered from _____
_____
_____
Date _____

Purchase Order No. _____
Ordered from _____
_____
_____
Date _____

ATTACHMENT 2

Installation Record

Modification Number 72-7

Page 9-A

Date	Description of Work Accomplished	Percent Completed

ATTACHMENT 2

Blueprints
Spare Parts
Tech Manuals

Modification Number 72-7

Page 10- A

Print No.	Print Title	New Print	Rev. of Old Print	Rev. No.	Date
1011	New Z Basket	X			1-4-73
~~[illegible]~~	~~Reactor Assembly Arrangement~~		~~X~~	NA	
[illegible]			[illegible]		
[illegible]			[illegible]		

Qty	Part Description	Part No.	Purchase Order No.	SP No.	Date
NA	NA	NA	NA	NA	NA

Purchase Order No. NA
Ordered from
Date

Purchase Order No. NA
Ordered from
Date

Purchase Order NO. NA
Ordered from
Date

Purchase Order No. NA
Ordered from
Date

Manual Title	Ordered from	Date Ordered	Date Rec'd	Manual No.
NA	NA	NA	NA	NA

PROCEDURE FOR Z BASKET MULTIPLICATION MEASUREMENT

1. Scan new baskets with source and a detector to insure boral plate composition.

2. Install source, two detectors, and thermocouples as directed by reactor physicist.

3. Defuel reactor as per refueling procedure. Wait for evaluation of 1/M before transfer of each element.

4. After all elements are transferred, remove all detectors. After the pool level is returned to normal, store the source in the deep pool (tag rope).

5. A K_{eff} = 0.8 shall not be exceeded.

Gerald Schlapper

Gerald Schlapper
Reactor Physicist

Approved

D. M. Alger

D. M. Alger
Reactor Supervisor

UNIVERSITY OF MISSOURI
ATTACHMENT 2
COLUMBIA • KANSAS CITY • ROLLA • ST. LOUIS

File
Page 11-B

INTER-DEPARTMENT CORRESPONDENCE

February 27, 1973

TO Don Alger

SUBJECT Z-Basket Subcriticality Measurement

On February 23, 1973 an experiment was conducted to determine the degree of subcriticality of the new Z-basket configuration of twenty-four 775-gram elements. An Exterminator code calculation implied a k_{eff} of 0.71 for this configuration.

Before any fuel was transferred to the new baskets, the plates were scanned to insure boral composition. As the elements were transferred, a 1/M plot was drawn. The 1/M data indicates that the new Z-basket configuration is far subcritical.

Gerald Schlapper

Gerald Schlapper
Reactor Physicist

kp

ATTACHMENT 2

SOP Changes

Modification Number 72-7 Page 12- A.

For each change cite volume, section, part, and paragraph. Include a copy of each change.

change 1	There are also twenty-four long-term storage racks in the east end of the weir	Vol I VII.2.1(2)

ATTACHMENT 2

MH Cards

Modification Number 72-7 Page 14- A

Complete the following data for the system and each major component.

Item middle Z fuel storage basket Serial Number Na

Manufacturer MV U. of Mo. No.

Ref. Dwg. and Manual No. 159, 160, 1011

Specs NA already covered by existing cards

Date Incorporated into System NA Card No. R-48 and RA-170

Item Serial Number

Manufacturer U. of Mo. No.

Ref. Dwg. and Manual No.

Specs

Date Incorporated into System Card No.

Item Serial Number

Manufacturer U. of Mo. No.

Ref. Dwg. and Manual No.

Specs

Date Incorporated into System Card No.

Item Serial Number

Manufacturer U. of Mo. No.

Ref. Dwg. and Manual No.

Specs

Date Incorporated into System Card No.

ATTACHMENT 3

COPY

MODIFICATION RECORD

Modification Number 76-3

Page 1

Modification Upper Z spent fuel storage

Page No.	Page Title	Required Yes	Required No	Date Completed	By
1.	Modification Record	x		4/26/76	CBE
2.	System Proposal	x		4/5/76	CBE
3.	Preop Test Procedures	x		4/5/76	CBE
4.	Reactor Safety Evaluation	x		4/5/76	CBE
5.	Crew Evaluation	x		4/6/76	CBE
6.	Safety Subcommittee Review	X		4/8/76	CBE
7.	Reactor Advisory Committee Review		X	2/26/76	CBE
8.	AEC Review		X	2/26/76	CBE

Modification Approved Candle Julian — Reactor Manager

7/15/76 — Date

Date of Completion 8/20/76

Modification Completed Candle Julian — Reactor Manager

Form Revised
10-31-75

ATTACHMENT 3

Mod 76-3 Spent Fuel Storage

The present spent fuel storage for MURR is capable of storing 36 elements, 6 in each of the X and Y baskets and 24 in the Z fuel storage. Operation of the reactor with the present fuel cycle plus the 120 day decay time per element before shipment causes the fuel inventory to exceed this capacity. The criteria for determining what the capacity should be is based on projections of inventories such that at least 8 spaces will always be available to defuel the core

Proposal:

Install a 14 element storage basket located in the Z fuel storage area behind the weir. This will be accomplished by the installation of a permanent support stand located above the existing baskets, which rests on the weir floor. The stand is spaced to permit the same access to the existing fuel storage baskets. The support stand will provide the vertical guides for the side lead shields (MURR Print #1170) and will contain lead shields at the end of each row. The side lead shield will rest on top of the existing stainless steel shields used for the lower storage baskets. The fuel basket cradles in a resting pocket which has guide pins mounted on the stand for positioning. The basket is then secured to the stand by a threaded bolt at each end.

Weight Considerations:

The existing fuel baskets and stainless steel shields hang on brackets mounted on the pool liner wall of the spent fuel storage. Each bracket is design rated to carry a vertical load of 2,000 lbs. The large shield and ten element storage basket has three (3) brackets for a total capacity of 6,000 lbs. The large stainless steel shield and ten element basket loaded with elements have a total weight of 1,826 lbs. The added lead shield for the proposed storage will have a total weight of 1,440 lbs. This totals 3,266 lbs of supported weight resting on three brackets or 1,089 lbs.per bracket. This places a load per bracket of 54% of the rated vertical load design. The smaller stainless steel shield and six (6) element storage basket loaded with elements have a total weight of 1,167 lbs. The added lead shield for the proposed storage will have a total weight of 878 lbs. This totals 2,045 lbs of supported weight resting on two brackets or 1,023 lbs. per bracket. This places a load per bracket of 51% of the rated vertical load design.

The weight distribution is well within tolerance of safety margin for the vertical load support.

ATTACHMENT 3

Materials:

All materials in contact with pool water are aluminum or stainless steel.

The boral inserts of the fuel basket will be cut from a common sheet which has with it a letter of certification of conformance from the manufacturer that it contains 35% by weight boron carbide.

The lead for the shields conforms to A.S.T.M. designation B29-55 and will be poured into the shields prior to sealing closed.

Construction Considerations:

The stand, fuel basket and shields are all welded to insure adequate strength except the two 3/8 inch thick spacers (Part 1) mounted on the back of the support stand. These are attached with machine screws so the thickness may be adjusted to insure a proper fit. Extension hooks (part 5) were added at the ends of the ten element row for the placement of future shields. Mounting holes and guide pins (parts 6 and 7) were also incorporated for future use. Consideration is being given to constructing this ten element basket to facilitate transferring elements to necessary locations.

Initial Operation:

Prior to loading fuel in the basket all boral sections will be scanned with a neutron source and neutron detector. When placed in service a subcritical measurement will be performed to ensure that K eff is less than 0.8 with 14 elements loaded.

THE FOLLOWING CRITERIA OUTLINE SAFETY CONSIDERATIONS:

ATTACHMENT 3

Criteria: Limit dose rate outside biological shield to levels not exceeding those at present.

The second level of element storage has lead shields whose attenuation equals or exceeds the present solid stainless steel shields. In addition, the concrete block construction adjacent to the current Z basket area is less dense than the poured concrete which will lie adjacent to the second level of Z basket storage.

Criteria: Limit additional dose rate through water shielding to acceptable levels.

With the pool at refuel level there will be approximately 15 feet of water shielding above the second level of spent fuel storage. Conservatively assuming a decay time of 10^3 seconds Figure 8 of the MURR design data indicates a dose rate of 0.1 mr/hr per newly stored per element should be expected. The same figure indicated a per element dose rate of less than 0.1 mr/hr for elements stored for a period of one week. Thus the total added dose rate due to 8 elements just removed from service and 6 elements that had been stored for one week would be less than 1.4 mr/hr at the surface of the pool water with the pool at refuel level.

Criteria: Fuel elements shall be stored in a geometry such that under moderation, the maximum value for K eff shall not exceed 0.8

The addition of another level of elements was modelled using the Exterminator II neutron diffusion code. The presence of 24 rather than 14 elements on the second level was used for a "factor of safety". The code predicts a value for K eff of 0.748. Thus, the above criteria is satisfied for fuel storage.

Criteria: Sufficient thermal shielding or appreciable water thickness must be provided so that the temperature rise in the concrete shall not exceed 30° F.

This criteria was addressed in the original design of the spent fuel storage racks (Design Data, Volume I, TM-RKD-62-9). Results indicated a requirement of 2.0 inches of lead to shield 8 adjacent elements just removed from the reactor (conservatively assumed 10^3 seconds decay time). The shields manufactured contain 2 inches of lead. Thus this criteria is satisfied.

ATTACHMENT 3

Criteria: The heat contributed to the pool by the added 14 elements awaiting shipment shall not cause an appreciable pool temperature increase over periods when the pool system is secured.

For this calculation it is conservatively assumed that none of the added heat load of the 14 elements is transferred out of the pool. It is also assumed that two of the 14 elements have just been retired from service. This second assumption is based on the fact that under the current MURR fuel cycle program, the elements are depleted in pairs.

After a one hour decay, the two recently retired elements will contribute a majority of the decay heat load, initially 20 KW. The 12 remaining elements are assumed to have a decay history of only 30 days. These 12 contribute 15 KW. To simplify calculations it will be assumed that the decay heat load of the newly removed elements is constant at the 20 KW value for the first 24 hours at which time it is reduced to the heat load level 8.5 KW for 2 elements with one day decay for the remainder of the weekend period. Thus, the total heat load for the 14 spent fuel elements will be 35 KW for the first 24 hours and 23.75 KW for the remaining 48 hours. Using the formula $q = MC_p\Delta T$ one can determine that the temperature rise over the first 24 hours is 19° F, while that over the remaining 48 hours is 26° F. The total temperature increase in the pool water over the weekend period will be less than 45° F since this ΔT would result if no heat were transferred to the surroundings. The degree of conservatism in this result is illustrated by the fact that at present the pool temperature increase over the weekend resulting from 24 elements stored in the Z basket and 8 elements in the core is approximately 15° F.

Standard Operating Procedures require that following a shutdown the pool system shall remain in operation for a minimum of five minutes. Data from pool temperature charts for various times of the year indicates a maximum temperature of 80° F after system shutdowns. Thus, even with the extremely conservative assumptions made, the final temperature of the pool water will be 140° F (80° + 15°F + 45°F) which is well below the saturation temperature of 212° F.

ATTACHMENT 3

Criteria: Safety in moving fuel.

Prior to spent fuel shipping the second level of baskets must be moved to the weir area so that elements to be shipped may be transferred to the upper level of baskets. The fuel movement sequence shall be written so that at any time that the baskets are moved there will be no more than six elements contained in the baskets. The six elements shall be secured in the basket, (see design drawings). Six elements contain insufficient fuel for criticality.

ATTACHMENT 3

RTP-15
Revised 8-6-76

PROCEDURE FOR INSTALLATION OF SPENT FUEL STORAGE BASKET

1. After completion of shop work and prior to installation in pool, scan each element storage box with Pu-Be neutron source and detector to insure presence of boral, record data.

2. Manipulate fuel as per sequence to place the 14 elements awaiting shipment in the east two rows of the present Z basket (Z11, to Z24)

3. Install shields and basket, secure to stand. Install SRM detector and take a series of base line counts. Record dose rate at this time.

4. Remove 14 fuel elements from vault storage and place in new Z basket as per sequence. A 1/m plot will be maintained as each element is loaded into the basket.

5. Upon completion of transfers to additional Z storage baskets, return the non-irradiated fuel elements to vault storage. Elements shall be bagged, H.P. monitoring will be required.

6. Compile data generated in steps 1, 3, and 4, and give to reactor manager for inclusion in mod package.

Approved: Caudle Julian

Caudle Julian
Reactor Manager

Date: 8/6/76

ATTACHMENT 3

SAFETY SUBCOMMITTEE

Minutes of Meeting of April 8, 1976

Members Present: W. Meyer, D. Harris, C. Slivinski, D. McKown, R. Marriot, J. Jacovitch, H. Danner, C. Julian, T. Storvick.

Guests Present: C. McKibben, C. Edwards, G. Schlapper, G. David.

1. The meeting was called to order at 1445.

2. The chairman reported to the subcommittee that the parent committee in its last meeting, expressed desire to see more details of the proceedings in the subcommittee minutes.

3. The subcommittee reviewed the circumstances of the March 2, 1976 abnormal occurrence report regarding the failure of vent tank level controller 925 B. C. Julian summarized the situation and answered questions. The subcommittee unanimously concurred with the action taken.

4. The subcommittee reviewed the abnormal occurrence report of March 24, 1976 regarding jumpering of the rod run-in functions on regulating blade position. C. Julian discussed the cause and corrective action. The subcommittee unanimously approved of the action taken.

5. The subcommittee reviewed Reactor Utilization Request Number 243 submitted by M. Janghorbani of the Environmental Trace Substances Research Center. The subcommittee suggested editorial changes and D. McKown noted that the RUR limitations were based on actual in-practice experience at the MURR. After discussion, the subcommittee unanimously recommended approval of the RUR as modified.

6. The subcommittee began discussion of proposed modification package 76-3 for the installation of additional spent fuel storage in the MURR pool. C. Julian, C. Edwards, and G. Schlapper discussed the need for additional storage and the proposed design. During this discussion W. Meyer left the meeting, turning the chair over to T. Storvick. After questions and explanation, the subcommittee unanimously recommended approval of the design concept and recommended that the project proceed, providing that any safety related problems or design changes be reported back to the subcommittee for further review.

7. The subcommittee reviewed proposed modification 76-4 for the replacement of pool low level rod run-in switch 910. C. Julian explained that this change is an upgrade of originally installed equipment. The subcommittee unanimously recommended approval of the modification.

ATTACHMENT 3

8. New staff members Charles McKibben, Reactor Operations Engineer and Chester Edwards, Reactor Plant Engineer were introduced to the subcommittee. The meeting was adjourned at 1610.

Prepared By:

Caudle Julian

Caudle Julian
Secretary

Approved By:

Dr. Walter Meyer
Chairman

CJ:ld

ATTACHMENT 3

REACTOR SAFETY EVALUATION

Modification Number 76-3

Does this change involve changes to the Technical Specifications or an unreviewed safety hazard as described in 10 CFR, section 50.59

A proposed change, test, or experiment shall be deemed to involve an unreviewed safety question (i) if the probability of occurrence or the consequences of an accident or malfunction of equipment important to safety previously evaluated in the safety analysis report may be increased; or (ii) if a possibility for an accident or malfunction of a different type than any evaluated previously in the safety analysis report may be created: or (iii) if the margin of safety as defined in the basis for any technical specification is reduced.

Yes _____ No X Signature Chester B. Edwards

EVALUATION

This Mod does not constitute a change but an addition to the facility. The initial design criteria was reviewed and used as the basis for the proposed design. The criteria for safety considerations are outlined in the proposal.

ATTACHMENT 3

REACTOR SAFETY ANALYSIS

Page 4- ____

MODIFICATION NUMBER 76-3

Does this change involve a change to the reactor facility as defined in the Hazards Summary and its addenda?

Yes ____ No. X Signature Chester B. Edwardsoff

If yes, make an analysis below, if no, outline the basis for the decision.

The Z fuel storage constitutes an addition to the facility and not a change. The gamma dose and thermal heat load to the pool for a fully loaded basket has been reviewed and found to follow the initial design criteria. Because of the physical location, the gamma dose to the biological shielding is considered to be equal to or less than the lower basket. The total thermal heat load is greater but calculations indicate that this is not a problem. See the criteria for safety consideration of the proposal for more information.

Form Revised 10/31/75

ATTACHMENT 3

Modification 76-3: Upper 2 spent fuel storage

Crew evaluation of this proposal was initiated 4/6/76. No constructive suggestions were forthcoming.

Caudle Julian

Caudle Julian
Reactor Manager

ATTACHMENT 3

Crew Evaluation

Modification Number 76-3 Page 5-_____

All crew members are asked to comment in some manner on this proposal.

Name	Remarks
B²	SEEMS TO BE MORE TROUBLE THAN ITS WORTH.
WAM	There has got to be a better way. (DEEP POOL MAYBE)
BJL	SEEMS TO ME THERE MAY BE A LOT OF TROUBLE GETTING TO ELEMENTS WHEN WE HAVE TO REFUEL USING MIXED CORE LOADINGS. ALSO, WHERE IS THE STORAGE FACILITY GOING TO BE LOCATED FOR THE SPENT FUEL STORAGE FACILITY WHEN IT IS NOT BEING USED. WHAT ABOUT OFFSET IN WEIR, WILL IT GET IN WAY OF BASKET? WHAT ABOUT DOSE RATES WITH SIX ELEMENTS AT WEIR FLOOR LEVEL?
jfm	Don't like it at all!!! There has to be a better way!!! Sounds like a railroad job
MJL	Don't like it also. And, although of minor consequence, it does involve Tech Spec 3.8 E & so it should be included in the Mod Package.
aJL	How often would it have to be moved? How much would it increase fuel handling over a permanent facility?
LK	IT MEANS INCREASED FUEL HANDLING => A GREATER POSSIBILITY OF DAMAGEING FUEL ELEMENTS WITH RESPECT TO A PERMINENT STOWAGE ANYWHERE ELSE IN THE POOL (M.S.)
MET	Why don't you just take your crew evaluation & shove it. I am sick of being asked to comment on something after the fact. Since many hours have already been spent in constructing these lead shields in the shop. As far as I'm concerned they have been wasted because the idea sucks & so does the philosophy behind the use of these evaluation
JAW	How's all this supposed to fit together in the weir with fuel shipping cask?? Also agree with statement concerning crew evaluations, sounds like a rubber stamp job to me. The idea does not seem to work very well anyway

10/18/85

Cont'd

ATTACHMENT 3

from the standpoint of fuel handling. Sounds like it was designed by a desk jockey!!

This proposal is dated April 7, 1976, today is april 8, 1976. This white elephant has been under construction for at least a week. What is the purpose of a crew evaluation anyway? Is it to placate the operators or is it a formality to satisfy the NRC? As far as I can see the proposed fuel storage facility is universally opposed by the operators as bein being unsafe, extremely hard to work with, a Rube Goldberg way of doing things, ect. I'd just like to say — NO CLARK, TRY AGAIN.

All this is based on the premise that you can't put 6 spent fuel elements out of the way in the deep pool. So we have no alternative chose than to overfill handling fuel. Stacking moving jockeying more jockeying. With every thing we do based on probabilities I'd say the probability of a fuel element being damaged plus higher radiation doses to personnel makes unnecessary fuel handling dangerous.

JUST BECAUSE Z IS THE LAST LETTER IN THE ALPHABET, DOESN'T KEEP US FROM USING W IN THE PLA

ATTACHMENT 3

Brooks & Perkins, Incorporated

Materials Handling Division • P.O. Box 550 • Cadillac, Michigan 49601 • 616 775-9715

March 26, 1976

Ref: Certification of Conformance

University of Missouri
Purchasing Dept.
General Services Building
Columbia, Mo. 65201

Attention: Chester Edwards

1 sheet Boral 1/4" x 48" x 120", 35% B_4C

We hereby certify that the core section of the composite material contains 35% by weight of boron carbide.

Reference: Invoice #78139
Sheet #977

Brooks & Perkins, Inc.

Charles S. Timmons

Charles S. Timmons
Quality Assurance

EVERT L HANCOCK
Notary Public, Wexford County
My Commission expires October 14, 1978

Evert L. Hancock

ATTACHMENT 3

Date 8/6/76

1/m Test of new Z Basket Storage - Then Refuel with 2E-1 page (212)

MURR REFUELING SEQUENCE

Note: Each step involves the transfer of a single element. During each step, the transfe element's number must be visually confirmed.

Step Number	Move Element Number	From Position	To Position	Time	Position and Element Numb Confirmed by (initials
23	775F73	Z32	VAULT	1835	CJ
24	775F80	Z31	VAULT	1837	CJ
25	775F77	Z25	VAULT	1840	CJ
26	775F78	Z26	VAULT	1843	CJ
27	775F79	Z30	VAULT	1845	CJ
28	775F76	Z27	VAULT	1848	CJ
29	775F74	Z38	VAULT	1850	CJ
30	775F75	Z33	VAULT	1852	CJ
31	775F71	Z37	VAULT	1855	CJ
32	775F70	Z34	VAULT	1857	CJ
33	775F67	Z29	VAULT	1859	CJ
34	775F72	Z36	VAULT	1903	CJ
35	775F66	Z28	F1	1952	CJ
36	775F65	F3	F2	1955	CJ
37	775F55	Y6	F3	2000	CJ
38	775F54	F4	Z37	2003	CJ
39	775F50	Y3	F4	2017	CJ
40	775F58	F5	X3	2018	CJ
41	775F68	Z35	F5	2021	CJ
42	775F63	F6	Z32	2025	CJ
43	775F69	F7	F6	2028	CJ
44	775F57	Y2	F7	2031	CJ
45	775F62	F8	Z38	2033	CJ
46	775F58	Y3	F8	2035	CJ
47	775F61	Y4	Z31	2039	CJ

Movement of Depleted Elements to Z11 thru Z24

ATTACHMENT 3

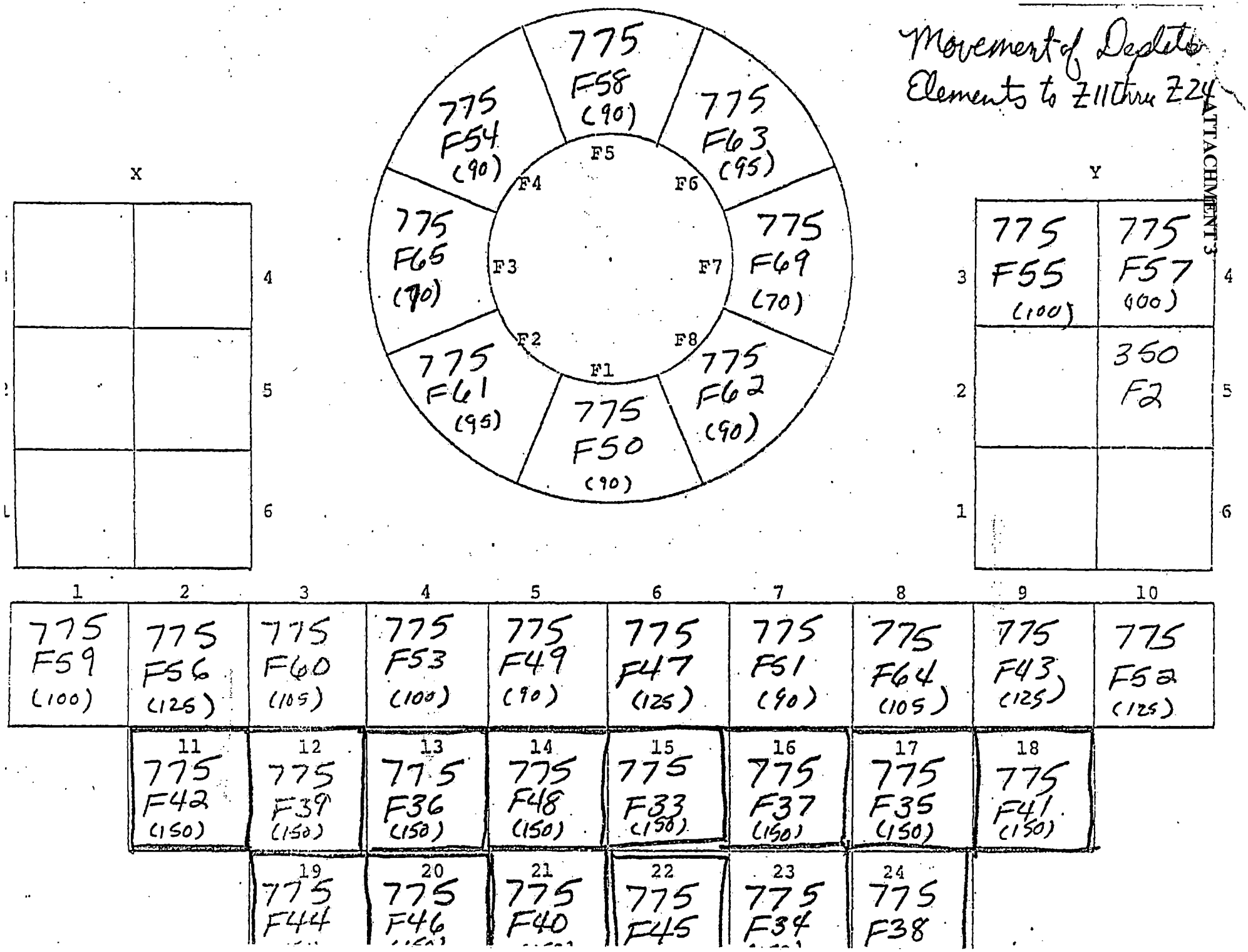

ATTACHMENT 3

Date 8/6/76

1/m Test of New Z Basket Storage - Then Refuel with 2E-1 page (1/2)

MURR REFUELING SEQUENCE

Note: Each step involves the transfer of a single element. During each step, the transfe element's number must be visually confirmed.

Step Number	Move Element Number	From Position	To Position	Time	Position and Element Numb Confirmed by (initials
Install Basket and Shields. Hook up SRM detector on offset, install neutron source, take ~~pre~~ base counts.					
1	775F66	VAULT	Z28	1327	jcm
2	775F67	VAULT	Z29	1333	jcm
3	775F68	VAULT	Z35	1338	jcm
4	775F72	VAULT	Z36	1345	jcm
5	775F55	Y3	Z27	1419	jcm
6	775F57	Y4	Z30	1422	jcm
7	775F~~61~~50	F1	Z26	1425	jcm
8	775F61	F2	Z31	1428	jcm
9	775F61	Z31	Y4	1646	CY
10	775F50	Z26	Y3	1650	CY
~~11~~	~~775F55~~	~~Z27~~	~~Y6~~ 8		CY
11	775F57	Z30	Y2	1653	CY
12	775F55	Z27	Y6	1655	CY
13	775F70	VAULT	Z34	1725	CY
14	775F71	VAULT	Z37	1730	CY
15	775F75	VAULT	Z33	1735	CY
16	775F74	VAULT	Z38	1742	CY
17	775F76	VAULT	Z27	1745	CY
18	775F79	VAULT	Z30	1805	CY
19	775F78	VAULT	Z26	1809	CY
20	775F77	VAULT	Z25	1813	CY
21	775F80	VAULT	Z31	1820	CY
22	775F73	VAULT	Z32	1827	CY
Test complete - return elements to vault then refuel.					

γ dose test

↓ cont. next page

Core 2[redacted]E-1

ATTACHMENT 3

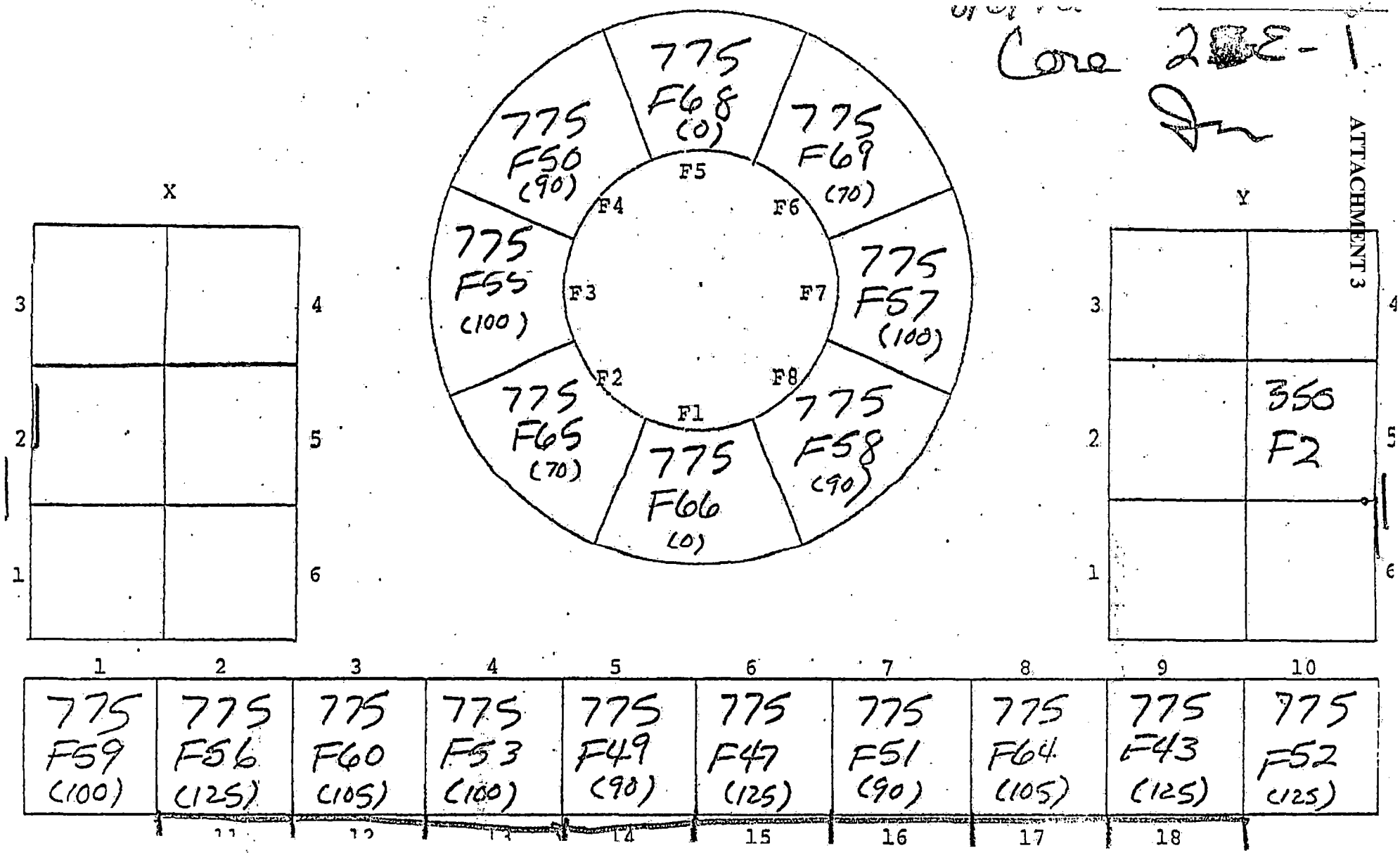

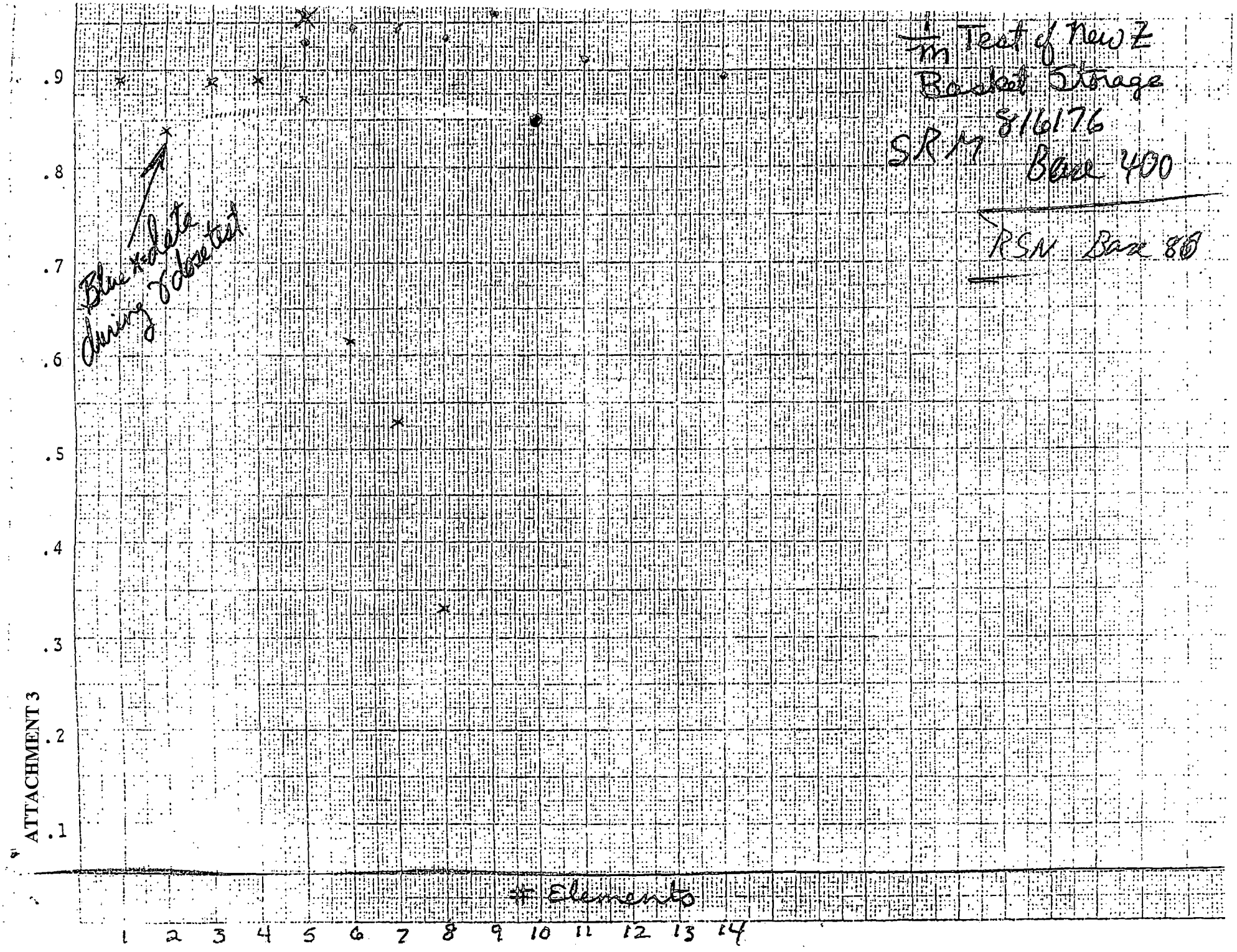

ATTACHMENT 3

ATTACHMENT 3

DATA, Dose rates vs # elements, Z basket
8/6/76

# Elements	Approximate Reading (mr/hr)
0	7
1	8
2	8
3	8
4	8
5	8
6	8
7	12
8	
9	
10	
11	
12	
13	
14	

ATTACHMENT 3

DATA, 1/m Test of Z Storage 8/6/76

# Elements	Countrate	Co/C	
0	400 / .5	1	(Co)
1	450 / .5	.89	
2	475 / .5	.84	
3	450 / .9	.89	
4	450 / .9	.89	
5	460 / .9	.87	
6	650 / .3	.615	
7	760 / 2	.53	
8	1200 / 2.5	.33	
152s 7	700	.57	

ATTACHMENT 3

Side	Reading
17	50
18	45
19	20
20	50
21	50
22	30
23	65
24	50
25	40
26	20
27	60
28	20
29	45
30A →	← 30A ⟺ 35
30B	60
31	25
32	55
33	40
34	55
35	35
36	45
37	45

Test by G. David + G. Schlapper on 28 Jul 76.

ATTACHMENT 3

Scan of new Z Basket - In Air, Polyethylene / Pu-Be source

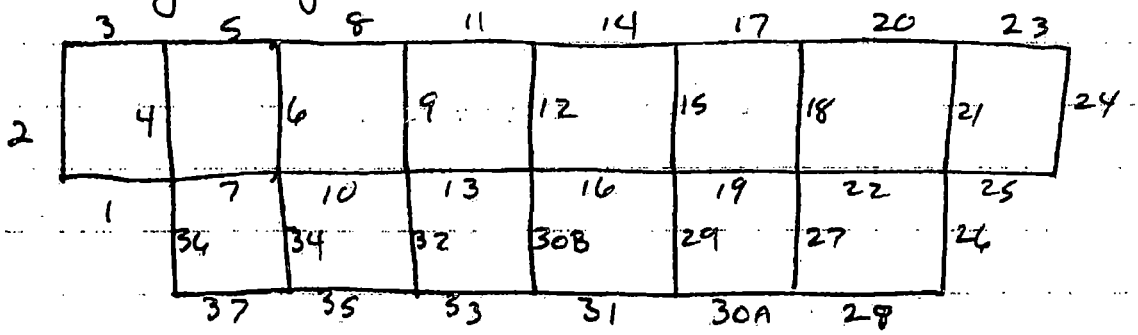

Reading of Source in air
120 (mrh) on X10 scale, Victoreen Model 488A
Univ. I.D. 213976

Side Number	Basket Scan Max Reading (mrh) X10 scale
1	45
2	40
3	50
4	45
5	50
6	40
7	15
8	55
9	55
10	15
11	55
12	50
13	25
14	45
15	45
16	25

ATTACHMENT 4

ORIGINAL

MODIFICATION RECORD

Modification Number 76-3 revision

Page 1

Modification Spent Fuel Storage

Page No.	Page Title	Required Yes	Required No	Date Completed	By
1.	Modification Record	x			jcm
2.	System Proposal	x			jcm
3.	Preop Test Procedures	x		30 Oct 78	cm
4.	Reactor Safety Evaluation	x		29 Sept 78	cm
5.	Crew Evaluation		X	N/A	
6.	Safety Subcommittee Review	X		20 Oct 78	jcm
7.	Reactor Advisory Committee Review		X		
8.	AEC Review		X		

Modification Approved [signature] 20 Oct 78

Reactor Manager — Date

Date of Completion 9 Oct 78

Modification Completed [signature]

Reactor Manager

Form Revised
10-31-75

ATTACHMENT 4

REVISION TO MODIFICATION PACKAGE 76-3

INSTALLATION OF 14 ELEMENT SPENT FUEL STORAGE BASKET

As required by the Safety Committee Meeting of April 8, 1976, implementation of 10 element storage basket addition shall be reported back to the Subcommittee for review. The following report is submitted to meet this requirement.

10 Element Z Basket Installation

The present fuel storage capacity at MURR is 38 elements in the Z basket and 4 elements in the X and Y baskets. The remaining 8 spaces in the X and Y baskets are required to defuel the core if the situation arises. An increase in the fuel storage capacity is necessitated by:

1. NRC regulation of having less than 5Kg of unirradiated fuel in the fuel vault.

2. 120 plus days of decay time required per element before spent fuel shipment.

3. Operating schedule and unirradiated fuel inventory has increased the number of fuel elements involved in our fuel cycle.

The 10 element basket size is dictated by space available in the Z basket storage area. Construction and material of the 10 element basket is similar to the previous 14 element basket. The support stand and shielding for the new 10 element basket was incorporated in the initial construction for Modification Package 76-3. The weight of the 10 element basket, fully loaded, is approximately 340 lbs. This will result in a total support weight of 3,600 lbs. resting on 3 brackets or 1,200 lbs. per bracket. Each bracket is design rated to carry a vertical load of 2,000 lbs; therefore, load is 60% of rated vertical load design.

Safety Considerations

Prior to loading fuel in the basket, all boral sections will be scanned with a neutron source and neutron detector to verify boral present. When placed in service, a subcritical measurement will be performed to ensure that K_{eff} is less than 0.8 with 10 elements loaded.

Decay Heat Build Up

Decay heat build up in pool for 3-day period for 24 element versus 14 element upper Z basket.

14 element		24 element	
2 elements retired		2 elements retired	
12 elements, 30 day decay		22 elements, 30 day decay	
2 elements	20KW	2 elements	20KW
12 elements	15KW	22 elements	27.5KW
End of 24 hrs.	35KW = 19°F increase per 1st day	End of 24 hrs.	47.5KW = 25.8°F increase per 1st day
2 elements	8.5KW	2 elements	8.5KW
12 elements	15KW	22 elements	27.5KW
	23.5KW = 12.8°F increase per 2nd & 3rd day		36.0KW = 19.5°F increase per 2nd & 3rd day
End of 3 days	45°F increase versus		66°F increase

Calculations are conservative since they assume no heat is transferred out of the pool. The degree of conservatism is illustrated by the fact that during 5-day week operations; pool temperature increase over the weekend resulting from 24 elements stored in the lower Z basket and 8 elements in the core was approximately 15°F. Maximum pool temperature after shutdown from past experience was 80°F following shutdown procedures. Thus, 161°F (80°F + 15°F + 66°F) would be maximum pool temperature after 3 days which is well below saturation temperature of 212°F.

Surface Dose Rate

Dose rate increase should be less than 2.0mr/hr at surface of pool water with pool at refuel level for the 10 element basket addition. A survey will be conducted to verify this data.

All other safety criteria were considered in the submittal of Modification Package 76-3 since the design model incorporated a 24 element upper Z basket addition versus the 14 element basket installed.

Submitted by

Dave McGinty
Dave McGinty
Reactor Physicist

Approved by

Charlie McKibben
Charlie McKibben
Reactor Manager

ATTACHMENT 4

RTP-15B
October 3, 1978

PROCEDURE FOR INSTALLATION OF UPPER Z
FUEL STORAGE BASKET

1. Prior to installation for fuel element loading, a scan will be performed on each element storage box with Pu-Be neutron source and detector to insure presence of boral. Scan data will be recorded.

2. Manipulate fuel as per sequence to facilitate fuel shipment and fuel cycle.

3. Ensure shields are in place, install basket and secure to stand. Install SRM detector and take a series of base line counts. Record dose rate at this time.

4. Remove 2 fuel elements from vault storage and place in new Z basket per sequence. Complete the transfer sequence to fully load the Z basket storage facility.

   Note: A 1/M plot will be maintained as each element is loaded into the basket. If K_{eff} from graph reaches 0.8, the procedure will be stopped and Reactor Manager informed.

5. After completion of transfer sequence and verification that K_{eff} of assembly is less than 0.8; (Establish does rate with Z basket storage area completely loaded.) refuel the core according to applicable sequence.

6. Compile data generated in steps, 1, 3, and 4. Complete forms are to be given to the Reactor Manager for inclusion in mod package.

Submitted by

David McGinty

Dave McGinty
Reactor Physicist

Approved by

J C McKibben

Charlie McKibben
Reactor Manager

ATTACHMENT 4

Data: 1/M Test of Z Storage Date 90.t78

# Elements	Count rate	Co/C
0 *	116	1
1	129	.899
2	137	.847
3	180	.644
4	195	.595
5	232	.5
6	286	.406
7	297	.391
8 **	290 / 121	.40 / .9586
9	159	.729
10	151	.768

* Base Counts Established with Z Storage Area completely Loaded with the exception of the 10 Element Addition

** Elements position changed to create more γ shelding for the detector. New Elements positioned on both sides of the detector.

Dose Rate @ Refuel Level	# Elements	Dose Rate @ Refuel Level	# Elements
12	0	15	6
12	1	15	7
13	2	15	8
13	3	15	9
13	4	16	10
13	5		

Performed by David McSmity

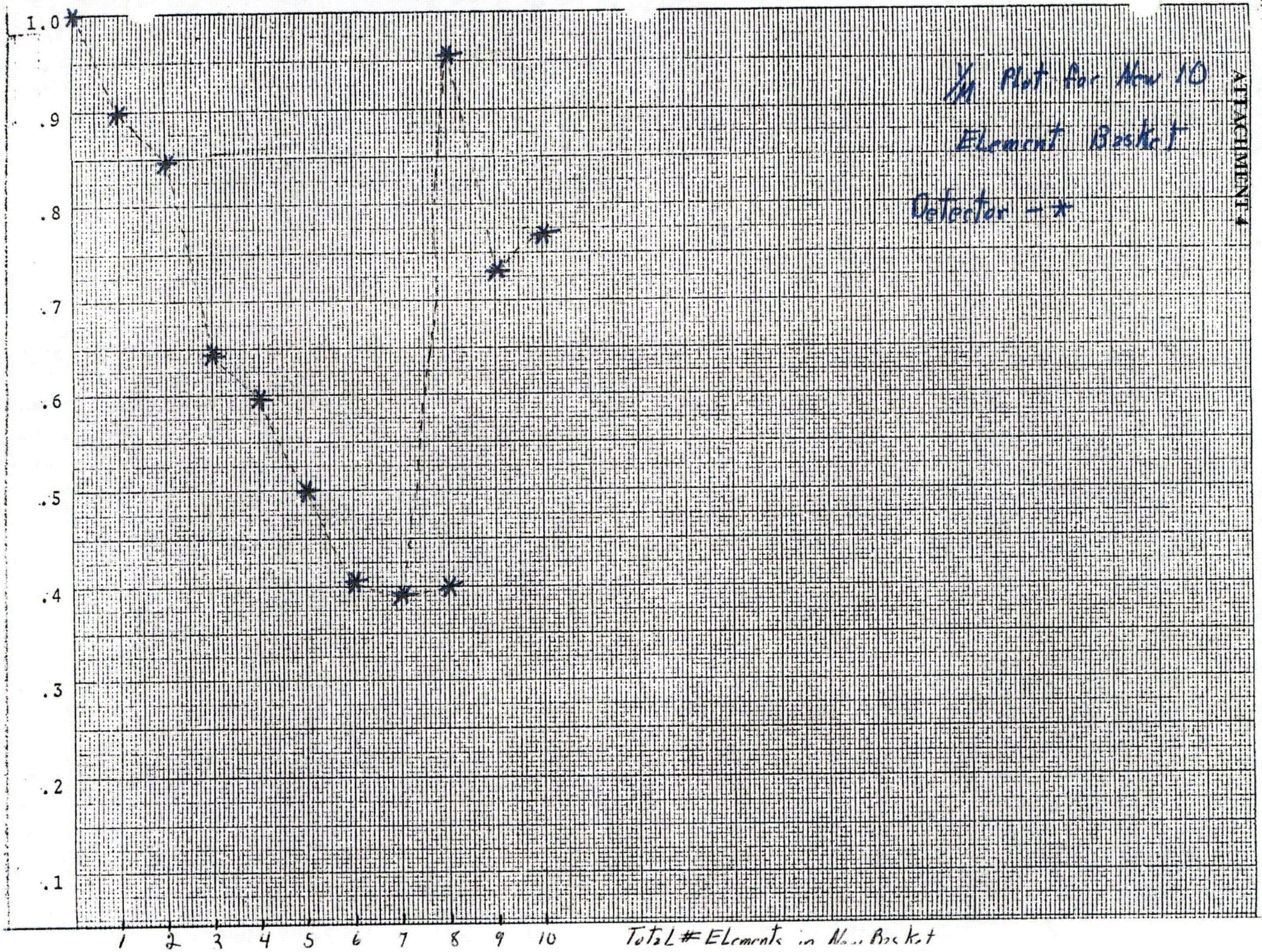

ATTACHMENT 4

Date 10/18

ATTACHMENT 4

Done

MURR REFUELING SEQUENCE

Note: Each step involves the transfer of a single element. During each step, the transf element's number must be visually confirmed.

New Z basket installed. Connect 1 SRM detectors to monitor Z basket. Take base counts with neutron source (Record base dose rate)

Step Number	Move Element Number	From Position	To Position	Time	Position and Element Num Confirmed by (initial
1	775 F 80	Y2	Z41	0459	MAF
2	775 F 86	F1	Z26	0500	MAF
3	775 F101	F2	Z33	0505	MAF
4	775 F100	F3	Z25	0508	MAF
5	775 F107	F4	Z34	0511	MAF
6	775 F111	Vault	Z29	0524	MAF
7	775 F112	Vault	Z30	0549	MAF
8	775 F96	Y1	Z31	0554	MAF
9	775 F92	X1	Z28	0601	MAF
10	775 ~~F105~~ 92	~~X5~~ Z28	Z27	0608	[illegible]
11	775 F106	X6	Z32	0621	MAF
12	775 F112	Z30	Z28	0611	MAF
	775 F105	X5	Z30	0614	MAF
	Measurement of Koff completed. New dose rate measured. Install new core.	2JJ-1			
12	775 F111	Z29	F1	0717	✓
13	775 F92 Z27	~~Z28~~	F2	0721	✓
14	775 F91	Z43	F3	0727	✓
15	775 F106	Z32	F4	0731	✓
16	775 F88	F5	Z43	0733	✓
17	775 F112 Z28	~~Z30~~	F5	0736	✓
18	775 F97	F6	Z32	0739	✓
19	775 F96	Z31	F6	0741	✓
20	775 F104	F7	Z31	0746	✓
21	775 F79	Z39	F7	0748	✓
22	775 F108	F8	Z39	0751	✓
23	775 F105 Z30	~~Z29~~	F8	0753	✓
	MWD ~ 527				
	ECP ~ 15.8"				

ATTACHMENT 4

10 Element Z Basket

Scan of new Z Basket - In Air

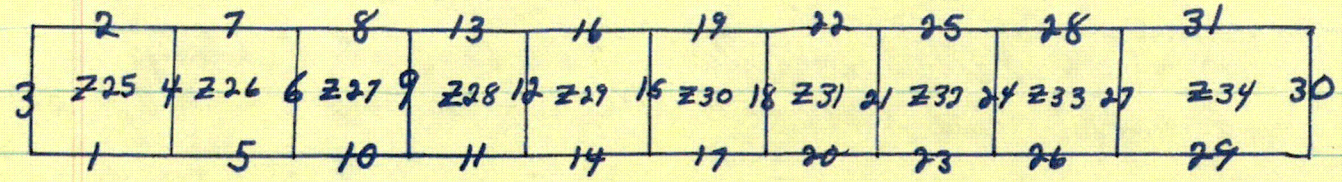

Reading of Source in Air - 7120 (x10 with scale)

Side Number	Max Reading	Side Number	Max Reading
1	56	17	33
2	30	18	11
3	32	19	28
4	45	20	32
5	40	21	15
6	50	22	31
7	20	23	25
8	28	24	12
9	18	25	41
10	26	26	32
11	35	27	15
12	15	28	22
13	29	29	20
14	41	30	30
15	33	31	22
16	31		

Victoreen 488 A x10 with scale

Performed by J Schlapper D McSorley

Date 10-4-78

ATTACHMENT 4

REACTOR SAFETY EVALUATION

Modification Number 76-3 Revision

Does this change involve changes to the Technical Specifications or an unreviewed safety hazard as described in 10 CFR, section 50.59

A proposed change, test, or experiment shall be deemed to involve an unreviewed safety question (i) if the probability of occurrence or the consequences of an accident or malfunction of equipment important to safety previously evaluated in the safety analysis report may be increased; or (ii) if a possibility for an accident or malfunction of a different type than any evaluated previously in the safety analysis report may be created: or (iii) if the margin of safety as defined in the basis for any technical specification is reduced.

Yes _____ No X Signature David M. McGinty

EVALUATION

This Mod (76-3 Revision) does not constitute a change but an addition to the facility. The initial design criteria was reviewed and used as the basis for the proposed design. The criteria for safety considerations are outlined in the proposal.

ATTACHMENT 4

REACTOR SAFETY ANALYSIS

MODIFICATION NUMBER 76-3 Revision

Does this change involve a change to the reactor facility as defined in the Hazards Summary and its addenda?

Yes____ No. X Signature David M. McGinty

If yes, make an analysis below, if no, outline the basis for the decision.

The addition of the 10 element upper Z storage basket completes an earlier Modification Package 76-3. The thermal heat load to the pool and the surface gamma dose rate have been reviewed and are within the initial design consideration. The heat load increase due to the 10 element basket addition is 11°F or less over a three day period. Therefore maximum pool temperature remains over 60°F less than saturation temperature (212°F). Surface dose rate increase should be less than 2 mr/hr. A more comprehensive analysis is included in the report to the Safety subcommittee on 20 Oct 78 and Modification Package 76-3.

ATTACHMENT 4

REVISION TO MODIFICATION PACKAGE 76-3

INSTALLATION OF 14 ELEMENT SPENT FUEL STORAGE BASKET

As required by the Safety Committee Meeting of April 8, 1976, implementation of 10 element storage basket addition shall be reported back to the Subcommittee for review. The following report is submitted to meet this requirement.

10 Element Z Basket Installation

The present fuel storage capacity at MURR is 38 elements in the Z basket and 4 elements in the X and Y baskets. The remaining 8 spaces in the X and Y baskets are required to defuel the core if the situation arises. An increase in the fuel storage capacity is necessitated by:

1. NRC regulation of having less than 5Kg of unirradiated fuel in the fuel vault.

2. 120 plus days of decay time required per element before spent fuel shipment.

3. Operating schedule and unirradiated fuel inventory has increased the number of fuel elements involved in our fuel cycle.

The 10 element basket size is dictated by space available in the Z basket storage area. Construction and material of the 10 element basket is similar to the previous 14 element basket. The support stand and shielding for the new 10 element basket was incorporated in the initial construction for Modification Package 76-3. The weight of the 10 element basket, fully loaded, is approximately 340 lbs. This will result in a total support weight of 3,600 lbs. resting on 3 brackets or 1,200 lbs. per bracket. Each bracket is design rated to carry a vertical load of 2,000 lbs; therefore, load is 60% of rated vertical load design.

Safety Considerations

Prior to loading fuel in the basket, all boral sections will be scanned with a neutron source and neutron detector to verify boral present. When placed in service, a subcritical measurement will be performed to ensure that K_{eff} is less than 0.8 with 10 elements loaded.

Decay Heat Build Up

Decay heat build up in pool for 3-day period for 24 element versus 14 element upper Z basket.

14 element		24 element	
2 elements retired		2 elements retired	
12 elements, 30 day decay		22 elements, 30 day decay	
2 elements	20KW	2 elements	20KW
12 elements	15KW	22 elements	27.5KW
End of 24 hrs.	35KW = 19°F increase per 1st day	End of 24 hrs.	47.5KW = 25.8°F increase per 1st day
2 elements	8.5KW	2 elements	8.5KW
12 elements	15KW	22 elements	27.5KW
	23.5KW = 12.8°F increase per 2nd & 3rd day		36.0KW = 19.5°F increase per 2nd & 3rd day
End of 3 days	45°F increase versus		66°F increase

Calculations are conservative since they assume no heat is transferred out of the pool. The degree of conservatism is illustrated by the fact that during 5-day week operations; pool temperature increase over the weekend resulting from 24 elements stored in the lower Z basket and 8 elements in the core was approximately 15°F. Maximum pool temperature after shutdown from past experience was 80°F following shutdown procedures. Thus, 161°F (80°F + 15°F + 66°F) would be maximum pool temperature after 3 days which is well below saturation temperature of 212°F.

Surface Dose Rate

Dose rate increase should be less than 2.0mr/hr at surface of pool water with pool at refuel level for the 10 element basket addition. A survey will be conducted to verify this data.

All other safety criteria were considered in the submittal of Modification Package 76-3 since the design model incorporated a 24 element upper Z basket addition versus the 14 element basket installed.

Submitted by

Dave McGinty
Reactor Physicist

Approved by

Charlie McKibben
Reactor Manager

9-29-78

ATTACHMENT 4

Crew Evaluation

Modification Number

Page 5-_____

All crew members are asked to comment in some manner on this proposal.

Name	Remarks
	NA

ATTACHMENT 4

10 Element Z Basket

Scan of new Z Basket - In Air

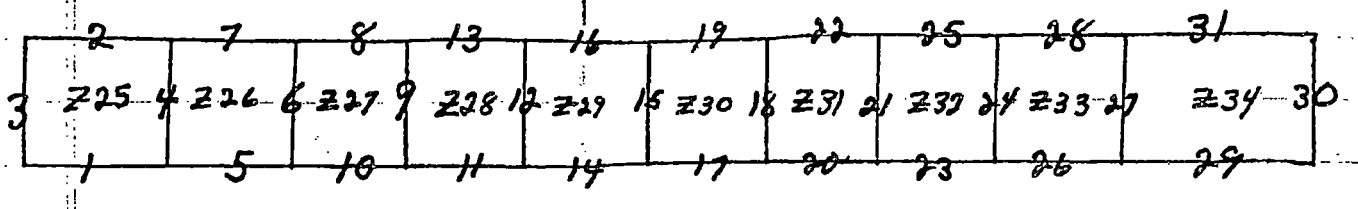

Reading of Source in Air - > 120 (x10 mr/h scale)

Side Number	Max Reading	Side Number	Max Reading
1	36	17	33
2	30	18	11
3	32	19	28
4	45	20	32
5	40	21	15
6	50	22	31
7	20	23	25
8	28	24	12
9	18	25	41
10	26	26	32
11	35	27	15
12	15	28	22
13	29	29	20
14	41	30	30
15	33	31	22
16	31		

Victoreen 488 A x10 mr/h scale

Performed by J Schlappen D McCarty

Date 10-4-78

ATTACHMENT 5

ORIGINAL

Revised: 2/18/86
App'd WMM
Reactor Manager

MODIFICATION RECORD

MODIFICATION NO. 91-3

Modification Temporary Additional in-pool fuel storage baskets

Page No.	Page Title	Required YES	Required NO	Date Completed	By (Initials)
1	Modification Record	x		10/22/91	WMM
2	System Proposal	x		10/22/91	WMM
3	Reactor Safety Analysis	x		10/22/91	WMM
4	Reactor Safety Evaluation	x		10/22/91	WMM
5	Crew Evaluation	x		12-13-91	TB
6	MURR SOP Review Complete	x		10-22-91	TB
7	Compliance or P.M. Revision	~~x~~	x	10-22-91	TB
8	Parts Requirement Sheet	x		10-22-91	TB
9	Prints, Technical Manual, Spare Parts Change Requirements	x			

Modification Approved: Walter Meyer Aug 5, 1991
Reactor Manager Date

Date of Completion: ~~10/2~~ WMM 12/13/91 w/exc. of prints

Modification Completed: Walter Meyer
Reactor Manager

REVIEW AND FOLLOW-UP ACTION

Item No.		Required YES	Required NO	Date Completed	Documented By (Initials)
1	Safety Subcommittee Review	X		~~3/12/92~~ 2/28/92 WMM	
2	Reactor Advisory Committee Review				
3	U.S. NRC Review				
4	MURR Drawings Updated				

SYSTEM PROPOSAL

The inability of MURR to establish spent fuel shipping capability since the GE-700 cask was removed from service in September 1989 has created the need for temporary additional in-pool fuel storage. This modification package documents the evaluations performed to show that the use of two shipping baskets designed for use in the MH1A cask as temporary in-pool storage facilities does not present an unreviewed safety question. Each MH1A shipping basket has twelve fuel element storage positions in a three by four matrix with a boral sheet between each row of four elements(see page 13). These baskets will be attached by brackets to the deep pool"X" and"Y" basket fuel element storage to provide stability and lateral support. These brackets are made of 0.25" aluminium angle(see page 15) and provides a position for the OS basket if additional in-pool storage is needed.

The evaluation performed for each MH1A basket will include a criticality analysis(KENO), a boral plate verification, thermal analysis and 1/M determination when it is first loaded. A separate evaluation will be made of the OS basket if used as deep pool storage in conjunction with the two MH1A baskets.

MODIFICATION NO. 91-3

ORIGINAL

Revised: 2/18/86
App'd _____
Reactor Manager

REACTOR SAFETY ANALYSIS

Does this change involve a change to the reactor facility as defined in the Hazards Summary and its addenda?

Yes ____ No _X_ Signature: _____

If YES, make an analysis below and attach a suggested revision to the HSR. If NO, outline the basis for the decision.

The Hazards Summary Report (HSR) describes in-pool fuel storage in three parts of the Original HSR. Section 6.4, Spent Fuel Transfer and Storage (p.6-5) and Section 7.1.8, Fuel Handling System (p.7-8) describe irradiated fuel storage in the context of radiation dose outside the biological shield. Section 13.2.11, Refueling Accident provides accident analysis for irradiated fuel transfers within the pool and states "all storage racks have been designed to be safe with regard to criticality"(p.13-14).

The storage of irradiated fuel in the MHX and MHY baskets do not involve a change to the reactor facility as defined in HSR. These storage positions meet the dose rate criteria of Section 6.4 and 7.1.8 of Original HSR.

Section 6.4 (Figure 6.6) shows that for storage of eight fuel elements adjacent to the primary reactor shield (with 40 days continuous operation at 10 MW and fission product decay time of 10^5 seconds) the dose rate at one foot from the outside of the reactor shield would be approximately 1mr/hr. This is well within the criteria of 2.5mr/hr at one foot from shield surface required by HSR.

The minimum thickness of magnetite concrete between MHX or MHY baskets to the outside of the biological shield is five feet. A further margin from the dose rate criteria is provided by the location of the MH baskets greater than eleven inches from the pool wall (not adjacent); the fact that each basket represents a dose configuration less than an eight element array adjacent to the pool wall and the fact that MURR fuel cycle produces irradiated elements with

a lower activity than the basis fuel cycle of forty days continuous operation at 10MW. Elements stored in MHX and MHY will have greater than 10^6 seconds of decay(11.6 days)

A criticality analysis and 1/M determination for initial loading of these baskets verify that these storage positions are safe with regard to criticality to meet the requirements of Original HSR Section 13.2.11.

Design data volume I section TM-RKD-62-9 Thermal Shielding Requirements for Spent Fuel Storage Facilities provides thermal shielding requirements for spent fuel storage facilities. Thermal shielding or appreciable water thickness must be provided around the spent fuel storage racks to protect the biological shield concrete from damage due to thermal stresses and excessive temperatures. Thermal shielding requirements are based on radiation heating in the concrete and resulting temperature conditions within the concrete. The design criterion is that the temperature rise in the concrete should not exceed 30^0 F.

With an administrative limit of no fuel elements stored in the MHX or MHY position with a decay time less than 10^6 seconds(11.6 days), all storage positions except 1,8,9,and 10 in MHX and 1,8,9 and 2 in the MHY have greater than the minimum water thickness for thermal shielding of Table 4-A of Design Data Volume 1.(See page 13) The thickness requirements presented in the table are based on a configuration of a row of eight elements stored adjacent to the biological shield. "Alternate configurations will require less thermal shield thickness" (p.5 of Thermal Shielding Requirements For Spent Fuel Storage Facilities.)

Storage positions 1,8,9 and 10 in MHX and 1,8,9 and 2 in MHY have less shielding than the minimum thickness for water thermal shielding in Table 4-A and will be administratively limited to fuel elements with greater than one year of decay(3×10^7 seconds). Elements with this decay represent fission product activity and hence gamma heating source, about one twentieth(1/20) of the activity(and gamma heating source) of a fuel element with 10^6 seconds of decay [J. Huang M.S thesis, 300 days on cycle, 120 days of irradiation, 180 days out of core alternating in and out of core(See page 11 and 12)]

MODIFICATION NO. 91-3 ORIGINAL

Revised: 2/18/86
App'd _____
Reactor Manager

REACTOR SAFETY EVALUATION

Does this change involve changes to the Technical Specifications or an unreviewed safety hazard as described in 10 CFR, section 50.59?

A proposed change, test, or experiment shall be deemed to involve an unreviewed safety question (i) if the probability of occurrence or the consequences of an accident or malfunction of equipment important to safety previously evaluated in the safety analysis report may be increased; or (ii) if a possibility for an accident or malfunction of a different type than any evaluated previously in the safety analysis report may be created; or (iii) if the margin of safety as defined in the basis for any technical specification is reduced.

Yes ____ No X Signature _____

EVALUATION

The safety evaluation of MURR by the Division of Reactor Licensing dated July 27, 1966 identified the safety criteria for fuel storage and handling, as providing assurance of not having a critical fuel configuration, even with the unlikely mishap that might occur during fuel handling. The safety evaluation by the Directorate of Licensing dated May 24, 1974 supporting the MURR power upgrade to 10 MW did not elaborate further on spent fuel storage. The most recent amendments to MURR reactor license R-103 dated May 8, 1991 states: " There are no specific accidents in this type of research reactor associated with the storage of spent fuel in accordance with Technical Specifications. The maximum hypothetical accident of complete fission product release of four fuel plates is not affected by increasing the amount of stored fuel. Because the fuel will be stored in accordance with Technical specifications, accidents previously evaluated are not changed and no new or different kind of accident is created. Therefore, staff concludes that the temporary increase in the possession limit of U-235 is acceptable."

Technical specification 3.8.d states that all fuel elements stored outside the reactor core will be stored in a geometry such that calculated K_{eff} is less than 0.9 under all conditions. This will be met by first verifying that the two boral plates are installed in each MH1A basket(see attached results), a computer criticality analysis(KENO) will be performed with the "Y" basket and MHY basket full of new elements , the "X" basket and MHX baskets full of new elements and then an analysis with all baskets full of elements(see attached). When fuel is loaded in each basket for the first time a 1/m plot will be performed (see attached). This will assure compliance with tech. specs and demonstrate that use of these in-pool storage baskets does not present an unreviewed safety hazard as defined in 10 CFR 50.59.

ATTACHMENT 5

MODIFICATION NO. _____

ORIGINAL

Revised: 2/18/86
App'd _____
Reactor Manager

CREW EVALUATION

All crew members are asked to comment in some manner on this proposal.

Name	Remarks
J. Gann	O.K.
M. Kilfoil	O.K.
B. Bezenek	Looks O.K.
V. Jones	OK
Nolan T.	OK
FOYTO	YEP
Neel	OK
T. Warner	OK

ATTACHMENT 5

MODIFICATION NO. 91-3

ORIGINAL

Revised: 2/18/86
App'd wm
Reactor Manager

STANDARD OPERATING PROCEDURE CHANGES

For each change cite, section, part, and paragraph. Include a copy of each change.

Section	Part	Paragraph
		NA wm

MODIFICATION NO. 91-3 ORIGINAL

Revised: 2/18/86
App'd
Reactor Manager

COMPLIANCE CHECK REVISIONS/PREVENTIVE MAINTENANCE REVISIONS

Attach a copy of all new or modified compliance checks to this section.

Compliance Check	Frequency	Date Incorporated into System

P.M. Description	P.M. Number	Date Incorporated into System

MODIFICATION NO. 91-3 ORIGINAL

Revised: 2/18/86
App'd _____
Reactor Manager

PARTS REQUIREMENT SHEET

.	Parts Description	Part No.	Purchase Order No.	Date Received

Purchase Order No. _
Ordered From _
_____
_____
Date_____

Purchase Order No.___
Ordered From_
_____
_____
Date _____

Purchase Order No. _____
Ordered From _____
_____
_____
Date _____

Purchase Order No. _____
Ordered From _____
_____
_____
Date _____

MODIFICATION NO. 91-3

ORIGINAL

Revised: 2/18/86
App'd [illegible]
Reactor Manager

BLUE PRINTS -- SPARE PARTS -- TECHNICAL MANUALS

BLUE PRINTS:

Print No.	Print Title	New Print	Rev. of Old Print	Rev. No.	Date Rev.
2306	MH1A fuel holders	X	N/A	N/A	

SPARE PARTS:

Qty.	Part Description	Part No.	Purchase Order No.	S.P. No.	Date Re'd.

Purchase Order No. _____
Ordered From _____
_____
Date _____

Purchase Order No. _____
Ordered From _____
_____
Date _____

TECHNICAL MANUALS

Manual Title	Ordered From	Date Ordered	Date Rec'd.	Manual No.

ATTACHMENT 5

ORIGINAL

J. Huang M.S. Thesis
10 MW, 775 element
300 days in cycle,
120 days of irradiation,
180 days out of core,
alternating in/out of
core.

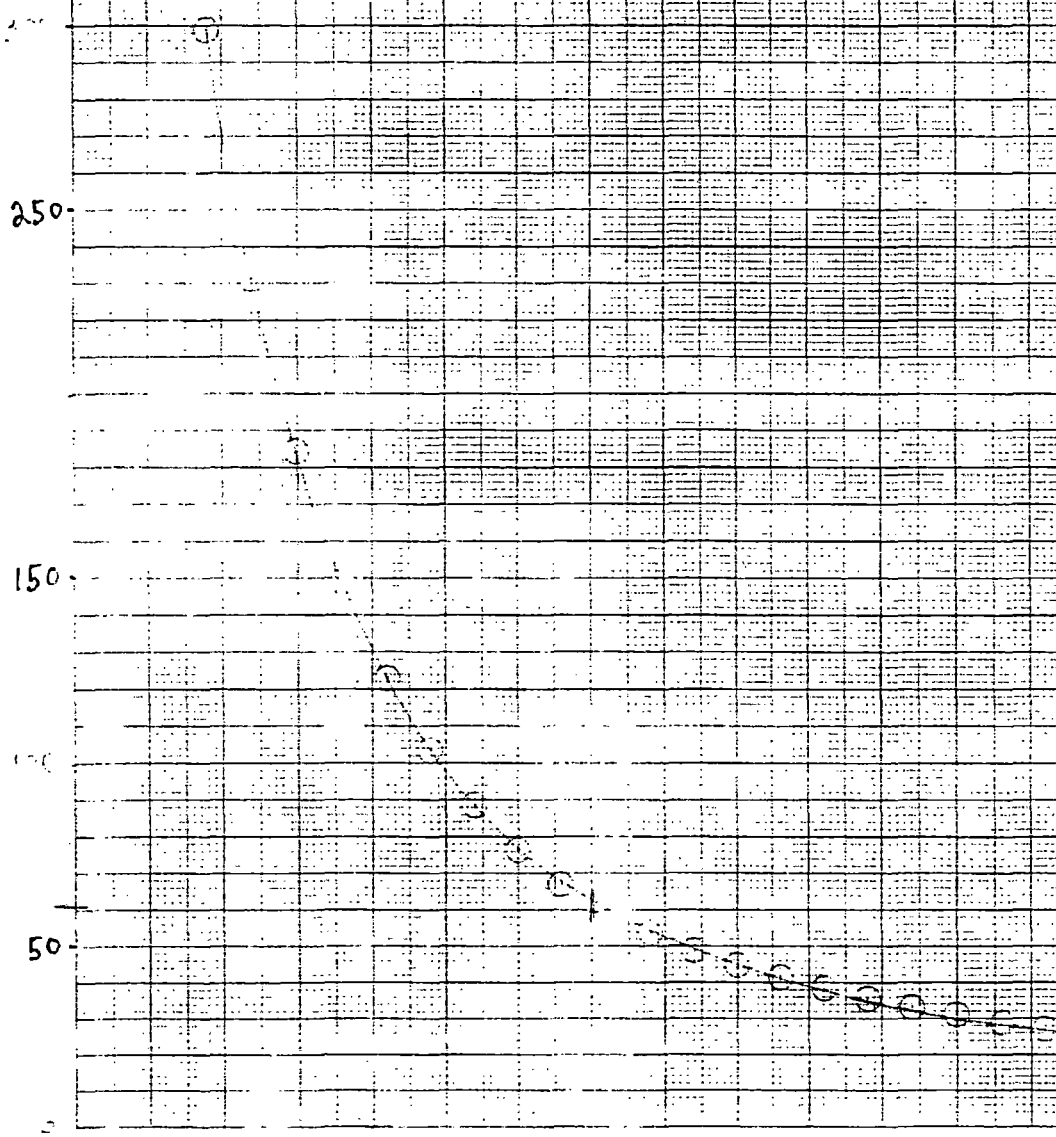

461510

ATTACHMENT 5

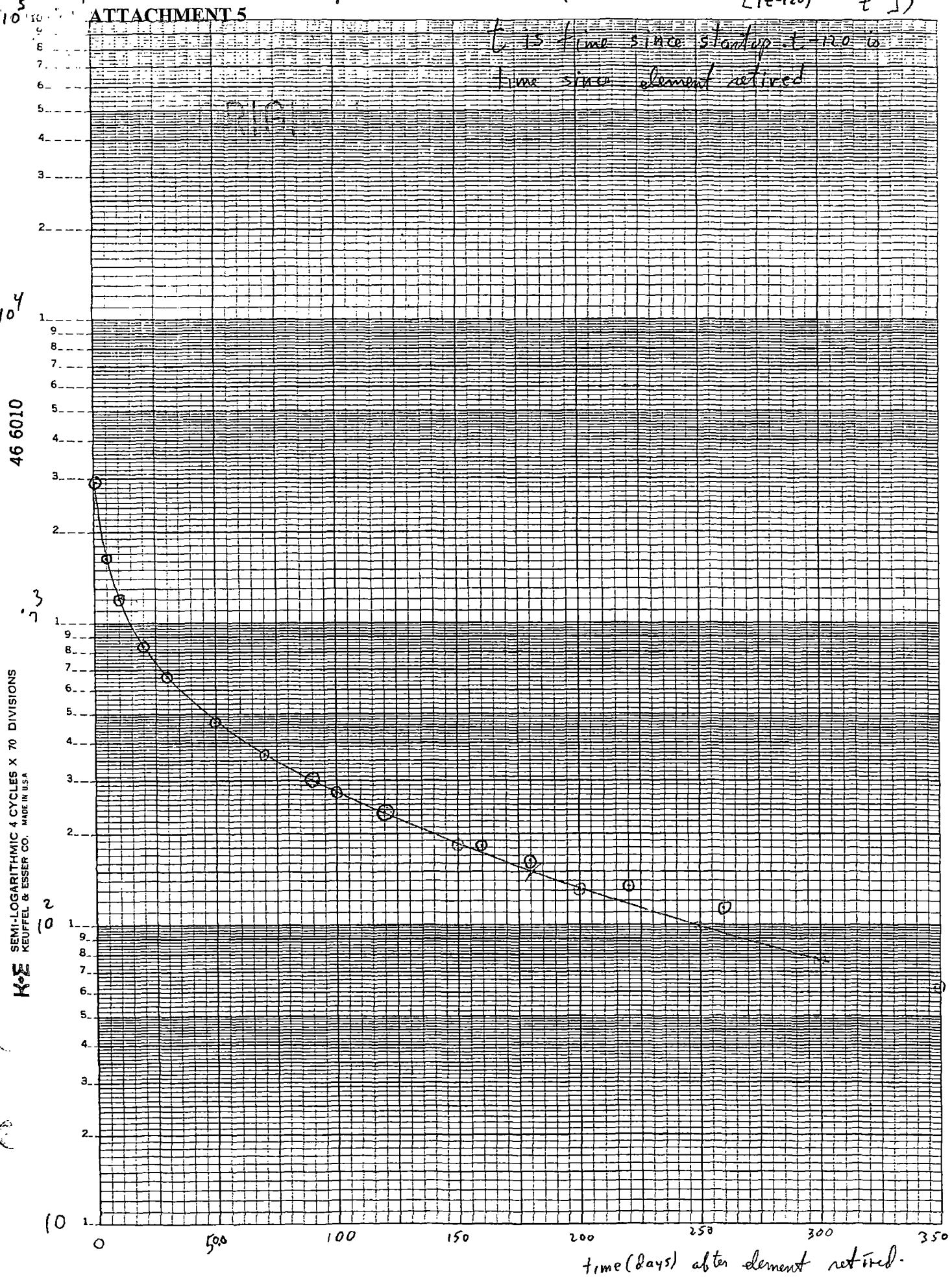

13 of 15

ATTACHMENT 5

ORIGINAL

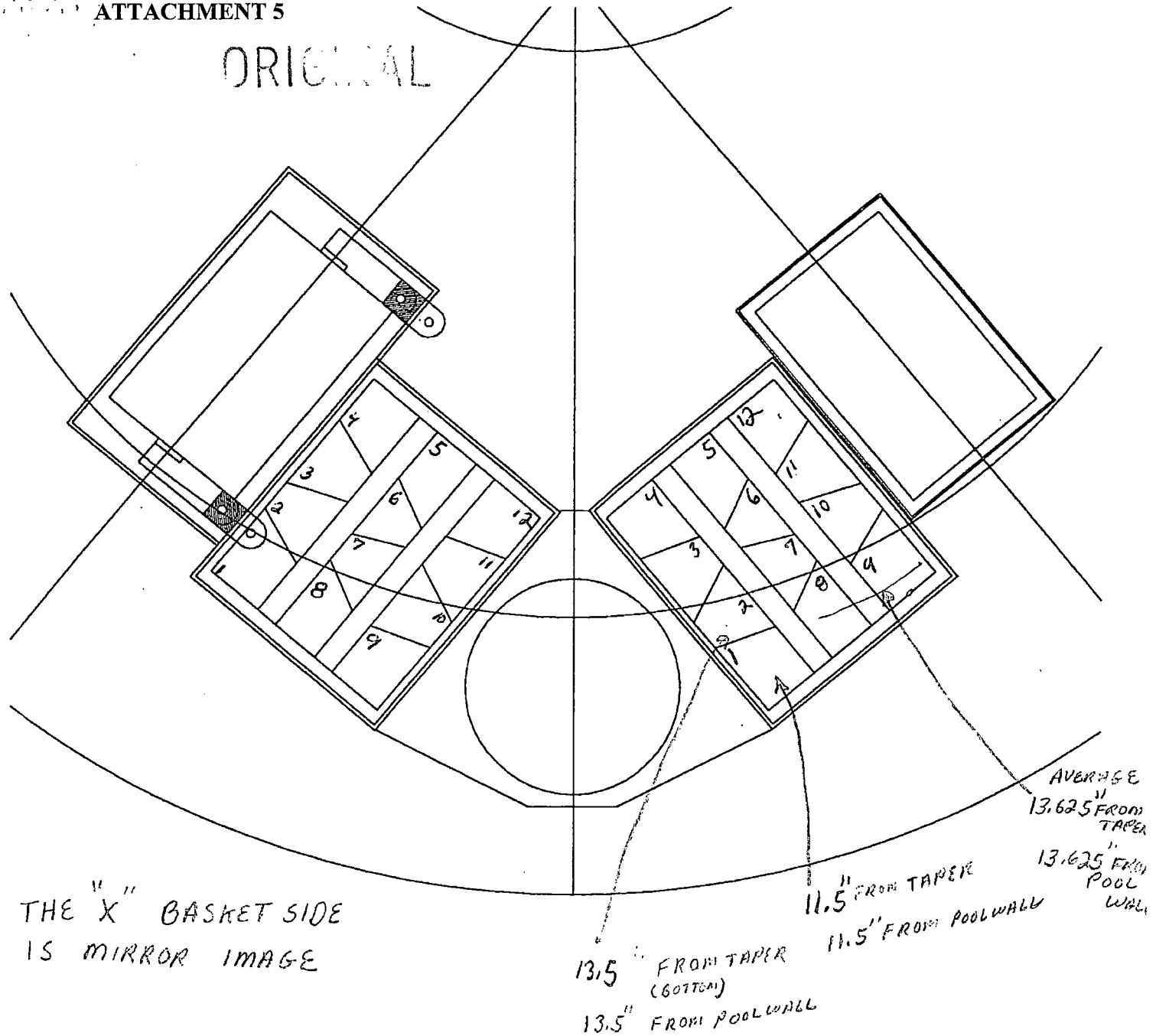

THE "X" BASKET SIDE IS MIRROR IMAGE

14 OR 15

ATTACHMENT 5

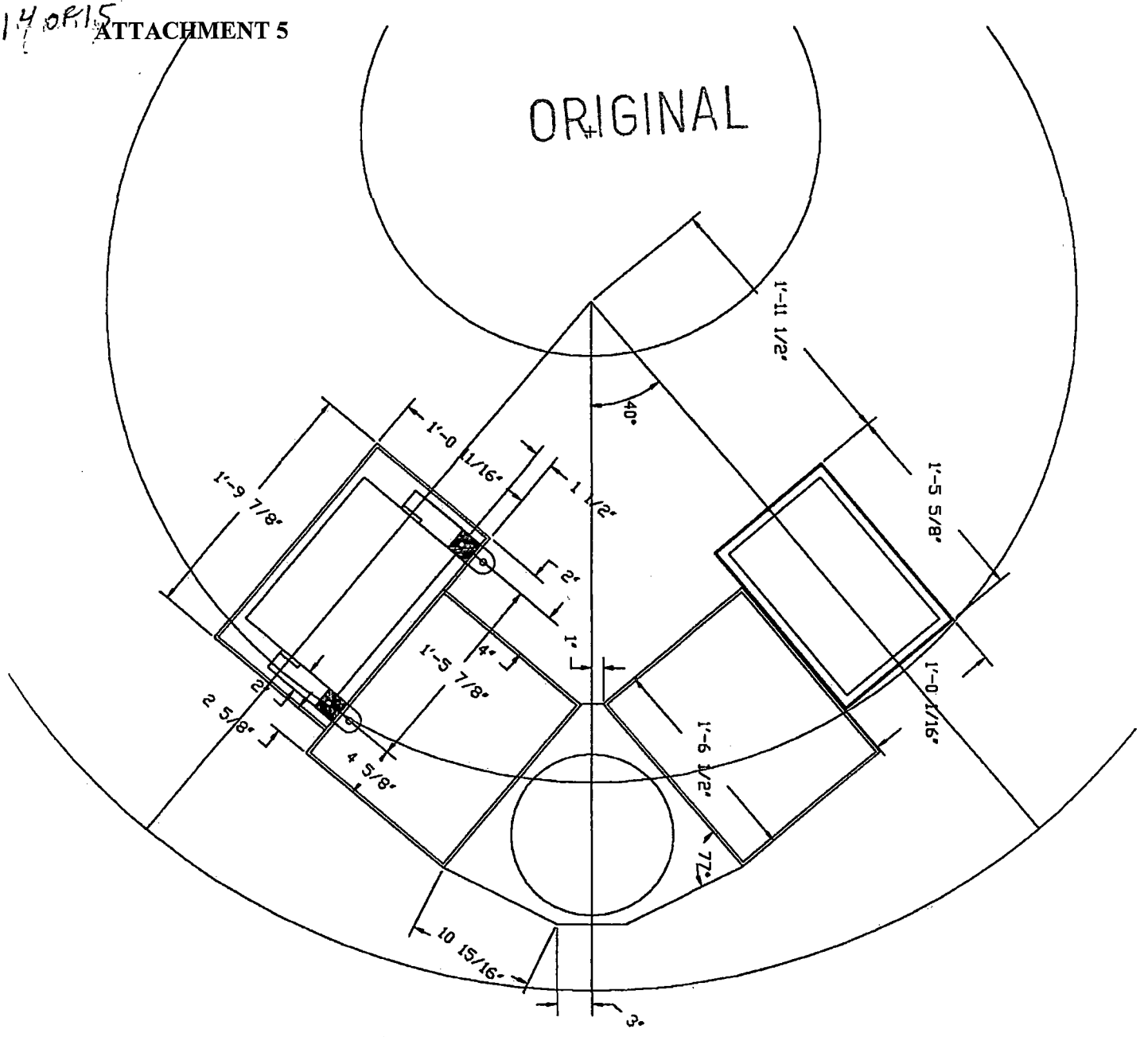

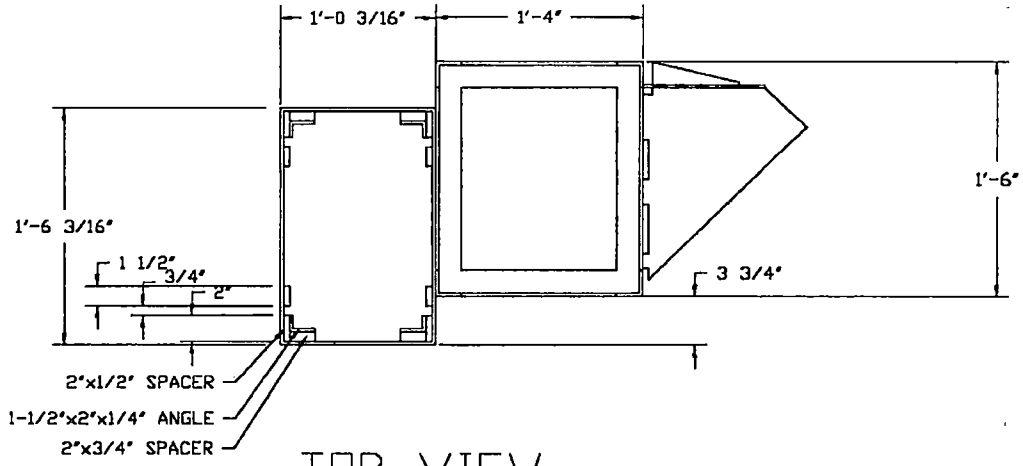

TOP VIEW

ORIGINAL

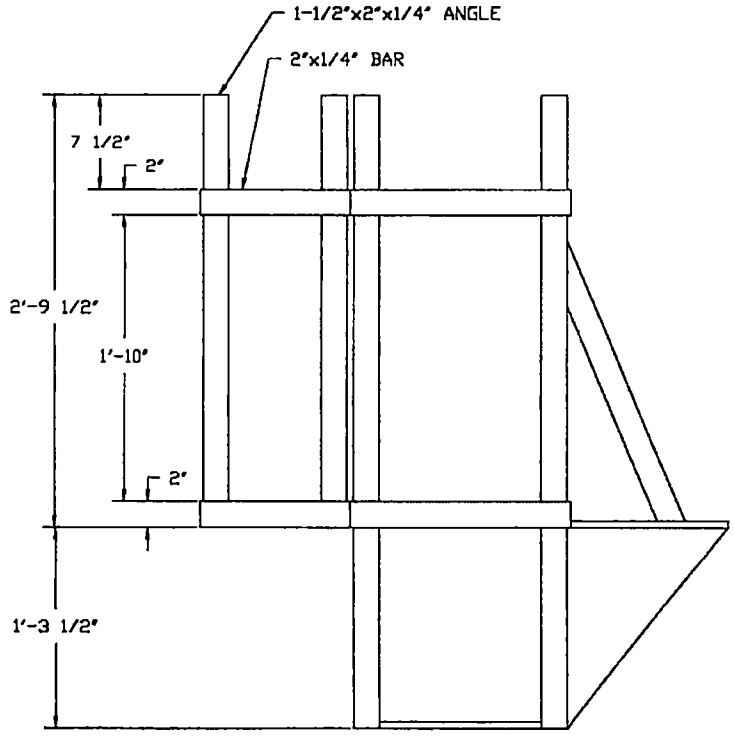

FRONT VIEW

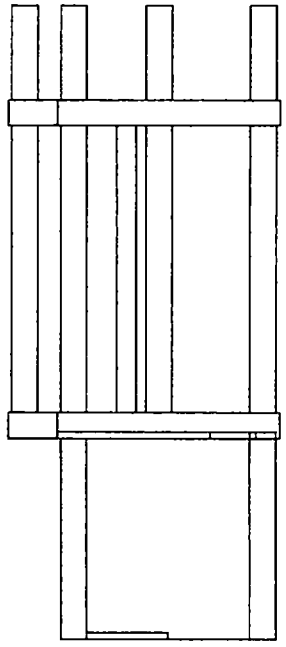

SIDE VIEW

ATTACHMENT 5

1.5 of 1.5

ATTACHMENT 5

September 29, 1993

Attachment to Modification Package 91-3
Storage of Irradiated Fuel in OS Basket (1/30/93)

The use of the OS basket for temporary fuel storage adjacent to the "X" basket was first implemented in 1979. The current arrangement of the OS basket with the MHX and MHY temporary storage positions not in the pool does not represent an unreviewed safety question. If the OS basket is used in conjunction with the MHY and MHX baskets an additional evaluation will be performed.

Elements stored in OS basket all have greater than 177 days decay. The edge of OS basket nearest the pool wall is approximately 12 inches from the wall. Table 4-A of Design Data, Vol. I, Thermal Shielding Requirements for Spent Fuel Storage Facilities, indicates 14" of water needed for fuel with 10^6 seconds of decay. These elements had 177 days (min) of decay [1.5×10^7 sec] so adequate thermal shielding is available. The thermal shielding of the 1/4" thick stainless steel bottom and side of the OS basket are not considered, but would further reduce the water thickness required as thermal shield.

ATTACHMENT 6

COPY

AP-RO-115
Revision 1

MODIFICATION RECORD: SHORT FORM

FOR:
1) Addenda to existing Modification Records (e.g., modifications of same nature as ones previously reviewed and approved).
2) Significant modifications to the facility or facility systems that are not described in the Hazards Summary Report.
3) Modifications that require engineering decisions/implementation in a time frame that precludes normal licensed operator review prior to implementation.
4) Modifications to non-safety systems; for documentation and review only.

NOTE:	Licensed operators will review these modifications as part of the Operator Requalification Program. The Reactor Safety Subcommittee will review these modifications.

Modification Number: 91-3, Addendum 1

Modification Title: Replacement of the Existing X, Y, MH-X, and MH-Y Fuel Storage Baskets With New X and Y Baskets

Page No.	Page Title	Required Yes	Required No	Date Completed	By (Initials)
1	Modification Record: Short Form	X		2-8-04	[illegible]
2	Modification Description (Why Short Form is appropriate)	X		2-8-04	[illegible]
3	Hazards Summary Report Evaluation	X		2-8-04	[illegible]
4	Reactor Safety Evaluation	X		2-8-04	[illegible]
5	OP, PM, CP, and Print Evaluation	X		2-8-04	[illegible]
6	Spare Parts Requirements		X	2-8-04	[illegible]

50.59 Screen Completed: [signature] Date: 2-11-04
(Asst. Reactor Manager – Engineering)

Reactor Safety Subcommittee Review: _____ Date: _____
(Asst. Reactor Manager – Engineering)

Modification Approved: [signature] Date: 2-11-04
(Reactor Manager)

Modification Completed: _____ Date: _____
(Reactor Manager)

Modification Number: 91-3, Addendum 1

MODIFICATION DESCRIPTION

Provide a concise description of the system change. Include any proposed PRE-OPERATIONAL TESTS required for this change. (If additional pages are necessary, insert after this page.)

MURR fuel, new or irradiated, may be stored in any one of five (5) fuel storage locations in the reactor pool. These five storage locations are designated as X, Y, Z, MH-X, and MH-Y. The X and Y storage locations can each hold 6 fuel elements. The MH-X and MH-Y locations can each hold 12 elements while the Z storage location can store a total of 48 fuel elements. These fuel storage locations have been designed to the following specifications:

(a) A geometry such that the calculated Keff is less than 0.9 under all conditions of moderation and irrespective of the number of fuel elements stored or the amount of burnup per element;
(b) Sufficient natural convection cooling to prevent a fuel element from exceeding its design temperature;
(c) Location within the reactor pool at a sufficient depth to provide adequate radiation shielding;
(d) Arrangement in the reactor pool to permit efficient handling during the insertion, removal, or interchange of fuel elements; and
(e) Fabrication from materials compatible with the fuel elements.

Additionally, thermal shielding requirements for the fuel storage locations are presented in the MURR Design Data, Volume I. Thermal shielding or appreciable water thickness must be provided around the spent fuel storage baskets to protect the magnetite concrete from damage due to thermal stresses and excessive temperatures. The thermal shielding requirements are based on radiation heating in the magnetite concrete and the resulting conditions within the concrete. The design criterion employed is that the temperature rise in the concrete should not exceed 30 degrees F.

This Modification Record proposes to replace the current X, Y, MH-X and MH-Y baskets with two (2) new 20 element fuel baskets that will be designated X and Y. The new X basket will replace the old X and MH-X baskets and the new Y basket will replace the old Y and MH-Y baskets. Each new basket will have essentially the same footprint as the two baskets that they will be replacing but overall fuel storage capacity will increase from 36 to 40 in the deep pool. Additionally, a support plate will be placed between the new X and Y baskets that will provide a storage location for either the OS basket or a Be reflector ring. A separate evaluation will be needed if the OS basket is used at this location for storage.

Why a Short Form is appropriate.
(At least one of four reasons listed on Page 1, with justification)

The short form of the Modification Record is appropriate because this modification is an addendum to an existing, previously reviewed and approved Modification Record (91-3), "Temporary Additional In-Pool Fuel Storage Baskets."

Modification Number: 91-3, Addendum 1

MODIFICATION DESCRIPTION (con't)

The MH-X and MH-Y baskets were installed in 1991 as additional temporary fuel storage locations during a period when the facility was unable to ship fuel because two spent fuel shipping casks that were certified to transport MURR fuel were removed from service. The additional storage locations were needed to ensure that no interruption to MURR's operating schedule would be experienced. The MH-X and MH-Y baskets were designed and built for the MH1A shipping cask and were not intended for the everyday use that they have endured at MURR. Over the years, some of the boral and aluminum plates have swelled or warped making certain storage locations unusable. To ensure that we maintain maximum fuel storage capability during periods of shipment uncertainties, the new baskets were designed and constructed for everyday use, similar to that of the original X, Y, and Z storage baskets. Additionally, the newly designed baskets will increase storage capacity from 36 to 40 at these locations.

Each design specification listed on page 2 will be addressed individually in the applicable sections of this Modification Record. Specification (a) will be addressed in the Hazards Summary Report and Reactor Safety Evaluation sections. Specification (b) will be addressed in the Reactor Safety Evaluation section. Specification (c) will be addressed in the Hazards Summary Report Evaluation section. Specifications (d) and (e) will be addressed in this section of the Modification Record. Analysis of the thermal shielding requirements will be discussed in the Hazards Summary Report Evaluation section.

The new X and Y fuel storage baskets will be installed in the same locations as the current X, Y, MH-X, and MH-Y baskets. These locations meet the requirements of specification (d), which states, "Arrangement in the reactor pool to permit efficient handling during insertion, removal, or interchange of fuel elements." The closest fuel storage location from the new baskets to the reactor pool wall is about 14-inches (from the center of X basket storage location 20 or Y basket storage location 16). This is more than sufficient space to satisfy the requirements of specification (d). Included within this Modification Record is a print that shows the new fuel baskets superimposed over the current X, Y, MH-X, and MH-Y baskets thus indicating their similar footprints.

The new fuel baskets are designed and constructed comparable to that of the original X, Y, and Z storage baskets; baskets that have proven to be very dependable over time. Materials of construction are boral and aluminum. The boral for the new baskets are by percent weight less than that of the Z baskets (24 versus 35 w%) but still more than sufficient to satisfy the Keff requirement of specification (a). The materials of construction meet the requirements of specification (e), which states, "Fabrication from materials compatible with the fuel elements." Included in this Modification Record are the design and construction prints for the new baskets (MURR Drawing No. 2640). Also attached is a summary of the QA documentation for the boral plates provided by AAR Cargo Systems, Livonia, Michigan. The entire QA Boral Data Package will be maintained in Document Control for future reference.

Neutron radiography of eight randomly selected boral sheets that was performed at the University of California-Davis reactor indicated even dispersion of boron in the plates. These radiographs will also be maintained in Document Control.

ATTACHMENT 6

AP-RO-115
Revision 1

Modification Number: 91-3, Addendum 1

HAZARDS SUMMARY REPORT EVALUATION

Does this change involve a modification to the reactor facility as defined in the Hazards Summary Report?

Yes: ____ No: ✓ Signature: [signature] Date: 2-8-04

If YES, make an analysis below and provide the suggested revision(s) to the HSR. If NO, outline the basis for the decision.

This modification does not involve a change to the reactor facility as defined in the Hazards Summary Report and its addenda. In-pool fuel storage and transfer is described or discussed in the following sections: HSR - Section 6.4, "Spent Fuel Transfer and Storage"; HSR - Section 7.1.8, "Fuel Handling Systems"; and HSR - Section 13.2.11, "Refueling Accident." All of these sections are correct and will remain the same.

Section 6.4 describes the required biological shield thicknesses for spent fuel transfer and storage. Shield requirements for fuel storage in the pool are calculated to meet the dose rate criteria of the bulk shielding listed in Section 6.1. Figure 6.6 shows that for the storage of eight fuel elements (based on 40 days continuous operation at 10 MW and a fission product decay time of 1E5 seconds) adjacent to the primary reactor shield the dose rate at one foot from the outside of the reactor shield would be approximately 1 mr/hr. This is well within the design criterion of 2.5 mr/hr at one foot from the shield surface as required by the HSR.

The minimum thickness of the magnetite concrete between either new X or Y fuel storage basket and the outside surface of the biological shield is five (5) feet. Additional design features that are more conservative than those assumed in Section 6.4 include: (1) the closest section of the new fuel baskets is located approximately 12-inches from the reactor pool wall (tapered section) and not immediately adjacent, (2) the new baskets are in a configuration less than an eight element array, and (3) the current MURR fuel cycle results in irradiated elements with a much lower activity than the design basis fuel cycle of forty days of continuous operation at 10 MW. Elements stored in the new X and Y baskets for greater than 24 hours will have greater than 1E6 seconds of decay (11.6 days). This storage time requirement will be administratively controlled by procedures RP-RO-100 and OP-RP-250. The depth in the reactor pool at which the new fuel baskets will be located easily meet the minimum water shielding depth requirements listed in Section 6.4; therefore, the requirements of specification (c) are meet.

Attached are the results of calculations performed by the Assistant Reactor Manager-Physics using the Monte Carlo simulation program MCNP that was used to verify that the new fuel baskets have been "designed to be safe with regard to criticality" as specified in Section 13.2.11 of the HSR. The Keff value estimated by MCNP for the new configuration is 0.635, with a standard deviation of 0.002 - well below Technical Specification 3.8.d limit of 0.9. Using the most conservative approach and assumptions, the baskets were modeled using twenty (20) "fresh" 775 gram U-235 fuel elements - a far greater number of elements than what we are allowed to possess under our current inventory license limits. Additionally, the value of boral used to model the baskets was 0.0624 grams of B-10 atoms/cm2. None of the boral sheets that were used in the construction of the baskets had a value less than 0.0709 gms/cm2, and the average value of all sheets was 0.0740 gms/cm2. A 1/M criticality determination will also be made upon installation of the baskets to verify the results of the MCNP modeling. A Keff value of 0.635 easily meets the requirements of specification (a).

Modification Number: 91-3, Addendum 1

HAZARDS SUMMARY REPORT EVALUATION (con't)

Missouri University Research Reactor Design Data Volume I, Design Memoranda TM-RKD-62-9, "Thermal Shielding Requirements for Spent Fuel Storage Facilities," provides the thermal shielding thicknesses for spent fuel storage. Thermal shielding or appreciable water thickness must be provided around the spent fuel storage baskets to protect the magnetite concrete from damage due to thermal stresses and excessive temperatures. The thermal shielding requirements are based on radiation heating in the magnetite concrete and the resulting conditions within the concrete. The design criterion employed is that the temperature rise in the concrete should not exceed 30 degrees F.

Table 4-A, "Spent Fuel Storage Thermal Shield Requirements," of TM-RKD-62-9 indicates that fuel elements with a decay time of 1E6 seconds (11.6 days) require a minimum of 14-inches of thermal water shielding. The thickness requirements presented in this table are based on a configuration of a row of eight elements stored adjacent to the biological shield. Page 5 of TM-RHD-62-9 also states that "Alternate configurations will require less thermal shield thickness."

All fuel storage locations in the new X and Y baskets have a minimum of 14-inches of water shielding with the exception of X basket positions 15 through 20 and Y basket positions 11 and 16 through 20. These storage locations will be administratively controlled such that fuel elements can not be stored unless they have greater than 3E7 seconds (one year) of decay. Fuel elements with this decay time have a fission product activity, and hence gamma heating source, of approximately 1/20 of the activity of a fuel element with 1E6 seconds of decay. This number was obtained from J. Huang's Master Thesis, pages 11 and 12, which dealt with fuel elements in a 300 day cycle, 120 days of irradiation, 180 days out of the core, and alternating in and out. Graphs from J. Huang's Master Thesis that depict fuel element decay are included in Modification Record 91-3.

ATTACHMENT 6

AP-RO-115
Revision 1

Modification Number: 91-3, Addendum 1

REACTOR SAFETY EVALUATION

Does this change involve a revision(s) to the Technical Specifications or a safety hazard as described in 10 CFR 50.59?

NOTE: A licensee may make changes to the facility as described in the HSR without obtaining a license amendment only if:
(i) A change to the Technical Specifications incorporated in the license is not required, and
(ii) The change does not produce any of the following results:
1. More than a minimal increase in the frequency of occurrence of an accident previously evaluated in the HSR;
2. More than a minimal increase in the likelihood of occurrence of a malfunction of an SSC important to safety previously evaluated in the HSR;
3. More than a minimal increase in the consequences of an accident previously evaluated in the HSR;
4. More than a minimal increase in the consequences of a malfunction of an SSC important to safety previously evaluated in the HSR;
5. Create a possibility for an accident of a different type than previously evaluated in the HSR;
6. Create a possibility for a malfunction of an SSC important to safety with a different result than any previously evaluated in the HSR;
7. Altering or exceeding a design basis limit for a fission product barrier as described in the HSR;
8. A departure from a method of evaluation described in the HSR used in establishing the design bases or the safety analyses.

Yes: ____ No: ✓ Signature: [signature] Date: 2-8-04

If YES, the change must be performed using a Long Form Modification Record. If NO, outline the basis for the decision.

This modification does not involve a change to the Technical Specifications or a safety hazard as described in 10 CFR 50.59. A.50.59 Screen is attached and shows that the proposed activity does not have the potential to adversely affect nuclear safety or safe facility operations.

There are two Limiting Conditions for Operation (LCO) regarding MURR fuel: Technical Specifications 3.8.d and 3.8.e.

Technical Specification 3.8.d states that "All fuel elements or fueled devices outside the reactor core shall be stored in a geometry such that the calculated Keff is less than 0.9 under all conditions of moderation." The basis for this Specification states that this limit is conservative and assures safe fuel storage. The MCNP model was used to calculate a Keff value of 0.635 for one fuel basket fully loaded with twenty (20) "fresh" 775 gram U-235 fuel elements. This predicted value is well below the Technical Specification limit of 0.9. This value will also be validated by a 1/M criticality determination.

Technical Specification 3.8.e states that "Irradiated fuel elements shall be stored in an array which will permit sufficient natural convection cooling such that the fuel element temperature will not exceed design values." The design of the new fuel storage baskets is nearly identical to that of the original X, Y and Z baskets with regard to natural convection cooling. This satisfies the requirements of specification (b) stated in the Modification Description.

Modification Number: 91-3, Addendum 1

REACTOR SAFETY EVALUATION (con't)

Furthermore, the Safety Evaluation (SE) performed by the Test & Power Reactor Safety Branch of the Division of Reactor Licensing, documented by letter dated July 27, 1966, was in response to the request by the University of Missouri to operate the MURR at a power level of 5 MW. The SE identified the safety criteria for fuel storage and handling, as providing assurance of not having a critical fuel configuration, even with the unlikely mishap that might occur during fuel handling. The SE performed by the Directorate of Licensing, documented by letter dated May 24, 1974, supported MURR's request to operate at the higher power level of 10 MW. This SE did not elaborate any further on spent fuel storage. Additionally, the most recent facility operating license Amendment, Amendment No. 28 dated March 15, 1995, which involved an increase in the possession limit for U-235, stated that "No specific accidents in this type of research reactor are associated with the storage of spent fuel in accordance with the Technical Specifications."

ATTACHMENT 6

AP-RO-115
Revision 1

Modification Number: 91-3, Addendum 1

OPERATING, PREVENTATIVE MAINTENANCE, AND COMPLIANCE PROCEDURE, AND PRINT EVALUATION

Does this change require a revision(s) to any Operating, Preventative Maintenance, or Compliance Procedure, or any Print?

Yes: ✓ No: ____ Signature: [signature] Date: 2-8-04

If YES, provide the suggested revision(s):

This Modification Record does not require a revision to any Preventative Maintenance or Compliance Procedure. Two operating procedures and one form will require revisions: RP-RO-100, "Fuel Movement," OP-RO-250, "In-Pool Fuel Handling," and Form-08, "Fuel Movement Sheet." Suggested revisions to these procedures and form are listed below. New prints associated with the design and construction of the new fuel storage baskets will be maintained by Drafting.

Suggested revisions to RP-RO-100:

1. Revise Step 4.12 to read: "Irradiated fuel elements that have decayed for less than one year, must not be stored in the following deep pool storage positions for longer than 24 hours:
   X-15, 16, 17, 18, 19, 20, and
   Y-11, 16, 17, 18, 19, 20
2. Add a precaution to Section 4.0 that states: "Irradiated fuel elements that have decayed for less than two (2) weeks, must not be stored in the X and Y fuel storage baskets for longer than 24 hours."
3. Add a precaution to Section 4.0 that states: "This procedure only applies to 775 gram U-235 fuel elements. Movement of 1270 gram U-235 fuel elements is not authorized by this procedure."
4. Delete first note box on page 6 - this note is covered by suggested revision number 2 above.
5. Delete second caution box - no defective positions will exist.
6. Delete the words "MHX & MHY" from the bottom of Attachment 9.1 (Record 8.1).
7. Revise Record 8.2, "Fuel Location Map," to depict the new basket configurations.

Suggested revisions to OP-RO-250:

1. Revise Step 3.12 to read: "Irradiated fuel elements that have decayed for less than one year, must not be stored in the following deep pool storage positions for longer than 24 hours:
   X-15, 16, 17, 18, 19, 20, and
   Y-11, 16, 17, 18, 19, 20
2. Add a precaution to Section 3.0 that states: "Irradiated fuel elements that have decayed for less than two (2) weeks, must not be stored in the X and Y fuel storage baskets for longer than 24 hours."
3. Add a precaution to Section 3.0 that states: "This procedure only applies to 775 gram U-235 fuel elements. Movement of 1270 gram U-235 fuel elements is not authorized by this procedure."
4. Delete the words "MHX & MHY" from the bottom of Attachment 8.1.

Suggested revision to FM-08:

1. Delete the words "MHX & MHY" from the bottom of the form.

Additionally, a new reactor control room fuel status board has been ordered that depicts the new fuel storage configurations.

ATTACHMENT 6

AP-RO-115
Revision 1

Modification Number: 91-3, Addendum 1

SPARE PARTS REQUIREMENTS EVALUATION

Does this change require that any new or additional Spare Parts be maintained in inventory?

Yes: _____ No: ✓ Signature: _____ Date: 2-8-04

If YES, provide a list of the spare parts.

None required for this modification.

ATTACHMENT 6

COPY

AP-RR-003
Revision 1

50.59 SCREEN

Activity Screening Number: 04-1

Title: REDSIGNED DEEP POOL FUEL STORAGE BASKETS - MODIFICATION RECORD 91-3, ADDENDUM 1

Description of Activity *(what is being changed and why)*:
Replace the four currently installed deep pool fuel storage baskets designated X, MHX, Y, and MHY with two redesigned baskets that serve the same function.

Safety Determination:

Does the proposed activity have the potential to adversely affect nuclear safety or safe *facility* (i.e., MURR) operations? YES ✓ NO

If this question is answered yes, do not continue with this procedure. Identify and report the concern to the Reactor Manager.

50.59 Screening Questions:

1. Does the proposed activity involve a change to an *SSC* that adversely affects a *design function* described in the *HSR*? YES ✓ NO
2. Does the proposed activity involve a change to a *procedure* that adversely affects how *HSR* described *SSC* design functions are performed, controlled, or tested? YES ✓ NO
3. Does the proposed activity involve revising or replacing an *HSR* described evaluation methodology that is used in establishing the *design bases* or used in the *safety analyses*? YES ✓ NO
4. Does the proposed activity involve a *test or experiment not described in the HSR*, where an *SSC* is utilized or controlled in a manner that is outside the reference bounds of the design for that *SSC* or is inconsistent with analyses or descriptions in the *HSR*? YES ✓ NO
5. Does the proposed activity require a change to the MURR Technical Specifications? YES ✓ NO

If all screening questions are answered NO, then implement the activity per the applicable approved *facility procedure*(s). A License Amendment or a *50.59 Evaluation* is not required.

If Screen Question 5 is answered YES, then request and receive a License Amendment prior to implementation of the activity.

If Screen Question 5 is answered NO and Question 1, 2, 3, or 4 is answered YES, then complete and attach a *50.59 Evaluation* form. [Refer to Attachment 2.]

NOTE: If the conclusion of the screening questions is that a *50.59 Evaluation* is not required, provide justification for the "No" determination. In addition, list the documents (*HSR*, Technical Specifications, and other Licensing Basis documents) reviewed where relevant information was found. Include section / page numbers. Use page 2 of this form to document your statements.

	Print Name	Sign Name	Date
Preparer:	Edward L. Murphy	Edward L. Murphy	2/8/04
Reviewer:	VERNON L. JONES	[illegible]	2/10/04
Reactor Manager:	Les Foyto	[illegible]	2-11-04

ATTACHMENT 6

50.59 SCREEN (Cont.)

Activity Screening Number: 04-1

Title: REDSIGNED DEEP POOL FUEL STORAGE BASKETS

If the conclusion of the five (5) Screening Questions is that a *50.59 Evaluation* is not required, provide justification to support this determination: *[Use and attach additional pages as necessary.]*

1. Does the proposed activity involve a change to an *SSC* that adversely affects a *design function* described in the *HSR*?

No. The new deep pool fuel storage baskets do not affect any design function described in the HSR. The proposed design change allows only for better fuel storage cabability. The new baskets will perform, in an improved manner, the same function as those currently installed. No other systems or components will be affected by this modification.

2. Does the proposed activity involve a change to a *procedure* that adversely affects how *HSR* described *SSC* design functions are performed, controlled, or tested?

No. This modification is physical in nature. While minor administrastive changes will have to be made to current operating procedures, none of the changes involved will adversely affect the manner in which any HSR described SSC design functions are performed, controlled or tested.

3. Does the proposed activity involve revising or replacing an *HSR* described evaluation methodology that is used in establishing the *design bases* or used in the *safety analyses*?

No. The modification to the deep pool fuel storage baskets proposed was designed using established HSR described evaluation methodology to ensure that design bases were met, and fulfills all safety analysis requirements currently in force.

4. Does the proposed activity involve a *test or experiment not described in the HSR*, where an *SSC* is used or controlled in a manner that is outside the reference bounds of the design for that *SSC*, or is inconsistent with analyses or descriptions presented in the *HSR*?

No. The redesigned deep pool fuel storage baskets are functionally and operationally the same as those currently installed, and will be used and controlled only in a manner within design boundaries. All tests required for the proposed change are covered by, and are consistent with, all analyses and descriptions presented in the HSR.

List the documents (*HSR*, Technical Specifications, and other Licensing Basis documents) reviewed where relevant information was found. [Include section / page numbers.]

HSR Section 6.4 "Spent Fuel Transfer and Storage", HSR Section7.8.1 "Fuel Handling System", HSR Section 13.2.11 "Refueling Accident", Technical Specification 3.8.d "Fuel Element Storage Geometry", Technical Specification 3.8.e "Cooling Requirements for Fuel Element Storage", OP-RO-250 "Fuel Handling", RP-RO-100 "Fuel Movement"

Reset Form

ATTACHMENT 6

ORIGINAL

From: Das Kutikkad

To: Les Foyto, Acting Reactor manager, MURR

Date: June 05, 2003

Re: Results of Calculations Performed to Estimate the K_{eff} of the New Deep-Pool Fuel Storage Basket

Calculations were performed to estimate the criticality of the newly designed deep pool fuel storage basket slated to replace the X, MHX, Y and MHY baskets. The model used and the results obtained are summarized in this memo.

For the purpose of simplicity, only one of the new 20-element basket (on one side of the pool) was modeled. A drawing of the new basket is attached to this report. One such basket is expected to replace the combined X & MHX or the combined Y & MHY storage locations. Since the two sides of the pool are fairly decoupled neutronically (especially with the amount of boron in the storage baskets), this modeling should be adequate to establish the safe storage requirement specified in the Tech Specs.

Monte Carlo simulation program MCNP was used to model the new fuel storage basket and to estimate the criticality. Several conservative assumptions were used in the modeling such as using all fresh fuel elements (no burn up credit taken) and using a reduced thickness for boral in the outermost surfaces. A copy of the MCNP input file is also attached for future reference.

The current Z-basket fuel storage baskets have boral sandwiched between Al walls. The boral used is approximately 35 w% of B4C in boral (rest Al). For the new basket, we purchased boral that has less boron content. The boral used has 0.0624 grams of B-10 atoms/cm2. For a boral sheet of 0.265" thick (approx 0.67 cm), this translates to a B4C value of roughly 24 w%. The boron used is natural and not enriched in B-10. The dimensions of the basket and the wall thickness are shown the attached drawing.

The K_{eff} value estimated by the MCNP for this fuel storage configuration (loaded with fresh 775 g U235 fuel elements) was 0.635 with a standard deviation of 0.002. This result shows that it is safe to store fuel in the new basket with the predicted K_{eff} well below the Tech Spec limit of 0.9.

6	48	Alumin
7	10	Alumin

ATTACHMENT 6

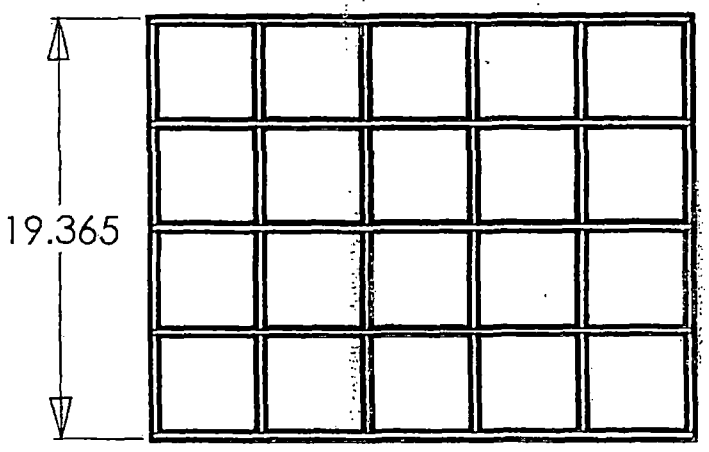

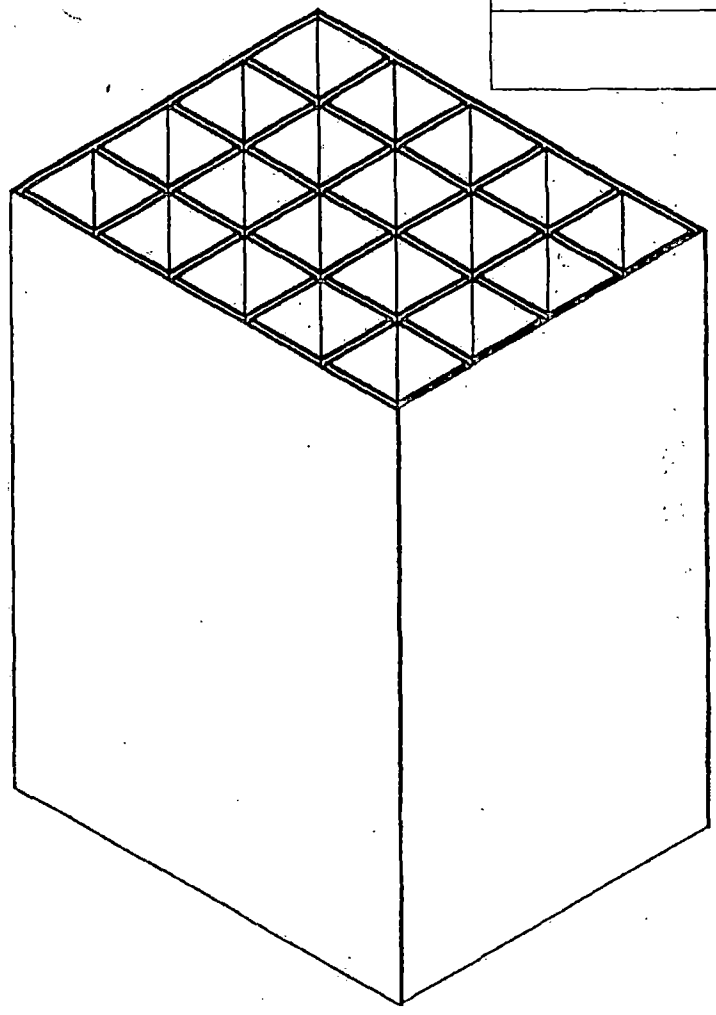

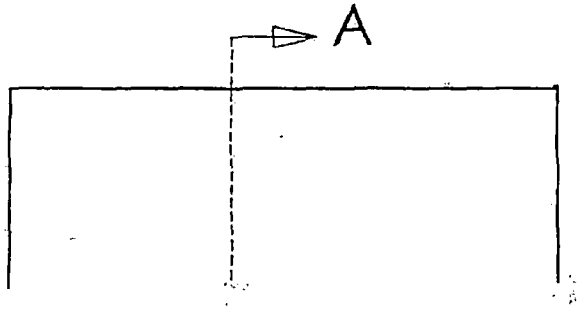

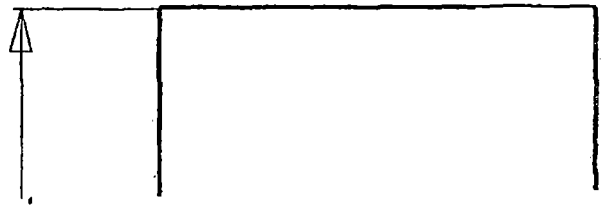

ATTACHMENT 6

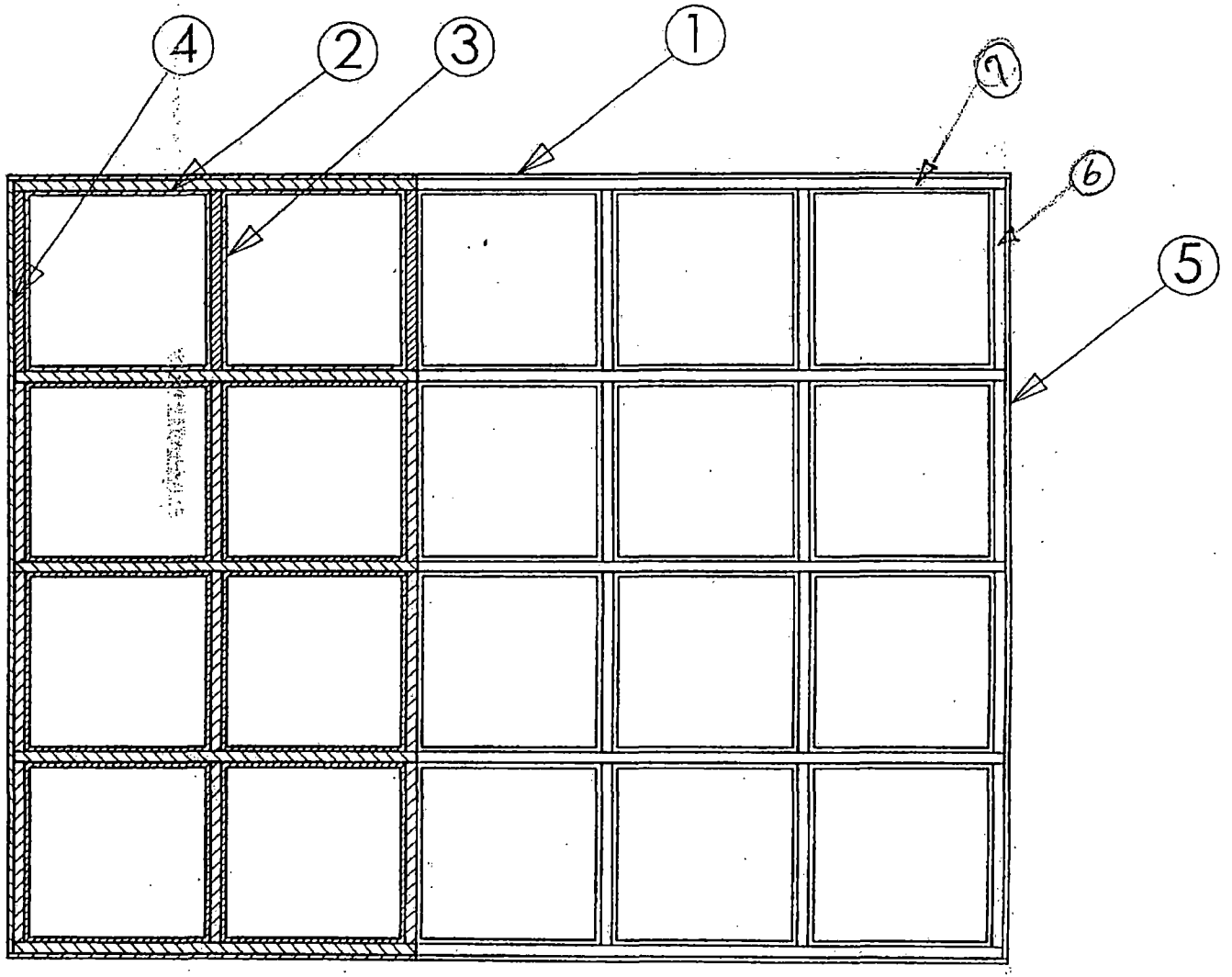

See next page too

SECTION A-A

REV.	DESCRIPTION	DATE

ATTACHMENT 6

NO.	QTY.	PART NO.	DESCRIPTION
1	2	Alu_sheet	1/8" 3003-H14 Alum. 24.39"x 33.25" x 1/8"
2	5	largeboral	0.265" ~~35%~~ B4C Boral stock 24.10"x 30" ~ 24 w/o B4C
3	20	4.5alumtube	4.51" Square 6063T6 Alum. tube 1/8" wall 33.25"long
4	24	smallboral	0.265" ~~35%~~ B4C boral 4.4375"x 30" ~ 24 w/o B4C
5	2	AL_sheet2	1/8" 3003H14 Alum. 19.615" x 33.25" x 1/8"
6	48	Aluminum stock	1/4" x4-7/16" x 1-3/8" Aluminum stock
7	10	Aluminum stock	1/4" x24.14" x 1-3/8" Aluminum stock

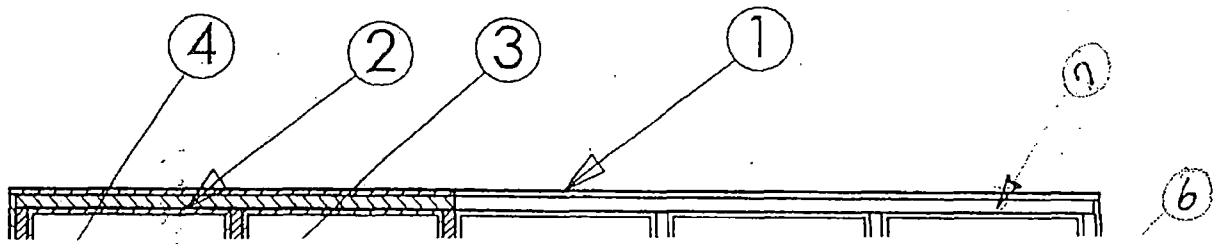

ATTACHMENT 6

```
modelling of the new 20-element deep pool fuel storage basket
c       this first run is a case with just the new 20-element basket
c       modelled (as a replacement for the existing mhy and y baskets).
c       subsequent runs will add the old beryllium next to this storage
c       basket (in place where os basket was before) to see its effect.
c       the core is not modelled in this case. so the storage basket
c       is a stand alone basket filled with fresh fuel elements.
c
c       a single fuel element is defined and the "repeated structure" feature
c       of mcnp is used to construct the storage positions (bins).
c       some conservatism is used during the initial runs. some of these will
c       be removed during later runs if the keff is found to be unacceptable
c       (i.e, >0.9). some of the conservative assumptions are listed below:
c
c       1) all fresh fuel considered - i.e., no burnup credit taken
c       2) less boral thickness for the outermost layers.
c
c       individual "bins" of the new basket are described in an auxiliary
c       coordinate system. the origin of this auxiliary coordinate system
c       is at the center of individual bins. These are then tranformed
c       into the main system centered at one corner of the basket. all the
c       bins are filled with the same "universe" (i.e., one fresh fuel
c       element plus water, aluminum and boral surrounding the fuel).
c
c       *** histories tracked = 100,000 for this case ***
c
1     1  -1.0  (-140:-146:150:144:-148:149) 130  -151  132  -153  154  -135
      imp:n=1  $ water surrounding the new basket (approx 30 cm thick)
c
c     the following four cells are created since mcnp doesn't like to
c     complicate any one cell too much. to avoid that problem, the new
c     basket is artificailly divided in the x-direction to group 5 "bins"
c     as one unit. this will avoid the problem of having 20 bins in one
c     basket (thereby complicating that one cell too much).
c
2     2  -2.7  140  -150  146  -141  148  -149   #20  #21  #22  #23  #24
          imp:n=1  $ basket that contins 5 "bins" along x-axis
3     2  -2.7  140  -150  141  -142  148  -149   #25  #26  #27  #28  #29
          imp:n=1  $ basket that contins 5 "bins" along x-axis
4     2  -2.7  140  -150  142  -143  148  -149   #30  #31  #32  #33  #34
          imp:n=1  $ basket that contins 5 "bins" along x-axis
5     2  -2.7  140  -150  143  -144  148  -149   #35  #36  #37  #38  #39
          imp:n=1  $ basket that contins 5 "bins" along x-axis
c
6     0   -130:-132:151:153:-154:135    imp:n=0   $ outside world
c
7     9  -2.64 -204:-206:205:207       u=1  imp:n=1  $ boral of the bins.
8     2  -2.7   204  -208  206  -207   u=1  imp:n=1  $ al of the bins
9     2  -2.7   209  -205  206  -207   u=1  imp:n=1  $ al of the bins
10    2  -2.7   208  -209  206  -210   u=1  imp:n=1  $ al of the bins
11    2  -2.7   208  -209  211  -207   u=1  imp:n=1  $ al of the bins
c
c     although infinite in dimension, the boral thickness will be limited
c     by the dimensions of the cell that is filled with this "universe 1".
c
12    0   208  -209  210  -211  u=1  imp:n=1  fill=2  (-11.00  0  0)
c
20    0   200  -201  202  -203  148  -149  imp:n=1  trcl=20   fill=1
      above is the definition of a single "bin" that is repeated 20 times
c
```

ATTACHMENT 6

```
21    like 20  but trcl=21
22    like 20  but trcl=22
23    like 20  but trcl=23
24    like 20  but trcl=24
25    like 20  but trcl=25
26    like 20  but trcl=26
27    like 20  but trcl=27
28    like 20  but trcl=28
29    like 20  but trcl=29
30    like 20  but trcl=30
31    like 20  but trcl=31
32    like 20  but trcl=32
33    like 20  but trcl=33
34    like 20  but trcl=34
35    like 20  but trcl=35
36    like 20  but trcl=36
37    like 20  but trcl=37
38    like 20  but trcl=38
39    like 20  but trcl=39
c
c       description of the fuel plates of a single element starts from here
c       this is the "universe-2" that fills the new storage basket bins.
c
101   2  -2.7    -4   3   102 -101 -124  125  imp:n=1  u=2  $ pl 1 clad
102   2  -2.7    -5   4   102 -101 -124  126  imp:n=1  u=2  $ pl 1 clad
103   2  -2.7    -5   4   102 -101 -127  125  imp:n=1  u=2  $ pl 1 clad
104   2  -2.7    -6   3   101 -103 -124  125  imp:n=1  u=2  $ pl 1 clad on top
105   2  -2.7    -6   3   104 -102 -124  125  imp:n=1  u=2  $ pl 1 clad on bot
106   3  -3.88   -5   4   102 -101 -126  127  imp:n=1  u=2  $ pl 1 fuel
107   2  -2.7    -6   5   102 -101 -124  125  imp:n=1  u=2  $ pl 1 clad
108   1  -1.00   -7   6   104 -103 -124  125  imp:n=1  u=2  $ pl 2 wg
109   2  -2.7    -8   7   102 -101 -124  125  imp:n=1  u=2  $ pl 2 clad
110   2  -2.7    -9   8   102 -101 -124  126  imp:n=1  u=2  $ pl 2 clad
283   2  -2.7   -94  93   102 -101 -124  125  imp:n=1  u=2  $ pl 23 clad
284   1  -1.00  -95  94   104 -103 -124  125  imp:n=1  u=2  $ pl 24 wg
285   2  -2.7   -96  95   102 -101 -124  125  imp:n=1  u=2  $ pl 24 clad
286   2  -2.7   -97  96   102 -101 -124  126  imp:n=1  u=2  $ pl 24 clad
287   2  -2.7   -97  96   102 -101 -127  125  imp:n=1  u=2  $ pl 24 clad
288   2  -2.7   -98  95   101 -103 -124  125  imp:n=1  u=2  $ pl 24 clad on top
289   2  -2.7   -98  95   104 -102 -124  125  imp:n=1  u=2  $ pl 24 clad on bot
290   3  -3.88  -97  96   102 -101 -126  127  imp:n=1  u=2  $ pl 24 fuel
291   2  -2.7   -98  97   102 -101 -124  125  imp:n=1  u=2  $ pl 24 clad
c
292   1  -1.0   -98  3    103 -105 -124  125  imp:n=1  u=2  $ fuel top water
293   1  -1.0   -98  3    106 -104 -124  125  imp:n=1  u=2  $ fuel bot water
294   6  +0.0803 -98  3   105 -107 -124  125  imp:n=1  u=2  $ fuel top hanger
295   6  +0.0803 -98  3   108 -106 -124  125  imp:n=1  u=2  $ fuel bot hanger
c
c       side plates of the element are described next
c
296   2  -2.7    -98  3    108 -107 -122  124   imp:n=1 u=2  $ side plate no.1
297   2  -2.7    -98  3    108 -107 -125  123   imp:n=1 u=2  $ side plate no.2
c
c       the water surrounding the fuel element is described next. this will
c       become a finite amount of water once this "universe 2" (single
c       fresh fuel element plus the water surrounding it) is filled in cells
c       representing the "bins" of the new storage basket.
c
298   1  -1.0  107:98:-123:-3:122:-108  u=2 imp:n=1 $water surrounding fuel
c
c       * * * end of cell definitions * * * need the following blank line.
```

Details of single fuel element plates eliminated from this printout to reduce size!

ATTACHMENT 6

```
c     the following surfaces define the single fuel element (origin of this
c     coordinate system different from the main one and from the auxiliary
c     coordinate system # 1 that defines the bins of the new basket).
c
c
3       cz  7.036   $ plate 1
4       cz  7.074
5       cz  7.125
95      cz  14.630  $ plate 24
96      cz  14.668
97      cz  14.719
98      cz  14.757
c       99     cz   14.986
c       100    pz    0
101     pz  30.48
102     pz -30.48
103     pz  32.385
104     pz -32.385
105     pz  38.10
106     pz -38.10
107     pz  41.275
108     pz -41.275
c
c
120     p  -0.4142  1  0   0.0    $  22.5 degree plane
121     p   0.4142  1  0   0.0    $ -22.5 degree plane
c
122     p  -0.4142  1  0  -0.0550     $ part of +22.5 degree side plate
123     p   0.4142  1  0   0.0550     $ part of -22.5 degree side plate
124     p  -0.4142  1  0  -0.4674     $ part of +22.5 degree side plate
125     p   0.4142  1  0   0.4674     $ part of -22.5 degree side plate
126     p  -0.4142  1  0  -0.6598     $ part of +22.5 degree side plate
127     p   0.4142  1  0   0.6598     $ part of -22.5 degree side plate
c
c
130    px  -30.0
131    px   68.10
132    py  -30.0
133    py   80.80
134    pz  -80.0
135    pz   80.0
c
140    px   0.0
141    py   13.00
142    py   26.00
143    py   39.00
144    py   52.00
145    px   38.10
146    py   0.0
147    py   50.80
148    pz  -42.25
149    pz   42.25
c
150    px   64.50
151    px   94.50
152    py   55.50
153    py   82.00
154    pz  -50.00
c
```

ATTACHMENT 6

```
c     the following surfaces define the auxiliary coordinate system that
c     defines the individual bins of the new basket. its origin is at the
c     center of each bin. a coordinate transformation then connects
c     this to the main coordinate system - which is centred at one of the
c     corners of the new basket.
c
200    px  -6.38
201    px   6.38
202    py  -6.38
203    py   6.38
204    px  -6.07
205    px   6.07
206    py  -6.07
207    py   6.07
208    px  -5.75
209    px   5.75
210    py  -5.75
211    py   5.75
c

mode   n
c
c      imp:n  1  18r  0.0    1  197r
c
kcode  2000   0.8   5  55   3000   0
c
m1     1001.50c .6667   8016.50c .3333
mt1    lwtr.01
m2     13027.50c  1
m3     13027.50c  -.600
       92235.50c  -.372
       92238.50c  -.028
c      m4    4009.50c   1
c      mt4   be.01
c      m5    6012.50c   -.85
c            1001.50c   -.002
c            8016.50c   -.016
c            13027.50c  -.132
c      mt5   grph.01
m6     1001.50c  0.4170   8016.50c  0.208    13027.50c  0.3750
mt6    lwtr.01
c      m8    26000.50c  0.7   24000.50c  0.2   28000.50c  0.1
m9     5010.50c -0.035   5011.56c -0.150
       6000.50c -0.052  13027.50c -0.763  $ boral with 24 w% b4c
c
c
tr20    6.40   6.50  0.0
tr21   19.20   6.50  0.0
tr22   32.00   6.50  0.0
tr23   44.80   6.50  0.0
tr24   57.60   6.50  0.0
tr25    6.40  19.50  0.0
tr26   19.20  19.50  0.0
tr27   32.00  19.50  0.0
tr28   44.80  19.50  0.0
tr29   57.60  19.50  0.0
tr30    6.40  32.50  0.0
tr31   19.20  32.50  0.0
tr32   32.00  32.50  0.0
 r33   44.80  32.50  0.0
cr34   57.60  32.50  0.0
```

ATTACHMENT 6

```
tr35     6.40   45.50   0.0
tr36    19.20   45.50   0.0
tr37    32.00   45.50   0.0
tr38    44.80   45.50   0.0
tr39    57.60   45.50   0.0
c
phys:n 15.0   0.0   $cross sections above 15.0 mev will be expunged
print   40   50   60   90   110   120   126
ctme    5000
cut:n   j     0.0   -0.5   -0.1
prdmp   j     20
ksrc    10.0 4.0   0.0   18.0   2.0 0.0   34.0   4.5   0.0   55.0   8.0    0.0
        8.0  16.5 0.0   21.0 20.9 0.0   30.0 18.0   0.0   47.0   22.0   0.0
        3.0  30.0 0.0   17.0 33.0 0.0   32.0 29.0   0.0   59.0   34.0   0.0
        3.0  3.50 0.0   4.00 2.00 0.0 -3.50 -3.50 0.0   1.50 -1.00   0.0
```

ATTACHMENT 6

COPY

AAR CARGO SYSTEMS

a division of AAR Manufacturing, Inc.

Jeff Moore, Sr. Manager – Nuclear Products
12633 Inkster Road, Livonia, MI 48150-2272 USA
Phone: (734) 522-2000 Direct: (734) 466-8110
FAX: (734) 522-2240 email: jmoore@aarcorp.com

I. CUSTOMER:
- A. NAME: University of Missouri
- B. REQUEST DATE: April 8, 2003

II. DATES
- A. CURRENT DATE: April 30, 2003
- B. QUOTATION VALID FOR: 90 days

III. CONTACTS
- A. AAR CONTACT
  - 1. NAME: Jeff Moore
  - 2. TITLE: Sr. Manager, Nuclear Products
  - 3. PHONE: (734) 522-2000 x 8110
  - 4. FACSIMILE: (734) 522-2240
- B. CUSTOMER CONTACT
  - 1. NAME: Mr. Jeff Attebery
  - 2 PHONE: 1-573-882-5269
  - 3. FACSIMILE: 1-573-882-6360

IV. SPECIFICATION AND PRICING

Item #	Quantity	Length +0.15 -0.1	Width +0.062 -0.062	Thickness 0.007	^{10}B content (gm/cm^2) Minimum	Price each (USD)
1	20	30.00	12.05	.265	.0624	$350.00
2	48	30.00	4.438	.265	.0624	$175.00

+ Shipping to Univ. of Missouri 4%

V. DELIVERIES TO COMMENCE: 60 days ARO

VI. TERMS
- A. DELIVERY POINT: FOB University of Missouri
- B. PAYMENT: Net 30 days

VII. SPECIAL INSTRUCTIONS None

ATTACHMENT 6

COPY

AAR CARGO SYSTEMS

A division of AAR Manufacturing Group, INC.

CERTIFICATE OF COMPLIANCE

CUSTOMER: University of Missouri

QTY. SHIPPED: 68 pcs.

DATE OF SHIPMENT: July 18, 2003

CUSTOMER P.O. NUMBER: C0000009743

AAR CARGO SYSTEMS SALES ORDER NUMBER: 5053667

This is to certify that the material supplied hereunder has been inspected and tested in accordance with AAR-11002 QAP, Revision 23 dated November 7, 2002, and AAR-10012 QAP, Revision 18 dated April 9, 2003, and Nuclear Quality Program Manual, Revision 29 and meets the requirements of the purchase order. The Code of Federal Regulations 10CFR50 Appendix B and 10CFR21 are applicable to the material on this order.

SIGNATURE: Phill Pusilo

TITLE: Lab Manager

DATE: July 18, 2003

Appendix C
AAR-10012 QAP
Page 1 of 1

...systems, components & more

12633 Inkster Road Livonia Michigan 48150-2272 USA
Telephone 1-734-522-2000 Fax 1-734-522-2240

ATTACHMENT 6

COPY

AAR CARGO SYSTEMS

A division of AAR Manufacturing Group, INC.

BORAL DATA PACKAGE RECORD CHECKLIST

SPECIFICATION: AAR-10012 QAP, REV. 17 (07/18/03)

DOCUMENT	CHECKED BY	DATE
Record Checklist	JP/KE	7-18-03
Certificate of Compliance	JP/KE	7-18-03
Inspection Data Sheets	JP/KE	7-18-03
Material Certifications	JP/KE	7-18-03
Boral Summary Report	JP/KE	7-18-03
Boxing List	JP/KE	7-18-03
Calibrated Equipment Data Sheet	JP/KE	7-18-03

REVIEWED BY: Phill Pusilo

TITLE: Lab Manager

DATE: July 18, 2003

APPENDIX D
AAR-10012 QAP
PAGE 1 OF 1

...systems, components & more

12633 Inkster Road Livonia Michigan 48150-2272 USA
Telephone 1-734-522-2000 Fax 1-734-522-2240

ATTACHMENT 6

COPY

Boral Summary Report (Pass)

Job Name: University
SO 5053667

Serial Number	Lot Number	10B gms/cm2	Density
WM010013-3A	M-218	0.0740	2.5731
WM010014-1B	M-218	0.0721	2.5507
WM010015-3A	M-218	0.0709	2.5474
WM010016-1A	M-218	0.0766	2.5484
WM010017-2A	M-218	0.0726	2.5427
YM010018-2A	M-220	0.0754	2.6582
YM010019-1B	M-220	0.0758	2.5632
YM010020-8B	M-220	0.0731	2.5781
YM010021-8B	M-220	0.0748	2.5728
YM010022-8B	M-220	0.0750	2.5623
YM010023-8A	M-220	0.0733	2.5847
YM010024-8B	M-220	0.0742	2.5873

Reviewed By: Phill Pusilo
Title: Lab Manager
Date: 8/11/2003
Appendix A
AAR10012QAP

ATTACHMENT 6

COPY

MATERIAL TRACEABILETY by BORAL® SERIAL NUMBER
S.O. # 5053667 University of Missouri

BORON CARBIDE	LOT NUMBERS
WM010013 through WM010017	M-218
YM010018 through YM010024	M-220
ALUMINUM EXTRUSION	**LOT NUMBERS**
WM010013 through YM010024	AL03-03
ALUMINUM POWDER	**LOT NUMBERS**
WM010013 through YM010024	3-045-C

ATTACHMENT 7

Volume of the Primary Coolant System

In-Pool Portion				Mechanical Equipment Room 114 Portion			
Section	**Area (ft^2)**	**Length (ft)**	**Volume (ft^3)**	**Section**	**Area (ft^2)**	**Length (ft)**	**Volume (ft^3)**
135(5)	0.7773	3.828	2.976	133(2-3)	0.7773	10.194	7.924
135(6)	0.7773	3.708	2.882	135(1)	0.7773	2.000	1.555
135(7)	0.7773	3.708	2.882		0.7773	22.374	17.391
137	0.7773	3.250	2.526	133(7-5)	0.7773	22.374	17.391
139	0.7773	2.500	1.943	133(4-3)	0.7773	14.290	11.108
501	0.6048	5.937	3.591	133(2-1)	0.7773	15.584	12.113
575	0.6048	2.269	1.372	132	0.6948	6.000	4.169
100(2)	0.7773	4.917	3.822	131(3-2)	0.6948	4.969	3.452
100(3)	0.7773	4.917	3.822	115(3-2)	0.6948	14.968	10.400
101	0.7773	1.000	0.777	115(1)	0.4948	2.000	0.990
102(1)	0.7773	1.000	0.777	111(7)	0.6948	4.189	2.911
102(2)	0.7773	3.806	2.958	111(6)	0.6948	6.667	4.632
102(3)	0.7773	3.806	2.958	111(2-5)	0.6945	16.264	11.295
102(4)	0.7773	3.806	2.958	111(1)	0.6948	2.167	1.506
102(5)	0.7773	5.097	3.962	105(9)	0.7773	2.167	1.684
401(1)	0.2006	3.975	0.797	105(7-8)	0.7773	17.312	13.457
401(2)	0.2006	3.975	0.797	105(5-6)	0.7773	15.542	12.081
405(1)	3.2150	0.500	1.608	105(1-4)	0.7773	31.832	24.743
405(2)	0.1389	4.708	0.654	102(7)	0.7773	2.000	1.555
405(3)	0.2006	9.163	1.838	102(5-6)	0.7773	10.194	7.924
460	1.3960	4.242	5.922	Total Piping Volume (ft^3)			223.860
406	0.7773	2.500	1.943				
407	0.7773	2.333	1.813	Total Piping Volume (gallons)			1,674.585
				Fuel Region (gallons)			7.176
				Primary Circulation Pumps (gallons)			25.000
				Primary Heat Exchangers (gallons)			150.000
				Pressurizer (gallons)			150.000
				Total Volume of PCS (gallons)			**2,006.761**

ATTACHMENT 8

ELECTRONIC CODE OF FEDERAL REGULATIONS

e-CFR data is current as of September 21, 2015

Title 10 → Chapter III → Part 835 → Subpart N → Appendix

Title 10: Energy
PART 835—OCCUPATIONAL RADIATION PROTECTION
Subpart N—Emergency Exposure Situations

APPENDIX C TO PART 835—DERIVED AIR CONCENTRATION (DAC) FOR WORKERS FROM EXTERNAL EXPOSURE DURING IMMERSION IN A CLOUD OF AIRBORNE RADIOACTIVE MATERIAL

a. The data presented in appendix C are to be used for controlling occupational exposures in accordance with §835.209, identifying the need for air monitoring in accordance with §835.403 and identifying the need for posting of airborne radioactivity areas in accordance with §835.603(d).

b. The air immersion DAC values shown in this appendix are based on a stochastic dose limit of 5 rems (0.05 Sv) per year. Four columns of information are presented: (1) Radionuclide; (2) half-life in units of seconds (s), minutes (min), hours (h), days (d), or years (yr); (3) air immersion DAC in units of μCi/mL; and (4) air immersion DAC in units of Bq/m3. The data are listed by radionuclide in order of increasing atomic mass. The air immersion DACs were calculated for a continuous, nonshielded exposure via immersion in a semi-infinite cloud of airborne radioactive material. The DACs listed in this appendix may be modified to allow for submersion in a cloud of finite dimensions.

c. The DAC values are given for individual radionuclides. For known mixtures of radionuclides, determine the sum of the ratio of the observed concentration of a particular radionuclide and its corresponding DAC for all radionuclides in the mixture. If this sum exceeds unity (1), then the DAC has been exceeded. For unknown radionuclides, the most restrictive DAC (lowest value) for those isotopes not known to be absent shall be used.

AIR IMMERSION DAC

Radionuclide	Half-life	(μCi/mL)	(Bq/m^3)
Ar-37	35.02 d	3E+00	1E+11
Ar-39	269 yr	1E-03	5E+07
Ar-41	1.827 h	3E-06	1E+05
Kr-74	11.5 min	3E-06	1E+05
Kr-76	14.8 h	1E-05	3E+05
Kr-77	74.7 min	4E-06	1E+05
Kr-79	35.04 h	1E-05	6E+05
Kr-81	2.1E+05 yr	7E-04	2E+07
Kr-83m	1.83 h	7E-02	2E+09
Kr-85	10.72 yr	7E-04	2E+07
Kr-85m	4.48 h	2E-05	1E+06
Kr-87	76.3 min	4E-06	1E+05
Kr-88	2.84 h	1E-06	7E+04
Xe-120	40.0 min	1E-05	4E+05
Xe-121	40.1 min	2E-06	8E+04
Xe-122	20.1 h	8E-05	3E+06
Xe-123	2.14 h	6E-06	2E+05
Xe-125	16.8 h	1E-05	6E+05
Xe-127	36.406 d	1E-05	6E+05
Xe-129m	8.89 d	2E-04	7E+06
Xe-131m	11.84 d	5E-04	1E+07
Xe-133	5.245 d	1E-04	5E+06
Xe-133m	2.19 d	1E-04	5E+06
Xe-135	9.11 h	1E-05	6E+05
Xe-135m	15.36 min	1E-05	3E+05
Xe-138	14.13 min	3E-06	1E+05

For any single radionuclide not listed above with decay mode other than alpha emission or spontaneous fission and

ATTACHMENT 8

with radioactive half-life less than two hours, the DAC value shall be 6 E-06 μCi/mL (2 E+04 Bq/m^3).

[72 FR 31940, June 8, 2007, as amended at 76 FR 20489, Apr. 13, 2011]

Need assistance?

MicroShield 8.02
Nathan Hogue (8.00-0000)

Date	By	Checked
9-29-15	N. Hogue	

Filename	Run Date	Run Time	Duration
Contain1.msd	September 29, 2015	1:21:55 PM	00:00:00

Project Info	
Case Title	Containment Shine
Description	Fuel Handling Accident Analyses
Geometry	13 - Rectangular Volume

Source Dimensions	
Length	1.8e+3 cm (60 ft 0.1 in)
Width	1.8e+3 cm (60 ft 0.1 in)
Height	1.8e+3 cm (60 ft 0.1 in)

Dose Points			
A	X	Y	Z
#1	1.9e+3 cm (62 ft 0.1 in)	914.0 cm (29 ft 11.8 in)	914.0 cm (29 ft 11.8 in)
#2	1.5e+4 cm (492 ft 1.5 in)	914.0 cm (29 ft 11.8 in)	914.0 cm (29 ft 11.8 in)

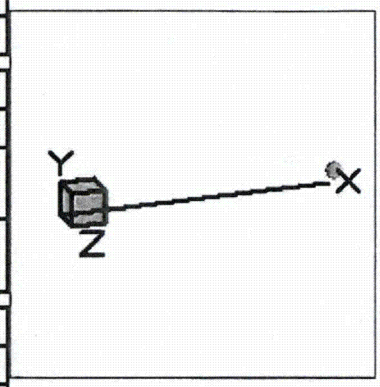

Shields			
Shield N	Dimension	Material	Density
Source	6.12e+09 cm³	Air	0.00122
Shield 1	30.5 cm	Concrete	2.35
Air Gap		Air	0.00122

Source Input: Grouping Method - Standard Indices
Number of Groups: 25
Lower Energy Cutoff: 0.015
Photons < 0.015: Included
Library: Grove

Nuclide	Ci	Bq	µCi/cm³	Bq/cm³
I-131	8.9329e+000	3.3052e+011	1.4600e-003	5.4020e+001
I-132	2.4168e+001	8.9421e+011	3.9500e-003	1.4615e+002
I-133	5.0905e+001	1.8835e+012	8.3200e-003	3.0784e+002
I-134	5.2252e+001	1.9333e+012	8.5400e-003	3.1598e+002
I-135	4.5644e+001	1.6888e+012	7.4600e-003	2.7602e+002
Kr-85	2.2271e-003	8.2403e+007	3.6400e-007	1.3468e-002
Kr-85m	1.1625e+001	4.3013e+011	1.9000e-003	7.0300e+001
Kr-87	1.5051e+001	5.5690e+011	2.4600e-003	9.1020e+001
Kr-88	2.4596e+001	9.1006e+011	4.0200e-003	1.4874e+002
Kr-89	5.0416e-002	1.8654e+009	8.2400e-006	3.0488e-001
Kr-90	6.0083e-016	2.2231e-005	9.8200e-020	3.6334e-015

Xe-133	2.4596e+001	9.1006e+011	4.0200e-003	1.4874e+002
Xe-135	1.0157e+001	3.7579e+011	1.6600e-003	6.1420e+001
Xe-135m	4.3196e+000	1.5983e+011	7.0600e-004	2.6122e+001
Xe-137	2.1292e-001	7.8781e+009	3.4800e-005	1.2876e+000
Xe-138	1.1013e+001	4.0749e+011	1.8000e-003	6.6600e+001

Buildup: The material reference is Shield 1	
Integration Parameters	
X Direction	10
Y Direction	20
Z Direction	20

Results - Dose Point # 1 - (1890,914,914) cm

Energy (MeV)	Activity (Photons/sec)	Fluence Rate MeV/cm²/sec No Buildup	Fluence Rate MeV/cm²/sec With Buildup	Exposure Rate mR/hr No Buildup	Exposure Rate mR/hr With Buildup
0.015	1.997e+11	8.577e-253	2.641e-24	7.357e-254	2.266e-25
0.03	5.752e+11	6.299e-35	2.648e-23	6.242e-37	2.624e-25
0.08	3.426e+11	1.284e-04	3.213e-03	2.031e-07	5.084e-06
0.1	1.795e+09	8.335e-06	3.131e-04	1.275e-08	4.791e-07
0.15	4.738e+11	3.531e-02	1.778e+00	5.814e-05	2.928e-03
0.2	6.841e+11	2.179e-01	1.067e+01	3.845e-04	1.883e-02
0.3	3.207e+11	6.259e-01	2.298e+01	1.187e-03	4.359e-02
0.4	1.055e+12	6.904e+00	1.867e+02	1.345e-02	3.638e-01
0.5	2.408e+12	3.898e+01	8.084e+02	7.652e-02	1.587e+00
0.6	1.884e+12	6.256e+01	1.036e+03	1.221e-01	2.021e+00
0.8	4.714e+12	4.684e+02	5.470e+03	8.909e-01	1.040e+01
1.0	1.860e+12	4.187e+02	3.760e+03	7.717e-01	6.931e+00
1.5	1.544e+12	1.406e+03	8.149e+03	2.365e+00	1.371e+01
2.0	1.110e+12	2.482e+03	1.108e+04	3.838e+00	1.713e+01
3.0	8.507e+10	5.850e+02	1.898e+03	7.936e-01	2.575e+00
4.0	8.353e+07	1.155e+00	3.087e+00	1.429e-03	3.819e-03
Totals	**1.726e+13**	**5.470e+03**	**3.242e+04**	**8.875e+00**	**5.479e+01**

Results - Dose Point # 2 - (15000,914,914) cm

Energy (MeV)	Activity (Photons/sec)	Fluence Rate MeV/cm²/sec No Buildup	Fluence Rate MeV/cm²/sec With Buildup	Exposure Rate mR/hr No Buildup	Exposure Rate mR/hr With Buildup
0.015	1.997e+11	1.798e-263	1.169e-26	1.543e-264	1.003e-27
0.03	5.752e+11	6.868e-38	1.172e-25	6.807e-40	1.162e-27
0.08	3.426e+11	4.039e-07	1.139e-05	6.392e-10	1.802e-08
0.1	1.795e+09	2.705e-08	1.190e-06	4.139e-11	1.821e-09
0.15	4.738e+11	1.274e-04	7.800e-03	2.098e-07	1.284e-05
0.2	6.841e+11	8.648e-04	5.172e-02	1.526e-06	9.128e-05
0.3	3.207e+11	2.857e-03	1.255e-01	5.419e-06	2.380e-04
0.4	1.055e+12	3.451e-02	1.091e+00	6.725e-05	2.125e-03
0.5	2.408e+12	2.079e-01	4.939e+00	4.082e-04	9.695e-03

0.6	1.884e+12	3.501e-01	6.536e+00	6.834e-04	1.276e-02
0.8	4.714e+12	2.798e+00	3.584e+01	5.322e-03	6.817e-02
1.0	1.860e+12	2.610e+00	2.523e+01	4.811e-03	4.651e-02
1.5	1.544e+12	9.284e+00	5.623e+01	1.562e-02	9.461e-02
2.0	1.110e+12	1.684e+01	7.709e+01	2.604e-02	1.192e-01
3.0	8.507e+10	4.061e+00	1.323e+01	5.510e-03	1.795e-02
4.0	8.353e+07	8.082e-03	2.146e-02	9.998e-06	2.655e-05
Totals	**1.726e+13**	**3.620e+01**	**2.204e+02**	**5.848e-02**	**3.714e-01**

ATTACHMENT 9

MicroShield 8.02
Nathan Hogue (8.00-0000)

Date	By	Checked
9-29-15	N. Hogue	

Filename	Run Date	Run Time	Duration
Contain1.msd	September 29, 2015	1:23:52 PM	00:00:00

Project Info	
Case Title	Containment Shine
Description	Fuel Element Failure Accident Analyses
Geometry	13 - Rectangular Volume

Source Dimensions	
Length	1.8e+3 cm (60 ft 0.1 in)
Width	1.8e+3 cm (60 ft 0.1 in)
Height	1.8e+3 cm (60 ft 0.1 in)

Dose Points			
A	X	Y	Z
#1	1.9e+3 cm (62 ft 0.1 in)	914.0 cm (29 ft 11.8 in)	914.0 cm (29 ft 11.8 in)
#2	1.5e+4 cm (492 ft 1.5 in)	914.0 cm (29 ft 11.8 in)	914.0 cm (29 ft 11.8 in)

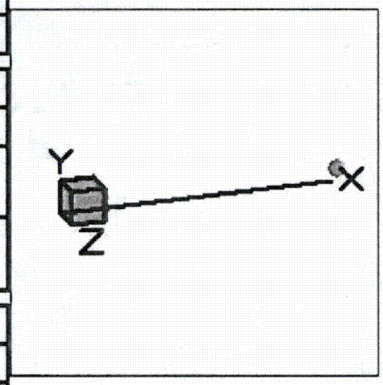

Shields			
Shield N	Dimension	Material	Density
Source	6.12e+09 cm³	Air	0.00122
Shield 1	30.5 cm	Concrete	2.35
Air Gap		Air	0.00122

Source Input: Grouping Method - Standard Indices
Number of Groups: 25
Lower Energy Cutoff: 0.015
Photons < 0.015: Included
Library: Grove

Nuclide	Ci	Bq	µCi/cm³	Bq/cm³
I-131	1.3399e-001	4.9578e+009	2.1900e-005	8.1030e-001
I-132	2.6003e-001	9.6213e+009	4.2500e-005	1.5725e+000
I-133	4.0198e-001	1.4873e+010	6.5700e-005	2.4309e+000
I-134	4.9682e-001	1.8382e+010	8.1200e-005	3.0044e+000
I-135	4.0932e-001	1.5145e+010	6.6900e-005	2.4753e+000
Kr-85	6.0940e-004	2.2548e+007	9.9600e-008	3.6852e-003
Kr-85m	1.4256e-001	5.2747e+009	2.3300e-005	8.6210e-001
Kr-87	2.7288e-001	1.0097e+010	4.4600e-005	1.6502e+000
Kr-88	3.8852e-001	1.4375e+010	6.3500e-005	2.3495e+000
Kr-89	4.9253e-001	1.8224e+010	8.0500e-005	2.9785e+000
Kr-90	4.9253e-001	1.8224e+010	8.0500e-005	2.9785e+000

Xe-133	5.4454e-001	2.0148e+010	8.9000e-005	3.2930e+000
Xe-135	1.2482e-001	4.6182e+009	2.0400e-005	7.5480e-001
Xe-135m	1.2176e-001	4.5050e+009	1.9900e-005	7.3630e-001
Xe-137	6.3632e-001	2.3544e+010	1.0400e-004	3.8480e+000
Xe-138	6.7303e-001	2.4902e+010	1.1000e-004	4.0700e+000

Buildup: The material reference is Shield 1 Integration Parameters	
X Direction	10
Y Direction	20
Z Direction	20

Results - Dose Point # 1 - (1890,914,914) cm					
Energy (MeV)	**Activity (Photons/sec)**	**Fluence Rate MeV/cm²/sec No Buildup**	**Fluence Rate MeV/cm²/sec With Buildup**	**Exposure Rate mR/hr No Buildup**	**Exposure Rate mR/hr With Buildup**
0.015	5.847e+09	2.512e-254	7.735e-26	2.154e-255	6.635e-27
0.03	1.247e+10	1.365e-36	5.739e-25	1.353e-38	5.688e-27
0.08	7.524e+09	2.819e-06	7.055e-05	4.460e-09	1.116e-07
0.1	6.447e+09	2.994e-05	1.125e-03	4.580e-08	1.721e-06
0.15	6.836e+09	5.094e-04	2.565e-02	8.388e-07	4.224e-05
0.2	1.617e+10	5.150e-03	2.522e-01	9.089e-06	4.451e-04
0.3	1.051e+10	2.051e-02	7.532e-01	3.891e-05	1.429e-03
0.4	2.244e+10	1.468e-01	3.969e+00	2.860e-04	7.733e-03
0.5	3.752e+10	6.074e-01	1.259e+01	1.192e-03	2.472e-02
0.6	2.587e+10	8.590e-01	1.422e+01	1.677e-03	2.775e-02
0.8	5.049e+10	5.017e+00	5.859e+01	9.542e-03	1.114e-01
1.0	3.060e+10	6.885e+00	6.184e+01	1.269e-02	1.140e-01
1.5	2.473e+10	2.251e+01	1.305e+02	3.787e-02	2.195e-01
2.0	2.762e+10	6.174e+01	2.755e+02	9.547e-02	4.260e-01
3.0	3.396e+09	2.335e+01	7.576e+01	3.168e-02	1.028e-01
4.0	8.371e+08	1.158e+01	3.094e+01	1.432e-02	3.828e-02
Totals	**2.893e+11**	**1.327e+02**	**6.649e+02**	**2.048e-01**	**1.074e+00**

Results - Dose Point # 2 - (15000,914,914) cm					
Energy (MeV)	**Activity (Photons/sec)**	**Fluence Rate MeV/cm²/sec No Buildup**	**Fluence Rate MeV/cm²/sec With Buildup**	**Exposure Rate mR/hr No Buildup**	**Exposure Rate mR/hr With Buildup**
0.015	5.847e+09	5.266e-265	3.424e-28	4.517e-266	2.937e-29
0.03	1.247e+10	1.489e-39	2.540e-27	1.475e-41	2.518e-29
0.08	7.524e+09	8.870e-09	2.501e-07	1.404e-11	3.957e-10
0.1	6.447e+09	9.718e-08	4.276e-06	1.487e-10	6.542e-09
0.15	6.836e+09	1.838e-06	1.125e-04	3.027e-09	1.853e-07
0.2	1.617e+10	2.044e-05	1.223e-03	3.608e-08	2.158e-06
0.3	1.051e+10	9.363e-05	4.113e-03	1.776e-07	7.801e-06
0.4	2.244e+10	7.337e-04	2.319e-02	1.430e-06	4.518e-05
0.5	3.752e+10	3.240e-03	7.695e-02	6.359e-06	1.511e-04

0.6	2.587e+10	4.807e-03	8.974e-02	9.383e-06	1.752e-04
0.8	5.049e+10	2.997e-02	3.839e-01	5.700e-05	7.301e-04
1.0	3.060e+10	4.292e-02	4.149e-01	7.912e-05	7.649e-04
1.5	2.473e+10	1.486e-01	9.003e-01	2.501e-04	1.515e-03
2.0	2.762e+10	4.189e-01	1.918e+00	6.477e-04	2.965e-03
3.0	3.396e+09	1.621e-01	5.280e-01	2.199e-04	7.163e-04
4.0	8.371e+08	8.099e-02	2.151e-01	1.002e-04	2.660e-04
Totals	**2.893e+11**	**8.924e-01**	**4.555e+00**	**1.371e-03**	**7.339e-03**

ATTACHMENT 9

MicroShield 8.02
Nathan Hogue (8.00-0000)

Date	By	Checked
9-29-15	N. Hogue	[illegible]

Filename	Run Date	Run Time	Duration
Contain1.msd	September 29, 2015	1:15:41 PM	00:00:01

Project Info	
Case Title	Containment Shine
Description	Fuel Experiment Accident Analyses
Geometry	13 - Rectangular Volume

Source Dimensions	
Length	1.8e+3 cm (60 ft 0.1 in)
Width	1.8e+3 cm (60 ft 0.1 in)
Height	1.8e+3 cm (60 ft 0.1 in)

Dose Points			
A	X	Y	Z
#1	1.9e+3 cm (62 ft 0.1 in)	914.0 cm (29 ft 11.8 in)	914.0 cm (29 ft 11.8 in)
#2	1.5e+4 cm (492 ft 1.5 in)	914.0 cm (29 ft 11.8 in)	914.0 cm (29 ft 11.8 in)

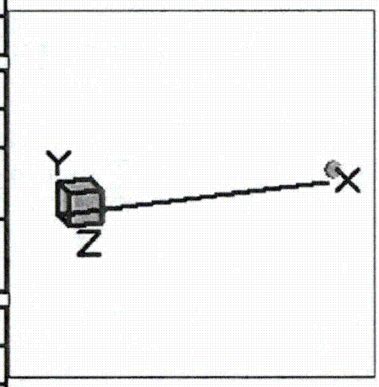

Shields			
Shield N	Dimension	Material	Density
Source	6.12e+09 cm³	Air	0.00122
Shield 1	30.5 cm	Concrete	2.35
Air Gap		Air	0.00122

Source Input: Grouping Method - Standard Indices
Number of Groups: 25
Lower Energy Cutoff: 0.015
Photons < 0.015: Included
Library: Grove

Nuclide	Ci	Bq	µCi/cm³	Bq/cm³
I-131	8.0763e+000	2.9882e+011	1.3200e-003	4.8840e+001
I-132	1.7866e+001	6.6104e+011	2.9200e-003	1.0804e+002
I-133	3.8240e+001	1.4149e+012	6.2500e-003	2.3125e+002
I-134	4.3563e+001	1.6118e+012	7.1200e-003	2.6344e+002
I-135	3.6160e+001	1.3379e+012	5.9100e-003	2.1867e+002
Kr-85	1.6459e-003	6.0897e+007	2.6900e-007	9.9530e-003
Kr-85m	7.2810e+000	2.6940e+011	1.1900e-003	4.4030e+001
Kr-87	1.4807e+001	5.4785e+011	2.4200e-003	8.9540e+001
Kr-88	2.0864e+001	7.7196e+011	3.4100e-003	1.2617e+002
Kr-89	2.6676e+001	9.8703e+011	4.3600e-003	1.6132e+002
Kr-90	2.6309e+001	9.7344e+011	4.3000e-003	1.5910e+002

Xe-133	1.8172e+001	6.7236e+011	2.9700e-003	1.0989e+002
Xe-135	1.3093e+001	4.8446e+011	2.1400e-003	7.9180e+001
Xe-135m	6.4856e+000	2.3997e+011	1.0600e-003	3.9220e+001
Xe-137	3.4386e+001	1.2723e+012	5.6200e-003	2.0794e+002
Xe-138	3.5915e+001	1.3289e+012	5.8700e-003	2.1719e+002

Buildup: The material reference is Shield 1	
Integration Parameters	
X Direction	10
Y Direction	20
Z Direction	20

Results - Dose Point # 1 - (1890,914,914) cm					
Energy (MeV)	**Activity (Photons/sec)**	**Fluence Rate MeV/cm²/sec No Buildup**	**Fluence Rate MeV/cm²/sec With Buildup**	**Exposure Rate mR/hr No Buildup**	**Exposure Rate mR/hr With Buildup**
0.015	2.904e+11	1.248e-252	3.842e-24	1.070e-253	3.296e-25
0.03	5.010e+11	5.485e-35	2.306e-23	5.436e-37	2.285e-25
0.08	2.546e+11	9.536e-05	2.387e-03	1.509e-07	3.777e-06
0.1	3.444e+11	1.599e-03	6.008e-02	2.447e-06	9.192e-05
0.15	3.872e+11	2.885e-02	1.453e+00	4.751e-05	2.393e-03
0.2	1.110e+12	3.537e-01	1.732e+01	6.242e-04	3.056e-02
0.3	5.920e+11	1.156e+00	4.243e+01	2.192e-03	8.048e-02
0.4	1.346e+12	8.808e+00	2.382e+02	1.716e-02	4.640e-01
0.5	2.718e+12	4.399e+01	9.123e+02	8.635e-02	1.791e+00
0.6	1.808e+12	6.003e+01	9.936e+02	1.172e-01	1.939e+00
0.8	4.038e+12	4.012e+02	4.686e+03	7.631e-01	8.912e+00
1.0	2.157e+12	4.855e+02	4.360e+03	8.949e-01	8.037e+00
1.5	1.735e+12	1.580e+03	9.156e+03	2.658e+00	1.540e+01
2.0	1.593e+12	3.562e+03	1.589e+04	5.508e+00	2.458e+01
3.0	1.838e+11	1.264e+03	4.101e+03	1.715e+00	5.563e+00
4.0	4.532e+10	6.268e+02	1.675e+03	7.754e-01	2.072e+00
Totals	**1.910e+13**	**8.033e+03**	**4.208e+04**	**1.254e+01**	**6.887e+01**

Results - Dose Point # 2 - (15000,914,914) cm					
Energy (MeV)	**Activity (Photons/sec)**	**Fluence Rate MeV/cm²/sec No Buildup**	**Fluence Rate MeV/cm²/sec With Buildup**	**Exposure Rate mR/hr No Buildup**	**Exposure Rate mR/hr With Buildup**
0.015	2.904e+11	2.616e-263	1.701e-26	2.244e-264	1.459e-27
0.03	5.010e+11	5.981e-38	1.021e-25	5.928e-40	1.012e-27
0.08	2.546e+11	3.001e-07	8.461e-06	4.749e-10	1.339e-08
0.1	3.444e+11	5.191e-06	2.284e-04	7.942e-09	3.494e-07
0.15	3.872e+11	1.041e-04	6.374e-03	1.714e-07	1.050e-05
0.2	1.110e+12	1.404e-03	8.395e-02	2.478e-06	1.482e-04
0.3	5.920e+11	5.274e-03	2.317e-01	1.000e-05	4.394e-04
0.4	1.346e+12	4.403e-02	1.392e+00	8.579e-05	2.711e-03
0.5	2.718e+12	2.347e-01	5.574e+00	4.606e-04	1.094e-02

0.6	1.808e+12	3.359e-01	6.271e+00	6.557e-04	1.224e-02
0.8	4.038e+12	2.397e+00	3.070e+01	4.559e-03	5.839e-02
1.0	2.157e+12	3.026e+00	2.926e+01	5.579e-03	5.393e-02
1.5	1.735e+12	1.043e+01	6.318e+01	1.755e-02	1.063e-01
2.0	1.593e+12	2.416e+01	1.106e+02	3.737e-02	1.711e-01
3.0	1.838e+11	8.774e+00	2.858e+01	1.190e-02	3.877e-02
4.0	4.532e+10	4.385e+00	1.164e+01	5.425e-03	1.440e-02
Totals	**1.910e+13**	**5.380e+01**	**2.875e+02**	**8.360e-02**	**4.694e-01**

ATTACHMENT 9

ATTACHMENT 10

WIND ROSE PLOT:
Station #03945 - COLUMBIA/REGIONAL ARPT, MO

DISPLAY:
Wind Speed
Direction (blowing from)

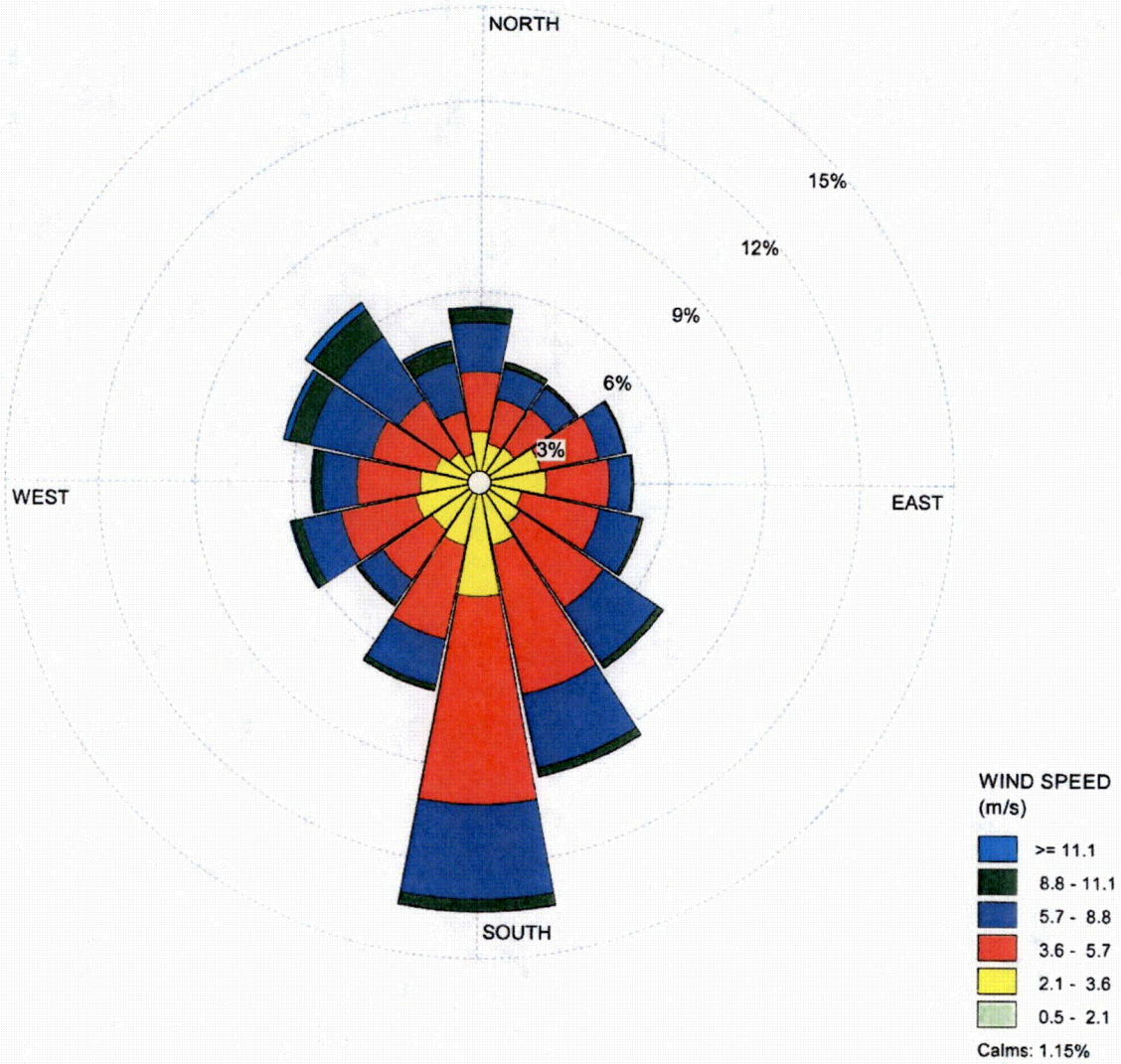

COMMENTS:	DATA PERIOD:	COMPANY NAME:	
	Start Date: 1/1/1961 - 00:00 **End Date: 12/31/1969 - 21:00**	MODELER:	
	CALM WINDS: **1.15%**	TOTAL COUNT: **73020 hrs.**	
	AVG. WIND SPEED: **4.70 m/s**	DATE: **9/23/2015**	PROJECT NO.:

WRPLOT View - Lakes Environmental Software

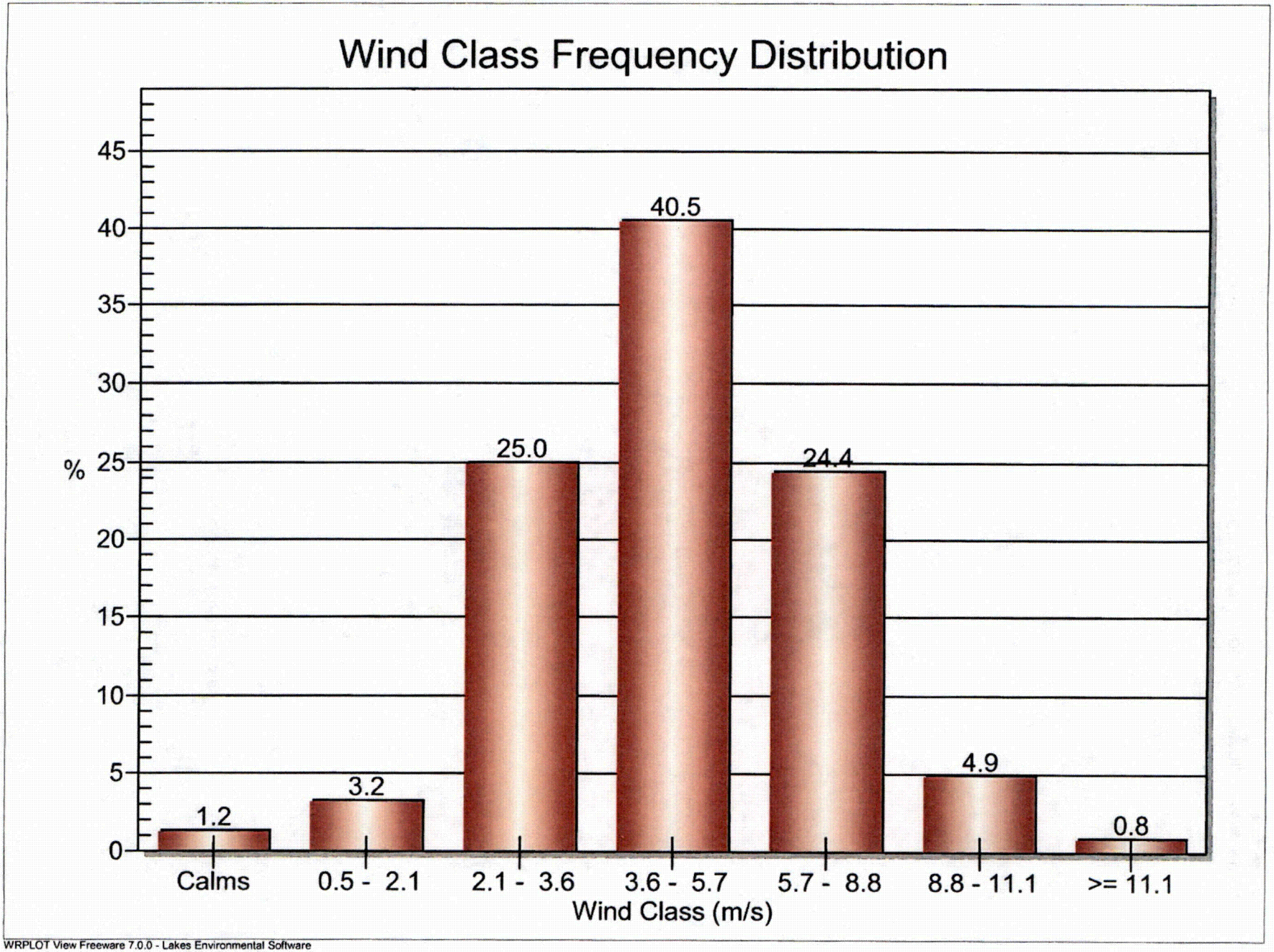

WRPLOT View Freeware 7.0.0 - Lakes Environmental Software

ATTACHMENT 11

WIND ROSE PLOT:
Station #03945 - COLUMBIA/REGIONAL ARPT, MO

DISPLAY:
Wind Speed
Direction (blowing from)

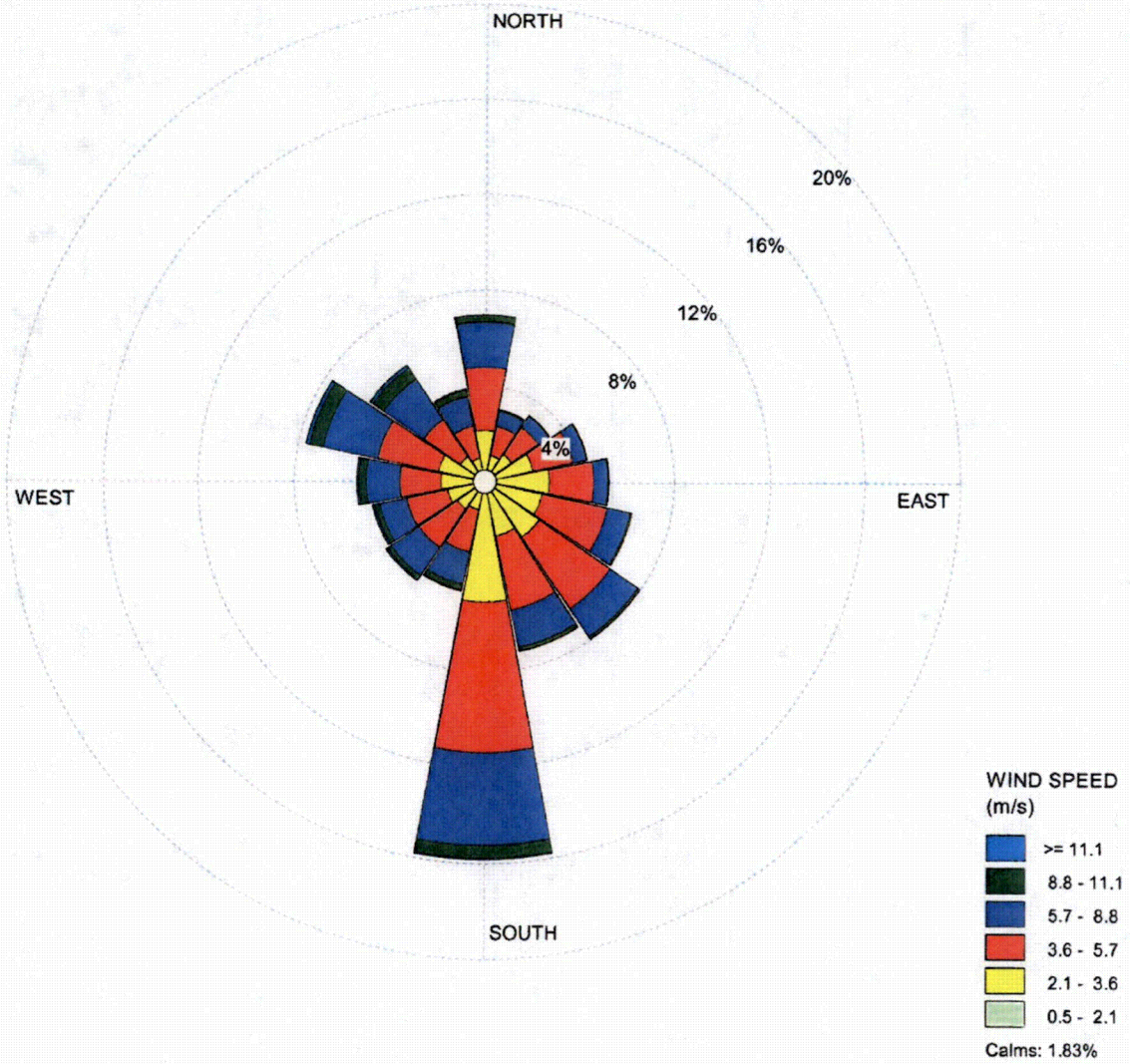

COMMENTS:	DATA PERIOD:	COMPANY NAME:	
	Start Date: 1/1/1970 - 00:00 **End Date: 12/31/1990 - 23:00**	MODELER:	
	CALM WINDS: **1.83%**	TOTAL COUNT: **154387 hrs.**	
	AVG. WIND SPEED: **4.44 m/s**	DATE: **9/23/2015**	PROJECT NO.:

WRPLOT View - Lakes Environmental Software

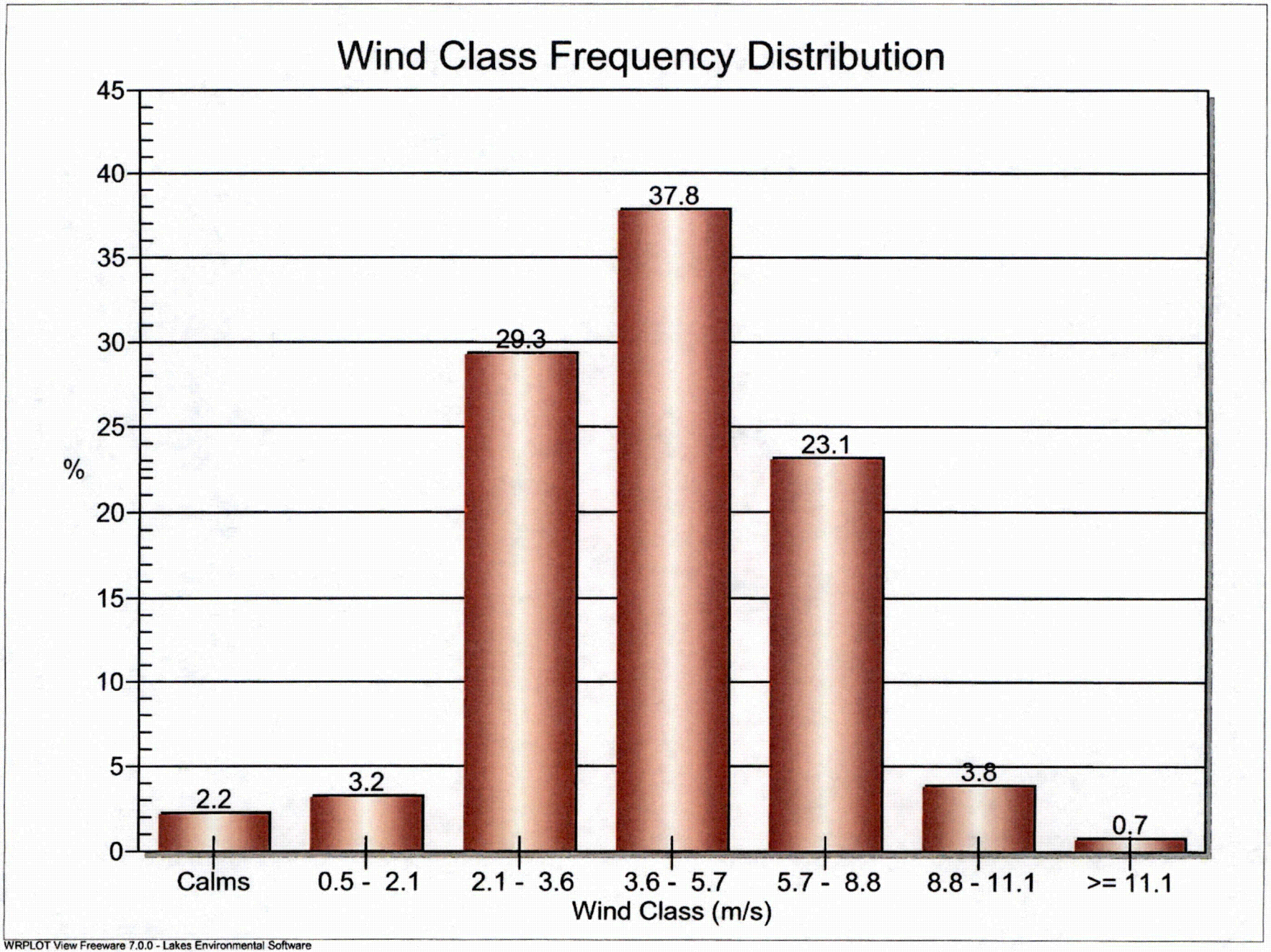

WRPLOT View Freeware 7.0.0 - Lakes Environmental Software

ATTACHMENT 12

WIND ROSE PLOT:
Station #03945 - COLUMBIA/REGIONAL ARPT, MO

DISPLAY:
Wind Speed
Direction (blowing from)

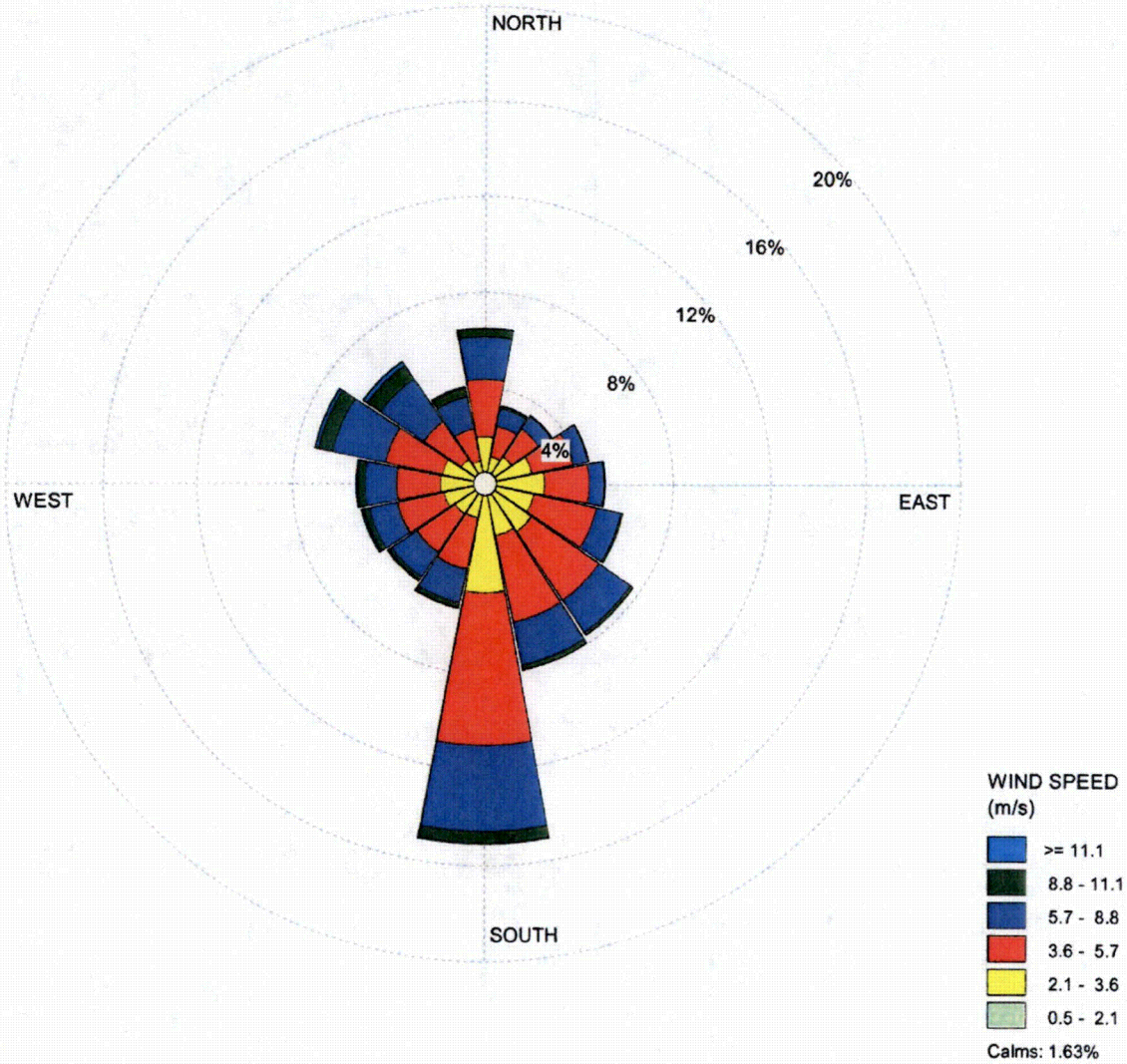

COMMENTS:	DATA PERIOD:	COMPANY NAME:	
	Start Date: 1/1/1961 - 00:00 **End Date: 12/31/1990 - 23:00**	MODELER:	
	CALM WINDS: **1.63%**	TOTAL COUNT: **227407 hrs.**	
	AVG. WIND SPEED: **4.52 m/s**	DATE: **9/23/2015**	PROJECT NO.:

WRPLOT View - Lakes Environmental Software

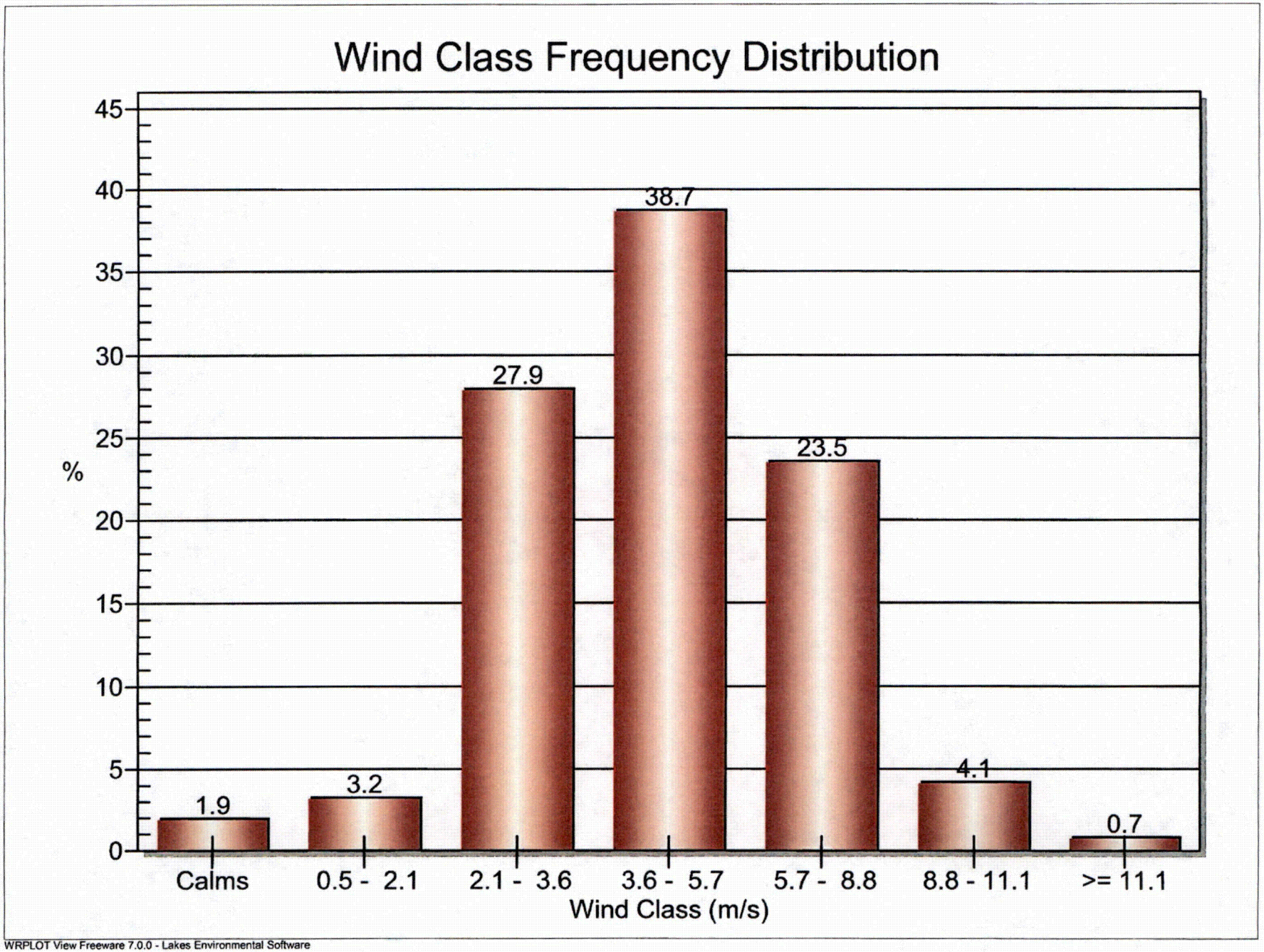

WRPLOT View Freeware 7.0.0 - Lakes Environmental Software

1961 - 1990

ATTACHMENT 13

Stack Effluent Releases – Calendar Years 2005 to 2014

Isotope	2005	2006	2007	2008	2009	2010	2011	2012	2103	2014	Average
	(% of Technical Specification Limit)										
Ar-41	76.6876	72.8113	78.3592	77.37	70.3004	58.0857	45.14	68.00	78.1054	74.2642	69.91238
C-14	0.777	0.74	0.793	0.7867	0.613	0.58	0.477	0.723	0.0083	0.0079	0.55059
Os-191	0.0011	0.0018	0.0066		4.1739	0.0294	0.0008	0.0003	0.0001	0.0002	0.46824
I-131	0.0921	0.0435	0.0401	0.0782	0.6035	0.0415	0.0506	0.0503	0.0169	0.2201	0.12368
Ce-144			0.1165	0.0852							0.10085
Co-60	0.0853	0.0792	0.3372	0.0784		0.0084		0.0049	0.0054		0.08554
H-3	0.0732	0.0521	0.0485	0.0527	0.0328	0.0353	0.0496	0.0426	0.0633	0.0558	0.05059
Kr-79								0.0482	0.0274		0.0378
Sc-46			0.0263	0.0022							0.01425
K-40			0.0093	0.0164					0.01		0.0119
Cd-109		0.0112									0.0112
I-125	0.0215	0.0041		0.0021	0.0073				0.0037		0.00774
Fe-59			0.0038								0.0038
Se-75	0.0005				0.0057						0.0031
Sb-125								0.0026			0.0026
Zn-65	0.0005	0.001	0.0026				0.0009				0.00125
Hg-203	0.0002	0.001	0.0002		0.0013					0.0033	0.0012
Cs-137	0.0007	0.0013	0.0006	0.0003		0.0004	0.0012				0.00075
Zr-95				0.0005			0.0005				0.0005
I-133	0.0003	0.0001	0.0001	0.0001	0.0003	0.0001	0.0001		0.0001	0.003	0.00047
Sn-113				0.0009					0.0003	0.0001	0.00043
Au-196	0.0005	0.0003	0.0004					0.0003		0.0004	0.00038
Gd-153				0.0003							0.0003

ATTACHMENT 13

Stack Effluent Releases – Calendar Years 2005 to 2014

Cu-67							0.0003				0.0003
Pa-233		0.0002					0.0003				0.00025
S-35		0.0001			0.0001	0.0005	0.0002				0.00023
Hf-181	0.0004	0.0001		0.0001				0.0002			0.0002
Ce-141	0.0003		0.0002	0.0001							0.0002
Xe-133										0.0002	0.0002
Ba-140		0.0003		0.0002	0.0001	0.0002					0.0002
Nb-95			0.0003		0.0001						0.0002
Br-82	0.0002				0.0001						0.00015
Co-58					0.0001	0.0001	0.0002				0.00013
As-77		0.0002			0.0001	0.0001					0.00013
Ce-139	0.0001				0.0001						0.0001
Ru-103	0.0001					0.0001				0.0001	0.0001
Mn-54			0.0001								0.0001
Be-7				0.0001							0.0001
Co-57					0.0001						0.0001
Hf-175						0.0001	0.0001				0.0001
Xe-135m									0.0001		0.0001