QUESTION # 001

Which of the following conditions would be indicative of a failed reactor recirculation jet pump?

	Core Plate DP	Affected RR Loop's Flow
a.	Decrease	Increase
b.	Increase	Increase
c.	Increase	Decrease
d.	Decrease	Decrease

ANSWER:
a.

REFERENCE:
SD-264, Reactor Recirculation System, Revision 13

Proposed References to be provided to applicants during examination: none.

BANK (DAEC)
FUNDAMENTAL

K/A # 295001.A2.05 Partial or Complete Loss of Forced Core Flow Circulation: Ability to determine and/or interpret the following as they apply to PARTIAL OR COMPLETE LOSS OF FORCED CORE FLOW CIRCULATION: Jet pump operability. (41.10)

EXPLANATION:
a. Correct.
b. Incorrect: a decrease in core plate differential pressure indication would occur as a result of a failed recirculation jet pump.
c. Incorrect: a decrease in core plate differential pressure indication would occur as a result of a failed recirculation jet pump. Also, the flow indication for the recirculation loop associated with the failed jet pump would increase.
d. Incorrect: the flow indication for the recirculation loop associated with the failed jet pump would increase.

QUESTION # 002

Given the following:

- The plant is operating at 100% power.
- The “M” Breaker is open and unavailable due to ITC Maintenance.
- A lightning strike in the switchyard causes the “D”, “I” and “K” Breakers to TRIP and Lockout.

What is the expected plant response 5 minutes after the lightning strike?

a. 1A1, 1A2, 1A3 and 1A4 are de-energized.

b. 1A1, 1A2, 1A3 and 1A4 are energized from 1X3, Startup Transformer.

c. 1A1 and 1A2 are de-energized and 1A3 and 1A4 are energized from the Standby Diesel Generators.

d. 1A1and 1A2 are on 1X2, Aux Transformer and 1A3 and 1A4 are on 1X4, the Standby Transformer.

ANSWER:
c.

REFERENCE:
AOP-301.1, Station Blackout, Revision 55
SD-358, Reactor Protection System, Revision 9
SD-304, Electrical Power Systems, Revision 19

Proposed References to be provided to applicants during examination: Switchyard and Bus Drawing.

NEW
HIGHER

K/A #: Generic K/A 2.1.25: Ability to interpret reference materials, such as graphs, curves, tables, etc. K/A #295003: Partial or Complete Loss of A.C. Power.

EXPLANATION:
a. Incorrect: the Standby Diesel Generators will repower 1A3 and 14A after ±10 seconds. It must be understood that a lockout of the “K” breaker will not lockout the essential buses and that there is not an electrical path from the “J” breaker.
b. Incorrect: the Standby Transformer will be energized due to the loss of power through the “D” and “K” breaker. “J” Breaker is not listed in the list of breakers that tripped and may be mistaken as a possible path for electricity.
c. Correct: this is the expected response due to the loss of power to the essential buses causing a loss of power to RPS and a Group 1-5 isolation closing the MSIVs. This will cause a loss of steam to the turbine preventing the Aux transformer from having power. The transfer to the Startup Transformer will not occur due to it being de-energized.
d. Incorrect: the Aux Transformer will not be energized due to the turbine tripping on reverse power following the scram caused by the loss of RPS. There is a flow path through the

Main Transformer to the Aux Transformer that locks out on the turbine trip that may be used in a backfeed during outage conditions, but is prevented with a backup lockout on the turbine trip.

Switchyard and Bus Drawing

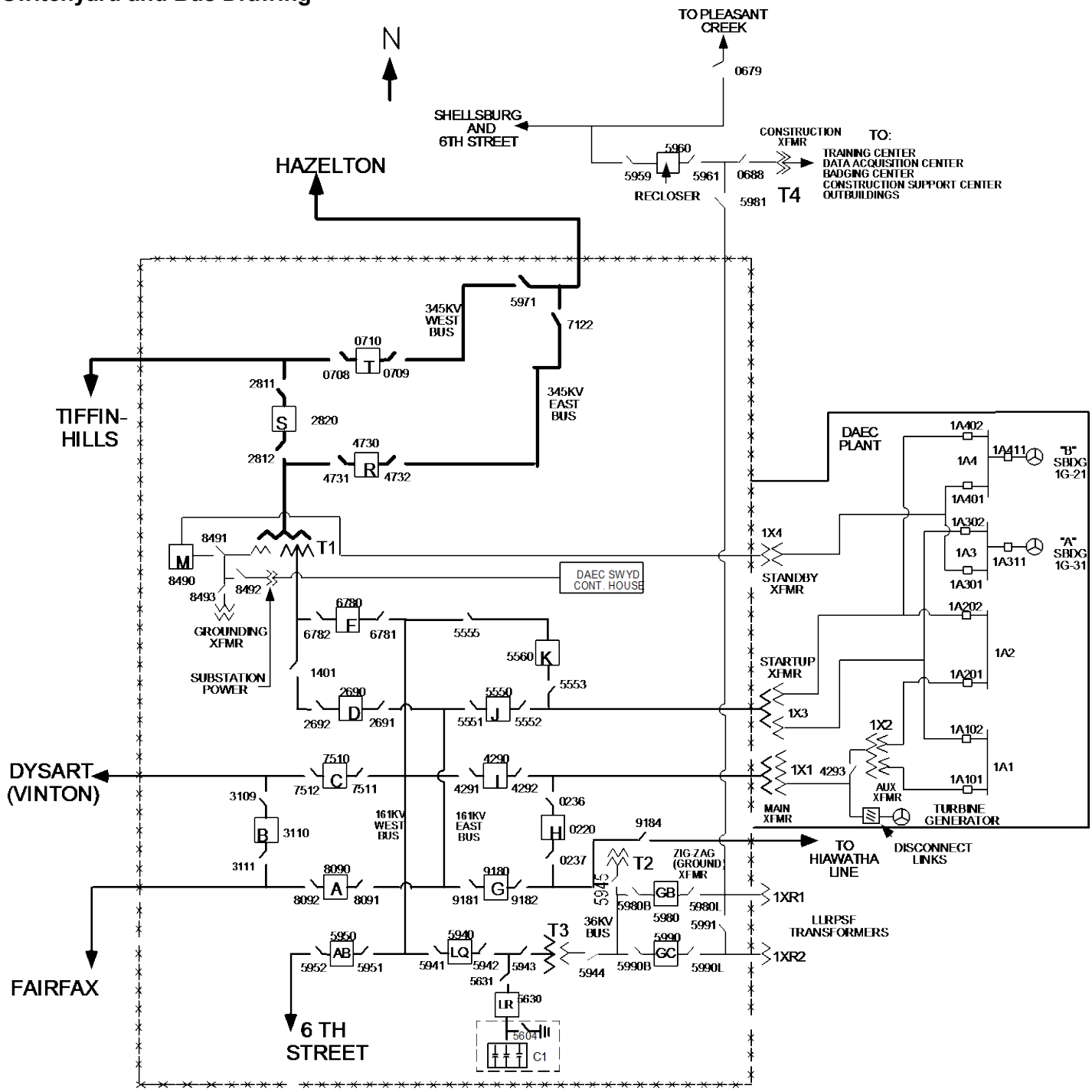

QUESTION # 003

Given the following:

- The Plant was operating at 100% power.
- ‘A’ Condensate Pump 1P-8A and ‘B’ Condensate Pump 1P-8B were both running. THEN:
- 1C08A (A-9) “125V DC SYSTEM 1 TROUBLE” was received, AND
- 125V DC System 1 voltage is reported to be zero (0) volts.

What indication will the operator see in the Control Room for ‘A’ Condensate Pump 1P-8A?

a. Red light illuminated, pump is running.

b. No indication, pump is stopped.

c. Tripped (1C06A (A-12), "A" CONDENSATE PUMP 1P-8A TRIP OR MOTOR OVERLOAD, illuminated), pump is stopped.

d. No indication, pump is running.

ANSWER:
d

REFERENCE:
SD-304, Electrical Power Systems, Revision 19
SD-375, Plant DC Power Supply System, Revision 8
SD-639, Condensate and Condensate Demineralizer Systems, Revision 9
ARP 1C08A Revision 86
AOP 302.1 Loss of 125VDC Power Revision 54

Proposed References to be provided to applicants during examination: None.

NEW
HIGHER

K/A # 295004.K1.03: Knowledge of the operational implications of the following concepts as they apply to PARTIAL OR COMPLETE LOSS OF D.C. POWER: Electrical bus divisional separation. CFR: 41.8 to 41.10

EXPLANATION:
a. Incorrect: the pump has lost control power and will have no indication.
b. Incorrect: the pump remains running and due to the loss of control power will have no indication.

c. Incorrect: ARP 1C06A (A-12) illuminates if an automatic pump trip occurs. Although the pump will display no running indication it has not tripped however, and remains running.

d. Correct.

QUESTION # 004

Given the following:

- The plant was operating at 25% power during a startup.
- Following the transfer of nonessential buses 1A1 and 1A2 from the Startup to the Auxiliary Transformer, 1C08B (C-5), AUXILIARY XFMR 1X2 TROUBLE, was received.
- Immediately thereafter, an electrical fault in the Auxiliary Transformer resulted in the trip of the 286/B main generator lockout relay.

FIVE (5) minutes after this fault the Main Turbine has _____. Non-essential buses 1A1 and 1A2 have experienced a(n) _____.

a. tripped
   closed circuit auto transfer

b. tripped
   open circuit auto transfer

c. NOT tripped
   closed circuit auto transfer

d. NOT tripped
   open circuit auto transfer.

ANSWER:
b.

REFERENCE:
SD-304, Electrical Power Systems, Revision 19

Proposed References to be provided to applicants during examination: None.

NEW
HIGHER

K/A # 295005.K2.08: Knowledge of the interrelations between MAIN TURBINE GENERATOR TRIP and the following: A.C. electrical distribution. CFR: 41.7

EXPLANATION:
a. Incorrect; for a closed circuit (make-before-break) transfer for non-essential buses 1A1 and 1A2 to occur, Main Generator Lockout Relays 286/P and 286/B must both be reset. If either lockout relay is energized (as in the case of the fault in this question), an open circuit (break-before-make) bus transfer will occur.
b. Correct.
c. Incorrect; the 286BU relay duplicates the functions of the 286P relay and will initiate a turbine trip. Also, for a closed circuit (make-before-break) transfer for non-essential buses 1A1 and 1A2 to occur, Main Generator Lockout Relays 286/P and 286/B must both be reset. If either lockout relay is energized (as in the case of the fault in this question), an open circuit (break-before-make) bus transfer will occur.

d. Incorrect; the 286BU relay duplicates the function of 286P relay and will initiate a Main Turbine trip.

QUESTION # 005

The unit was operating at full rated power when an APRM High Flux SCRAM occurred due to a failure in the pressure regulating system that caused RPV pressure to rise slowly.

Assume all systems operate as designed and that the following operator actions are taken:

- Reactor Mode Switch is in SHUTDOWN; ALL control rods are fully inserted
- RPV Water Level is being automatically controlled with a Startup FRV and one feed pump in operation
- RPV Pressure is being controlled with the Bypass Valves on the Bypass Valve Jack (RPV Pressure cycled with automatic operation of the LLS Relief Valves until Bypass Valve operation was established.)

When the plant stabilizes following the transient, the Reactor Recirculation pumps will …

a. be operating at approximately 45% speed to ensure that reactor power output does not exceed the capacity of the operating feed pump.

b. have tripped due to actuation of the ATWS – RPT logic on high RPV pressure.

c. be operating at minimum speed to prevent cavitation of the pumps resulting from a reduction in NPSH.

d. have tripped to ensure that MCPR limits are not exceeded due to the pressure transient caused by the closure of the main turbine control valves.

ANSWER:
c.

REFERENCE:
SD-264, Reactor Recirculation System; Rev 13

Proposed References to be provided to applicants during examination: NONE

NEW

HIGHER

K/A 295006 AK 3.06: Knowledge of the reasons for the following responses as they apply to SCRAM : Recirculation pump speed reduction. CFR: 41.5

EXPLANATION:
a. Incorrect – Plausible since RR pumps do runback to 45% on the trip of one feed pump but the 20% limiter will be in operation due to low feed flow.
b. Incorrect – ATWS RPT does not actuate until RPV pressure rises above 1140 psig. LLS Reliefs cycle between 910 and 1035 psig after be armed at 1055 psig.
c. Correct – RR pumps runback to 20% when feed flow is less than 20% to prevent cavitation of the pumps due to the reduction in NPSH
d. Incorrect – EOC-RPT is actuated by fast closure (low ETS oil pressure) of the TCVs or closure of the TSVs. Valves operated normally, albeit in response to the control system failure.

QUESTION # 006

A series of electrical switching operations must take place when energizing the Inboard Shutdown Cooling Isolation valve, MO-1908, for establishing Shutdown Cooling from 1C-388.

Which of the following outlines the breaker manipulations needed to accomplish this?

a. Open 1B3400
   Open 1B3401
   Open 1B4401
   Reclose 1B3400 to energize the bus for MO-1908
   Reopen 1B3400 after MO-1908 has been operated

b. Open 1B4401
   Open 1B3400
   Open 1B3401
   Reclose 1B4401 to energize the bus for MO-1908
   Reopen 1B4401 after MO-1908 has been operated

c. Open 1B4401
   Open 1B3400
   Reclose 1B4401
   Close 1B3401 to energize the bus for MO-1908
   Leave this alignment after MO-1908 has been operated

d. Open 1B4401
   Open 1B3400
   Open 1B3401
   Reclose 1B4401 to energize the bus for MO-1908
   Leave this alignment after MO-1908 has been operated

ANSWER: c.

REFERENCES: AOP 915, SHUTDOWN OUTSIDE CONTROL ROOM; SD-304, ELECTRICAL POWER SYSTEMS.

Reference to be provided during exam: Attached schematic drawing.

KA#: 295016 AA1.04, Ability to operate and or monitor the following responses as they apply to Control Room Abandonment: A.C. Electrical Distribution.

BANK

HIGHER

See Explanation in Original Bank Question.

ORIGINAL BANK QUESTION

Examination Outline Cross-reference:	Level	RO	SRO
	Tier #	1	
	Group #	1	
	K/A #	295016 AA1.04	
	Importance Rating		

Ability to operate and or monitor the following responses as they apply to Control Room Abandonment: A.C. Electrical Distubution.

Proposed Question: RO Question # 6

See the attached schematic on the next page.

A series of electrical switching operations must take place when energizing the Inboard Shutdown Cooling Isolation valve, MO-1908, for establishing Shutdown Cooling from 1C-388.

Which of the following CORRECTLY outline the breaker manipulations to accomplish this?

A. Open 1B3400
Open 1B3401
Open 1B4401
Reclose 1B3400 to energize the bus for MO-1908
Reopen 1B3400 after MO-1908 has been operated

B. Open 1B4401
Open 1B3400
Open 1B3401
Reclose 1B4401 to energize the bus for MO-1908
Reopen 1B4401 after MO-1908 has been operated

C. Open 1B4401
Open 1B3400
Reclose 1B4401
Close 1B3401 to energize the bus for MO-1908
Leave this alignment after MO-1908 has been operated

D. Open 1B4401
Open 1B3400
Open 1B3401
Reclose 1B4401 to energize the bus for MO-1908
Leave this alignment after MO-1908 has been operated

Proposed Answer:

Explanation (Optional):

A. Incorrect – Possible misconception is that 1B34 is reenergized through 1B3400. This is wrong because 1C388 is entirely Div 2 and this outline relies on a Div 1 power source.

B. Incorrect – Possible misconception that MO-1908 is from 1B34A. Reopening 1B4401 would deenergize 1B34A and 1B44A, the swing bus for LPCI valves.

C. Correct IAW AOP 915

D. Incorrect – Possible misconception that MO-1908 is powered from 1B34A

Technical Reference(s): AOP 915

SD-304 Fig. 2

Proposed References to be provided to applicants during examination:

Learning Objective: (As available)

Question Source: Bank # X

Modified Bank # (Note changes or attach parent)

New

Question History: Last NRC Exam:

Question Cognitive Level: Memory or Fundamental Knowledge

Comprehension or Analysis X

10 CFR Part 55 Content: 55.41

55.43

Comments:

QUESTION # 007

Given the following:

- The plant is in Mode 1 at 95% power.
- Reactor Building Closed Cooling Water Heat Exchanger 1E-35A was isolated due to a valve lineup error.

Which of the following describes an effect this condition will have on the Recirculation System if left uncorrected?

a. Recirculation Pump stator winding insulation degradation.

b. Recirculation Pump motor bearing damage.

c. Recirculation Pump M-G set generator winding degradation.

d. Recirculation Pump M-G set motor bearing damage.

ANSWER:
b.

REFERENCE:
SD-264, Reactor Recirculation System, Revision 13
SD-414, Reactor Building Closed Cooling Water System, Revision 9

Proposed References to be provided to applicants during examination: None.

NEW
HIGHER

K/A # 295018.A2.02: Ability to determine and/or interpret the following as they apply to PARTIAL OR COMPLETE LOSS OF COMPONENT COOLING WATER: Cooling water temperature. CFR: 41.10

EXPLANATION:
a. Incorrect; Recirculation Pump stator windings are air cooled. Rising RBCCW system temperature will not cause an adverse effect.
b. Correct; Recirculation Pump lubricating oil is cooled by RBBCW. As RBBCW system temperature rises, so will the oil temperature for the recirculation pumps. High oil temperature can result in motor bearing damage due to a reduction in lubrication.
c. Incorrect; Recirculation Pump M-G set generators are air cooled. Rising RBCCW system temperature will not cause an adverse effect.
d. Incorrect; Recirculation Pump M-G set oil coolers are cooled by GSW, not RBBCW. Rising RBCCW system temperature will not cause an adverse effect.

QUESTION # 008

Given the following:

- The plant is operating at 85% power.
- Five minutes ago an air leak occurred in the Instrument Air common supply piping located downstream of the Instrument Air Dryers.
- AOP-518, Failure of Instrument and Service Air, has been entered.
- CV-3034, Balance of Plant Instrument Air Header Isolation Valve, has been verified closed.
- Instrument Air Pressure is currently 78 psig.

Which of the following describes how Main Feedwater Regulating Valves would operate based on the existing plant conditions?

a. operate normally in response to control signals
b. not be able to move due to locking up
c. will be drifting to an open position
d. will be drifting to a closed position

ANSWER:
a

REFERENCE:
SD-518, Instrument and Service Air and Breathing Air Systems, Revision 9
SD-644, Feedwater System, Revision 14
AOP-518, Failure of Instrument and Service Air, Revision 34

NEW
HIGHER

K/A # 295019 (Partial or Total Loss of Inst. Air): Generic K/A # 2.2.44: Ability to interpret control room indications to verify the status and operation of a system, and understand how operator actions and directives affect plant and system conditions. CFR: 41.5

EXPLANATION:
a. Correct: Balance of Plant Instrument Air Header Isolation Valve CV-3034 would have closed at 80 psig, isolating the normal Instrument Air supply to the FRVs. CV-1579, “A” Feed Regulating Valve, and CV-1621, “B” Feed Regulating Valve, have backup air accumulators that will provide approximately 30 minutes of continuous operation as discussed in AOP-518. Operator action to throttle ‘A’ and ‘B’ Feedline Block valves MO 1592 and MO 1636 is not required yet.
b. Incorrect: The lockout relay actuates at an air supply pressure of <75 psig as sensed by the supply pressure switch. Pressure is still above this setpoint.
c. Incorrect: AOP-518 states that during a prolonged loss of air casualty the Feed Reg valves may drift open. Additionally, backup accumulators provide for 30 minutes of continuous operation. This question assumes only five minutes have elapsed.
d. Incorrect: AOP-518 states that during a prolonged loss of air casualty the FRVs may drift open. The failure direction of the valves would be open, not closed.

QUESTION # 009

Given the following:

- The reactor has been shutdown for 10 days.
- RPV level is 200" and steady.
- Shutdown cooling has just been lost.
- Reactor coolant temperature is currently 100°F and rising.
- Recirculation Pumps are not available.

Which of the following describes both the approximate time it will take to reach boiling in the reactor, as well as the alternate decay heat removal method that will remove the MOST decay heat?

a. 4.7 hours; Feed and Bleed to Radwaste or Condenser

b. 4.7 hours; Reactor Water Cleanup Heat Exchanger

c. 24.9 hours; Feed and Bleed to Radwaste or Condenser

d. 24.9 hours; Reactor Water Cleanup Heat Exchanger

ANSWER:
a.

REFERENCE:
AOP-149, Loss of Decay Heat Removal, Revision 41

Proposed References to be provided to applicants during examination: AOP-149, Appendix 1 (HEATUP RATE CURVE - RPV FLOODED) and Appendix 2 (HEATUP RATE CURVE - RPV LEVEL AT 200"), without CAUTIONS or NOTES (graphs ONLY).

NEW
HIGHER

K/A # 295021.K1.01 Knowledge of the operational implications of the following concepts as they apply to LOSS OF SHUTDOWN COOLING: Decay heat. CFR: 41.8 to 41.10

EXPLANATION:
a. Correct: if the correct graph is used (APPENDIX 2 - HEATUP RATE CURVE RPV LEVEL AT 200"), an approximate heatup rate of 24°F/hr will be obtained. (212°F - 100°F) / (24°F/hr) = 4.7°F/hr. Feed and Bleed to Radwaste or Condenser meets the Tech Spec requirements for alternate decay heat removal (AOP 149 page 7).
b. Incorrect: if the correct graph is used (APPENDIX 2 - HEATUP RATE CURVE RPV LEVEL AT 200"), an approximate heatup rate of 24°F/hr will be obtained. (212°F - 100°F) / (24°F/hr) = 4.7°F/hr. The reactor water cleanup heat exchanger system has a low net heat removal rate and should only be used if RWCU is not needed as a drain path for a feed and bleed operation or in circumstances where the bulk coolant temperatures are low enough that feed and bleed operations do not remove significant heat (AOP-149 page 9).

c. Incorrect: this answer would be reached if the incorrect graph was used (APPENDIX 1 - HEATUP RATE CURVE - RPV FLOODED). This would yield and approximate heatup rate of 4.5°F/hr. (212°F - 100°F) / (4.5°F/hr) = 24.9°F/hr. Feed and Bleed to Radwaste or Condenser meets the Tech Spec requirements for alternate decay heat removal (AOP 149 page 7).
d. Incorrect: this answer would be reached if the incorrect graph was used (APPENDIX 1 - HEATUP RATE CURVE - RPV FLOODED). This would yield and approximate heatup rate of 4.5°F/hr. (212°F - 100°F) / (4.5°F/hr) = 24.9°F/hr. The reactor water cleanup heat exchanger system has a low net heat removal rate and should only be used if RWCU is not needed as a drain path for a feed and bleed operation or in circumstances where the bulk coolant temperatures are low enough that feed and bleed operations do not remove significant heat (AOP-149 page 9).

APPENDIX 1
HEATUP RATE CURVE - RPV FLOODED

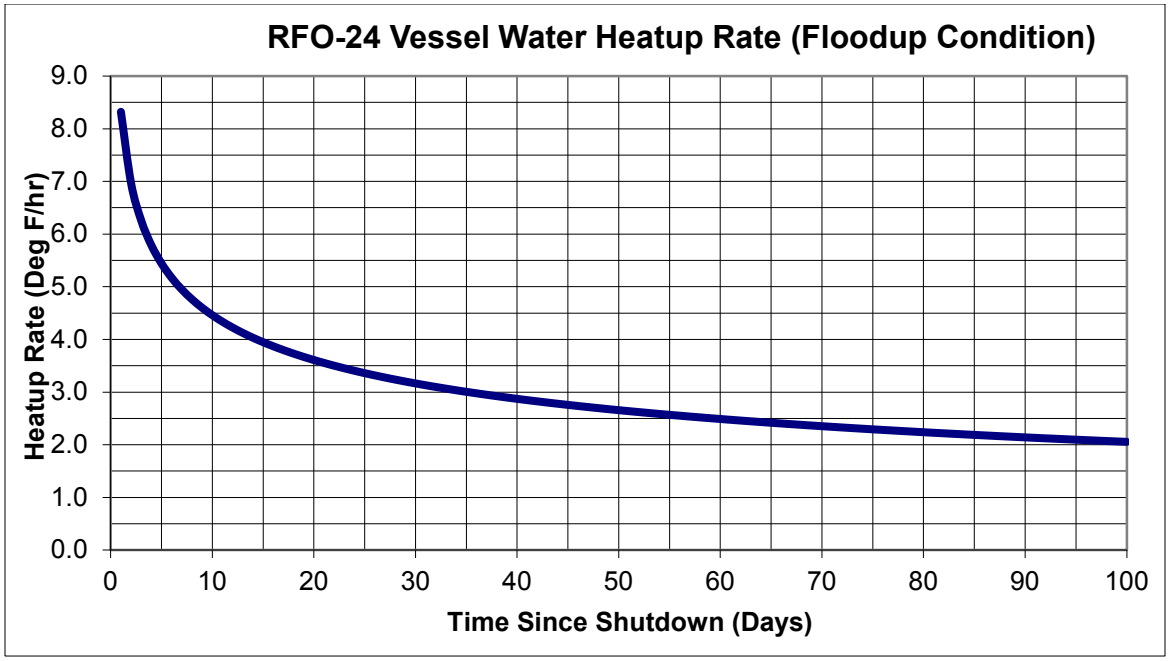

APPENDIX 2

HEATUP RATE CURVE - RPV LEVEL AT 200"

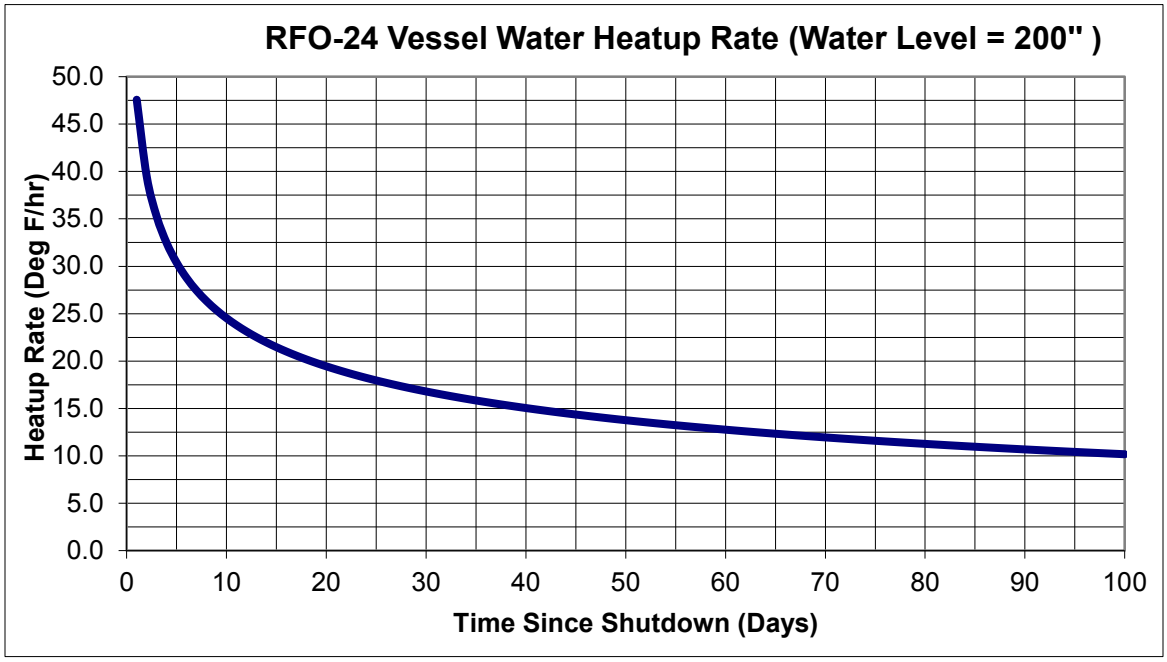

QUESTION # 010

Given the following:

- The plant is in MODE 5
- Core Alterations are in progress.

Assuming that there is no operator response to the below indications, which one of the following would be indicative of a problem that could result in an immediate threat to personnel safety for those present on the refuel floor?

a. A fuel assembly is being removed from the CORE and the HOIST JAM indicator illuminates.

b. After removing a fuel assembly from the core, the GRAPPLE NORMAL UP indicator fails to illuminate when expected.

c. A fuel assembly is being lowered into the core, the HOIST LOADED indicator is illuminated, the GRAPPLE ENGAGED indicator extinguishes, and the HOIST JAM indicator illuminates.

d. While lowering a fuel assembly into the core, the HOIST LOADED indicator extinguishes and the SLACK CABLE indicator illuminates when the bottom of the fuel assembly breaks the plane of the top guide.

ANSWER:
b.

REFERENCE:
SD-281, Fuel Handling System; Rev 7

Proposed References to be provided to applicants during examination: NONE

NEW

HIGHER

K/A # 295023; Knowledge of the interrelations between REFUELING ACCIDENTS and the following: Fuel handling equipment. CFR: 41.7

EXPLANATION:
a. Incorrect – power to the main hoist will be cut-out to prevent damage to the bail handle/upper tie-plate
b. Correct – failure of the GRAPPLE NORMAL up interlock would permit continue raising of the fuel assembly and extremely high radiation levels.
c. Incorrect – the design of the grapple will prevent opening of the grapple while the weight of the fuel assembly is on the grapple.
d. Incorrect – power to the main hoist will be cut-out to prevent damage to the fuel assembly.

QUESTION # 011

Which of the following describes the reason that initiation of Drywell Spray is permitted only within the limits of the Drywell Spray Initiation Curve (DWSIL)?

a. To ensure that Suppression Chamber Pressure can be restored below the Torus Spray Initiation Pressure.

b. To ensure that cycling of the reactor building to torus vacuum breakers is minimized and to prevent challenges of the primary containment pressure suppression capability.

c. To prevent an evaporative cooling pressure drop large enough to challenge containment integrity or draw in air through the torus to drywell vacuum breakers

d. To prevent an evaporative cooling pressure drop large enough to challenge containment integrity or draw in air through the reactor building to torus vacuum breakers

ANSWER: d.

REFERENCE: Bases EOP CURVES AND LIMITS, Rev. 13, p. 25

Proposed References to be provided to applicants during examination: NONE

BANK

FUNDAMENTAL

K/A # 295024 K3.08: Knowledge of the reasons for the following responses as they apply to HIGH DRYWELL PRESSURE: Containment Spray CFR: 41.5

EXPLANATION:
a. Incorrect: Restoring drywell pressure below the Torus Spray Initiation Pressure may occur, but is not the basis for DWSIL.
b. Incorrect. Cycling of the breakers is <u>not</u> a concern in the shaded area of the curve.
c. Incorrect. The concern is with de-inerting the primary containment atmosphere through the reactor building to torus vacuum breakers. The torus to drywell vacuum breakers are within the containment atmosphere.
d. Correct. Unrestricted spray operation could result in a negative pressure large enough to de-inert the primary containment or challenge the primary containment negative pressure capability.

ORIGINAL BANK QUESTION

Examination Outline Cross-reference:	Level	RO	SRO
	Tier #	1	
	Group #	1	
	K/A #	295024	
	Importance Rating	3.7	

Knowledge of the reasons for the following responses as they apply to HIGH DRYWELL PRESSURE: Containment Spray

Proposed Question: RO Question # 11

Which of the following describe the reason that initiation of Drywell Spray is permitted only within the limits of the Drywell Spray Initiation Curve?

A. To ensure that Suppression Chamber Pressure can be restored below the Torus Spray Initiation Pressure.

B. To prevent excessive cycling of the reactor building to torus vacuum breakers and challenge of the primary containment pressure suppression capability.

C. It could result in an evaporative cooling pressure drop large enough to challenge containment integrity or draw in air through the torus to drywell vacuum breakers.

D. It could result in an evaporative cooling pressure drop large enough to challenge containment integrity or draw in air through the reactor building to torus vacuum breakers.

Proposed Answer: D

Explanation (Optional):

A. Incorrect Restoring drywell pressure below the Torus Spray Initiation Pressure may occur, but this is not the basis for DWSIL.

B. Incorrect Cycling of the breakers is not a concern in the shaded area of the curve

C. The concern is with de-inerting the primary containment atmosphere through the reactor building to torus vacuum breakers. The torus to drywell vacuum breakers are within the containment atmosphere.

D. Correct Unrestricted spray operation could result in a negative pressure large enough to deinert the primary containment or challenge the primary containment negative pressure capability.

Technical Reference(s): Bases EOP CURVES AND LIMITS rev 13 pg 25

Proposed References to be provided to applicants during examination:

Learning Objective: (As available)

Question Source: Bank # X

Modified Bank # (Note changes or attach parent)

New

Question History: DAEC Bank Last NRC Exam: 2009

Question Cognitive Level: Memory or Fundamental Knowledge X

Comprehension or Analysis

10 CFR Part 55 Content: 55.41

55.43

Comments:

QUESTION # 12

You are the reactor operator. The unit was operating above 65% power with one steamline isolated and you had been increasing power by increasing core flow.

IOPI 3 POWER OPERATIONS, Section 6 STEADY STATE POWER OPERATIONS ABOVE 65% POWER WITH ONE STEAMLINE ISOLATED, step (2) (b) states

> "Maintain reactor dome pressure no greater than 1020 psig during power increase from 1240 MWth to 1434 MWth using narrow range reactor pressure instrument PR-4542 at 1C05. Adjust pressure set as necessary to maintain reactor pressure less than 1020 psig."

You were following this instruction and have adjusted reactor pressure 5 psig when a reactor scram occurred.

You are now in IPOI 5 REACTOR SCRAM, monitoring RPV pressure. The EHC pressure regulator is controlling reactor pressure with operation of Turbine Bypass valves. NO changes have been made to the pressure set since the scram.

As the bypass valves close to control reactor pressure following the trip which of the following is correct?

a. Reactor pressure will trend toward the nominal 940 psig setpoint.
b. Reactor pressure will trend toward the nominal 940 psig setpoint minus 5 psig.
c. Reactor pressure will trend toward the nominal 940 psig setpoint minus less than 5 psig.
d. Reactor pressure will trend toward the nominal 940 psig setpoint minus more than 5 psig.

ANSWER:
d.

REFERENCE:
IPOI 3 Power Operation, Revision 143
IPOI 5 Reactor Scram, Revision 58
SD-693.2a, EHC Logic System, Revision 6

Proposed References to be provided to applicants during examination: NONE.

NEW
HIGHER

KA295025 High Reactor Pressure
Ability to operate and/or monitor the following as they apply to HIGH REACTOR PRESSURE: Reactor/turbine pressure regulating system. CFR: 41.7

EXPLANATION:

a. Incorrect: The EHC pressure set would have been decreased to maintain reactor pressure at 1020 psig as power increased. This would result in a lower pressure set point that the EHC system would attempt to achieve at zero steam flow.

b. Incorrect: The EHC pressure set would have been decreased to maintain reactor pressure at 1020 psig as power increased. A greater than a 5 psig change in the pressure setpoint would be needed to achieve the 5 psig decrease in reactor pressure called for in the stem. (at higher steam flow the delta P through the steam lines is higher)

c. Incorrect: The EHC pressure set would have been decreased to maintain reactor pressure at 1020 psig as power increased. A greater than a 5 psig change in the pressure setpoint would be needed to achieve the 5 psig decrease in reactor pressure called for in the stem. (at higher steam flow the delta P through the steam lines is higher)

d. Correct: The EHC pressure set would have been decreased to maintain reactor pressure at 1020 psig as power increased. A greater than a 5 psig change in the pressure setpoint would be needed to achieve the 5 psig decrease in reactor pressure called for in the stem. (at higher steam flow the delta P through the steam lines is higher)

Examination Outline Cross-reference:	Level	RO	SRO
	Tier #	1	
	Group #	1	
	K/A #	295026 EA 2.03	
	Importance Rating	3.9	

Ability to determine and/or interpret the following as they apply to SUPPRESSION POOL HIGH WATER TEMPERATURE: Reactor Pressure

Proposed Question: **RO Question # 13**

Given the following plant conditions:

- The reactor remains at power following unsuccessful attempts to shutdown the reactor using RPS and ARI
- Boron injection using SBLC has been successfully initiated.
- RPV water level is being controlled between -25" and +15" with Feedwater
- The MSIVs closed on RPV Lo-Lo-Lo Level, while intentionally lowering level, before Defeat 15 could be implemented
- RPV pressure is approximately 720 psig and being manually controlled between 700 psig and 900 psig using SRV's
- Reactor Power remains at approximately 10%
- Torus water temperature is 140 °F and rising 1 °F per minute with both loops of RHR operating in the Torus Cooling mode
- Torus water level is 10.3 ft. and steady

Which ONE of the following RPV Pressure control strategies is the most desirable for these conditions?

A. Immediately establish an RPV pressure band of 400 to 600 psig

B. WAIT until the Cold Shutdown Boron Weight has been injected, THEN establish an RPV pressure band of 400 to 600 psig.

C. Re-open the MSIVs and use the main turbine bypass valves to rapidly depressurize the irrespective of cooldown limits.

D. Re-open the MSIVs and use the main turbine bypass valves and/or main steam line drains to shut the SRVs and control pressure within the band specified above

Proposed Answer: D

Explanation (Optional):

A. Incorrect – Plausible since lowering the pressure control band will initially increase the margin HCL. While lowering the pressure control band will delay exceeding HCL, it will not stop heat addition to the Torus. With the current control band and the current heatup rate of the Torus, HCL would not be exceed for 20-30 minutes. This must be balanced the potential for power increase from cooling down.

B. Incorrect – Plausible since lowering the pressure control band will initially increase the margin HCL and normally cooldown is not permitted until boron addition is complete. It is unnecessary to wait for boron addition to be completed before lowering pressure to prevent exceeding HCL (refer to override in Pressure Control Leg prior to step P-4. Additionally, While lowering the pressure control band will delay exceeding HCL, it will not stop heat addition to the Torus. With the current control band and the current heatup rate of the Torus, HCL would not be exceed for 20-30 minutes. This must be balanced the potential for power increase from cooling down.

C. Incorrect – It is not permissible to anticipate blowdown while implementing the ATWS – RPV Control EOP. Plausible since anticipating blowdown is preferable to ED in non-ATWS scenarios.

D. Correct -- Re-opening the MSIVs and transferring heat to the condenser instead of the Torus is much more desirable. Refer to override in Pressure Control Leg prior to step P-4.

Technical Reference(s): Bases ATWS Rev 17

Proposed References to be provided to applicants during examination: Heat Capacity Limit Curve

Learning Objective: (As available)

Question Source: Bank 39477

Modified Bank X (Note changes or attach parent)

New

Question History: Last NRC Exam:

Question Cognitive Level: Memory or Fundamental Knowledge

Comprehension or Analysis

10 CFR Part 55 Content: 55.41

55.43

Comments:

ORIGINAL QUESTION

Examination Outline Cross-reference:	Level	RO	SRO
	Tier #	1	
	Group #	1	
	K/A #	295026 EA 2.03	
	Importance Rating	3.9	

Ability to determine and/or interpret the following as they apply to SUPPRESSION POOL HIGH WATER TEMPERATURE: Reactor Pressure

Proposed Question: RO Question # 13

Given the following plant conditions:

- A reactor scram was unsuccessful, with reactor power at 10%
- RPV water level is being controlled between -25" and +15" with Feedwater
- RPV pressure is being controlled between 700 psig and 900 psig with SRV's
- Torus water temperature is 140 °F and rising 2 °F per minute
- Torus water level is 10.3 ft. and steady

Which ONE of the following is correct for these conditions?

A. Establish an RPV pressure band of 400 to 600 psig BEFORE 10 minutes have elapsed.

B. Establish an RPV pressure bend of 400 to 600 psig BEFORE 15 minutes have elapsed.

C. Perform an Emergency Depressurization BEFORE 10 minutes have elapsed.

D. Anticipate Emergency Depressurization BEFORE 10 minutes have elapsed.

Proposed Answer: A

Explanation (Optional):

A. Correct HCL at 900 psig is 160 °F therefore HCL will be reached in 10 minutes at the current heatup rate. CRS in ATWS pressure control directs maintaining RPV pressure within the HCL in Torus temperature cannot be maintained.

B. Incorrect HCL will be exceeded within 10 minutes, so it is incorrect in this situation to wait 15 minutes as the HCL will already be exceeded.

C. Incorrect The ATWS pressure control CRS is appropriate to be invoked to attempt to stay away from an ED required situation before taking action to ED.

D. The ATWS pressure control CRS is appropriate to be invoked to attempt to stay away from an ED required situation before taking action to ED.

Technical Reference(s): Bases ATWS Rev 17

Proposed References to be provided to applicants during examination: None

Learning Objective: (As available)

Question Source: Bank # X 39477

Modified Bank # (Note changes or attach parent)

New

Question History: Last NRC Exam:

Question Cognitive Level: Memory or Fundamental Knowledge

Comprehension or Analysis

10 CFR Part 55 Content: 55.41

55.43

Comments:

QUESTION # 014

Which of the following explains the concern with the Minimum Indicating Level for the RPV water level instruments?

With elevated drywell temperatures...

a. all RPV level instruments may indicate a level even when their reference leg tap is uncovered.

b. all RPV level instruments may indicate a level even when their variable leg tap is uncovered.

c. WR Yarway and Floodup RPV level instruments may indicate a level when their reference leg tap is uncovered.

d. WR Yarway and Floodup RPV level instruments may indicate a level when their variable leg tap is uncovered.

ANSWER: d.

REFERENCE: EOP Curves and Limits, Rev. 13

Proposed References to be provided to applicants during examination: NONE

BANK

FUNDAMENTAL

K/A # 295028 EK1.01: Knowledge of the operational implications of the following concepts as they apply to HIGH DRYWELL TEMPERATURE : Reactor water level measurement.
(CFR: 41.8 to 41.10)

EXPLANATION:

a. Incorrect: DAEC RPV water level instruments sense level by measuring the differential pressure (ΔP) between a reference leg water column and a variable leg water column. The reference leg is kept full of water by a condensing pot replenished with steam from the RPV. The variable leg height depends on RPV water level. When the actual RPV water level decreases, the variable leg height also decreases, causing the sensed ΔP to increase. The higher ΔP results in a lower indicated level. By design, the reference leg remains uncovered. If the reference leg becomes covered, no ΔP is sensed, indicated RPV water level would display maximum indicated water level.
b. Incorrect: Most of the Narrow Range GEMAC and Fuel Zone instrument runs outside the drywell. With the actual RPV water level at the elevation of the variable leg tap, these instruments will read on-scale only at relatively high reactor building temperatures. MILs are therefore unnecessary for the Narrow Range GEMAC and Fuel Zone instruments; as long as the indicated level is on-scale, the actual level must be above the variable leg tap and the instruments can be used to evaluate the level trend.
c. Incorrect: DAEC RPV water level instruments sense level by measuring the ΔP between a reference leg water column and a variable leg water column. The reference leg is kept full of

water by a condensing pot replenished with steam from the RPV. The variable leg height depends on RPV water level. When the actual RPV water level decreases, the variable leg height also decreases, causing the sensed ΔP to increase. The higher ΔP results in a lower indicated level. By design, the reference leg remains uncovered. If the reference leg becomes covered, no ΔP is sensed, indicated RPV water level would display maximum indicated water level.

d. Correct: With actual RPV water level at the elevation of the variable leg tap, the instrument should read downscale low. As drywell temperature rises, however, the resulting change in the density of water in the instrument runs decreases the ΔP between the variable and reference legs. At a drywell temperature of 158 F the change in ΔP is sufficient to begin to drive the indicated level on-scale. DCP-1410 re-routed most of the Narrow Range GEMAC and Fuel Zone instrument runs outside the drywell, therefore only the WR Yarway and Floodup RPV level instruments have MILs outlined in EOP Curves and Limits, Caution #1.

Question 15

Current plant conditions are as follows:

- EOP-1, RPV Control is being executed.
- High Pressure Coolant Injection (HPCI) is operating for RPV Level control per EOP 1.
- Torus Water Level is reported to be 10.1 feet and LOWERING.

Which of the following identifies the Torus Water Level at which HPCI must be secured AND the reason it must be secured?

HPCI must be secured when Torus Water Level reaches:

a. 7.1 feet, to prevent violating Vortex Limits.

b. 7.1 feet, to prevent direct pressurization of the Torus by the HPCI exhaust.

c. 5.8 feet, to prevent violating Vortex Limits.

d. 5.8 feet, to prevent direct pressurization of the Torus by the HPCI exhaust.

K/A #	295030	EA1.05

Ability to operate and/or monitor the following as they apply to LOW SUPPRESSION POOL WATER LEVEL: HPCI

Proposed Answer: D

A: Incorrect – This is a vortex level limit UNLESS directed to use HPCI in EOPs

B: Incorrect – This is above the level that will result in direct pressurization of the torus by the HPCI exhaust.

C: Incorrect – EOP 1 overrides vortex concerns

D: Correct – Per EOP 2 bases step T/L-8 - A torus level of 5.8 feet corresponds to the HPCI turbine exhaust elevation. Direction here attempts to maintain the availability of HPCI should it be needed as an injection source or alternate method of depressurizing the RPV. Operation of the HPCI system with its exhaust device not submerged will directly pressurize the torus.

References to be provided: NONE

BANK

Previous Exams: 2009 DAEC NRC Exam

FUNDAMENTAL

QUESTION # 016

Given the following:

- The plant was operating in at 99% power when rising drywell pressure and lowering Reactor Pressure Vessel (RPV) level resulted in the crew initiating a manual scram.
- High Pressure Core Injection (HPCI) flow could not be established.
- All Residual Heat Removal (RHR) and Core Spray Pumps are running.
- 1C03A(C-6) ADS/LLS 125 VDC CONTROL POWER FAILURE, is lit due to a loss of normal 125 VDC power to Automatic Depressurization System (ADS) logic B.
- RPV water level has just reached 64 inches and continues to lower
- 1C03A (A-7), ADS LO WATER LEVEL CONFIRMED, is NOT lit.

Which of the following describes the expected response of the Automatic Depressurization System 120 seconds later?

a. ADS logic train 'A' and 'B' will open FOUR ADS valves.
b. ADS logic train 'A' will open FOUR ADS valves.
c. ADS logic train 'A' will open TWO ADS valves.
d. ADS logic train 'A' and 'B' will not open ANY ADS valves.

ANSWER:
d.

REFERENCE:
SD-183.1, Automatic Depressurization System and Low-Low Set System, Revision 7
ARP 1C03A (A-7)
ARP 1C03A (C-6)

Proposed References to be provided to applicants during examination: none.

NEW
HIGHER

K/A # 295031.K3.01: Knowledge of the reasons for the following responses as they apply to REACTOR LOW WATER LEVEL: Automatic depressurization system actuation. CFR: 41.5

EXPLANATION:
a. Incorrect: Loss of normal 125 VDC power to ADS logic B results in a transfer to the alternate 125 VDC power source. However, ADS will not initiate without the confirmatory 170" signal present (1C03A (A-7), ADS LO WATER LEVEL CONFIRMED is extinguished).
b. Incorrect: Either ADS logic train will open all four ADS valves. However, ADS will not initiate without the confirmatory 170" signal present.
c. Incorrect: Either ADS logic train will open all four ADS valves. Loss of DC power to one logic train would not cause a half-actuation of the system.
d. Correct: Loss of normal 125 VDC power to ADS logic B results in a transfer to the alternate 125 VDC power source, thus ADS is capable of initiating. The required low-low-low RPV water level has been reached and the required pumps (RHR and/or Core Spray) are running. However, ADS will not initiate without the confirmatory 170" signal present (this

information is provided by the “1C03A (A-7), ADS LO WATER LEVEL CONFIRMED, is NOT lit” in the stem).

QUESTION # 017

Given the following:

- The plant was operating at 40% when a turbine trip occurred.
- The scram signal failed to result in control rod insertion.
- EOP 1 – RPV Control has been exited to ATWS – RPV Control
- Current reactor power is 12%.
- Current torus water temperature is 109°F and rising.

Which of the following describes the requirement for Standby Liquid Control boron injection?

a. required prior to exceeding the torus water Heat Capacity Limit

b. required to offset voiding for RPV depressurization

c. required to offset water density changes for RPV cool down

d. NOT yet required

ANSWER:
a.

REFERENCE:
ATWS – RPV Control, Revision 21
EOP 1 – RPV Control, Revision 18
EOP Graph 6, Revision 7
SD-153, Standby Liquid Control System, Revision 8

Proposed References to be provided to applicants during examination: EOP Graph 6.

NEW
HIGHER

K/A # 295037.A1.04: Ability to operate and/or monitor the following as they apply to SCRAM CONDITION PRESENT AND REACTOR POWER ABOVE APRM DOWNSCALE OR UNKNOWN : SBLC. CFR: 41.7

EXPLANATION:
a. Correct: SBLC needs to be initiated. It is desired to shut down the reactor prior to depressurization, and depressurization must occur before the Heat Capacity Limit is reached. The action to initiate SBLC must occur prior to exceeding the limit of EOP Graph 6. (SD-153 pages 20 - 24).
b. Incorrect: while offsetting the reactivity effects of changes in voiding is a design basis for the SBLC system (SD-153 pages 4-5), and a depressurization will subsequently occur, the required initiation of SBLC with regard to EOP Graph 6 is driven by concern for exceeding the Heat Capacity Limit.
c. Incorrect: while offsetting the reactivity effects of changes in water density is a design basis for the SBLC system (SD-153 pages 4-5), and a cooldown will subsequently occur, the

required initiation of SBLC with regard to EOP Graph 6 is driven by concern for exceeding the Heat Capacity Limit.

d. Incorrect: SBLC boron injection is required prior to torus water temperature exceeding the limit curve of EOP Graph 6 to prevent exceeding the Heat Capacity Limit. (SD-153 pg. 20 and 24). It must be understood that this action is required prior to exceeding the curve, and not afterwards.

EOP Graph 6 (Reference)

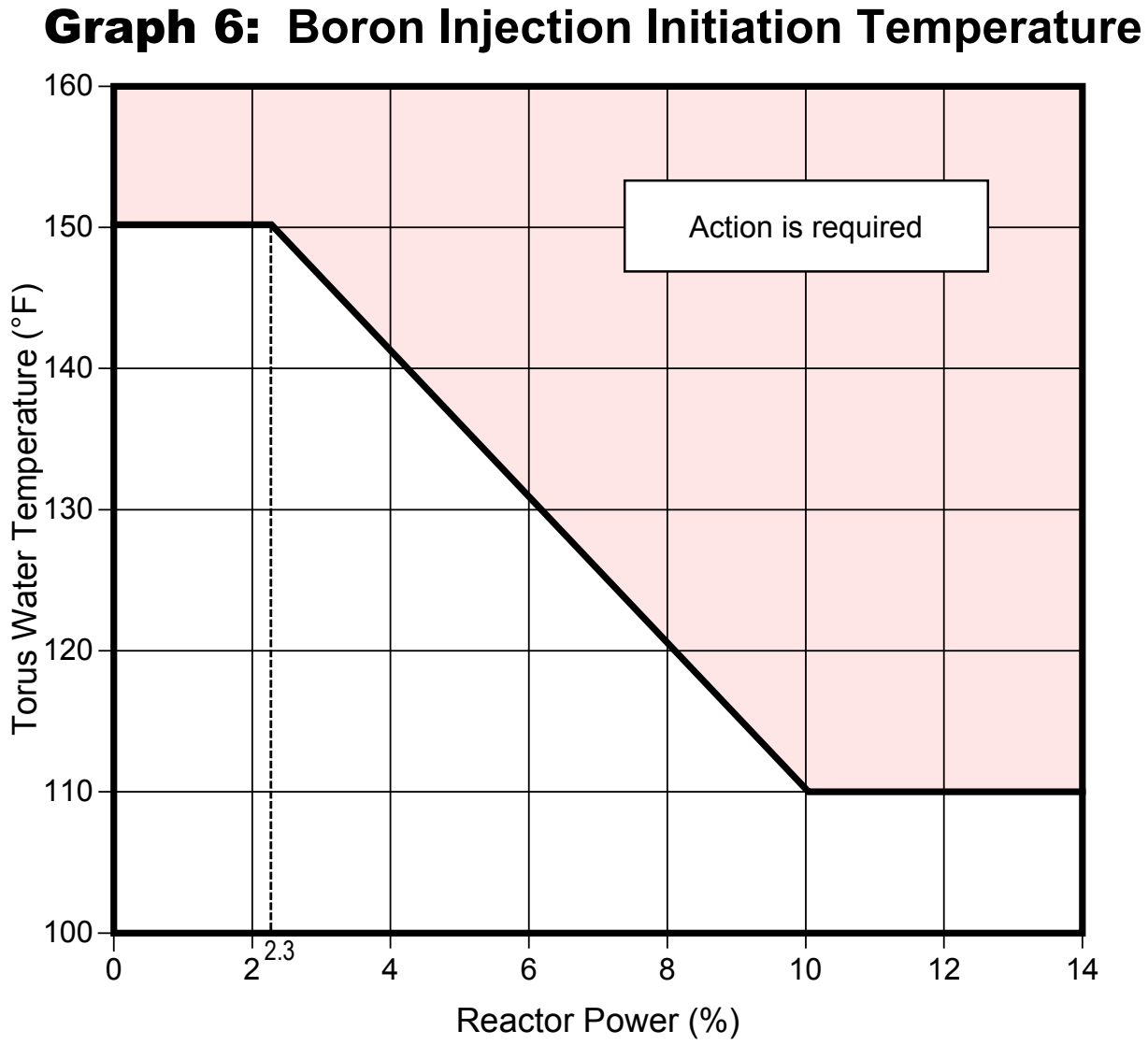

QUESTION # 018

A transient is occurring that requires the Primary Containment to be vented to maintain Torus Pressure below the Primary Containment Pressure Limit (PCPL).

- Torus Pressure is 40 psig and rising slowly
- Torus Water Level is 14 feet
- Emergency Depressurization has been completed

Which one of the following Containment Venting paths should result in the lowest off-site release?

a. Venting the Drywell via the Hard Pipe Vent

b. Venting the Torus Air Space via the Hard Pipe Vent

c. Venting the Drywell via the 2" vent line Standby Gas Treatment System

d. Venting the Torus Air Space via the 2" vent line to Standby Gas Treatment System

ANSWER:
d.

REFERENCE:
SEP 301.1, Torus Vent Via SBGT
SEP 301.2, Drywell Vent Via SBGT
SEP 301.3, Torus Vent Via Hard Pipe Vent
EOP 2 Bases
Technical Support Guideline Appendix C, Containment Venting

Proposed References to be provided to applicants during examination: NONE

NEW

FUNDAMENTAL

K/A 295038 EA 2.01 Ability to determine and/or interpret the following as they apply to HIGH OFF-SITE RELEASE RATE: Off-site CFR: 41.10

EXPLANATION:
a. Incorrect – while physically possible this path has no procedure for use. Additionally this path would not take advantage of scrubbing by the Torus Pool and is unfiltered.
b. Incorrect – This path does take advantage of scrubbing by the Torus Pool but is not filtered and has a larger diameter vent path permitting higher flow rates.
c. Incorrect – This path is filtered by the Standby Gas Treatment System, but does not take advantage of scrubbing by the Torus Pool
d. Correct – This path takes advantage of scrubbing by the Torus Pool and is filtered by the Standby Gas Treatment System.

QUESTION # 019

Given the following:

- The plant is at 30% power during a planned shutdown for refueling.
- 1C40 (F-6), CARDOX PRE-INITIATION ALARM was received, followed shortly thereafter by 1C40 (G-6) CARDOX INITIATED.
- An operator has been dispatched to investigate. No additional information has yet been received from the field.

Based upon the preceding indications, the Control Room operators should do which of the following IMMEDIATELY?

a. evacuate the Control Room.

b. don self-contained breathing apparatuses.

c. initiate a reactor scram.

d. transfer control to panels 1C388, 1C389, 1C390, 1C391, and 1C392.

ANSWER:
b.

REFERENCE:
AOP-913, Fire, Revision 77
AOP-915, Shutdown Outside Control Room, Revision 53
ARP 1C40, Revision 68

Proposed References to be provided to applicants during examination: None

NEW
HIGHER

K/A: Generic 2.4.45 (600000 Plant Fire On Site): Ability to prioritize and interpret the significance of each annunciator or alarm. CFR: 41.10

EXPLANATION:
a. Incorrect: It must be realized that although actuation of a suppression system indicates a potential fire, based upon the stem conditions, the only actions taken until additional information becomes available would be those of the ARP. The need for Control Room evacuation is evaluated subsequently in AOP-915. AOP-913, FIRE, also refers to AOP-915 when a fire exists in the cable spreading room; again there is no actual fire at this point, just suppression system actuation.
b. Correct: The ARP (1C40 G6, CARDOX INITIATED) contains an immediate action for personnel to don SCBAs.
c. Incorrect. AOP-913, FIRE, refers to AOP-915 when a fire exists in the cable spreading room. AOP-915 covers control room evacuation due to fire and non-fire (i.e. toxic atmosphere) events. In either case a reactor scram would be inserted. In this instance however, a fire has not been confirmed in the cable spreading room, nor has a toxic

atmosphere been identified in the Control Room. Thus the required action remains to immediately don SCBAs due to the actuation of the CARDOX suppression system.

d. Incorrect. AOP-913, FIRE, refers to AOP-915 when a fire exists in the cable spreading room. AOP-915 covers control room evacuation due to fire and non-fire (i.e. toxic atmosphere) events. AOP-915 contains a time critical action to transfer control to 1C388, 1C389, 1C390, 1C391, 1C392. In this instance however, a fire has not been confirmed in the cable spreading room, nor has a toxic atmosphere been identified in the Control Room. Thus the required action remains to immediately don SCBAs due to the actuation of the CARDOX suppression system.

QUESTION # 020

Given the following:

- The plant is conducting a startup following a refueling outage.
- The operating crew is preparing to synchronize the main generator to the grid.
- Currently main generator output frequency is 60.1 Hz and grid frequency is 60.0 Hz.
- Due to a disturbance in the Main Generator voltage regulator, voltage downstream of the Main Transformer drops to 160KV while grid voltage remains at 161KV

Which of the following describes the expected impact to MW and VARS loading when the main generator is subsequently synchronized to the grid?

a. The main generator will become both a real load and a reactive load for the grid.

b. The main generator will become a real load, but will supply reactive load, to the grid.

c. The main generator will supply both real load and reactive load to the grid.

d. The main generator will supply real load, and become a reactive load, to the grid.

ANSWER:
d.

REFERENCE:
SD-304, Electrical Power Systems, Revision 19
SD-698, Main Generator, Revision 5

Proposed References to be provided to applicants during examination:

NEW
FUNDAMENTAL

K/A # 700000 K1.01: Knowledge of the operational implications of the following concepts as they apply to GENERATOR VOLTAGE AND ELECTRIC GRID DISTURBANCES: Definition of terms: volts, watts, amps, VARs, power factor. CFR: 41.4, 41.5, 41.7, 41.10

EXPLANATION:
a. Incorrect: generator frequency is higher than grid frequency, and thus the generator will assume real (MW) loading.
b. Incorrect: generator frequency is higher than grid frequency, and thus the generator will assume real (MW) loading. Also, since the voltage regulator disturbance has caused generator output voltage to lower below grid voltage, the generator will become a reactive (VARS) load to the grid instead of supplying VARS.
c. Incorrect: since the voltage regulator disturbance has caused generator output voltage to lower below grid voltage, the generator will become a reactive (VARS) load to the grid instead of supplying VARS.
d. Correct: generator frequency is higher than grid frequency, and thus the generator will assume real (MW) loading. Also, since the voltage regulator disturbance has caused

generator output voltage to lower below grid voltage, the generator will become a reactive (VARS) load to the grid instead of supplying VARS.

QUESTION # 021

Given the following:

- The plant has experienced a station blackout.
- RCIC is operating and supplying water to the RPV.
- RPV level has been gradually rising and has just exceeded 211 inches.

Which of the following will occur DIRECTLY as a result of the conditions described above?

a. MO-2404, TURBINE STEAM SUPPLY, closes.

b. MO-2405, TURB STOP, closes.

c. MO-2512, RCIC INJECT, closes.

d. MO-2400, RCIC INBD STEAM LINE ISOL, closes.

ANSWER:
a.

REFERENCE:
SD-150, Reactor Core Isolation Cooling System, Revision 8
OI-150, Reactor Core Isolation Cooling System, Revision 77
ARP 1C04C, Revision 44
AOP 301.1, Station Blackout, Revision 55

Proposed References to be provided to applicants during examination: None

NEW
HIGHER

K/A # 295008.A1.05: Ability to operate and/or monitor the following as they apply to HIGH REACTOR WATER LEVEL: RCIC. CFR: 41.7

EXPLANATION:
a. Correct: RPV level reaching 211" signals MO-2404 to close (OI-150 page 16)
b. Incorrect: MO-2405 closes in response to RCIC turbine trip signals. RPV high water level does not generate an RPV turbine trip signal. (SD-150 pages 16-18, 23-24).
c. Incorrect: MO-2512 and MO-2404 are interlocked. Closure of MO-2404 causes MO-2512 to close, but only after MO-2404 reaches its shut seat, actuating a limit switch. MO-2512 is not directly actuated by the 211" high level signal; it is controlled by the action of MO-2404 which operates directly in response to RPV high level at 211" (SD-150 pages 21-22).
d. Incorrect: The receipt of a RCIC isolation signal will result in the closure of both MO-2400 and MO-2401 via the action of separate logic trains. High RPV level is not associated with this RCIC isolation feature and secures RCIC via a separate mechanism (SD-150 pages 15 and 24).

QUESTION # 022

Given the following:

- A plant scram has occurred as a result of Main Steam Isolation Valve closure.
- The ATC Operator is controlling level between 10" and 51" with MANUAL operation of the Startup Feedwater Regulating Valve (FWRV).
- The Unit Operator is controlling pressure between 800 and 1000 psig by cycling a Safety/Relief Valve (SRV) as necessary.
- Currently, the following conditions exist:
    - RPV level is stable at 30" with the Startup FWRV closed.
    - RPV pressure is approaching 1000 psig.

Which one of the following describes the expected Reactor Pressure Vessel (RPV) level response as the Unit Operator cycles one SRV open, and then subsequently closed to lower pressure to 800 psig?

Assuming no other operator action, when the SRV is opened, RPV water level will . . .

a. rise when the SRV is opened; when the SRV is closed level will lower and stabilize below 30".

b. rise when the SRV is opened; when the SRV is closed level will stabilize at 30".

c. initially lower, then rise when the SRV is opened; when the SRV is closed level will stabilize at 30".

d. lower when the SRV is opened; when the SRV is closed level will stabilize below 30”.

ANSWER:
a.

REFERENCE:
SD-644, Feedwater System, Revision 14
SD-683, Main Steam & MSIV LTS, Revision 8

Proposed References to be provided to applicants during examination: None

DIRECT FROM BANK (DAEC, source listed as 2004 River Bend NRC Exam, refer to ‘Main Steam System’ exam bank)
HIGHER

K/A# 295009.A2.02: Ability to determine and/or interpret the following as they apply to LOW REACTOR WATER LEVEL: Steam flow/feed flow mismatch. CFR: 41.10

EXPLANATION:

a. Correct: RPV level rises due to core voiding, then drops to below original level due to inventory removed.
b. Incorrect: loss of inventory through SRV results in final level less than original (30").

c. Incorrect: RPV level rises due to core voiding while SRV is open, then drops to below original level due to inventory removed.
d. Incorrect: RPV level rises due to core voiding while SRV is open.

ORIGINAL DAEC BANK QUESTION

(DAEC Main Steam System Bank)

A plant scram has occurred as a result of an MSIV Closure. The ATC Operator is controlling Level between 10" and 51" with MANUAL operation of the Startup Feedwater Regulating Valve. The Unit Operator is controlling pressure between 800 and 1000 psig by cycling an SRV as necessary.
Currently, the following conditions exist:
- RPV level is stable at 30" with the Startup FWRV closed.
- RPV pressure is approaching 1000 psig.

Which one of the following describes the expected RPV level response as the Unit Operator cycles one SRV open, then closed to lower pressure to 800 psig?
Assuming NO OTHER OPERATOR ACTION(S), when the SRV is opened, RPV water level will . . .

A: rise while the SRV is open, then drop and stabilize at a level slightly below 30" when the SRV is closed.

B: rise while the SRV is open, then drop and stabilize at 30" when the SRV is closed.

C: gradually lower, then rise and stabilizes at nearly 30" when the SRV is closed.

D: gradually lower, then stabilize at the level reached at the time the SRV is closed.

Proposed Answer: A
Answer: A

Answer Explanation:
Explanation (Optional):
A: Rises due to core voiding then drops to below original level due to inventory removed.
B: Loss of inventory through SRV results in final level less than original (30")
C: rises due to core voiding while SRV is open
D: rises due to core voiding while SRV is open

QUESTION # 023

The change in power caused by a loss of Feedwater Heating is primarily the result of a(an) …

a. decrease in core void concentration.

b. increase in core void concentration.

c. decrease in reactor coolant temperature.

d. increase in reactor coolant temperature.

ANSWER:
a.

REFERENCE:
USAR Chapter 15, Section 15.1.1.2

Proposed References to be provided to applicants during examination: NONE

NEW

FUNDAMENTAL

K/A 295014 AK 2.04 Knowledge of the interrelations between INADVERTENT REACTIVITY ADDITION and the following: Void concentration. CFR: 41.7

EXPLANATION:
a. Correct – The power increase is caused by the collapse of voids due to the increased core sub-cooling. Also the core void coefficient is more dominant by approximately a factor of ten.
b. Incorrect – Plausible if the candidate believes power will decrease. The power increase is caused by the collapse of voids due to the increased core sub-cooling.
c. Incorrect – Plausible if the candidate believes the power increase is caused by the change in reactor coolant system temperature (moderator temperature coefficient). RCS temperature is relatively constant. Also the core void coefficient is more dominant by approximately a factor of ten.
d. Incorrect – Plausible if the candidate believes power will decrease and is caused by the change in reactor coolant system temperature (moderator temperature coefficient). RCS temperature is relatively constant. Also the core void coefficient is more dominant by approximately a factor of ten.

QUESTION # 024

Given the following:

- The plant was operating at 100% power.
- A maintenance technician performing a test procedure inadvertently initiated a Group 1 isolation.
- The resultant transient caused Safety-Relief Valves (SRV) to lift on high Reactor Pressure Vessel (RPV) pressure.
- After the SRVs close, the operators take NO further action.

At what pressure will the next Safety-Relief Valve open, and what is the associated basis?

a. 1030 psig; to protect the SRV tailpipes from damage.

b. 1030 psig; to prevent reaching the high pressure scram setpoint.

c. 1110 psig; to minimize cycling of the other SRVs.

d. 1110 psig; to protect the RPV from over-pressurization.

ANSWER:
a.

REFERENCE:
SD-183.1, Automatic Depressurization System and Low-Low Set System, Revision 7

Proposed References to be provided to applicants during examination: None

MODIFIED FROM BANK (DAEC, listed as a past Audit question, refer to 'Supervise Plant Operations' portion of facility bank)
FUNDAMENTAL

K/A# 295020.K1.01: Knowledge of the operational implications of the following concepts as they apply to INADVERTENT CONTAINMENT ISOLATION: Loss of normal heat sink. CFR: 41.8 to 41.10

EXPLANATION:

a. Correct: a scram signal would be initiated from the MSIV closure, but pressure will rise rapidly due to the steam being bottled up and a high pressure scram signal will be generated at 1055 psig. Pressure will continue to rise since there has been no release of energy and all six of the Safety/Relief Valves will open. The LLS valve logic is now armed and will remain armed until manually reset. Since reactor pressure will be greater than the open setpoint for the LLS valves (the lowest SRV actuation pressure is 1110 psig and the open setpoints for the LLS valves are 1030 psig and 1035 psig) the LLS valves will get an open signal. As pressure comes down below the reset setpoint, the ADS SRVs will shut, but the LLS valves will remain open until they reach their shut setpoint of 915 psig for the high valve and 910 psig for the low valve. At 910 psig all SRVs will close and pressure will begin to rise. When pressure reaches 1030 psig, the low LLS valve will open to control

pressure and lower the vessel pressure back down to 910 psig. This will continue until equilibrium is reached or some other method of pressure control such as RCIC or HPCI is placed in service (SD-183.1 pages 12-13). Also, the purpose of the Low-Low Set System is to mitigate the induced high frequency loads on the containment and thrust loads on the SRV discharge lines (SD-183.1 page 4).

b. Incorrect: the high pressure scram setpoint is 1055 psig, but a scram would have already occurred due to MSIV closure (SD-183.1 pages 12-13).
c. Incorrect: the low LLS valve setpoint is 1030 psig. 1110 psig is the SRV setpoint. (SD-183.1 pages 12-13).
d. Incorrect: the low LLS valve setpoint is 1030 psig. 1110 psig is the SRV setpoint. (SD-183.1 pages 12-13).

ORIGINAL DAEC BANK QUESTION

An I&C tech performing an STP inadvertently initiated a Group 1 isolation while at full power. The resultant transient lifted four Safety-Relief Valves, including the two low-low set valves, on high RPV pressure.

After these valves close, as indicated by their associated amber lights extinguishing, the operators take no further action.
At WHAT PRESSURE will the next Safety-Relief Valve open and WHY?

A. 1020 psig; to protect the SRV tailpipes from damage.

B. 1020 psig; to prevent reaching the high pressure scram setpoint.

C. 1110 psig; to minimize cycling of the other SRVs.

D. 1110 psig; to protect the reactor from overpressurization.
Answer: A

QUESTION # 025

Given the following:

- Indications of a pipe break in the drywell and rising Suppression pool area ambient temperatures on TR 2742 are observed.
- RCIC and HPCI pumps are operating and supplying water to the RPV.
- STEAM LEAK DET AMBIENT HI TEMP was received.
- Suppression Pool area ambient temperatures reached 151°F twenty (20) minutes ago.

Assuming no operator action, which of the following describes the expected response of the RCIC and HPCI pumps?

a. Both HPCI and RCIC pumps will have tripped.

b. Only the HPCI pump will have tripped.

c. Only the RCIC pump will have tripped.

d. Neither the HPCI nor RCIC pumps will have tripped.

ANSWER:
b.

REFERENCE:
ARP 1C04B, Revision 79
SD-150, Reactor Core Isolation Cooling System, Revision 8
SD-152, High Pressure Coolant Injection System, Revision 13
SD-858, Steam Leak Detection, Revision 7

Proposed References to be provided to applicants during examination: None

NEW
HIGHER

K/A # 295032.A1.01: Ability to operate and/or monitor the following as they apply to HIGH SECONDARY CONTAINMENT AREA TEMPERATURE : Area temperature monitoring system.
CFR: 41.7

EXPLANATION:
a. Incorrect: Suppression Pool ambient temperature instruments will supply inputs to both HPCI and RCIC isolation logic circuits at 150F. Both pumps have isolation circuitry with timers that will begin counting down when this input is received. HPCI and RCIC have different time delays however; 15 min for HPCI and 30 min for RCIC. At the 15 minute point on the HPCI pump would trip (SD-858 pages 9-10).
b. Correct. Suppression Pool ambient temperature instruments will supply inputs to both HPCI and RCIC isolation logic circuits at 150F. Based upon timer settings, HPCI isolation (which causes a pump trip) will occur after 15 minutes (SD-858 pages 9-10).
c. Incorrect: Suppression Pool ambient temperature instruments will supply inputs to both HPCI and RCIC isolation logic circuits at 150F. Based upon timer settings, HPCI isolation

(which causes a pump trip) will occur after 15 minutes. RCIC isolation will occur at the 30 minute point (SD-858 pages 9-10).

d. Incorrect: Suppression Pool ambient temperature instruments will supply inputs to both HPCI and RCIC isolation logic circuits at 150F. Both pumps have isolation features (that result in pump trips) which are set to time delay. The time delays are 15 min for HPCI and 30 min for RCIC (SD-858 pages 9-10).

Question 26

A plant event resulted in a steam leak into secondary containment and rising secondary containment ventilation radiation levels and release rates. The Control Room Supervisor has entered EOP 3 “Secondary Containment Control.”

What purpose does the reactor scram and emergency depressurization achieve in EOP 3?

a. It allows establishment of adequate core cooling using low pressure ECCS pumps.

b. It reduces the energy in the RPV before reaching conditions where the primary containment will not accommodate an SRV opening.

c. It places the primary system in a low energy condition to reduce the driving head of the leak.

d. It places the RPV in a low energy condition before reaching conditions where a loss of coolant accident could not be adequately quenched in the primary containment.

Answer: C

K/A # 295034 EK3.05 - Knowledge of the reasons for the following responses as they apply to SECONDARY CONTAINMENT VENTILATION HIGH RADIATION: Manual SCRAM and depressurization: Plant-Specific

A: Incorrect – This is not the purpose of ED for this event. This would be correct in the event of a LOCA and lowering level.

B: Incorrect – Containment parameters such as increasing drywell pressure are not an issue in the described event. Accommodating SRV openings is not an issue for this event.

C: Correct - Scramming the reactor reduces the energy that the RPV may be discharging to the secondary containment to decay heat levels. If the RPV is the source of energy, radiation or water being released to secondary containment, scramming the reactor should greatly reduce any further release and may prevent the need for the more severe action of emergency depressurizing the RPV. RPV depressurization places the primary system in its lowest possible energy state, rejects heat to the torus in preference to outside the containment, and reduces the driving head and flow of primary systems that are unisolated and discharging into the secondary containment.

D: Incorrect – The concern is not a LOCA in EOP 3.

BANK

FUNDAMENTAL

REFERENCE: EOP 3 bases

Question Source: DAEC NRC Exams - 2002 and 2009

Proposed References to be provided to applicants during examination: NONE

QUESTION # 027

Given that a detectable level of Hydrogen exists in the Torus, which one of the following describes the approved method for reducing the Hydrogen concentration?

a. Vent the Torus to reduce the Hydrogen concentration.

b. Dilute the Hydrogen concentration by increasing the Nitrogen concentration via the Nitrogen Purge Vaporizer

c. Vent the Torus to reduce Hydrogen concentration and restore Nitrogen concentration via Nitrogen Purge Vaporizer

d. Dilute Torus Hydrogen concentration by operating one of the Pump-back Compressors to mix the Drywell and Torus atmospheres.

ANSWER:
c.

REFERENCE:
Lesson Plan 50000-573, Primary Containment and Auxiliaries Systems
SEP 303.2, N_2 Purge for H_2 Control in SAGs

Proposed References to be provided to applicants during examination: NONE

NEW

FUNDAMENTAL

K/A 500000 EK 3.01 Knowledge of the reasons for the following responses as they apply to HIGH PRIMARY CONTAINMENT HYDROGEN CONCENTRATIONS: Initiation of containment atmosphere control system. CFR: 41.5

EXPLANATION:
a. Incorrect – Venting will reduce the H2 concentration but will also reduce the N2 concentration and may lower Torus pressure below operational limits.
b. Incorrect – May reduce H2 concentration but will result in raising Torus above the operation limit.
c. Correct – Will reduce H2 concentration, maintain N2 concentration and maintain pressure within operational limits.
d. Incorrect – may reduce Torus H2 concentration but is not a procedurally approved method.

QUESTION # 028

With the “A” Loop of Residual Heat Removal (RHR) in Shutdown Cooling, the following annunciators were received:

- 1C03B, A-5, LPCI HI DRYWELL PRESS
- 1C03B, A-2, “A” RHR PUMP 1P-229A TRIP
- 1C03B, A-3, “C” RHR PUMP 1P-229C TRIP
- 1C03B, D-4, “A/B” RHR HX RHR INLET HI TEMP

At the time, the following conditions existed:

- Drywell pressure was 3 psig
- RHR Heat Exchanger inlet temperature was 350°F

Which of the following was the reason for the RHR pump trips? To prevent…

a. water hammer to piping on pump auto start.

b. pump damage due to cavitation.

c. overpressurization of the low pressure Shutdown Cooling piping.

d. thermal shock to the vessel due to cold water injection on pump auto start.

ANSWER:
b.

REFERENCE:

Proposed References to be provided to applicants during examination: NONE

BANK (2001 RO NRC Exam)

HIGHER

K/A # 203000 RHR/LPCI Injection Mode K4.13: Knowledge of RHR/LPCI: INJECTION MODE (PLANT SPECIFIC) design feature(s) and/or interlocks which provide for the following: Adequate pump net positive suction head (interlock suction valve open): Plant-Specific
CFR: 41.7

EXPLANATION:
a. Incorrect: RHR Pump breakers will not close in due to the suction path interlock.
b. Correct: Caused by a loss of NPSH.
c. Incorrect: The Group 4 Isolation signal (135 psig) does this function.
d. Incorrect: RHR Pump breakers will not close in due to the suction path interlock AND RHR pump Suction valves do not automatically open.

ORIGINAL QUESTION

With the “A” Loop of RHR in Shutdown Cooling, the following annunciators were received:

1C03B, A-5, LPCI HI DRYWELL PRESS
then:
1C03B, A-2, “A” RHR PUMP 1P-229A TRIP
1C03B, A-3, “C” RHR PUMP 1P-229C TRIP
1C03B, D-4, “A/B” RHR HX RHR INLET HI TEMP

Drywell pressure is 3 psig
RHR Hx inlet temperature is 350°F

What was the reason for the RHR pump trips?

a. prevent RHR pump damage due to cavitation caused by a loss of NPSH
b. prevent water hammer to piping when the RHR pumps try to auto start
c. prevent overpressurization of the low pressure Shutdown Cooling piping
d. prevent a thermal shock to the vessel due to injection of cold water from the torus when the RHR pumps auto start

ANSWER: a

Distracter 1: RHR Pump breakers will not close in due to the suction path interlock.
Distracter 2: The Group 4 Isol signal 135 psig does this function.
Distracter 3: RHR Pump breakers will not close in due to the suction path interlock.
RHR pump Suction valves do not automatically open

QUESTION # 029

Given the following:

- The plant is in Cold Shutdown with irradiated fuel in the vessel
- Shutdown Cooling (SDC) flow is 3500 gpm
- Reactor water level is 220 inches, as indicated on LI-4541 (WR GEMAC, FLOODUP)

Which of the following is required and why?

a. Maintain current Reactor water level; it is above the minimum natural circulation level.

b. Raise Reactor water level; it is below the minimum natural circulation level.

c. Raise Reactor water level; a “Time to Boil” calculation is required.

d. Maintain current Reactor water level; SDC flow must be increased.

ANSWER:
a.

REFERENCE: Initial Systems Lesson Plan 149.0, RHR, Rev.0

Proposed References to be provided to applicants during examination: NONE

BANK

HIGHER

K/A # 205000 Shutdown Cooling, K5.03: Knowledge of the operational implications of the following concepts as they apply to SHUTDOWN COOLING SYSTEM (RHR SHUTDOWN COOLING MODE): Heat removal mechanisms. CFR: 41.5

EXPLANATION:
a. Correct: If the plant is in the Cold Shutdown condition, with irradiated fuel in the vessel, and forced circulation is unavailable or Shutdown Cooling flow is less than 4000 gpm, maintain Reactor water level above the minimum natural circulation level, 214 inches, as indicated on LI-4541 (WR GEMAC, FLOODUP) on 1C04, to ensure natural circulation.
b. Incorrect. The minimum natural circulation level is 214 inches. While raising the level above this level may be prudent at some point, it is not required now.
c. Incorrect. This calculation is required prior to planned outages of SDC, and it is not a reason for raising water level above its current value.
d. Incorrect. The minimum SDC flow is 4000, so increasing it would be desirable at some point, however, it is not the reason for maintaining level at this time.

QUESTION 30

Following a reactor scram, the following conditions exist:

- Reactor level +190 inches
- Reactor pressure 139 psig
- Drywell pressure 1.72 psig

Based upon the given conditions, which ONE of the following Residual Heat Removal valves is interlocked closed/prevented from opening?

A. MO-2006, RHR LOOP “A” TORUS SPRAY HEADER ISOLATION

B. MO-1908, RHR SHUTDOWN COOLING ISOLATION VALVE

C. MO-2007, RHR LOOP A TORUS COOLING AND TEST RETURN HDR ISOLATION

D. MO-1940, RHR HX 1E-201B BYPASS VALVE

Answer: B

K/A # 205000, K1.01 - Knowledge of the physical connections and/or cause- effect relationships between SHUTDOWN COOLING SYSTEM (RHR SHUTDOWN COOLING MODE) and the following: Reactor pressure. IR = 3.6

Explanation:

A. Incorrect – For the given conditions MO-2006 is able to be opened, the valve is isolated when containment pressure is > 2 psig. This is plausible because the candidate may assume that a high drywell pressure is needed to place torus sprays in service.

B. Correct - Of the signals listed; only the reactor pressure signal causes an RHR isolation/interlock. This high-pressure interlock prevents the SDC section of piping from being over pressurized. A reactor pressure of approximately 135 psig (per ARP 1C03B B-4 this pressure is approximately 100 psig) initiates an isolation of SDC suction valves MO-1908 and 1909. The LPCI piping is also protected from over pressurization, but the setpoint is 450 psig.

C. Incorrect – For the given conditions MO-2007 is able to be opened, the valve is isolated when containment pressure is > 2 psig. This is plausible because the candidate may assume that a high drywell pressure is needed to place torus sprays in service.

D. Incorrect – MO-1940 has an automatic open function on a LPCI initiation signal. It does NOT have an auto close function.

REFERENCES:

ARP 1C05B, D-8

SD-149, Rev. 13, RESIDUAL HEAT REMOVAL SYSTEM, pages. 31-34

Proposed References to be provided to applicants during examination: NONE

BANK

QUESTION HISTORY: DAEC NRC 2013 RO WRITTEN EXAM

FUNDAMENTAL

10 CFR Part 55 Content: 41.5

QUESTION # 031

Given the following:

- The plant was operating at 100% power when a loss of coolant occurred.
- Reactor Pressure Vessel (RPV) Pressure is currently 400 pounds.
- RHR and Core Spray pumps are running.
- RPV level is currently +20 inches and continues to lower.

Based on the conditions above, which of the following actions should operators take with regard to Emergency Depressurization (ED) AND what is the status of the High Pressure Core Injection (HPCI) system?

a. ED immediately / HPCI has failed.

b. ED when RPV level is +15 to -24 inches / HPCI has failed.

c. ED once RPV level is below -25 inches / HPCI has failed.

d. ED should not be performed / HPCI has NOT failed.

ANSWER:
b.

REFERENCE:
EOP 1 – RPV Control, Revision 18
DAEC EOP Bases Document, EOP 1 – RPV Control Guideline, Revision 16
SD-152, High Pressure Coolant Injection System, Revision 13
SD-183.1, Automatic Depressurization System and Low-Low Set, Revision 7

Proposed References to be provided to applicants during examination: None

NEW
HIGHER

K/A #206000.K6.12: Knowledge of the effect that a loss or malfunction of the following will have on the HIGH PRESSURE COOLANT INJECTION SYSTEM: Reactor water level. CFR: 41.7

EXPLANATION:
a. **Incorrect: If an injection source is available, the blowdown should be delayed at least until RPV water level reaches the top of the active fuel (+15 in).** If it is believed that available injection systems are capable of restoring and maintaining RPV water level above the Minimum Steam Cooling RPV Water Level following RPV depressurization, the blowdown may be performed as soon as RPV water level reaches the top of the active fuel. (EOP 1 Bases, pages 36 -37)
b. **Correct: If an injection source is available, the blowdown should be delayed at least until RPV water level reaches the top of the active fuel (+15 in), but may be performed anytime RPV water level is between the top of the active fuel and the Minimum Steam Cooling RPV Water Level (-25 in).** If it is believed that available injection systems are

capable of restoring and maintaining RPV water level above the Minimum Steam Cooling RPV Water Level following RPV depressurization, the blowdown may be performed as soon as RPV water level reaches the top of the active fuel. (EOP 1 Bases, pages 36 -37)

c. **Incorrect:** The core will remain adequately cooled as long as RPV water level remains above the MSCRWL (-25 in.) **The MSCRWL (-25 in.) is the lowest RPV water level at which the covered portion of the reactor core will generate sufficient steam to preclude any clad temperature in the uncovered portion of the core from exceeding 1500°F.** (EOP 1 Bases, pages 36 -37)

d. **Incorrect:** the HPCI system would have needed to **fail to automatically start at the low-low RPV water level setpoint of 119.5 inches** for current RPV water to level to 20 inches and lowering with RPV pressure still at 400 psig. It must be recognized that HPCI has failed and that now emergency depressurization will be required when the appropriate RPV level is reached (SD-152 pages 18-22).

QUESTION # 032

Given the following:

- The plant was operating at 50% power when rising drywell pressure resulted in a scram.
- 1C03C (A3), HPCI AUTO INITIATED, was lit and flow to the RPV from HPCI was observed.
- HPCI steam line pressure was 900 psig, HPCI steam line flow was 125%, and HPCI turbine exhaust pressure was 100 psig.
- Subsequently, 1C03C (A4), HPCI TURBINE TRIPPED, lit and flow to the RPV from HPCI was observed to stop.
- 1C03C (A5), HPCI TURBINE TRIP SOLENOID ENERGIZED, was NOT lit.

Which of the following identifies the cause of the HPCI pump trip?

a. Turbine Exhaust Pressure High

b. Steam Line Flow High

c. Steam Line Pressure Low

d. Turbine Overspeed

ANSWER:
d.

REFERENCE:
ARP 1C03C, Revision 41
OI-152, High Pressure Coolant Injection System, Revision 110
SD-152, High Pressure Coolant Injection System, Revision 13

Proposed References to be provided to applicants during examination: None.

HIGHER
NEW

K/A # 206000.A3.01: Ability to monitor automatic operations of the HIGH PRESSURE COOLANT INJECTION SYSTEM including: Turbine speed. CFR: 41.7

EXPLANATION:
a. Incorrect: High turbine exhaust pressure would energize the turbine trip solenoid and cause ARP 1C03C (A 5), HPCI TURBINE TRIP SOLENOID ENERGIZED, to illuminate. Also, turbine exhaust pressure is provided in the stem at 100 psig, but the trip does not occur until 140 psig. (SD-152 pages 20-27 and 1C03C A-5/B-5)
b. Incorrect: High HPCI Steamline Flow will result in a HPCI Isolation signal from both HPCI Isolation logic trains. This in turn will cause a trip via the turbine trip solenoid. Also, steam line flow is given in the stem at 125%, but the trip does not occur until 300%. (SD-152 pages 20-27 and 1C03C A-4/B-8)
c. Incorrect: Low HPCI Steam Line Pressure would energize the turbine trip solenoid and cause ARP 1C03C (A 5), HPCI TURBINE TRIP SOLENOID ENERGIZED, to illuminate.

Also steamline pressure is given in the stem as 900 psig, but the trip occurs at a setpoint of 50 psig < P < 100psig. (SD-152 pages 20-27 and 1C03C A-5)

d. Correct: 1C03C (A 4), HPCI TURBINE TRIPPED, contains a note informing which states that ARP 1C03C (A 5), HPCI TURBINE TRIP SOLENOID ENERGIZED, will remain clear if the trip results from turbine mechanical overspeed. As described in SD-152 (pages 22-24), the HPCI turbine overspeed trip operates via a mechanical mechanism that is independent of the solenoid trip functions.

QUESTION # 033

Given the following:

- The plant was operating at 100% power with the Core Spray system in a normal standby lineup.
- A loss of offsite power occurred and Standby Diesel Generator 1G31 failed to start automatically.
- Subsequently a loss of coolant accident occurred and RPV water level lowered to the Lo-Lo-Lo setpoint.

QUESTION

Which of the following Core Spray valves would be expected to reposition to the open position in response to the conditions above?

a. 1P-211A INBD Inject Valve MO-2117

b. 1P-211B OUTBD Inject Valve MO-2135

c. 1P-211B INBD Inject Valve MO-2137

d. 1P-211A OUTBD Inject Valve MO-2115

ANSWER:
c.

REFERENCE:
OI-151A1, Core Spray System Electrical Lineup, Revision 3
SD-151, Core Spray System, Revision 6
SD-304, Electrical Power System, Revision 19

Proposed References to be provided to applicants during examination: None

NEW
HIGHER

K/A # 209001.K2.02: Knowledge of electrical power supplies to the following: Valve power.
CFR: 41.2 to 41.9

EXPLANATION:
a. Incorrect: MO-2117 would normally open automatically under these conditions, however, failure of Standby Diesel Generator 1G31 concurrent with a loss of offsite power would leave the associated power supply (Essential Bus 1B34) de-energized. (SD-151 pages 11 through 18, SD-304 page 24, and OI-151A1 page 5).
b. Incorrect: MO-2135 will automatically open if closed, similar to MO-2137. It remains powered in this scenario via Standby Diesel Generator 1G21 powering Essential Bus 1B44. The difference is that MO-2135 is a normally open valve and would be expected to already be open based upon understanding the system alignment implied by the initial conditions in the stem. (SD-151 pages 11 through 18, SD-304 page 24, and OI-151A1 page 5)

c. Correct: MO-2137 will open automatically under these conditions, in spite of the loss of offsite power, Standby Diesel Generator 1G21 will supply power to the power supply for this valve (Essential Bus 1B44). (SD-151 pages 11 through 18, SD-304 page 24, and OI-151A1 page 5).
d. Incorrect: MO-2115 is normally open; however in the event that it was closed it would automatically open under these circumstances. This will not occur in any case in this scenario since failure of Standby Diesel Generator 1G31 concurrent with a loss of offsite power would leave the associated power supply (Essential Bus 1B34) de-energized. (SD-151 pages 11 through 18, SD-304 page 24, and OI-151A1 page 5).

QUESTION # 034

The plant was operating at 100% when a recirc line break occurred.

- Reactor pressure is at 410 psig and stable
- Drywell Pressure is at 3.4 psig and rising slowly
- Reactor level is at 60 inches and rising slowly
- Core Spray pumps are running
- Core Spray Valves INBD INJECT MO-2117 and MO-2137 are closed
- Core Spray MIN FLOW BYPASS VALVES MO-2104 and MO-2124 are open

Which of the following describes the response of the Core Spray System and actions required, if any, in regard to INBD INJECT VALVES and MIN FLOW BYPASS VALVES?

a. The Core Spray Inboard Injection Valves should have opened and must be manually opened.
The Core Spray Min Flow Bypass Valves will auto-close ONLY when the Injection Valves are fully open.

b. The Core Spray Inboard Injection Valves are closed and will open once reactor pressure lowers to below the shut off head of the Core Spray pumps.
The Core Spray Min Flow Bypass Valves will auto-close when Core Spray system flow reaches 600 gpm.

c. The Core Spray Inboard Injection Valves should have opened and must be manually opened.
The Core Spray Min Flow Bypass Valves will auto-close when Core Spray system flow reaches 600 gpm.

d. The Core Spray Inboard Injection Valves are closed and will open once reactor pressure lowers to below the shut off head of the Core Spray pumps.
The Core Spray Min Flow Bypass Valves will auto-close ONLY when the Injection Valves are fully open.

ANSWER:
c.

REFERENCE:
OI 151, Rev 74; AUTOMATIC STARTUP/INITIATION OF THE CORE SPRAY SYSTEM, Steps 4.0 (2) and (3).

Proposed References to be provided to applicants during examination: NONE

BANK (2009 NRC Exam)

HIGHER

K/A # 209001 LPCS, A2.08: Ability to (a) predict the impacts of the following on the LOW PRESSURE CORE SPRAY SYSTEM; and (b) based on those predictions, use procedures to

correct, control, or mitigate the consequences of those abnormal conditions or operations: Valve openings malfunctions. CFR 41.5

EXPLANATION:

A: Incorrect – The min flow bypass valve will close when system flow reaches 600 gpm

B: Incorrect - The injection valves should have opened at 450 psig RPV pressure and must be opened manually based on the step stating to “verify” they open.

C: Correct – OI 151, pages 6 and 7, steps 4.0 (2) and (3). When system flow reaches 600 gpm, as indicated on (A[B] CORE SPRAY PUMP) INJECT/TEST FLOW indicator FI-2110 [FI-2130] on Panel 1C03, verify MIN FLOW BYPASS MO-2104 [MO-2124] valve CLOSES.
When reactor vessel pressure drops below the low pressure permissive setpoint of 450 psig, verify that the INBD INJECT MO-2117 [MO-2137] valves OPEN to inject to the reactor vessel.

The injection valves should have opened at 450 psig RPV pressure and must be opened manually based on the step stating to “verify” they open.

D: Incorrect - The injection valves should have opened at 450 psig RPV pressure and must be opened manually based on the step stating to “verify” they open.
The min flow bypass valve will close when system flow reaches 600 gpm.

QUESTION # 035

Given the following:

- The plant was operating at 100% when an Anticipated Transient Without Scram (ATWS) occurred.
- Standby Liquid Control (SBLC) was initiated, and both SBLC pumps were verified to be operating and delivering their design flow.
- Thirty five (35) minutes after SBLC initiation, tank level is checked and observed to be zero (0) on Control Room Panel 1C05.

Based upon these conditions, the SBLC tank level _____.
At the present time, an _____ quantity of boron has been added.

a. is empty
   adequate

b. is empty
   inadequate

c. indication has failed
   adequate

d. indication has failed
   inadequate

ANSWER:
d.

REFERENCE:
ARP 1C05A, Revision 78
AOP 518, Failure of Instrument and Service Air, Revision 34
SD-153, Standby Liquid Control System, Revision 8

Proposed References to be provided to applicants during examination: None

NEW
HIGHER

K/A # 211000.A4.01: Ability to manually operate and/or monitor in the control room: Tank level.
CFR: 41.7

EXPLANATION:
a. Incorrect: each SBLC pump is designed to supply 26.2 gpm. Both pumps are operated by a common switch and running together would deliver approximately 52.4 gpm. After 35 minutes, this would have introduced a maximum of 1834 gallons of boron to the RPV. The tank would not yet indicate zero based on actual inventory (when the low level alarm actuates, 2600 gallons remain in the tank; this alarm is not provided as illuminated in the initial conditions). Additionally, the required available quantity of boron is a function of concentration, but is always greater than 2000 gallons. Thus adequate boron could not yet have been added in this case regardless of concentration, temperature, etc. (SD-153 pages 6 -15).
b. Incorrect: each SBLC pump is designed to supply 26.2 gpm. Both pumps are operated by a common switch and running together would deliver approximately 52.4 gpm. After 35 minutes, this would have introduced a maximum of 1834 gallons of boron to the RPV. The tank would not yet indicate zero based on actual inventory (when the low level alarm

actuates, 2600 gallons remain in the tank; this alarm is not provided as illuminated in the initial conditions). (SD-153 pages 6 -15)

c. Incorrect: level indication for the SBLC tank is supplied by a bubbler which is in turn supplied by instrument air. A failure of the air supply to this bubbler would cause the indicator to fail low regardless of actual tank level (SD-153 page 8 and AOP-518 page 9). Each SBLC pump is designed to supply 26.2 gpm. Both pumps are operated by a common switch and running together would deliver approximately 52.4 gpm. After 35 minutes, this would have introduced a maximum of 1834 gallons of boron to the RPV. The required available quantity of boron is a function of concentration, but is always greater than 2000 gallons. Thus adequate boron could not yet have been added in this case regardless of concentration, temperature, etc.(SD-153 pages 6 -15).

d. Correct: level indication for the SBLC tank is supplied by a bubbler which is in turn supplied by instrument air. A failure of the air supply to this bubbler would cause the indicator to fail low regardless of actual tank level. (SD-153 page 8 and AOP-518 page 9)

QUESTION # 036

The reactor is operating at 100% power. With RPV Water level at 195 inches, HPCI started due to a VALID signal.

Which ONE of the following describes the effect of this actuation on the plant and the required procedure entry?

a. The reactor will scram when RPV Water Level rises to 211 inches, which requires entry into IPOI-5, Reactor Scram ONLY.

b. The reactor will immediately scram; it is required to enter EOP-1, RPV Control AND EOP-2, Primary Containment Control.

c. The reactor will immediately scram; it is required to enter EOP-1, RPV Control ONLY.

d. The reactor will scram when APRM Power Level rises, which requires entry into EOP-1, RPV Control, AND IPOI-5, Reactor Scram.

ANSWER:
b.

REFERENCES: 2007 NRC EXAM, ARP 1C05B A-1, EOP-1, and EOP-2.

Proposed References to be provided to applicants during examination: NONE

BANK

HIGHER

K/A # 212000 RPS, 2.4.2: Knowledge of how abnormal operating procedures are used in conjunction with EOPs. CFR: 41.10

EXPLANATION:
a. Incorrect. Plausible; would be true for a Manual HPCI Start resulting in overfeed.
b. Correct. HPCI Auto Start with RPV Water Level at 195 inches implies Drywell Pressure > 2.0 psig. The reactor will immediately scram, EOP-1 and EOP-2 entry are required with Drywell Pressure > 2.0 psig.
c. Incorrect. Plausible: would be true for Low RPV Water Level (119.5 inches) HPCI start signal, excluded by RPV Water Level at 195 inches.
d. Incorrect. Plausible: would be true for a spurious HPCI start, reactivity addition would cause APRM Power to rise, excluded by valid HPCI start signal.

Question #037

The plant is in Mode 2.

With the "B" Intermediate Range Monitor (IRM) bypassed, which SET of "B" IRM indications are as described below?

1 – ALL "B" IRM 1C05 indicating lamps on the Reactor Control Benchboard are defeated

2 – ALL "B" IRM outputs from the sequence recorder are defeated

3 – ALL "B" IRM outputs to the annunciators are defeated

4 – ALL "B" IRM channel inputs to SPDS remain available

5 – ALL 1C36 indications for the "B" IRM are defeated

A. 1, 3, 5

B. 2, 3, 4

C. 1, 2, 4

D. 2, 3, 5

Answer: B

K/A# 215003 K1.04; Knowledge of the physical connections and/or cause effect relationships between INTERMEDIATE RANGE MONITOR (IRM) SYSTEM and the following: Process computer / performance monitoring system (SPDS/ERIS/CRIDS/GDS). CFR: 41.2 to 41.9

REFERENCES:

OI-878.2 rev 24, NOTE page 12;

SD 878.2 rev 9, IRM System.

Proposed References to be provided to applicants during examination: None

MODIFIED BANK (DAEC) – 2011 NRC Exam Question

HIGHER

Distractor Explanations:

A. Incorrect - The Retract Permit Lamp will remain LIT on 1C05 as long as the IRM channel is bypassed and the IRM detector is not full out. ALSO, Panel 1C-36 has an IRM BYPASSED light for each of the six IRM channels.

B. Correct - When an IRM channel is bypassed, the following IRM functions are <u>defeated</u>:

a. The IRM UPSCALE trip to Reactor Protection System.

b. The IRM associated trips to the rod withdrawal block circuits of the Reactor Manual Control System.

c. The IRM outputs to the annunciator <u>and</u> sequence recorder.

d. The IRM outputs to the indicating lamps on the Reactor Control Benchboard. The Retract Permit Lamp will remain ON as long as the IRM channel is bypassed and the IRM detector is not full out.

C. Incorrect - The Retract Permit Lamp will remain LIT on 1C05 as long as the IRM channel is bypassed and the IRM detector is not full out..

D. Incorrect - Panel 1C-36 has an IRM BYPASSED light for each of the six IRM channels.

QUESTION # 038

Given the following:

- A plant startup is in progress.
- Source Range Monitors (SRM) are completely inserted into the core.
- Power is lost to 24 VDC Distribution Panel 1D60.

Based on the conditions above, which of the following SRMs would be expected to have lost power?

a. SRMs ‘A’ AND ‘B’

b. SRMs ‘A’ AND ‘C’

c. SRMs ‘B’ AND ‘D’

d. SRMs ‘C’ AND ‘D’

ANSWER:
c.

REFERENCE:
SD-375, Plant DC Power Supply System, Revision 8
SD-878.1, Source Range Monitoring System, Revision 7

Proposed References to be provided to applicants during examination: None

NEW
FUNDAMENTAL

K/A # 215004.K2.01: Knowledge of electrical power supplies to the following: SRM channels/detectors. CFR: 41.7

EXPLANATION:
a. Incorrect: the failure of 1D60 (24 VDC Division II) will cause a loss of power to SRMs B and D. SRMs ‘A’ and ‘C’ are powered off of 1D50 (24 VDC Division I) and would still have power. (SD-878.1 page 28)
b. Incorrect: the failure of 1D60 (24 VDC Division II) will cause a loss of power to SRMs B and D. SRMs ‘A’ and ‘C’ are powered off of 1D50 (24 VDC Division I) and would still have power. (SD-878.1 page 28)
c. Correct.
d. Incorrect: the failure of 1D60 (24 VDC Division II) will cause a loss of power to SRMs B and D. SRMs ‘A’ and ‘C’ are powered off of 1D50 (24 VDC Division I) and would still have power. (SD-878.1 page 28)

QUESTION # 039

Given the following:

- A reactor startup is being conducted following refueling.
- Shorting links are installed.
- All Intermediate Range Monitor (IRM) range switches are selected to range 3 or 4.
- Source Range Monitors (SRMs) are still fully inserted into the core.
- The SRM UPSCALE setpoint has just been exceeded.

Which of the following describes the operational effects that would be expected to result from this condition?

a. An SRM UPSCALE rod block occurs and the operator cannot insert or withdraw control rods.

b. An SRM UPSCALE annunciator illuminates but a rod block does NOT occur.

c. An SRM UPSCALE trip occurs and a reactor scram results.

d. An SRM UPSCALE rod block occurs and the operator cannot withdraw control rods.

ANSWER:
d.

REFERENCE:
OI-878.1, Source Range Neutron Monitoring System, Revision 19
SD-856.1, Reactor Manual Control and Rod Position Information Systems, Revision 8
SD-878.1, Source Range Monitoring System, Revision 7

Proposed References to be provided to applicants during examination: None

MODIFIED FROM BANK (DAEC)
FUNDAMENTAL

K/A # 215004.K5.03: Knowledge of the operational implications of the following concepts as they apply to SOURCE RANGE MONITOR (SRM) SYSTEM: Changing detector position. CFR: 41.5

EXPLANATION:

a. Incorrect: a rod block does occur at $1x10^5$ CPS, however rod insertion is not blocked. The rod block circuitry is configured such that the relays associated with the rod block addressed in this question affect the signal path for rod withdrawal, however still leave the rod insertion path available. (SD-856 pages 14-17)
b. Incorrect: a rod block does occur as a result of the SRM upscale at $1x10^5$ CPS. Additionally, the required IRM range would be 7, not 3, to affect this block (range 3 would be affect a downscale condition). (SD-878 pages 24-25)

c. Incorrect: a scram would occur at $5x10^5$ CPS in the event that shorting links were not connected across the initial fuel loading relay contacts. It must be understood that the significance of the shorting links being installed is that the RPS input is thereby blocked, and not enabled. (SD-878 page 28)
d. Correct: If the SRM detectors are not retracted, the SRM UPSCALE rod block setpoint may be exceeded. This will cause a rod withdrawal block with its attendant alarms. (OI-878 page 6)

Original DAEC Bank Question:

A reactor startup is in progress. While performing the startup, the RO fails to retract the SRM detectors before the SRM UPSCALE setpoint is exceeded. All IRM range switches are on range 3 or 4.

What automatic actions occur, if any, due to this condition?

A. An SRM UPSCALE rod block occurs, and the operator cannot withdraw control rods until SRM counts are below the reset point.

B. An SRM UPSCALE rod block occurs, and the operator cannot withdraw or insert control rods until SRM counts are below the reset point.

C. An SRM UPSCALE annunciator illuminates and warns the operator that the SRM counts are high. No rod block occurs because all IRMs are on range 3 or above.

D. An SRM UPSCALE trip will cause a scram if one SRM from each RPS channel reaches its upscale trip setpoint.

Answer: A

Answer Explanation:

50007_878.1_lp rev 1

OI-878.1 Rev. 19, page 6, CAUTION statement
If the SRM detectors are not retracted, the SRM UPSCALE rod block setpoint (105 cps) may be exceeded. This will cause a rod withdrawal block with its attendant alarms. A rod withdrawal block will also occur if the SRM detectors are retracted to the point where the flux level is lower than the detector Retract Permissive setpoint (100 cps).

QUESTION # 040

The Reactor is operating at 1500 MWth. During a control rod withdrawal, a "C" level LPRM on the Four Rod Display fails DOWNSCALE resulting in a Rod Block Monitor reading of 66/125.

Which ONE of the following describes the effect of this failure on the Rod Block Monitor System?

This failure affects the input to:

a. BOTH Rod Block Monitors and WILL result in an RBM Rod Block.

b. ONLY ONE Rod Block Monitor and WILL result in an RBM Rod Block.

c. ONLY ONE Rod Block Monitor and WILL NOT result in an RBM Rod Block.

d. BOTH Rod Block Monitors and WILL NOT result in an RBM Rod Block.

ANSWER:
a.

REFERENCE:
SD 878.5 Rev 10, p. 10/15

Proposed References to be provided to applicants during examination: NONE

BANK (ID # 46992; Used on the 2007 DAEC ILT Exam)

HIGHER

K/A 215005 K 3.07 Knowledge of the effect that a loss or malfunction of the AVERAGE POWER RANGE MONITOR/LOCAL POWER RANGE MONITOR SYSTEM will have on following: Rod block monitor. (CFR: 41.7 / 45.4)
[K/A 215002 K 6.05 Knowledge of the effect that a loss or malfunction of the following will have on the ROD BLOCK MONITOR SYSTEM : LPRM detectors (CFR: 41.7 / 45.7)]

EXPLANATION:
a. Correct – C level LPRMs are inputs to both RBMs which will produce RBM Rod Blocks when indication lowers below 94/125.
b. Incorrect – would be true for a B or D level LPRM
c. Incorrect – would be true for a B or D level LPRM below 30% initial power.
d. Incorrect – would be true below 30% initial power.

QUESTION # 041

Given the following:

- Reactor power has just been raised to 62%.
- Both recirculation loops are in operation, with flow at 67% per loop.
- Total Core Flow is 33 Mlbm/hr (equally divided between both loops).

Based upon the above conditions, which of the following lists the current Average Power Range Monitor flow biased rod block setpoint?

a. 64%

b. 71%

c. 83%

d. 90%

ANSWER:
d.

REFERENCE:
SD-878.3, Power Range Monitoring System, Revision 11

Proposed References to be provided to applicants during examination: None

NEW
HIGHER

K/A # 215005.A1.04: Ability to predict and/or monitor changes in parameters associated with operating the AVERAGE POWER RANGE MONITOR/LOCAL POWER RANGE MONITOR SYSTEM controls including: SCRAM and rod block trip setpoints. CFR: 41.5

EXPLANATION:

a. Incorrect: miscalculated using a value for 'W' of 33 based on total core flow (vice using the correct percent recirculation loop flow value of 67) and the single loop equation constant value of 46 (vice the correct two loop constant of 53). (SD-878.3 page 24)
b. Incorrect: miscalculated using a value for 'W' of 33 based on total core flow (vice using the correct percent recirculation loop flow value of 67). (SD-878.3 page 24)
c. Incorrect: miscalculated using the single loop equation constant value of 46 (vice the correct two loop constant of 53). (SD-878.3 page 24)
d. Correct: APRM flow biased rod block occurs with two recirculation loops in operation at 0.55W + 53, where 'W' equals the percent of recirculation flow. The value '53' is a constant that applies when both recirculation loops are in operation. (SD-878.3 page 24)

QUESTION # 042

Given the following:

- The plant was operating at 80% power when a loss of coolant occurred.
- RCIC started automatically.
- MO-2404, TURBINE STEAM SUPPLY, and MO-2405, TURB STOP, both indicate intermediate.
- RCIC Pump discharge pressure is 130 psig.
- Ten (10) seconds ago, RCIC Pump discharge flow rose to a maximum of 100 gpm before lowering to a current value of 60 gpm.

Based upon the above conditions, MO-2510, MIN FLOW BYPASS, will be…

a. closed due to MO-2404 and MO-2405 not being fully open.

b. closed due to current RCIC Pump discharge flow.

c. closed due to low RCIC Pump discharge pressure.

d. open due to current RCIC Pump discharge flow.

ANSWER:
b.

REFERENCE:
ARP 1C04C, Revision 44
SD-150, Reactor Core Isolation Cooling System, Revision 8

Proposed References to be provided to applicants during examination: None.

NEW
HIGHER

K/A # 261000.K4.03: Knowledge of REACTOR CORE ISOLATION COOLING SYSTEM (RCIC) design feature(s) and/or interlocks which provide for the following: Prevents pump overheating.
CFR: 41.7

EXPLANATION:

a. Incorrect: MO-2510 is interlocked with MO-2404 and MO-2405; however the interlock is designed such that MO-2510 remains closed if MO-2404 and MO-2405 are both fully closed. (SD-150 page 20)
b. Correct: MO-2510 opens when pump discharge pressure exceeds 125 psig and pump discharge flow is less than 40 gpm; it will close when flow increases to 80 gpm. Since pump discharge pressure is given to be 130 psig and flow is given to have risen to 100 gpm before dropping to 60 gpm, the current state of MO-2510 would be closed. It is possible that MO-2510 would have been open prior to this point, however the current conditions would demand that the valve close. Since a two second time delay is associated with the valve

repositioning, an elapsed time of ten seconds is provided. (SD-150 page 20 and ARP 1C04C B-4)

c. Incorrect: MO-2510 opens when pump discharge pressure exceeds 125 psig and pump discharge flow is less than 40 gpm. (SD-150 page 20)

d. Incorrect: MO-2510 opens when pump discharge pressure exceeds 125 psig and pump discharge flow is less than 40 gpm; it will close when flow increases to 80 gpm. Since pump discharge pressure is given to be 130 psig and flow is given to have risen to 100 gpm before dropping to 60 gpm, the current state of MO-2510 would be closed. It is possible that MO-2510 would have been open prior to this point, however the current conditions would demand that the valve close. Since a two second time delay is associated with the valve repositioning, an elapsed time of ten seconds is provided. (SD-150 page 20 and ARP 1C04C B-4)

QUESTION # 043

Given the following:

- At time 10:00:00, a loss of coolant accident (LOCA) occurred. Standby Diesel Generators 1G-31 and 1G-21 failed to start.
- At time 10:03:00, 1C03A A-5, ADS "A/B" 2 MIN TIMER(S) INITIATED, LIT.
- At time 10:04:00, a loss of offsite power occurred.
- At time 10:06:00, Standby Diesel Generator 1G-31 was started manually.
- It is CURRENTLY 10:06:30. RPV level is 20 inches and has lowered continually since the start of the LOCA.

  Which of the following describes the response of the Automatic Depressurization System (ADS) when Core Spray Pump “A” is subsequently started?

a. ADS will initiate immediately.

b. ADS will initiate 30 seconds later.

c. ADS will initiate 90 seconds later.

d. ADS will not initiate automatically.

ANSWER:
a.

REFERENCE:
SD-183.1, Automatic Depressurization System and Low-Low Set System, Revision 7

Proposed References to be provided to applicants during examination: None

NEW

HIGHER

K/A # 218000.K5.01: Knowledge of the operational implications of the following concepts as they apply to AUTOMATIC DEPRESSURIZATION SYSTEM: ADS logic operation. CFR: 41.5

EXPLANATION:

a. Correct: ADS logic is DC powered and thus the ADS time delay relay continued counting down after the site blackout. The two minute countdown would have concluded at time 10:05:00. By 10:06:30, the only remaining input needed for ADS initiation is the start of either an RHR or CS pump (specifically their discharge pressure). Thus ADS will initiate immediately. (SD-183 pages 14 – 17)
b. Incorrect. If it is not understood that the ADS time delay relay countdown continued during the site blackout, then 30 seconds would appear to remain following the last logic input (RHR or CS pump start occurring). (SD-183 pages 14 – 17)

c. Incorrect: If it is not understood that the ADS time delay logic does not restart from time zero when AC power is restored, then it would appear that 90 seconds must still elapse before ADS initiation. (SD-183 pages 14 – 17)
d. Incorrect: If it is not understood that the ADS logic circuit has retained its contact states following the time delay relay timing out (which would have occurred 1.5 minutes before time 10:06:30), then it would appear that an automatic ADS initiation will no longer occur since the logic would no longer be satisfied. (SD-183 pages 14 – 17)

QUESTION # 044

Given the following:

- The plant was operating at 30% when a leak occurred in the drywell.
- Drywell pressure is currently 2.5 psig.
- Reactor Pressure Vessel level is currently 165 inches.
- Due to calibration errors, Primary Containment High Pressure Trip Channels A2 and B2 have both failed to trip.

Which of the following describes the automatic response of Primary Containment Isolation Group 2 valves to these conditions?

a. neither inboard nor outboard valves will close

b. only inboard valves will close

c. only outboard valves will close

d. both inboard and outboard valves will close

ANSWER:
b.

REFERENCE:
ARP 1C05B, Revision 98
SD-959.1, Primary Containment Isolation System, Revision 13

Proposed References to be provided to applicants during examination: None.

NEW
FUNDAMENTAL

K/A # 223002.K6.05: Knowledge of the effect that a loss or malfunction of the following will have on the PRIMARY CONTAINMENT ISOLATION SYSTEM/NUCLEAR STEAM SUPPLY SHUT-OFF: Containment instrumentation. CFR: 41.7

EXPLANATION:

a. Incorrect: the logic arrangement of the Group 2 circuitry is such that channels A1 and B1 provide input to the inboard valves, while channels A2 and B2 provide input to the outboard valves. The arrangement of the logic is also such that only a single pressure channel input (in combination with a low RPV water level input) is needed to actuate its respective inboard or outboard valve isolation. (SD-959.1 page 21)
b. Correct: either channel A1 or B1 tripping on high drywell pressure in conjunction with an RPV water level of less than 170 inches will cause a Group 2 inboard valve isolation. (SD-959.1 page 21)
c. Incorrect: the logic arrangement of the Group 2 circuitry is such that channels A1 and B1 provide input to the inboard valves, while channels A2 and B2 provide input to the outboard valves. (SD-959.1 page 21)

d. Incorrect: the logic arrangement of the Group 2 circuitry is such that channels A1 and B1 provide input to the inboard valves, while channels A2 and B2 provide input to the outboard valves. While it is true that only one pressure channel on either the inboard or outboard halves of the logic circuit need to trip to cause valve isolation, both of channels that tripped in the scenario presented would have been associated with only the inboard valves. (SD-959.1 page 21)

QUESTION # 45

The plant was operating at 95% power on a 101% flow control line when a Safety/Relief Valve received a high tailpipe temperature alarm. Per AOP 683, Abnormal Safety Relief Valve Operation a fast power reduction to <75% power has been completed. Prior to cycling the affected SRV, reactor power must be monitored closely because…

a. SRVs should not be cycled at greater than a 90% flow control line.
b. The APRMs will be reading low as a result of the power reduction.
c. The power reduction may have caused the MELLLA line to be exceeded.
d. Core power oscillations may occur as a result of entering the Buffer Region of the Power/Flow Map.

ANSWER:
c.

REFERENCE:
SD-183.1, Automatic Depressurization System and Low-Low Set System, Revision 7
ARP 1C03A (C-5), SRV/SV Tailpipe High Pressure or High Temperature, Revision 53
AOP 683, Abnormal Safety Relief Valve Operation, Revision 16

Proposed References to be provided to applicants during examination: NONE.

NEW
FUNDAMENTAL

239002 SRVs
Ability to predict and/or monitor changes in parameters associated with operating the RELIEF/SAFETY VALVES controls including: Reactor power. CFR: 41.5

EXPLANATION:

a. Incorrect: AOP 683 does not prescribe a flow control below other than < the MELLLA line.
b. Incorrect: The APRMs should be reading correctly.
c. Correct: AOP 683 contains a caution that the MELLLA line is expected to be exceeded, and a step requiring that power must be below the MELLLA line before a SRV is cycled.
d. At 75% power the reactor is well above the Buffer Region of the Power/Flow Map.

QUESTION # 046

Given the following plant conditions:

- The reactor is at 100% power.
- Both condensate pumps and reactor feed pumps are running with reactor water level control in Automatic Mode and 3 Element Control.
- Annunciator 1C05A D-1, "Reactor Vessel Hi/Lo Level Recorder Alarm," energizes.
- There are no other annunciators alarming.

What level do you expect the Level Recorder to indicate, and how can you restore level?

a. Above 195" or below 170". Put the A FEED REG VALVE MANUAL/AUTO TRANSFER to MAN and adjust BIAS SET to restore level.

b. Above 195" or below 186". Put the B FEED REG VALVE MANUAL/AUTO TRANSFER to MAN and adjust BIAS SET to restore level.

c. Above 195" or below 186". Put the MASTER FEED REG VALVE AUTO/MAN CONTROL to MAN and adjust MANUAL OUTPUT ADJUST KNOB to restore level.

d. Above 195" or below 170". Put the STARTUP FEED REG VALVE MANUAL/AUTO TRANSFER to MAN and adjust MANUAL OUTPUT CONTROL to restore level.

ANSWER
c.
REFERENCE
ARP 1C05A D-1, "Reactor Vessel Hi/Lo Level Recorder Alarm," Rev. 1, pp. 1-3
OI-644, "Condensate and Feedwater Systems," Rev. 27, p. 24
BANK – DAEC NRC Exam 1994
HIGHER
K/A: 259002A2.02: Ability to (a) predict the impacts of the following on the REACTOR WATER LEVEL CONTROL SYSTEM ; and (b) based on those predictions, use procedures to correct, control, or mitigate the consequences of those abnormal conditions or operations: Loss of any number of reactor feedwater flow inputs: 3..3; 3.4
EXPLANATION:

a. The level is too low; the master feed reg valve controller has to be placed in AUTO.
b. The level is correct; the master feed reg valve controller has to be placed in AUTO.
c. Correct
d. The master feed reg valve controller has to be placed in AUTO.

QUESTION 47

Given the following:

- The Standby Gas Treatment (SBGT) system is in standby readiness condition.
- A complete loss of instrument air occurs.

The COOL DOWN dampers will fail _____ and the DISCHARGE dampers will fail _____ on a loss of air.

A. Closed Open

B. Open Open

C. Open Closed

D. Closed Closed

Answer: A

K/A: 261000 A3.03 SGTS Ability to monitor automatic operations of the STANDBY GAS TREATMENT SYSTEM including: Valve operation. CFR: 41.7

Reference: SD-170, Rev. 13

Proposed References to be provided to applicants during examination: NONE

FUNDAMENTAL

MODIFIED BANK

EXPLANATION:

A: The Instrument Air System supplies control air for the suction and discharge dampers in the system. With a loss of air the dampers will fail in a position to provide an open flow path through the filter trains. The cool down air damper fails <u>closed</u> and the discharge dampers fail <u>open</u>.

ORIGINAL QUESTION

The SBGT system is in standby readiness condition. What effect will a complete loss of instrument air have on the SBGT Train INTAKE, FAN INLET, and DISCHARGE valves?

These are normally _____ valves and will fail _____ on a loss of air.

A. Closed Open

B. Open Closed

C. Open Open

D. Closed Closed

Answer: C

Reference: SD-170, Rev. 11

Answer Explanation:

Air operated ventilation dampers receive their primary air supply from the Instrument and Service Air compressors with a backup supply provided from the heating and ventilation air compressors1K-3 and 1K-4. On loss of control air, the dampers fail in such a manner as to line the SBGT System up for operation. These valves are normally in the OPEN position and OPEN upon an initiation to support operation of the system. During a complete loss of Instrument Air, the valve will fail OPEN.

QUESTION # 048

When synchronizing 1G31 "A" standby diesel generator (SBDG) to the 1A3 bus, the following conditions exist:

- The incoming voltage is slightly HIGHER than running voltage.
- The synchroscope is rotating slowly in the clockwise direction.

The "A" SBDG output breaker is then placed to CLOSE when the synchroscope is at the 3 o'clock position.

Which of the following describes the expected response and why?

The "A" SBDG output breaker will...

a. close and then trip open due to sensing an overspeed trip.

b. close and then trip open due to sensing an instantaneous overcurrent trip.

c. remain open due to a sync-check relay current differential.

d. remain open due to a sync-check relay incoming to running phase angle differential.

ANSWER:
d.

REFERENCES:
DAEC 2002 NRC Exam - RO
OI 324, STANDBY DIESEL GENERATOR SYSTEM, Rev 113

Proposed References to be provided to applicants during examination: NONE

BANK

HIGHER

K/A # 262001, AC Electrical Distribution, A4.05: Ability to manually operate and/or monitor in the control room: Voltage, current, power, and frequency on A.C. buses. CFR: 41.7

EXPLANATION:
a: Incorrect – An overspeed trip could occur IF the breaker closed in. The breaker will <u>not</u> close due to the sync-check relay action.
b: Incorrect – An instantaneous overcurrent condition due to the large phase difference IF the breaker closed. The breaker will <u>not</u> close due to the sync-check relay action.
c: Incorrect – The breaker remains open, however, but <u>not</u> due to excessive current differential.
d: Correct – The sync-check relay prevents closing in the SBDG output breaker if too large a phase difference is sensed. This protects the electrical plant from inadvertent paralleling of power sources that are not synchronized and the resulting damage that could occur.

ORIGINAL QUESTION

A trainee is synchronizing 1G 31 "A SBDG" to the 1A3 bus.
The following conditions are present during synchronizing the SBDG:

- The incoming voltage is slightly HIGHER than running voltage.
- The synchroscope is rotating slowly in the clockwise direction.

The trainee places the "A" SBDG output breaker to the close position when the synchroscope is at the 3 o'clock position.

Which of the following describes the expected breaker response?

The "A" SBDG output breaker will...

a. close and then trip open due to "A" SBDG overspeed trip.

b. close and then trip open due to an instantaneous overcurrent trip.

c. remain open due to the sync-check relay sensing excessive current differential.

d. remain open due to the sync-check relay sensing excessive incoming to running phase angle differential.

QUESTION # 049

The Uninterruptible AC System Transfer Switch 1Y22 will automatically transfer power from_____ to _____ on an undervoltage condition.

a. 1D45 Inverter/1Y4 Regulating Transformer
   Instrument AC Transformer 1Y2

b. 1D15 Inverter/1Y1A Regulating Transformer
   Instrument AC Transformer 1Y1

c. 1D45 Inverter/1Y4 Regulating Transformer
   Instrument AC Transformer 1Y1

d. 1D15 Inverter/1Y1A Regulating Transformer
   Instrument AC Transformer 1Y2

ANSWER:
a.

REFERENCES:
System Description 357, Uninterruptible AC Control Power, Rev. 7
Lesson Plan 50000_357, UNINTERRUPTIBLE AC CONTROL POWER SYSTEM, Rev. 1

Proposed References to be provided to applicants during examination: NONE

BANK

HIGH

K/A # 262002 UPS (AC/DC), A3.01: Transfer from preferred to alternate source, CFR 41.7

EXPLANATION:

a:	**Correct** - System Description 357, Figure 1, pg 6, and LP 50000_357 Rev. 1, pg 14/15.
b:	Incorrect - Relates to Instrument AC and <u>not</u> UAC.
c:	Incorrect - Refers to transformer 1Y1 vice 1Y2.
d:	Incorrect - Relates to Instrument AC and <u>not</u> UAC.

QUESTION # 050

Given the following:

- The plant was operating at 100% power.
- 4KV breaker control power has been lost to bus 1A2.
- AOP 302.1, LOSS OF 125 VDC POWER, has been entered.
- The Control Room staff are in the process of diagnosing the failure so that the appropriate procedure section can be used.

Based upon the conditions above, which of the following buses has lost power?

a. 1D11

b. 1D10

c. 1D21

d. 1D20

ANSWER:
c.

REFERENCE:
AOP-302.1, LOSS OF 125 VDC POWER, Revision 54
SD-375, Plant DC Power Supply System, Revision 8

Proposed References to be provided to applicants during examination: None.

NEW
FUNDAMENTAL

K/A # 263000.K1.01: Knowledge of the physical connections and/or cause effect relationships between D.C. ELECTRICAL DISTRIBUTION and the following: A.C. electrical distribution. CFR: 41.2 to 41.9

EXPLANATION:
a. Incorrect: a loss of 1D11 results in a loss of 1A1 breaker control, not 1A2. (AOP-302.1 page 2)
b. Incorrect: a loss of 125 VDC DIV I (1D10) results in a loss of 1A1 and 1A3 breaker control, not 1A2. (AOP-302.1 page 2)
c. Correct: a loss of 1D21 results in a loss of breaker 1A2 control. (AOP-302.1 page 28)
d. Incorrect: a loss of 125 VDC DIV II (1D20) results in a loss of both 1A2 and 1A4 breaker control. (AOP-302.1 page 43)

QUESTION # 051

Given the following:

- The plant was operating at 100%.
- A fault in the switchyard occurred causing the Startup and Standby Transformer circuit breakers "J", "K", and "M" to trip OPEN.
- Standby Diesel Generator (SBDG) 1G31 started automatically.
- SBDG 1G31 running speed rose to 840 RPM.
- SBDG 1G31 output voltage rose to 3600 volts.

Which of the following describes the status of Bus 1A3?

a. Becomes energized after SBDG 1G31 trips, restarts, and closes its output breaker automatically.

b. Remains de-energized due to the SBDG 1G31 output breaker not closing due to low output voltage.

c. Becomes energized after SBDG 1G31 closes its output breaker automatically.

d. Remains de-energized due to the SBDG 1G31 output breaker not closing due to engine speed being too low.

ANSWER:
b.

REFERENCE:
SD-304, Electrical Power Systems, Revision 19
SD-324, Standby Diesel Generator System, Revision 15

Proposed References to be provided to applicants during examination: None.

NEW
HIGHER

K/A # 261000.K1.07: Knowledge of the effect that a loss or malfunction of the EMERGENCY GENERATORS (DIESEL/JET) will have on following: A.C. electrical distribution. CFR: 41.7

EXPLANATION:

a. Incorrect: if generator output conditions are interpreted as being indicative of a fault, then generator fault protection is provided by a lockout protective feature, which acts to open the generator output breaker and also trips the engine. This feature requires manual action to reset however, and a subsequent engine restart/output breaker closure would not automatically occur in spite of the undervoltage condition still existing on bus 1A3. (SD-324 page 32).
b. Correct: the output breaker will not automatically close because output voltage is too low. Voltage must be at least 90% of rated voltage (90% of 4160V is 3744V). The voltage specified in this question is 3600V (approximately 87% of rated voltage). (SD-324 page 48).

c. Incorrect: the output breaker will not automatically close because output voltage is too low. Voltage must be at least 90% of rated voltage (90% of 4160V is 3744V). The voltage specified in this question is 3600V (approximately 87% of rated voltage). (SD-324 page 48).
d. Incorrect: engine running speed is high enough to satisfy the required value (90% of rated speed) for output breaker closure. The rated speed of the engine is 900 RPM and 90% of this value would be 810 RPM. The running speed given in this question is 840 RPM which is approximately 93% of the rated speed. The output breaker will not automatically close because output voltage is too low. Voltage must be at least 90% of rated voltage (90% of 4160V is 3744V). The voltage specified in this question is 3600V (approximately 87% of rated voltage). (SD-324 page 48).

QUESTION # 052

Given the following:

- The plant is operating at 100% power.
- 1C07B (B-10), INSTRUMENT AIR DRYERS 1T-265A/B LO DISCH PRESSURE, is LIT.
- Instrument air pressure is lowering rapidly and cannot be controlled.

Which of the following describes the expected response of Isophase Bus cooling General Service Water supply valves CV4779A and CV4779B and what, if any, actions will subsequently be required?

a. CV4779A and CV4779B will remain open and therefore no power reduction will be required.

b. CV4779A and CV4779B will fail closed and a normal power reduction will be required.

c. CV4779A and CV4779B will fail closed and a fast power reduction will be required.

d. CV4779A and CV4779B will fail closed and, as a direct result, a reactor scram will be required.

ANSWER:
c.

REFERENCE:
AOP-518, Failure of Instrument and Service Air, Revision 34
ARP 1C07B, Revision 86
ARP 1C08C, Revision 57
SD-411, General Service Water System, Revision 12

Proposed References to be provided to applicants during examination: None

NEW
HIGHER

K/A # 300000.K3.02: Knowledge of the effect that a loss or malfunction of the INSTRUMENT AIR SYSTEM will have on the following: Systems having pneumatic valves and controls. CFR: 41.7

EXPLANATION:

a. Incorrect: Isophase Bus cooling is provided by GSW via valves CV4779A and CV4779B. These valves are controlled by instrument air and fail closed if it is lost. This loss of GSW cooling would result in rising Isophase Bus temperatures (SD-411 pages 9-12, AOP-518 pages 3-4). If Isophase Bus air temperatures rise to 175°F due to CV4779A and CV4779B failing closed, generator load reduction to < 11000 amps is required using the IPOI 4 Fast Power Reduction section (AOP-518 pages 3-4).
b. Incorrect: If Isophase Bus air temperatures rise to 175°F due to CV4779A and CV4779B failing closed, generator load reduction to < 11000 amps is required using the IPOI 4 Fast Power Reduction section (AOP-518 pages 3-4).

c. Correct.
d. Incorrect: If Isophase Bus air temperatures rise to 175°F due to CV4779A and CV4779B failing closed, generator load reduction to < 11000 amps is required using the IPOI 4 Fast Power Reduction section (AOP-518 pages 3-4). It is important to note that while certain plant conditions in AOP-518 will directly warrant a reactor scram, Isophase Bus high temperature is addressed using a fast power reduction instead.

QUESTION # 053

Given the following:

- The plant was operating at 100% power.
- Reactor Building Closed Cooling Water (RBCCW) Pumps 1P-81A and 1P-81C were running.
- The supply breaker for 480 VAC Essential MCC 1B35 just tripped due to an electrical fault.

Based on these conditions, when RBCCW pressure lowers to…

a. 38 psig RBCCW pumps 1P-81A and 1P-81B will be running.

b. 38 psig RBCCW pumps 1P-81B and 1P-81C will be running.

c. 35 psig RBCCW pumps 1P-81A and 1P-81B will be running.

d. 35 psig RBCCW pumps 1P-81B and 1P-81C will be running.

.
ANSWER:
d.

REFERENCE:
ARP 1C06B, Revision 56
SD-414, Reactor Building Closed Cooling Water System, Revision 9

Proposed References to be provided to applicants during examination: None

NEW
FUNDAMENTAL

K/A# 400000.K4.01: Knowledge of CCWS design feature(s) and or interlocks which provide for the following: Automatic start of standby pump. CFR: 41.7

EXPLANATION:

a. Incorrect: the low pressure auto-start of the standby pump occurs at 35 psig, while 38 psig corresponds to the low RBCCW discharge header pressure alarm setpoint (SD-414 page 7 and ARP 1C06B D-3). Also, the electrical power supply for RBCCW Pump 1P-81A is 480 VAC Essential MCC 1B35, whereas RBCCW Pumps 1P-81B and 1P-81C are supplied from 480 VAC Essential MCC 1B43 (SD-414 page 7).
b. Incorrect: the low pressure auto-start of the standby pump occurs at 35 psig, while 38 psig corresponds to the low RBCCW discharge header pressure alarm setpoint (SD-414 page 7 and ARP 1C06B D-3).
c. Incorrect: the electrical power supply for RBCCW Pump 1P-81A is 480 VAC Essential MCC 1B35, whereas RBCCW Pumps 1P-81B and 1P-81C are supplied from 480 VAC Essential MCC 1B43 (SD-414 page 7).
d. Correct.

QUESTION # 054

Given the following:

- The plant is operating at 80% power.
- Reactor Protection System Buses are being supplied by their normal sources.
- An electrical fault results in a loss of power to Essential 480 VAC Motor Control Center 1B42.
- Subsequently, Reactor Vessel High Pressure Trip Channel A1 experiences a spurious trip.

Based on the conditions above, what will be the status of scram pilot valves SV-1855 and SV-1856?

a. Both energized.

b. Only SV-1855 valves will be de-energized.

c. Only SV-1856 valves will be de-energized.

d. Both de-energized

ANSWER:
d.

REFERENCE:
ARP 1C05B, Revision 98
SD-255, CRD Mechanisms and Hydraulic System, Revision 9
SD-358, Reactor Protection System, Revision 9

Proposed References to be provided to applicants during examination: None

NEW
HIGHER

K/A# 201001.K2.02: Knowledge of electrical power supplies to the following: Scram valve solenoids. CFR: 41.7

EXPLANATION:

a. Incorrect: the loss of MCC 1B42 resulted in a loss of RPS MG Set 'B'. This would cause a loss of power to RPS train 'B', which results in a half scram condition. Scram pilot valve solenoids SV-1855 will lose power (SD-255 pages 24-25, and SD-358 pages 10-29). Also, the trip of a single Reactor Vessel High Pressure Trip Channel results in a half scram (ARP 1C05B C-4). Since this occurred on the A1 channel, this would result in a RPS train 'A' half scram and the SV-1856 scram pilot valves would de-energize (SD-255 pages 24-25). Based on this combination of events, both the SV-1856 and SV-1855 scram pilot valves have been de-energized, resulting in a full scram condition.
b. Incorrect: the trip of a single Reactor Vessel High Pressure Trip Channel results in a half scram (ARP 1C05B C-4). Since this occurred on the A1 channel, this would result in a RPS

train ‘A’ half scram and the SV-1856 scram pilot valves would de-energize (SD-255 pages 24-25).

c. Incorrect: the loss of MCC 1B42 resulted in a loss of RPS MG Set ‘B’. This would cause a loss of power to RPS train ‘B’, which results in a half scram condition. Scram pilot valve solenoids SV-1855 will lose power (SD-255 pages 24-25, and SD-358 pages 10-29).

d. Correct: the loss of MCC 1B42 resulted in a loss of RPS MG Set ‘B’. This would cause a loss of power to RPS train ‘B’, which results in a half scram condition. Scram pilot valve solenoids SV-1855 will lose power (SD-255 pages 24-25, and SD-358 pages 10-29). Also, the trip of a single Reactor Vessel High Pressure Trip Channel results in a half scram (ARP 1C05B C-4). Since this occurred on the A1 channel, this would result in a RPS train ‘A’ half scram and the SV-1856 scram pilot valves would de-energize (SD-255 pages 24-25). Based on this combination of events, both the SV-1856 and SV-1855 scram pilot valves have been de-energized, resulting in a full scram condition.

QUESTION # 055

The recirculation loop speed mismatch limits of ITS 3.4.1, Recirculation Loops Operating, are based upon preventing which of the following during a subsequent Loss of Coolant Accident scenario?

a. Reflood phase core water level adverse effects.

b. Assumed blowdown flow being invalidated.

c. LPCI Loop Select Logic injecting to the wrong loop.

d. Excessive flow coastdown characteristics.

ANSWER:
c.

REFERENCE:
DAEC ITS Bases 3.4.1
DAEC ITS Bases 3.4.2

Proposed References to be provided to applicants during examination: None

NEW
FUNDAMENTAL

K/A: Generic K/A# 2.2.25: Knowledge of the bases in Technical Specifications for limiting conditions for operations and safety limits. CFR: 41.5 / 41.7. Associated system: Recirculation (202001)

EXPLANATION:

a. Incorrect: this adverse effect is associated with jet pump operability. The ITS 3.4.2 Basis states the following: "The capability of reflooding the core to two-thirds core height is dependent upon the structural integrity of the jet pumps. If the structural system, including the beam holding a jet pump in place, fails, jet pump displacement and performance degradation could occur, resulting in an increased flow area through the jet pump and a lower core flooding elevation. This could **adversely affect the water level in the core during the reflood phase** of a LOCA as well as the assumed blowdown flow during a LOCA."
b. Incorrect: this adverse effect is associated with jet pump operability. The ITS 3.4.2 Basis states the following: "The capability of reflooding the core to two-thirds core height is dependent upon the structural integrity of the jet pumps. If the structural system, including the beam holding a jet pump in place, fails, jet pump displacement and performance degradation could occur, resulting in an increased flow area through the jet pump and a lower core flooding elevation. This could adversely affect the water level in the core during the reflood phase of a LOCA **as well as the assumed blowdown flow during a LOCA.**"
c. Correct: the basis of ITS 3.4.1 states the following: "Since recirculation loop flow is controlled by varying recirculation pump speed, a limit on the speed mismatch between operating recirculation pumps has been imposed. **For some limited low probability accidents (e.g., intermediate break size LOCAs) with the recirculation loop operating**

with large speed differences, it is possible for the LPCI Loop Select Logic to select the wrong loop for injection. For these limited conditions the Core Spray itself is adequate to prevent fuel temperatures from exceeding allowable limits. However, to limit the probability even further, operating procedures have been put into place limiting the allowable mismatch in speed between the recirculation pumps. Analyses indicate that above 69.4% RTP the Loop Select Logic could be expected to function at a speed differential up to 14% of their average speed. Below 69.4% RTP the Loop Select Logic would be expected to function at a speed differential up to 20% of their average speed. **The recirculation loop speed mismatch limits imposed to prevent the LPCI Loop Select Logic from selecting the wrong loop for injection bound the recirculation flow mismatch limits for LOCA analyses."**

d. Incorrect: the ITS 3.4.1 Basis states the following: "The recirculation loop speed mismatch limits imposed to prevent the LPCI Loop Select Logic from selecting the wrong loop for injection bound the recirculation flow mismatch limits for LOCA analyses. If the reactor is operating on one recirculation pump, the Loop Select Logic trips that pump before making the loop selection. **The recirculation system is also assumed to have sufficient flow coastdown characteristics to maintain fuel thermal margins** during abnormal operational transients (Ref. 2), which are analyzed in Chapter 15 of the UFSAR." This answer is incorrect because of the key wording 'excessive flow coastdown'. The concern per the basis would be insufficient flow coastdown, not excessive flow coastdown.

QUESTION # 056

Given the following:

- The plant was operating at 90% power.
- Cleanup Recirculation Pump 1P-205A was running.
- Subsequently, Reactor Building Closed Cooling Water (RBCCW) flow was lost to the Reactor Water Cleanup (RWCU) system.
- 1C04B (C-9), RWCU FILTER/DEMIN INLET WATER HI TEMP, is now LIT.
- RWCU Filter/Demin Inlet temperature is 135°F and rising.
- NO operator action has yet been taken.

Which of the following describes the CURRENT status of the RWCU system?

a. MO 2700, INBD CLEANUP SUCT ISOL, is OPEN
   MO 2701, OUTBD CLEANUP SUCT ISOL, is CLOSED

b. MO 2700, INBD CLEANUP SUCT ISOL, is CLOSED
   MO 2701, OUTBD CLEANUP SUCT ISOL, is CLOSED

c. MO 2700, INBD CLEANUP SUCT ISOL, is OPEN
   MO 2701, OUTBD CLEANUP SUCT ISOL, is OPEN

d. MO 2700, INBD CLEANUP SUCT ISOL, is CLOSED
   MO 2701, OUTBD CLEANUP SUCT ISOL, is OPEN

ANSWER:
c.

REFERENCE:
ARP 1C04B
SD-261

Proposed References to be provided to applicants during examination: None

NEW
FUNDAMENTAL

K/A# 204000.K4.03: Knowledge of REACTOR WATER CLEANUP SYSTEM design feature(s) and/or interlocks which provide for the following: Over temperature protection for system components. CFR: 41.7

EXPLANATION:

a. Incorrect: MO 2701 closes at a Filter/demineralizer inlet High Temperature at 140ºF; this feature affects outboard isolation valves, and not inboard isolation valves (SD-261 page 11 and ARP 1C04B D-9). This temperature would also correspond to the receipt of 1C04B (D-9), RWCU FILTER/DEMIN INLET WATER **HI-HI** TEMP (ARP 1C04B C-9).
b. Incorrect: MO 2701 closes at a Filter/demineralizer inlet High Temperature at 140ºF; this feature affects outboard isolation valves, and not inboard isolation valves (MO 2700) (SD-

261 page 11 and ARP 1C04B D-9). This temperature would also correspond to the receipt of 1C04B (D-9), RWCU FILTER/DEMIN INLET WATER HI-HI TEMP (ARP 1C04B C-9).

c. Correct: MO 2701 closes at a Filter/demineralizer inlet High Temperature at 140ºF (SD-261 page 11 and ARP 1C04B D-9).

d. Incorrect: MO 2701 closes at a Filter/demineralizer inlet High Temperature at 140ºF; this feature affects outboard isolation valves, and not inboard isolation valves (MO 2700) (SD-261 page 11 and ARP 1C04B D-9). This temperature would also correspond to the receipt of 1C04B (D-9), RWCU FILTER/DEMIN INLET WATER HI-HI TEMP (ARP 1C04B C-9).

QUESTION # 57

A reactor shutdown is in progress with the unit at 50% power when a RMCS malfunction forces you to use “EMERG IN” for rod insertion.

Which of the following would prevent use of “EMERG IN”.

a. A bypassed Rod Worth Minimizer.
b. ROD OUT BLOCK annunciator 1C05B(A-6) in alarm.
c. RBM UPSCALE OR INOP annunciator 1C05B(B-6) in alarm.
d. No position indication for the currently selected control rod due to a failed reed switch.

ANSWER:
d.

REFERENCE:
DAEC Exam Bank

Proposed References to be provided to applicants during examination: NONE.

BANK
FUNDAMENTAL

214000 RPIS
Knowledge of the effect that a loss or malfunction of the ROD POSITION INFORMATION SYSTEM will have on the following: RMCS

EXPLANATION:

a. Incorrect: A bypassed Rod Worth Minimizer will not prevent use of “EMERG IN”.
b. Incorrect: A ROD OUT BLOCK will not prevent use of “EMERG IN”.
c. Incorrect: A RBM UPSCALE OR INOP will not prevent use of “EMERG IN”.
d. Correct: A reed switch failure will result in all control rods receiving an insert and withdrawal block. This block is generated from the RWM and is not bypassed by the EMERGENCY IN switch operation. The RWM must be BYPASSED for rod insertion to continue.

QUESTION # 058

The plant is operating at 100% power under the following conditions:

- Repairs on "A" Rod Block Monitor (RBM) were completed
- RBM "A" was removed from BYPASS to accomplish Post Maintenance Testing
- The ROD OUT PERMISSIVE light extinguished and illuminated again two seconds later
- Annunciator 1C05B (A-6), ROD OUT BLOCK did NOT alarm

Which statement below correctly describes the response to the given conditions?

This response was…

a. NOT normal because the “A” RBM should NOT null until a new control rod is selected

b. normal because "A" RBM generated a rod out inhibit during the null sequence.

c. NOT normal only because the annunciator should have alarmed when the ROD OUT PERMISSIVE light was extinguished.

d. normal because the rod out blocks are bypassed for two seconds to allow the reference APRM gain adjustment during the null sequence.

ANSWER:
b.

REFERENCES:
2011 DAEC NRC Exam
SD-878.5, Rev. 10, Page 16

Proposed References to be provided to applicants during examination: None

BANK

HIGHER

K/A # 215002 RBM A4.03: Ability to manually operate and/or monitor in the control room: Trip bypasses: BWR-3,4,5. CFR: 41.7

EXPLANATION:
a. Incorrect -.Taking the RBM out of BYPASS will initiates a null sequence.
b. **Correct** - Taking a RBM out of BYPASS initiates a null sequence. RBM trip functions are bypassed during the nulling sequence so no alarm is generated.
c. Incorrect - The RBM trip functions are bypassed during the nulling sequence so no alarm is generated.
d. Incorrect - There is no rod block bypass, the RBM trip functions are bypassed during the nulling sequence so no alarm is generated.

ORIGINAL QUESTION
The plant is operating in MODE 1 at 100% power with the following conditions:

Repairs on "A" Rod Block Monitor have just been completed

• RBM A is removed from BYPASS to accomplish Post Maintenance Testing
• The ROD OUT PERMISSIVE light extinguished and then illuminated again within two seconds
• Annunciator 1C05B (A-6), ROD OUT BLOCK did NOT alarm

Which one of the following statements describes the system response to the above?
This condition is ...

A. NOT normal because the “A” RBM should not null until a new control rod is selected

B. normal because "A" RBM generated a rod out inhibit during the null sequence.

C. NOT normal only because the annunciator should have alarmed when the ROD OUT PERMISSIVE light was extinguished.

D. normal because the rod out blocks are bypassed for two seconds to allow the reference APRM gain adjustment during the null sequence.

QUESTION # 059

Which of the following instruments accuracy would be adversely affected if they were NOT TEMPERATURE compensated AND calibrated HOT?

a. Wide Range Yarway Level Transmitters

b. Narrow Range GEMAC Level transmitters

c. Wide Range GEMAC Floodup Instruments

d. GOULD Fuel Zone Instruments

ANSWER:
a.

REFERENCE:

Proposed References to be provided to applicants during examination: None

MODIFIED BANK

FUNDAMENTAL

K/A # 216000 Nuclear Boiler Inst. K6.03: Knowledge of the effect that a loss or malfunction of the following will have on the NUCLEAR BOILER INSTRUMENTATION: Temperature compensation. CFR: 41.7

EXPLANATION:
a. Correct.
b. Incorrect. Narrow Range GEMAC level transmitters are NOT compensated but are calibrated HOT.
c. Incorrect. Wide Range GEMAC Floodup Instruments are NOT compensated and are also calibrated COLD.
d. Incorrect. Electronic pressure compensation and COLD calibration are used for the GOULD Fuel Zone Instruments.

ORIGINAL QUESTION
From 2001 NRC Exam - GEMAC level control:

The Narrow Range GEMAC level transmitters (LT-4559, 4560, and 4561) are used in the Reactor Water Level Control system.

1. Are these transmitters calibrated HOT or COLD?

AND

2. What type of compensation, if any, do they use?

A. HOT	None
B. HOT	**Temperature compensation**
C. COLD	None
D. COLD	Electronic pressure compensation

Answer: A

Answer Explanation:
Distractor 1: RPV level control Gemacs are not temperature compensated. **This describes Wide Range Yarways.**
Distractor 2: RPV level control Gemacs are not calibrated cold. This describes the Floodup Gemacs.
Distractor 3: RPV level control Gemacs are not calibrated cold. and are not pressure compensated. This describes Fuel zone indicators.

REFERENCE: SD-880 rev 13 page 27
50007_88-0_Part 1_lp page 11-16
Copied from ILT NRC 2001 Examination DAEC

QUESTION # 060

Given the following:

- The plant was operating at 100%.
- The running Fuel Pool Cooling Pump, 1P-214A, tripped due to a seized bearing.
- While subsequently attempting to start Fuel Pool Cooling Pump 1P-214B using hand switch HS-3410B in accordance with OI-435, Fuel Pool Cooling System, an electrical fault in the control circuit prevented pump start.
- Fuel Pool Temperature was initially 30 degrees greater than the minimum limit for existing plant conditions.
- Fuel Pool heatup rate has been calculated to be 2.1°F/hr.

How long will Fuel Pool Temperature take to rise to the maximum limit?

a. 15.2 hours

b. 24.8 hours

c. 28.6 hours

d. 38.1 hours

ANSWER:
d.

REFERENCE:
AOP-435, Loss of Fuel Pool Cooling / Inventory, Revision 10
ARP 1C04B, Revision 79
OI-435, Fuel Pool Cooling System, Revision 65
SD-435, Fuel Pool and Fuel Pool Cooling and Cleanup System, Revision 8

Proposed References to be provided to applicants during examination: None

NEW
HIGHER

K/A# 233000.A1.03: Ability to predict and/or monitor changes in parameters associated with operating the FUEL POOL COOLING AND CLEAN-UP controls including: Pool temperature.
CFR: 41.5

EXPLANATION:

a. Incorrect: this answer incorrectly assumes that the minimum operating limit is 68°F (this limit applies when fuel pool gates are removed; the fact that these gates are installed is provided indirectly by the plant condition of 100% in the stem) (SD-435 page 10). It also incorrectly assumes that the maximum operating limit is 130°F (which is the heat exchanger outlet temperature limit to prevent resin damage) (SD-435 page 10). These assumptions yield the following calculation: [130°F – (68°F + 30°F)] / 2.1°F/hour = 15.2 hours.

b. Incorrect: this answer incorrectly assumes that the minimum operating limit is 68°F (this limit applies when fuel pool gates are removed; the fact that these gates are installed is provided indirectly by the plant condition of 100% in the stem) (SD-435 page 10). This assumption yields the following calculation: [150°F – (68°F + 30°F)] / 2.1°F/hour = 24.8 hours.
c. Incorrect: this answer incorrectly assumes that the maximum operating limit is 130°F (the heat exchanger outlet temperature limit to prevent resin damage) (SD-435 page 10). This assumption yields the following calculation: [130°F – (40°F + 30°F)] / 2.1°F/hour = 28.6 hours.
d. Correct: the minimum fuel pool operating limit is 40°F when fuel pool gates are installed (SD-435 page 10). The maximum fuel pool operating limit is 150°F (SD-435 page 10). These assumptions yield the following calculation: [150°F – (40°F + 30°F)] / 2.1°F/hour = 38.1 hours.

QUESTION # 061

Given the following:

- Refueling operations are in progress.
- The refueling platform operator is in the process of removing a fuel assembly from the reactor.
- The grapple and fuel assembly have just been raised
- Both the GRAPPLE ENGAGED and GRAPPLE NORMAL UP lights are LIT.
- Suddenly a leak develops in the air supply to the grapple.

When the air supply pressure to the grapple lowers to 90 psig, the status of the GRAPPLE ENGAGED light will _____ and the position of the grapple will be _____.

a. NOT lit
   open

b. NOT lit
   closed

c. LIT
   open

d. LIT
   closed

ANSWER:
d.

REFERENCE:
SD-281, Fuel Handling System, Revision 7

Proposed References to be provided to applicants during examination: None
NEW
FUNDAMENTAL

K/A# 234000.K1.01: Knowledge of the physical connections and/or cause effect relationships between FUEL HANDLING EQUIPMENT and the following: Fuel. CFR: 41.2 to 41.9

EXPLANATION:

a. Incorrect: the GRAPPLE ENGAGED light will illuminate based upon the grapple state as sensed by limit switches. If it is not lit, the hooks of the fuel grapple are not fully closed. When the grapple senses less than 100 psi in its air supply line, the grapple automatically closes (SD-281 pages 12-13). Thus the grapple has not dropped the fuel assembly. The light will continue to indicate the true state of the grapple, which remains engaged.
b. Incorrect: the GRAPPLE ENGAGED light will illuminate based upon the grapple state as sensed by limit switches. If it is not lit, the hooks of the fuel grapple are not fully closed (SD-281 pages 12-13). The light will continue to indicate the true state of the grapple, which remains engaged.

c. Incorrect: the GRAPPLE ENGAGED light will illuminate based upon the grapple state as sensed by limit switches. If it is not lit, the hooks of the fuel grapple are not fully closed. When the grapple senses less than 100 psi in its air supply line, the grapple automatically closes (SD-281 pages 12-13). Thus the grapple has not dropped the fuel assembly. The light will continue to indicate the true state of the grapple, which remains engaged.
d. Correct.

Question 62

The plant is operating in MODE 1 at 100% power with the following conditions:

- Annunciator A-2 REACTOR BLDG SOUTH EAST AREA FLOOR DRAIN LEVEL HIGH alarms at panel 1C147, RB Floor Drain System Control
- Annunciator B-4 AREA WATER LEVELS ABOVE MAX NORMAL alarms at panel 1C14A, EOP Annunciators
- An operator reports from 1C21 that SE Corner Room (SECR) level is slightly greater than 2 inches and rising very slowly.
- There are SECR mezzanine reports of water on the floor and they are trying to locate the leak.

Which of the following procedures:

(1) Shall be reported to the CRS for possible entry, AND
(2) What are the required actions?

A. (1) EOP 2, PRIMARY CONTAINMENT CONTROL
(2) Scram the reactor and emergency depressurize.

B. (1) EOP 3, SECONDARY CONTAINMENT CONTROL
(2) Have the Plant Chemist sample the water prior to draining it to the Reactor Building Floor Drain Sump.

C. (1) EOP 2, PRIMARY CONTAINMENT CONTROL
(2) Have the Radwaste Operator pump down the Reactor Building Floor Drain Sump.

D. (1) EOP 3, SECONDARY CONTAINMENT CONTROL
(2) Have the Radwaste Operator open the affected valve to drain the area, and operate sump pumps as necessary.

ANSWER: D

K/A 268000 G2.4.21: Knowledge of the parameters and logic used to assess the status of safety functions, such as reactivity control, core cooling and heat removal, reactor coolant system integrity, containment conditions, radioactivity release control, etc.

HIGHER

BANK – 2011 DAEC NRC Exam

REFERENCE: EOP-3, SECONDARY CONTAINMENT CONTROL

Proposed References to be provided to applicants during examination: NONE

Explanation:
A. Incorrect – The greater than max normal water level is an entry into EOP 3, not EOP 2.

B. Incorrect - There is no requirement to sample the water and time should not be spent in the EOP sampling the discharge of water from this area is required.

C. Incorrect – The greater than max normal water level is an entry into EOP 3, not EOP 2.

D. Correct - SE Corner Room level is slightly greater than 2 inches is above the Max Normal Operating Limit for the SE corner Room which requires an entry into EOP-3. The EOP requires operating available sump pumps to restore and maintain water level below the Max Normal Operating Limit

ORIGINAL QUESTION:

The plant is operating in MODE 1 at 100% power with the following conditions:
– Annunciator A-2 REACTOR BLDG SOUTH EAST AREA FLOOR DRAIN LEVEL HIGH alarms at panel 1C147, RB Floor Drain System Control
– Annunciator B-4 AREA WATER LEVELS ABOVE MAX NORMAL alarms at panel 1C14A, EOP Annunciators
– An operator reports from 1C21 that SE Corner Room level is slightly greater than 2 inches and rising very slowly.
– SANSOE reports from the SECR mezzanine that there is water on the floor and he will try to locate the leak

Which one of the following procedures:

(1) Shall be reported to the CRS as a possible entry, and
(2) What are the required actions

A. (1) EOP 1, RPV CONTROL
(2) Scram the reactor and control level, pressure, reactor power.
B. (1) EOP 3, SECONDARY CONTAINMENT CONTROL
(2) Contact the Plant Chemist and have him sample the water prior to draining it to the Reactor Building Floor Drain Sump.
C. (1) EOP 1, RPV CONTROL
(2) Contact the Radwaste Operator and have him pump down the Reactor Building Floor Drain Sump.
D. (1) EOP 3, SECONDARY CONTAINMENT CONTROL
(2) Have the Radwaste Operator open the affected valve to drain the area, and operate sump pumps as necessary.
Proposed Answer: D

QUESTION # 063

The plant has been scrammed with indications of fuel damage.

The following annunciators are in alarm:

- 1C05B (C-2) MAIN STEAM LINE HI HI RAD / INOP TRIP
- 1C05B (D-2) MAIN STEAM LINE HI RAD
- 1C03A (A-4) OFFGAS VENT PIPE RM-4116A/B HI-HI RAD

Based on the alarms and conditions above, which of the following isolations are NOT expected to occur AUTOMATICALLY?

a. Recirc Sample Control Valves

b. Group III

c. Main Steam Line Drains

d. Main Steam Line Isolation Valves

ANSWER:
d.

REFERENCE:
AOP 672, OFFGAS RADIATION/REACTOR COOLANT HIGH ACTIVITY

Proposed References to be provided to applicants during examination: NONE

MODIFIED BANK (2009 DAEC NRC Exam)

FUNDAMENTAL

K/A # 271000 Offgas, A3.05: Ability to monitor automatic operations of the OFFGAS SYSTEM including: System indicating lights and alarms. CFR: 41.7

EXPLANATION:
a. Incorrect: Recirc Sample Control Valves will automatically isolate.
b. Incorrect. A Group III isolation is expected.
c. Incorrect. Main Steam Line Drains will automatically isolate.
d. Correct. The MSIVs must be manually isolated.

ORIGINAL QUESTION

The plant was operating at full power when a loss of feedwater heating occurred.
The plant has been scrammed. Indications of fuel damage exist.
The following annunciators are in alarm:

1C05B (C-2) MAIN STEAM LINE HI HI RAD / INOP TRIP
1C05B (D-2) MAIN STEAM LINE HI RAD
1C03A (A-4) OFFGAS VENT PIPE RM-4116A/B HI-HI RAD

The CRS has entered AOP 672.2 “Offgas Radiation/Reactor Coolant Activity High”.
Which one of following describes actions that will automatically occur and other required manual actions?

a.
All MSIVs, the Main Steam Line Drain Valves and the Recirc Sample CVs will automatically close.
SBGT will automatically start.

b.
The Main Steam Line Drain Valves and the Recirc Sample CVs will automatically close.
The MSIVs will NOT automatically close and must be manually closed.
SBGT will NOT automatically start.

c.
The Main Steam Line Drain Valves and the Recirc Sample CVs will automatically close.
SBGT will automatically start.
The MSIVs will NOT automatically close and must be manually closed.

d.
The Main Steam Line Drain Valves will automatically close.
SBGT will NOT automatically start.
The MSIVs will NOT automatically close and must be manually closed.
The Recirc Sample CVs will NOT automatically close.

QUESTION # 064

The plant is operating at power with all LCOs met when annunciator 1C23A (F-3) REACTOR BLDG VENT SHAFT RAD MONITOR RIM-7606A HI/TROUBLE alarms.

Which one of the following describes:
(1) a potential cause of the alarm AND
(2) a resulting automatic action that occurs due to the alarm, if any?

A. (1) Loss of its Instrument AC power supply.
(2) NO actions.

B. (1) Loss of its Instrument AC power supply.
(2) Inboard Group 3 isolation.

C. (1) Loss of its 125 VDC power supply.
(2) NO actions.

D. (1) Loss of its 125 VDC power supply.
(2) Inboard Group 3 isolation.

ANSWER:
B.

REFERENCES:
AOP 317, LOSS OF 120 VAC INSTRUMENT CONTROL POWER PANEL 1Y11 rev 96, p. 12
SD 879.1, PROCESS RADIATION MONITORING SYSTEM, rev 9, pages 50-51
ARP 1C23A rev 18 (F-3) Sections 1 and 3, page 61
50007_879-1_lp rev 0, pages 36, 37 & 58

Proposed References to be provided to applicants during examination: NONE

BANK – 2009 DAEC Audit Exam

HIGHER

K/A # 272000, Radiation Monitoring, K2.05: Knowledge of the operational implications of the following concepts as they apply to RADIATION MONITORING SYSTEM: Reactor building ventilation monitors: Plant-Specific. CFR: 41.7

EXPLANATION:
A. Incorrect: An Inboard Group 3 isolation occurs.
B. Correct. Loss of 120VAC Instrument power causes the alarm <u>and</u> an Inboard Group 3 isolation occurs.
C. Incorrect. Power is supplied via 120 VAC.
D. Incorrect. Power is supplied via 120 VAC <u>and</u> an Inboard Group 3 isolation occurs

QUESTION # 065

Given the following:

- The plant is operating at 100% power.
- A radiological event resulted in an automatic Control Building Isolation.
- Five (5) minutes later, Battery Exhaust Fans 1V-EF-30A AND 1V-EF-30B are observed to remain running.

Based on the above conditions, the Control Building Isolation will…

a. be able to maintain the required positive Control Room pressure.

b. be able to maintain the required negative Control Room pressure.

c. NOT be able to maintain the required positive Control Room pressure.

d. NOT be able to maintain the required negative Battery Room pressure.

ANSWER:
c.

REFERENCE:
ARP1C26A, Revision 50
ARP 1C26B, Revision 50
ARP 1C07A, Revision 51
OI-730, Control Building HVAC System, Revision 117
SD-730, Control Building & Misc. Building HVAC, Revision 12

Proposed References to be provided to applicants during examination: None

NEW
FUNDAMENTAL

K/A# 290003.K3.04: Knowledge of the effect that a loss or malfunction of the CONTROL ROOM HVAC will have on following: Control room pressure. CFR: 41.7

EXPLANATION:

a. Incorrect: the Control Building Isolation is designed to maintain a positive pressure in the Control Room. In order to maintain a positive pressure, only one battery exhaust fan can be running. To achieve this, the Control Building Isolation will automatically shift the three battery exhaust fans to a configuration that only leaves one running. Since that shift failed to occur automatically in this scenario, a positive Control Room pressure will not be maintained (OI-730 page 4, SD-730 page 26).
b. Incorrect: the stem presents conditions in which a Control Building Isolation has automatically occurred. This isolation is designed to maintain a positive pressure in the Control Room (versus a negative pressure) (OI-730 page 4, SD-730 page 34).
c. Correct.
d. Incorrect: the Control Building Isolation is designed to maintain a positive pressure in the Control Room. In order to maintain a positive pressure, only one battery exhaust fan can be

running. To achieve this, the Control Building Isolation will automatically shift the three battery exhaust fans to a configuration that only leaves one running. Since that shift failed to occur automatically in this scenario, a positive Control Room pressure will not be maintained (OI-730 page 4, SD-730 page 26). Exhaust flow from the Battery Room would continue however since battery fans continue to operate.

QUESTION # 066

Given the following:

- Standby Diesel Generator (SBDG) 1G-31 is being run for testing.
- The electrical output of SBDG 1G-31 is 650 KW.
- The engine crankcase pressure of SBDG 1G-31 is 0.10 inch of water.
- The turbocharger inlet temperature of SBDG 1G-31 is 1150°F.

Which of the following represents a concern associated with extended operation of SBDG 1G-31 under these conditions?

a. Crankcase explosion due to explosive gas accumulation.

b. Exhaust system fire due to combustion product buildup.

c. Excessive turbocharger wear due to overheating.

d. Fuel injector failure due to incomplete combustion.

ANSWER:
b.

REFERENCE:
OI-324, Standby Diesel Generator System, Revision 113
SD-324, Standby Diesel Generator System, Revision 15

Proposed References to be provided to applicants during examination: None

NEW
FUNDAMENTAL

K/A #: Generic K/A 2.1.32: Ability to explain and apply system limits and precautions. CFR: 41.10

EXPLANATION:

a. Incorrect: high crankcase pressure indicates the possible existence of an explosive gas mixture, with the possibility of a crankcase explosion (as discussed in the Precautions of OI-324). The crankcase pressure switches actuate at 0.5" water pressure. While the engine crankcase is normally maintained at a slightly negative pressure during operation, the value provided in the stem does not yet present an explosion hazard (OI-324 page 5, SD-324 page 11).
b. Correct: the KW loading value provided (650 KW) represents 20% of the rated load (3250 KW) of a SBDG (SD-324 page 7). OI-324 contains the following Precaution: “Avoid prolonged periods of operation at less than 25% load to avoid buildup of incomplete combustion products in the exhaust lines (engine souping), with the possibility of fire upon return to full load” (OI-324 page 5).
c. Incorrect: OI-324 contains Precautions that “Turbocharger inlet temperature should not exceed 1200°F”, and that “Diesel engine exhaust temperature shall not exceed 1100°F” (OI-

324 page 5). The turbocharger inlet temperature provided (1150°F) is below the correct limit of 1200°F.

d. Incorrect: OI-324 contains a precaution against prolonged periods of operation at less than 25% load to avoid buildup of incomplete combustion products (OI-324 page 5). The component of concern is the exhaust lines however, and not the fuel injectors.

QUESTION # 067

Given the following:

- The plant was operating normally at full power.
- The operator observed from SPDS data that scram criteria were met.

Based on the information above, what would be the proper response?

a. Scram the reactor immediately.

b. Consult with the CRS, and then scram the reactor.

c. Validate SPDS data with permanent plant instrumentation, consult with the CRS, and then scram the reactor.

d. Validate SPDS data with permanent plant instrumentation, and then scram the reactor.

ANSWER:
d.

REFERENCE:
ACP 1410.1, “Conduct of Operations,” Rev. 100, pages 21, 24 and 25.

Proposed References to be provided to applicants during examination: None

NEW

FUNDAMENTAL

K/A # G2.1.39: Knowledge of conservative decision making practices. CFR: 41.10

EXPLANATION:
a. Incorrect: Per ACP 1410.1, no emergency action will be taken based on the SPDS data alone.
b. Incorrect: Per ACP 1410.1, no emergency action will be taken based on the SPDS data alone AND CRS consultation is not required.
c. Incorrect: CRS consultation is not required - Any on-shift RO or SRO has the authority to reduce power or shutdown the reactor when it is determined that the safety of the reactor is in jeopardy.
d. Correct: Any on-shift RO or SRO has the authority to reduce power or shutdown the reactor when it is determined that the safety of the reactor is in jeopardy.

QUESTION # 068

Given the following:

- The plant has been synchronized to the grid following a refueling outage.
- Current plant power is 50%.
- Electrical Maintenance is preparing to conduct troubleshooting on the Main Generator voltage regulator circuitry due to oscillations in output.

In accordance with ODI-032, Transmission Notification, which subsequent occurrence(s) below would subsequently require notification of the FPLE Real Time Desk to occur AS SOON AS POSSIBLE?

A) Main Generator lockout occurs resulting in a reactor scram.
B) Main Generator voltage regulator trips to manual.
C) Main Generator electrical output lowers by 10 MWe.

a. ONLY 'A'

b. 'A' & 'B'

c. 'A' & 'C'

d. 'B' & 'C'

ANSWER:
c.

REFERENCE:
ODI-032, Transmission Notification, Revision 5

Proposed References to be provided to applicants during examination: None

NEW
FUNDAMENTAL

K/A #: Generic K/A 2.2.17: Knowledge of the process for managing maintenance activities during power operations, such as risk assessments, work prioritization, and coordination with the transmission system operator. CFR: 41.10

EXPLANATION:

a. Incorrect: commencement of any Derate (a power reduction of greater than 5 MWe in plant electrical output due to conditions other than weather changes) requires notification of the FPLE Real Time Desk as soon as possible (ODI-032 page 3).
b. Incorrect: in accordance with ODI-032, the Main Generator voltage regulator tripping to MANUAL requires a notification within 30 minutes to ITC Midwest, MISO, and FPLE Real Time Desk. The 30 minute notification time limit is a FERC requirement (ODI-032 page 6). Also, commencement of any Derate (a power reduction of greater than 5 MWe in plant electrical output due to conditions other than weather changes) requires notification of the FPLE Real Time Desk as soon as possible (ODI-032 page 3).
c. Correct: in accordance with ODI-032, a plant trip requires a notification to ITC Midwest and FPLE Real Time Desk as soon as possible. This requirement is further clarified in the following

footnote “As soon as possible – At the earliest time possible; however, the Operations Shift Manager’s first priority is to direct and oversee the crew’s response to the unit operational challenge” (ODI-032 pages 3 and 6). Also, commencement of any Derate (a power reduction of greater than 5 MWe in plant electrical output due to conditions other than weather changes) requires notification of the FPLE Real Time Desk as soon as possible (ODI-032 page 3).

d. Incorrect: in accordance with ODI-032, the Main Generator voltage regulator tripping to MANUAL requires a notification within 30 minutes to ITC Midwest, MISO, and FPLE Real Time Desk. The 30 minute notification time limit is a FERC requirement (ODI-032 page 6).

QUESTION # 069

A reactor startup is in progress.

Conditions at the beginning of the startup and currently are listed below:

	Beginning of Startup (@100% Rod Density)	Currently (@80% Rod Density)
Channel	Counts	Counts
SRM A	9	85
SRM B	11	100
SRM C	8	90
SRM D	10	95

The reactor is NOT critical and there is one rod left to pull to complete the current group.

In order to pull this control rod to continue the startup, what must be done per IPOI-2, Startup?

a. Continue using continuous withdrawal until the current group is complete, then use single notch withdrawal until 75% rod density is achieved

b. Change to single notch withdrawal immediately and continue with single notch withdrawal until 75% rod density is achieved

c. Change to single notch withdrawal until the current group is complete, then resume continuous rod withdrawal for the next group until the reactor is critical

d. Continue using continuous withdrawal until all SRM count rates have increased by a factor of 10, then switch to single notch withdrawal until the reactor is critical

ANSWER:
b.

REFERENCE:
IPOI-2, Startup, Rev.140

Proposed References to be provided to applicants during examination: None

BANK – 2001 NRC Exam

HIGHER

K/A # G2.2.2: Ability to manipulate the console controls as required to operate the facility between shutdown and designated power levels. CFR: 41.6 / 41.7

EXPLANATION:

a. Incorrect - Must switch to single notch withdrawal
b. Correct - Per IPOI step 27(b) - If any SRM count rate has increased by a factor of 10 prior to reaching 75% rod density, then conduct single rod notch withdrawal until the 75% rod density is achieved (all RWM Group 2 rods full out). In this case SRM "C" has increased by a factor of 10.
c. Incorrect - Must switch to single notch withdrawal and remain in single notch withdrawal until the 75% rod density is achieved.
d. Incorrect - Must switch to single notch withdrawal

ORIGINAL QUESTION

A reactor startup is in progress. Conditions just prior to the startup and currently are listed below:

	Beginning of Startup	Currently
•	SRM A at 9 cps	SRM A at 85 cps
•	SRM B at 11 cps	SRM B at 100 cps
•	SRM C at 8 cps	SRM C at 90 cps
•	SRM D at 10 cps	SRM D at 95 cps
•	Moderator temperature was 148°F	Moderator temperature was 149°F

The reactor is NOT critical and you still have one rod left to pull to complete the A12 sequence. In order to pull this control rod to continue the startup, what must you do per IPOI-2 concerning the method of control rod withdrawal?

a. Change from continuous withdrawal to group notch withdrawal.
b. Change from continuous withdrawal to single rod notch withdrawal.
c. Change from single rod notch withdrawal to group notch withdrawal.
d. Change from single rod notch withdrawal to continuous rod withdrawal.

ANSWER: b

Distracter 1: From continuous withdrawal to group notch withdrawal is directed after 75% density has been reached if SRM count rate has not increased by a factor of ten.
Distracter 2: From single notch withdrawal to group notch withdrawal is directed after 75% density has been reached if SRM count rate has increased by a factor of ten.
Distracter 3: From Single notch withdrawal to continuous withdrawal is never directed.

REFERENCE: IPOI 2
K/A System: GENERIC
K/A Number: 2.2.2 (Ability to manipulate the console controls as required to operate the facility between shutdown and designated power levels.)

QUESTION # 070

Given the following:

- The plant was operating at 100% power when a severe transient occurred.
- During the transient 'B' Recirculation Pump tripped.
- 'A' Recirculation Pump remains in operation.

Based upon the conditions above, which of the following describes the Minimum Critical Power Ratio Safety Limit that currently applies?

a. 1.10 while operating at <10% rated core flow

b. 1.10 while operating at ≥10% rated core flow

c. 1.12 while operating at <10% rated core flow

d. 1.12 while operating at ≥10% rated core flow

ANSWER:
d.

REFERENCE:
DAEC TS Safety Limit 2.1.1, Amendment 243
DAEC TS Bases 2.1.1, Amendment 223
DAEC UFSAR, Revision 18

Proposed References to be provided to applicants during examination: None

NEW
FUNDAMENTAL

K/A #: Generic K/A 2.2.22: Knowledge of limiting conditions for operations and safety limits.
CFR: 41.5

EXPLANATION:

a. Incorrect: MCPR shall be ≥ 1.12 for single recirculation loop operation with core flow ≥ 10% rated core flow. 1.10 is the two recirculation loop safety limit (TS Safety Limit 2.1.1).
b. Incorrect: MCPR shall be ≥ 1.12 for single recirculation loop operation. 1.10 is the two recirculation loop safety limit (TS Safety Limit 2.1.1).
c. Incorrect: MCPR shall be ≥ 1.12 for single recirculation loop operation with core flow ≥ 10% rated core flow (TS Safety Limit 2.1.1).
d. Correct.

QUESTION # 071

Given the following:

- A major plant event has occurred resulting in highly elevated radiation levels in the power block and the declaration of a General Emergency.
- There is an injured man pinned in the reactor building and personnel are needed to rescue the individual.

Assuming that the rescue personnel are not volunteers, what is the maximum radiation exposure that may be authorized for the personnel performing this rescue activity?

a. >25 REM

b. 25 REM

c. >10 REM but <25 REM

d. 10 REM

ANSWER:
b.

REFERENCE:
Form OSC-13, Guidance on Dose limits for Workers Performing Emergency Services, Rev. 0

Proposed References to be provided to applicants during examination: None

NEW
FUNDAMENTAL

K/A #: Generic K/A 2.3.4: Knowledge of radiation exposure limits under normal or emergency conditions. CFR: 41.12

EXPLANATION:

a. Incorrect: >25 Rem may be authorized for lifesaving or protection of large populations, but only on a **voluntary basis** to persons fully aware of the risks involved (Form OSC-13).
b. Correct: 25 Rem is the maximum that may be authorized for life-saving or protection of large populations (Form OSC-13).
c. Incorrect: 10 Rem is the maximum that may be authorized for the protection of valuable equipment. 25 Rem is the maximum that may be authorized for life-saving or protection of large populations (Form OSC-13).
d. Incorrect: 10 Rem is the maximum that may be authorized for the protection of valuable equipment (Form OSC-13).

QUESTION # 072

Given the following:

- The plant is shutdown.
- At the request of the Operations Department, Health Physics (HP) has established a temporary Locked High Radiation Area (LHRA).
- Operations Department work is expected to be conducted in this area for the next week.
- An operator was briefed on the job and on the associated RWP is now seeking entry into the temporary LHRA.

Based upon the conditions above, _____ can grant the operator permission to enter the Temporary LHRA, and _____ can issue the key.

a. EITHER HP Department or the OSM/CRS
   ONLY the HP Department

b. ONLY the HP Department
   ONLY the HP Department

c. ONLY the HP Department
   EITHER HP Department or the OSM/CRS

d. EITHER HP Department or the OSM/CRS
   EITHER HP Department or the OSM/CRS

ANSWER:
b.

REFERENCE:
HPP 3104.01, Additional Control of Access to High Radiation Areas and Above, Revision 59
RP-AA-103-1002, High Radiation Area Controls, Revision 2

Proposed References to be provided to applicants during examination: None

DIRECT FROM BANK (DAEC)
FUNDAMENTAL

K/A #: Generic K/A 2.3.13: Knowledge of radiological safety procedures pertaining to licensed operator duties, such as response to radiation monitor alarms, containment entry requirements, fuel handling responsibilities, access to locked high-radiation areas, aligning filters, etc. CFR: 41.12

EXPLANATION:

a. Incorrect: 1st part wrong, 2nd part correct. Under emergency conditions, the OSM/CRS can grant.
b. Correct.
c. Incorrect: 1st part correct, 2nd part wrong. The OSM/CRS maintains a set of LHRA Master Keys.
d. Incorrect: 1st part wrong, 2nd part wrong. Under emergency conditions, the OSM/CRS can grant permission to enter; and the OSM/CRS maintains a set of LHRA Master Keys.

ORIGINAL DAEC BANK QUESTION

DAEC is shutdown.

At the request of the Operations Department, HP has constructed a Temporary Locked High Radiation Area (LHRA). It is expected that Operations Department work will be conducted in this area for the next four days.

Subsequently, at the start of the shift, an operator who has been briefed on the job and is on the associated RWP is seeking entry into the Temporary LHRA.

Which ONE of the following identifies...

(1) who can grant the operator permission to enter the Temporary LHRA
AND
(2) who can issue the key?

A. (1) EITHER HP or the OSM/CRS can grant permission to enter, AND
(2) ONLY HP can issue the entry key.

B. (1) ONLY HP can grant permission to enter, AND
(2) ONLY HP can issue the entry key.

C. (1) ONLY HP can grant permission to enter, AND
(2) EITHER HP or the OSM/CRS can issue the entry key.

D. (1) EITHER HP or the OSM/CRS can grant permission to enter, AND
(2) EITHER HP or the OSM/CRS can issue the entry key.

Answer: B

Answer Explanation:

ACP-1411.13 (p4, 14; Rev 30)
Steps 3.2 (3) and (5) (a), Attachment 2, Step (2), Bullet 3
Correct - 1st part correct, 2nd part correct. According to ACP-1411.13 (p14; Rev 30) Attachment 2, Step (2), Bullet 3, permission to enter the area may be granted only by a Senior/Journeyman HP
technician or HP Supervisor (or a Control Room Supervisor / Operations Shift Manager in an emergency). Since this is NOT an emergency, ONLY the HP representative can grant permission to
enter. According to ACP-1411.13 (p4; Rev 30) Step 3.2 (3), the Master keys for LHRA shall be under
the administrative control of Health Physics Supervisor and the Operations Shift Manager/Control Room Supervisor. However, according to ACP-1411.13 (p4; Rev 30)
Step 3.2 (5) (a) the Operations Shift Manager/Control Room Supervisor on duty shall only be used for urgent or emergency access to these areas as determined by the Operations Shift Manager/Control
Room Supervisor. Since this is NOT an emergency, the Key must be obtained from HP.
Answer: B

Plausible Distractors:
A. Incorrect - 1st part wrong, 2nd part correct. Under emergency conditions, the OSM/CRS can grant
permission to enter.
C. Incorrect - 1st part correct, 2nd part wrong. The OSM/CRS maintains a set of LHRA Master

Keys.
D. Incorrect - 1st part wrong, 2nd part wrong. Under emergency conditions, the OSM/CRS can grant permission to enter; and the OSM/CRS maintains a set of LHRA Master Keys.

QUESTION # 073

(Question withheld from public disclosure due to containing non-safeguards security-related information.)

K/A # 2.4.28: Knowledge of procedures related to a security event (non-safeguards information)

QUESTION # 074

The "Torus Level Control Leg" of EOP 2 directs the operators to maintain Torus level above 7.1 feet. In the event this cannot be maintained, a reactor scram is required.

Which of the following describes the condition this action is intended to prevent?

a. a loss of the pressure suppression function of the Torus by maintaining the Drywell-to-Torus downcomers adequately submerged.

b. over pressurizing the Torus with HPCI running and exhausting directly to the Torus air space.

c. over pressurizing the Torus with an SRV open due to uncovering the "T-Quenchers" and bypassing the pressure suppression function.

d. a loss of Torus level indication by maintaining the lower level instrument tap adequately submerged.

ANSWER:
a.

REFERENCE:
DAEC EOP Bases Document, EOP 2 – Primary Containment Control Guideline, Revision 14

Proposed References to be provided to applicants during examination: None

DIRECT FROM BANK (DAEC)
FUNDAMENTAL

K/A #: Generic K/A 2.4.18: Knowledge of the specific bases for EOPs. CFR: 41.10

EXPLANATION:

a. Correct: EOP Basis states a torus level of 7.1 ft. corresponds to the bottom of the drywell-to-torus downcomers. Torus levels below 7.1 ft. would result in loss of the pressure suppression function of the primary containment (e.g., during a LOCA, steam entering the torus would not be fully condensed).
b. Incorrect: The HPCI Turbine exhaust line discharges at 5.8' torus water level, which must be kept covered, or steam exhaust would not be condensed, threatening containment. 5.8' is close to 7.1', but incorrect.
c. Incorrect: The SRV downcomers discharge at 4.5' Torus water level, which must be kept covered, or steam would not be condensed, threatening containment. 4.5' is close to 7.1 ', but incorrect.
d. Incorrect: One of the Torus level breakpoints is due to the level instrument tap, however the breakpoint is not 7.1'.

ORIGINAL DAEC BANK QUESTION

The "Torus Level Control Leg" of EOP 2 directs the operators to maintain Torus level above 7.1 feet; and, if it can't be, the reactor shall be scrammed.

The basis of this is to prevent...

A. a loss of the pressure suppression function of the Torus by maintaining the Drywell-to-Torus downcomers adequately submerged.

B. over pressurizing the Torus with HPCI running and exhausting directly to the Torus air space.

C. over pressurizing the Torus with an SRV open due to uncovering the "T-Quenchers" and bypassing the pressure suppression function.

D. a loss of Torus level indication by maintaining the lower level instrument tap adequately submerged.

Answer: A

Answer Explanation:
ANSWER:
EOP Basis states a torus level of 7.1 ft. corresponds to the bottom of the drywell-to-torus downcomers. Torus levels below 7.1 ft. would result in loss of the pressure suppression function of the primary containment (e.g., during a LOCA, steam entering the torus would not be fully condensed).

DISTRACTORS:
The HPCI Turbine exhaust line discharges at 5.8' torus water level, which must be kept covered, or steam exhaust would not be condensed, threatening containment. 5.8' is close to 7.1', but incorrect.

The SRV downcormers discharge at 4.5' Torus water level, which must be kept covered, or steam would not be condensed, threatening containment. 4.5' is close to 7.1 ', but incorrect.

One of the Torus level breakpoints is due to the level instrument tap, however the breakpoint is not 7.1'.

Examination Outline Cross-reference:	Level	RO	SRO
	Tier #	3	
	Group #		
	K/A #	General 2.4.19	
	Importance Rating	3.4	

Knowledge of EOP layout, symbols, and icons.

Proposed Question: RO Question # 75

While reviewing the EOP flowcharts you come across a symbol that is a diamond shape with an arrow exiting the right side and another arrow out the bottom of the diamond shape.

What does this symbol indicate?

A. Decision Step

B. Hold/Wait Point

C. Instructional Step

D. Concurrent Execution

Proposed Answer: A

Explanation (Optional):

A. Correct

B. Incorrect This is an octagon

C. Incorrect This is a box

D. Incorrect this is a downward triangle

Technical Reference(s): Bases Flow Chart Use rev 10 pg 12

Proposed References to be provided to applicants during examination:

Learning Objective: (As available)

Question Source:	Bank #	X	Fermi 2
	Modified Bank #		(Note changes or attach parent)
	New		

Question History: Last NRC Exam: 2003

Question #99 on the 2003 Fermi RO Written Exam

Question Cognitive Level: Memory or Fundamental Knowledge

10 CFR Part 55 Content: 55.41

55.43

Comments:

QUESTION # 076

The unit was initially operating at full rated power with all systems operating in a normal full power lineup and NO systems out of service or inoperable.

Reactor Recirculation Pump 'A' tripped, resulting in the following indications:

- Reactor Recirculation Loop A Jet Pump Flow is 2 Mlbm/hr
- Reactor Recirculation Loop B Jet Pump Flow is 27 Mlbm/hr
- Core Plate ΔP as indicated on PDR-4528 is 4.9 psid
- Reactor Power is 65% Rated Thermal Power (RTP)
- RPV Water Level is being automatically controlled at setpoint

Using the attached figures, determine which of the following actions should to be directed to the At-The-Controls Operator.

QUESTION

a. Insert control rods until Reactor Power is less than < 60% RTP – ONLY

b. Reduce Reactor Recirculation Pump 'B' speed until Reactor Power is less than 60% RTP – ONLY

c. Reduce Reactor Recirculation Pump 'B' speed until Reactor Recirculation Loop B Jet Pump Flow is less than 25 Mlbm/hr – ONLY

d. Reduce Reactor Recirculation Pump 'B' speed until both Reactor Power is less than 60% RTP AND Reactor Recirculation Loop B Jet Pump Flow is less than 25 Mlbm/hr

ANSWER:
a.

REFERENCE:
AOP 255.2, Power/Reactivity Abnormal Change
AOP 264, Loss of Recirc Pump(s)
IPOI 3, Power Operations (33% – 100% Rated Power)

Proposed References to be provided to applicants during examination:

- Core Flow vs Core Plate Differential Pressure
- DAEC Power/Flow Map

NEW

HIGHER

K/A 295001 AA 2.06 Ability to determine and/or interpret the following as they apply to PARTIAL OR COMPLETE LOSS OF FORCED CORE FLOW CIRCULATION : Nuclear boiler instrumentation. (CFR: 41.10 / 43.5)

EXPLANATION:

a. Correct – Per the administrative limits given AOP 264, Reactor Power shall be less than or equal to 60% RTP and the procedure directs that the power reduction be accomplished using control rods.
b. Incorrect – AOP 264 directs that the power reduction be accomplished using control rods. Plausible since reducing flow will also reduce power.
c. Incorrect – Per the administrative limits given AOP 264, Total Core Flow shall be maintained less than or equal to 25.95 Mlbm/hr. Total Core flow is 25 Mlbm/hr (Loop B flow minus Loop A flow and can be verified using the Core Flow vs Core Plate d/p). Plausible if applicant believes that loop flow must be maintained less that the limit.
d. Incorrect – See above.

SRO Only Guidance

E. Assessment of facility conditions and selection of appropriate procedures during normal, abnormal, and emergency situations. [10 CFR 55.43(b)(5)]

This 10 CFR 55.43 topic involves both 1) assessing plant conditions (normal, abnormal, or emergency) and then 2) selecting a procedure or section of a procedure to mitigate, recover, or with which to proceed.

One area of SRO level knowledge (with respect to selecting a procedure) is knowledge of the content of the procedure versus knowledge of the procedure's overall mitigative strategy or purpose.

QUESTION # 077

Given the following:

- The plant is operating at 75% power
- During routine checks on 125VDC Battery 1D1 it is observed that pilot cell electrolyte level is below the minimum level indication mark, but remains above the top of the plates.
- Electrical Maintenance subsequently reports that battery pilot cell float voltage for 125VDC Battery 1D1 is 2.08.V.

Based upon the conditions above, ITS 3.8.6 Condition(s) ___ is (are) applicable, and the Division I 125 VDC electrical power distribution system as a whole can be considered _____.

a. "A" ONLY
   Operable

b. "A" ONLY
   Inoperable

c. "A" and "B"
   Operable

d. "A" and "B"
   Inoperable

ANSWER:
a.

REFERENCE:
DAEC Technical Specifications 3.8.4 and 3.8.6
DAEC Technical Specifications Bases 3.8.4 and 3.8.6

Proposed References to be provided to applicants during examination:
DAEC ITS 3.8.6 to include Table 3.8.6-1 (no basis information to be provided)

NEW
HIGHER

K/A # 295004.A2.03: Ability to determine and/or interpret the following as they apply to PARTIAL OR COMPLETE LOSS OF D.C. POWER: Battery voltage.

EXPLANATION:
a. Correct.
b. Incorrect: Low electrolyte level (Categories A and B) will result in entry in ITS 3.8.6 Condition 'A'. Condition 'A' requires checking battery float voltage; the values provided in the stem for electrolyte level and battery voltage meet the minimum requirement of Category 'C' and will not result in additional entry into ITS 3.8.6 Condition 'B' (Condition 'B' directs that the affected battery must be declared inoperable). The second part of the question does not refer to the battery operability directly, but rather the Division I 125 VDC distribution system as a whole. To address operability at that level, knowledge of the basis of ITS 3.8.6 is required; specifically the basis for Condition 'B' states that "the corresponding DC electrical power subsystem must be declared inoperable." This is also part of the ITS 3.8.4 basis which requires that the associated battery be operable for the DC subsystem to be operable. In this instance, operability is maintained.
c. Incorrect. Low electrolyte level (Categories A and B) will result in entry in ITS 3.8.6 Condition 'A'. Condition 'A' requires checking battery float voltage; the values provided in the stem for electrolyte level and battery voltage meet the minimum requirement of Category 'C' and will not result in additional entry into ITS 3.8.6 Condition 'B' (Condition 'B' directs that the affected

battery must be declared inoperable). The second part of the question does not refer to the battery operability directly, but rather the Division I 125 VDC distribution system as a whole. To address operability at that level, knowledge of the basis of ITS 3.8.6 is required; specifically the basis for Condition 'B' states that "the corresponding DC electrical power subsystem must be declared inoperable." This is also part of the ITS 3.8.4 basis which requires that the associated battery be operable for the DC subsystem to be operable. In this instance, operability is maintained.

d. Incorrect: Low electrolyte level (Categories A and B) will result in entry in ITS 3.8.6 Condition 'A'. Condition 'A' requires checking battery float voltage; the values provided in the stem for electrolyte level and battery voltage meet the minimum requirement of Category 'C' and will not result in additional entry into ITS 3.8.6 Condition 'B' (Condition 'B' directs that the affected battery must be declared inoperable). The second part of the question does not refer to the battery operability directly, but rather the Division I 125 VDC distribution system as a whole. To address operability at that level, knowledge of the basis of ITS 3.8.6 is required; specifically the basis for Condition 'B' states that "the corresponding DC electrical power subsystem must be declared inoperable." This is also part of the ITS 3.8.4 basis which requires that the associated battery be operable for the DC subsystem to be operable. In this instance, operability is maintained.

Comments: SRO-only question justification is the link to 10CFR55.43(b)(2) "Facility operating limitations in the technical specifications and their bases."

QUESTION # 078

The plant was operating at rated thermal power on an August afternoon when the operating GSW pump tripped. The following energized:

- 1C06A, B-3"A" GSW PUMP 1P-89A TRIP OR MOTOR OVERLOAD
- 1C06A, B-3 GSW PUMPS 1P-89A/B/C DISCH HEADER LO PRESSURE

The operators entered and began executing the steps of AOP 411, “GSW Abnormal Operation.” The operators were unsuccessful in starting either of the other two GSW pumps and the following energized:

1C05A, A-8 PCIS CHANNEL "A" STEAM TUNNEL HI TEMP
1C05B, A-7 PCIS CHANNEL "B" STEAM TUNNEL HI TEMP

Shortly thereafter, the MSIVs shut. The CRS should direct the operators to:

a. Insert a manual scram ONLY.

b. Enter EOP-3 and verify all rods are fully inserted.

c. Trip both Recirc MG Sets and insert a manual scram.

d. Send an operator to verify both Steam Tunnel Cooling fans 1V-AC-17A and B are running.

ANSWER
b.

REFERENCE
AOP 411, GSW Abnormal Operation

Proposed References to be provided to applicants during examination: None

NEW

HIGHER

K/A: 295018 Partial or Total Loss of CCW: 2.1.20: Ability to interpret and execute procedure steps. CFR: 41.10 / 43.5

EXPLANATION:
a. Incorrect – scram should have already occurred (“no GSW pumps are running and flow cannot be restored immediately”).
b. Correct – Step 7 (p. 4)
c. Incorrect – required if high temperatures occur on the recirc MG sets.
d. Incorrect – would have been completed prior to the MSIV closure.

QUESTION # 079

Given the following:

- Analysis indicates that maximum allowed drywell temperature limit of Technical Specification 3.6.1.4, Drywell Air Temperature, can be raised to 136°F.

Which of the following describes the correct process for making the change described above?

a. The plant may update the technical specification, but must subsequently inform the NRC in a biannual report.

b. The plant must transmit the revised technical specification to the NRC in accordance with TS 5.5.10 (Technical Specification Bases Control Program).

c. The plant must file an application for a technical specification amendment with the NRC prior to making the change.

d. The plant may make technical specification changes that are fully bounded by the Safety Evaluation without informing the NRC.

ANSWER:
c.

REFERENCE:
10 CFR 50.59 Changes, Tests and Experiments.
10 CFR 50.90 Application for Amendment of License, Construction Permit, or Early Site Permit.
ACP 102.24, Preparation, Review, and Processing of Bases Changes, Revision 9
DAEC TS 3.6.1.4, Drywell Air Temperature
DAEC TS 5.5.10, Technical Specifications (TS) Bases Control Program

Proposed References to be provided to applicants during examination: None

NEW
FUNDAMENTAL

K/A #: Generic K/A 2.2.38: Knowledge of conditions and limitations in the facility license.
Associated topic: 295028 (High Drywell Temperature)

EXPLANATION:

a. Incorrect: The plant makes a biennial update to the NRC for UFSAR changes, not for TS (ACP 102.24 page 7 and 10 CFR 50.59).
b. Incorrect: After implementation of TS Bases changes the revised Bases pages are formally transmitted to the NRC in accordance with the Technical Specification Bases Control Program (TS 5.5.10). This program only concerns the Bases however, and not TS (ACP 102.24 page 7 and DAEC TS 5.5.10).
c. Correct: when a licensee desires to amend their license (of which TS are a part), application for an amendment must be filed with the NRC (10 CFR 50.90).
d. Incorrect: when processing TS Bases changes associated with implementation of a licensing amendment, plant staff ensures that those changes are fully bounded by the NRC

safety evaluation for the amendment. This scenario involves a change to the TS themselves however, and not just the TS Bases (ACP 102.24 page 5).

Comments: SRO-only question justification is the link to 10CFR55.43(b)(1) "Conditions and limitations in the facility license."

Specifically, in reference to the "Clarification Guidance for SRO-only Questions", this question covers "Processes for TS and FSAR changes".

QUESTION # 080

Given the following:

A radiological release occurred while operating at power.

- Annunciator 1C35A, C-3 REACTOR BLDG KAMAN 3,4,5,6,7 & 8 HI RAD OR MONITOR TROUBLE, was activated
- Annunciator 1C05B, C-8 PCIS GROUP “3” ISOLATION INITIATED, was activated
- Reactor Building Ventilation has isolated
- Both Standby Gas Treatment (SBGT) trains are operating
- 1C23, Reactor Building to atmosphere indicates -1.1 inches water
- Turbine Building Ventilation isolated
- Offsite release is above the ALERT Level

In accordance with EOP-4, which ventilation system would the CRS direct re-started and why?

a. Turbine Building Ventilation to filter ventilation exhaust from the Turbine Building.

b. Main Plant Exhaust Fans to prevent unmonitored ground release of radioactivity.

c. Turbine Building Ventilation to prevent unmonitored ground release of radioactivity.

d. Reactor Building Ventilation to reduce the Reactor Building area and equipment temperatures.

ANSWER:
c.

REFERENCES:
EOP Bases, Revision 9, pages 4 – 5;
ARP 1C05B, C-8, Revision 98;
ARP 1C35A, C-3, Revision 43

Proposed References to be provided to applicants during examination:
None

MODIFIED (2005 Fitzpatrick NRC Exam, revised stem and one distractor)

HIGHER

K/A # 295038 2.2.44: Ability to interpret control room indications to verify the status and operation of a system, and understand how operator actions and directives affect plant and system conditions. (CFR: 41.5 / 43.5 / 45.12)

EXPLANATION:
a. Incorrect: There is no filtration on TB exhaust (EOP-4 Bases).
b. Incorrect: Common misconception, EF 1,2, & 3 do not trip on Group 3. Their exhaust from the plant is the sample point for Kaman 3-8. Main Plant exhaust fans are tripped on a RB

Kaman Hi Hi alarm concurrent with Group III isolation to prevent bypass of the SGTS filter units by air from the RB via main plant ventilation stack.

c. Correct:
d. Incorrect: RB vents are isolated and exhaust is routed to the main plant exhaust plenum. On a Group III isolation the Main Plant Exhaust fans are secured to prevent bypassing the SGTS filter units to preclude or limit untreated release to the environs (EOP-4 Bases).

QUESTION # 081

Given the following:

- The Main Control Room has been evacuated due to a fire.
- Torus Water Temperature is 106°F.

Where can Torus Water Temperature be obtained, and what action is required due to Torus Water Temperature?

a. Remote Shutdown Panel, 1C-392; it is required to maximize Torus Cooling with B RHR Loop IAW OI-149, Residual Heat Removal System.

b. Remote Shutdown Panel, 1C-392; it is required to maximize Torus Cooling with B RHR Loop IAW AOP-915, Shutdown Outside Control Room.

c. Remote Shutdown Panel, 1C-388; it is required to maximize Torus Cooling with B RHR Loop IAW OI-149, Residual Heat Removal System.

d. Remote Shutdown Panel, 1C-388; it is required to maximize Torus Cooling with B RHR Loop IAW AOP-915, Shutdown Outside Control Room.

ANSWER:
d.

REFERENCE:
EOP-2 Rev 16; AOP 915 Rev 53

Proposed References to be provided to applicants during examination: None

BANK-2007 DAEC NRC Exam

HIGHER

K/A 600000 (Plant Fire On Site)/2.4.35: Knowledge of local auxiliary operator tasks during an emergency and the resultant operational effects. (CFR: 41.10 / **43.5**)

EXPLANATION:
a. Incorrect: is plausible-location of TRANSFER Switch for TI-4325A (not indication), and wrong procedure for Torus Cooling operation.
b. Incorrect: is plausible-location TRANSFER Switch for TI-4325A (not indication).
c. Incorrect: is plausible-location of indication is correct, except wrong procedure for Torus Cooling operation.
d. Correct: location of indication is correct, and Torus Cooling operation is directed by AOP-915 per Section 4.

QUESTION # 082

Given the following:

- The plant is operating at 100% power.
- Lightning strikes are occurring in the vicinity of the plant site.
- ITC MIDWEST has reported minor grid fluctuations as a storm passes through the region.
- Main Generator MVAR output spikes 270 MVARS (out) and remains there.
- Main Generator hydrogen gas pressure is currently 45 psig, and megawatt output is 640 MWe.

Which of the following procedure sections should be implemented immediately?

a. AOP-304, GRID INSTABILITY, section titled “PREPARATION FOR HIGH GRID LOADING AND POTENTIAL INSTABILITY.”

b. AOP-304, GRID INSTABILITY, section titled “GRID INSTABILITY.”

c. AOP-903, SEVERE WEATHER section titled “HIGH WIND / SEVERE WEATHER / TORNADO WATCH [ADVISORY]”

d. AOP-903, SEVERE WEATHER section titled “HIGH WIND / SEVERE THUNDERSTORM WARNING”

ANSWER:
b.

REFERENCE:
AOP 304, Grid Instability, Revision 40
AOP 903, Severe Weather, Revision 49
OI-698, Main Generator System, Revision 87

Proposed References to be provided to applicants during examination: OI-698, Appendix 1, Estimated Capability Curves

NEW
HIGHER

K/A# 700000.A2.04: Ability to determine and/or interpret the following as they apply to GENERATOR VOLTAGE AND ELECTRIC GRID DISTURBANCES: VARs outside capability curve.

EXPLANATION:

a. Incorrect: AOP-304’s “PREPARATION FOR HIGH GRID LOADING AND POTENTIAL INSTABILITY” section could possibly be implemented based upon the stem conditions; however it only addresses ensuring that the generator voltage regulator is in automatic. It does not contain actions to control generator output if the generator capability curve is challenged (AOP-304 page 4).
b. Correct: MVAR loading is exceeding the generator capability curve based upon the conditions in the stem (OI-698 page 45). AOP-304’s “GRID INSTABILITY” section contains steps to:

- Establish critical parameter monitoring of Main Generator MVARs.
- Take actions as directed by ARPs and OIs and reduce reactor power and generator output as necessary to comply with DAEC procedures and protect DAEC equipment even if this will result in further degradation of the grid as necessary to maintain equipment within operating specifications.
- Monitor generator parameters on the Generator Estimated Capability Curve.
- Return Generator Voltage and MVARs to the desired level, once the grid has stabilized and as allowed by ITC MIDWEST (AOP-304 pages 8–12)

c. Incorrect: AOP-903's "HIGH WIND / SEVERE WEATHER / TORNADO WATCH [ADVISORY]" section could possibly be implemented based upon the conditions in the stem, but does not provide direction regarding response to storm related electrical effects to the grid/plant (AOP-903 pages 4-6).

d. Incorrect: AOP-903's "HIGH WIND / SEVERE THUNDERSTORM WARNING" section could possibly be implemented given that the storm has arrived at the site in the stem conditions, however it only contains steps to:
    - Contact ITC to check status of grid stability.
    - Relay information to the Real Time Desk and ITC regarding any known disturbances within the plant distribution network, and any plant malfunctions that may increase the potential for disturbing plant electrical output during a Severe Thunderstorm, or High Wind condition (AOP-903 pages 7-9)

Comments: SRO-only question justification is the link to 10CFR55.43(b)(5) "Assessment of facility conditions and selection of appropriate procedures during normal, abnormal, and emergency situations."

Specifically, in reference to the "Clarification Guidance for SRO-only Questions", this question covers "Assessing plant conditions (normal, abnormal, or emergency) and then selecting a procedure or section of a procedure to mitigate, recover, or with which to proceed."

APPENDIX 1

ESTIMATED CAPABILITY CURVES

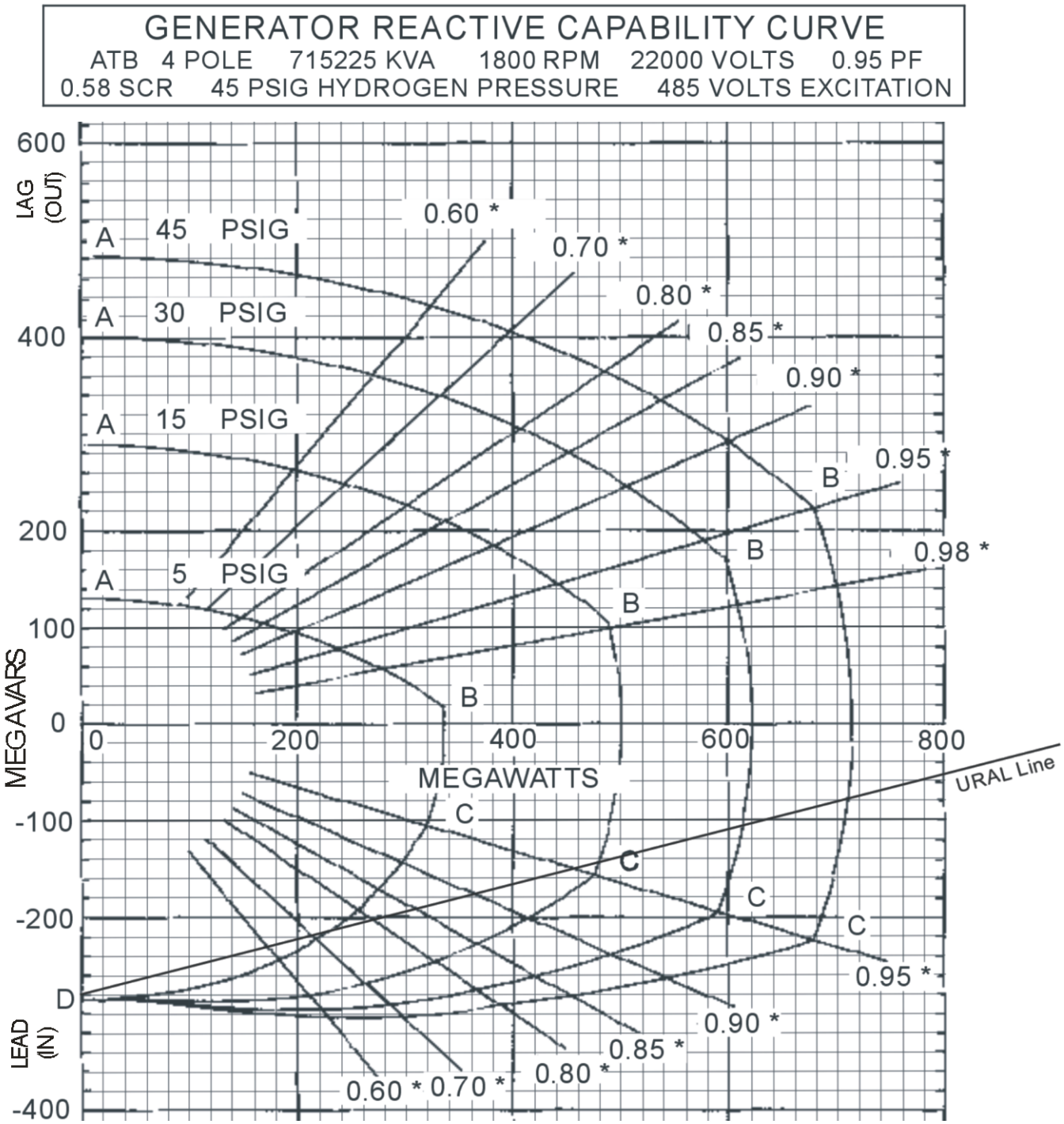

* PF (power factors)

CURVE AB LIMITED BY FIELD HEATING

CURVE BC LIMITED BY ARMATURE HEATING

CURVE CD LIMITED BY ARMATURE CORE END HEATING

QUESTION # 083

Given the following:

A plant startup and heatup is in progress, with the following conditions:

- Reactor Power is 6% and steady;
- Reactor pressure is 715 psig;
- RPV water level is + 191 inches.

An inadvertent positive reactivity addition occurs, resulting in a reactor scram.
The following parameters were observed during the accident:

- Reactor Power peaked at 29%;
- Reactor pressure peaked at 740 psig;
- RPV water level responded as expected for an uncomplicated reactor scram.

The required immediate actions of IPOI 5 have been completed.

What is the HIGHEST level of authority required in order to commence a reactor startup?

a. DAEC General Plant Manager
b. DAEC Operations Director
c. ORG Chairman
d. NRC

ANSWER:
d.

REFERENCE:
ACP 1410.1 Rev 100; IPOI 1 Rev. 140

Proposed References to be provided to applicants during examination: None

BANK – Cooper 2005 NRC Exam

HIGHER – SRO question per 10 CFR **55.43.1**

K/A # 295014 Inadvertent Reactivity Addition: G 2.1.23: Ability to perform specific system and integrated plant procedures during all modes of plant operation. CFR: 41.10 / 43.5

EXPLANATION:
a. Incorrect: plausible-always required per IPOI 1.
b. Incorrect: plausible-per IPOI 1, the Operations Manager may impose plant operating limitations for other special or unique circumstances.
c. Incorrect: plausible-per IPOI 1, ORG review of event and approval to start up is necessary if required.
d. Correct: during the accident reactor power increased to 21.7%, and with reactor pressure less than 785 psig, the reactor core safety limit was violated. Restart following a safety limit violation is only permitted after NRC review and authorization.

QUESTION # 084

Given that the plant was operating at approximately full power with the following conditions:

- A failed FULL-IN reed switch on ONE control rod.
- A complete loss of UNINTERRUPTIBLE AC POWER then occurred.
- The Reactor scrammed.

EOP 1, RPV CONTROL was entered due to RPV Low Level during the initial transient:

- All 8 RPS Scram Group A and B white lights were OFF.
- The Operator at the controls could not confirm that all rods were fully inserted.
- On the 1C05 Full Core Display, all LPRM downscale lights were ON.
- All IRMs were fully inserted, on range 3 or 4, reading mid-scale, and lowering on all available indications.
- RPV pressure was 900 psig and lowering slowly with all available Main Steam Lines Drains open.
- Standby Liquid Control (SBLC) had NOT injected.
- There were no challenges to Containment.

Which of the following correctly describes the correct procedure usage when directing further operator actions in this situation?

a. ALL operator actions must be directed from EOP 1 and IPOI 5. NO operator actions should be directed from the ATWS EOP.

b. Operator actions for reactivity control must be directed from the ATWS EOP. Operator actions for RPV level and pressure must be directed from EOP 1.

c. Operator actions for reactivity control will be directed from IPOI 5. Operator actions for RPV Pressure and Level must be directed from the ATWS EOP.

d. NO operator actions should be directed from either EOP 1 or IPOI 5. ALL operator actions must be directed from the ATWS EOP.

ANSWER:
c.

REFERENCE:
EOP 1, Revision 18
ATWS, Revision 21
BASES ATWS, Revision 17
AOP 357, Loss of 120 VAC Uninterruptable Power, Revision 44

Proposed References to be provided to applicants during examination: None

MODIFIED FROM BANK (DAEC)
HIGHER

K/A# 295015.A2.01: Ability to determine and/or interpret the following as they apply to INCOMPLETE SCRAM: Reactor power.

EXPLANATION:

a. Incorrect: Selected if Reactor is believed to be SD under all conditions per EOP 1 1st Recheck Statement. IPOI-5 is performed concurrently per EOP 1 RC-2.
b. Incorrect: Selected if ATWS is entered but the /Q 1st Recheck Statement is misapplied.
c. Correct: Rod position indication is lost with a UPS failure, which would also result in a Reactor Scram. The 1C05 APRM/IRM recorders are powered from Inst AC on the "A" channel and UPS on the "B" channels. Embedded in this question is the definition of "SHUTDOWN" from EOP Bases Flowchart Use and Logic: Reactor subcritical (power decreasing), and below point of adding heat (POAH) which is 20 on IRM Range 8. IRMs are on Range 3-4 and lowering. Reactor is not SD under all conditions so ATWS must be entered and /1 & /2 performed. At the top of the /Q leg is a Recheck Statement that says exit this flowpath (exit /Q only) and reenter IPOI-5 if reactor is shutdown. CRS must make this operational judgment or the next steps in /Q will trip the Recirc Pumps. CRS should remain in ATWS /L and /P legs. This question is based on a plant event.
d. Incorrect: Selected if the /Q 1st Recheck Statement is not observed or the definition of shutdown is not understood.

Comments: SRO-only question justification is the link to 10CFR55.43(b)(5) "Assessment of facility conditions and selection of appropriate procedures during normal, abnormal, and emergency situations."

Specifically, in reference to the "Clarification Guidance for SRO-only Questions", this question covers "Knowledge of diagnostic steps and decision points in the EOPs that involve transitions to event specific sub-procedures or emergency contingency procedures".

ORIGINAL DAEC BANK QUESTION

The plant was operating at 93% power with the following conditions:

☐ Initially the only equipment problem was a failed FULL-IN reed switch on ONE control rod.
☐ A complete loss of UNINTERRUPTIBLE AC POWER occurred.
☐ The Reactor scrammed.

EOP 1, RPV CONTROL has been entered due to RPV Low Level during the initial transient:

☐ All 8 RPS Scram Group A and B white lights are OFF.
☐ The Operator At The Controls reported that he cannot confirm that all rods are fully inserted.
☐ On the 1C05 Full Core Display, all LPRM downscale lights are ON.
☐ All IRMs are fully inserted, on range 3 or 4, reading mid-scale, and lowering on all available indications.
☐ RPV pressure is 900 psig and lowering slowly with all available Main Steam Lines Drains open.
☐ Standby Liquid Control (SBLC) was NOT injected.
☐ There are no challenges to Containment.

Which ONE of the following correctly describes how the CRS shall use the IPOI 5, REACTOR SCRAM, EOP 1 - RPV CONTROL, and the ATWS EOP procedures when directing further operator actions in this situation?

A. ALL operator actions will be directed from EOP 1 and IPOI 5. NO operator actions will be directed from the ATWS EOP.

B. Operator actions for reactivity control will be directed from the ATWS EOP. Operator actions for RPV level and pressure will be directed from EOP 1.

C. Operator actions for reactivity control will be directed from IPOI 5.
Operator actions for RPV Pressure and Level will be directed from the ATWS EOP.

D. NO operator actions will be directed from either EOP 1 or IPOI 5. ALL operator actions will be directed from the ATWS EOP.
Answer: C

Answer Explanation:
A: Incorrect - Selected if Reactor is believed to be SD under all conditions per EOP 1 1st Recheck Statement. IPOI-5 is performed concurrently per EOP 1 RC-2.

B: Incorrect - Selected if ATWS is entered but the /Q 1st Recheck Statement is misapplied

C: Correct - Rod position indication is lost with a UPS failure, which would also result in a Reactor Scram. The 1C05 APRM/IRM recorders are powered from Inst AC on the "A" channel and UPS on the "B" channels. Embedded in this question is the definition of "SHUTDOWN" from EOP Bases Flowchart Use and Logic: Reactor subcritical (power decreasing), and below point of adding heat (POAH) which is 20 on IRM Range 8. IRMs are on Range 3-4 and lowering. Reactor is not SD under all conditions so ATWS must be entered and /1 & /2 performed. At the

top of the /Q leg is a Recheck Statement that says exit this flowpath (exit /Q only) and reenter IPOI-5 if reactor is shutdown. CRS must make this operational judgment or the next steps in /Q will trip the Recirc Pumps. CRS should remain in ATWS /L and /P legs. This question is based on a plant event

D: Incorrect - Selected if the /Q 1st Recheck Statement is not observed or the definition of shutdown is not understood.

Technical Reference(s): EOP 1, Rev. 18
ATWS, Rev.21
BASES ATWS Rev. 17
AOP 357, Rev. 44, AUTOMATIC ACTIONS

QUESTION # 085

With the plant operating at 100% power, a fire was discovered in the Reactor Building.
The fire was extinguished with the deluge system, resulting in these conditions:

• HPCI Room Temperature is 160°F.
• HPCI Room Water Level is 3 inches.

Which of the following actions is required?

a. Enter IPOI-5, Reactor Scram and perform a subsequent plant shutdown.

b. Enter Emergency Depressurization and open Safety Relief Valves.

c. Enter EOP-3, Secondary Containment Control, and isolate the deluge system.

d. Enter EOP-1, RPV Control, and anticipate Emergency Depressurization.

ANSWER:
c.

REFERENCE:
EOP-3 Rev 20 (Bases)

Proposed References to be provided to applicants during examination: None

BANK - 2007 NRC Exam

HIGHER

K/A # 295036 Secondary Containment High Sump/Area Water Level/5
G 2.4.49: Ability to perform without reference to procedures those actions that require immediate operation of system components and controls. CFR: 41.10 / 43.2

EXPLANATION:
a. Incorrect: a reactor shutdown per the IPOIs would be performed if the same parameter was above Max Safe in two areas and a reduction in reactor pressure would not affect the leak rate.
b. Incorrect: an ED would be performed it two areas were above Max Safe and if reduction in reactor pressure would affect the leak rate.
c. Correct: per EOP 3, when any parameter is above Max Normal and the system is not required per the EOPs or to suppress a fire.
d. Incorrect: if any parameter is above Max Safe and a reduction in reactor pressure would affect the leak rate.

QUESTION # 086

Given the following:

- The plant is in Mode 4.
- The Residual Heat Removal (RHR) system is aligned for shutdown cooling.
- RHR Pump "A" is running.
- An equipment failure results in a spurious Primary Containment Isolation System (PCIS) Group 4 full isolation.

Based upon these conditions, which of the following describes the correct strategy to restore shutdown cooling?

a. Use AOP-149, Loss of Decay Heat Removal, to TRIP the "A" RHR pump and subsequently restore shutdown cooling.

b. Use ARP 1C05B (D-8), PCIS GROUP "4" ISOLATION INITIATED, to restore Group 4 Isolation valves to the desired lineup, and restore shutdown cooling.

c. Use AOP-149, Loss of Decay Heat Removal, to manually OPEN shutdown cooling suction valves MO-1908 and MO-1909 and restore shutdown cooling.

d. Use OI-264, Reactor Recirculation System, to START a Recirculation Pump to provide forced circulation.

ANSWER:
c.

REFERENCE:
AOP 149, Loss of Decay Heat Removal, Revision 15
ARP 1C05B, Revision 98
SD-149, Residual Heat Removal System, Revision 13

Proposed References to be provided to applicants during examination: None

NEW
HIGHER

K/A# 205000.A2.02: Ability to (a) predict the impacts of the following on the SHUTDOWN COOLING SYSTEM (RHR SHUTDOWN COOLING MODE); and (b) based on those predictions, use procedures to correct, control, or mitigate the consequences of those abnormal conditions or operations: Low shutdown cooling suction pressure.

EXPLANATION:

a. Incorrect: the spurious Group 4 isolation causes shutdown cooling suction valves MO-1908 and MO-1909 to both go shut. This removes the only suction pathway for RHR Pump ‘A’. To prevent damage to RHR Pump ‘A’ due to low suction pressure, a protective feature will cause an automatic trip. The logic of this protective feature is such that as soon either MO-1908 or MO-1909 begin to close, a trip of RHR Pump ‘A’ would immediately result (SD-149

page 12). While it would be reasonable to take action stop a pump which has lost suction in order to prevent damage, this action would not be necessary since it would occur automatically. Additionally, this action is contained in AOP-149.

b. Incorrect: ARP 1C05B (D-8) contains steps to correct the cause of the Group 4 isolation, reset the Group 4 logic, and to return Group 4 logic to the desired lineup. Prior to that point in the procedure however, ARP 1C05B (D-8) provides direction to perform AOP-149 if RHR was operating in the shutdown cooling mode. AOP-149 will subsequently provide direction that if an equipment failure results in an invalid Group 4 isolation, cooling may be restored by manually opening the applicable isolation valve (ARP 1C05B, AOP-149 pages 4 – 5).
c. Correct: the spurious Group 4 isolation causes shutdown cooling suction valves MO-1908 and MO-1909 to both go shut. This removes the only suction pathway for RHR Pump 'A'. To prevent damage to RHR Pump 'A' due to low suction pressure, a protective feature will cause an automatic trip. The logic of this protective feature is such that as soon either MO-1908 or MO-1909 begin to close, a trip of RHR Pump 'A' would immediately result (SD-149 page 12). AOP-149 contains direction that if an equipment failure results in an invalid Group 4 isolation, cooling may be restored by manually opening the applicable isolation valve (AOP-149 pages 4 – 5).
d. Incorrect: AOP-149 directs the starting of a Recirc Pump using OI-264 if shutdown cooling cannot be restored. Prior to that point in the procedure however, AOP-149 provides direction that if an equipment failure results in an invalid Group 4 isolation, cooling may be restored by manually opening the applicable isolation valve (AOP-149 pages 4 – 6).

Comments: SRO-only question justification is the link to 10CFR55.43(b)(5) "Assessment of facility conditions and selection of appropriate procedures during normal, abnormal, and emergency situations."

Specifically, in reference to the "Clarification Guidance for SRO-only Questions", this question covers "Assessing plant conditions (normal, abnormal, or emergency) and then selecting a procedure or section of a procedure to mitigate, recover, or with which to proceed."

QUESTION # 087

Given the following:

- A reactor scram has occurred from full power due to a complete Loss of Uninterruptible AC power.
- All 8 RPS Scram white lights are extinguished, but the 1C05 operator cannot confirm that all rods are fully inserted.
- All LPRM downscale lights are on and when the IRMs are fully inserted, they read between range 3 and 4 and are lowering.
- RPV pressure is 900 psig and rising very slowly with the Main Steam Line Drains open.
- SBLC was not injected.

(1) Is the reactor considered SHUTDOWN UNDER ALL CONDITIONS WITHOUT BORON?

AND

(2) How is the ATWS EOP used in this situation?

a. (1) NO
   (2) Exit only the /Q leg of the ATWS EOP.

b. (1) YES
   (2) Exit only the /Q leg of the ATWS EOP.

c. (1) NO
   (2) Exit the ATWS EOP and perform IPOI 5

d. (1) YES
   (2) Exit the ATWS EOP and perform IPOI 5.

ANSWER:
a.

REFERENCE:
ATWS – RPV CONTROL, REVISION 21
BASES – ATWS, REVISION 17

Proposed References to be provided to applicants during examination: None

DIRECT FROM BANK (DAEC)
HIGHER

K/A#: Generic K/A 2.4.18: Knowledge of the specific bases for EOPs. Associated topic: 211000 (SLC).

EXPLANATION:

a. Correct: per ATWS EOP Bases Discussion Page 4, "Shutdown under ALL conditions without boron" can be determined by relying on the Technical Specification demonstration of adequate shutdown margin:
    - - One control rod is out beyond position 00
    - - All other control rods are at position 00

    For other combinations of rod patterns and boron concentration, reactor engineering will need to perform a shutdown margin calculation. When either of the conditions identified in the Continuous Recheck Statement is achieved, it is appropriate to terminate boron injection, exit the ATWS EOP, and enter EOP 1 for control of the transient. Since these conditions are not given, the EOP may NOT be exited.

    Additionally, per ATWS EOP Bases Page 79: If the reactor is shutdown (subcritical, power below the POAH) without boron injected into the RPV, exit to the scram procedure is appropriate even though the margin to criticality may be small. Remaining in the power path under these shutdown conditions could lead to unnecessary actions such as tripping both recirculation pumps or injecting boron which might complicate recovery actions. Note that operators will continue to implement guidance in the level and pressure control paths until it has been determined that the reactor will remain shutdown under all conditions.
b. Incorrect: The conditions stated in the question stem do not meet the EOP Bases definition of Shutdown under ALL conditions without boron."
c. Incorrect: Only the q leg of the ATWS EOP may be exited. The entire EOP may not be exited until it is determined that you are shutdown under all conditions.
d. Incorrect: The conditions stated in the question stem do not meet the EOP Bases definition of Shutdown under ALL conditions without boron". The entire EOP would be exited if that were the case.

Comments: SRO-only question justification is the link to 10CFR55.43(b)(5) "Assessment of facility conditions and selection of appropriate procedures during normal, abnormal, and emergency situations."

Specifically, in reference to the "Clarification Guidance for SRO-only Questions", this question covers "Assessing plant conditions (normal, abnormal, or emergency) and then selecting a procedure or section of a procedure to mitigate, recover, or with which to proceed."

DAEC ORIGINAL BANK QUESTION

A reactor scram has occurred from full power due to a complete Loss of Uninterruptible AC power.

All 8 RPS Scram white lights are extinguished, but the 1C05 operator cannot confirm that all rods are fully inserted.

All LPRM downscale lights are on and when the IRMs are fully inserted, they read between range 3 and 4 and are lowering.

RPV pressure is 900 psig and rising very slowly with the Main Steam Line Drains open. SBLC was not injected.

(1) Is the reactor considered SHUTDOWN UNDER ALL CONDITIONS WITHOUT BORON?
AND
(2) How is the ATWS EOP used in this situation?

A. (1) NO
(2) Exit only the /Q leg of the ATWS EOP.

B. (1) YES
(2) Exit only the /Q leg of the ATWS EOP.

C. (1) NO
(2) Exit the ATWS EOP and perform IPOI 5.

D. (1) YES
(2) Exit the ATWS EOP and perform IPOI 5.

Answer: A

Answer Explanation:
ATWS EOP, rev 21
BASES - ATWS rev 17
Answer - Per ATWS EOP Bases Discussion Page 4, "Shutdown under ALL conditions without boron" can be determined by relying on the Technical Specification demonstration of adequate shutdown margin:
- One control rod is out beyond position 00
- All other control rods are at position 00
For other combinations of rod patterns and boron concentration, reactor engineering will need to perform a shutdown margin calculation.
When either of the conditions identified in the Continuous Recheck Statement is achieved, it is appropriate to terminate boron injection, exit the ATWS EOP, and enter EOP 1 for control of the transient.
Since these conditions are not given, the EOP may NOT be exited.

BASES, p. 79:
If the reactor is shutdown (subcritical, power below the POAH) without boron injected into the RPV, exit to the scram procedure is appropriate even though the margin to criticality may be

small. Remaining in the power path under these shutdown conditions could lead to unnecessary actions such as tripping both recirculation pumps or injecting boron which might complicate recovery actions. Note that operators will continue to implement guidance in the level and pressure control paths until it has been determined that the reactor will remain shutdown under all conditions.
Correct: A
Plausible DIstractors:
B: Incorrect - The conditions stated in the question stem do not meet the EOP Bases definition of Shutdown under ALL conditions without boron"
C:Incorrect - Only the q leg of the ATWS EOP may be exited. The entire EOP may not be exited until it is determined that you are shutdown under all conditions
D: Incorrect - The conditions stated in the question stem do not meet the EOP Bases definition of Shutdown under ALL conditions without boron". The entire EOP would exited if that were the case.

QUESTION # 088

Given the following plant conditions:

- Reactor Power was 26% as sensed by turbine 1st stage pressure.
- While performing Main Turbine Stop valve testing, an operator inadvertently closed Turbine Stop valve "1" while Turbine Stop valve "2" was full closed.

Which one of the following describes the response of the Reactor Protection System and correct operator response to this event?

a. A half scram signal on RPS A is generated. Enter and direct the actions of ARP 1C05 A-2, "A" RPS AUTO SCRAM.

b. Neither a full nor a half scram is generated because the scram signal is bypassed. No procedure entry is required.

c. A full reactor scram is generated because two of four turbine stop valves are fully closed. Enter and execute the actions of EOP 1 and IPOI 5 (Reactor Scram).

d. A half scram signal on RPS A is generated. Enter and execute the steps of IPOI-5.

ANSWER:
a.
REFERENCE:
ARP 1C05 A-2
IPOI-5
EOP-1
MODIFIED: Clinton Power Station 1999 NRC Exam
HIGHER
K/A # 212000.A2.15: Ability to (a) predict the impacts of the following on the REACTOR PROTECTION SYSTEM ; and (b) based on those predictions, use procedures to correct, control, or mitigate the consequences of those abnormal conditions or operations: Load rejection.
EXPLANATION:
a. Correct: Power is high enough to cause RPS channels to trip, but not RPS B. Only the ARP is required to be entered.
b. Incorrect. RPS A will trip.
c. Incorrect. Only RPS A will trip.
d. Incorrect. Wrong procedure.

QUESTION # 089

Given the following:

- The Reactor Mode Switch is in the "Startup/Hot Standby Position"
- The table below contains a summary of Local Power Range Monitor (LPRM) instrumentation. Instruments that are shown bolded with a strikethrough are currently BYPASSED (note: Average Power Range Monitor is abbreviated as APRM).

	APRM-A	APRM-B	APRM-C	APRM-D	APRM-E	LPRM-B	APRM-F	LPRM-A
Level A	3A-32-33 4A-16-17	2A-08-33 4A-24-17	3A-24-25 4A-08-09	1A-16-41 4A-32-25 5A-16-09	**~~2A-16-33~~** 5A-32-17	**~~3A-16-25~~** 6A-32-09	3A-24-33 4A-08-17 5A-40-17	1A-24-41 2A-08-25 3A-40-25 **~~4A-24-09~~**
Level B	1B-24-41 2B-08-25 3B-40-25 4B-24-09	3B-16-25 6B-32-09	3B-32-33 4B-16-17	2B-08-33 4B-24-17	3B-24-25 4B-08-09	**~~3B-24-33~~** 4B-08-17 5B-40-17	1B-16-41 4B-32-25 5B-16-09	**~~2B-16-33~~** 5B-32-17
Level C	2C-16-33 5C-32-17	3C-24-33 4C-08-17 5C-40-17	1C-24-41 2C-08-25 3C-40-25 4C-24-09	3C-16-25 6C-32-09	**~~3C-32-33~~** 4C-16-17	**~~1C-16-41~~** **~~4C-32-25~~** 5C-16-09	2C-08-33 4C-24-17	**~~3C-24-25~~** 4C-08-09
Level D	3D-24-25 4D-08-09	1D-16-41 4D-32-25 5D-16-09	2D-16-33 5D-32-17	3D-24-33 4D-08-17 5D-40-17	**~~1D-24-41~~** **~~2D-08-25~~** 3D-40-25 4D-24-09	2D-08-33 4D-24-17	3D-16-25 6D-32-09	3D-32-33 4D-16-17
	"A" RPS	"B" RPS	"A" RPS	"B" RPS	"A" RPS	"A" RPS	"B" RPS	"B" RPS

Which ONE of the following correctly describes the status of APRM "E", AND whether the channel is currently required per Technical Specification (TS) 3.3.1.1, Reactor Protection System Instrumentation?

a. OPERABLE; NOT currently required by TS 3.3.1.1.

b. OPERABLE; currently required by TS 3.3.1.1.

c. INOPERABLE; NOT currently required by TS 3.3.1.1.

d. INOPERABLE; currently required by TS 3.3.1.1.

ANSWER:
d.

REFERENCE:
DAEC TS 3.3.1.1, Amendment 223
DAEC TS Bases 3.3.1.1, Amendment 223
OI 878.4, Average Power Range Monitoring System, Revision 40

Proposed References to be provided to applicants during examination: None

NEW
HIGHER

K/A#: Generic K/A 2.2.40: Ability to apply Technical Specifications for a system. Associated system: 215005 (APRM / LPRM).

EXPLANATION:

a. Incorrect: the APRM is inoperable because it has fewer than 13 LPRM inputs (APRM 'E' shares LPRM inputs with LPRM 'B') (DAEC TS Bases 3.3.1.1 Item 2.d and OI-878.4 pages 3 - 4). ITS 3.3.1.1 Item 2.d applies in Modes 1 and 2; the stem conditions indicate that the plant is in Mode 2 (DAEC TS 3.3.1.1).
b. Incorrect: the APRM is inoperable because it has fewer than 13 LPRM inputs (APRM 'E' shares LPRM inputs with LPRM 'B') (DAEC TS Bases 3.3.1.1 Item 2.d and OI-878.4 pages 3 - 4).
c. Incorrect: ITS 3.3.1.1 Item 2.d applies in Modes 1 and 2; the stem conditions indicate that the plant is in Mode 2 (DAEC TS 3.3.1.1).
d. Correct.

Comments: SRO-only question justification is the link to 10CFR55.43(b)(2) "Facility operating limitations in the Technical Specifications and their bases."

Specifically, in reference to the "Clarification Guidance for SRO-only Questions", this question covers "Knowledge of TS bases that is required to analyze TS required actions and terminology."

QUESTION # 090

Given the following:

- All control rods are fully inserted.
- High Pressure Core Injection (HPCI) suction swapped to the Torus.
- HPCI and Reactor Core Isolation Cooling (RCIC) tripped on high Reactor Pressure Vessel (RPV) level.
- RPV level is 195 inches and lowering.
- RPV pressure is 1060 psig and slowly rising.
- Drywell pressure is 1.5 psig.
- RCIC Equipment Room temperature is currently 150°F.

Based upon the conditions above, which Emergency Operating Procedure Defeat is needed to allow RCIC to be used for control of RPV pressure?

a. DEFEAT 1, RCIC LOW RPV PRESSURE ISOLATION AND 211 INCHES DEFEAT

b. DEFEAT 2, HPCI HIGH TORUS WATER LEVEL TRANSFER DEFEAT

c. DEFEAT 8, RCIC STEAM LINE ISOLATION DEFEAT

d. DEFEAT 18, HPCI/RCIC AREA HIGH TEMP ISOLATION DEFEAT

ANSWER:
b.

REFERENCES:
Bases EOP-1, Revision 16
EOP 1, RPV Control, Revision 18
EOP Defeat 2, HPCI High Torus Water Level Transfer Defeat, Revision 3
ARP 1C04C, Revision 44

Proposed References to be provided to applicants during examination: None

DIRECT FROM BANK (DAEC)
HIGHER

K/A# 217000.A2.01: Ability to (a) predict the impacts of the following on the REACTOR CORE ISOLATION COOLING SYSTEM (RCIC); and (b) based on those predictions, use procedures to correct, control, or mitigate the consequences of those abnormal conditions or operations: System initiation signal.

EXPLANATION:

a. Incorrect: The purpose of Defeat 1 is to permit RCIC Steam Isolation valves to be opened, or to remain open, when RPV Pressure is 50 psig or less and to remove the 211" RCIC shutdown signal from the RCIC Turbine Steam Supply Valve. Defeat 1 is authorized for an alternate depressurization system utilized in Emergency Depressurization.
b. Correct. For RPV pressure control purposes, bypassing the HPCI high torus water suction swap with Defeat 2 allows RCIC to be used in the CST- to-CST lineup, since redundant shutoff valve MO-2316 will remain open (Bases EOP-1 pages 56 – 63).

c. Incorrect: The purpose of Defeat 8 is to permit the use of the RCIC turbine in order to depressurize the RPV under non-line break conditions. The RPV High Water Level, RPV Low Steam Line Pressure, and High Ambient/Differential Temperature RCIC isolation signals are blocked with this Defeat. Defeat 8 is authorized for an alternate depressurization system utilized in Emergency Depressurization.
d. Incorrect: The RCIC Equipment room ambient temperature high isolation signal would not be present until 175F. 150F corresponds to the Suppression Pool Ambient Air temperature high setpoint (ARP 1C04C A-7)

Comments: SRO-only question justification is the link to 10CFR55.43(b)(5) "Assessment of facility conditions and selection of appropriate procedures during normal, abnormal, and emergency situations."

Specifically, in reference to the "Clarification Guidance for SRO-only Questions", this question covers "Knowledge of diagnostic steps and decision points in the EOPs that involve transitions to event specific sub-procedures or emergency contingency procedures."

DAEC Original Bank Question

* All control rods are fully inserted
* HPCI suction swapped to the Torus
* HPCI and RCIC tripped on high RPV level
* RPV level is 195 inches and lowering
* RPV pressure is 1060 psig and slowly rising
* Drywell pressure is 1.5 psig

Per the Emergency Operating Procedures, which EOP Defeat is needed to allow RCIC to be used for control of RPV pressure?

A. Defeat 1, RCIC Low RPV Pressure Isolation and 211 inches Defeat

B. Defeat 2, HPCI High Torus Water Level Transfer Defeat

C. Defeat 8, RCIC Steam Line Isolation Defeat

D. Defeat 18, HPCI/RCIC Area High Temp Isolation Defeat

Answer: B

QUESTION # 091

Given the following:

- The plant is in a refueling outage.
- The Fuel Handling Supervisor is checking prerequisites to commence fuel movement in accordance with IPO-8, OUTAGE AND REFUELING OPERATIONS, and RFP-403, PERFORMANCE OF FUEL HANDLING ACTIVITIES.
- During the preceding plant shutdown, all rods were inserted on May 1, 2015 at time 0000.
- The outage schedule plans on having the core completely moved to the Fuel Pool by May 6, 2015 at time 0500.
- Fuel Pool water level is currently 36 feet, 11 inches.

- It is CURRENTLY May 3, 2015 at 0700.

Which, if any, of the current conditions are not acceptable for fuel movement operations?

a. Conditions of time since shutdown, core movement rate, and Fuel Pool level are acceptable.

b. The fuel pool water level is too low to meet surveillance requirements.

c. The time since shutdown is too short to allow fuel movement at this time.

d. The scheduled rate of fuel movement is greater than the allowed rate.

ANSWER:
c.

REFERENCE:
IPO-8, Outage and Refueling Operations, Revision 82
RFP-403, Performance of Fuel Handling Activities, Revision 54
DAEC Technical Specification 3.7.8, Amendment 280 and TS Bases 3.7.8
DAEC Technical Specification 3.9.6, Amendment 280 and TS Bases 3.9.6
SD-435, Fuel Pool and Fuel Pool Cooling and Cleanup System, Revision 8

Proposed References to be provided to applicants during examination: None

NEW

HIGHER

K/A#: Generic K/A 2.1.32: Ability to explain and apply system limits and precautions.
Associated topic: 234000 (Fuel Handling Equipment).

EXPLANATION:

a. Incorrect: the time since the reactor has been shut down (defined as all rods full in) is required to be greater than 60 hours from the start of core alterations (RFP-403 page 6, TS

Bases 3.9.6). Based upon the conditions in the stem, the current time since all rods were inserted is only 55 hours.

b. Incorrect: whenever irradiated fuel is moved in the Spent Fuel Pool, pool level shall be maintained above 36 feet (RFP-403 page 6, TS 3.7.8). The level provided in the stem is however below the Fuel Pool low level setpoint of 37 feet, 1 inch (SD-435 pages 13-14).
c. Correct: the time since the reactor has been shut down (defined as all rods full in) is required to be greater than 60 hours from the start of core alterations (RFP-403 page 6, TS Bases 3.9.6). Based upon the conditions in the stem, the current time since all rods were inserted is only 55 hours.
d. Incorrect: RFP-403 states that "the rate of discharge to the Spent Fuel Pool shall not exceed a rate that would result in the entire core being discharged within 121.33 hours after shutdown. The rate of transfer during a core shuffle is not restricted because the entire core decay heat load will not be deposited into the Spent Fuel Pool" (RFP-403 page 6). Based upon the conditions in the stem, fuel movement is scheduled to finish at the 125 hour point, which is acceptable.

Comments: SRO-only question justification is the link to 10CFR55.43(b)(7) "Fuel handling facilities and procedures."

Specifically, in reference to the "Clarification Guidance for SRO-only Questions", this question covers "Assessment of surveillance requirements for the refueling mode."

QUESTION # 092

With the plant operating at 100% power, the pressure sensing line to Steam Throttle Pressure "A" transmitter ruptures resulting in 0 psig input to Pressure Regulator Channel "A."

Which of the following will result from this failure, and what actions are required?

a. Reactor Pressure RISES 5 psig. It is required to enter AOP-262, Loss of Reactor Pressure Control and verify Core Thermal Limits.

b. Reactor Pressure LOWERS 5 psig. It is required to enter AOP-262, Loss of Reactor Pressure Control and verify Core Thermal Limits.

c. Reactor Pressure RISES, resulting in a Reactor Scram. It is required to enter EOP-1, RPV Control and verify all that control rods are inserted.

d. Reactor Pressure LOWERS, resulting in a Group 1 Isolation and a Reactor Scram. It is required to enter EOP-1, RPV Control and verify that all control rods are inserted.

ANSWER:
b.

REFERENCE:
AOP-262, LOSS OF REACTOR PRESSURE CONTROL, Revision 7
Objective Link: 52.01.01.02

Proposed References to be provided to applicants during examination: None

BANK – 2007 NRC Exam (SRO Question 92)

HIGHER

K/A # A2.16: Ability to (a) predict the impacts of the following on the REACTOR/TURBINE PRESSURE REGULATING SYSTEM ; and (b) based on those predictions, use procedures to correct, control, or mitigate the consequences of those abnormal conditions or operations: Low turbine inlet pressure (loss of pressure signal) 55.43(b)5

EXPLANATION:
a. Incorrect: Identifies a misconception that bias channel results in 5 psig decrease.

b. <u>Correct</u>: Reactor Pressure will RISE 5 psig. It is required to enter AOP-262 and verify Core Thermal Limits. With 0 psig input, a summer output goes to a large negative value, the HVG swaps over to the B regulator, which controls 5 psig lower due to the bias signal.

c. Incorrect: This would be true if both A <u>and</u> B sensing taps ruptured.

d. Incorrect: This would be true if either Pressure Regulator output failed HIGH.

QUESTION # 093

Given the following:

- The plant is operating at 30% power with a shutdown in progress.
- The shutdown is being conducted to support a Drywell entry to find the cause of increased leakage.
- Operators were about to commence an air purge (de-inerting) of the containment when both Offgas Stack Radiation Monitors, RM-4116A and B, were declared inoperable due to a failed surveillance test
- KAMAN 9 and 10, Offgas Stack KAMAN monitors, remain in-service and operable

Which of the following is true regarding the operators' ability to de-inert under these conditions?

De-inerting may…

a. NOT BEGIN because containment venting in this situation would be an unmonitored release.

b. BEGIN because the Offgas KAMANs being operable satisfy ODAM and Technical Specification requirements for a release.

c. NOT BEGIN because a Group 3 isolation caused by RM-4116A and B inoperability would NOT allow containment venting.

d. BEGIN as long as appropriate administrative controls are being maintained on the containment vent and purge valves while they are open.

ANSWER:
d.

REFERENCE:
ARP 1C03A, Revision 53
DAEC TS 3.3.6.1, Primary Containment Isolation Instrumentation, Amendment 223

Proposed References to be provided to applicants during examination: DAEC Technical Specification 3.3.6.1 (including Table 3.3.6.1-1)

BANK (DAEC - **2011** NRC Exam)

HIGHER

K/A#: Generic K/A 2.2.42: Ability to recognize system parameters that are entry-level conditions for Technical Specifications. Associated topic: 271000 (Offgas).

EXPLANATION:

a. Incorrect: the ARP states RM-4116A&B are required in modes 1, 2, and 3 (during venting and purging of the Primary Containment. However T.S. Section 3.3.6.1.L.2 permits the use of alternate instrumentation.

b. Incorrect: Offgas KAMANs do not satisfy TS 3.3.6.1. They are part of TRM 3.3.3 instrumentation.
c. Incorrect: Offgas Stack Radiation Monitors, RM-4116A&B becoming inoperable do NOT cause a Group 3 isolation. Offgas Vent Pipe Radiation Monitors, RM-4116A&B Hi HI will cause a Group 3 isolation but the downscale/inoperative does NOT.
d. Correct: RM-4116A&B are required in modes 1, 2, and 3 (during venting and purging of the Primary Containment. However T.S. Section 3.3.6.1.L.2 permits establishing administrative control of the primary containment vent and purge valves using continuous monitoring of alternate instrumentation.

Comments: SRO-only question justification is the link to 10CFR55.43(b)(2) "Facility operating limitations in the Technical Specifications and their bases."

Specifically, in reference to the "Clarification Guidance for SRO-only Questions", this question covers "Application of Required Actions (Section 3) and Surveillance Requirements (Section 4) in accordance with rules of application requirements (Section 1)".

ORIGINAL DAEC BANK QUESTION

2011 NRC Exam, PDA 13-1 (Supervise Plant Operations)

DAEC is operating at 30% power with the following conditions:
☐ Plant is being shutdown for a Drywell entry to find the cause of increased floor drain leakage
☐ Operators were about to commence an air purge (de-inerting) of the containment when both Offgas
Stack Radiation Monitors, RM-4116A&B, were declared inoperable due to a failed surveillance test
☐ KAMAN 9 and 10, Offgas Stack KAMAN monitors, remain in-service and operable

Which one of the following is correct regarding the operators' ability to de-inert while RM 4116A&B are not operable?

De-inerting may

A. NOT begin because containment venting in this situation would be an unmonitored release.

B. NOT begin because a Group 3 isolation caused by RM-4116A&B inoperability would NOT allow containment venting.

C. begin because the Offgas KAMANs being operable satisfy ODAM and Technical Specification requirements for a release.

D. begin as long as appropriate administrative controls are being maintained on the containment vent and purge valves while they are open.
Answer: D

Answer Explanation:
PROVIDE T.S. 3.3.6.1 including Table 3.3.6.1-1 WITH THIS QUESTION
1C03A rev 50, A-4 & C-4
T.S. 3.3.6.1
Correct - RM-4116A&B are required in modes 1, 2, and 3 (during venting and purging of the Primary Containment. However T.S. Section 3.3.6.1.L.2 permits establishing administrative control of the primary containment vent and purge valves using continuous monitoring of alternate instrumentation.
Answer: D

Distractors:
A. Incorrect - Although the ARP states RM-4116A&B are required in modes 1, 2, and 3 (during venting and purging of the Primary Containment. However T.S. Section 3.3.6.1.L.2 permits the use of alternate instrumentation.
B. Incorrect - Offgas Stack Radiation Monitors, RM-4116A&B becoming inoperable do NOT cause a Group 3 isolation. Offgas Vent Pipe Radiation Monitors, RM-4116A&B Hi HI will cause a Group 3 isolation but the downscale/inoperative does NOT.
C. Incorrect - Offgas Stack Radiation Monitors, RM-4116A&B becoming inoperable do NOT cause a Group3 isolation. Offgas Vent Pipe Radiation Monitors, RM-4116A&B Hi HI will cause a Group 3 isolation but the downscale/inoperative does NOT.

QUESTION # 094

Given the following:

- The plant is in a refueling outage.
- Preparations are being made to move fuel from the fuel pool back to the reactor vessel.
- The Fuel Handling Supervisor is reviewing prerequisites for core reload in accordance with RFP-403, Performance of Fuel Handling Activities.
- It has been identified that a change must be made to the approved Fuel Moving Plan (FMP).
- Calculations have identified that the change WILL affect Shutdown Margin.

Based upon the conditions above, which of the following describes how the required change to the FMP will be made?

a. Made on the current FMP with Reactor Engineer approval.

b. Made on the current FMP with Fuel Handling Supervisor approval.

c. Made on the current FMP with Shift Manager approval.

d. Made only by fully revising the FMP.

ANSWER:
d.

REFERENCE:
RFP-403, Performance of Fuel Handling Activities, Revision 54

Proposed References to be provided to applicants during examination: None

NEW
FUNDAMENTAL

K/A#: Generic K/A 2.1.36: Knowledge of procedures and limitations involved in core alterations.

EXPLANATION:

a. Incorrect: Minor pen & ink changes to the FMP may be made by Reactor Engineering with concurrence from the Fuel Handling Supervisor, **Reactor Engineer**, and the Shift Manager. Minor pen and ink changes are defined as any change that **does not affect the Shutdown Margin** as determined by the Reactor Engineering group (RFP-403 page 13).
b. Incorrect: Minor pen & ink changes to the FMP may be made by Reactor Engineering with concurrence from the **Fuel Handling Supervisor**, Reactor Engineer, and the Shift Manager. Minor pen and ink changes are defined as any change that **does not affect the Shutdown Margin** as determined by the Reactor Engineering group (RFP-403 page 13).
c. Incorrect: Minor pen & ink changes to the FMP may be made by Reactor Engineering with concurrence from the Fuel Handling Supervisor, Reactor Engineer, and the **Shift Manager**. Minor pen and ink changes are defined as any change that **does not affect the Shutdown Margin** as determined by the Reactor Engineering group.

d. Correct: Any changes to the FMP that have the potential to affect the Shutdown Margin (SDM) as calculated by the Reactor Engineering Department will require a full revision to the FMP per REDP3, Core Alteration, and REDI 003, Creation of an Item Control Area (ICA) Transfer Report (RFP-403 page 13).

Comments: SRO-only question justification is the link to 10CFR55.43(b)(6) "Procedures and limitations involved in initial core loading, alterations in core configuration, control rod programming, and determination of various internal and external effects on core reactivity."

Specifically, in reference to the "Clarification Guidance for SRO-only Questions", this question covers "Administrative requirements associated with refueling activities, such as approvals required to amend core loading sheets or administrative controls of potential dilution paths and/or activities".

QUESTION # 095

Given the following conditions:

- A loss of RPV level occurred due to a LOCA.
- EOP-1 was entered.
- RPV water level is now +15 inches with 1 “Preferred” injection system lined up and dropping at 1 inch per minute.

Which of the following actions is required at this time?

a. Align all available Alternate Injection Systems.

b. Align additional Preferred Injection Systems.

c. Delay Blowdown as long as possible.

d. Initiate Blowdown when MSCRWL (-25 in.) is exceeded.

ANSWER:
c.

REFERENCE:
EOP 1 - RPV CONTROL Basis, Rev. 16

Proposed References to be provided to applicants during examination: None

NEW

FUNDAMENTAL

K/A # G2.1.20: Ability to interpret and execute procedure steps. CFR: 41.10 / 43.5

EXPLANATION:
a. Incorrect: This is required only if NO Injection Subsystem is available (RC/L-5 &6).
b. Incorrect: Efforts to align Preferred Injection Systems should continue at least until RPV water level drops to +15 in.
c. Correct: If it is believed that available injection systems may not be capable of restoring and maintaining RPV water level above the Minimum Steam Cooling RPV Water Level (MSCRWL) following RPV depressurization, the blowdown should be delayed as long as possible.
d. Incorrect: Blowdown must be performed BEFORE MSCRWL is exceeded.

QUESTION # 096

Given the following:

- The plant was operating at 100% when a fuel leak resulted in high Offgas and Main Steam Line Radiation Levels.
- AOP 672.2, Offgas Radiation/Reactor Coolant High Activity, has been entered and a plant shutdown is being performed to comply with Technical Specifications.
- A spurious Main Turbine trip subsequently occurred and the plant automatically scrammed.
- Current plant conditions are as follows:
    - ALL Control Rods are fully inserted.
    - Reactor level lowered to 160" following the scram and is now stable at 184".
    - Reactor Pressure is 920 psig with the Turbine Bypass Valves in service.
    - Offgas is in service, maintaining 2 inches Hg Backpressure.
    - 1C05B C-2 MAIN STEAM LINE HI HI RAD / INOP TRIP continues to alarm.

Based upon these conditions, which one of the following sets of actions is required AND will MINIMIZE release of radioactivity to the environment?

a. Enter EOP 1, RPV Control AND EOP 4, Rad Release Control.
Rapidly cooldown at GREATER THAN 100ºF/hr by depressurizing to the Main Condenser to allow the Offgas treatment process to limit radioactivity releases.

b. Enter EOP 1, RPV Control AND EOP 4, Rad Release Control.
Rapidly cooldown at GREATER THAN 100ºF/hr by depressurizing to the Torus to allow the Containment to limit radioactivity release and allow the Main Condenser to be used to control MSIV Leakage.

c. Enter EOP 1, RPV Control AND maintain RPV level 170" to 211". No additional EOP entries are required at this time.
Cooldown at LESS THAN 100ºF/hr by depressurizing to the Main Condenser to allow the Offgas treatment process to limit radioactivity releases.

d. Enter EOP 1, RPV Control AND maintain RPV level 170" to 211". No additional EOP entries are required at this time.
Cooldown at LESS THAN 100ºF/hr by depressurizing to the Torus to allow the Containment to limit radioactivity release and allow the Main Condenser to be used to control MSIV Leakage.

ANSWER:
d.

REFERENCE:
AOP-672.2, Offgas Radiation/Reactor Coolant High Activity, Revision 37
EOP-1, RPV Control, Revision 18

Proposed References to be provided to applicants during examination: None

DIRECT FROM BANK
(DAEC 2009 NRC Exam, refer to “Direct Crew Actions for Emergency Operating Conditions”)
HIGHER

K/A#: Generic K/A 2.2.44: Ability to interpret control room indications to verify the status and operation of a system, and understand how operator actions and directives affect plant and system conditions.

EXPLANATION:

a. Incorrect: action would be correct if Emergency Depressurization were anticipated during EOP execution. No reasons are provided in stem for ED.
b. Incorrect: action would be correct if Emergency Depressurization were required and if EOP-4 Radioactivity Release Control, were entered. No entry conditions for these are given in stem.
c. Incorrect: action would be correct for a normal shutdown without High RCS Activity concerns.
d. Correct: AOP 672.2, Off Gas Radiation, Reactor Coolant High Activity specifies closing the MSIVs and MSL Drains, depressurizing to the Torus. Main Steam and Main Condenser will be aligned to limit MSIV Leakage. No requirement has been given to Anticipate Emergency Depressurization, so normal cooldown limits are in effect. EOP -1 entry required on low RPV level, IPOI 5 entry not required because the scram already occurred (EOP 1 Decision Step RC-2) No other EOP entries exist.

Comments: SRO-only question justification is the link to 10CFR55.43(b)(4) "Radiation hazards that may arise during normal and abnormal situations, including maintenance activities and various contamination conditions."

Specifically, in reference to the "Clarification Guidance for SRO-only Questions", this question covers "Analysis and interpretation of radiation and activity readings as they pertain to selection of administrative, normal, abnormal, and emergency procedures."

DAEC ORIGINAL BANK QUESTION

The plant was initially operating at full power. A fuel leak resulted in high Offgas and Main Steam Line Radiation Levels.

AOP 672.2, Offgas Radiation/Reactor Coolant High Activity, has been entered and a plant shutdown is being performed to comply with Technical Specifications.

Then, a spurious Main Turbine trip occurred and the plant automatically scrammed. Plant conditions are as follows:

- ☐ ALL Control Rods are fully inserted
- ☐ Reactor level lowered to 160" following the scram and is now stable at 184"
- ☐ Reactor Pressure is 920 psig with the Turbine Bypass Valves in service
- ☐ Offgas is in service, maintaining 2 inches Hg Backpressure
- ☐ 1C05B C-2 MAIN STEAM LINE HI HI RAD / INOP TRIP continues to alarm

With these conditions, which one of the following actions is required and will MINIMIZE release of radioactivity to the environment?

Enter EOP 1, RPV Control, and _____

A. EOP 4, Rad Release Control.
Rapidly cooldown at GREATER THAN 100ºF/hr by depressurizing to the Main Condenser to allow the Offgas treatment process to limit radioactivity releases.

B. EOP 4, Rad Release Control.
Rapidly cooldown at GREATER THAN 100ºF/hr by depressurizing to the Torus to allow the Containment to limit radioactivity release and allow the Main Condenser to be used to control MSIV Leakage.

C. maintain RPV level 170" to 211". No additional EOP entries are required at this time.
Cooldown at LESS THAN 100ºF/hr by depressurizing to the Main Condenser to allow the Offgastreatment process to limit radioactivity releases.

D. maintain RPV level 170" to 211". No additional EOP entries are required at this time.
Cooldown at LESS THAN 100ºF/hr by depressurizing to the Torus to allow the Containment tolimit radioactivity release and allow the Main Condenser to be used to control MSIV Leakage.

Answer: D

Answer Explanation:
Correct: D
Answer - AOP 672.2, Off Gas Radiation, Reactor Coolant High Activity specifies closing the MSIVs and MSL Drains, depressurizing to the Torus. Main Steam and Main Condenser will be aligned to limit MSIV Leakage. NO requirement has been given to Anticipate Emergency Depressurization, so normal cooldown limits are in effect.
EOP -1 entry required on low RPV level, IPOI 5 entry not required because the scram already occurred (EOP 1 Decision Step RC-2) No other EOP entries exist.

Plausible Distractors:

A: Incorrect - Action would be correct if Emergency Depressurization were anticipated during EOP execution. No reasons are provided in stem for ED
B: Incorrect - Action would be correct if Emergency Depressurization were required and if EOP-4 Radioactivity Release Control, were entered. No entry conditions for these are given in stem
C: Incorrect - Action would be correct for a normal shutdown without High RCS Activity concerns.

AOP 672.2 rev 37
EOP 1 rev 18

QUESTION # 097

Given the following:

- The plant is shutdown.
- Average Reactor Coolant Temperature is 213°F and stable.
- It is currently the Christmas Eve night shift.
- The Shift Technical Advisor (STA) just became violently ill and is being transported offsite for medical treatment.
- It is currently one hour and forty-five minutes until watchstander turnover time.

Which of the following describes the required action(s), if any, for this situation?

a. No relief is required per Technical Specifications.

b. The SRO has discretion to decide if current plant operation can continue in a safe manner before a callout is made.

c. Notify the Operations Director and wait for the oncoming watchstanders to arrive to fill the vacant STA position.

d. A callout for a qualified replacement STA must occur immediately to fill the vacant watchstander position.

ANSWER:
d.

REFERENCE:
DAEC TS 5.2.2, Amendment 274
ACP 1410.1, Operations Working Standards, Revision 100

Proposed References to be provided to applicants during examination: None

NEW
HIGHER

K/A#: Generic K/A 2.2.38: Knowledge of conditions and limitations in the facility license.

EXPLANATION:

a. Incorrect: TS 5.2.2.g states that the STA "…function is not required in MODES 4 and 5". The initial condition given is that the plant is in **Mode 3**, and thus the STA is required (TS 5.2.2).
b. Incorrect: Per ACP 1410.1 CRS/OSM discretion that current plant operation can continue in a safe manner and will not be jeopardized applies in determining if an individual can leave site **before** the relief individual arrives. In the situation in this question, the individual has already left (ACP 1410.1 page 13).
c. Incorrect: Notification of the Operations director is required. However, even though a regularly scheduled qualified STA should be arriving before the two hour limit runs out (a time of one hour and forty-five minutes is given in the stem), the requirement of ACP 1410.1

is that an **immediate call out** must be made to satisfy TS 5.2.2 (ACP 1410.1 page 13). TS 5.2.2.c states: "Shift crew composition may be less than the minimum requirement of 10 CFR 50.54(m)(2)(i) and 5.2.2.a and 5.2.2.g for a period of time not to exceed 2 hours in order to accommodate unexpected absence of on-duty shift crew members provided **immediate action** is taken to restore the shift crew composition to within the minimum requirements."

d. Correct: per TS 5.2.2.c initiate a callout to fill the required position immediately. The position must be filled within 2 hours (ACP 1410.1 page 13). TS 5.2.2.c states: "Shift crew composition may be less than the minimum requirement of 10 CFR 50.54(m)(2)(i) and 5.2.2.a and 5.2.2.g for a period of time not to exceed 2 hours in order to accommodate unexpected absence of on-duty shift crew members provided **immediate action** is taken to restore the shift crew composition to within the minimum requirements."

Comments: SRO-only question justification is the link to 10CFR55.43(b)(1) "Conditions and limitations in the facility license."

Specifically, in reference to the "Clarification Guidance for SRO-only Questions", this question covers "The required actions for not meeting administrative controls listed in Technical Specification (TS) Section 5 or 6, depending on the facility (e.g. shift staffing requirements)".

QUESTION # 098

The plant was at full power during day shift. While lowering a crate of highly radioactive material from the 5th floor, the sling broke, and the contents of the crate spilled out on the ground floor of the Reactor Building. No one was injured but the Railroad Access ARM alarmed and read 30 mR/hour. The OSM directed that the following actions to be taken:

- Declared a Notification of Unusual Event HU-5 (Other Conditions Exist Which in the Judgment of the Emergency Director Warrant Declaration of a NOUE), based on OSM judgment.
- Sounded the Evacuation Alarm.
- Made a Plant Page announcement for all personnel to evacuate the Reactor Building.
- Repeated the Evacuation alarm and Plant Page announcement.

Which of the following statements is correct in regard to the OSM's compliance with the Emergency Plan?

a. ALL OSM actions have complied with the Emergency Plan.

b. The entire plant must be evacuated when the Evacuation Alarm is used for an EAL declaration.

c. An Unplanned Rise in Plant Radiation Levels Condition classification must be declared, not an HU-5 based on OSM judgment.

d. The Evacuation Alarm is only used for EAL declarations of ALERT or greater, and may not be used for a Notification of Unusual Event.

ANSWER:
b.

REFERENCE:
EPIP 1.3, PLANT ASSEMBLY AND SITE EVACUATION, Revision 19.

Proposed References to be provided to applicants during examination: None

BANK – 2001 NRC Exam

FUNDAMENTAL

K/A # G2.3.5: Ability to use radiation monitoring systems, such as fixed radiation monitors and alarms, portable survey instruments, personal monitoring equipment, etc. (CFR 41.11/ 41.12/ 43.4)

EXPLANATION:

a. Incorrect: Per EPIP 1.3,in an EAL condition, the entire plant must be evacuated for accountability purposes.
b. CORRECT: Per EPIP 1.3.
c. Incorrect: The only On-site rad condition NUE is RU2 which has entry condition of 1000X normal ARM reading and is not applicable. There is no restriction for using HU5 on rad conditions.
d. Incorrect: Evacuation alarm must be sounded for Alert or greater, but may also be used for general evacuation or NUEs.

QUESTION # 099

Given the following:

- The EOPs have been entered and plant conditions have degraded such that SAG entry is required.
- The TSC is NOT ready to assume control.

Which of the following is correct?

The operating crew should …

a. continue implementing the current EOP actions until the TSC is ready to transition to the SAGs.

b. exit the EOP which directs the entry into the SAGs and continue to implement all other EOPs which are entered.

c. exit the EOP leg that is directing the SAG entry and continue to implement all other EOPs legs in effect.

d. enter the SAG that is directed and when the TSC is ready, turnover all actions which were directed from the SAGs entered.

ANSWER:
a.

REFERENCE:
EOP Bases Document -EOP Flow chart use and logic Rev 4 page 43

DAEC Objective Number: 95.74.16.01/95.74.16.02

DAEC Objective Statement: Explain the transition process from EOPs to SAGs/Explain the concept of default actions as it pertains to the actions to take while still in EOPs and waiting to make the transition to SAGs

Proposed References to be provided to applicants during examination: None

BANK – DAEC 2002 NRC Exam

FUNDAMENTAL

K/A # G2.4.16: Knowledge of EOP implementation hierarchy and coordination with other support procedures or guidelines such as, operating procedures, abnormal operating procedures, and severe accident management guidelines. (CFR 41.10/43.5)

K/A Value:4.4

<u>SRO Basis</u>: CFR: 43.5 - Assessment of facility conditions and selection of appropriate procedures during normal, abnormal, and emergency situations.

EXPLANATION:

a. Correct: Until the TSC is ready the operating crew is directed to continue to use the EOP strategies to combat the event.
b. Incorrect: Exiting the EOPs is correct. However, the TSC must be ready to take control and ALL EOPs are exited at that time.
c. Incorrect: Exiting the EOPs is correct. However, the TSC must be ready to take control and ALL EOPs are exited at that time.
d. Incorrect: Entering the SAGs would be correct if the TSC is ready. The crews do not enter the SAGs without the TSC being ready.

QUESTION # 100

Given the following:

- The plant was operating at full power.
- The control room had to be evacuated due to a fire.
- All required control room actions were completed prior to the evacuation.

Which one of the following describes a task that must be completed IAW AOP 915, Shutdown Outside the Control Rooms?

a. Attempting closure of a spuriously opened SRV by transferring control to Remote Shutdown Panel 1C388 ONLY.

b. Attempting closure of a spuriously opened SRV by transferring control to Remote Shutdown Panels 1C388 and 1C389.

c. Establishing additional ventilation in the 1A3 and 1A4 switchgear rooms within 1 hour.

d. Establishing additional ventilation in the 1A3 switchgear room ONLY within 1 hour.

ANSWER:
b.

REFERENCE:
AOP-915, Shutdown Outside Control Room, Revision 53

Proposed References to be provided to applicants during examination: None

BANK (DAEC 2009 NRC Exam)

HIGHER

K/A#: Generic K/A 2.4.35: Knowledge of local auxiliary operator tasks during an emergency and the resultant operational effects. CFR: 41.10 / 43.5 / 45.13

EXPLANATION:
a. Incorrect: IAW AOP 915, transfer of panel 1C389 is also required for SRV control.
b. Correct: IAW AOP 915, per Caution on Page 6, “For Control Room evacuation as the result of a fire, transfer of control at panels 1C388, 1C389, 1C390, 1C391, 1C392 is required to be completed within 20 minutes”.
c. Incorrect: The requirement has no time constraints.
d. Incorrect: The requirement has no time constraints.