Figure 9b.2-1 – TSPS Flow Diagram

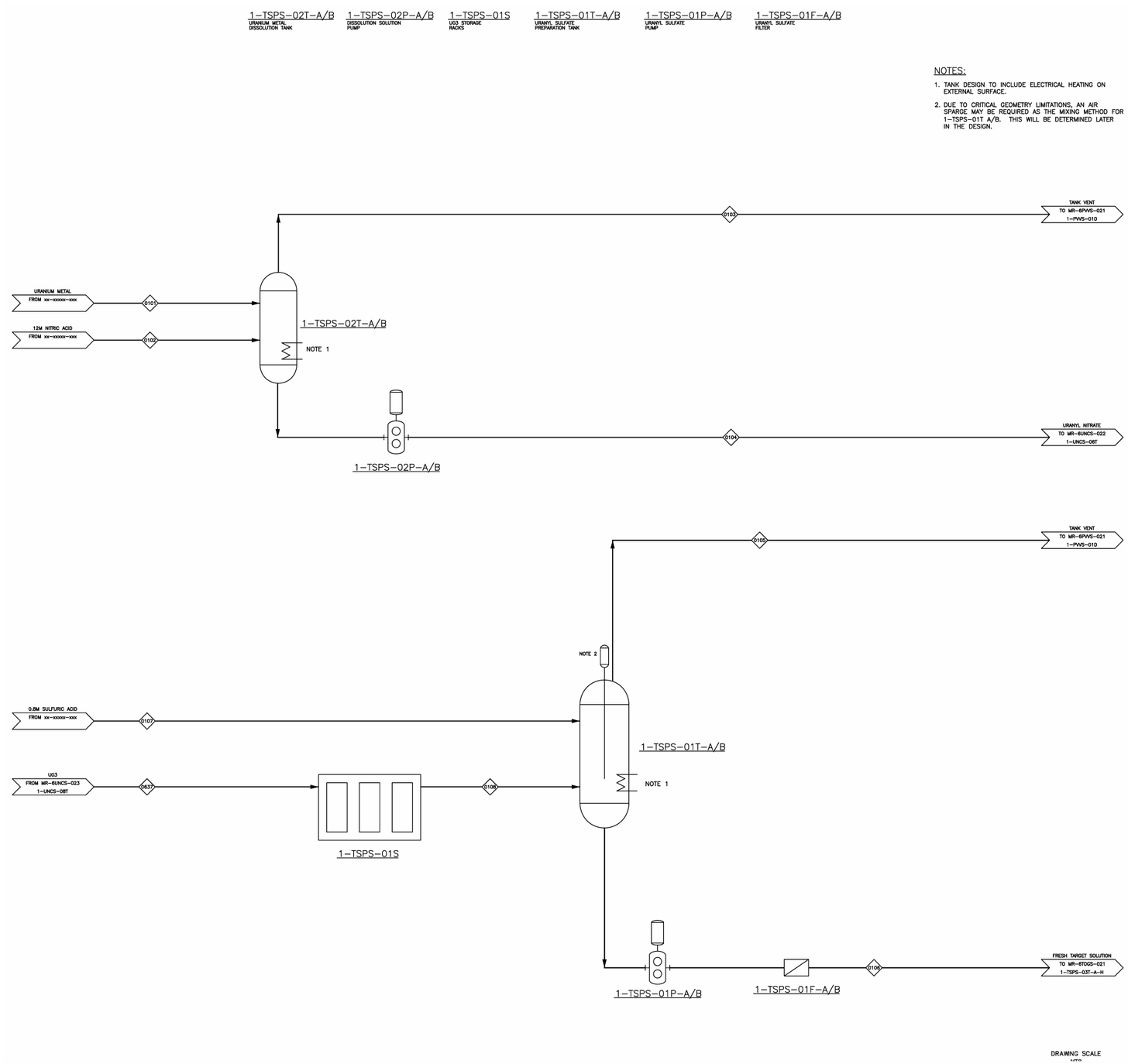

Figure 9b.2-2 – Uranium Oxide/Metal Storage Rack

Proprietary Information – Withhold from public disclosure under 10 CFR 2.390(a)(4)
Security-Related Information – Withhold Under 10 CFR 2.390

Figure 9b.6-1 – Process Vessel Vent System (PVVS) Process Flow Diagram

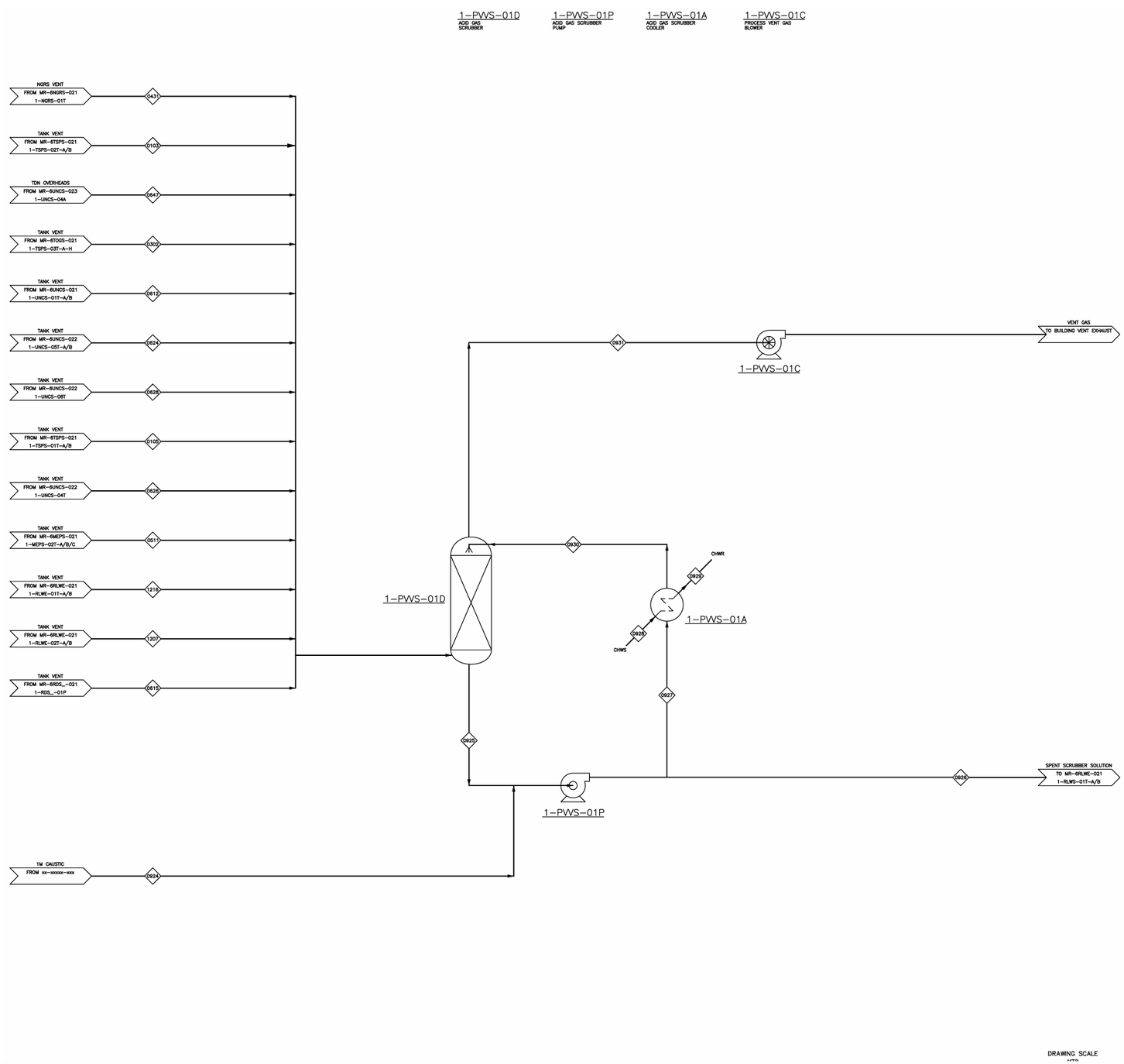

Figure 9b.6-2 – Noble Gas Removal System (NGRS) Process Flow Diagram

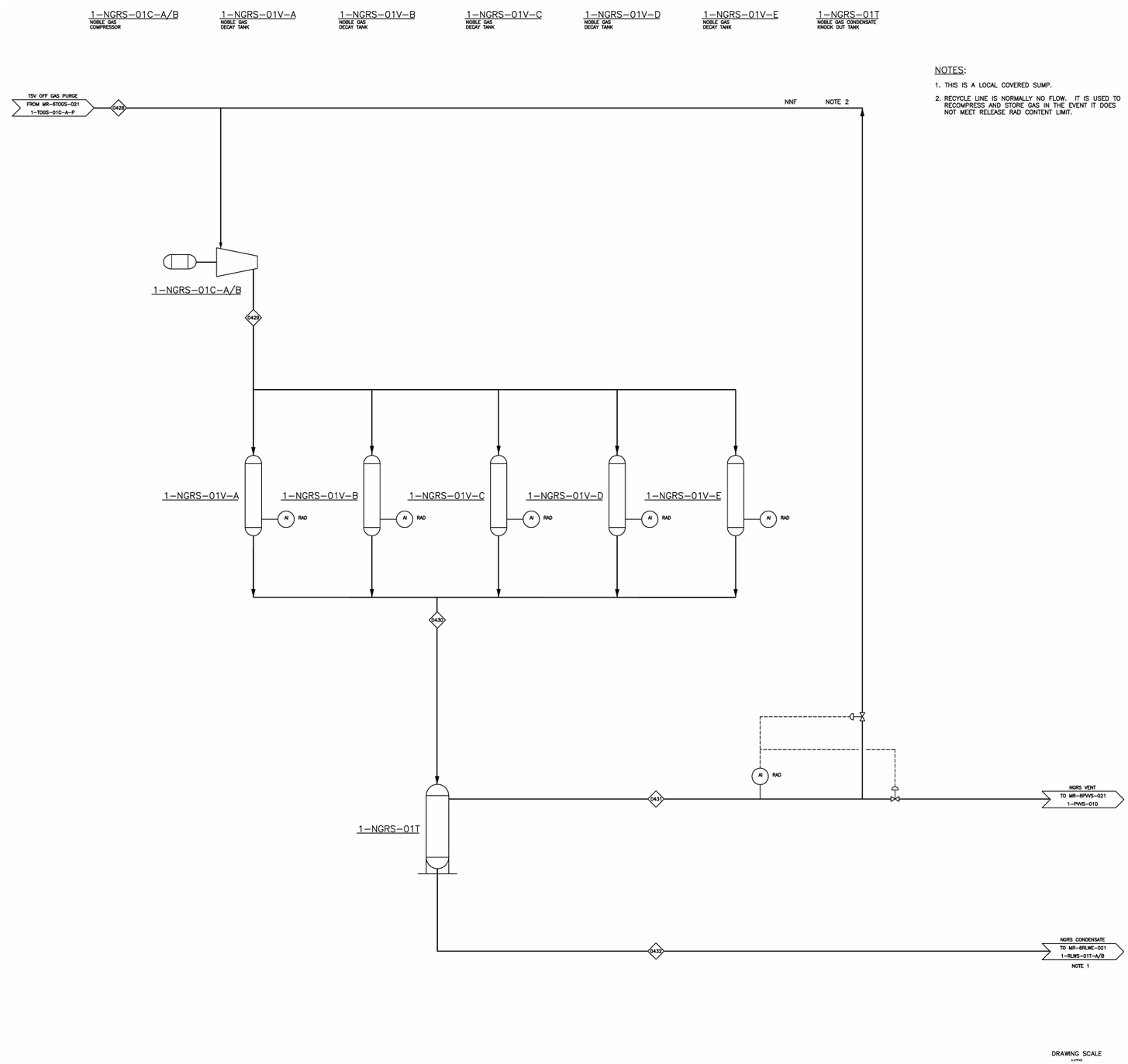

Figure 9b.7-1 – Molybdenum Extraction, Purification, and Packaging GA 1

Proprietary Information – Withhold from public disclosure under 10 CFR 2.390(a)(4)
Security-Related Information – Withhold Under 10 CFR 2.390

Figure 9b.7-2 – Molybdenum Extraction, Purification, and Packaging GA 2

Proprietary Information – Withhold from public disclosure under 10 CFR 2.390(a)(4)
Security-Related Information – Withhold Under 10 CFR 2.390

Figure 9b.7-3 – RCA Overhead Crane Locations and Coverage

Proprietary Information – Withhold from public disclosure under 10 CFR 2.390(a)(4)
Security-Related Information – Withhold Under 10 CFR 2.390

Figure 9b.7-4 – RCA Hot Cell Locations

Proprietary Information – Withhold from public disclosure under 10 CFR 2.390(a)(4)
Security-Related Information – Withhold Under 10 CFR 2.390

Figure 9b.7-5 – RLWE Liquid Waste Evaporator and Storage System Process Flow Diagram

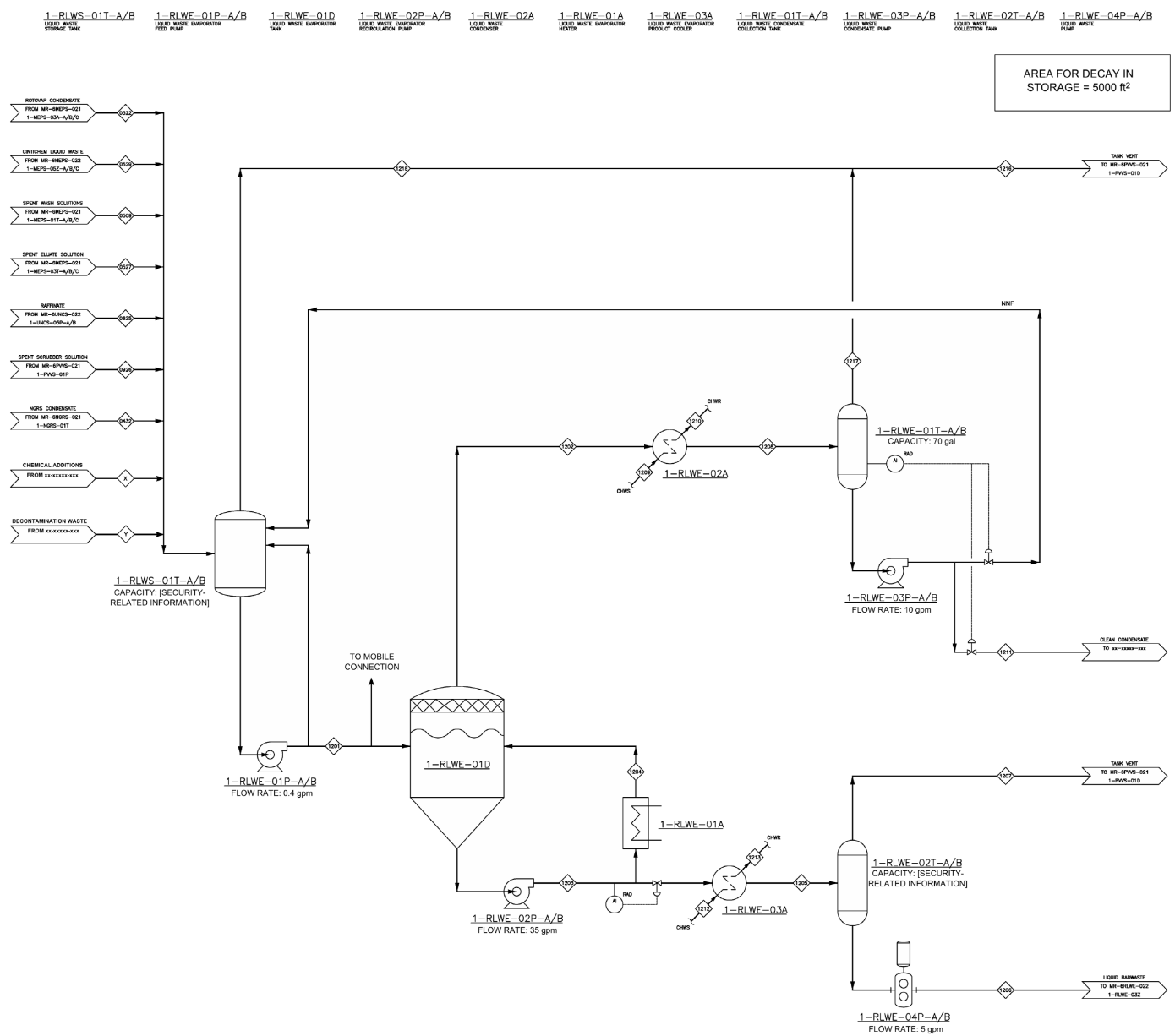

Figure 9b.7-6 – RLWE Liquid Waste Immobilization System Process Flow Diagram

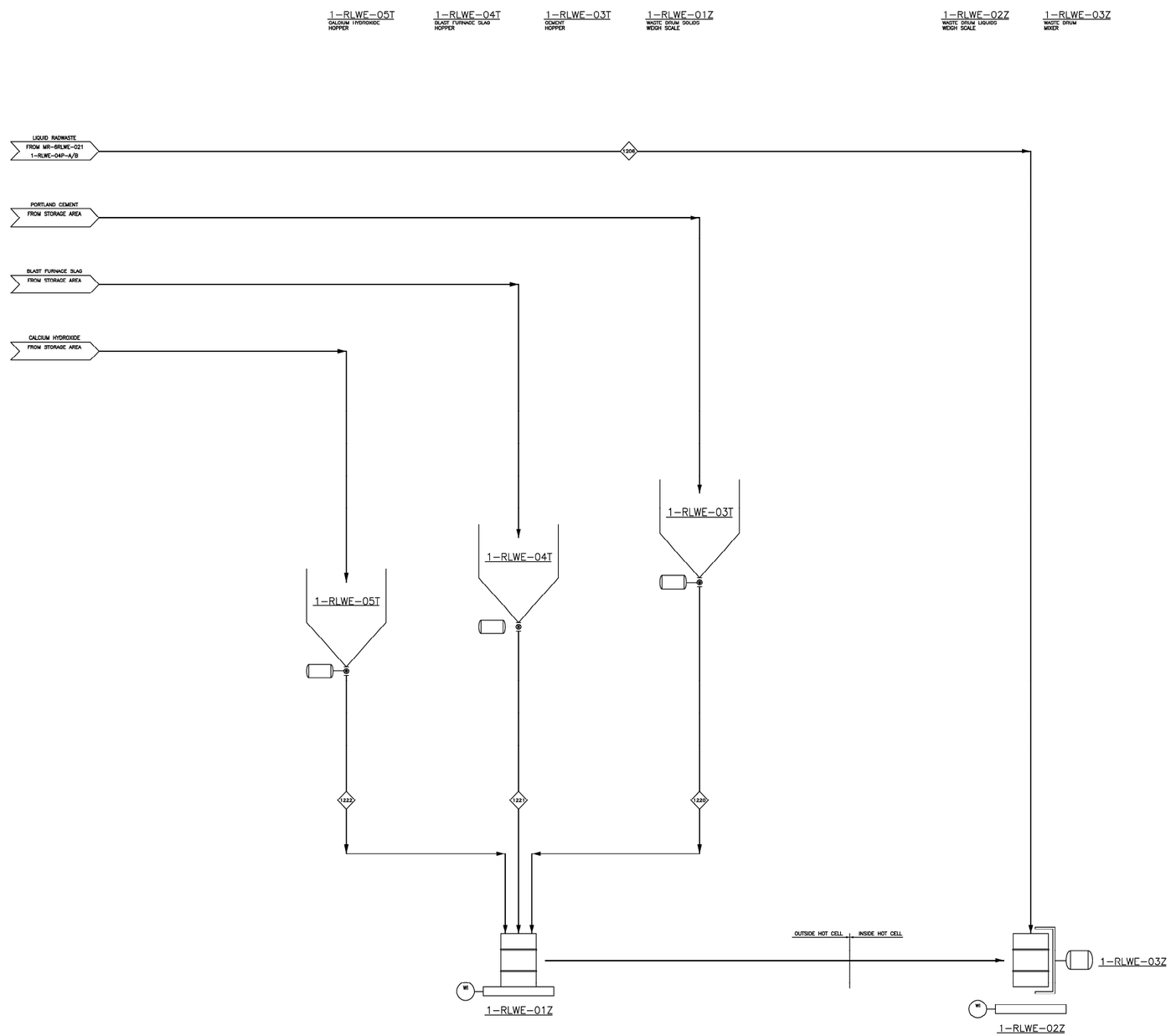

Figure 9b.7-7 – Solid Radioactive Waste Handling Hot Cell Inputs and Outputs

Proprietary Information – Withhold from public disclosure under 10 CFR 2.390(a)(4)

Figure 9b.7-8 – RDS Process Flow Diagram

Proprietary Information – Withhold from public disclosure under 10 CFR 2.390(a)(4)
Security-Related Information – Withhold Under 10 CFR 2.390