INSERVICE INSPECTION REPORT

UNIT 1 OCONEE 1991 REFUELING OUTAGE 13

Location: Hwy 130/183, Seneca, South Carolina 29679
NRC Docket No. 50-269
Commercial Service Date: July 15, 1973

Owner: Duke Power Company
422 S. Church St.
Charlotte, N. C. 28201

Revision 1

Prepared By: A. J. Hogge, Jr. Date 1-21-93

Reviewed By: R. S. Raine Date 1-26-93

Approved By: J. W. Barkour Date 2/4/93

Copy No. 5 Assigned To **NRC Document Control**

Controlled X Uncontrolled _____

EQA383

9303100023 930305
PDR ADOCK 05000269
Q PDR

CONTROLLED DISTRIBUTION

Copy No.	Assigned To
Original	J. O. Barbour
1	R. G. Rouse
2	T. J. Coleman
3	W. D. Minton BWNS-Lynchburg
4	R. L. Gill, Jr. (to Licensing File)
5	NRC Document Control

UNCONTROLLED DISTRIBUTION

6	C. A. Ireland (AIA, Atlanta, GA)

TABLE OF CONTENTS

Section	Title	Revision
1.	Summary of Inservice Inspection	0
2.	Status of Required Inspections	1
3.	Final Inservice Inspection Plan for Outage 13	1
4.	Results of Inspections Performed During Outage 13	1
5.	Class 1 Inspection Results	1
6.	Class 2 Inspection Results	1
7.	Augmented and Alternate Inspection Results	0
8.	Personnel, Equipment, and Material Certifications	1
9.	Problem Investigation Reports	0
10.	Reference Documents	1
11.	Class 1 and 2 Repairs and Replacements	1

1.0 Summary of Inservice Inspection

This report describes the Inservice Inspection of Duke Power Company's Oconee Nuclear Station Unit 1 during the 1991 Refueling Outage (also referred to as Outage 13), which is in the Third Inspection Period of the Second Ten Year Interval.

Included in this report are the final Inservice Inspection Plan, the inspection results for each item, a summary for each category of examination and corrective action taken when unacceptable conditions were found. In addition, there is a section included for repairs and replacements required since June 4, 1990.

1.1 Class 1 Inspection

The Class 1 Inservice Inspection included examinations on the Reactor Vessel Circumferential and Longitudinal Shell Welds, Circumferential Head Welds and Shell to Flange Weld, Nozzle to Vessel Welds, and Inside Radius Sections, CRDM Nozzle to Vessel Welds, Incore Instrumentation Nozzle to Head Welds, Nozzle to Safe End Butt Welds and on Reactor Vessel Nuts and Studs. Also, examinations were performed on Reactor Vessel Closure Washers and Bushings, CRD Housing Bolts and Rings, Closure Head Lug Welds, Reactor Vessel Interior Surfaces, Internals and on CRD Housing Welds.

Examinations were performed on the Pressurizer Shell to Head Circumferential Welds, Heater Bundle Longitudinal Welds, Nozzle to Vessel Welds and Inside Radius Sections, Nozzle to Safe-End Butt Weld, Lower Heater Bundle Studs and on integrally-welded attachments.

Examinations were performed on the Steam Generator 1A Upper and Lower Head to Tubesheet Welds, Steam Generators 1A and 1B Nozzle to Vessel Welds and Inside Radius Sections and on Steam Generator 1B Upper and Lower Head Manway Studs and Nuts and Upper and Lower Inspection Cover Bolting.

Dissimilar Metal Butt Welds in the Reactor Coolant System were examined. Also, Reactor Coolant Pumps 1B1 and 1B2 Lower Seal Housing Bolts and Reactor Coolant Pumps 1A1, 1A2, 1B1 and 1B2 Main Flange Bolts received examinations. Core Flood and Low Pressure Injection System Valve Bolting also received examinations.

Piping Welds in Reactor Coolant, Low Pressure Injection (Core Flood and Decay Heat), and High Pressure Injection Systems were examined. In addition, piping integrally-welded attachments in the Low Pressure Injection System were examined.

Visual examinations were performed on the Class 1 Pressure boundary during System Leakage Tests. Also, visual examinations were performed on Class 1 Component Supports of the High Pressure Injection and Low Pressure Injection Systems and on Steam Generator 1B Support Skirt.

The Inconel 600 tubing in Steam Generators 1A and 1B was inspected by eddy current during outage 13. The results of the inspections are shown in Section 5 of this report.

Reportable indications were found on the Class 1 Inspections shown in this section. Inspection and evaluation data for each reportable indication found on Class 1 Inspections is included in Section 5 of this report.

A detailed description of each inspection is found in the final Inservice Inspection Plan in Section 3 of this report. Results of each examination are found in Section 4.

1.2 Class 2 Inspection

The Class 2 Inspections included examinations on Steam Generator 1B Tubesheet to Shell Weld, Steam Generator 1A and Core Flood Tank 1B Nozzle to Shell Welds and Inside Radius Sections. Also, examinations were performed on Steam Generator 1A Feedwater Header and Core Flood Tank 1A support attachment welds. In addition, piping integrally-welded attachments of Main Steam, Feedwater, Low Pressure Injection, Reactor Building Spray and Component Cooling Systems received examinations.

Examinations were performed on circumferential butt welds of the Low Pressure Injection, Reactor Building Spray, Auxiliary Feedwater and Main Steam Systems. Also, longitudinal welds of the Low Pressure Injection, Reactor Building Spray and Main Steam Systems were examined. Branch connection welds in the Low Pressure Injection System were examined.

Visual examinations were performed on the Class 2 Pressure Boundary during System Hydrostatic Tests. Also, visual examinations were performed on Class 2 Component Supports of the Main Steam, Main Feedwater, Low Pressure Injection, Reactor Building Spray and Component Cooling Systems.

Reportable indications and conditions were found on the Class 2 Inspections shown in this section. Inspection and evaluation data for each reportable indication or condition is included in Section 6 of this report.

A detailed description of each inspection is found in the final Inservice Inspection Plan in Section 3 of this report. Results of each examination are found in Section 4.

1.3 Augmented Inspection

Augmented inspections were performed on Reactor Coolant Pump 1A2, 1B1, and 1B2 Flywheels, Thermal Stress Piping and on 1A Auxiliary Feedwater Header.

1.4 Alternate Examination

Alternate examinations at Oconee 1 were performed on welds 1-50-47-3 and 1-50-47-4 (Item Numbers E03.001.001 and E03.001.002 respectively). A detailed description of the examinations is found in the final Inservice Inspection Plan in Section 3 of this report. Results are found in Section 4.

1.5 Identification Numbers

Owner: Duke Power Company, 422 S Church St., Charlotte, NC 28201
Plant: Oconee Nuclear Station, Highway 130/183, Seneca, SC 29679
Plant Unit: 1
Owner Certificate of Authorization: N/A
Commercial Service Date: 7-15-73

Item	Manufacturer or Installer	Manufacturer or Installer Serial No.	State or Province No.	National Board No.
Reactor Vessel	Babcock & Wilcox	620-0003-51-52	N/A	N-101
Steam Generator A	Babcock & Wilcox	620-0003-55-1	N/A	N-103
Steam Generator B	Babcock & Wilcox	620-0003-55-2	N/A	N-104
Pressurizer	Babcock & Wilcox	620-0003-59	N/A	N-102

1.6 Authorized Nuclear Inservice Inspector(s)

Name: R. F. Elgin
Employer: The Hartford Steam Boiler Inspection & Insurance Company
Business Address: The Hartford Steam Boiler Inspection & Insurance Company
200 Ashford Center North
Suite 300
Atlanta, GA 30338

R F Elgin, ANI/ANII, 12-4-91

ITEM NUMBER	ID. NUMBER	DRAWING NUMBERS	LOCS.	INSP REQ.	PROC. NUMBERS	MATERIAL TYPE/GRADE	DIAM./ THICK	CALIB BLOCK	COMMENTS
B09.011.000	********** PIPING	CIRCUMFERENTIAL***** WELDS**********		***	*******	*****	__.__ __.__	*****	NOMINAL PIPE SIZE 4 IN. & OVER **********
B09.011.036	1PIB1-5	B&W 131914E6 ISI-OCN1-009		UT	NDE-600	CS	33.50 03.000	40350	PER 1-091-0085 SEE REQUEST FOR RELIEF ONS-003 PIR 1-091-0085
B09.012.000	********** PIPING	LONGITUDINAL******** WELDS**********		***	*******	*****	__.__ __.__	*****	NOMINAL PIPE SIZE 4 IN. & OVER **********
B09.021.000	********** PIPING	CIRCUMFERENTIAL***** WELDS**********		***	*******	*****	__.__ __.__	*****	NOMINAL PIPE SIZE ********** 4 IN. & SMALLER **********
B09.031.000	******* BRANCH PIPE	CONNECTION WELDS *** **********		***	*******	*****	__.__ __.__	*****	NOMINAL PIPE SIZE ********** 4 INCHES & OVER **********
B09.032.000	******* BRANCH PIPE	CONNECTION WELDS *** **********		***	*******	*****	__.__ __.__	*****	NOMINAL PIPE SIZE ********** LESS THAN 4 INCHES **********
B09.040.000	******* SOCKET WELDS	********** **********		***	*******	*****	__.__ __.__	*****	********** **********

DUKE POWER COMPANY
QUALITY ASSURANCE DEPARTMENT
PRE-SERVICE AND IN-SERVICE INSPECTION SYSTEM
OCONEE 1 CLASS 1 REPORTABLE ITEMS OUTAGE 13

ITEM NUMBER	ID. NUMBER	DRAWING NUMBERS	LOCS.	INSP REQ.	PROC. NUMBERS	MATERIAL TYPE/GRADE	DIAM./ THICK	CALIB BLOCK	COMMENTS
B16.011.000	**** STEAM GEMERATOR	TUBING **********		***	******* *******		__.__ __.___		***** STRIGHT TUBE DESIGN **** **********
B16.011.001	1SGA-TUBES	B&W 129309E7		ET	ISI-418	INCO	00.62 00.040	*****	* SELECT CAL. STANDARD PER VOL.1, SECT. 10.2
B16.011.002	1SGB-TUBES	B&W 129309E7		ET	ISI-418	INCO	00.62 00.040	*****	* SELECT CAL. STANDARD PER VOL.1, SECT. 10.2

ITEM NUMBER	ID. NUMBER	DRAWING NUMBERS	LOCS.	INSP REQ.	PROC. NUMBERS	MATERIAL TYPE/GRADE	DIAM./ THICK	CALIB BLOCK	COMMENTS
C02.010.000	********** NOZZLES	IN VESSELS ********* **********	_____ _____ _____	***	******* _____	***** _____	__.__ __.__	*****	1/2" NOMINAL THICKNESS AND**** LESS**********
C02.021.000	********NOZZLE	TO SHELL OR HEAD**** WELDS**********	_____ _____ _____	***	******* _____	***** _____	__.__ __.__	*****	********** **********
C02.021.001A	1SGA-WG23-1	OM-201-1873 ISI-OCN1-003	_____ _____ _____	MT	NDE-25 _____	CS _____	29.00 06.625	-----	GEN A STM OUTLET NOZZLE W-X AXIS PC 14 TO 3 PIR 1-091-0089 & 4-091-0093
C02.022.000	********NOZZLE	INSIDE RADIUS******* SECTION**********	_____ _____ _____	***	******* _____	***** _____	__.__ __.__	*****	********** **********

ITEM NUMBER	ID. NUMBER	DRAWING NUMBERS	LOCS.	INSP REQ.	PROC. NUMBERS	MATERIAL TYPE/GRADE	DIAM./ THICK	CALIB BLOCK	COMMENTS
C05.011.000	*** CLASS 2 PIPING	CIRCUMFERENTIAL WELD **********		***	*******	*****	__.__	*****	NOMINAL WALL THICKNESS ******* 1/2 IN. OR LESS **********
C05.012.000	***** CLASS 2 PIPING	LONGITUDINAL WELDS * **********		***	*******	*****	__.__	*****	NOMINAL WALL THICKNESS ******* 1/2 IN. OR LESS **********
C05.021.000	***** CLASS 2 PIPING	CIRCUMFERENTIAL***** WELDS**********		***	*******	*****	__.__	*****	GREATER THAN 1/2 IN. ********* NOMINAL WALL THICKNESS *******
C05.021.103A	1-03-3-28B	SYS 03 ISO 3 ----------		MT	NDE-25	CS	20.00 01.031	-----	---------- PIR 1-091-0079
C05.022.000	***** CLASS 2 PIPING	LONGITUDINAL WELDS * **********		***	******* *******		__.__	-----	GREATER THAN 1/2 IN. ********* NOMINAL WALL THICKNESS *******
C05.031.000	CLASS 2 PIPING	BRANCH CONNECTION WELDS**********		***	******* *******	*****	__.__	*****	********** **********

DUKE POWER COMPANY
QUALITY ASSURANCE DEPARTMENT
PRE-SERVICE AND IN-SERVICE INSPECTION SYSTEM
OCONEE 1 CLASS 2 REPORTABLE ITEMS OUTAGE 13

ITEM NUMBER	ID. NUMBER	DRAWING NUMBERS	LOCS.	INSP REQ.	PROC. NUMBERS	MATERIAL TYPE/GRADE	DIAM./ THICK	CALIB BLOCK	COMMENTS
F1.01.000	********** CLASS 1	SUPPORTS********** **********		***	*******	*****	__.__	*****	********** **********
F1.02.000	********** CLASS 2	SUPPORTS********** **********		***	*******	*****	__.__	*****	********** **********
F1.02.478	1-54A-DE10	0-435B		VT	QAL-14	-----	08.00	-----	REACT. BLDG. SPRAY-SWAY STRUT 1-54A-0-435B-DE10 PIR 1-091-0083
F1.03.000	********** CLASS 3	SUPPORTS ********** **********		***	*******		__.__		********** **********

2.0 Status of Required Inspections

The completion status of inspections required by the 1980 ASME Code Section XI, including addenda through Winter 1980, is summarized in this section. The requirements are listed by the ASME Section XI Examination Category as defined in Table IWB-2500-1 for Class 1 Inspections, in Table IWC-2500-1 for Class 2 Inspections. Augmented and alternate inspections are also included.

Class 1 Inspections

Section XI Category	Description	Inspections Required	Inspections Completed	Percentage Completed	Deferral Allowed
B-A	Pressure Retaining Welds in Reactor Vessel	14 Welds	13.666 Welds	97.61%	Yes
B-B	Pressure Retaining Welds in Vessels Other than Reactor Vessel	15 Welds	13 Welds	86.66%	No
B-D	Full Penetration Welds of Nozzles in Vessels	60 Inspections	56 Inspections	93.33%	Partial
B-E	Pressure Retaining Partial Penetration Welds in Vessels	31 Welds	31 Welds	100%	No
B-F	Pressure Retaining Dissimilar Metal Welds	38 Welds	36 Welds	94.73%	No
B-G-1	Pressure Retaining Bolting Greater than 2 Inch Diameter	425 Items	390 Items	91.76%	Yes
B-G-2	Pressure Retaining Bolting 2 Inches and Less in Diameter	39 Connections	38 Connections	97.43%	No
B-H	Integral Attachment for Vessels	12 Attachments	12 Attachments	100%	No
B-J	Pressure Retaining Welds in Piping	119 Welds	103 Welds	86.55%	No

Class 1 Inspections (Continued)

Section XI Category	Description	Inspections Required	Inspections Completed	Percentage Completed	Deferral Allowed
B-K-1	Integral Attachments for Piping, Pumps and Valves	3 Attachments	3 Attachments	100%	No
B-L-1	Pressure Retaining Welds in Pump Casings	1 Weld	None	0%	Yes
B-L-2	Pump Casings	1 Casing	None	0%	Yes
B-M-1	Pressure Retaining Welds in Valve Bodies	None	N/A	N/A	N/A
B-M-2	Valve Body > 4 in. Nominal Pipe Size	2 Valves	1 Valve	50%	Yes
B-N-1	Interior of Reactor Vessel	3 Items	3 Items	100%	No
B-N-2	Integrally Welded Core Support Structures and Interior Attachments to Reactor Vessels	None	N/A	N/A	N/A
B-N-3	Removable Core Support Structures	1 Item	1 Item	100%	Yes
B-O	Pressure Retaining Welds in Control Rod Housings	3 Housings	3 Housings	100%	Yes
B-P	All Pressure Retaining Components				No
	System Leakage Test	114 Components	114 Components	100%	
	System Hydrostatic Test	19 Components	0 Components	0%	
B-Q	Steam Generator Tubing	100% Station Technical Specifications Met			N/A
F1.01	Class 1 Component Supports	90 Supports	74 Supports	82.22%	No

Class 2 Inspections

Section XI Category	Description	Inspections Required	Inspections Completed	Percentage Completed	Deferral Allowed
C-A	Pressure Retaining Welds in Pressure Vessels	10 Welds	7 Welds	70%	No
C-B	Pressure Retaining Nozzle Welds in Vessels	5 Welds	5 Welds	100%	No
C-C	Integral Attachments for Vessels, Piping, Pumps and Valves	59 Attachments	52 Attachments	88.13%	No
C-D	Pressure Retaining Bolting Exceeding 2 Inches in Diameter	1 Item	1 Item	100%	No
C-F	Pressure Retaining Welds in Piping	251 Welds	202 Welds	80.47%	No
C-G	Pressure Retaining Welds in Pumps and Valves	None	N/A	N/A	N/A
C-H	All Pressure Retaining Components				No
	System or Component Functional Test	34 Components	27 Components	79.41%	
	System Hydrostatic Test	57 Components	12 Components	21.05%	
F1.02	Class 2 Component Supports	313 Supports	261 Supports	83.38%	No

Augmented Inspections

Description	Percentage Complete
Reactor Coolant Pump Flywheels	100% of Technical Specifications met
High Pressure Injection Nozzle Safe-ends	100% of requirements
Pressurizer Surge Piping Drain Nozzle	100% of requirements for Outages 11, 12, & 13
Thermal Stress Piping	100% of requirements
Pressurizer Spray Piping Thermal Transient	100% of requirements
Auxiliary Feedwater Heater (PSC-21-82) Water Hammer Examinations	100% of requirements for Outage 13

Alternate Inspections

Description	Percentage Complete
Main Feedwater Integrally - Welded Attachment (Item Number C03.040.038)	100% of requirements
Pressurizer Relief Valve Welds (Item Numbers E03.001.001 & E03.001.002)	100% of requirements

3.0 Final Inservice Inspection Plan For Outage 13

The final ISI Plan presented in this section lists all examinations credited for Outage 13 at Oconee Unit 1. This includes ASME Section XI Class 1 and 2, augmented and alternate inspections required by the plant technical specifications, NRC Bulletins and Problem Investigation Reports.

The information shown below is a field description for the reporting format included in this section of the report:

Item Number	=	ASME Section XI Tables IWB-2500-1 (Class 1), IWC-2500-1 (Class 2), IWD-2500-1 (Class 3), IWF-2500-1 (Class 1, Class 2 and Class 3), Augmented and Alternate Requirements
ID Number	=	Unique Identification Number
Drawing Number	=	Location and/or Detail Drawing
Locs.	=	Location
Insp. Req.	=	Examination Technique - Magnetic Particle, Dye Penetrant, etc.
Proc. Numbers	=	Examination Procedures
Material Type/Grade	=	General Description of Material
Diam./Thick	=	Diameter/Thickness
Calib. Block	=	Calibration Block
Comments	=	General and/or Detail Description

PROGRAM: NISIRUNB-QAISI02
FILE: C007133
PLANT: OCONEE UNIT 1
KEY: ITEM NUMBER B01

DUKE POWER COMPANY
QUALITY ASSURANCE DEPARTMENT
PRE-SERVICE AND IN-SERVICE INSPECTION SYSTEM
OCONEE 1 INSERVICE INSPECTION LISTING OUTAGE 13

DATE 12/03/91

ITEM NUMBER	ID. NUMBER	DRAWING NUMBERS	LOCS.	INSP REQ.	PROC. NUMBERS	MATERIAL TYPE/GRADE	DIAM./ THICK	CALIB BLOCK	COMMENTS
B01.011.000	REACTOR VESSEL	CIRCUMFERENTIAL***** SHELL WELDS*********		***	*******	*****	__.__ __.__	*****	**********
B01.011.001	1RPV-WR17	0M-201-1877 ISI-0CN1-001		UT	ISI-138	CS	09.500	40393	CIR SEAM 09 TO 10
B01.011.002	1RPV-WR1A	0M-201-1877 ISI-0CN1-001		UT	ISI-138	CS	09.500	40393	CIR SEAM A1 TO 10
B01.011.003	1RPV-WR1	0M-201-1877 ISI-0CN1-001		UT	ISI-138	CS	09.500	40393	CIR SEAM A1 TO A2
B01.011.004	1RPV-WR18	0M-201-1877 ISI-0CN1-001		UT	ISI-138	CS	12.000	40390	CIR SEAM 08 TO 09
B01.012.000	REACTOR VESSEL	LONGITUDINAL******** SHELL WELDS*********		***	*******	*****	__.__ __.__	*****	**********
B01.012.001	1RPV-A2-WR2	0M-201-1877 ISI-0CN1-001		UT	ISI-138	CS	09.500	40393	LONG SEAM X-Y AXIS A2 TO A2 BELTLINE REGION
B01.012.002	1RPV-A2-WR2A	0M-201-1877 ISI-0CN1-001		UT	ISI-138	CS	09.500	40393	LONG SEAM Z-W AXIS A2 TO A2

DUKE POWER COMPANY
QUALITY ASSURANCE DEPARTMENT
PRE-SERVICE AND IN-SERVICE INSPECTION SYSTEM
OCONEE 1 INSERVICE INSPECTION LISTING OUTAGE 13

ITEM NUMBER	ID. NUMBER	DRAWING NUMBERS	LOCS.	INSP REQ.	PROC. NUMBERS	MATERIAL TYPE/GRADE	DIAM./ THICK	CALIB BLOCK	COMMENTS
B01.012.003	1RPV-A1-WR2	OM-201-1877 ISI-OCN1-001		UT	ISI-138	CS	09.50	40393	LONG SEAM X-Y AXIS A1 TO A1
B01.012.004	1RPV-A1-WR2A	OM-201-1877 ISI-OCN1-001		UT	ISI-138	CS	09.500	40393	LONG SEAM Z-W AXIS A1 TO A1
B01.012.005	1RPV-A10-WR2	OM-201-1877 ISI-OCN1-001		UT	ISI-138	CS	09.500	40393	LON SEAM X-Y AXIS 10 TO 10
B01.012.006	1RPV-A10-WR2A	OM-201-1877 ISI-OCN1-001		UT	ISI-138	CS	09.500	40393	LONG SEAM Z-W AXIS 10 TO 10
B01.021.000	REACTOR VESSEL	HEAD WELDS********** CIRCUMFERENTIAL*****		***	*******	*****		*****	**********
B01.021.002	1RPV-WR34	OM-201-1877 ISI-OCN1-001		UT	ISI-138	CS	05.500	40392	CIR SEAM A2 TO 36
B01.030.000	REACTOR VESSEL	SHELL TO FLANGE WELD **********		***	*******	*****		*****	**********
B01.030.001	1RPV-WR19	OM-201-1877 ISI-OCN1-001		UT	ISI-138	CS	12.000	40390	PC 7 TO 8 UT FROM VESSEL ID

DUKE POWER COMPANY
QUALITY ASSURANCE DEPARTMENT
PRE-SERVICE AND IN-SERVICE INSPECTION SYSTEM
OCONEE 1 INSERVICE INSPECTION LISTING OUTAGE 13

ITEM NUMBER	ID. NUMBER	DRAWING NUMBERS	LOCS.	INSP REQ.	PROC. NUMBERS	MATERIAL TYPE/GRADE	DIAM./ THICK	CALIB BLOCK	COMMENTS
B01.040.000	REACTOR VESSEL	HEAD TO FLANGE WELDS	_____	***	*******	*****	__.__	*****	**********
		**********	_____		_____	_____	__.__		**********
			_____						_____
									_____

DUKE POWER COMPANY
QUALITY ASSURANCE DEPARTMENT
PRE-SERVICE AND IN-SERVICE INSPECTION SYSTEM
OCONEE 1 INSERVICE INSPECTION LISTING OUTAGE 13

ITEM NUMBER	ID. NUMBER	DRAWING NUMBERS	LOCS.	INSP REQ.	PROC. NUMBERS	MATERIAL TYPE/GRADE	DIAM./ THICK	CALIB BLOCK	COMMENTS
B02.011.000	***PRESSURIZER	SHELL TO HEAD WELDS CIRCUMFERENTIAL*****		***	*******	*****	__.__	*****	********** **********
B02.011.003	1PZR-WP4	OM-201-1878 ISI-OCN1-002		UT	NDE-620 NDE-640	CS	06.188	40338	SHELL TO HT BUN CIR SM ID 3 TO 4/41 PTS 4-6 PER IWB 3122.4(B) INSP.RFO 13 PER IWB-2420(B)
B02.011.006	1PZR-WP28	OM-201-1878 ISI-OCN1-002		UT	NDE-620 NDE-640	CS	04.750	40394	LWR HD TO HT BUNDLE CIR SM ID 4/40 TO 6
B02.012.000	***PRESSURIZER	WELDS********** LONGITUDINAL********		***	*******	*****	__.__	*****	********** **********
B02.012.004	1PZR-WP7-1	OM-201-1878 ISI-OCN1-002		UT	NDE-620 NDE-640	CS	06.188	40338	Y-AXIS HT BUNDLE LG SM ID 04 TO 40/41
B02.012.005	1PZR-WP7-2	OM-201-1878 ISI-OCN1-002		UT	NDE-620 NDE-640	CS	06.188	40338	X-AXIS HT BUNDLE LG SM ID 04 TO 40/41
B02.040.000	*********STEAM	GENERATORS TUBESHEET TO HEAD WELDS*******		***	*******	*****	__.__	*****	********** **********
B02.040.001	1SGA-WG58-1	OM-201-1873 ISI-OCN1-003		UT	NDE-620 NDE-640	CS	08.500	40393	STEAM GEN 1A UPPER HEAD TO TUBESHEET PC 8 TO 51 INSP. RFO 13 PER IWB-2420(B)

ITEM NUMBER	ID. NUMBER	DRAWING NUMBERS	LOCS.	INSP REQ.	PROC. NUMBERS	MATERIAL TYPE/GRADE	DIAM./ THICK	CALIB BLOCK	COMMENTS
B02.040.004	1SGB-WG58-2	OM-201-1873 ISI-OCN1-004		UT	NDE-620 NDE-640	CS	08.500	40393	STEAM GEN 1B LOWER HEAD TO TUBESHEET PC 7 TO 50 INSP.RFO#12 PER IWB-2430(A)
B02.051.000	HEAT EXCHANGER	SHELL / HEAD WELDS CIRCUMFERENTIAL ****	***** ***** *****	***	******* *******	*****		-----	**** INSPECTOR TO RECORD ***** ** COOLER S\N ON INSP. DATA **
B02.060.000	HEAT EXCHANGER	TUBESHEET TO SHELL** WELDS**********		***	*******	*****		*****	**** INSPECTOR TO RECORD ***** ** COOLER S\N ON INSP. DATA **

ITEM NUMBER	ID. NUMBER	DRAWING NUMBERS	LOCS.	INSP REQ.	PROC. NUMBERS	MATERIAL TYPE/GRADE	DIAM./ THICK	CALIB BLOCK	COMMENTS
B03.090.000	REACTOR VESSEL	NOZZLE TO VESSEL**** WELDS********** **********	____ ____ ____	***	******* *******	____ _____	__.__ __.__	____	********** ********** _____ _____
B03.090.001	1RPV-WR13	OM-201-1877 ISI-OCN1-001	____ ____ ____	UT	ISI-138 _____	CS _____	60.00 12.000	40390	X-OUTLET NOZZLE PC 19 TO 08 & 09 UT FROM VESSEL ID _____ _____
B03.090.001A	1RPV-WR13	OM-201-1877 ISI-OCN1-001	____ ____ ____	UT	ISI-138 _____	CS _____	60.00 12.000	50304	X-OUTLET NOZZLE PC 19 TO 08 & 09 UT FROM NOZZLE ID _____ _____
B03.090.002	1RPV-WR13A	OM-201-1877 ISI-OCN1-001	____ ____ ____	UT	ISI-138 _____	CS _____	60.00 12.000	40390	Z-OUTLET NOZZLE PC 19 TO 08 & 09 UT FROM VESSEL ID _____ _____
B03.090.002A	1RPV-WR13A	OM-201-1877 ISI-OCN1-001	____ ____ ____	UT	ISI-138 _____	CS _____	60.00 12.000	50304	Z-OUTLET NOZZLE PC 19 TO 08 & 09 UT FROM NOZZLE ID _____ _____
B03.090.003	1RPV-WR12	OM-201-1877 ISI-OCN1-001	____ ____ ____	UT	ISI-138 _____	CS _____	48.00 12.000	40390	W-X INLET NOZZLE PC 18 TO 08 & 09 UT FROM VESSEL ID _____ _____
B03.090.003A	1RPV-WR12	OM-201-1877 ISI-OCN1-001	____ ____ ____	UT	ISI-138 _____	CS _____	48.00 12.000	50304	W-X INLET NOZZLE PC 18 TO 08 & 09 UT FROM NOZZLE ID _____ _____
B03.090.004	1RPV-WR12A	OM-201-1877 ISI-OCN1-001	____ ____ ____	UT	ISI-138 _____	CS _____	48.00 12.000	40390	X-Y INLET NOZZLE PC 18 TO 08 & 09 UT FROM VESSEL ID _____ _____

DUKE POWER COMPANY
QUALITY ASSURANCE DEPARTMENT
PRE-SERVICE AND IN-SERVICE INSPECTION SYSTEM
OCONEE 1 INSERVICE INSPECTION LISTING OUTAGE 13

ITEM NUMBER	ID. NUMBER	DRAWING NUMBERS	LOCS.	INSP REQ.	PROC. NUMBERS	MATERIAL TYPE/GRADE	DIAM./ THICK	CALIB BLOCK	COMMENTS
B03.090.004A	1RPV-WR12A	OM-201-1877 ISI-OCN1-001		UT	ISI-138	CS	48.00 12.000	50304	X-Y INLET NOZZLE PC 18 TO 08 & 09 UT FROM NOZZLE ID
B03.090.005	1RPV-WR12B	OM-201-1877 ISI-OCN1-001		UT	ISI-138	CS	48.00 12.000	40390	Y-Z INLET NOZZLE PC 18 TO 08 & 09 UT FROM VESSEL ID
B03.090.005A	1RPV-WR12B	OM-201-1877 ISI-OCN1-001		UT	ISI-138	CS	48.00 12.000	50304	Y-Z INLET NOZZLE PC 18 TO 08 & 09 UT FROM NOZZLE ID
B03.090.006	1RPV-WR12C	OM-201-1877 ISI-OCN1-001		UT	ISI-138	CS	48.00 12.000	40390	Z-W INLET NOZZLE PC 18 TO 08 & 09 UT FROM VESSEL ID
B03.090.006A	1RPV-WR12C	OM-201-1877 ISI-OCN1-001		UT	ISI-138	CS	48.00 12.000	50304	Z-W INLET NOZZLE PC 18 TO 08 & 09 UT FROM NOZZLE ID
B03.090.007	1RPV-WR54	OM-201-1877 ISI-OCN1-001		UT	ISI-138	CS	25.00 12.000	40390	CORE FLOOD NOZ W-AXIS PC 17 TO 08 & 09 UT FROM VESSEL ID
B03.090.007A	1RPV-WR54	OM-201-1877 ISI-OCN1-001		UT	ISI-138	CS	25.00 12.000	40390	CORE FLOOD NOZ W-AXIS PC 17 TO 08 & 09 UT FROM NOZZLE ID INSP COVERED BY B03.090.007
B03.090.008	1RPV-WR54A	OM-201-1877 ISI-OCN1-001		UT	ISI-138	CS	25.00 12.000	40390	CORE FLOOD NOZ Y-AXIS PC 17 TO 08 & 09 UT FROM VESSEL ID

DUKE POWER COMPANY
QUALITY ASSURANCE DEPARTMENT
PRE-SERVICE AND IN-SERVICE INSPECTION SYSTEM
OCONEE 1 INSERVICE INSPECTION LISTING OUTAGE 13

ITEM NUMBER	ID. NUMBER	DRAWING NUMBERS	LOCS.	INSP REQ.	PROC. NUMBERS	MATERIAL TYPE/GRADE	DIAM./ THICK	CALIB BLOCK	COMMENTS
B03.090.008A	1RPV-WR54A	OM-201-1877 ISI-OCN1-001		UT	ISI-138	CS	25.00 12.000	40390	CORE FLOOD NOZ Y-AXIS PC 17 TO 08 & 09 UT FROM NOZZLE ID INSP COVERED BY B03.090.008
B03.100.000	REACTOR VESSEL	*******NOZZLE INSIDE RADIUS SECTION******		***	*******	*****	__.__ __.__	*****	**********
B03.100.001	1RPV-WR13	OM-201-1877 ISI-OCN1-001		UT	ISI-138	CS	60.00 12.000	50304	X-OUTLET NOZZLE PC 19 TO 08 & 09 UT FROM NOZZLE ID
B03.100.002	1RPV-WR13A	OM-201-1877 ISI-OCN1-001		UT	ISI-138	CS	60.00 12.000	50304	Z-OUTLET NOZZLE PC 19 TO 08 & 09 UT FROM NOZZLE ID
B03.100.003	1RPV-WR12	OM-201-1877 ISI-OCN1-001		UT	ISI-138	CS	48.00 12.000	50304	W-X INLET NOZ PC 18 TO 08 & 09 UT FROM NOZZLE ID
B03.100.004	1RPV-WR12A	OM-201-1877 ISI-OCN1-001		UT	ISI-138	CS	48.00 12.000	50304	X-Y INLET NOZ PC 18 TO 08 & 09 UT FROM NOZZLE ID
B03.100.005	1RPV-WR12B	OM-201-1877 ISI-OCN1-001		UT	ISI-138	CS	48.00 12.000	50304	Y-Z INLET NOZ PC 18 TO 08 & 09 UT FROM NOZZLE ID
B03.100.006	1RPV-WR12C	OM-201-1877 ISI-OCN1-001		UT	ISI-138	CS	48.00 12.000	50304	Z-W INLET NOZ PC 18 TO 08 & 09 UT FROM NOZZLE ID

ITEM NUMBER	ID. NUMBER	DRAWING NUMBERS	LOCS.	INSP REQ.	PROC. NUMBERS	MATERIAL TYPE/GRADE	DIAM./ THICK	CALIB BLOCK	COMMENTS
B03.100.007	1RPV-WR54	OM-201-1877 ISI-OCN1-001		UT	ISI-138	CS	25.00 12.000	40390	CORE FLOOD NOZ W-AXIS PC 17 TO 08 & 09 UT FROM NOZZLE ID INSP COVERED BY B03.090.007
B03.100.008	1RPV-WR54A	OM-201-1877 ISI-OCN1-001		UT	ISI-138	CS	25.00 12.000	40390	CORE FLOOD NOZ Y-AXIS PC 17 TO 08 & 09 UT FROM NOZZLE ID INSP COVERED BY B03.090.008
B03.110.000	***PRESSURIZER	NOZZLE TO VESSEL**** WELDS**********		***	*******	*****	__.__ __.__	*****	********** **********
B03.110.009	1PZR-WP26-1	OM-201-1878 ISI-OCN1-002		UT	NDE-620 NDE-640	CS	. 06.188	40338	PZR SEN & SAMPLING NOZ BET W&X ID 30 TO 04
B03.110.010	1PZR-WP26-2	OM-201-1878 ISI-OCN1-002		UT	NDE-620 NDE-640	CS	. 06.188	40338	PZR SEN & SAMPLING NOZ BET Y&Z ID 30 TO 04
B03.110.011	1PZR-WP26-3	OM-201-1878 ISI-OCN1-002		UT	NDE-620 NDE-640	CS	. 06.188	40338	PZR SENSING/SAMPLING NOZZLE 47 DEGREES OFF W-AXIS ID 30 TO 04
B03.110.012	1PZR-WP26-7	OM-201-1878 ISI-OCN1-002		UT	NDE-620 NDE-640	CS	. 06.188	40338	PZR SENSING/SAMPLING NOZZLE 40 DEGREES OFF W-AXIS
B03.120.000	***PRESSURIZER	NOZZLE INSIDE RADIUS SECTION**********		***	*******	*****	__.__ __.__	*****	********** **********

ITEM NUMBER	ID. NUMBER	DRAWING NUMBERS	LOCS.	INSP REQ.	PROC. NUMBERS	MATERIAL TYPE/GRADE	DIAM./ THICK	CALIB BLOCK	COMMENTS
B03.120.009	1PZR-WP26-1	OM-201-1878 ISI-OCN1-002		UT	NDE-680	CS	06.188	40338	SAMPLING NOZZLE BETWEEN W & X PC 30 TO 4 INSIDE RADIUS
B03.120.010	1PZR-WP26-2	OM-201-1878 ISI-OCN1-002		UT	NDE-680	CS	06.188	40338	SAMPLING NOZZLE BETWEEN Y & Z PC 30 TO 4 INSIDE RADIUS
B03.120.011	1PZR-WP26-3	OM-201-1878 ISI-OCN1-002		UT	NDE-680	CS	06.188	40338	SAMPLING NOZZLE 47 DEGREES OFF W AXIS PC 30 TO 4 INSIDE RAD.
B03.120.012	1PZR-WP26-7	OM-201-1878 ISI-OCN1-002		UT	NDE-680	CS	06.188	40338	SAMPLING NOZZLE 40 DEGREES OFF W AXIS PC 30 TO 4 INSIDE RAD.
B03.130.000	*********STEAM	GENERATOR NOZZLE TO VESSEL WELDS********		***	*******	*****	__.__	*****	**********
B03.130.005	1SGA-WG25	OM-201-1873 ISI-OCN1-003		UT	NDE-620 NDE-640	CS	48.63 08.000	40393	1A INLET NOZZLE ID 70 TO 08
B03.130.006	1SGB-WG25	OM-201-1873 ISI-OCN1-004		UT	NDE-620 NDE-640	CS	48.63 08.000	40393	1B INLET NOZZLE ID 70 TO 08
B03.140.000	*********STEAM	GENERATOR NOZZLE INSIDE RADIUS*******		***	*******	*****	__.__	*****	**********

ITEM NUMBER	ID. NUMBER	DRAWING NUMBERS	LOCS.	INSP REQ.	PROC. NUMBERS	MATERIAL TYPE/GRADE	DIAM./ THICK	CALIB BLOCK	COMMENTS
B03.140.005	1SGA-WG25	OM-201-1873 ISI-OCN1-003		UT	NDE-620 NDE-640	CS	48.63 08.000	40393	1A INLET NOZZLE PC 70 TO 08
B03.140.006	1SGB-WG25	OM-201-1873 ISI-OCN1-004		UT	NDE-620 NDE-640	CS	48.63 08.000	40393	1B INLET NOZZLE PC 70 TO 08
B03.150.000	HEAT EXCHANGER	NOZZLE TO VESSEL WELDS**********		***	*******	*****	__.__ __.__	*****	**** INSPECTOR TO RECORD ***** ** COOLER S\N ON INSP. DATA **
B03.160.000	HEAT EXCHANGER	NOZZLE INSIDE RADIUS SECTION**********		***	*******	*****	__.__ __.__	*****	**** INSPECTOR TO RECORD ***** ** COOLER S\N ON INSP. DATA **

DUKE POWER COMPANY
QUALITY ASSURANCE DEPARTMENT
PRE-SERVICE AND IN-SERVICE INSPECTION SYSTEM
OCONEE 1 INSERVICE INSPECTION LISTING OUTAGE 13

ITEM NUMBER	ID. NUMBER	DRAWING NUMBERS	LOCS.	INSP REQ.	PROC. NUMBERS	MATERIAL TYPE/GRADE	DIAM./ THICK	CALIB BLOCK	COMMENTS
B04.012.000	*******PARTIAL	PENETRATION********* CRD NOZZLES*********		***	*******	*****	__.__ __.__	*****	INSPECT AND DOCUMENT 100 % OF NOZZLE WELDS ON NPD PROCEDURE
B04.012.001	1RPV-CRDM	B&W 128714E9		VIS	ISI-350 QAL-15	--	__.__ __.__	-----	CLOSE HEAD J GROOVE WELD,TOTAL 69 NOZ PEN,ALT.EXAM QCL-15
B04.013.000	*******PARTIAL	PENETRATION********* INSTRUMENTATION*****		***	*******	*****	__.__ __.__	*****	INSPECT AND DOCUMENT 100 % OF NOZZLE WELDS ON NPD PROCEDURE
B04.013.001	1RPV-INCORE	B&W 154712E		VT2	QAL-15	INCO	__.__ __.__	-----	RV INCORE MONITORING NOZ,TOTAL 52 NOZ, ALT.EXAM ISI-350

ITEM NUMBER	ID. NUMBER	DRAWING NUMBERS	LOCS.	INSP REQ.	PROC. NUMBERS	MATERIAL TYPE/GRADE	DIAM./ THICK	CALIB BLOCK	COMMENTS
B05.010.000	REACTOR VESSEL	NOZZLE TO SAFE END** BUTT WELDS**********		***	*******	*****	__.__ __.___	*****	NOMINAL PIPE SIZE > 4 INCH**** **********
B05.010.001A	1RPV-WP53	OM-201-92 ISI-OCN1-001		UT	NDE-610 ISI-138	CS/SS	15.63 01.688	40388	A SIDE CORE FLD W-AXIS SAFE END UT FROM NOZZLE SIDE
B05.010.001B	1RPV-WR53	OM-201-92 ISI-OCN1-001		UT	NDE-610 ISI-138	CS/SS	15.63 01.688	40389	A SIDE CORE FLD W-AXIS SAFE END UT FROM SAFE END SIDE
B05.010.002A	1RPV-WR53A	OM-201-92 ISI-OCN1-001		UT	NDE-610 ISI-138	CS/SS	15.63 01.688	40388	B SIDE CORE FLD Y-AXIS SAFE END UT FROM NOZZLE SIDE
B05.010.002B	1RPV-WR53A	OM-201-92 ISI-OCN1-001		UT	NDE-610 ISI-138	CS/SS	15.63 01.688	40389	B SIDE CORE FLD Y-AXIS SAFE END UT FROM SAFE END SIDE
B05.020.000	***PRESSURIZER	NOZZLE TO SAFE END** BUTT WELDS**********		***	*******	*****	__.__ __.___	*****	NOMINAL PIPE SIZE > 4 INCH**** **********
B05.020.002	1PZR-WP45	ISI-OCN1-002 ----------		UT	NDE-610	CS/IN	05.10 00.750	40367	PRESSURIZER SPRAY NOZZLE SAFE END UT FROM SAFE END SIDE
B05.020.002A	1PZR-WP45	ISI-OCN1-002 ----------		UT	NDE-610	CS/IN	05.10 00.750	40405	PRESSURIZER SPRAY NOZZLE SAFE END UT FROM NOZZLE SIDE

DUKE POWER COMPANY
QUALITY ASSURANCE DEPARTMENT
PRE-SERVICE AND IN-SERVICE INSPECTION SYSTEM
OCONEE 1 INSERVICE INSPECTION LISTING OUTAGE 13

ITEM NUMBER	ID. NUMBER	DRAWING NUMBERS	LOCS.	INSP REQ.	PROC. NUMBERS	MATERIAL TYPE/GRADE	DIAM./ THICK	CALIB BLOCK	COMMENTS
B05.020.002B	1PZR-WP45	ISI-OCN1-002		PT	NDE-35	CS/IN	05.10 00.750	-----	PRESSURIZER SPRAY NOZZLE SE AT PRESSURIZER PC 9 TO 45
B05.021.000	******** PRESSURIZER	NOZZLE-TO-SAFE END BUTT WELDS *********		***	*******		__.__ __.__		NOMINAL PIPE SIZE < 4 INCHES **********
B05.021.002	1PZR-WP91-2	ISI-OCN1-002		PT	NDE-35	CS/SS	02.50 00.375		PZR RELIEF NOZZLE SAFE END X-Y AXIS PC 32 TO 31
B05.021.003	1PZR-WP91-3	ISI-OCN1-002		PT	NDE-35	CS/SS	02.50 00.375		PZR RELIEF NOZZLE SAFE END Z-W AXIS PC 32 TO 31
B05.050.000	CLASS 1 PIPING	DISSIMILAR METAL**** BUTT WELDS**********		***	*******	*****	__.__ __.__	*****	NOMINAL PIPE SIZE 4 IN. & OVER **********
B05.050.005	1PIB1-7	OM-201-1845 ISI-OCN1-009		UT	NDE-610	CS/SS	33.50 03.000	40350	B1 SUCTION PUMP SAFE END TO PIPE UT FROM PIPE SIDE
B05.050.005A	1PIB1-7	OM-201-1845 ISI-OCN1-009		UT	NDE-610	CS/SS	33.50 03.000	40397	B1 SUCTION PUMP SAFE END TO PIPE UT FROM SAFE END SIDE
B05.050.005B	1PIB1-7	OM-201-1845 ISI-OCN1-009		PT	NDE-35	CS/SS	33.50 03.000	-----	B1 SUCTION PUMP SE TO PIPE CIR SEAM PC 210 TO 215

ITEM NUMBER	ID. NUMBER	DRAWING NUMBERS	LOCS.	INSP REQ.	PROC. NUMBERS	MATERIAL TYPE/GRADE	DIAM./ THICK	CALIB BLOCK	COMMENTS
B05.050.006	1PDB1-2	OM-201-1844 ISI-OCN1-013		UT	NDE-610	CS/SS	33.50 03.000	40350	B1 DISCHARGE PUMP SAFE END TO ELBOW UT FROM ELBOW SIDE
B05.050.006A	1PDB1-2	OM-201-1844 ISI-OCN1-013		UT	NDE-610	CS/SS	33.50 03.000	40397	B1 DISCHARGE PUMP SAFE END TO ELBOW UT FROM SAFE END SIDE
B05.050.006B	1PDB1-2	OM-201-1844 ISI-OCN1-013		PT	NDE-35	CS/SS	33.50 03.000	-----	B1 DISCH PUMP SE TO ELBOW PC 213 TO 212
B05.050.011	1PSP-1	ISI-OCN1-016 SYS 50 ISO 3.1		UT	NDE-610	SS/IN	04.00 00.438	50373	PRESS.SPRAY T.E. TO S.E. PC.45 TO 90 UT FROM SAFE END SIDE
B05.050.011A	1PSP-1	ISI-OCN1-016 SYS 50 ISO 3.1		UT	NDE-610	SS/IN	04.00 00.438	40406	PRESS.SPRAY T.E. TO S.E. PC.45 TO 90 UT FROM PIPE SIDE
B05.050.011B	1PSP-1	ISI-OCN1-016 SYS 50 ISO 3.1		PT	NDE-35	SS/IN	04.00 00.438		PRESSURIZER SPRAY TERMINAL END TO SAFE END WELD
B05.051.000	CLASS 1 PIPING	DISSIMILAR METAL**** BUTT WELDS**********		***	*******	*****	__.__ __.___	*****	NOMINAL PIPE SIZE < 4 INCH**** **********
B05.051.006	1PIB1-11	OM-201-595 ISI-OCN1-009		PT	NDE-35	CS/IN	03.50 00.672	-----	B1 SUCTION DRAIN NOZZLE SAFE END PC 87 TO 88

ITEM NUMBER	ID. NUMBER	DRAWING NUMBERS	LOCS.	INSP REQ.	PROC. NUMBERS	MATERIAL TYPE/GRADE	DIAM./ THICK	CALIB BLOCK	COMMENTS
B05.051.007	1PIB1-12	OM-201-2296 ISI-OCN1-009		PT	NDE-35	CS/IN	07.50 03.000	-----	B1 SUCTION RTE NOZZLE SAFE END PC 58 TO 215
B05.051.008	1PDB1-11	OM-201-597 ISI-OCN1-013		PT	NDE-35	CS/SS	03.50 00.750	-----	B1 DISCHARGE HPI NOZZLE TO SAFE END PC 46 TO 47
B05.051.011	1PDB2-11	OM-201-597 ISI-OCN1-014		PT	NDE-35	CS/SS	03.50 00.750	-----	B2 DISCHARGE HPI NOZZLE TO SAFE END PC.46 TO 47
B05.051.015	1PHB-13	OM-201-2296 ISI-OCN1-006		PT	NDE-35	IN/CS	07.50 03.500	-----	B HOT LEG RTE NOZ. SM X-AXIS PC 12 TO 7
B05.051.016	1PHB-14	OM-201-2296 ISI-OCN1-006		PT	NDE-35	IN/CS	07.50 03.500	-----	B HOT LEG RTE NOZ. SM Y-Z AXIS PC 12 TO 7
B05.051.017	1PHB-15	OM-201-2296 ISI-OCN1-006		PT	NDE-35	CS/IN	07.50 03.500	-----	B HOT LEG RTE NOZ SM Z-W AXIS PC 12 TO 7

DUKE POWER COMPANY
QUALITY ASSURANCE DEPARTMENT
PRE-SERVICE AND IN-SERVICE INSPECTION SYSTEM
OCONEE 1 INSERVICE INSPECTION LISTING OUTAGE 13

ITEM NUMBER	ID. NUMBER	DRAWING NUMBERS	LOCS.	INSP REQ.	PROC. NUMBERS	MATERIAL TYPE/GRADE	DIAM./ THICK	CALIB BLOCK	COMMENTS
B06.010.000	REACTOR VESSEL	CLOSURE HEAD NUTS*** **********		***	*******	*****	__.__ __.__	*****	********** **********
B06.010.001	1RPV-26-203-01	OM-201-2186 B&W 128723E3		MT	NDE-25	CS	09.25 01.300	-----	NUT
B06.010.007	1RPV-26-203-07	OM-201-2186 B&W 128723E3		MT	NDE-25	CS	09.25 01.300	-----	NUT
B06.010.008	1RPV-26-203-08	OM-201-2186 B&W 128723E3		MT	NDE-25	CS	09.25 01.300	-----	NUT
B06.010.009	1RPV-26-203-09	OM-201-2186 B&W 128723E3		MT	NDE-25	CS	09.25 01.300	-----	NUT
B06.010.010	1RPV-26-203-10	OM-201-2186 B&W 128723E3		MT	NDE-25	CS	09.25 01.300	-----	NUT
B06.010.011	1RPV-26-203-11	OM-201-2186 B&W 128723E3		MT	NDE-25	CS	09.25 01.300	-----	NUT
B06.010.012	1RPV-26-203-12	OM-201-2186 B&W 128723E3		MT	NDE-25	CS	09.25 01.300	-----	NUT

DUKE POWER COMPANY
QUALITY ASSURANCE DEPARTMENT
PRE-SERVICE AND IN-SERVICE INSPECTION SYSTEM
OCONEE 1 INSERVICE INSPECTION LISTING OUTAGE 13

ITEM NUMBER	ID. NUMBER	DRAWING NUMBERS	LOCS.	INSP REQ.	PROC. NUMBERS	MATERIAL TYPE/GRADE	DIAM./ THICK	CALIB BLOCK	COMMENTS
B06.010.013	1RPV-26-203-13	OM-201-2186 B&W 128723E3		MT	NDE-25	CS	09.25 01.300	-----	NUT
B06.010.014	1RPV-26-203-14	OM-201-2186 B&W 128723E3		MT	NDE-25	CS	09.25 01.300	-----	NUT
B06.010.020	1RPV-26-203-20	OM-201-2186 B&W 128723E3		MT	NDE-25	CS	09.25 01.300	-----	NUT
B06.010.021	1RPV-26-203-21	OM-201-2186 B&W 128723E3		MT	NDE-25	CS	09.25 01.300	-----	NUT
B06.010.022	1RPV-26-203-22	OM-201-2186 B&W 128723E3		MT	NDE-25	CS	09.25 01.300	-----	NUT
B06.010.028	1RPV-26-203-28	OM-201-2186 B&W 128723E3		MT	NDE-25	CS	09.25 01.300	-----	NUT
B06.010.029	1RPV-26-203-29	OM-201-2186 B&W 128723E3		MT	NDE-25	CS	09.25 01.300	-----	NUT
B06.010.030	1RPV-26-203-30	OM-201-2186 B&W 128723E3		MT	NDE-25	CS	09.25 01.300	-----	NUT

DUKE POWER COMPANY
QUALITY ASSURANCE DEPARTMENT
PRE-SERVICE AND IN-SERVICE INSPECTION SYSTEM
OCONEE 1 INSERVICE INSPECTION LISTING OUTAGE 13

ITEM NUMBER	ID. NUMBER	DRAWING NUMBERS	LOCS.	INSP REQ.	PROC. NUMBERS	MATERIAL TYPE/GRADE	DIAM./ THICK	CALIB BLOCK	COMMENTS
B06.010.031	1RPV-26-208-61	OM-201-2186 B&W 128723E3		MT	NDE-25	CS	09.25 01.300	-----	NUT
B06.010.032	1RPV-26-203-32	OM-201-2186 B&W 128723E3		MT	NDE-25	CS	09.25 01.300	-----	NUT
B06.010.033	1RPV-26-203-33	OM-201-2186 B&W 128723E3		MT	NDE-25	CS	09.25 01.300	-----	NUT
B06.010.034	1RPV-26-203-34	OM-201-2186 B&W 128723E3		MT	NDE-25	CS	09.25 01.300	-----	NUT
B06.010.045	1RPV-26-203-45	OM-201-2186 B&W 128723E3		MT	NDE-25	CS	09.25 01.300	-----	NUT
B06.010.046	1RPV-26-203-46	OM-201-2186 B&W 128723E3		MT	NDE-25	CS	09.25 01.300	-----	NUT
B06.010.047	1RPV-26-203-47	OM-201-2186 B&W 128723E3		MT	NDE-25	CS	09.25 01.300	-----	NUT
B06.010.048	1RPV-26-203-48	OM-201-2186 B&W 128723E3		MT	NDE-25	CS	09.25 01.300	-----	NUT

DUKE POWER COMPANY
QUALITY ASSURANCE DEPARTMENT
PRE-SERVICE AND IN-SERVICE INSPECTION SYSTEM
OCONEE 1 INSERVICE INSPECTION LISTING OUTAGE 13

ITEM NUMBER	ID. NUMBER	DRAWING NUMBERS	LOCS.	INSP REQ.	PROC. NUMBERS	MATERIAL TYPE/GRADE	DIAM./ THICK	CALIB BLOCK	COMMENTS
B06.010.049	1RPV-26-203-49	OM-201-2186 B&W 128723E3		MT	NDE-25	CS	09.25 01.300	-----	NUT
B06.010.050	1RPV-26-203-50	OM-201-2186 B&W 128723E3		MT	NDE-25	CS	09.25 01.300	-----	NUT
B06.010.051	1RPV-26-203-51	OM-201-2186 B&W 128723E3		MT	NDE-25	CS	09.25 01.300	-----	NUT
B06.010.052	1RPV-26-203-52	OM-201-2186 B&W 128723E3		MT	NDE-25	CS	09.25 01.300	-----	NUT
B06.010.053	1RPV-26-203-53	OM-201-2186 B&W 128723E3		MT	NDE-25	CS	09.25 01.300	-----	NUT
B06.010.054	1RPV-26-203-54	OM-201-2186 B&W 128723E3		MT	NDE-25	CS	09.25 01.300	-----	NUT
B06.010.060	1RPV-26-208-63	OM-201-2186 B&W 128723E3		MT	NDE-25	CS	09.25 01.300	-----	NUT
B06.030.000	REACTOR VESSEL	CLOSURE STUDS******* **********		***	*******	*****	__.__ __.__	*****	WHEN REMOVED********** **********

DUKE POWER COMPANY
QUALITY ASSURANCE DEPARTMENT
PRE-SERVICE AND IN-SERVICE INSPECTION SYSTEM
OCONEE 1 INSERVICE INSPECTION LISTING OUTAGE 13

ITEM NUMBER	ID. NUMBER	DRAWING NUMBERS	LOCS.	INSP REQ.	PROC. NUMBERS	MATERIAL TYPE/GRADE	DIAM./ THICK	CALIB BLOCK	COMMENTS
B06.030.001	1RPV-25-203-01	OM-201-2186 B&W 128723E3		UT	NDE-44	CS	06.50 63.250	40365	STUD
B06.030.001A	1RPV-25-203-01	OM-201-2186 B&W 128723E3		MT	NDE-25	CS	06.50 63.250	-----	STUD
B06.030.007	1RPV-25-203-07	OM-201-2186 B&W 128723E3		UT	NDE-44	CS	06.50 63.250	40365	STUD
B06.030.007A	1RPV-25-203-07	OM-201-2186 B&W 128723E3		MT	NDE-25	CS	06.50 63.250	-----	STUD
B06.030.008	1RPV-25-203-64	OM-201-2186 B&W 128723E3		UT	NDE-44	CS	06.50 63.250	40365	STUD
B06.030.008A	1RPV-25-203-64	OM-201-2186 B&W 128723E3		MT	NDE-25	CS	06.50 63.250	-----	STUD
B06.030.009	1RPV-25-203-09	OM-201-2186 B&W 128723E3		UT	NDE-44	CS	06.50 63.250	40365	STUD
B06.030.009A	1RPV-25-203-09	OM-201-2186 B&W 128723E3		MT	NDE-25	CS	06.50 63.250	-----	STUD

DUKE POWER COMPANY
QUALITY ASSURANCE DEPARTMENT
PRE-SERVICE AND IN-SERVICE INSPECTION SYSTEM
OCONEE 1 INSERVICE INSPECTION LISTING OUTAGE 13

ITEM NUMBER	ID. NUMBER	DRAWING NUMBERS	LOCS.	INSP REQ.	PROC. NUMBERS	MATERIAL TYPE/GRADE	DIAM./ THICK	CALIB BLOCK	COMMENTS
B06.030.010	1RPV-25-203-10	OM-201-2186 B&W 128723E3		UT	NDE-44	CS	06.50 63.250	40365	STUD
B06.030.010A	1RPV-25-203-10	OM-201-2186 B&W 128723E3		MT	NDE-25	CS	06.50 63.250	-----	STUD
B06.030.011	1RPV-25-203-11	OM-201-2186 B&W 128723E3		UT	NDE-44	CS	06.50 63.250	40365	STUD
B06.030.011A	1RPV-25-203-11	OM-201-2186 B&W 128723E3		MT	NDE-25	CS	06.50 63.250	-----	STUD
B06.030.012	1RPV-25-203-12	OM-201-2186 B&W 128723E3		UT	NDE-44	CS	06.50 63.250	40365	STUD
B06.030.012A	1RPV-25-203-12	OM-201-2186 B&W 128723E3		MT	NDE-25	CS	06.50 63.250	-----	STUD
B06.030.013	1RPV-25-203-13	OM-201-2186 B&W 128723E3		UT	NDE-44	CS	06.50 63.250	40365	STUD
B06.030.013A	1RPV-25-203-13	OM-201-2186 B&W 128723E3		MT	NDE-25	CS	06.50 63.250	-----	STUD

DUKE POWER COMPANY
QUALITY ASSURANCE DEPARTMENT
PRE-SERVICE AND IN-SERVICE INSPECTION SYSTEM
OCONEE 1 INSERVICE INSPECTION LISTING OUTAGE 13

ITEM NUMBER	ID. NUMBER	DRAWING NUMBERS	LOCS.	INSP REQ.	PROC. NUMBERS	MATERIAL TYPE/GRADE	DIAM./ THICK	CALIB BLOCK	COMMENTS
B06.030.014	1RPV-25-203-14	OM-201-2186 B&W 128723E3		UT	NDE-44	CS	06.50 63.250	40365	STUD
B06.030.014A	1RPV-25-203-14	OM-201-2186 B&W 128723E3		MT	NDE-25	CS	06.50 63.250	-----	STUD
B06.030.020	1RPV-25-203-20	OM-201-2186 B&W 128723E3		UT	NDE-44	CS	06.50 63.250	40365	STUD
B06.030.020A	1RPV-25-203-20	OM-201-2186 B&W 128723E3		MT	NDE-25	CS	06.50 63.250	-----	STUD
B06.030.021	1RPV-25-203-21	OM-201-2186 B&W 128723E3		UT	NDE-44	CS	06.50 63.250	40365	STUD
B06.030.021A	1RPV-25-203-21	OM-201-2186 B&W 128723E3		MT	NDE-25	CS	06.50 63.250	-----	STUD
B06.030.022	1RPV-25-203-22	OM-201-2186 B&W 128723E3		UT	NDE-44	CS	06.50 63.250	40365	STUD
B06.030.022A	1RPV-25-203-22	OM-201-2186 B&W 128723E3		MT	NDE-25	CS	06.50 63.250	-----	STUD

DUKE POWER COMPANY
QUALITY ASSURANCE DEPARTMENT
PRE-SERVICE AND IN-SERVICE INSPECTION SYSTEM
OCONEE 1 INSERVICE INSPECTION LISTING OUTAGE 13

ITEM NUMBER	ID. NUMBER	DRAWING NUMBERS	LOCS.	INSP REQ.	PROC. NUMBERS	MATERIAL TYPE/GRADE	DIAM./ THICK	CALIB BLOCK	COMMENTS
B06.030.028	1RPV-25-203-63	OM-201-2186 B&W 128723E3		UT	NDE-44	CS	06.50 63.250	40365	STUD
B06.030.028A	1RPV-25-203-63	OM-201-2186 B&W 128723E3		MT	NDE-25	CS	06.50 63.250	-----	STUD
B06.030.029	1RPV-25-203-29	OM-201-2186 B& 128723E3		UT	NDE-44	CS	06.50 63.250	40365	STUD
B06.030.029A	1RPV-25-203-29	OM-201-2186 B&W 128723E3		MT	NDE-25	CS	06.50 63.250	-----	STUD
B06.030.030	1RPV-25-203-30	OM-201-2186 B& 128723E3		UT	NDE-44	CS	06.50 63.250	40365	STUD
B06.030.030A	1RPV-25-203-30	OM-201-2186 B&W 128723E3		MT	NDE-25	CS	06.50 63.250	-----	STUD
B06.030.031	1RPV-25-209-61	OM-201-2186 B& 128723E3		UT	NDE-44	CS	06.50 63.250	40365	STUD
B06.030.031A	1RPV-25-209-61	OM-201-2186 B&W 128723E3		MT	NDE-25	CS	06.50 63.250	-----	STUD

DUKE POWER COMPANY
QUALITY ASSURANCE DEPARTMENT
PRE-SERVICE AND IN-SERVICE INSPECTION SYSTEM
OCONEE 1 INSERVICE INSPECTION LISTING OUTAGE 13

ITEM NUMBER	ID. NUMBER	DRAWING NUMBERS	LOCS.	INSP REQ.	PROC. NUMBERS	MATERIAL TYPE/GRADE	DIAM./ THICK	CALIB BLOCK	COMMENTS
B06.030.032	1RPV-25-203-32	OM-201-2186 B& 128723E3		UT	NDE-44	CS	06.50 63.250	40365	STUD
B06.030.032A	1RPV-25-203-32	OM-201-2186 B&W 128723E3		MT	NDE-25	CS	06.50 63.250	-----	STUD
B06.030.033	1RPV-25-203-33	OM-201-2186 B& 128723E3		UT	NDE-44	CS	06.50 63.250	40365	STUD
B06.030.033A	1RPV-25-203-33	OM-201-2186 B&W 128723E3		MT	NDE-25	CS	06.50 63.250	-----	STUD
B06.030.034	1RPV-25-203-34	OM-201-2186 B& 128723E3		UT	NDE-44	CS	06.50 63.250	40365	STUD
B06.030.034A	1RPV-25-203-34	OM-201-2186 B&W 128723E3		MT	NDE-25	CS	06.50 63.250	-----	STUD
B06.030.045	1RPV-25-203-45	OM-201-2186 B&W 128723E3		UT	NDE-44	CS	06.50 63.250	40365	STUD
B06.030.045A	1RPV-25-203-45	OM-201-2186 B&W 128723E3		MT	NDE-25	CS	06.50 63.250	-----	STUD

DUKE POWER COMPANY
QUALITY ASSURANCE DEPARTMENT
PRE-SERVICE AND IN-SERVICE INSPECTION SYSTEM
OCONEE 1 INSERVICE INSPECTION LISTING OUTAGE 13

ITEM NUMBER	ID. NUMBER	DRAWING NUMBERS	LOCS.	INSP REQ.	PROC. NUMBERS	MATERIAL TYPE/GRADE	DIAM./ THICK	CALIB BLOCK	COMMENTS
B06.030.046	1RPV-25-203-46	OM-201-2186 B&W 128723E3		UT	NDE-44	CS	06.50 63.250	40365	STUD
B06.030.046A	1RPV-25-203-46	OM-201-2186 B&W 128723E3		MT	NDE-25	CS	06.50 63.250	-----	STUD
B06.030.047	1RPV-25-203-47	OM-201-2186 B&W 128723E3		UT	NDE-44	CS	06.50 63.250	40365	STUD
B06.030.047A	1RPV-25-203-47	OM-201-2186 B&W 128723E3		MT	NDE-25	CS	06.50 63.250	-----	STUD
B06.030.048	1RPV-25-203-48	OM-201-2186 B&W 128723E3		UT	NDE-44	CS	06.50 63.250	40365	STUD
B06.030.048A	1RPV-25-203-48	OM-201-2186 B&W 128723E3		MT	NDE-25	CS	06.50 63.250	-----	
B06.030.049	1RPV-25-203-49	OM-201-2186 B&W 128723E3		UT	NDE-44	CS	06.50 63.250	40365	STUD
B06.030.049A	1RPV-25-203-49	OM-201-2186 B&W 128723E3		MT	NDE-25	CS	06.50 63.250	-----	STUD

ITEM NUMBER	ID. NUMBER	DRAWING NUMBERS	LOCS.	INSP REQ.	PROC. NUMBERS	MATERIAL TYPE/GRADE	DIAM./ THICK	CALIB BLOCK	COMMENTS
B06.030.050	1RPV-25-203-50	OM-201-2186 B&W 128723E3		UT	NDE-44	CS	06.50 63.250	40365	STUD
B06.030.050A	1RPV-25-203-50	OM-201-2186 B&W 128723E3		MT	NDE-25	CS	06.50 63.250	-----	STUD
B06.030.051	1RPV-25-203-51	OM-201-2186 B&W 128723E3		UT	NDE-44	CS	06.50 63.250	40365	STUD
B06.030.051A	1RPV-25-203-51	OM-201-2186 B&W 128723E3		MT	NDE-25	CS	06.50 63.250	-----	STUD
B06.030.052	1RPV-25-203-52	OM-201-2186 B&W 128723E3		UT	NDE-44	CS	06.50 63.250	40365	STUD
B06.030.052A	1RPV-25-203-52	OM-201-2186 B&W 128723E3		MT	NDE-25	CS	06.50 63.250	-----	STUD
B06.030.053	1RPV-25-203-53	OM-201-2186 B&W 128723E3		UT	NDE-44	CS	06.50 63.250	40365	STUD
B06.030.053A	1RPV-25-203-53	OM-201-2186 B&W 128723E3		MT	NDE-25	CS	06.50 63.250	-----	STUD

ITEM NUMBER	ID. NUMBER	DRAWING NUMBERS	LOCS.	INSP REQ.	PROC. NUMBERS	MATERIAL TYPE/GRADE	DIAM./ THICK	CALIB BLOCK	COMMENTS
B06.030.054	1RPV-25-203-54	OM-201-2186 B&W 128723E3		UT	NDE-44	CS	06.50 63.250	40365	STUD
B06.030.054A	1RPV-25-203-54	OM-201-2186 B&W 128723E3		MT	NDE-25	CS	06.50 63.250	-----	STUD
B06.030.060	1RPV-25-209-69	OM-201-2186 B&W 128723E3		UT	NDE-44	CS	06.50 63.250	40365	STUD
B06.030.060A	1RPV-25-209-69	OM-201-2186 B&W 128723E3		MT	NDE-25	CS	06.50 63.250	-----	STUD
B06.040.000	REACTOR VESSEL	THREADS IN FLANGE*** **********		***	*******	*****	__.__ __.__	*****	********** **********
B06.050.000	REACTOR VESSEL	CLOSURE WASHERS AND* BUSHINGS**********		***	*******	*****	__.__ __.__	*****	********** **********
B06.050.001C	1RPV-WASH-BUSH	B&W 128723E3		VT1	QAL-13	CS	__.__ __.__	-----	STUD HOLES 20-22,28-34,45-54, AND 60
B06.060.000	***PRESSURIZER	BOLTING********** **********		***	*******	*****	__.__ __.__	*****	********** **********

ITEM NUMBER	ID. NUMBER	DRAWING NUMBERS	LOCS.	INSP REQ.	PROC. NUMBERS	MATERIAL TYPE/GRADE	DIAM./ THICK	CALIB BLOCK	COMMENTS
B06.070.000	***PRESSURIZER	FLANGE SURFACES***** **********		***	*******	*****	__.__ __.__	*****	INSPECT WHEN CONNECTION DISASSEMBLED
B06.080.000	***PRESSURIZER	NUTS, BUSHINGS, AND WASHERS**********		***	*******	*****	__.__ __.__	*****	********** **********
B06.180.000	*CLASS 1 PUMPS	BOLTS AND STUDS***** **********		***	*******	*****	__.__ __.__	*****	GREATER THAN 2 INCH********** **********
B06.180.001	1RCP-1A1-F	OM-201D-34 ----------		UT	NDE-44	CS	04.32 28.000	50360	A1 RC PUMP MN FLG BOLTS PC. 19 TOTAL 24 BOLTS
B06.180.002	1RCP-1A2-F	OM-201D-34 ----------		UT	NDE-44	CS	04.32 28.000	50360	A2 RC PUMP MN FLG BOLTS PC. 19 TOTAL 24 BOLTS
B06.180.003	1RCP-1B1-F	OM-201D-34 ----------		UT	NDE-44	CS	04.32 28.000	50360	B1 RC PUMP MN FLG BOLTS PC. 19 TOTAL 24 BOLTS
B06.180.004	1RCP-1B2-F	OM-201D-34 ----------		UT	NDE-44	CS	04.32 28.000	50360	B2 RC PUMP MN FLG BOLTS PC. 19 TOTAL 24 BOLTS
B06.190.000	*CLASS 1 PUMPS	FLANGE SURFACE****** **********		***	*******	*****	__.__ __.__	*****	WHEN CONNECTION DISASSEMBLED** **********

DUKE POWER COMPANY
QUALITY ASSURANCE DEPARTMENT
PRE-SERVICE AND IN-SERVICE INSPECTION SYSTEM
OCONEE 1 INSERVICE INSPECTION LISTING OUTAGE 13

ITEM NUMBER	ID. NUMBER	DRAWING NUMBERS	LOCS.	INSP REQ.	PROC. NUMBERS	MATERIAL TYPE/GRADE	DIAM./ THICK	CALIB BLOCK	COMMENTS
B06.200.000	*CLASS 1 PUMPS	NUTS, BUSHINGS, AND WASHERS**********	_____ _____ _____	***	******* _____	***** _____	__.__ __.__	*****	********** ********** _____ _____

DUKE POWER COMPANY
QUALITY ASSURANCE DEPARTMENT
PRE-SERVICE AND IN-SERVICE INSPECTION SYSTEM
OCONEE 1 INSERVICE INSPECTION LISTING OUTAGE 13

ITEM NUMBER	ID. NUMBER	DRAWING NUMBERS	LOCS.	INSP REQ.	PROC. NUMBERS	MATERIAL TYPE/GRADE	DIAM./ THICK	CALIB BLOCK	COMMENTS
B07.020.000	***PRESSURIZER	BOLTS,STUDS,AND NUTS **********		***	*******	*****	__.__ __.___	*****	********** **********
B07.020.003	1PZR-LHB-STUDS	OM-201-1262 ----------		VT1	QAL-13	CS	02.00 17.900	-----	LOWER 16 HTR BUNDLE STUDS
B07.030.000	*********STEAM	GENERATOR********** BOLTS,STUDS,AND NUTS		***	*******	*****	__.__ __.___	*****	********** **********
B07.030.003	1SGB-UMW-BOLTS	OM-201-352 ----------		VT1	QAL-13	CS	02.00 11.500	-----	1B SG UPPER HEAD MANWAY STUDS & NUTS, 16 STUDS & NUTS
B07.030.004	1SGB-LMW-BOLTS	OM-201-352 ----------		VT1	QAL-13	CS	02.00 11.500	-----	1B SG LOWER HEAD MANWAY STUDS & NUTS, 16 STUDS & NUTS
B07.030.007	1SGB-UH-BOLTS	OM-201-352 ----------		VT1	QAL-13	CS	01.00	-----	1B SG UPPER HEAD INSP COVER BOLTING
B07.030.008	1SGB-LH-BOLTS	OM-201-352 ----------		VT1	QAL-13	CS	01.00	-----	1B SG LOWER HEAD INSP COVER BOLTING
B07.060.000	*CLASS 1 PUMPS	BOLTS,STUDS,AND NUTS **********		***	*******	*****	__.__ __.___	*****	********** **********

DUKE POWER COMPANY
QUALITY ASSURANCE DEPARTMENT
PRE-SERVICE AND IN-SERVICE INSPECTION SYSTEM
OCONEE 1 INSERVICE INSPECTION LISTING OUTAGE 13

ITEM NUMBER	ID. NUMBER	DRAWING NUMBERS	LOCS.	INSP REQ.	PROC. NUMBERS	MATERIAL TYPE/GRADE	DIAM./ THICK	CALIB BLOCK	COMMENTS
B07.060.003	1RCP-1B1-S	OM-201D-34		VT1	QAL-13	CS	02.00 08.000	-----	PC. 26 LWR SEAL HOUSING BOLTS 12 CAP SCREWS
B07.060.004	1RCP-1B2-S	OM-201D-34		VT1	QAL-13	CS	02.00 08.000	-----	PC. 26 LWR SEAL HOUSING BOLTS 12 CAP SCREWS
B07.070.000	CLASS 1 VALVES	BOLTS,STUDS,AND NUTS		***	*******	*****	__.__	*****	**********
B07.070.001	1-53A-CF11	OM-245-001		VT1	QAL-13	-----	__.__	-----	A-SIDE CORE FLOOD (W-AXIS) VALVE BOLTING VALVE CF-11
B07.070.002	1-53A-CF12	OM-245-001		VT1	QAL-13	-----	__.__	-----	A-SIDE CORE FLOOD (W-AXIS) VALVE BOLTING VALVE CF-12
B07.070.003	1-53A-CF13	OM-245-001		VT1	QAL-13	-----	__.__	-----	B-SIDE CORE FLOOD (Y-AXIS) VALVE BOLTING VALVE CF-13
B07.070.004	1-53A-CF14	OM-245-001		VT1	QAL-13	-----	__.__	-----	B-SIDE CORE FLOOD (Y-AXIS) VALVE BOLTING VALVE CF-14
B07.070.006	1-53A-LP48	OM-245-001		VT1	QAL-13	-----	__.__	-----	10 B-SIDE LPI VALVE BOLTING VALVE LP-48

DUKE POWER COMPANY
QUALITY ASSURANCE DEPARTMENT
PRE-SERVICE AND IN-SERVICE INSPECTION SYSTEM
OCONEE 1 INSERVICE INSPECTION LISTING OUTAGE 13

ITEM NUMBER	ID. NUMBER	DRAWING NUMBERS	LOCS.	INSP REQ.	PROC. NUMBERS	MATERIAL TYPE/GRADE	DIAM./ THICK	CALIB BLOCK	COMMENTS
B07.080.000	**CRD HOUSINGS	BOLTS,STUDS,AND NUTS **********		***	*******	*****	__.__	*****	INSPECT ONLY IF HOUSING IS**** DISASSEMBLED**********
B07.080.001	1RPV CRD-BOLTS	DPS 706599-1056 OM-201-2248		VT1	QAL-13	CS	__.__	-----	8 BOLTS PER CRD HOUSING REQUEST FOR RELIEF ONS-0012 2 CONN. INSP. TO DATE, #38,59 CONN. #59 INSP. RFO 13
B07.080.002	1RPV CRD-RINGS	DPS 706599-1056 OM-201-2248		VT1	QAL-13	CS	__.__	-----	1 PAIR PER CRD HOUSING REQUEST FOR RELIEF ONS-0012 2 INSP. INSP. TO DATE,#38,#59 CONN # 59 INSP. RFO 13

ITEM NUMBER	ID. NUMBER	DRAWING NUMBERS	LOCS.	INSP REQ.	PROC. NUMBERS	MATERIAL TYPE/GRADE	DIAM./ THICK	CALIB BLOCK	COMMENTS
B08.010.000	REACTOR VESSEL	INTEGRALLY WELDED ATTACHMENTS*********		***	*******	*****	__.__	*****	********** **********
B08.010.001	1RPV-HD-LUG-A	OM-201-1122		MT	NDE-25	CS	05.625		REACTOR CLOSURE HEAD LUG AT Y-AXIS
B08.010.002	1RPV-HD-LUG-B	OM-201-1122		MT	NDE-25	CS	05.625		REACTOR CLOSURE HEAD LUG BET. W-X AXIS NEAREST X AXIS
B08.010.003	1RPV-HD-LUG-C	OM-201-1122		MT	NDE-25	CS	05.625		REACTOR CLOSURE HEAD LUG BET. W-Z AXIS NEAREST Z AXIS
B08.020.000	***PRESSURIZER	INTEGRALLY WELDED*** ATTACHMENTS*********		***	*******	*****	__.__	*****	********** **********
B08.020.001	1PZR-WP82-X	OM-201-637 ISI-OCN1-002		MT	NDE-25	CS	03.500	-----	PZR SUPPORT LUG X-AXIS
B08.020.002	1PZR-WP82-XY	OM-201-637 ISI-OCN1-002		MT	NDE-25	CS	03.500	-----	PZR SUPPORT LUG X-Y AXIS INSP. RFO 13 PER IWB-2420(B)
B08.020.003	1PZR-WP82-Y	OM-201-637 ISI-OCN1-002		MT	NDE-25	CS	03.500	-----	PZR SUPPORT LUG Y AXIS INSP. RFO 13 PER IWB-2420(B)

DUKE POWER COMPANY
QUALITY ASSURANCE DEPARTMENT
PRE-SERVICE AND IN-SERVICE INSPECTION SYSTEM
OCONEE 1 INSERVICE INSPECTION LISTING OUTAGE 13

ITEM NUMBER	ID. NUMBER	DRAWING NUMBERS	LOCS.	INSP REQ.	PROC. NUMBERS	MATERIAL TYPE/GRADE	DIAM./ THICK	CALIB BLOCK	COMMENTS
B08.020.004	1PZR-WP82-YZ	OM-201-637 ISI-OCN1-002		MT	NDE-25	CS	03.500	-----	PZR SUPPORT LUG Y-Z AXIS INSP. RFO 13 PER IWB-2420(B)
B08.020.007	1PZR-WP82-W	OM-201-637 ISI-OCN1-002		MT	NDE-25	CS	03.500	-----	PZR SUPPORT LUG W-AXIS INSP. RFO 13 PER IWB-2420(B)
B08.020.008	1PZR-WP82-WX	OM-201-637 ISI-OCN1-002		MT	NDE-25	CS	03.500	-----	PZR SUPPORT LUG W-X AXIS
B08.030.000	STEAM GEN.	***INTEGRALLY WELDED ATTACHMENTS*********		***	*******	*****	__.__	*****	**********

DUKE POWER COMPANY
QUALITY ASSURANCE DEPARTMENT
PRE-SERVICE AND IN-SERVICE INSPECTION SYSTEM
OCONEE 1 INSERVICE INSPECTION LISTING OUTAGE 13

ITEM NUMBER	ID. NUMBER	DRAWING NUMBERS	LOCS.	INSP REQ.	PROC. NUMBERS	MATERIAL TYPE/GRADE	DIAM./ THICK	CALIB BLOCK	COMMENTS
B09.011.000	********** PIPING	CIRCUMFERENTIAL***** WELDS**********		***	*******	*****	__.__ __.__	*****	NOMINAL PIPE SIZE 4 IN. & OVER **********
B09.011.003	1PIA1-6	OM-201-1845 ISI-OCN1-007		UT	NDE-600	CS	33.00 03.000	40350	ADDED PER IWB 2430(A) SEE REQUEST FOR RELIEF ONS-003 ADDED PER IWB-2430(A)
B09.011.003A	1PIA1-6	OM-201-1845 ISI OCN1-007		MT	NDE-25	CS	33.00 03.000	-----	ADDED PER IWB 2430(A) ADDED PER IWB-2430(A)
B09.011.016	1PDA1-9	B&W 131913E11 ISI-OCN1-011		UT	NDE-600 ISI-138	CS	33.50 03.000	40350	A1 TERMINAL END PC. 38 TO 18
B09.011.019	1PIA2-6	OM-201-1845 ISI-OCN1-008		UT	NDE-600	CS	33.00 03.000	40350	ADDED PER IWB 2430(A) SEE REQUEST FOR RELIEF ONS-003 ADDED PER IWB-2430(A)
B09.011.019A	1PIA2-6	OM-201-1845 ISI-OCN1-008		MT	NDE-25	CS	33.00 03.000	-----	ADDED PER IWB 2430(A) ADDED PER IWB-2430(A)
B09.011.021	1PIA2-4	OM-201-1845 ISI-OCN1-008		UT	NDE-600	CS	33.00 03.000	40350	ADDED PER IWB 2430(A) SEE REQUEST FOR RELIEF ONS-003 ADDED PER IWB-2430(A)
B09.011.021A	1PIA2-4	ISI-OCN1-008 OM-201-1845		MT	NDE-25	CS	33.00 03.000	-----	ADDED PER IWB 2430(A) ADDED PER IWB-2430(A)

DUKE POWER COMPANY
QUALITY ASSURANCE DEPARTMENT
PRE-SERVICE AND IN-SERVICE INSPECTION SYSTEM
OCONEE 1 INSERVICE INSPECTION LISTING OUTAGE 13

ITEM NUMBER	ID. NUMBER	DRAWING NUMBERS	LOCS.	INSP REQ.	PROC. NUMBERS	MATERIAL TYPE/GRADE	DIAM./ THICK	CALIB BLOCK	COMMENTS
B09.011.022	1PIA2-3	OM-201-1845 ISI-OCN1-008		UT	NDE-600	CS	33.00 03.000	40350	ADDED PER IWB 2430(A) SEE REQUEST FOR RELIEF ONS-003 ADDED PER IWB-2430(A)
B09.011.022A	1PIA2-3	ISI-OCN1-008 OM-201-1845		MT	NDE-25	CS	33.00 03.000	-----	ADDED PER IWB 2430(A) ADDED PER IWB-2430(A)
B09.011.032	1PDA2-9	B&W 131914E6 ISI-OCN1-012		UT	NDE-600 ISI-138	CS	33.50 03.000	40350	A2 TERMINAL END PC. 38 TO 18
B09.011.035	1PIB1-6	B&W 131914E6 ISI-OCN1-009		UT	NDE-600	CS	33.00 03.000	40350	ADDED PER IWB 2430(A) SEE REQUEST FOR RELIEF ONS-003 ADDED PER IWB-2430(A)
B09.011.035A	1PIB1-6	B&W 131914E6 ISI-OCN1-009		MT	NDE-25	CS	33.00 03.000	-----	ADDED PER IWB 2430(A) ADDED PER IWB-2430(A)
B09.011.036	1PIB1-5	B&W 131914E6 ISI-OCN1-009		UT	NDE-600	CS	33.50 03.000	40350	PER 1-091-0085 SEE REQUEST FOR RELIEF ONS-003 PIR 1-091-0085
B09.011.036A	1PIB1-5	B&W 131914E6 ISI-OCN-009		MT	NDE-25	CS	33.50 03.000	-----	B1 CIRCLE SEAM PC 57 TO 62
B09.011.037	1PIB1-4	B&W 131914E6 ISI-OCN1-009		UT	NDE-600	CS	33.00 03.000	40350	ADDED PER IWB 2430(A) SEE REQUEST FOR RELIEF ONS-003 ADDED PER IWB-2430(A)

DUKE POWER COMPANY
QUALITY ASSURANCE DEPARTMENT
PRE-SERVICE AND IN-SERVICE INSPECTION SYSTEM
OCONEE 1 INSERVICE INSPECTION LISTING OUTAGE 13

ITEM NUMBER	ID. NUMBER	DRAWING NUMBERS	LOCS.	INSP REQ.	PROC. NUMBERS	MATERIAL TYPE/GRADE	DIAM./ THICK	CALIB BLOCK	COMMENTS
B09.011.037A	1PIB1-4	B&W 131914E6 ISI-OCN1-009		MT	NDE-25	CS	33.00 03.000	-----	ADDED PER IWB 2430(A)
B09.011.038	1PIB1-3	B&W 131914E6 ISI-OCN1-009		UT	NDE-600	CS	33.00 03.000	40350	ADDED PER IWB 2430(A) SEE REQUEST FOR RELIEF ONS-003 ADDED PER IWB-2430(A)
B09.011.038A	1PIB1-3	B&W 131914E6 ISI-OCN1-009		MT	NDE-25	CS	33.00 03.000	-----	ADDED PER IWB 2430(A) ADDED PER IWB-2430(A)
B09.011.040	1PIB1-1	B&W 131914E6 ISI OCN1-009		UT	NDE-600	CS	33.50 03.000	40350	B1 TERMINAL END PC 67 TO 65 SEE REQUEST FOR RELIEF ONS-003
B09.011.040A	1PIB1-1	B&W 131914E6 ISI-OCN1-009		MT	NDE-25	CS	33.50 03.000	-----	B1 TERMINAL END PC 67 TO 65
B09.011.048	1PDB1-9	OM-201-581 ISI OCN1-013		UT	NDE-600 ISI-138	CS	33.50 03.000	40350	B1 TERMINAL END PC. 38 TO 18
B09.011.051	1PIB2-6	OM-201-1845 ISI OCN1-010		UT	NDE-600	CS	33.00 03.000	40350	ADDED PER IWB 2430(A) SEE REQUEST FOR RELIEF ONS-003 ADDED PER IWB-2430(A)
B09.011.051A	1PIB2-6	OM-201-1845 ISI-OCN1-010		MT	NDE-25	CS	33.00 03.000	-----	ADDED PER IWB 2430(A) ADDED PER IWB-2430(A)

ITEM NUMBER	ID. NUMBER	DRAWING NUMBERS	LOCS.	INSP REQ.	PROC. NUMBERS	MATERIAL TYPE/GRADE	DIAM./ THICK	CALIB BLOCK	COMMENTS
B09.011.052	1PIB2-5	OM-201-1845 ISI OCN1-010		UT	NDE-600	CS	33.00 03.000	40350	ADDED PER IWB 2430(A) SEE REQUEST FOR RELIEF ONS-003 ADDED PER IWB-2430(A)
B09.011.052A	1PIB2-5	OM-201-1845 ISI OCN1-010		MT	NDE-25	CS	33.00 03.000	-----	ADDED PER IWB 2430(A) ADDED PER IWB-2430(A)
B09.011.053	1PIB2-4	OM-201-1845 ISI OCN1-010		UT	NDE-600	CS	33.00 03.000	40350	ADDED PER IWB 2430(A) SEE REQUEST FOR RELIEF ONS-003 ADDED PER IWB-2430(A)
B09.011.053A	1PIB2-4	OM-201-1845 ISI OCN1-010		MT	NDE-25	CS	33.00 03.000	-----	ADDED PER IWB 2430(A) ADDED PER IWB-2430(A)
B09.011.054	1PIB2-3	OM-201-1845 ISI OCN1-010		UT	NDE-600	CS	33.00 03.000	40350	ADDED PER IWB 2430(A) SEE REQUEST FOR RELIEF ONS-003 ADDED PER IWB-2430(A)
B09.011.054A	1PIB2-3	OM-201-1845 ISI OCN1-010		MT	NDE-25	CS	33.00 03.000	-----	ADDED PER IWB 2430(A) ADDED PER IWB-2430(A)
B09.011.056	1PIB2-1	B&W 131914E6 ISI OCN1-010		UT	NDE-600	CS	33.50 03.000	40350	B2 TERMNAL END PC 67 TO STM GN SEE REQUEST FOR RELIEF ONS-003
B09.011.056A	1PIB2-1	B&W 131914E6 ISI OCN1-010		MT	NDE-25	CS	33.50 03.000	-----	B2 TERMNAL END PC 67 TO STM GN PC 67 TO STEAM GEN.

DUKE POWER COMPANY
QUALITY ASSURANCE DEPARTMENT
PRE-SERVICE AND IN-SERVICE INSPECTION SYSTEM
OCONEE 1 INSERVICE INSPECTION LISTING OUTAGE 13

ITEM NUMBER	ID. NUMBER	DRAWING NUMBERS	LOCS.	INSP REQ.	PROC. NUMBERS	MATERIAL TYPE/GRADE	DIAM./ THICK	CALIB BLOCK	COMMENTS
B09.011.064	1PDB2-9	OM-201-581 ISI OCN1-014		UT	NDE-600 ISI-138	CS	33.50 03.000	40350	B2 TERMINAL END PC. 38 TO 18
B09.011.065	1PHA-1	OM-201-583 ISI OCN1-005		UT	NDE-600 ISI-138	CS	42.75 03.000	40350	A HOT LEG T.E. PC. 19 TO 32 CAL. BLOCK 40340
B09.011.076	1PHA-12	OM-201-583 ISI OCN1-005		UT	NDE-600	CS	42.75 03.000	40350	A HOT LEG TERMINAL END PC 36 TO 70 REQ. FOR REL. ONS-003
B09.011.076A	1PHA-12	OM-201-583 ISI OCN1-005		MT	NDE-25	CS	42.75 03.000	-----	A HOT LEG TERMINAL END PC 36 TO 70
B09.011.077	1PHB-1	OM-201-583 ISI OCN1-006		UT	NDE-600 ISI-138	CS	42.75 03.000	40350	B HOT LEG T.E. PC. 19 TO 32 CAL. BLOCK 40340
B09.011.088	1PHB-12	OM-201-583 ISI-OCN1-006		UT	NDE-600	CS	42.75 03.000	40350	B HOT LEG TERMINAL END PC 36 TO 70 REQ. FOR REL. ONS-003
B09.011.088A	1PHB-12	OM-201-583 ISI OCN1-006		MT	NDE-25	CS	42.75 03.000	-----	B HOT LEG TERMAINAL END PC 36 TO 70
B09.011.090	1-53A-2.3-43L	SYS 53A ISO 2 P3		UT	NDE-600 ISI-138	SS	14.00 01.250	40389	A SIDE CORE FLOOD W-AXIS SE TO PIPE PC 89 TO PIPE

DUKE POWER COMPANY
QUALITY ASSURANCE DEPARTMENT
PRE-SERVICE AND IN-SERVICE INSPECTION SYSTEM
OCONEE 1 INSERVICE INSPECTION LISTING OUTAGE 13

ITEM NUMBER	ID. NUMBER	DRAWING NUMBERS	LOCS.	INSP REQ.	PROC. NUMBERS	MATERIAL TYPE/GRADE	DIAM./ THICK	CALIB BLOCK	COMMENTS
B09.011.100	1-53A-1.2-1L	SYS 53A ISO 1 P2		UT	NDE-600 ISI-138	SS	14.00 01.250	40389	B SIDE CORE FLOOD Y-AXIS RV NOZZLE SAFE END TO PIPE
B09.011.111	1-53A-3-8A	SYS 53A ISO 3		UT	NDE-600	SS	12.75 01.125	40413	DECAY HEAT SUCTION
B09.011.111A	1-53A-3-8A	SYS 53A ISO 3		PT	NDE-35	SS	12.75 01.125	-----	DECAY HEAT SUCTION
B09.012.000	********** PIPING	LONGITUDINAL******** WELDS**********		***	*******	*****	__.__ __.__	*****	NOMINAL PIPE SIZE 4 IN. & OVER **********
B09.012.025	1PIB1-62LI	B&W 131914E6 ISI OCN1-009		UT	NDE-600	CS	33.50 03.000	40350	B1 LONG. SEAM PC 62R TO 62L SEE REQUST FOR RELIEF ONS-003
B09.012.025A	1PIB1-62LI	B&W 131914E6 ISI-OCN1-009		MT	NDE-25	CS	33.50 03.000	-----	M
B09.012.026	1PIB1-62LO	B&W 131914E6 ISI OCN1-009		UT	NDE-600	CS	33.50 03.000	40350	B1 LONG SEAM PC 62L TO 62R SEE REQUEST FOR RELIEF ONS-003
B09.012.026A	1PIB1-62LO	B&W 131914E6 ISI OCN1-009		MT	NDE-25	CS	33.50 03.000	-----	B1 LONG SEAM PC 62L TO 62R

ITEM NUMBER	ID. NUMBER	DRAWING NUMBERS	LOCS.	INSP REQ.	PROC. NUMBERS	MATERIAL TYPE/GRADE	DIAM./ THICK	CALIB BLOCK	COMMENTS
B09.012.029	1PDB1-212LO	OM-201-1844 ISI OCN1-013		UT	NDE-600	CS	34.75 03.000	40350	B1 LONG SEAM PC 212R TO 212L SEE REQUEST FOR RELIEF ONS-003
B09.012.029A	1PDB1-212LO	OM-201-1844 ISI-OCN1-013		MT	NDE-25	CS	34.75 03.000	-----	B1 DISCHARGE OUTSIDE LONG SEAM PC 212R TO 212L
B09.012.030	1PDB1-212LI	OM-201-1844 ISI OCN1-013		UT	NDE-600	CS	34.75 03.000	40350	B1 LONG SEAM PC 212L TO 212R SEE REQUEST FOR RELIEF ONS-003
B09.012.030A	1PDB1-212LI	OM-201-1844 ISI-OCN1-013		MT	NDE-25	CS	34.75 03.000	-----	B1 DISCHARGE INSIDE LONG SEAM PC 212L TO 212R
B09.021.000	********** PIPING	CIRCUMFERENTIAL***** WELDS**********		***	*******	*****	__.__ __.___	*****	NOMINAL PIPE SIZE ********** 4 IN. & SMALLER **********
B09.021.003	1PSP-11	ISI-OCN1-016 SYS 50 ISO 03 P1		PT	NDE-35	SS	02.88 00.400	-----	DUKE WELD #1-50-3.1-25C
B09.021.004	1PSP-12	ISI-OCN1-016 SYS 50 ISO 03 P1		PT	NDE-35	SS	02.88 00.400	-----	DUKE WELD #1-50-3.1-24C
B09.021.009	1-51A-11-88	SYS 51A ISO 11 P3		PT	NDE-35	SS	02.50 00.375	-----	B SIDE HPI PIPE TO VALVE ID VALVE

ITEM NUMBER	ID. NUMBER	DRAWING NUMBERS	LOCS.	INSP REQ.	PROC. NUMBERS	MATERIAL TYPE/GRADE	DIAM./ THICK	CALIB BLOCK	COMMENTS
B09.021.025	1-50-01-31	SYS 50 ISO 1 P1		PT	NDE-35	SS	01.50 00.281	-----	A1 SUCTION DRAIN LINE PIPE TO REDUCER
B09.021.026	1-50-1.1-25	SYS 50 ISO 01 P1		PT	NDE-35	SS	01.50 00.281	-----	A2 SUCTION DRAIN LINE PIPE TO ELBOW
B09.021.027	1-50-1.1-29	SYS 50 ISO 01 P1		PT	NDE-35	SS	01.50 00.281	-----	A2 SUCTION DRAIN LINE PIPE TO TEE
B09.021.028	1-50-1.1-30	SYS 50 ISO 01 P1		PT	NDE-35	SS	01.50 00.281	-----	A2 SUCTION DRAIN LINE TEE TO PIPE
B09.021.030	1-50-1.2-3	SYS 50 ISO 1 P2		PT	NDE-35	SS	01.50 00.281	-----	B2 DRAIN LINE ELBOW TO PIPE
B09.021.031	1-50-1.2-5	SYS 50 ISO 1 P2		PT	NDE-35	SS	01.50 00.281	-----	B2 DRAIN LINE TEE TO PIPE
B09.021.037	1-51A-04-44C	SYS 51A ISO 4 PO-101B-1		PT	NDE-35	SS	02.50 00.375	-----	1A2 HIGH PRESSURE INJECTION
B09.021.038	1-51A-04-41C	SYS 51A ISO 4 PO-101B-1		PT	NDE-35	SS	02.50 00.375	-----	1A2 HIGH PRESSURE INJECTION

DUKE POWER COMPANY
QUALITY ASSURANCE DEPARTMENT
PRE-SERVICE AND IN-SERVICE INSPECTION SYSTEM
OCONEE 1 INSERVICE INSPECTION LISTING OUTAGE 13

ITEM NUMBER	ID. NUMBER	DRAWING NUMBERS	LOCS.	INSP REQ.	PROC. NUMBERS	MATERIAL TYPE/GRADE	DIAM./ THICK	CALIB BLOCK	COMMENTS
B09.021.039	1-51A-04-39C	SYS 51A ISO 4 PO-101B-1		PT	NDE-35	SS	02.50 00.375	-----	1A2 HIGH PRESSURE INJECTION
B09.021.040	1-51A-04-35C	SYS 51A ISO 4 PO-101B-1		PT	NDE-35	SS	02.50 00.375	-----	1A2 HIGH PRESSURE INJECTION
B09.021.041	1-51A-04-32C	SYS 51A ISO 4 PO-101B-1		PT	NDE-35	SS	02.50 00.375	-----	1A2 HIGH PRESSURE INJECTION
B09.021.042	1-51A-04-30C	SYS 51A ISO 4 PO-101B-1		PT	NDE-35	SS	02.50 00.375	-----	1A2 HIGH PRESSURE INJECTION
B09.021.060	1-51A-11.3-85A	SYS 51A ISO 11 P3		PT	NDE-35	SS	02.50 00.375	-----	HIGH PRESSURE INJECTION
B09.021.061	1-51A-11.3-85B	SYS 51A ISO 11 P3		PT	NDE-35	SS	02.50 00.375	-----	HIGH PRESSURE INJECTION
B09.031.000	******* BRANCH PIPE	CONNECTION WELDS *** **********		***	*******	*****	__.__ __.___	*****	NOMINAL PIPE SIZE ********** 4 INCHES & OVER **********
B09.032.000	******* BRANCH PIPE	CONNECTION WELDS *** **********		***	*******	*****	__.__ __.___	*****	NOMINAL PIPE SIZE ********** LESS THAN 4 INCHES **********

ITEM NUMBER	ID. NUMBER	DRAWING NUMBERS	LOCS.	INSP REQ.	PROC. NUMBERS	MATERIAL TYPE/GRADE	DIAM./ THICK	CALIB BLOCK	COMMENTS
B09.032.017	1PIB2-10	ISI-OCN1-010 B&W 13191I86		MT	NDE-25	CS	03.00 02.250	-----	B2 SUCTION DRAIN NOZZLE PC 64 TO 63
B09.032.022	1PDB2-10	ISI-OCN1-014 OM-201-597		MT	NDE-25	CS	03.00 02.250		
B09.040.000	******* SOCKET WELDS	**********		***	*******	*****	__.__	*****	**********

ITEM NUMBER	ID. NUMBER	DRAWING NUMBERS	LOCS.	INSP REQ.	PROC. NUMBERS	MATERIAL TYPE/GRADE	DIAM./ THICK	CALIB BLOCK	COMMENTS
B10.010.000	CLASS 1 PIPING	INTEGRALLY WELDED ATTACHMENTS*********		***	*******	*****	__.__	*****	**********
B10.010.003	1-53A-H1A	0-479A		PT	NDE35	SS	01.500		C.F.T.1A-SPRING 53A-0-479A-H1A D.E. STRESS CALC. OSC-1299-06

DUKE POWER COMPANY
QUALITY ASSURANCE DEPARTMENT
PRE-SERVICE AND IN-SERVICE INSPECTION SYSTEM
OCONEE 1 INSERVICE INSPECTION LISTING OUTAGE 13

ITEM NUMBER	ID. NUMBER	DRAWING NUMBERS	LOCS.	INSP REQ.	PROC. NUMBERS	MATERIAL TYPE/GRADE	DIAM./ THICK	CALIB BLOCK	COMMENTS
B12.010.000	CLASS 1 PUMPS	CASING WELDS**********		***	*******	*****	__.__	*****	**********
		**********					__.__		**********
B12.020.000	CLASS 1 PUMP	CASINGS**********		***	*******	*****	__.__	*****	**********
		**********					__.__		**********
B12.040.000	CLASS 1 VALVE	BODIES EXCEEDING****		***	*******	*****	__.__	*****	INSPECT IF DISASSEMBLED
		4 INCH NPS**********					__.__		**********

DUKE POWER COMPANY
QUALITY ASSURANCE DEPARTMENT
PRE-SERVICE AND IN-SERVICE INSPECTION SYSTEM
OCONEE 1 INSERVICE INSPECTION LISTING OUTAGE 13

ITEM NUMBER	ID. NUMBER	DRAWING NUMBERS	LOCS.	INSP REQ.	PROC. NUMBERS	MATERIAL TYPE/GRADE	DIAM./ THICK	CALIB BLOCK	COMMENTS
B13.010.000	REACTOR VESSEL	VESSEL INTERIOR***** **********	_____ _____ _____	***	******* _____	***** _____	__.__ __.__	*****	********** ********** _____ _____
B13.010.001	1RPV-INT SUR	OM 201-1008 ----------	_____ _____ _____	VIS	QAL-14 _____	SS _____	__.__ __.__	_____	INTERIOR SURFACES OF VESSEL _____ _____ _____
B13.030.000	REACTOR VESSEL	CORE SUPPORT******** STRUCTURE**********	_____ _____ _____	***	******* _____	***** _____	__.__ __.__	*****	********** ********** _____ _____
B13.030.001	1RPV-INTERNALS	OM 2201-0939 ----------	_____ _____ _____	VT3	QAL-14 _____	_____ _____	__.__ __.__	_____	CORE SUPPORT STRUCTURES WELDS, BOLTING, AND SURFACES _____ _____

ITEM NUMBER	ID. NUMBER	DRAWING NUMBERS	LOCS.	INSP REQ.	PROC. NUMBERS	MATERIAL TYPE/GRADE	DIAM./ THICK	CALIB BLOCK	COMMENTS
B14.010.000	REACTOR VESSEL	CRD HOUSING WELDS*** **********		***	*******	*****	__.__ __.__	*****	INSPECT IF DISASSEMBLED **********
B14.010.003	1RPV-CRD-59WH9	B&W 128720E14 OM-201-2186		PT	NDE-35	SS/IN	04.06 00.650	-----	CRDM HOUSING BODY TO ADAPTER MK-67 TO MK-55
B14.010.006	1RPV-CRD-59W60	B&W 128720E14 DPS 706599-1056		PT	NDE-35	CS/SS	05.00 00.500		CRDM BASE TO MOTOR TUBE
B14.010.009	1RPV-CRD-59	B&W 128720E14 DPS 706599-1056		PT	NDE-35	CS/SS	04.30 00.400		CRDM MOTOR TUBE TO EXTENSION
B14.010.012	1RPV-CRD-59W61	B&W 128720E14 DPS 706605-1058		PT	NDE-35	SS	04.19 00.380		PERIPHERAL CRDM EXTENSION TO CAP

ITEM NUMBER	ID. NUMBER	DRAWING NUMBERS	LOCS.	INSP REQ.	PROC. NUMBERS	MATERIAL TYPE/GRADE	DIAM./ THICK	CALIB BLOCK	COMMENTS
B15.010.000	REACTOR VESSEL	PRESSURE RETAINING** BOUNDARY**********		***	*******	*****	__.__	*****	********** **********
B15.010.001	1RPV-LK TEST	OFD-100A-1.1		VIS	ISI-350	-----	__.__	-----	RX VESSEL SYS. LEAK TEST ALT. EXAM QCL-15 VT2 MAY BE USED
B15.011.000	REACTOR VESSEL	PRESSURE RETAINING** BOUNDARY**********		***	*******	*****	__.__	*****	********** **********
B15.020.000	***PRESSURIZER	PRESSURE RETAINING** BOUNDARY**********		***	*******	*****	__.__	*****	********** **********
B15.020.001	1PZR-LK TEST	OFD-100A-1.2		VIS	ISI-350	-----	__.__	-----	PRESS. SYSTEM LEAK TEST ALT. EXAM QCL-15 VT2 MAY BE USED
B15.021.000	***PRESSURIZER	PRESSURE RETAINING** BOUNDARY**********		***	*******	*****	__.__	*****	********** **********
B15.030.000	*********STEAM	GENERATORS PRESSURE* RETAINING BOUNDARY**		***	*******	*****	__.__	*****	********** **********
B15.030.001	1SGA-LK TEST	OFD-100A-1.1		VIS	ISI-350	-----	__.__	-----	STEAM GEN.A SYS LEAK TEST ALT. EXAM QCL-15 VT2 MAY BE USED

DUKE POWER COMPANY
QUALITY ASSURANCE DEPARTMENT
PRE-SERVICE AND IN-SERVICE INSPECTION SYSTEM
OCONEE 1 INSERVICE INSPECTION LISTING OUTAGE 13

ITEM NUMBER	ID. NUMBER	DRAWING NUMBERS	LOCS.	INSP REQ.	PROC. NUMBERS	MATERIAL TYPE/GRADE	DIAM./ THICK	CALIB BLOCK	COMMENTS
B15.030.002	1SGB-LK TEST	OFD-100A-1.1		VIS	ISI-350	-----	__.__	-----	STEAM GEN.B SYS LEAK TEST ALT. EXAM QCL-15 VT2 MAY BE USED
B15.031.000	*********STEAM	GENERATORS PRESSURE* RETAINING BOUNDARY**		***	*******	*****	__.__	*****	********** **********
B15.040.000	HEAT EXCHANGER	PRESSURE RETAINING BOUNDARY		__		____	__.__	____	********** **********
B15.040.001	1LDC1A-LK TEST	OFD-101A-1.1		VIS	ISI-350	-----	__.__	-----	COOLER 1A SYS LEAK TEST ALT. EXAM QCL-15 VT2 MAY BE USED
B15.040.002	1LDC1B-LK TEST	OFD-101A-1.1		VIS	ISI-350	-----	__.__	-----	COOLER 1B SYS LEAK TEST ALT. EXAM QCL-15 VT2 MAY BE USED
B15.041.000	HEAT EXCHANGER	PRESSURE RETAINING BOUNDARY		__		____	__.__	____	********** **********
B15.050.001	1-OFD-100A-1.1	OFD-100A-1.1		VIS	ISI-350 QCL-15	-----	__.__	-----	CLASS A SYS LEAK TEST-INCLUDES DWG.NOS.O-422BB1A,1B,2,3,5,&6
B15.050.001A	1-OFD-100A-1.2	OFD-100A-1.2		VIS	ISI-350 QCL-15	____	__.__	____	CLASS A SYS LEAK TEST-INCLUDES DWG. NO. O-422BB-4

ITEM NUMBER	ID. NUMBER	DRAWING NUMBERS	LOCS.	INSP REQ.	PROC. NUMBERS	MATERIAL TYPE/GRADE	DIAM./ THICK	CALIB BLOCK	COMMENTS
B15.050.002	1-OFD-101A-1.1	OFD-101A-1.1		VIS	ISI-350	-----	__.__	-----	CLASS A SYSTEM LEAK TEST ALT. EXAM QCL-15 VT2 MAY BE USED
B15.050.003	1-OFD-101A-1.4	OFD-101A-1.4		VT2	ISI-350 QCL-15	-----	__.__	-----	CLASS A SYS LEAK TEST-INCLUDES DWG NO. O-422X-51
B15.050.004	1-OFD-102A-1.1	OFD-102A-1.1		VIS	ISI-350	-----	__.__	-----	CLASS A SYSTEM LEAK TEST ALT. EXAM QCL-15 VT2 MAY BE USED
B15.050.005	1-OFD-102A-1.2	OFD-102A-1.2		VIS	ISI-350	-----	__.__	-----	CLASS A SYSTEM LEAK TEST ALT. EXAM QCL-15 VT2 MAY BE USED
B15.050.006	1-OFD-102A-1.3	OFD-102A-1.3		VIS	ISI-350	-----	__.__	-----	CLASS A SYSTEM LEAK TEST ALT. EXAM QCL-15 VT2 MAY BE USED
B15.050.007	1-OFD-110A-1.1	OFD-110A-1.1		VIS	ISI-350	-----	__.__	-----	CLASS A SYSTEM LEAK TEST ALT. EXAM QCL-15 VT2 MAY BE USED
B15.050.009	1-OFD-110A-1.4	OFD-110A-1.4		VIS	ISI-350	____	__.__	____	CL. A SYSTEM LEAKAGE TEST ALT EXAM QCL-15 VT2 MAY BE USED
B15.051.000	CLASS 1 PIPING	PRESSURE RETAINING** BOUNDARY**********		***	*******	*****	__.__	*****	********** **********

ITEM NUMBER	ID. NUMBER	DRAWING NUMBERS	LOCS.	INSP REQ.	PROC. NUMBERS	MATERIAL TYPE/GRADE	DIAM./ THICK	CALIB BLOCK	COMMENTS
B15.060.000	*CLASS 1 PUMPS	PRESSURE RETAINING** BOUNDARY**********		***	*******	*****	__.__	*****	********** **********
B15.060.001	1-RCP-1A1	OFD-100A-1.1		VIS	ISI-350	-----	__.__	-----	RCP 1A1 SYS LEAK TEST ALT. EXAM QCL-15 VT2 MAY BE USED
B15.060.002	1-RCP-1A2	OFD-100A-1.1		VIS	ISI-350	-----	__.__	-----	RCP 1A2 SYS LEAK TEST ALT. EXAM QCL-15 VT2 MAY BE USED
B15.060.003	1-RCP-1B1	OFD-100A-1.1		VIS	ISI-350	-----	__.__	-----	RCP 1B1 SYS LEAK TEST ALT. EXAM QCL-15 VT2 MAY BE USED
B15.060.004	1-RCP-1B2	OFD-100A-1.1		VIS	ISI-350	-----	__.__	-----	RCP 1B2 SYS LEAK TEST ALT. EXAM QCL-15 VT2 MAY BE USED
B15.061.000	*CLASS 1 PUMPS	PRESSURE RETAINING** BOUNDARY**********		***	*******	*****	__.__	*****	********** **********
B15.071.000	CLASS 1 VALVES	PRESSURE RETAINING** BOUNDARY**********		***	*******	*****	__.__	*****	COVERED IN B15.051.000 **********

DUKE POWER COMPANY
QUALITY ASSURANCE DEPARTMENT
PRE-SERVICE AND IN-SERVICE INSPECTION SYSTEM
OCONEE 1 INSERVICE INSPECTION LISTING OUTAGE 13

ITEM NUMBER	ID. NUMBER	DRAWING NUMBERS	LOCS.	INSP REQ.	PROC. NUMBERS	MATERIAL TYPE/GRADE	DIAM./ THICK	CALIB BLOCK	COMMENTS
B16.011.000	**** STEAM GEMERATOR	TUBING **********		***	******* *******				***** STRIGHT TUBE DESIGN **** **********
B16.011.001	1SGA-TUBES	B&W 129309E7		ET	ISI-418	INCO	00.62 00.040	*****	* SELECT CAL. STANDARD PER VOL.1, SECT. 10.2
B16.011.002	1SGB-TUBES	B&W 129309E7		ET	ISI-418	INCO	00.62 00.040	*****	* SELECT CAL. STANDARD PER VOL.1, SECT. 10.2

DUKE POWER COMPANY
QUALITY ASSURANCE DEPARTMENT
PRE-SERVICE AND IN-SERVICE INSPECTION SYSTEM
OCONEE 1 INSERVICE INSPECTION LISTING OUTAGE 13

ITEM NUMBER	ID. NUMBER	DRAWING NUMBERS	LOCS.	INSP REQ.	PROC. NUMBERS	MATERIAL TYPE/GRADE	DIAM./ THICK	CALIB BLOCK	COMMENTS
C01.010.000	*********SHELL	CIRCUMFERENTIAL***** WELDS**********		***	*******	*****	__.__	*****	***** PRESSURE VESSELS ******* **********
C01.020.000	**********HEAD	CIRCUMFERENTIAL***** WELDS**********		***	*******	*****	__.__	*****	******* PRESSURE VESSELS ***** **********
C01.030.000	*******CLASS 2	TUBESHEET TO SHELL WELDS**********		***	*******	*****	__.__	*****	***** PRESSURE VESSELS ******* **********
C01.030.004	1SGB-WG59	OM-201-1873 ISI-OCN1-004		UT	NDE-620 NDE-640	CS	06.625	40338	GEN B SHELL TO BOT TUBE SHEET PC 6 TO 50 ACCEPTABLE PER IWB-3511-1

DUKE POWER COMPANY
QUALITY ASSURANCE DEPARTMENT
PRE-SERVICE AND IN-SERVICE INSPECTION SYSTEM
OCONEE 1 INSERVICE INSPECTION LISTING OUTAGE 13

ITEM NUMBER	ID. NUMBER	DRAWING NUMBERS	LOCS.	INSP REQ.	PROC. NUMBERS	MATERIAL TYPE/GRADE	DIAM./ THICK	CALIB BLOCK	COMMENTS
C02.010.000	********** NOZZLES	IN VESSELS ********* **********		***	*******	*****	__.__ __.___	*****	1/2" NOMINAL THICKNESS AND**** LESS**********
C02.021.000	********NOZZLE	TO SHELL OR HEAD**** WELDS**********		***	*******	*****	__.__ __.___	*****	********** **********
C02.021.001	1SGA-WG23-1	OM-201-1873 ISI-OCN1-003		UT	NDE-620 NDE-640	CS	29.00 06.625	40338	GEN A STM OUTLET NOZZLE W-X AXIS PC 14 TO 3
C02.021.001A	1SGA-WG23-1	OM-201-1873 ISI-OCN1-003		MT	NDE-25	CS	29.00 06.625	-----	GEN A STM OUTLET NOZZLE W-X AXIS PC 14 TO 3 PIR 1-091-0089 & 4-091-0093
C02.021.002A	1SGA-WG23-2	OM-201-1873 ISI-OCN1-003		MT	NDE-25	CS	29.00 06.625	-----	INSP RFO #13 PER IWC 2430(A) AXIS PC 14 TO 3 ADDED PER IWC-2430(A)
C02.021.006	1-CFTB-OUTLET	OM-201-1021 ----------		UT	NDE-620 NDE-640	CS	20.50 02.875	40410	CORE FLD TK 1CF-T1B OUTLET NOZZLE PC 6 TO 11
C02.021.006A	1-CFTB-OUTLET	OM-201-1021 ----------		MT	NDE-25	CS	20.50 02.875	-----	CORE FLD TK 1CF-T1B OUTLET NOZZLE PC 6 TO 11
C02.022.000	********NOZZLE	INSIDE RADIUS******* SECTION**********		***	*******	*****	__.__ __.___	*****	********** **********

ITEM NUMBER	ID. NUMBER	DRAWING NUMBERS	LOCS.	INSP REQ.	PROC. NUMBERS	MATERIAL TYPE/GRADE	DIAM./ THICK	CALIB BLOCK	COMMENTS
C02.022.001	1SGA-WG23-1	OM-201-1873 ISI-OCN1-003		UT	NDE-680	CS	29.00 06.625	40338	GEN A STM OUTLET NOZZLE W-X AXIS PC 14 TO 3 INSIDE RADIUS
C02.022.006	1-CFTB-OUTLET	OM-201-1021 OM-201-638		UT	NDE-680	CS	20.50 02.875	40410	CORE FLOOD TANK 1CF-T1B OUTLET NOZZLE PC 6 TO 11

DUKE POWER COMPANY
QUALITY ASSURANCE DEPARTMENT
PRE-SERVICE AND IN-SERVICE INSPECTION SYSTEM
OCONEE 1 INSERVICE INSPECTION LISTING OUTAGE 13

ITEM NUMBER	ID. NUMBER	DRAWING NUMBERS	LOCS.	INSP REQ.	PROC. NUMBERS	MATERIAL TYPE/GRADE	DIAM./ THICK	CALIB BLOCK	COMMENTS
C03.010.000	********** PRESSURE	VESSELS INTEGRALLY** WELDED ATTACHMENTS**		***	*******	*****	__.__ __.__	*****	********** **********
C03.010.007	1SGA-WG84-WX	OM-201-176		MT	NDE-25	CS	01.000	-----	SGA FEEDWATER HDR SUPPORT ATT. W-X QUADRANT NEAREST TO W AXIS
C03.010.008	1SGA-WG84-XW	OM-201-176		MT	NDE-25	CS	01.000	-----	SGA FEEDWATER HDR SUPPORT ATT. W-X QUADRANT NEAREST TO X AXIS
C03.010.017	1-CFTA-WT18-X	OM-201-1021		MT	NDE-25	CS	02.000	-----	CORE FLD TK SUPPORT ATTACH. X QUADRANT PC 18 TO 12
C03.010.019	1-CFTA-WT18-Y	OM-201-1021		MT	NDE-25	CS	02.000	-----	CORE FLD TK SUPPORT ATTACH Y QUADRANT PC 18 TO 12
C03.040.000	*** CLASS 2 PIPING	INTEGRALLY WELDED ** ATTACHMENTS ********		***	*******		__.__ __.__		********** **********
C03.040.001	1-01A-H14	0-550		MT	NDE-25	CS	00.750	-----	MAIN STM. B - RIGID 1-01A-0-550-H14
C03.040.002	1-01A-H13	0-550		MT	NDE-25	CS	00.750	-----	MAIN STM. B - RIGID 1-01A-0-550-H13

DUKE POWER COMPANY
QUALITY ASSURANCE DEPARTMENT
PRE-SERVICE AND IN-SERVICE INSPECTION SYSTEM
OCONEE 1 INSERVICE INSPECTION LISTING OUTAGE 13

ITEM NUMBER	ID. NUMBER	DRAWING NUMBERS	LOCS.	INSP REQ.	PROC. NUMBERS	MATERIAL TYPE/GRADE	DIAM./ THICK	CALIB BLOCK	COMMENTS
C03.040.006	1-01A-H22	O-401A		MT	NDE-25	CS	01.000	-----	MAIN STM. B - SPRING 1-01A-3-O-401A-H22
C03.040.023	1-JWC-1702	OM 201-0176		MT	NDE-25	CS	01.000	-----	WX AXIS NEAREST W AXIS
C03.040.024	1-JWC-1701	OM 201-0176		MT	NDE-25	CS	01.000	-----	WX AXIS NEAEST X AXIS
C03.040.054	1-53B-R22	O-436D		PT	NDE-35	SS	00.750	-----	LPI - RIGID 1-53B-5-O-436D-R22
C03.040.057	1-53B-DE061	O-435B		PT	NDE-35	SS	01.000	-----	LPI - RIGID 1-53B-O-435B-DE061
C03.040.058	1-53B-R16	O-436D		PT	NDE-35	SS	01.000	-----	LPI - RIGID 1-53B-5-O-436D-R16
C03.040.064	1-54A-R15	O-444		PT	NDE35	SS	01.000		RB.SPRAY-RIGID 1-54A-O-444-R15 D.E. STRESS CALC. OSC-416
C03.040.066	1-54A-R3	O-435B		PT	NDE-35		01.00		RB SPRAY - RIGID 1-54A-3-O-435B-R3

ITEM NUMBER	ID. NUMBER	DRAWING NUMBERS	LOCS.	INSP REQ.	PROC. NUMBERS	MATERIAL TYPE/GRADE	DIAM./ THICK	CALIB BLOCK	COMMENTS
C03.040.071	1-55-SR12	0-439C		MT	NDE-25	CS	.01.000	-----	COMPONENT COOLING -RIGID 1-55-1-0-439C-SR12

ITEM NUMBER	ID. NUMBER	DRAWING NUMBERS	LOCS.	INSP REQ.	PROC. NUMBERS	MATERIAL TYPE/GRADE	DIAM./ THICK	CALIB BLOCK	COMMENTS
C05.011.000	*** CLASS 2 PIPING	CIRCUMFERENTIAL WELD **********		***	*******	*****	__.__ __.___	*****	NOMINAL WALL THICKNESS ******* 1/2 IN. OR LESS **********
C05.011.050	1-53B-6.2-28K	SYS 53B ISO 6.2		PT	NDE-35	SS	10.00 00.165	-----	
C05.011.051	1-53B-6.1-26K	SYS 53B ISO 6.1		PT	NDE-35	SS	10.00 00.165	-----	
C05.011.052	1-53B-6.1-23KC	SYS 53B ISO 6.1		PT	NDE-35	SS	10.00 00.165	-----	
C05.011.053	1-53B-6.1-21KD	SYS 53B ISO 6.1		PT	NDE-35	SS	08.00 00.148	-----	
C05.011.054	1-53B-6.1-21KM	SYS 53B ISO 6.1		PT	NDE-35	SS	08.00 00.148	-----	
C05.011.057	1-53B-3.2-16E	SYS 53B ISO 3.2		PT	NDE-35	SS	10.00 00.165	-----	
C05.011.058	1-53B-3.2-9E	SYS 53B ISO 3.2		PT	NDE-35	SS	10.00 00.165	-----	

DUKE POWER COMPANY
QUALITY ASSURANCE DEPARTMENT
PRE-SERVICE AND IN-SERVICE INSPECTION SYSTEM
OCONEE 1 INSERVICE INSPECTION LISTING OUTAGE 13

ITEM NUMBER	ID. NUMBER	DRAWING NUMBERS	LOCS.	INSP REQ.	PROC. NUMBERS	MATERIAL TYPE/GRADE	DIAM./ THICK	CALIB BLOCK	COMMENTS
C05.011.081A	1-53B-1.1-B29	SYS 53B ISO 1.1		PT	NDE-35	SS	14.00 00.250	-----	SELECTION CRITERIA 5.2
C05.011.089	1-53B-10-86BR	SYS 53B ISO 10		PT	NDE-35	SS	12.00 00.180	-----	
C05.011.092	1-53B-10-B78	SYS 53B ISO 10		PT	NDE-35	SS	12.00 00.180	-----	
C05.011.094	1-53B-10-B59	SYS 53B ISO 10		PT	NDE-35	SS	12.00 00.180	-----	
C05.011.096	1-53B-1.4-B56	SYS 53B ISO 1.4		PT	NDE-35	SS	12.00 00.180	-----	
C05.011.103	1-53B-6.1-21KI	SYS 53B ISO 6.1		PT	NDE-35	SS	08.00 00.148	-----	
C05.011.104	1-53B-1.5-98B	SYS 53B ISO 1.5		PT	NDE-35	SS	08.00 00.148	-----	
C05.011.106	1-53B-1.5-89B	SYS 53B ISO 1.5		PT	NDE-35	SS	08.00 00.148	-----	

DUKE POWER COMPANY
QUALITY ASSURANCE DEPARTMENT
PRE-SERVICE AND IN-SERVICE INSPECTION SYSTEM
OCONEE 1 INSERVICE INSPECTION LISTING OUTAGE 13

ITEM NUMBER	ID. NUMBER	DRAWING NUMBERS	LOCS.	INSP REQ.	PROC. NUMBERS	MATERIAL TYPE/GRADE	DIAM./ THICK	CALIB BLOCK	COMMENTS
C05.011.108	1-53B-1.5-105B	SYS 53B ISO 1.5		PT	NDE-35	SS	06.00 00.134	-----	
C05.011.204	1-54A-1.3-13C	SYS 54A ISO 1.3		PT	NDE-35	SS	10.00 00.250	-----	
C05.011.210	1-54A-3.1-16C	SYS 54A ISO 3.1		PT	NDE-35	SS	08.00 00.250	-----	
C05.011.214	1-54A-4.1-30C	SYS 54A ISO 4.1		PT	NDE-35	SS	08.00 00.250	-----	
C05.011.218	1-54A-4.2-47C	SYS 54A ISO 4.2		PT	NDE-35	SS	08.00 00.250	-----	
C05.011.226	1-54A-3.2-7B	SYS 54A ISO 3.2		PT	NDE-35	SS	08.00 00.250	-----	
C05.011.227	1-54A-3.2-12B	SYS 54A ISO 3.2		PT	NDE-35	SS	08.00 00.250	-----	
C05.011.232	1-54A-4.4-27B	SYS 54A ISO 4.4		PT	NDE-35	SS	08.00 00.250	-----	

DUKE POWER COMPANY
QUALITY ASSURANCE DEPARTMENT
PRE-SERVICE AND IN-SERVICE INSPECTION SYSTEM
OCONEE 1 INSERVICE INSPECTION LISTING OUTAGE 13

ITEM NUMBER	ID. NUMBER	DRAWING NUMBERS	LOCS.	INSP REQ.	PROC. NUMBERS	MATERIAL TYPE/GRADE	DIAM./ THICK	CALIB BLOCK	COMMENTS
C05.011.233	1-54A-4.2-65C	SYS 54A ISO 4.2		PT	NDE-35	SS	08.00 00.250	-----	
C05.011.300	1-03A-4.1-45	SYS 03A ISO 4.1		MT	NDE-25	CS	06.00 00.432	-----	
C05.011.301	1-03A-4.1-79	SYS 03A ISO 4.1		MT	NDE-25	CS	06.00 00.432	-----	
C05.012.000	***** CLASS 2 PIPING	LONGITUDINAL WELDS * **********		***	*******	*****	__.__ __.__	*****	NOMINAL WALL THICKNESS ******* 1/2 IN. OR LESS **********
C05.012.027	1-53B-10-86BRL	SYS 53B ISO 10		PT	NDE-35	SS	12.00 00.180		LONG SEAM FOR 86BR
C05.012.028	1-53B-1.5-98BL	SYS 53B ISO 1.5		PT	NDE-35	SS	08.00 00.148		LONG SEAM FOR 98B
C05.012.029	1-53B-1.5-89BL	SYS 53B ISO 1.5		PT	NDE-35	SS	08.00 00.148		LONG SEAM FOR 89B
C05.012.030	1-53B-6.1-23KCL	SYS 53B ISO 6.1		PT	NDE-35	SS	10.00 00.165		

DUKE POWER COMPANY
QUALITY ASSURANCE DEPARTMENT
PRE-SERVICE AND IN-SERVICE INSPECTION SYSTEM
OCONEE 1 INSERVICE INSPECTION LISTING OUTAGE 13

ITEM NUMBER	ID. NUMBER	DRAWING NUMBERS	LOCS.	INSP REQ.	PROC. NUMBERS	MATERIAL TYPE/GRADE	DIAM./ THICK	CALIB BLOCK	COMMENTS
C05.012.031	1-54A-4.2-65CLI	SYS 54A ISO 4.2		PT	NDE-35	SS	08.00 00.250		LONG SEAM FOR C05.011.233 INSIDE RADIUS OF ELL
C05.012.031A	1-54A-4.2-65CLO	SYS 54A ISO 4.2		PT	NDE-35	SS	08.00 00.250		LONG SEAM FOR C05.011.233 OUTSIDE RADIUS OF ELL
C05.021.000	***** CLASS 2 PIPING	CIRCUMFERENTIAL***** WELDS**********		***	*******	*****	__.__ __.__	*****	GREATER THAN 1/2 IN. ********* NOMINAL WALL THICKNESS *******
C05.021.027	1-01A-MS8A-A	SYS 01A ISO 02 GRINN SUBASSEM MS8A		RT	NDE-12	CS	34.00 01.164	-----	
C05.021.027A	1-01A-MS8A-A	SYS 01A ISO 02 GRINN SUBASSEM MS8A		MT	NDE-25	CS	34.00 01.164	-----	
C05.021.030	1-1MS47-7	SYS 01A ISO 1MS-47 ----------		RT	NDE-12	CS	12.00 00.562	-----	
C05.021.030A	1-MS47-7	ISO 1MS-47 ----------		MT	NDE-25	CS	12.00 00.562	-----	
C05.021.032	1-01A-MS13A-B	SYS 01A-ISO 1.3 GRINN SUBASSEM MS13A		RT	NDE-12	CS	34.00 01.164	-----	

ITEM NUMBER	ID. NUMBER	DRAWING NUMBERS	LOCS.	INSP REQ.	PROC. NUMBERS	MATERIAL TYPE/GRADE	DIAM./ THICK	CALIB BLOCK	COMMENTS
C05.021.032A	1-01A-MS13A-B	SYS 01A-ISO 1.3 GRINN SUBASSEM MS13A		MT	NDE-25	CS	34.00 01.164	-----	
C05.021.038	1-01A-1.4-85	SYS 01A ISO 1.4		RT	NDE-12	CS	12.00 00.562	-----	
C05.021.038A	1-01A-1.4-85	SYS 01A ISO 1.4		MT	NDE-25	CS	12.00 00.562	-----	
C05.021.048	1-01A-1.1-30E	SYS 01A ISO 1.1		RT	NDE-12	CS	12.00 00.562	-----	
C05.021.048A	1-01A-1.1-30E	SYS 01A ISO 1.1		MT	NDE-25	CS	12.00 00.562	-----	
C05.021.100	1-03-FWD64-B	SYS 03 FWD 64-B GRINN SUBASSEM FWD64		RT	NDE-12	CS	24.00 01.219	-----	
C05.021.100A	1-03-FWD64-B	SYS 03 FWD 64-B GRINN SUBASSEM FWD64		MT	NDE-25	CS	24.00 01.219	-----	
C05.021.103	1-03-3-28B	SYS 03 ISO 3		RT	NDE-12	CS	20.00 01.031	-----	

ITEM NUMBER	ID. NUMBER	DRAWING NUMBERS	LOCS.	INSP REQ.	PROC. NUMBERS	MATERIAL TYPE/GRADE	DIAM./ THICK	CALIB BLOCK	COMMENTS
C05.021.103A	1-03-3-28B	SYS 03 ISO 3		MT	NDE-25	CS	20.00 01.031	-----	PIR 1-091-0079
C05.021.105A	1-03-9-WG91A	SYS 03 ISO 9 OM 201-1875		MT	NDE-25	CS	14.00 00.750	-----	VENDOR WELD RING HEADER INSP RF013 IWC 2430(A) ADDED PER IWC-2430(A)
C05.021.106	1-03-9-WG91D	SYS 03 ISO 9 OM 201-1875		RT	NDE-12	CS	14.00 00.750	-----	VENDOR WELD RING HEADER
C05.021.106A	1-03-9-WG91D	SYS 03 ISO 9 OM 201-1875		MT	NDE-25	CS	14.00 00.750	-----	VENDOR WELD RING HEADER
C05.021.107A	1-03-9-WG91E	SYS 03 ISO 9 OM 201-1875		MT	NDE-25	CS	14.00 00.750	-----	VENDOR WELD RING HEADER INSP RF013 IWC 2430(A) ADDED PER IWC-2430(A)
C05.021.108A	1-03-9-WG91G	SYS 03 ISO 9 OM 201-1875		MT	NDE-25	CS	14.00 00.750	-----	VENDOR WELD RING HEADER INSP RF013 IWC 2430(A) ADDED PER IWC-2430(A)
C05.021.109A	1-03-3-26C	SYS 03 ISO 3		MT	NDE-25	CS	24.00 01.219	-----	INSP RF013 IWC 2430(A) ADDED PER IWC-2430(A)
C05.021.114	1-03-FWD87-A	SYS 03 FWD 87-A GRINN SUBASSEM FWD87		RT	NDE-12	CS	14.00 00.750	-----	INSP.RF0#10 PER IWC-2430(A)

ITEM NUMBER	ID. NUMBER	DRAWING NUMBERS	LOCS.	INSP REQ.	PROC. NUMBERS	MATERIAL TYPE/GRADE	DIAM./ THICK	CALIB BLOCK	COMMENTS
C05.021.114A	1-03-FWD87-A	SYS 03 FWD 87-A GRINN SUBASSEM FWD87		MT	NDE-25	CS	14.00 00.750	-----	---------- ---------- INSP.RFO#10 PER IWC-2430(A)
C05.021.115A	1-03-10-WG91B	SYS 03 ISO 10 OM 201-1875		MT	NDE-25	CS	14.00 00.750	-----	VENDOR WELD RING HEADER ---------- INSP RFO13 IWC 2430(A) ADDED PER IWC-2430(A)
C05.021.116	1-03-03-44B	SYS 03 ISO 03 ----------		RT	NDE-12	CS	14.00 00.750	-----	---------- ---------- INSP.RFO#10 PER IWC-2430(A)
C05.021.116A	1-03-03-44B	SYS 03 ISO 03 ----------		MT	NDE-25	CS	14.00 00.750	-----	---------- ---------- INSP.RFO#10 PER IWC-2430(A)
C05.022.000	***** CLASS 2 PIPING	LONGITUDINAL WELDS * **********		***	******* *******		__.__ __.__		GREATER THAN 1/2 IN. ********* NOMINAL WALL THICKNESS *******
C05.022.010	1-01A-MS8A-A-L	SYS 01A ISO 02 GRINN SUBASSEM MS8A		RT	NDE-12	CS	34.00 01.164		LONG SEAM FOR C05.021.027A
C05.022.010A	1-01A-MS8A-A-L	SYS 01A ISO 02 GRINN SUBASSEM MS8A		MT	NDE-25	CS	34.00 01.164		LONG SEAM FOR C05.021.027A
C05.022.011	1-01A-MS13A-BL	SYS 01A ISO 1.3 GRINN SUBASSEM MS13A		RT	NDE-12	CS	34.00 01.164		LONG SEAM FOR C05.021.032A PIPE

ITEM NUMBER	ID. NUMBER	DRAWING NUMBERS	LOCS.	INSP REQ.	PROC. NUMBERS	MATERIAL TYPE/GRADE	DIAM./ THICK	CALIB BLOCK	COMMENTS
C05.022.011A	1-01A-MS13A-BL	SYS 01A ISO 1.3 GRINN SUBASSEM MS13A		MT	NDE-25	CS	34.00 01.164		LONG SEAM FOR C05.021.032A PIPE
C05.022.012	1-01A-MS13A-BL1	SYS 01A ISO 1.3 GRINN SUBASSEM MS13A		RT	NDE-12	CS	34.00 01.164		LONG SEAM FOR C05.021.032A ELL
C05.022.012A	1-01A-MS13A-BL1	SYS 01A ISO 1.3 GRINN SUBASSEM MS13A		MT	NDE-25	CS	34.00 01.164		LONG SEAM FOR C05.021.032A ELL
C05.031.000	CLASS 2 PIPING	BRANCH CONNECTION WELDS**********		***	******* *******	*****	__.__ __.__	*****	********** **********
C05.031.007	1-53B-6.1-21KA	SYS 53B ISO 06.01 ----------		PT	NDE-35	SS	08.00 00.148	-----	COLLAR WELD (21KB) INSP ALL WELDS SELECTION CRITERIA 5.2
C05.031.009	1-53B-06-26KI	SYS 53BISO 06.02 ----------		PT	NDE-35	SS	06.00 00.134	-----	---------- ----------

DUKE POWER COMPANY
QUALITY ASSURANCE DEPARTMENT
PRE-SERVICE AND IN-SERVICE INSPECTION SYSTEM
OCONEE 1 INSERVICE INSPECTION LISTING OUTAGE 13

ITEM NUMBER	ID. NUMBER	DRAWING NUMBERS	LOCS.	INSP REQ.	PROC. NUMBERS	MATERIAL TYPE/GRADE	DIAM./ THICK	CALIB BLOCK	COMMENTS
C07.010.000	********** PRESSURE	VESSELS********** **********		***	*******	*****	__.__ __.__	*****	PRESSURE RETAINING COMPONENTS* **********
C07.020.000	********PIPING	********** **********		***	*******	*****	__.__ __.__	*****	PRESSURE RETAINING COMPONENTS* **********
C07.021.003	1-OFD-101A-1.1	OFD-101A-1.1 ----------		VT2	QCL-15 ISI-350	-----	__.__ __.__	-----	CL B SYSTEM HYDRO TEST
C07.021.005	1-OFD-101A-1.3	OFD-101A-1.3 ----------		VT2	QCL-15 ISI-350	-----	__.__ __.__	-----	CL B SYSTEM HYDRO TEST INCL. INCLS. SHTS. 2,3,4 & 5 PARTIAL
C07.021.006	1-OFD-101A-1.4	OFD-101A-1.4 ----------		VT2	QCL-15 ISI-350	-----	__.__ __.__	-----	CL B SYSTEM HYDRO TEST INCLS. SHTS. 2,3,4 & 5 PARTIAL
C07.021.007	1-OFD-101A-1.5	OFD-101A-1.5 ----------		VT2	ISI-350	-----	__.__ __.__	-----	CL B SYSTEM HYDRO TEST INCLS. SHTS. 2 & 3 PARTIAL
C07.021.008	1-OFD-102A-1.1	OFD-102A-1.1 ----------		VT2	QCL-15 ISI-350	-----	__.__ __.__	-----	CL. B SYSTEM HYDRO TEST INCLS. SHEETS 2 & 3 PARTIAL
C07.021.011	1-OFD-103A-1.1	OFD-103A-1.1 ----------		VT2	QCL-15 ISI-350	-----	__.__ __.__	-----	CL B SYSTEM HYDRO TEST INCLS. SHTS. 2,3 & 4

DUKE POWER COMPANY
QUALITY ASSURANCE DEPARTMENT
PRE-SERVICE AND IN-SERVICE INSPECTION SYSTEM
OCONEE 1 INSERVICE INSPECTION LISTING OUTAGE 13

ITEM NUMBER	ID. NUMBER	DRAWING NUMBERS	LOCS.	INSP REQ.	PROC. NUMBERS	MATERIAL TYPE/GRADE	DIAM./ THICK	CALIB BLOCK	COMMENTS
C07.021.012	1-OFD-104A-1.1	OFD-104A-1.1		VT2	QCL-15 ISI-350	-----	__.__	-----	CL B SYSTEM HYDRO TEST PARTIAL
C07.021.014	1-OFD-106E-1.1	OFD-106E-1.1		VT2	QCL-15 ISI-350	-----	__.__	-----	CL B SYSTEM HYDRO TEST PARTIAL
C07.021.015	1-OFD-107A-1.1	OFD-107A-1.1		VT2	QCL-15 ISI-350	-----	__.__	-----	CL B SYSTEM HYDRO TEST PARTIAL
C07.021.017	1-OFD-107B-1.1	OFD-107B-1.1		VT2	QCL-15 ISI-350	-----	__.__	-----	CL B SYSTEM HYDRO TEST PARTIAL
C07.021.025	1-OFD-121D-1.1	OFD-121D-1.1		VT2	QCL-15 ISI-350	-----	__.__	-----	CL B SYSTEM HYDRO TEST PARTIAL
C07.021.031	1-OFD-124B-1.2	OFD-124B-1.2		VT2	QCL-15 ISI-350		__.__		CL B SYSTEM HYDRO TEST PARTIAL
C07.021.032	1-OFD-124B-1.4	OFD-124B-1.4		VT2	QCL-15 ISI-350		__.__		CL B SYSTEM HYDRO TEST INCLS. SHT. 2
C07.021.036	1-OFD-144A-1.2	OFD-144A-1.2		VT2	QCL-15 ISI-350	-----	__.__	-----	CL B SYSTEM HYDRO TEST

DUKE POWER COMPANY
QUALITY ASSURANCE DEPARTMENT
PRE-SERVICE AND IN-SERVICE INSPECTION SYSTEM
OCONEE 1 INSERVICE INSPECTION LISTING OUTAGE 13

ITEM NUMBER	ID. NUMBER	DRAWING NUMBERS	LOCS.	INSP REQ.	PROC. NUMBERS	MATERIAL TYPE/GRADE	DIAM./ THICK	CALIB BLOCK	COMMENTS
C07.021.037	1-0FD-144A-1.3	0FD-144A-1.3		VT2	QCL-15 ISI-350	-----	__.__	-----	CL B SYSTEM HYDRO TEST
C07.021.040	1-0FD-124B-1.3	0FD-124B-1.3		VT2	QCL-15 ISI-350		__.__		CL. B SYSTEM HYDRO TEST
C07.030.000	**********PUMPS	**********		***	*******	*****	__.__	*****	PRESSURE RETAINING COMPONENTS* SYSTEM PRESSURE TEST**********
C07.031.007	1RBS PUMP-1A	0FD-103A-1.1		VT2	QCL-15 ISI-350	-----	__.__	-----	RBS PUMP 1A HYDRO TEST
C07.031.008	1RBS PUMP 1B	0FD-103A-1.1		VT2	QCL-15 ISI-350	-----	__.__	-----	RBS PUMP 1B HYDRO TEST
C07.031.009	1SSF-1P-1	0FD-101A-1.5		VT2	QCL-15 ISI-350	-----	__.__	-----	SSF-1P-1 PUMP HYDRO TEST
C07.040.000	********VALVES	**********		***	*******	*****	__.__	*****	PRESSURE RETAINING COMPONENTS COVERED IN C07.020.000 SAME AS C07.020.000 SAME AS C07.020.000

DUKE POWER COMPANY
QUALITY ASSURANCE DEPARTMENT
PRE-SERVICE AND IN-SERVICE INSPECTION SYSTEM
OCONEE 1 INSERVICE INSPECTION LISTING OUTAGE 13

ITEM NUMBER	ID. NUMBER	DRAWING NUMBERS	LOCS.	INSP REQ.	PROC. NUMBERS	MATERIAL TYPE/GRADE	DIAM./ THICK	CALIB BLOCK	COMMENTS
D01.011.000	********SYSTEM	INSERVICE TEST****** **********		***	*******	*****	__.__ __.__	*****	********** **********
D01.011.002	1-OFD-101A-1.1	OFD-101A-1.1		VT2	QAL-15 ISI-350		__.__ __.__	-----	CL. C SYSTEM LEAK TEST
D01.011.017	1-OFD-110A-1.4	OFD-110A-1.4		VT2	QAL-15 ISI-350		__.__ __.__		CL. C SYSTEM LEAK TEST
D01.012.002	1-OFD-101A-1.1	OFD-101A-1.1		VT2	QCL-15 ISI-350		__.__ __.__	-----	CL. C SYSTEM HYDRO TEST INCLS. SHTS. 2,3,4 & 5 PARTIAL
D01.012.003	1-OFD-101A-1.2	OFD-101A-1.2		VT2	QCL-15 ISI-350		__.__ __.__	-----	CL. C SYSTEM HYDRO TEST INCLS. SHTS. 2,3,4 & 5 PARTIAL
D01.012.004	1-OFD-101A-1.3	OFD-101A-1.3		VT2	QCL-15 ISI-350		__.__ __.__	-----	CL. C SYSTEM HYDRO TEST
D01.012.005	1-OFD-101A-1.4	OFD-101A-1.4		VT2	QCL-15 ISI-350		__.__ __.__	-----	CL. C SYSTEM HYDRO TEST INCLS. SHT. 2 PARTIAL
D01.012.006	1-OFD-101A-1.5	OFD-101A-1.5		VT2	QCL-15 ISI-350		__.__ __.__	-----	CL. C SYSTEM HYDRO TEST

DUKE POWER COMPANY
QUALITY ASSURANCE DEPARTMENT
PRE-SERVICE AND IN-SERVICE INSPECTION SYSTEM
OCONEE 1 INSERVICE INSPECTION LISTING OUTAGE 13

ITEM NUMBER	ID. NUMBER	DRAWING NUMBERS	LOCS.	INSP REQ.	PROC. NUMBERS	MATERIAL TYPE/GRADE	DIAM./ THICK	CALIB BLOCK	COMMENTS
D01.012.008	1-OFD-109A-1.1	OFD-109A-1.1		VT2	QCL-15 ISI-350		__.__ __.__	-----	CL. C SYSTEM HYDRO TEST PARTIAL
D01.012.009	1-OFD-110A-1.1	OFD-110A-1.1		VT2	QCL-15 ISI-350		__.__ __.__	-----	CL. C SYSTEM HYDRO TEST PARTIAL
D01.012.012	1-OFD-144A-1.2	OFD-144A-1.2		VT2	QCL-15 ISI-350		__.__ __.__	-----	CL. C SYSTEM HYDRO TEST
D01.012.013	1-OFD-102A-1.2	OFD-102A-1.2		VT2	QCL-15 ISI-350		__.__ __.__		CL. C SYSTEM HYDRO TEST

DUKE POWER COMPANY
QUALITY ASSURANCE DEPARTMENT
PRE-SERVICE AND IN-SERVICE INSPECTION SYSTEM
OCONEE 1 INSERVICE INSPECTION LISTING OUTAGE 13

ITEM NUMBER	ID. NUMBER	DRAWING NUMBERS	LOCS.	INSP REQ.	PROC. NUMBERS	MATERIAL TYPE/GRADE	DIAM./ THICK	CALIB BLOCK	COMMENTS
D02.011.000	********SYSTEM	FUNCTIONAL********** TEST**********		***	*******	*****	__.__ __.__	*****	********** **********
D02.011.010	1-OFD-121D-1.2	OFD-121D-1.2		VT2	QAL-15 ISI-350		__.__ __.__	-----	CL. C SYSTEM LEAK TEST
D02.012.004	1-OFD-121A-1.8	OFD-121A-1.8		VT2	QCL-15 ISI-350		__.__ __.__	-----	CL. C SYSTEM HYDRO TEST PARTIAL
D02.012.005	1-OFD-121B-1.3	OFD-121B-1.3		VT2	QCL-15 ISI-350		__.__ __.__	-----	CL. C SYSTEM HYDRO TEST INCLS. SHTS. 2 & 3 PARTIAL
D02.012.006	1-OFD-121B-1.5	OFD-121B-1.5		VT2	QCL-15 ISI-350		__.__ __.__	-----	CL. C SYSTEM HYDRO TEST PARTIAL
D02.012.009	1-OFD-121D-1.1	OFD-121D-1.1		VT2	QCL-15 ISI-350		__.__ __.__	-----	CL. C SYSTEM HYDRO TEST INCLS. SHTS. 2-8 PARTIAL
D02.012.011	1-OFD-121D-2.1	OFD-121D-2.1		VT2	QCL-15 ISI-350		__.__ __.__	-----	CL. C SYSTEM HYDRO TEST
D02.012.012	1-OFD-121D-3.1	OFD-121D-3.1		VT2	QCL-15 ISI-350		__.__ __.__	-----	CL. C SYSTEM HYDRO TEST

DUKE POWER COMPANY
QUALITY ASSURANCE DEPARTMENT
PRE-SERVICE AND IN-SERVICE INSPECTION SYSTEM
OCONEE 1 INSERVICE INSPECTION LISTING OUTAGE 13

ITEM NUMBER	ID. NUMBER	DRAWING NUMBERS	LOCS.	INSP REQ.	PROC. NUMBERS	MATERIAL TYPE/GRADE	DIAM./ THICK	CALIB BLOCK	COMMENTS
D02.012.013	1-OFD-122A-1.4	OFD-122A-1.4		VT2	QCL-15 ISI-350		__.__ __.__	-----	CL. C SYSTEM HYDRO TEST INCLS. SHTS. 2 & 3 PARTIAL
D02.012.021	1-OFD-133A-2.5	OFD-133A-2.5		VT2	QCL-15 ISI-350		__.__ __.__	-----	CL. C SYSTEM HYDRO TEST INCLS. SHTS. 2 THRU 13 PARTIAL
D02.012.036	1-OFD-124B-1.2	OFD-124B-1.2		VT2	QCL-15 ISI-350	-----	__.__ __.__	-----	CL. C SYSTEM HYDRO TEST INCLS. SHT. 2 PARTIAL
D02.020.000	***** CLASS 3 PIPING	INTEGRAL ATTACHMENT WELDS **********		***	*******	*****	__.__ __.__	*****	COMPONENT SUPPORTS ********** AND RESTRAINTS **********
D02.020.001	1-01A-DE008	401A		VT3	QCL-14		__.__ __.__		STEAM SUPPLY - RIGID 1-01A-401A-DE008
D02.020.004	1-01A-H4	O-401A		VT3	QCL-14		__.__ __.__		STEAM SUPPLY - SPRING 1-01A-4-O-401A-H4
D02.020.012	1-03A-SR30	O-401B		VT3	QCL-14		__.__ __.__		EMER. FDWTR. - RIGID 1-03A-1-O-401B-SR30
D02.020.013	1-03A-SR84	O-400B		VT3	QAL-14		__.__ __.__		EMER FDWTR 1-03-1-O-400B-SR84

DUKE POWER COMPANY
QUALITY ASSURANCE DEPARTMENT
PRE-SERVICE AND IN-SERVICE INSPECTION SYSTEM
OCONEE 1 INSERVICE INSPECTION LISTING OUTAGE 13

ITEM NUMBER	ID. NUMBER	DRAWING NUMBERS	LOCS.	INSP REQ.	PROC. NUMBERS	MATERIAL TYPE/GRADE	DIAM./ THICK	CALIB BLOCK	COMMENTS
D02.020.026	1-03A-SR96	0-439B		VT3	QAL-14	-----	__.__	-----	EMER. FDWTR - RIGID 1-03A-1-0-439B-SR96
D02.020.027	1-03A-H54	0-400B		VT3	QAL-14	-----	__.__	-----	EMER. FDWTR - RIGID 1-03A-1-0-400B-H54
D02.020.028	1-03A-H55	0-400B		VT3	QAL-14	-----	__.__	-----	EMER. FDWTR - RIGID 1-03A-1-0-400B-H55
D02.020.029	1-03A-H59	0-400B		VT3	QAL-14	-----	__.__	-----	EMER. FDWTR - RIGID 1-03A-1-0-400B-H59
D02.020.038	1-03A-H49	0-400A		VT3	QAL-14	-----	__.__	-----	EMER. FDWTR - RIGID 1-03A-1-0-400A-H49
D02.020.040	1-03A-SR61	0-437A		VT3	QAL-14	-----	__.__	-----	EMER. FDWTR - RIGID 1-03A-1-0-437A-SR61
D02.020.046	1-03A-SR96	0-437A		VT3	QAL-14	-----	__.__	-----	EMER. FDWTR. - RESTRAINT 1-03A-1-0-437A-SR96
D02.020.059	1-03A-H146	0-400A		VT3	QAL-14	-----	__.__	-----	EMER. FDWTR. - RIGID 1-03A-1-0-400A-H146

DUKE POWER COMPANY
QUALITY ASSURANCE DEPARTMENT
PRE-SERVICE AND IN-SERVICE INSPECTION SYSTEM
OCONEE 1 INSERVICE INSPECTION LISTING OUTAGE 13

ITEM NUMBER	ID. NUMBER	DRAWING NUMBERS	LOCS.	INSP REQ.	PROC. NUMBERS	MATERIAL TYPE/GRADE	DIAM./ THICK	CALIB BLOCK	COMMENTS
D02.020.060	1-03A-SR19	O-401A		VT3	QAL-14	-----	__.__	-----	EMER. FDWTR - RIGID 1-03A-1-O-401A-SR19
D02.020.085	1-03A-SR48	O-439B		VT3	QAL-14		__.__		EMER. FDWTR-RIGID 1-03A-1-O-439B-SR48
D02.020.086	1-03A-SR49	O-439B		VT3	QAL-14		__.__		EMER. FDWTR-RIGID 1-03A-1-O-439B-SR49
D02.020.092	1-03A-H53	O-400B		VT3	QAL-14		__.__		EMER. FDWTR-RIGID 1-03A-1-O-400B-H53
D02.020.094	1-03A-DE062	O-400B		VT3	QAL-14		__.__		EMER. FDWTR-RIGID 1-03A-1-O-400B-DE062
D02.020.095	1-03A-SR85	O-400B		VT3	QAL-14		__.__		EMER. FDWTR-RIGID 1-03A-1-O-400B-SR85
D02.020.097	1-03A-H38	O-400A		VT3	QAL-14		__.__		EMER. FDWTR-RIGID 1-03A-1-O-400A-H38
D02.030.000	******INTEGRAL	ATTACHMENT********** **********		***	*******	*****	__.__	*****	MECHANICAL&HYDRAULIC SNUBBERS **********

ITEM NUMBER	ID. NUMBER	DRAWING NUMBERS	LOCS.	INSP REQ.	PROC. NUMBERS	MATERIAL TYPE/GRADE	DIAM./ THICK	CALIB BLOCK	COMMENTS
D02.030.015	1-03A-SR53	0-400A		VT3	QAL-14	-----	__.__	-----	EMER FDWTR - SNUBBER 1-03A-1-0-400A-SR53
D02.040.000	******INTEGRAL	ATTACHMENT********** **********		***	*******	*****	__.__	*****	SPRING TYPE SUPPORTS********** **********
D02.040.001	1-03-H58	0-551		VT3	QAL-14	-----	__.__	-----	MAIN FDWTR B - SPRING 1-03-0-551-H58
D02.040.002	1-03-H59	0-551		VT3	QAL-14	-----	__.__	-----	MAIN FDWTR B - SPRING 1-03-0-551-H59
D02.060.000	******INTEGRAL	ATTACHMENT********** **********		***	*******	*****	__.__	*****	SHOCK ABSORBERS********** **********
D02.060.010	1-03-R12	0-551		VT3	QAL-14	-----	__.__	-----	MAIN FDWTR B - HY. S.S. SUPP. 1-03-0-551-R12

ITEM NUMBER	ID. NUMBER	DRAWING NUMBERS	LOCS.	INSP REQ.	PROC. NUMBERS	MATERIAL TYPE/GRADE	DIAM./ THICK	CALIB BLOCK	COMMENTS
D03.011.000	********SYSTEM	INSERVICE TEST****** **********		***	*******	*****	__.__ __.__	*****	********** **********
D03.012.001	1-OFD-104A-1.1	OFD-104A-1.1 ----------		VT2	QCL-15 ISI-350		__.__ __.__	-----	CL. C SYSTEM HYDRO TEST INCLS. SHTS. 2-8 PARTIAL
D03.012.002	1-OFD-104A-1.2	OFD-104A-1.2 ----------		VT2	QCL-15 ISI-350		__.__ __.__	-----	CL. C SYSTEM HYDRO TEST INCLS. SHTS. 2, 3, & 4 PARTIAL

ITEM NUMBER	ID. NUMBER	DRAWING NUMBERS	LOCS.	INSP REQ.	PROC. NUMBERS	MATERIAL TYPE/GRADE	DIAM./ THICK	CALIB BLOCK	COMMENTS
E01.001.000	REACTOR COOL. PUMP	FLYWHEEL INSPECTION **********		***	*******	*****	__.__ __.__	*****	********** **********
E01.001.002	1RCP-1A2	OM-201D-38		UT	ISI-117 NDE-900	CS	72.00 09.500	-----	RC PUMP 1A2 FLYWHEEL
E01.001.003	1RCP-1B1	OM-201D-38		UT	ISI-117 NDE-900	CS	72.00 09.500	-----	RC PUMP 1B1 FLYWHEEL
E01.001.004	1RCP-1B2	OM-201D-38		UT	ISI-117 NDE-900	CS	72.00 09.500	-----	RC PUMP 1B2 FLYWHEEL

DUKE POWER COMPANY
QUALITY ASSURANCE DEPARTMENT
PRE-SERVICE AND IN-SERVICE INSPECTION SYSTEM
OCONEE 1 INSERVICE INSPECTION LISTING OUTAGE 13

ITEM NUMBER	ID. NUMBER	DRAWING NUMBERS	LOCS.	INSP REQ.	PROC. NUMBERS	MATERIAL TYPE/GRADE	DIAM./ THICK	CALIB BLOCK	COMMENTS
E03.001.000	*****ALTERNATE	EXAMINATIONS******** **********		***	*******	*****	__.__ __.___	*****	********** **********
E03.001.001	1-50-47-3	SYS 50 ISO 47		PT	NDE-35	SS	03.50 00.438	-----	REQUEST FOR RELIEF ONS-005
E03.001.002	1-50-47-4	SYS 50 ISO 47		PT	NDE-35	SS	02.90 00.375	-----	REQUEST FOR RELIEF ONS-005

DUKE POWER COMPANY
QUALITY ASSURANCE DEPARTMENT
PRE-SERVICE AND IN-SERVICE INSPECTION SYSTEM
OCONEE 1 INSERVICE INSPECTION LISTING OUTAGE 13

ITEM NUMBER	ID. NUMBER	DRAWING NUMBERS	LOCS.	INSP REQ.	PROC. NUMBERS	MATERIAL TYPE/GRADE	DIAM./ THICK	CALIB BLOCK	COMMENTS
E04.001.000	**HPI SAFE END	EXAMINATIONS******** **********	_____ _____ _____	***	******* _____	***** _____	__.__ __.__	*****	********** ********** _____ _____

ITEM NUMBER	ID. NUMBER	DRAWING NUMBERS	LOCS.	INSP REQ.	PROC. NUMBERS	MATERIAL TYPE/GRADE	DIAM./ THICK	CALIB BLOCK	COMMENTS
E07.001.000	**** THERMAL STRESS	PIPING ********** EXAMINATIONS *******	***** ***** *****	***	******* *******	***** **********	__.__ __.__	____	****NRC BULLETIN 88-08***** **********
E07.001.001	1-51A-11-87	SYS. 51A ISO. 11.3		UT	NDE-600	SS	02.50 00.375	40378	INSP. 100% OF WELD & 1" B.M. (AXIAL & CIRC.)
E07.001.002	1-51A-11-88	SYS. 51A ISO. 11.3		UT	NDE-600	SS	02.50 00.375	40378	INSP. 100% OF WELD & 1" B.M. (AXIAL & CIRC.)
E07.001.003	1-51A-11-89	SYS. 51A ISO. 11.3		UT	NDE-600	SS	02.50 00.375	40378	INSP. 100% OF WELD & 1" B.M. (AXIAL & CIRC.)
E07.001.004	1-51A-11-90	SYS. 51A ISO. 11.3		UT	NDE-600	SS	02.50 00.375	40378	INSP. 100% OF WELD & 1" B.M. (AXIAL & CIRC.)
E07.001.007	1-51A-10-1	SYS 51A ISO 10		UT	NDE-600	SS	02.50 00.375	40378	INSP. 100% OF WELD & 1" B.M. (AXIAL & CIRC.)
E07.001.008	1-51A-10-2	SYS 51A ISO 10		UT	NDE-600	SS	02.50 00.375	40378	INSP. 100% OF WELD & 1" B.M. (AXIAL & CIRC.)
E07.001.009	1-51A-10-6	SYS 51A ISO 10		UT	NDE-600	SS	02.50 00.375	40378	INSP. 100% OF WELD & 1" B.M. (AXIAL & CIRC.)

ITEM NUMBER	ID. NUMBER	DRAWING NUMBERS	LOCS.	INSP REQ.	PROC. NUMBERS	MATERIAL TYPE/GRADE	DIAM./ THICK	CALIB BLOCK	COMMENTS
E07.001.010	1-51A-5-81C	SYS 51A ISO 5		UT	NDE-600	SS	02.50 00.375	40378	INSP. 100% OF WELD & 1" B.M. (AXIAL & CIRC.)
E07.001.011	1-51A-5-79C	SYS 51A ISO 5		UT	NDE-600	SS	02.50 00.375	40378	INSP. 100% OF WELD & 1" B.M. (AXIAL & CIRC.)
E07.001.012	1-51A-5-77C	SYS 51A ISO 5		UT	NDE-600	SS	02.50 00.375	40378	INSP. 100% OF WELD & 1" B.M. (AXIAL & CIRC.)

ITEM NUMBER	ID. NUMBER	DRAWING NUMBERS	LOCS.	INSP REQ.	PROC. NUMBERS	MATERIAL TYPE/GRADE	DIAM./ THICK	CALIB BLOCK	COMMENTS
E09.001.000	*AUXILIARY FEEDWATER	HEADER********** **********	***** ***** *****	***		*****	__.__ __.__		*(PSC-21-82) WATER********** *HAMMER EXAMINATIONS**********
E09.001.001	1-03A-11-157D	SYS03 ISO 11		MT	NDE-25	CS	03.00 00.300		1A AUX. FDWTR. HEADER 3" FLANGE-TO-ELL
E09.001.002	1-03A-11-2VEN	SYS03 ISO 11		MT	NDE-25	CS	04.00 00.938		1A AUX. FDWTR. HEADER 3" FLANGE NOZZLE TO 6" HEADER
E09.001.003	1-03A-11-156D	SYS03 ISO 11		MT	NDE-25	CS	03.00 00.300		1A AUX. FDWTR. HEADER 3" FLANGE-TO-ELL
E09.001.004	1-03A-11-3VEN	SYS03 ISO 11		MT	NDE-25	CS	04.00 00.938		1A AUX. FDWTR. HEADER 3" FLANGE NOZZLE TO 6" HEADER
E09.001.005	1-03A-11-155D	SYS03 ISO 11		MT	NDE-25	CS	03.00 00.300		1A AUX. FDWTR. HEADER 3" FLANGE-TO-ELL
E09.001.006	1-03A-11-4VEN	SYS03 ISO 11		MT	NDE-25	CS	04.00 00.938		1A AUX. FDWTR. HEADER 3" FLANGE NOZZLE TO 6" HEADER
E09.001.007	1-03A-11-154D	SYS03 ISO 11		MT	NDE-25	CS	03.00 00.300		1A AUX. FDWTR. HEADER 3" FLANGE-TO-ELL

ITEM NUMBER	ID. NUMBER	DRAWING NUMBERS	LOCS.	INSP REQ.	PROC. NUMBERS	MATERIAL TYPE/GRADE	DIAM./ THICK	CALIB BLOCK	COMMENTS
E09.001.008	1-03A-11-5VEN	SYS 03 ISO 11		MT	NDE 25	CS	04.00 00.938		1A AUX. FDWTR HEADER 3" FLANGE NOZZLE TO 6" HEADER
E09.001.009	1-03A-11-153D	SYS 03 ISO 11		MT	NDE 25	CS	03.00 00.300		1A AUX. FDWTR HEADER 3" FLANGE-TO-ELL
E09.001.010	1-3A-11-6VEN	SYS 03 ISO 11		MT	NDE 25	CS	04.00 00.938		1A AUX FDWTR HEADER 3" FLANGE NOZZLE TO 6" HEADER
E09.001.011	1-03A-11-152D	SYS 03 ISO 11		MT	NDE 25	CS	03.00 00.300		1A AUX. FDWTR HEADER 3" FLANGE-TO-ELL
E09.001.012	1-03A-11-7VEN	SYS 03 ISO 11		MT	NDE 25	CS	04.00 00.938		1A AUX. FDWTR HEADER 3" FLANGE NOZZLE TO 6" HEADER
E09.001.013	1-03A-11-151D	SYS 03 ISO 11		MT	NDE 25	CS	03.00 00.300		1A AUX. FDWTR HEADER 3" FLANGE-TO-ELL
E09.001.014	1-03A-11-8VEN	SYS 03 ISO 11		MT	NDE 25	CS	04.00 00.938		1A AUX. FDWTR HEADER 3" FLANGE NOZZLE TO 6" HEADER

DUKE POWER COMPANY
QUALITY ASSURANCE DEPARTMENT
PRE-SERVICE AND IN-SERVICE INSPECTION SYSTEM
OCONEE 1 INSERVICE INSPECTION LISTING OUTAGE 13

ITEM NUMBER	ID. NUMBER	DRAWING NUMBERS	LOCS.	INSP REQ.	PROC. NUMBERS	MATERIAL TYPE/GRADE	DIAM./ THICK	CALIB BLOCK	COMMENTS
F1.01.000	********** CLASS 1	SUPPORTS********** **********		***	*******	*****	__.__ __.__	*****	********** **********
F1.01.060	1-51A-H2B	0-479A		VT	QAL-14	-----	02.50	-----	HIGH PRESS INJ. - RIGID 51A-0-479A-H2B
F1.01.061	1-51A-H1B	0-479A		VT	QAL-14	-----	02.50	-----	HIGH PRESS INJ. - SPRING 51A-0-479A-H1B
F1.01.063	1-51A-H16B	0-479A		VT	QAL-14		02.50		HIGH PRESS INJ. - RIGID 51A-0-479A-H16B
F1.01.066	1-51A-H13B	0-479A		VT	QAL-14		02.50		HIGH PRESS INJ. - SPRING 51A-0-479A-H13B
F1.01.067	1-51A-H6238	0-478A		VT	QAL-14		02.50		HIGH PRESS INJ. - SPRING 1-51A-478A-H6238
F1.01.069	1-51A-H8C	0-478A		VT	QAL-14		02.50		HIGH PRESS INJ. - RIGID 51-0-478A-H8C
F1.01.091	1-51A-H16A	0-479A		VT	QAL-14		02.50		HIGH PRESS INJ. - RIGID 51A-0-479A-H16A

DUKE POWER COMPANY
QUALITY ASSURANCE DEPARTMENT
PRE-SERVICE AND IN-SERVICE INSPECTION SYSTEM
OCONEE 1 INSERVICE INSPECTION LISTING OUTAGE 13

ITEM NUMBER	ID. NUMBER	DRAWING NUMBERS	LOCS.	INSP REQ.	PROC. NUMBERS	MATERIAL TYPE/GRADE	DIAM./ THICK	CALIB BLOCK	COMMENTS
F1.01.092	1-51A-H10A	O-479A		VT	QAL-14		02.50		HIGH PRESS INJ - SPRING 51A-O-479A-H10A
F1.01.093	1-51A-H12B	O-479A		VT	QAL-14		02.50		HIGH PRESS INJ.-RIGID 51A-O-479A-H12B
F1.01.151	1-53A-H5A	O-478A		VT	QAL-14		10.00		LOW PRESS INJ. - RIGID 53A-O-478A-H5A
F1.01.152	1-53A-H6A	O-478A		VT	QAL-14		10.00		LOW PRESS INJ. - SPRING 53A-O-478A-H6A
F1.01.153	1-53A-H7A	O-479A		VT	QAL-14		10.00		LOW PRESS INJ. - RIGID 53A-O-479A-H7A
F1.01.200	1-53A-H3A	O-478A		VT	QAL-14		14.00		CORE FLOOD - SPRING 53A-O-478A-H3A
F1.01.201	1-53A-H2A	O-478A		VT	QAL-14		14.00		CORE FLOOD - RIGID 53A-O-478A-H2A
F1.01.203	1-53A-2701	O-478A		VT	QAL-14		14.00		CORE FLOOD - RIGID 53A-O-478A-GPD-2701

ITEM NUMBER	ID. NUMBER	DRAWING NUMBERS	LOCS.	INSP REQ.	PROC. NUMBERS	MATERIAL TYPE/GRADE	DIAM./ THICK	CALIB BLOCK	COMMENTS
F1.01.225	1SGB-SKIRT	OM-201-1873 ISI-OCN1-004		VT	QCL-14		__.__		1SGB SUPPORT SKIRT
F1.02.000	********** CLASS 2	SUPPORTS********** **********		***	*******	*****	__.__	*****	********** **********
F1.02.041	1-01A-H6B	0-480A		VT	QAL-14	-----	26.18	-----	MAIN STEAM B - RIGID 1-01A-0-481A-H6B
F1.02.048	1-01A-H13	0-550		VT	QAL-14	-----	36.50	-----	MAIN STEAM B - RIGID 1-01A-0-550-H13
F1.02.049	1-01A-H14	0-550		VT	QAL-14	-----	36.50	-----	MAIN STEAM B - RIGID 1-01A-0-550-H14
F1.02.050	1-01A-H15	0-550		VT	QAL-14	-----	36.50	-----	MAIN STEAM B - RIGID 1-01A-0-550-H15
F1.02.051	1-01A-R8	0-550		VT	QAL-14	-----	36.50	-----	MAIN STEAM B - RIGID 1-01A-0-550-R8
F1.02.057	1-01A-DE005	0-550		VT	QAL-14	-----	36.00	-----	MAIN STEAM B - MECH. SUPP. 1-01A-0-550-DE005

DUKE POWER COMPANY
QUALITY ASSURANCE DEPARTMENT
PRE-SERVICE AND IN-SERVICE INSPECTION SYSTEM
OCONEE 1 INSERVICE INSPECTION LISTING OUTAGE 13

ITEM NUMBER	ID. NUMBER	DRAWING NUMBERS	LOCS.	INSP REQ.	PROC. NUMBERS	MATERIAL TYPE/GRADE	DIAM./ THICK	CALIB BLOCK	COMMENTS
F1.02.058	1-01A-H17	0-550		VT	QAL-14	-----	36.50	-----	MAIN STEAM B - RIGID 1-01A-0-550-H17
F1.02.059	1-01A-H18	0-550		VT	QAL-14	-----	36.50	-----	MAIN STEAM B - SPRING 1-01A-0-550-H18
F1.02.066	1-01A-R12	0-550		VT	QAL-14	-----	36.50	-----	MAIN STEAM B - H.S.S. SUPP. 1-01A-0-550-R12
F1.02.067	1-01A-H23	0-550		VT	QAL-14	-----	36.50	-----	MAIN STEAM B - SWAY STRUT 1-01A-0-550-H23
F1.02.068	1-01A-H22	0-401A		VT	QAL-14	-----	12.00	-----	MAIN STEAM B - SPRING 1-01A-3-0-401A-H22
F1.02.073	1-01A-H40	0-401A		VT	QAL-14	-----	12.00	-----	MAIN STEAM B - H.S.S. SUPP. 1-01A-1-1-0-401A-H40
F1.02.074	1-01A-H1	0-401A		VT	QAL-14	-----	12.00	-----	MAIN STEAM B - SPRING 1-01A-1-1-0-401A-H1
F1.02.075	1-01A-H14	0-401A		VT	QAL-14	-----	__.__	-----	MAIN STREAM B - SPRING 1-01A-0-401A-EMO-H14

ITEM NUMBER	ID. NUMBER	DRAWING NUMBERS	LOCS.	INSP REQ.	PROC. NUMBERS	MATERIAL TYPE/GRADE	DIAM./ THICK	CALIB BLOCK	COMMENTS
F1.02.104	1-03-H9A	0-479A		VT	QAL-14	-----	20.00	-----	MAIN FDWTR A - RIGID 03-0-479A-H9A
F1.02.105	1-03-H1A	0-479A		VT	QAL-14	-----	14.00	-----	MAIN FDWTR A - SPRING 03-0-479A-H1A
F1.02.126	1-03-H11B	0-481A		VT	QAL-14		24.00		MAIN FDWTR B - RIGID 03-0-481A-H11B
F1.02.311	1-53B-H33	0-439C		VT	QAL-14	-----	10.00	-----	DECAY HEAT - RIGID 1-53B-5-0-439C-H33
F1.02.312	1-53B-R15	0-439C		VT	QAL-14	-----	10.00	-----	DECAY HEAT - RIGID 1-53B-5-0-439C-R15
F1.02.314	1-53B-R14	0-439		VT	QAL-14	-----	10.00	-----	DECAY HEAT - RIGID 1-53B-5-0-439-R14
F1.02.334	1-53B-R16	0-436D		VT	QAL-14	-----	10.00	-----	DECAY HEAT - RIGID 1-53B-5-0-436D-R16
F1.02.350	1-53B-R22	0-436D		VT	QAL-14	-----	10.00	-----	DECAY HEAT - RIGID 1-53B-5-0-436D-R22

DUKE POWER COMPANY
QUALITY ASSURANCE DEPARTMENT
PRE-SERVICE AND IN-SERVICE INSPECTION SYSTEM
OCONEE 1 INSERVICE INSPECTION LISTING OUTAGE 13

ITEM NUMBER	ID. NUMBER	DRAWING NUMBERS	LOCS.	INSP REQ.	PROC. NUMBERS	MATERIAL TYPE/GRADE	DIAM./ THICK	CALIB BLOCK	COMMENTS
F1.02.351	1-53B-H8	0-436D		VT	QAL-14	-----	10.00	-----	DECAY HEAT - SWAY STRUT 1-53B-5-0-436D-H8
F1.02.352	1-53B-H64	0-444		VT	QAL-14	-----	08.00	-----	DECAY HEAT - SPRING 1-53B-4-0-444-H64
F1.02.356	1-53B-R25	0-435B		VT	QAL-14	-----	10.00	-----	DECAY HEAT - RIGID 1-53B-5-0-435B-R25
F1.02.358	1-53B-R24	0-435B		VT	QAL-14	-----	10.00	-----	DECAY HEAT - RIGID 1-53B-5-0-435B-R24
F1.02.360	1-53B-DE056	0-435B		VT	QAL-14	-----	10.00	-----	DECAY HEAT - MECH. SHOCK SWAY 1-53B-0-435B-DE056
F1.02.361	1-53B-DE044	0-435B		VT	QAL-14	-----	10.00	-----	DECAY HEAT - RIGID 1-53B-435B-DE044
F1.02.363	1-53B-H4	0-435B		VT	QAL-14	-----	10.00	-----	DECAY HEAT - SPRING 1-53B-5-0-435B-H4
F1.02.377	1-53B-H28	0-435B		VT	QAL-14	-----	08.00	-----	DECAY HEAT - SPRING 1-53B-4-0-435B-H28

ITEM NUMBER	ID. NUMBER	DRAWING NUMBERS	LOCS.	INSP REQ.	PROC. NUMBERS	MATERIAL TYPE/GRADE	DIAM./ THICK	CALIB BLOCK	COMMENTS
F1.02.378	1-53B-DE064	O-435B		VT	QAL-14	-----	08.00	-----	DECAY HEAT - RIGID 1-53B-O-435B-DE064
F1.02.379	1-53B-H29	O-435B		VT	QAL-14	-----	08.00	-----	DECAY HEAT - SPRING 1-53B-4-O-435B-H29
F1.02.381	1-53B-DE061	O-435B		VT	QAL-14	-----	14.00	-----	LPI - RIGID 1-53B-0435B-DE061
F1.02.397	1-53B-H62	O-444		VT	QAL-14	-----	08.00	-----	DECAY HEAT - RIGID 1-53B-4-O-444-H62
F1.02.398	1-53B-H63	O-436D		VT	QAL-14	-----	08.00	-----	DECAY HEAT - SWAY STRUT 1-53B-4-O-436-H63
F1.02.400	1-53B-H30	O-436D		VT	QAL-14	-----	__.__	-----	DECAY HEAT - SPRING 1-53B-O-436D-EMO-H30
F1.02.402	1-53B-2601	O-435B		VT	QAL-14	-----	14.00	-----	DECAY HEAT - RIGID 1-53B-435B-DM-2601 RFO#13 IWF2420(B)PIR 1-87-0160
F1.02.451	1-54A-DE04	O-435B		VT	QAL-14	-----	08.00	-----	REACTOR BLDG. SPRAY - RIGID INSP RFO #13 PER IWF 2430(A) ADDED PER IWF-2430(A)

DUKE POWER COMPANY
QUALITY ASSURANCE DEPARTMENT
PRE-SERVICE AND IN-SERVICE INSPECTION SYSTEM
OCONEE 1 INSERVICE INSPECTION LISTING OUTAGE 13

ITEM NUMBER	ID. NUMBER	DRAWING NUMBERS	LOCS.	INSP REQ.	PROC. NUMBERS	MATERIAL TYPE/GRADE	DIAM./ THICK	CALIB BLOCK	COMMENTS
F1.02.462	1-54A-435B-H32	0-435B		VT	QAL-14	-----	08.00	-----	REACTOR BLDG. SPRAY - RIGID INSP RFO #13 PER IWF 2430(A) ADDED PER IWF-2430(A)
F1.02.464	1-54A435B-DE11	0-435B		VT	QAL-14	-----	08.00	-----	REACTOR BLDG. SPRAY - RIGID INSP RFO #13 PER IWF 2430(A) ADDED PER IWF-2430(A)
F1.02.467	1-54A-R8	0-435B		VT	QAL-14	-----	08.00	-----	REACT. BLDG. SPRAY-SWAY STRUT INSP RFO #13 PER IWF 2430(A) ADDED PER IWF-2430(A)
F1.02.470	1-54A-436D-H3	0-436D		VT	QAL-14	-----	08.00	-----	REACTOR BUILDING SPRAY-RIGID INSP RFO #13 PER IWF 2430(A) ADDED PER IWF-2430(A)
F1.02.474	1-54A-437A-R7	0-436D		VT	QAL-14	-----	08.00	-----	REACTOR BUILDING SPRAY-RIGID INSP RFO #13 PER IWF 2430(A) ADDED PER IWF-2430(A)
F1.02.476	1-54A-R22	0-444		VT	QAL-14	-----	08.00	-----	REACTOR BUILDING SPRAY-ANCHOR 1-54A-3-0-444-R22
F1.02.477	1-54A-435B-H23	0-435B		VT	QAL-14	-----	08.00	-----	REACTOR BUILDING SPRAY-SPRING INSP RFO #13 PER IWF 2430(A) ADDED PER IWF-2430(A)
F1.02.478	1-54A-DE10	0-435B		VT	QAL-14	-----	08.00	-----	REACT. BLDG. SPRAY-SWAY STRUT 1-54A-0-435B-DE10 PIR 1-091-0083

ITEM NUMBER	ID. NUMBER	DRAWING NUMBERS	LOCS.	INSP REQ.	PROC. NUMBERS	MATERIAL TYPE/GRADE	DIAM./ THICK	CALIB BLOCK	COMMENTS
F1.02.479	1-54A-R3	0-435B		VT	QAL-14	-----	08.00	-----	REACTOR BLDG. SPRAY - RIGID 1-54A-3-0-435B-R3
F1.02.480	1-54A-DE06	0-435B		VT	QAL-14	-----	08.00	-----	REACTOR BLDG. SPRAY - RIGID 1-54A-0-435B-DE06
F1.02.481	1-54A-DE020	0-435B		VT	QAL-14	-----	08.00	-----	REACTOR BLDG. SPRAY - MECH. 1-54A-435B-DE020
F1.02.482	1-54A-435B-R2	0-435B		VT	QAL-14	-----	08.00	-----	REACTOR BLDG. SPRAY - RIGID INSP RFO #13 PER IWF 2430(A) ADDED PER IWF-2430(A)
F1.02.483	1-54A435B-DE05	0-435B		VT	QAL-14	-----	08.00	-----	REACTOR BLDG. SPRAY - RIGID INSP RFO #13 PER IWF 2430(A) ADDED PER IWF-2430(A)
F1.02.484	1-54A435B-DE02	0-435B		VT	QAL-14	-----	08.00	-----	REACTOR BLDG. SPRAY - RIGID INSP RFO #13 PER IWF 2430(A) ADDED PER IWF-2430(A)
F1.02.490	1-54A-H24	0-439A		VT	QAL-14	-----	08.00	-----	REACTOR BLDG. SPRAY - RIGID INSP RFO #13 PER IWF 2430(A) ADDED PER IWF-2430(A)
F1.02.491	1-54A-H23	0-439A		VT	QAL-14	-----	08.00	-----	REACTOR BLDG. SPRAY - RIGID INSP RFO #13 PER IWF 2430(A) ADDED PER IWF-2430(A)

ITEM NUMBER	ID. NUMBER	DRAWING NUMBERS	LOCS.	INSP REQ.	PROC. NUMBERS	MATERIAL TYPE/GRADE	DIAM./ THICK	CALIB BLOCK	COMMENTS
F1.02.492	1-54A-H21	0-439A		VT	QAL-14	-----	08.00	-----	REACTOR BLDG. SPRAY - RIGID INSP RFO #13 PER IWF 2430(A) ADDED PER IWF-2430(A)
F1.02.496	1-54A-R15	0-444		VT	QAL-14	-----	08.00	-----	REACTOR BLDG. SPRAY - RIGID 1-54A-0-444-R15
F1.02.497	1-54A-R13	0-439A		VT	QAL-14	-----	08.00	-----	REACTOR BLDG. SPRAY-SWAY STRUT 1-54A-0-439A-R13
F1.02.504	1-54A-H6	0-439C		VT	QAL-14	-----	08.00	-----	REACTOR BLDG. SPRAY - RIGID 1-54A-3-0-439C-H6
F1.02.505	1-54A-H7	0-439C		VT	QAL-14	-----	08.00	-----	REACTOR BLDG. SPRAY - RIGID 1-54A-3-0-439C-H7
F1.02.511	1-54A-H11	0-439C		VT	QAL-14	-----	08.00	-----	REACTOR BLDG. SPRAY - RIGID 1-54A-3-0-439C-H11
F1.02.513	1-54A-H13	0-439C		VT	QAL-14	-----	08.00	-----	REACTOR BLDG. SPRAY - RIGID 1-54A-3-0-439C-H13
F1.02.514	1-54A-R21	0-439A		VT	QAL-14	-----	08.00	-----	REACTOR BLDG. SPRAY - ANCHOR 1-54A-0-439A-R21

DUKE POWER COMPANY
QUALITY ASSURANCE DEPARTMENT
PRE-SERVICE AND IN-SERVICE INSPECTION SYSTEM
OCONEE 1 INSERVICE INSPECTION LISTING OUTAGE 13

ITEM NUMBER	ID. NUMBER	DRAWING NUMBERS	LOCS.	INSP REQ.	PROC. NUMBERS	MATERIAL TYPE/GRADE	DIAM./ THICK	CALIB BLOCK	COMMENTS
F1.02.550	1-55-SR12	0-439C		VT	QAL-14	-----	08.00	-----	COMPONENT COOLING RIGID 1-55-1-0-439C-SR-12
F1.02.551	1-55-H32	0-439C		VT	QAL-14	-----	08.00	-----	REACTOR BLDG. SPRAY - RIGID 1-55-1-0-439C-H32
F1.02.552	1-54A-DE01	0-435B		VT	QAL-14		08.00		REACTOR BLDG SPRAY-RIGID INSP RFO #13 PER IWF 2430(A) ADDED PER IWF-2430(A)
F1.03.000	********** CLASS 3	SUPPORTS ********** **********		***	*******				**********
F1.03.010	1-01A-DE003	0-403C		VT	QAL-14	-----	06.00	-----	STEAM SUPPLY - SWAY STRUT 1-01A-403C-DE003
F1.03.011	1-01A-DE002	0-403C		VT	QAL-14	-----	06.00	-----	STEAM SUPPLY - SWAY STRUT 1-01A-403C-DE002
F1.03.013	1-01A-R2	0-403C		VT	QAL-14	-----	06.00	-----	STEAM SUPPLY - MECH. SUPP. 1-01A-4-2-0-403C-R2
F1.03.014	1-01A-DE008	0-401A		VT	QAL-14	-----	06.00	-----	STEAM SUPPLY - RIGID 1-01A-401A-DE008

DUKE POWER COMPANY
QUALITY ASSURANCE DEPARTMENT
PRE-SERVICE AND IN-SERVICE INSPECTION SYSTEM
OCONEE 1 INSERVICE INSPECTION LISTING OUTAGE 13

ITEM NUMBER	ID. NUMBER	DRAWING NUMBERS	LOCS.	INSP REQ.	PROC. NUMBERS	MATERIAL TYPE/GRADE	DIAM./ THICK	CALIB BLOCK	COMMENTS
F1.03.015	1-01A-H4	0-401A		VT	QAL-14	-----	06.00	-----	STEAM SUPPLY - SPRING 1-01A-4-0-401A-H4
F1.03.059	1-03-H58	0-551		VT	QAL-14	-----	24.00	-----	MAIN FDWTR - SPRING 1-03-0-551-H58
F1.03.060	1-03-H59	0-551		VT	QAL-14	-----	24.00	-----	MAIN FDWTR - SPRING 1-03-0-551-H59
F1.03.061	1-03-R13	0-551		VT	QAL-14	-----	24.00	-----	MAIN FDWTR - MECH. SUPP. 1-03-0-551-R13
F1.03.062	1-03-H65	0-551		VT	QAL-14	-----	24.00	-----	MAIN FDWTR - RIGID 1-03-0-551-H65
F1.03.063	1-03-R12	0-551		VT	QAL-14	-----	24.00	-----	MAIN FDWTR - HYD. S. S. SUPP. 1-03-0-551-R12
F1.03.072	1-03A-SR96	0437A		VT	QCL-14		06.00		EMER. FDWTR. - RIGID 1-03A-1-0-437A-SR96
F1.03.101	1-03A-DE004	0-401A		VT	QAL-14	-----	06.00	-----	EMER. FDWTR. - SWAY STRUT 1-03A-401A-DE004

DUKE POWER COMPANY
QUALITY ASSURANCE DEPARTMENT
PRE-SERVICE AND IN-SERVICE INSPECTION SYSTEM
OCONEE 1 INSERVICE INSPECTION LISTING OUTAGE 13

ITEM NUMBER	ID. NUMBER	DRAWING NUMBERS	LOCS.	INSP REQ.	PROC. NUMBERS	MATERIAL TYPE/GRADE	DIAM./ THICK	CALIB BLOCK	COMMENTS
F1.03.102	1-03A-DE058	0-401A		VT	QAL-14	-----	06.00	-----	EMER. FDWTR. - MECH. SHOCK SUP 1-03A-401A-DE058
F1.03.103	1-03A-DE005	0-401A		VT	QAL-14	-----	06.00	-----	EMER. FDWTR. - RIGID 1-03A-401A-DE005
F1.03.123	1-03A-DE060	0-439A		VT	QAL-14	-----	06.00	-----	EMER. FDWTR. - MECH. SUPP. 1-03A-1-0-439A-DE060
F1.03.129	1-03A-DE041	0-401B		VT	QAL-14	-----	06.00	-----	EMER. FDWTR. - RIGID 1-03A-401B-DE041
F1.03.130	1-03A-DE042	0-401B		VT	QAL-14	-----	06.00	-----	EMER. FDWTR. - RIGID 1-03A-401B-DE042
F1.03.131	1-03A-SR32	0-401B		VT	QAL-14	-----	06.00	-----	EMER. FDWTR. - SWAY STRUT 1-03A-401B-SR32
F1.03.138	1-03A-SR30	0-401B		VT	QAL-14	-----	06.00	-----	EMER. FDWTR. - RIGID 1-03A-1-0-401B-SR30
F1.03.139	1-03A-DE048	0-401B		VT	QAL-14	-----	06.00	-----	EMER. FDWTR. - RIGID 1-03A-401B-DE048

DUKE POWER COMPANY
QUALITY ASSURANCE DEPARTMENT
PRE-SERVICE AND IN-SERVICE INSPECTION SYSTEM
OCONEE 1 INSERVICE INSPECTION LISTING OUTAGE 13

ITEM NUMBER	ID. NUMBER	DRAWING NUMBERS	LOCS.	INSP REQ.	PROC. NUMBERS	MATERIAL TYPE/GRADE	DIAM./ THICK	CALIB BLOCK	COMMENTS
F1.03.140	1-03A-0501	0-401B		VT	QAL-14	-----	06.00	-----	EMER. FDWTR. - RIGID 1-03A-401B-AM-0501
F1.03.141	1-03A-SR26	0-401B		VT	QAL-14	-----	06.00	-----	EMER. FDWTR. - RIGID 1-03A-1-0-401B-SR26
F1.03.144	1-03A-SR48	0-439B		VT	QAL-14	-----	06.00	-----	EMER. FDWTR. - RIGID 1-03A-1-0-439B-SR48
F1.03.146	1-03A-H15	0-439B		VT	QAL-14	-----	06.00	-----	EMER. FDWTR. - SWAY STRUT 1-03A-1-0-439B-H15
F1.03.147	1-03A-SR49	0-439B		VT	QAL-14	-----	06.00	-----	EMER. FDWTR. - RIGID 1-03A-1-0-439B-SR49
F1.03.149	1-03A-H103	0-439A		VT	QAL-14	-----	06.00	-----	EMER. FDWTR. - SPRING 1-03A-1-0-439A-H103
F1.03.163	1-03A-H6070	0-480A		VT	QAL-14	-----	06.00	-----	EMER. FDWTR. MSS 1-03A-480A-H6070
F1.03.164	1-03A-H6178	0-480A		VT	QAL-14	-----	06.00	-----	EMER. FDWTR - SPRING 1-03-480A-H6178

DUKE POWER COMPANY
QUALITY ASSURANCE DEPARTMENT
PRE-SERVICE AND IN-SERVICE INSPECTION SYSTEM
OCONEE 1 INSERVICE INSPECTION LISTING OUTAGE 13

ITEM NUMBER	ID. NUMBER	DRAWING NUMBERS	LOCS.	INSP REQ.	PROC. NUMBERS	MATERIAL TYPE/GRADE	DIAM./ THICK	CALIB BLOCK	COMMENTS
F1.03.165	1-03A-H6177	0-480A		VT	QAL-14	-----	06.00	-----	EMER. FDWTR.-MSS 1-03-480A-H6177
F1.03.166	1-03A-H6011	0-480A		VT	QAL-14	-----	06.00	-----	EMER. FDWTR - SPRING 1-03-480A-H6011
F1.03.173	1-03A-SR96	0-439B		VT	QAL-14	-----	06.00	-----	EMER. FDWTR - RIGID 1-03A-1-0-439B-SR96
F1.03.174	1-03A-H79	0-439B		VT	QAL-14	-----	06.00	-----	EMER. FDWTR - RIGID 1-03A-1-0-439B-H79
F1.03.193	1-03A-JWC-0301	0-437B		VT	QAL-14	-----	06.00	-----	EMER. FDWTR. - SWAY STRUT 1-03A-0-437B-JWC-0301
F1.03.194	1-03A-H53	0-400B		VT	QAL-14	-----	06.00	-----	EMER. FDWTR. - RIGID 1-03A-1-0-400B-H53
F1.03.196	1-03A-SR84	0-400B		VT	QAL-14		06.00		EMER. FDWTR -RIGID 1-03-1-0-400B-SR84
F1.03.200	1-03A-DE062	0-400B		VT	QAL-14	-----	06.00	-----	EMER. FDWTR. - ANCHOR 1-03A-1-0-400B-DE062

ITEM NUMBER	ID. NUMBER	DRAWING NUMBERS	LOCS.	INSP REQ.	PROC. NUMBERS	MATERIAL TYPE/GRADE	DIAM./ THICK	CALIB BLOCK	COMMENTS
F1.03.203	1-03A-H102	0-439C		VT	QAL-14	-----	06.00	-----	EMER. FDWTR. - RIGID 1-03A-1-0-439C-H102
F1.03.204	1-03A-H54	0-400B		VT	QAL-14	-----	06.00	-----	EMER. FDWTR. - RIGID 1-03A-1-0-400B-H54
F1.03.205	1-03A-SR85	0-400B		VT	QAL-14	-----	06.00	-----	EMER. FDWTR. - RIGID 1-03A-1-0-400B-SR85
F1.03.206	1-03A-H55	0-400B		VT	QAL-14	-----	06.00	-----	EMER. FDWTR. - RIGID 1-03A-1-0-400B-H55
F1.03.213	1-03A-H59	0-400B		VT	QAL-14	-----	06.00	-----	EMER. FDWTR. - RIGID 1-03A-1-0-400B-H59
F1.03.215	1-03A-SR59	0-400B		VT	QAL-14	-----	06.00	-----	EMER. FDWTR. - HYD. SHOCK SUPP 1-03A-1-0-400B-SR59
F1.03.216	1-03A-SR58	0-400B		VT	QAL-14	-----	06.00	-----	EMER. FDWTR. - HYD. S.S. SUPP. 1-03A-1-0-400B-SR58
F1.03.219	1-03A-0200	0-400A		VT	QAL-14	-----	06.00	-----	EMER. FDWTR. - RIGID 1-03A-400A-ADM-0200

ITEM NUMBER	ID. NUMBER	DRAWING NUMBERS	LOCS.	INSP REQ.	PROC. NUMBERS	MATERIAL TYPE/GRADE	DIAM./ THICK	CALIB BLOCK	COMMENTS
F1.03.222	1-03A-SR53	0-400A		VT	QAL-14	-----	06.00	-----	EMER. FDWTR. - HYD. S.S. SUPP. 1-03A-1-0-400A-SR53
F1.03.225	1-03A-H38	0-400A		VT	QAL-14	-----	06.00	-----	EMER. FDWTR. - SPRING 1-03A-1-0-400A-H38
F1.03.233	1-03A-H44	0-401A		VT	QAL-14	-----	06.00	-----	EMER. FDWTR - SWAY STRUT 1-03A-1-0-401A-H44
F1.03.234	1-03A-H45	0-401A		VT	QAL-14	-----	06.00	-----	EMER. FDWTR - RIGID 1-03A-1-0-401A-H45
F1.03.243	1-03A-H49	0-400A		VT	QAL-14	-----	06.00	-----	EMER. FDWTR - RIGID 1-03A-1-0-400A-H49
F1.03.245	1-03A-SR61	0-437A		VT	QAL-14	-----	06.00	-----	EMER. FDWTR - SWAY STRUT 1-03A-1-0-437A-SR61
F1.03.313	1-03A-SR19	0-401A		VT	QAL-14	-----	06.00	-----	EMER. FDWTR - RIGID 1-03A-1-0-401A-SR19
F1.03.369	1-03A-H146	0-400A		VT	QAL-14	-----	06.00	-----	EMER. FDWTR - RIGID 1-03A-1-0-400A-H146

DUKE POWER COMPANY
QUALITY ASSURANCE DEPARTMENT
PRE-SERVICE AND IN-SERVICE INSPECTION SYSTEM
OCONEE 1 INSERVICE INSPECTION LISTING OUTAGE 13

ITEM NUMBER	ID. NUMBER	DRAWING NUMBERS	LOCS.	INSP REQ.	PROC. NUMBERS	MATERIAL TYPE/GRADE	DIAM./ THICK	CALIB BLOCK	COMMENTS
F1.03.451	1-07A-DE027	0-402A		VT	QAL-14	-----	08.00	-----	LP & HP CONDENSATE - RIGID 1-07A-402A-DE027
F1.03.452	1-07A-DE009	0-400B		VT	QAL-14	-----	08.00	-----	LP & HP CONDENSATE - RIGID 1-07A-400B-DE009
F1.03.453	1-07A-DE010	0-400B		VT	QAL-14	-----	08.00	-----	LP & HP CONDENSATE - RIGID 1-07A-400B-DE010
F1.03.472	1-07A-H6	0-402		VT	QAL-14	-----	30.00	-----	LP & HP CONDENSATE - SPRING 1-07A-6-0-402A-H6
F1.03.473	1-07A-H7	0-402		VT	QAL-14	-----	30.00	-----	LP & HP CONDENSATE - SPRING 1-07A-6-0-402A-H7
F1.03.474	1-07A-DE029	0-402A		VT	QAL-14		08.00		LP & HP CONDENSATE -RIGID 1-07A-402A-DE029
F1.03.477	1-07A-DE058	0-400B		VT	QAL-14		08.00		LP & HP CONDENSATE-RIGID 1-07A-400B-DE058

4.0 Results Of Inspections Performed During Outage 13

The results of each inspection shown in the final ISI Plan (Section 3 of this report) are included in this section. The completion date and status for each inspection are shown. All inspections revealing reportable indications are described in further detail in Section 5, 6, or 7 as applicable.

The information shown below is a field description for the reporting format included in this section of the report:

Item Number = ASME Section XI Tables IWB-2500-1 (Class 1), IWC-2500-1 (Class 2), IWD-2500-1 (Class 3), IWF-2500-1 (Class 1, Class 2 and Class 3), Augmented and Alternate Requirements

ID Number = Unique Identification Number

Inspection Date = Date of Examination

Inspection Status
- CLR = Clear
- REC = Recordable
- REP = Reportable

Inspection Limited
- L = Limited
- - = No

Geo. Ref. = Geometric Reflector
- N = No
- Y = Yes

Comments = General and/or Detail Description

PROGRAM: NISIRUND-QAISI04
FILE: C007133
PLANT: OCONEE UNIT 1
KEY: ITEM NUMBER B01

DUKE POWER COMPANY
QUALITY ASSURANCE DEPARTMENT
PRE-SERVICE AND IN-SERVICE INSPECTION SYSTEM
OCONEE 1 INSERVICE INSPECTION RESULTS OUTAGE 13

DATE 12/03/91

ITEM NUMBER	ID NUMBER	INSPECTION DATE	INSPECTION STATUS	INSPECTION LIMITED	GEO. REF.	COMMENTS
B01.011.001	1RPV-WR17	08/17/91	CLR	L	N	
B01.011.002	1RPV-WR1A	08/17/91	REC	L	Y	
B01.011.003	1RPV-WR1	08/17/91	REC	_	N	
B01.011.004	1RPV-WR18	08/19/91	REC	L	Y	
B01.012.001	1RPV-A2-WR2	08/18/91	CLR	L	N	
B01.012.002	1RPV-A2-WR2A	08/19/91	CLR	L	N	
B01.012.003	1RPV-A1-WR2	08/17/91	CLR	_	N	
B01.012.004	1RPV-A1-WR2A	08/17/91	CLR	_	N	
B01.012.005	1RPV-A10-WR2	08/17/91	REC	L	Y	
B01.012.006	1RPV-A10-WR2A	08/17/91	CLR	L	N	
B01.021.002	1RPV-WR34	08/27/91	REC	L	N	
B01.030.001	1RPV-WR19	08/21/91	REC	L	Y	

ITEM NUMBER	ID NUMBER	INSPECTION DATE	INSPECTION STATUS	INSPECTION LIMITED	GEO. REF.	COMMENTS
B02.011.003	1PZR-WP4	09/03/91	REC	_	N	INSP.RFO 13 PER IWB-2420(B)
B02.011.006	1PZR-WP28	09/05/91	CLR	L	N	
B02.012.004	1PZR-WP7-1	09/03/91	CLR	L	N	
B02.012.005	1PZR-WP7-2	09/03/91	REC	L	N	
B02.040.001	1SGA-WG58-1	09/02/91	CLR	L	N	INSP. RFO 13 PER IWB-2420(B)
B02.040.004	1SGB-WG58-2	08/16/91	CLR	L	N	

DUKE POWER COMPANY
QUALITY ASSURANCE DEPARTMENT
PRE-SERVICE AND IN-SERVICE INSPECTION SYSTEM
OCONEE 1 INSERVICE INSPECTION RESULTS OUTAGE 13

ITEM NUMBER	ID NUMBER	INSPECTION DATE	INSPECTION STATUS	INSPECTION LIMITED	GEO. REF.	COMMENTS
B03.090.001	1RPV-WR13	08/21/91	REC	L	N	
B03.090.001A	1RPV-WR13	08/26/91	CLR	L	N	
B03.090.002	1RPV-WR13A	08/21/91	CLR	L	N	
B03.090.002A	1RPV-WR13A	08/23/91	REC	L	N	
B03.090.003	1RPV-WR12	08/20/91	REC	L	N	
B03.090.003A	1RPV-WR12	08/25/91	REC	L	N	
B03.090.004	1RPV-WR12A	08/20/91	REC	L	N	
B03.090.004A	1RPV-WR12A	08/22/91	REC	L	Y	
B03.090.005	1RPV-WR12B	08/21/91	CLR	L	N	
B03.090.005A	1RPV-WR12B	08/25/91	REC	L	Y	
B03.090.006	1RPV-WR12C	08/21/91	REC	L	N	
B03.090.006A	1RPV-WR12C	08/25/91	REC	L	Y	
B03.090.007	1RPV-WR54	08/25/91	REC	L	Y	
B03.090.007A	1RPV-WR54	__/__/__		_	_	INSP COVERED BY B03.090.007
B03.090.008	1RPV-WR54A	08/25/91	REC	L	Y	

ITEM NUMBER	ID NUMBER	INSPECTION DATE	INSPECTION STATUS	INSPECTION LIMITED	GEO. REF.	COMMENTS
B03.090.008A	1RPV-WR54A	__/__/__		_	_	INSP COVERED BY B03.090.008
B03.100.001	1RPV-WR13	08/26/91	CLR	L	N	
B03.100.002	1RPV-WR13A	08/23/91	CLR	L	N	
B03.100.003	1RPV-WR12	08/25/91	REC	L	Y	
B03.100.004	1RPV-WR12A	08/22/91	REC	L	Y	
B03.100.005	1RPV-WR12B	08/25/91	REC	L	Y	
B03.100.006	1RPV-WR12C	08/25/91	REC	L	N	
B03.100.007	1RPV-WR54	__/__/__		_	_	INSP COVERED BY B03.090.007
B03.100.008	1RPV-WR54A	__/__/__		_	_	INSP COVERED BY B03.090.008
B03.110.009	1PZR-WP26-1	08/28/91	CLR	L	N	
B03.110.010	1PZR-WP26-2	08/28/91	CLR	L	N	
B03.110.011	1PZR-WP26-3	08/28/91	CLR	L	N	
B03.110.012	1PZR-WP26-7	08/28/91	CLR	L	N	
B03.120.009	1PZR-WP26-1	09/04/91	CLR	L	N	
B03.120.010	1PZR-WP26-2	09/04/91	CLR	L	N	

ITEM NUMBER	ID NUMBER	INSPECTION DATE	INSPECTION STATUS	INSPECTION LIMITED	GEO. REF.	COMMENTS
B03.120.011	1PZR-WP26-3	09/04/91	CLR	L	N	
B03.120.012	1PZR-WP26-7	09/04/91	CLR	L	N	
B03.130.005	1SGA-WG25	09/02/91	CLR	L	N	
B03.130.006	1SGB-WG25	09/11/91	CLR	L	N	
B03.140.005	1SGA-WG25	09/02/91	CLR	L	N	
B03.140.006	1SGB-WG25	09/11/91	CLR	L	N	

ITEM NUMBER	ID NUMBER	INSPECTION DATE	INSPECTION STATUS	INSPECTION LIMITED	GEO. REF.	COMMENTS
B04.012.001	1RPV-CRDM	09/26/91	CLR	_	N	
B04.013.001	1RPV-INCORE	09/26/91	CLR	_	N	

DUKE POWER COMPANY
QUALITY ASSURANCE DEPARTMENT
PRE-SERVICE AND IN-SERVICE INSPECTION SYSTEM
OCONEE 1 INSERVICE INSPECTION RESULTS OUTAGE 13

ITEM NUMBER	ID NUMBER	INSPECTION DATE	INSPECTION STATUS	INSPECTION LIMITED	GEO. REF.	COMMENTS
B05.010.001A	1RPV-WP53	08/26/91	REC	_	Y	
B05.010.001B	1RPV-WR53	08/26/91	CLR	_	N	
B05.010.002A	1RPV-WR53A	08/26/91	CLR	_	N	
B05.010.002B	1RPV-WR53A	08/26/91	CLR	_	N	
B05.020.002	1PZR-WP45	08/16/91	CLR	_	N	
B05.020.002A	1PZR-WP45	08/16/91	CLR	_	N	
B05.020.002B	1PZR-WP45	08/19/91	CLR	_	N	
B05.021.002	1PZR-WP91-2	09/11/91	CLR	_	N	
B05.021.003	1PZR-WP91-3	09/11/91	CLR	_	N	
B05.050.005	1PIB1-7	08/09/91	CLR	_	N	
B05.050.005A	1PIB1-7	08/09/91	CLR	_	N	
B05.050.005B	1PIB1-7	08/06/91	CLR	_	N	
B05.050.006	1PDB1-2	08/09/91	CLR	L	N	
B05.050.006A	1PDB1-2	08/09/91	CLR	L	N	
B05.050.006B	1PDB1-2	08/07/91	CLR	_	N	

ITEM NUMBER	ID NUMBER	INSPECTION DATE	INSPECTION STATUS	INSPECTION LIMITED	GEO. REF.	COMMENTS
B05.050.011	1PSP-1	08/16/91	CLR	_	N	
B05.050.011A	1PSP-1	08/16/91	CLR	_	N	
B05.050.011B	1PSP-1	08/06/91	CLR	_	N	
B05.051.006	1PIB1-11	09/03/91	CLR	_	N	
B05.051.007	1PIB1-12	08/06/91	CLR	_	N	
B05.051.008	1PDB1-11	08/06/91	CLR	_	N	
B05.051.011	1PDB2-11	08/06/91	CLR	_	N	
B05.051.015	1PHB-13	09/12/91	CLR	_	N	
B05.051.016	1PHB-14	09/12/91	CLR	_	N	
B05.051.017	1PHB-15	09/12/91	CLR	_	N	

DUKE POWER COMPANY
QUALITY ASSURANCE DEPARTMENT
PRE-SERVICE AND IN-SERVICE INSPECTION SYSTEM
OCONEE 1 INSERVICE INSPECTION RESULTS OUTAGE 13

ITEM NUMBER	ID NUMBER	INSPECTION DATE	INSPECTION STATUS	INSPECTION LIMITED	GEO. REF.	COMMENTS
B06.010.001	1RPV-26-203-01	08/16/91	CLR	_	N	
B06.010.007	1RPV-26-203-07	08/16/91	CLR	_	N	
B06.010.008	1RPV-26-203-08	08/16/91	CLR	_	N	
B06.010.009	1RPV-26-203-09	08/16/91	CLR	_	N	
B06.010.010	1RPV-26-203-10	08/16/91	CLR	_	N	
B06.010.011	1RPV-26-203-11	08/16/91	CLR	_	N	
B06.010.012	1RPV-26-203-12	08/16/91	CLR	_	N	
B06.010.013	1RPV-26-203-13	08/16/91	CLR	_	N	
B06.010.014	1RPV-26-203-14	08/16/91	CLR	_	N	
B06.010.020	1RPV-26-203-20	08/22/91	CLR	_	N	
B06.010.021	1RPV-26-203-21	08/22/91	CLR	_	N	
B06.010.022	1RPV-26-203-22	08/22/91	CLR	_	N	
B06.010.028	1RPV-26-203-28	08/22/91	CLR	_	N	
B06.010.029	1RPV-26-203-29	08/22/91	CLR	_	N	
B06.010.030	1RPV-26-203-30	08/22/91	CLR	_	N	

ITEM NUMBER	ID NUMBER	INSPECTION DATE	INSPECTION STATUS	INSPECTION LIMITED	GEO. REF.	COMMENTS
B06.010.031	1RPV-26-208-61	08/20/91	CLR	_	N	
B06.010.032	1RPV-26-203-32	08/20/91	CLR	_	N	
B06.010.033	1RPV-26-203-33	08/20/91	CLR	_	N	
B06.010.034	1RPV-26-203-34	08/20/91	CLR	_	N	
B06.010.045	1RPV-26-203-45	08/20/91	CLR	_	N	
B06.010.046	1RPV-26-203-46	08/13/91	CLR	_	N	
B06.010.047	1RPV-26-203-47	08/13/91	CLR	_	N	
B06.010.048	1RPV-26-203-48	08/14/91	CLR	_	N	
B06.010.049	1RPV-26-203-49	08/14/91	CLR	_	N	
B06.010.050	1RPV-26-203-50	08/14/91	CLR	_	N	
B06.010.051	1RPV-26-203-51	08/14/91	CLR	_	N	
B06.010.052	1RPV-26-203-52	08/14/91	CLR	_	N	
B06.010.053	1RPV-26-203-53	08/14/91	CLR	_	N	
B06.010.054	1RPV-26-203-54	08/13/91	CLR	_	N	
B06.010.060	1RPV-26-208-63	08/14/91	CLR	_	N	

DUKE POWER COMPANY
QUALITY ASSURANCE DEPARTMENT
PRE-SERVICE AND IN-SERVICE INSPECTION SYSTEM
OCONEE 1 INSERVICE INSPECTION RESULTS OUTAGE 13

ITEM NUMBER	ID NUMBER	INSPECTION DATE	INSPECTION STATUS	INSPECTION LIMITED	GEO. REF.	COMMENTS
B06.030.001	1RPV-25-203-01	08/16/91	CLR	_	N	
B06.030.001A	1RPV-25-203-01	08/16/91	CLR	_	N	
B06.030.007	1RPV-25-203-07	08/16/91	CLR	_	N	
B06.030.007A	1RPV-25-203-07	08/16/91	CLR	_	N	
B06.030.008	1RPV-25-203-64	08/16/91	CLR	_	N	
B06.030.008A	1RPV-25-203-64	08/16/91	CLR	_	N	
B06.030.009	1RPV-25-203-09	08/16/91	CLR	_	N	
B06.030.009A	1RPV-25-203-09	08/16/91	CLR	_	N	
B06.030.010	1RPV-25-203-10	08/16/91	CLR	_	N	
B06.030.010A	1RPV-25-203-10	08/16/91	CLR	_	N	
B06.030.011	1RPV-25-203-11	08/16/91	CLR	_	N	
B06.030.011A	1RPV-25-203-11	08/16/91	CLR	_	N	
B06.030.012	1RPV-25-203-12	08/16/91	CLR	_	N	
B06.030.012A	1RPV-25-203-12	08/16/91	CLR	_	N	
B06.030.013	1RPV-25-203-13	08/16/91	CLR	_	N	

ITEM NUMBER	ID NUMBER	INSPECTION DATE	INSPECTION STATUS	INSPECTION LIMITED	GEO. REF.	COMMENTS
B06.030.013A	1RPV-25-203-13	08/16/91	CLR	_	N	
B06.030.014	1RPV-25-203-14	08/16/91	CLR	_	N	
B06.030.014A	1RPV-25-203-14	08/16/91	CLR	_	N	
B06.030.020	1RPV-25-203-20	08/22/91	CLR	_	N	
B06.030.020A	1RPV-25-203-20	08/22/91	CLR	_	N	
B06.030.021	1RPV-25-203-21	08/22/91	CLR	_	N	
B06.030.021A	1RPV-25-203-21	08/22/91	CLR	_	N	
B06.030.022	1RPV-25-203-22	08/22/91	CLR	_	N	
B06.030.022A	1RPV-25-203-22	08/22/91	CLR	_	N	
B06.030.028	1RPV-25-203-63	08/22/91	CLR	_	N	
B06.030.028A	1RPV-25-203-63	08/22/91	CLR	_	N	
B06.030.029	1RPV-25-203-29	08/22/91	CLR	_	N	
B06.030.029A	1RPV-25-203-29	08/22/91	CLR	_	N	
B06.030.030	1RPV-25-203-30	08/22/91	CLR	_	N	
B06.030.030A	1RPV-25-203-30	08/22/91	CLR	_	N	

DUKE POWER COMPANY
QUALITY ASSURANCE DEPARTMENT
PRE-SERVICE AND IN-SERVICE INSPECTION SYSTEM
OCONEE 1 INSERVICE INSPECTION RESULTS OUTAGE 13

ITEM NUMBER	ID NUMBER	INSPECTION DATE	INSPECTION STATUS	INSPECTION LIMITED	GEO. REF.	COMMENTS
B06.030.031	1RPV-25-209-61	08/20/91	CLR	_	N	
B06.030.031A	1RPV-25-209-61	08/20/91	CLR	_	N	
B06.030.032	1RPV-25-203-32	08/20/91	CLR	_	N	
B06.030.032A	1RPV-25-203-32	08/20/91	CLR	_	N	
B06.030.033	1RPV-25-203-33	08/20/91	CLR	_	N	
B06.030.033A	1RPV-25-203-33	08/20/91	CLR	_	N	
B06.030.034	1RPV-25-203-34	08/20/91	CLR	_	N	
B06.030.034A	1RPV-25-203-34	08/20/91	CLR	_	N	
B06.030.045	1RPV-25-203-45	08/20/91	CLR	_	N	
B06.030.045A	1RPV-25-203-45	08/20/91	CLR	_	N	
B06.030.046	1RPV-25-203-46	08/13/91	CLR	_	N	
B06.030.046A	1RPV-25-203-46	08/13/91	CLR	_	N	
B06.030.047	1RPV-25-203-47	08/13/91	CLR	_	N	
B06.030.047A	1RPV-25-203-47	08/13/91	CLR	_	N	
B06.030.048	1RPV-25-203-48	08/13/91	CLR	_	N	

ITEM NUMBER	ID NUMBER	INSPECTION DATE	INSPECTION STATUS	INSPECTION LIMITED	GEO. REF.	COMMENTS
B06.030.048A	1RPV-25-203-48	08/13/91	CLR	_	N	
B06.030.049	1RPV-25-203-49	08/13/91	CLR	_	N	
B06.030.049A	1RPV-25-203-49	08/13/91	CLR	_	N	
B06.030.050	1RPV-25-203-50	08/13/91	CLR	_	N	
B06.030.050A	1RPV-25-203-50	08/13/91	CLR	_	N	
B06.030.051	1RPV-25-203-51	08/13/91	CLR	_	N	
B06.030.051A	1RPV-25-203-51	08/13/91	CLR	_	N	
B06.030.052	1RPV-25-203-52	08/13/91	CLR	_	N	
B06.030.052A	1RPV-25-203-52	08/13/91	CLR	_	N	
B06.030.053	1RPV-25-203-53	08/13/91	CLR	_	N	
B06.030.053A	1RPV-25-203-53	08/13/91	CLR	_	N	
B06.030.054	1RPV-25-203-54	08/13/91	CLR	_	N	
B06.030.054A	1RPV-25-203-54	08/13/91	CLR	_	N	
B06.030.060	1RPV-25-209-69	08/13/91	CLR	_	N	
B06.030.060A	1RPV-25-209-69	08/13/91	CLR	_	N	

ITEM NUMBER	ID NUMBER	INSPECTION DATE	INSPECTION STATUS	INSPECTION LIMITED	GEO. REF.	COMMENTS
B06.050.001C	1RPV-WASH-BUSH	08/26/91	CLR	_	N	_____
B06.180.001	1RCP-1A1-F	08/13/91	CLR	_	N	_____
B06.180.002	1RCP-1A2-F	08/13/91	CLR	_	N	_____
B06.180.003	1RCP-1B1-F	08/13/91	CLR	_	N	_____
B06.180.004	1RCP-1B2-F	08/13/91	CLR	_	N	_____

DUKE POWER COMPANY
QUALITY ASSURANCE DEPARTMENT
PRE-SERVICE AND IN-SERVICE INSPECTION SYSTEM
OCONEE 1 INSERVICE INSPECTION RESULTS OUTAGE 13

ITEM NUMBER	ID NUMBER	INSPECTION DATE	INSPECTION STATUS	INSPECTION LIMITED	GEO. REF.	COMMENTS
B07.020.003	1PZR-LHB-STUDS	09/03/91	CLR	_	N	
B07.030.003	1SGB-UMW-BOLTS	08/10/91	CLR	_	N	
B07.030.004	1SGB-LMW-BOLTS	08/11/91	CLR	_	N	
B07.030.007	1SGB-UH-BOLTS	08/10/91	CLR	_	N	
B07.030.008	1SGB-LH-BOLTS	08/26/91	CLR	_	N	
B07.060.003	1RCP-1B1-S	08/27/91	CLR	_	N	
B07.060.004	1RCP-1B2-S	08/27/91	CLR	_	N	
B07.070.001	1-53A-CF11	08/23/91	REC	_	N	
B07.070.002	1-53A-CF12	08/23/91	CLR	_	N	
B07.070.003	1-53A-CF13	08/23/91	CLR	_	N	
B07.070.004	1-53A-CF14	08/23/91	CLR	_	N	
B07.070.006	1-53A-LP48	09/03/91	REC	_	N	
B07.080.001	1RPV CRD-BOLTS	08/27/91	CLR	_	N	CONN. #59 INSP. RFO 13
B07.080.002	1RPV CRD-RINGS	08/27/91	CLR	_	N	CONN # 59 INSP. RFO 13

ITEM NUMBER	ID NUMBER	INSPECTION DATE	INSPECTION STATUS	INSPECTION LIMITED	GEO. REF.	COMMENTS
B08.010.001	1RPV-HD-LUG-A	08/14/91	CLR	_	N	
B08.010.002	1RPV-HD-LUG-B	08/14/91	CLR	_	N	
B08.010.003	1RPV-HD-LUG-C	08/14/91	CLR	_	N	
B08.020.001	1PZR-WP82-X	09/01/91	CLR	L	N	
B08.020.002	1PZR-WP82-XY	09/01/91	CLR	L	N	INSP. RFO 13 PER IWB-2420(B)
B08.020.003	1PZR-WP82-Y	08/22/91	CLR	L	N	INSP. RFO 13 PER IWB-2420(B)
B08.020.004	1PZR-WP82-YZ	09/01/91	CLR	L	N	INSP. RFO 13 PER IWB-2420(B)
B08.020.007	1PZR-WP82-W	09/01/91	CLR	L	N	INSP. RFO 13 PER IWB-2420(B)
B08.020.008	1PZR-WP82-WX	08/22/91	CLR	L	N	

ITEM NUMBER	ID NUMBER	INSPECTION DATE	INSPECTION STATUS	INSPECTION LIMITED	GEO. REF.	COMMENTS
B09.011.003	1PIA1-6	09/01/91	CLR	_	N	ADDED PER IWB-2430(A)
B09.011.003A	1PIA1-6	09/01/91	CLR	_	N	ADDED PER IWB-2430(A)
B09.011.016	1PDA1-9	08/24/91	REC	_	N	
B09.011.019	1PIA2-6	09/01/91	CLR	_	N	ADDED PER IWB-2430(A)
B09.011.019A	1PIA2-6	09/01/91	CLR	_	N	ADDED PER IWB-2430(A)
B09.011.021	1PIA2-4	08/30/91	CLR	L	N	ADDED PER IWB-2430(A)
B09.011.021A	1PIA2-4	08/30/91	CLR	_	N	ADDED PER IWB-2430(A)
B09.011.022	1PIA2-3	08/30/91	CLR	L	N	ADDED PER IWB-2430(A)
B09.011.022A	1PIA2-3	08/30/91	CLR	_	N	ADDED PER IWB-2430(A)
B09.011.032	1PDA2-9	08/22/91	REC	_	N	
B09.011.035	1PIB1-6	09/01/91	CLR	_	N	ADDED PER IWB-2430(A)
B09.011.035A	1PIB1-6	09/01/91	CLR	_	N	ADDED PER IWB-2430(A)
B09.011.036	1PIB1-5	08/13/91	REP	L	N	PIR 1-091-0085
B09.011.036A	1PIB1-5	08/12/91	CLR	_	N	
B09.011.037	1PIB1-4	08/28/91	CLR	L	N	ADDED PER IWB-2430(A)

ITEM NUMBER	ID NUMBER	INSPECTION DATE	INSPECTION STATUS	INSPECTION LIMITED	GEO. REF.	COMMENTS
B09.011.037A	1PIB1-4	08/28/91	CLR	_	N	
B09.011.038	1PIB1-3	08/28/91	CLR	L	N	ADDED PER IWB-2430(A)
B09.011.038A	1PIB1-3	08/28/91	CLR	_	N	ADDED PER IWB-2430(A)
B09.011.040	1PIB1-1	08/24/91	CLR	L	N	
B09.011.040A	1PIB1-1	08/24/91	CLR	L	N	
B09.011.048	1PDB1-9	08/23/91	CLR	_	N	
B09.011.051	1PIB2-6	09/01/91	CLR	_	N	ADDED PER IWB-2430(A)
B09.011.051A	1PIB2-6	09/01/91	CLR	_	N	ADDED PER IWB-2430(A)
B09.011.052	1PIB2-5	08/30/91	CLR	L	N	ADDED PER IWB-2430(A)
B09.011.052A	1PIB2-5	08/30/91	CLR	_	N	ADDED PER IWB-2430(A)
B09.011.053	1PIB2-4	08/30/91	CLR	L	N	ADDED PER IWB-2430(A)
B09.011.053A	1PIB2-4	08/30/91	CLR	_	N	ADDED PER IWB-2430(A)
B09.011.054	1PIB2-3	08/30/91	CLR	L	N	ADDED PER IWB-2430(A)
B09.011.054A	1PIB2-3	08/30/91	CLR	_	N	ADDED PER IWB-2430(A)
B09.011.056	1PIB2-1	08/24/91	CLR	L	N	

PROGRAM: NISIRUND-QAISI04
FILE: C007133
PLANT: OCONEE UNIT 1
KEY: ITEM NUMBER B09

DUKE POWER COMPANY
QUALITY ASSURANCE DEPARTMENT
PRE-SERVICE AND IN-SERVICE INSPECTION SYSTEM
OCONEE 1 INSERVICE INSPECTION RESULTS OUTAGE 13

ITEM NUMBER	ID NUMBER	INSPECTION DATE	INSPECTION STATUS	INSPECTION LIMITED	GEO. REF.	COMMENTS
B09.011.056A	1PIB2-1	08/24/91	CLR	_	N	
B09.011.064	1PDB2-9	08/23/91	CLR	_	N	
B09.011.065	1PHA-1	08/22/91	CLR	_	N	
B09.011.076	1PHA-12	08/12/91	CLR	_	N	
B09.011.076A	1PHA-12	08/12/91	CLR	_	N	
B09.011.077	1PHB-1	08/23/91	CLR	_	N	
B09.011.088	1PHB-12	08/13/91	CLR	_	N	
B09.011.088A	1PHB-12	08/13/91	CLR	_	N	
B09.011.090	1-53A-2.3-43L	08/26/91	CLR	_	N	
B09.011.100	1-53A-1.2-1L	08/26/91	CLR	_	N	
B09.011.111	1-53A-3-8A	09/03/91	CLR	L	Y	
B09.011.111A	1-53A-3-8A	09/04/91	CLR	_	N	
B09.012.025	1PIB1-62LI	08/25/91	CLR	_	N	
B09.012.025A	1PIB1-62LI	08/25/91	CLR	_	N	
B09.012.026	1PIB1-62LO	08/25/91	CLR	_	N	

DUKE POWER COMPANY
QUALITY ASSURANCE DEPARTMENT
PRE-SERVICE AND IN-SERVICE INSPECTION SYSTEM
OCONEE 1 INSERVICE INSPECTION RESULTS OUTAGE 13

ITEM NUMBER	ID NUMBER	INSPECTION DATE	INSPECTION STATUS	INSPECTION LIMITED	GEO. REF.	COMMENTS
B09.012.026A	1PIB1-62LO	08/25/91	CLR	_	N	
B09.012.029	1PDB1-212LO	08/25/91	CLR	_	N	
B09.012.029A	1PDB1-212LO	08/25/91	CLR	_	N	
B09.012.030	1PDB1-212LI	08/25/91	CLR	_	N	
B09.012.030A	1PDB1-212LI	08/25/91	CLR	_	N	
B09.021.003	1PSP-11	08/06/91	CLR	_	N	
B09.021.004	1PSP-12	08/06/91	CLR	_	N	
B09.021.009	1-51A-11-88	08/06/91	CLR	_	N	
B09.021.025	1-50-01-31	08/07/91	CLR	_	N	
B09.021.026	1-50-1.1-25	08/06/91	CLR	_	N	
B09.021.027	1-50-1.1-29	08/06/91	CLR	_	N	
B09.021.028	1-50-1.1-30	08/06/91	CLR	_	N	
B09.021.030	1-50-1.2-3	08/06/91	CLR	_	N	
B09.021.031	1-50-1.2-5	08/06/91	CLR	_	N	
B09.021.037	1-51A-04-44C	08/06/91	CLR	_	N	

ITEM NUMBER	ID NUMBER	INSPECTION DATE	INSPECTION STATUS	INSPECTION LIMITED	GEO. REF.	COMMENTS
B09.021.038	1-51A-04-41C	08/07/91	CLR	_	N	
B09.021.039	1-51A-04-39C	08/05/91	CLR	_	N	
B09.021.040	1-51A-04-35C	08/05/91	CLR	_	N	
B09.021.041	1-51A-04-32C	08/05/91	CLR	_	N	
B09.021.042	1-51A-04-30C	08/05/91	CLR	_	N	
B09.021.060	1-51A-11.3-85A	08/06/91	CLR	_	N	
B09.021.061	1-51A-11.3-85B	08/06/91	CLR	_	N	
B09.032.017	1PIB2-10	09/02/91	CLR	_	N	
B09.032.022	1PDB2-10	08/06/91	CLR	_	N	

ITEM NUMBER	ID NUMBER	INSPECTION DATE	INSPECTION STATUS	INSPECTION LIMITED	GEO. REF.	COMMENTS
B10.010.003	1-53A-H1A	09/04/91	CLR	_	N	

ITEM NUMBER	ID NUMBER	INSPECTION DATE	INSPECTION STATUS	INSPECTION LIMITED	GEO. REF.	COMMENTS
B13.010.001	1RPV-INT SUR	08/28/91	CLR	_	N	_____
B13.030.001	1RPV-INTERNALS	08/28/91	REC	_	N	_____

ITEM NUMBER	ID NUMBER	INSPECTION DATE	INSPECTION STATUS	INSPECTION LIMITED	GEO. REF.	COMMENTS
B14.010.003	1RPV-CRD-59WH9	08/27/91	CLR	_	N	
B14.010.006	1RPV-CRD-59W60	08/27/91	CLR	_	N	
B14.010.009	1RPV-CRD-59	08/27/91	CLR	_	N	
B14.010.012	1RPV-CRD-59W61	08/27/91	CLR	_	N	

ITEM NUMBER	ID NUMBER	INSPECTION DATE	INSPECTION STATUS	INSPECTION LIMITED	GEO. REF.	COMMENTS
B15.010.001	1RPV-LK TEST	09/26/91	CLR	_	N	
B15.020.001	1PZR-LK TEST	09/26/91	CLR	_	N	
B15.030.001	1SGA-LK TEST	09/26/91	CLR	_	N	
B15.030.002	1SGB-LK TEST	09/26/91	CLR	_	N	
B15.040.001	1LDC1A-LK TEST	09/26/91	CLR	_	N	
B15.040.002	1LDC1B-LK TEST	09/26/91	CLR	_	N	
B15.050.001	1-OFD-100A-1.1	09/26/91	CLR	_	N	
B15.050.001A	1-OFD-100A-1.2	09/26/91	CLR	_	N	
B15.050.002	1-OFD-101A-1.1	09/26/91	CLR	_	N	
B15.050.003	1-OFD-101A-1.4	09/26/91	CLR	_	N	
B15.050.004	1-OFD-102A-1.1	09/26/91	CLR	_	N	
B15.050.005	1-OFD-102A-1.2	09/26/91	CLR	_	N	
B15.050.006	1-OFD-102A-1.3	09/26/91	CLR	_	N	
B15.050.007	1-OFD-110A-1.1	09/26/91	CLR	_	N	
B15.050.009	1-OFD-110A-1.4	09/26/91	CLR	_	N	

ITEM NUMBER	ID NUMBER	INSPECTION DATE	INSPECTION STATUS	INSPECTION LIMITED	GEO. REF.	COMMENTS
B15.060.001	1-RCP-1A1	09/26/91	REC	_	N	
B15.060.002	1-RCP-1A2	09/26/91	CLR	_	N	
B15.060.003	1-RCP-1B1	09/26/91	CLR	_	N	
B15.060.004	1-RCP-1B2	09/26/91	CLR	_	N	

DUKE POWER COMPANY
QUALITY ASSURANCE DEPARTMENT
PRE-SERVICE AND IN-SERVICE INSPECTION SYSTEM
OCONEE 1 INSERVICE INSPECTION RESULTS OUTAGE 13

ITEM NUMBER	ID NUMBER	INSPECTION DATE	INSPECTION STATUS	INSPECTION LIMITED	GEO. REF.	COMMENTS
B16.011.001	1SGA-TUBES	08/26/91	REP	_	N	_____
B16.011.002	1SGB-TUBES	08/31/91	REP	_	N	_____

DUKE POWER COMPANY
QUALITY ASSURANCE DEPARTMENT
PRE-SERVICE AND IN-SERVICE INSPECTION SYSTEM
OCONEE 1 INSERVICE INSPECTION RESULTS OUTAGE 13

ITEM NUMBER	ID NUMBER	INSPECTION DATE	INSPECTION STATUS	INSPECTION LIMITED	GEO. REF.	COMMENTS
C01.030.004	1SGB-WG59	08/12/91	REC	L	N	ACCEPTABLE PER IWB-3511-1

ITEM NUMBER	ID NUMBER	INSPECTION DATE	INSPECTION STATUS	INSPECTION LIMITED	GEO. REF.	COMMENTS
C02.021.001	1SGA-WG23-1	08/20/91	REC	_	Y	
C02.021.001A	1SGA-WG23-1	08/16/91	REP	_	N	PIR 1-091-0089 & 4-091-0093
C02.021.002A	1SGA-WG23-2	09/06/91	CLR	_	N	ADDED PER IWC-2430(A)
C02.021.006	1-CFTB-OUTLET	08/09/91	CLR	_	N	
C02.021.006A	1-CFTB-OUTLET	08/15/91	CLR	_	N	
C02.022.001	1SGA-WG23-1	08/20/91	CLR	L	N	
C02.022.006	1-CFTB-OUTLET	08/09/91	CLR	L	N	

DUKE POWER COMPANY
QUALITY ASSURANCE DEPARTMENT
PRE-SERVICE AND IN-SERVICE INSPECTION SYSTEM
OCONEE 1 INSERVICE INSPECTION RESULTS OUTAGE 13

ITEM NUMBER	ID NUMBER	INSPECTION DATE	INSPECTION STATUS	INSPECTION LIMITED	GEO. REF.	COMMENTS
C03.010.007	1SGA-WG84-WX	08/15/91	CLR	_	N	
C03.010.008	1SGA-WG84-XW	08/13/91	CLR	_	N	
C03.010.017	1-CFTA-WT18-X	08/11/91	CLR	_	N	
C03.010.019	1-CFTA-WT18-Y	08/11/91	CLR	_	N	
C03.040.001	1-01A-H14	08/13/91	CLR	_	N	
C03.040.002	1-01A-H13	08/24/91	CLR	_	N	
C03.040.006	1-01A-H22	08/24/91	CLR	_	N	
C03.040.023	1-JWC-1702	08/15/91	CLR	_	N	
C03.040.024	1-JWC-1701	08/13/91	CLR	_	N	
C03.040.054	1-53B-R22	07/22/91	CLR	_	N	
C03.040.057	1-53B-DE061	09/18/91	CLR	_	N	
C03.040.058	1-53B-R16	07/23/91	CLR	_	N	
C03.040.064	1-54A-R15	09/10/91	CLR	_	N	
C03.040.066	1-54A-R3	08/24/91	CLR	_	N	
C03.040.071	1-55-SR12	06/26/91	CLR	_	N	

ITEM NUMBER	ID NUMBER	INSPECTION DATE	INSPECTION STATUS	INSPECTION LIMITED	GEO. REF.	COMMENTS
C05.011.050	1-53B-6.2-28K	06/27/91	CLR	_	N	
C05.011.051	1-53B-6.1-26K	07/23/91	CLR	_	N	
C05.011.052	1-53B-6.1-23KC	08/06/91	CLR	_	N	
C05.011.053	1-53B-6.1-21KD	07/23/91	CLR	_	N	
C05.011.054	1-53B-6.1-21KM	07/23/91	CLR	_	N	
C05.011.057	1-53B-3.2-16E	07/18/91	CLR	_	N	
C05.011.058	1-53B-3.2-9E	07/24/91	CLR	_	N	
C05.011.081A	1-53B-1.1-B29	07/22/91	CLR	_	N	
C05.011.089	1-53B-10-86BR	07/23/91	CLR	_	N	
C05.011.092	1-53B-10-B78	07/24/91	CLR	_	N	
C05.011.094	1-53B-10-B59	06/26/91	CLR	_	N	
C05.011.096	1-53B-1.4-B56	07/24/91	CLR	_	N	
C05.011.103	1-53B-6.1-21KI	07/23/91	CLR	_	N	
C05.011.104	1-53B-1.5-98B	07/18/91	CLR	_	N	
C05.011.106	1-53B-1.5-89B	07/18/91	CLR	_	N	

ITEM NUMBER	ID NUMBER	INSPECTION DATE	INSPECTION STATUS	INSPECTION LIMITED	GEO. REF.	COMMENTS
C05.011.108	1-53B-1.5-105B	07/24/91	CLR	_	N	
C05.011.204	1-54A-1.3-13C	07/18/91	CLR	_	N	
C05.011.210	1-54A-3.1-16C	07/24/91	CLR	_	N	
C05.011.214	1-54A-4.1-30C	06/27/91	CLR	_	N	
C05.011.218	1-54A-4.2-47C	08/19/91	CLR	_	N	
C05.011.226	1-54A-3.2-7B	08/06/91	CLR	_	N	
C05.011.227	1-54A-3.2-12B	07/31/91	CLR	_	N	
C05.011.232	1-54A-4.4-27B	07/22/91	CLR	_	N	
C05.011.233	1-54A-4.2-65C	08/19/91	CLR	_	N	
C05.011.300	1-03A-4.1-45	08/24/91	CLR	_	N	
C05.011.301	1-03A-4.1-79	08/24/91	CLR	_	N	
C05.012.027	1-53B-10-86BRL	07/23/91	CLR	_	N	
C05.012.028	1-53B-1.5-98BL	07/18/91	CLR	_	N	
C05.012.029	1-53B-1.5-89BL	07/18/91	CLR	_	N	
C05.012.030	1-53B-6.1-23KCL	08/06/91	CLR	_	N	

DUKE POWER COMPANY
QUALITY ASSURANCE DEPARTMENT
PRE-SERVICE AND IN-SERVICE INSPECTION SYSTEM
OCONEE 1 INSERVICE INSPECTION RESULTS OUTAGE 13

ITEM NUMBER	ID NUMBER	INSPECTION DATE	INSPECTION STATUS	INSPECTION LIMITED	GEO. REF.	COMMENTS
C05.012.031	1-54A-4.2-65CLI	08/19/91	CLR	_	N	
C05.012.031A	1-54A-4.2-65CLO	08/19/91	CLR	_	N	
C05.021.027	1-01A-MS8A-A	08/27/91	CLR	_	N	
C05.021.027A	1-01A-MS8A-A	08/13/91	CLR	_	N	
C05.021.030	1-1MS47-7	08/18/91	CLR	_	N	
C05.021.030A	1-MS47-7	08/15/91	CLR	_	N	
C05.021.032	1-01A-MS13A-B	08/21/91	CLR	_	N	
C05.021.032A	1-01A-MS13A-B	08/20/91	CLR	_	N	
C05.021.038	1-01A-1.4-85	08/28/91	CLR	_	N	
C05.021.038A	1-01A-1.4-85	08/27/91	CLR	_	N	
C05.021.048	1-01A-1.1-30E	08/21/91	CLR	_	N	
C05.021.048A	1-01A-1.1-30E	08/16/91	CLR	_	N	
C05.021.100	1-03-FWD64-B	08/28/91	CLR	_	N	
C05.021.100A	1-03-FWD64-B	08/23/91	CLR	_	N	
C05.021.103	1-03-3-28B	08/26/91	CLR	_	N	

ITEM NUMBER	ID NUMBER	INSPECTION DATE	INSPECTION STATUS	INSPECTION LIMITED	GEO. REF.	COMMENTS
C05.021.103A	1-03-3-28B	08/12/91	REP	_	N	PIR 1-091-0079
C05.021.105A	1-03-9-WG91A	08/15/91	CLR	_	N	ADDED PER IWC-2430(A)
C05.021.106	1-03-9-WG91D	08/30/91	CLR	_	N	
C05.021.106A	1-03-9-WG91D	08/26/91	CLR	_	N	
C05.021.107A	1-03-9-WG91E	09/01/91	CLR	_	N	ADDED PER IWC-2430(A)
C05.021.108A	1-03-9-WG91G	09/09/91	CLR	_	N	ADDED PER IWC-2430(A)
C05.021.109A	1-03-3-26C	09/02/91	CLR	_	N	ADDED PER IWC-2430(A)
C05.021.114	1-03-FWD87-A	08/21/91	CLR	_	N	
C05.021.114A	1-03-FWD87-A	08/07/91	CLR	_	N	
C05.021.115A	1-03-10-WG91B	09/09/91	CLR	_	N	ADDED PER IWC-2430(A)
C05.021.116	1-03-03-44B	08/21/91	CLR	_	N	
C05.021.116A	1-03-03-44B	08/12/91	CLR	_	N	
C05.022.010	1-01A-MS8A-A-L	08/22/91	CLR	_	N	
C05.022.010A	1-01A-MS8A-A-L	08/13/91	CLR	_	N	
C05.022.011	1-01A-MS13A-BL	08/21/91	CLR	_	N	

ITEM NUMBER	ID NUMBER	INSPECTION DATE	INSPECTION STATUS	INSPECTION LIMITED	GEO. REF.	COMMENTS
C05.022.011A	1-01A-MS13A-BL	08/20/91	CLR	_	N	
C05.022.012	1-01A-MS13A-BL1	08/21/91	CLR	_	N	
C05.022.012A	1-01A-MS13A-BL1	08/20/91	CLR	_	N	
C05.031.007	1-53B-6.1-21KA	07/23/91	CLR	_	N	
C05.031.009	1-53B-06-26KI	06/27/91	CLR	_	N	

ITEM NUMBER	ID NUMBER	INSPECTION DATE	INSPECTION STATUS	INSPECTION LIMITED	GEO. REF.	COMMENTS
C07.021.003	1-OFD-101A-1.1	09/06/91	CLR	_	N	
C07.021.005	1-OFD-101A-1.3	08/28/91	CLR	_	N	PARTIAL
C07.021.006	1-OFD-101A-1.4	08/28/91	REC	_	N	PARTIAL
C07.021.007	1-OFD-101A-1.5	09/04/91	CLR	_	N	PARTIAL
C07.021.008	1-OFD-102A-1.1	04/30/91	REC	_	N	PARTIAL
C07.021.011	1-OFD-103A-1.1	04/30/91	CLR	_	N	
C07.021.012	1-OFD-104A-1.1	09/04/91	CLR	_	N	PARTIAL
C07.021.014	1-OFD-106E-1.1	08/06/91	CLR	_	N	PARTIAL
C07.021.015	1-OFD-107A-1.1	08/14/91	CLR	_	N	PARTIAL
C07.021.017	1-OFD-107B-1.1	08/02/91	CLR	_	N	PARTIAL
C07.021.025	1-OFD-121D-1.1	09/10/91	CLR	_	N	PARTIAL
C07.021.031	1-OFD-124B-1.2	08/31/91	REC	_	N	PARTIAL
C07.021.032	1-OFD-124B-1.4	09/08/91	REC	_	N	
C07.021.036	1-OFD-144A-1.2	09/07/91	CLR	_	N	
C07.021.037	1-OFD-144A-1.3	08/30/91	CLR	_	N	

DUKE POWER COMPANY
QUALITY ASSURANCE DEPARTMENT
PRE-SERVICE AND IN-SERVICE INSPECTION SYSTEM
OCONEE 1 INSERVICE INSPECTION RESULTS OUTAGE 13

ITEM NUMBER	ID NUMBER	INSPECTION DATE	INSPECTION STATUS	INSPECTION LIMITED	GEO. REF.	COMMENTS
C07.021.040	1-OFD-124B-1.3	08/31/91	REC	_	N	
C07.031.007	1RBS PUMP-1A	04/25/91	REC	_	N	
C07.031.008	1RBS PUMP 1B	04/30/91	CLR	_	N	
C07.031.009	1SSF-1P-1	09/04/91	CLR	_	N	

DUKE POWER COMPANY
QUALITY ASSURANCE DEPARTMENT
PRE-SERVICE AND IN-SERVICE INSPECTION SYSTEM
OCONEE 1 INSERVICE INSPECTION RESULTS OUTAGE 13

ITEM NUMBER	ID NUMBER	INSPECTION DATE	INSPECTION STATUS	INSPECTION LIMITED	GEO. REF.	COMMENTS
D01.011.002	1-OFD-101A-1.1	01/24/91	CLR	_	N	
D01.011.017	1-OFD-110A-1.4	01/24/91	CLR	_	N	
D01.012.002	1-OFD-101A-1.1	09/03/91	CLR	_	N	PARTIAL
D01.012.003	1-OFD-101A-1.2	09/03/91	CLR	_	N	PARTIAL
D01.012.004	1-OFD-101A-1.3	09/03/91	CLR	_	N	
D01.012.005	1-OFD-101A-1.4	09/04/91	REC	_	N	PARTIAL
D01.012.006	1-OFD-101A-1.5	09/04/91	CLR	_	N	
D01.012.008	1-OFD-109A-1.1	09/03/91	CLR	_	N	PARTIAL
D01.012.009	1-OFD-110A-1.1	09/03/91	CLR	_	N	PARTIAL
D01.012.012	1-OFD-144A-1.2	09/07/91	CLR	_	N	
D01.012.013	1-OFD-102A-1.2	09/03/91	CLR	_	N	

ITEM NUMBER	ID NUMBER	INSPECTION DATE	INSPECTION STATUS	INSPECTION LIMITED	GEO. REF.	COMMENTS
D02.011.010	1-OFD-121D-1.2	01/22/91	CLR	_	N	
D02.012.004	1-OFD-121A-1.8	09/07/91	CLR	_	N	PARTIAL
D02.012.005	1-OFD-121B-1.3	09/10/91	REC	_	N	PARTIAL
D02.012.006	1-OFD-121B-1.5	09/10/91	CLR	_	N	PARTIAL
D02.012.009	1-OFD-121D-1.1	09/10/91	REC	_	N	PARTIAL
D02.012.011	1-OFD-121D-2.1	09/10/91	CLR	_	N	
D02.012.012	1-OFD-121D-3.1	09/10/91	CLR	_	N	
D02.012.013	1-OFD-122A-1.4	09/03/91	REC	_	N	PARTIAL
D02.012.021	1-OFD-133A-2.5	09/10/91	CLR	_	N	PARTIAL
D02.012.036	1-OFD-124B-1.2	08/31/91	CLR	_	N	PARTIAL
D02.020.001	1-01A-DE008	08/23/91	CLR	_	N	
D02.020.004	1-01A-H4	08/23/91	CLR	_	N	
D02.020.012	1-03A-SR30	08/18/91	CLR	_	N	
D02.020.013	1-03A-SR84	08/10/91	CLR	_	N	
D02.020.026	1-03A-SR96	08/26/91	CLR	_	N	

DUKE POWER COMPANY
QUALITY ASSURANCE DEPARTMENT
PRE-SERVICE AND IN-SERVICE INSPECTION SYSTEM
OCONEE 1 INSERVICE INSPECTION RESULTS OUTAGE 13

ITEM NUMBER	ID NUMBER	INSPECTION DATE	INSPECTION STATUS	INSPECTION LIMITED	GEO. REF.	COMMENTS
D02.020.027	1-03A-H54	07/17/91	CLR	_	N	
D02.020.028	1-03A-H55	08/25/91	CLR	_	N	
D02.020.029	1-03A-H59	08/21/91	CLR	_	N	
D02.020.038	1-03A-H49	07/15/91	CLR	_	N	
D02.020.040	1-03A-SR61	08/25/91	CLR	_	N	
D02.020.046	1-03A-SR96	07/31/91	CLR	_	N	
D02.020.059	1-03A-H146	08/13/91	CLR	_	N	
D02.020.060	1-03A-SR19	08/05/91	CLR	_	N	
D02.020.085	1-03A-SR48	08/26/91	CLR	_	N	
D02.020.086	1-03A-SR49	09/04/91	CLR	_	N	
D02.020.092	1-03A-H53	08/10/91	CLR	_	N	
D02.020.094	1-03A-DE062	08/10/91	CLR	_	N	
D02.020.095	1-03A-SR85	07/17/91	CLR	_	N	
D02.020.097	1-03A-H38	08/23/91	CLR	_	N	
D02.030.015	1-03A-SR53	08/23/91	CLR	_	N	

DUKE POWER COMPANY
QUALITY ASSURANCE DEPARTMENT
PRE-SERVICE AND IN-SERVICE INSPECTION SYSTEM
OCONEE 1 INSERVICE INSPECTION RESULTS OUTAGE 13

ITEM NUMBER	ID NUMBER	INSPECTION DATE	INSPECTION STATUS	INSPECTION LIMITED	GEO. REF.	COMMENTS
D02.040.001	1-03-H58	07/15/91	CLR	_	N	
D02.040.002	1-03-H59	08/06/91	CLR	_	N	
D02.060.010	1-03-R12	08/06/91	CLR	_	N	

ITEM NUMBER	ID NUMBER	INSPECTION DATE	INSPECTION STATUS	INSPECTION LIMITED	GEO. REF.	COMMENTS
D03.012.001	1-OFD-104A-1.1	05/15/91	REC	_	N	PARTIAL
D03.012.002	1-OFD-104A-1.2	05/15/91	REC	_	N	PARTIAL

DUKE POWER COMPANY
QUALITY ASSURANCE DEPARTMENT
PRE-SERVICE AND IN-SERVICE INSPECTION SYSTEM
OCONEE 1 INSERVICE INSPECTION RESULTS OUTAGE 13

ITEM NUMBER	ID NUMBER	INSPECTION DATE	INSPECTION STATUS	INSPECTION LIMITED	GEO. REF.	COMMENTS
E01.001.002	1RCP-1A2	09/13/91	CLR	L	N	
E01.001.003	1RCP-1B1	09/14/91	CLR	L	N	
E01.001.004	1RCP-1B2	09/13/91	CLR	L	N	

DUKE POWER COMPANY
QUALITY ASSURANCE DEPARTMENT
PRE-SERVICE AND IN-SERVICE INSPECTION SYSTEM
OCONEE 1 INSERVICE INSPECTION RESULTS OUTAGE 13

ITEM NUMBER	ID NUMBER	INSPECTION DATE	INSPECTION STATUS	INSPECTION LIMITED	GEO. REF.	COMMENTS
E03.001.001	1-50-47-3	08/24/91	CLR	-	N	
E03.001.002	1-50-47-4	08/24/91	CLR	-	N	

DUKE POWER COMPANY
QUALITY ASSURANCE DEPARTMENT
PRE-SERVICE AND IN-SERVICE INSPECTION SYSTEM
OCONEE 1 INSERVICE INSPECTION RESULTS OUTAGE 13

ITEM NUMBER	ID NUMBER	INSPECTION DATE	INSPECTION STATUS	INSPECTION LIMITED	GEO. REF.	COMMENTS
E07.001.001	1-51A-11-87	08/21/91	CLR	L	N	
E07.001.002	1-51A-11-88	08/21/91	CLR	L	N	
E07.001.003	1-51A-11-89	08/21/91	CLR	L	Y	
E07.001.004	1-51A-11-90	08/21/91	CLR	L	N	
E07.001.007	1-51A-10-1	08/21/91	CLR	L	N	
E07.001.008	1-51A-10-2	08/21/91	CLR	_	N	
E07.001.009	1-51A-10-6	08/21/91	CLR	_	N	
E07.001.010	1-51A-5-81C	08/21/91	CLR	L	N	
E07.001.011	1-51A-5-79C	08/21/91	CLR	_	N	
E07.001.012	1-51A-5-77C	08/21/91	CLR	_	N	

ITEM NUMBER	ID NUMBER	INSPECTION DATE	INSPECTION STATUS	INSPECTION LIMITED	GEO. REF.	COMMENTS
E09.001.001	1-03A-11-157D	08/12/91	CLR	_	N	
E09.001.002	1-03A-11-2VEN	08/12/91	CLR	_	N	
E09.001.003	1-03A-11-156D	08/12/91	CLR	_	N	
E09.001.004	1-03A-11-3VEN	08/12/91	CLR	_	N	
E09.001.005	1-03A-11-155D	08/12/91	CLR	_	N	
E09.001.006	1-03A-11-4VEN	08/12/91	CLR	_	N	
E09.001.007	1-03A-11-154D	08/12/91	CLR	_	N	
E09.001.008	1-03A-11-5VEN	08/12/91	CLR	_	N	
E09.001.009	1-03A-11-153D	08/12/91	CLR	_	N	
E09.001.010	1-3A-11-6VEN	08/12/91	CLR	_	N	
E09.001.011	1-03A-11-152D	08/12/91	CLR	_	N	
E09.001.012	1-03A-11-7VEN	08/12/91	CLR	_	N	
E09.001.013	1-03A-11-151D	08/12/91	CLR	_	N	
E09.001.014	1-03A-11-8VEN	08/12/91	CLR	_	N	

DUKE POWER COMPANY
QUALITY ASSURANCE DEPARTMENT
PRE-SERVICE AND IN-SERVICE INSPECTION SYSTEM
OCONEE 1 INSERVICE INSPECTION RESULTS OUTAGE 13

ITEM NUMBER	ID NUMBER	INSPECTION DATE	INSPECTION STATUS	INSPECTION LIMITED	GEO. REF.	COMMENTS
F1.01.060	1-51A-H2B	08/06/91	CLR	_	N	
F1.01.061	1-51A-H1B	08/06/91	REC	_	N	
F1.01.063	1-51A-H16B	08/08/91	REC	_	N	
F1.01.066	1-51A-H13B	08/06/91	REC	_	N	
F1.01.067	1-51A-H6238	08/08/91	REC	_	N	
F1.01.069	1-51A-H8C	09/04/91	REC	_	N	
F1.01.091	1-51A-H16A	08/06/91	CLR	_	N	
F1.01.092	1-51A-H10A	08/06/91	REC	_	N	
F1.01.093	1-51A-H12B	08/08/91	REC	_	N	
F1.01.151	1-53A-H5A	08/23/91	REC	_	N	
F1.01.152	1-53A-H6A	08/23/91	CLR	_	N	
F1.01.153	1-53A-H7A	08/06/91	REC	_	N	
F1.01.200	1-53A-H3A	08/08/91	REC	_	N	
F1.01.201	1-53A-H2A	08/08/91	REC	_	N	
F1.01.203	1-53A-2701	08/08/91	REC	_	N	

DUKE POWER COMPANY
QUALITY ASSURANCE DEPARTMENT
PRE-SERVICE AND IN-SERVICE INSPECTION SYSTEM
OCONEE 1 INSERVICE INSPECTION RESULTS OUTAGE 13

ITEM NUMBER	ID NUMBER	INSPECTION DATE	INSPECTION STATUS	INSPECTION LIMITED	GEO. REF.	COMMENTS
F1.01.225	1SGB-SKIRT	08/30/91	CLR	_	N	
F1.02.041	1-01A-H6B	08/21/91	CLR	_	N	
F1.02.048	1-01A-H13	08/19/91	REC	_	N	
F1.02.049	1-01A-H14	08/10/91	REC	_	N	
F1.02.050	1-01A-H15	08/16/91	REC	_	N	
F1.02.051	1-01A-R8	08/18/91	CLR	_	N	
F1.02.057	1-01A-DE005	08/29/91	CLR	_	N	
F1.02.058	1-01A-H17	08/29/91	CLR	_	N	
F1.02.059	1-01A-H18	09/03/91	CLR	_	N	
F1.02.066	1-01A-R12	09/12/91	REC	_	N	
F1.02.067	1-01A-H23	08/11/91	CLR	_	N	
F1.02.068	1-01A-H22	08/18/91	REC	_	N	
F1.02.073	1-01A-H40	07/09/91	CLR	_	N	
F1.02.074	1-01A-H1	07/17/91	CLR	_	N	
F1.02.075	1-01A-H14	08/11/91	REC	_	N	

DUKE POWER COMPANY
QUALITY ASSURANCE DEPARTMENT
PRE-SERVICE AND IN-SERVICE INSPECTION SYSTEM
OCONEE 1 INSERVICE INSPECTION RESULTS OUTAGE 13

ITEM NUMBER	ID NUMBER	INSPECTION DATE	INSPECTION STATUS	INSPECTION LIMITED	GEO. REF.	COMMENTS
F1.02.104	1-03-H9A	08/06/91	CLR	_	N	
F1.02.105	1-03-H1A	08/06/91	CLR	_	N	
F1.02.126	1-03-H11B	08/06/91	REC	_	N	
F1.02.311	1-53B-H33	08/26/91	CLR	_	N	
F1.02.312	1-53B-R15	07/17/91	CLR	_	N	
F1.02.314	1-53B-R14	07/17/91	CLR	_	N	
F1.02.334	1-53B-R16	07/31/91	CLR	_	N	
F1.02.350	1-53B-R22	07/31/91	CLR	_	N	
F1.02.351	1-53B-H8	09/02/91	CLR	_	N	
F1.02.352	1-53B-H64	08/25/91	REC	_	N	
F1.02.356	1-53B-R25	08/01/91	CLR	_	N	
F1.02.358	1-53B-R24	08/01/91	REC	_	N	
F1.02.360	1-53B-DE056	07/15/91	CLR	_	N	
F1.02.361	1-53B-DE044	08/01/91	CLR	_	N	
F1.02.363	1-53B-H4	07/15/91	REC	_	N	

ITEM NUMBER	ID NUMBER	INSPECTION DATE	INSPECTION STATUS	INSPECTION LIMITED	GEO. REF.	COMMENTS
F1.02.377	1-53B-H28	08/01/91	CLR	_	N	
F1.02.378	1-53B-DE064	07/15/91	CLR	_	N	
F1.02.379	1-53B-H29	08/01/91	CLR	_	N	
F1.02.381	1-53B-DE061	08/01/91	REC	_	N	
F1.02.397	1-53B-H62	06/25/91	CLR	_	N	
F1.02.398	1-53B-H63	06/25/91	CLR	_	N	
F1.02.400	1-53B-H30	06/25/91	REC	_	N	
F1.02.402	1-53B-2601	08/01/91	CLR	_	N	
F1.02.451	1-54A-DE04	09/09/91	REC	_	N	ADDED PER IWF-2430(A)
F1.02.462	1-54A-435B-H32	09/06/91	CLR	_	N	ADDED PER IWF-2430(A)
F1.02.464	1-54A435B-DE11	09/06/91	CLR	_	N	ADDED PER IWF-2430(A)
F1.02.467	1-54A-R8	09/06/91	CLR	_	N	ADDED PER IWF-2430(A)
F1.02.470	1-54A-436D-H3	09/12/91	CLR	_	N	ADDED PER IWF-2430(A)
F1.02.474	1-54A-437A-R7	09/09/91	CLR	_	N	ADDED PER IWF-2430(A)
F1.02.476	1-54A-R22	08/25/91	CLR	_	N	

ITEM NUMBER	ID NUMBER	INSPECTION DATE	INSPECTION STATUS	INSPECTION LIMITED	GEO. REF.	COMMENTS
F1.02.477	1-54A-435B-H23	09/06/91	REC	_	N	ADDED PER IWF-2430(A)
F1.02.478	1-54A-DE10	08/19/91	REP	_	N	PIR 1-091-0083
F1.02.479	1-54A-R3	08/16/91	CLR	_	N	
F1.02.480	1-54A-DE06	08/16/91	CLR	_	N	
F1.02.481	1-54A-DE020	06/25/91	CLR	_	N	
F1.02.482	1-54A-435B-R2	09/12/91	REC	_	N	ADDED PER IWF-2430(A)
F1.02.483	1-54A435B-DE05	09/06/91	CLR	_	N	ADDED PER IWF-2430(A)
F1.02.484	1-54A435B-DE02	09/09/91	REC	_	N	ADDED PER IWF-2430(A)
F1.02.490	1-54A-H24	09/03/91	CLR	_	N	ADDED PER IWF-2430(A)
F1.02.491	1-54A-H23	09/02/91	CLR	_	N	ADDED PER IWF-2430(A)
F1.02.492	1-54A-H21	09/02/91	CLR	_	N	ADDED PER IWF-2430(A)
F1.02.496	1-54A-R15	09/03/91	CLR	_	N	
F1.02.497	1-54A-R13	06/25/91	CLR	_	N	
F1.02.504	1-54A-H6	07/17/91	CLR	_	N	
F1.02.505	1-54A-H7	07/17/91	CLR	_	N	

DUKE POWER COMPANY
QUALITY ASSURANCE DEPARTMENT
PRE-SERVICE AND IN-SERVICE INSPECTION SYSTEM
OCONEE 1 INSERVICE INSPECTION RESULTS OUTAGE 13

ITEM NUMBER	ID NUMBER	INSPECTION DATE	INSPECTION STATUS	INSPECTION LIMITED	GEO. REF.	COMMENTS
F1.02.511	1-54A-H11	09/07/91	CLR	_	N	
F1.02.513	1-54A-H13	07/17/91	REC	_	N	
F1.02.514	1-54A-R21	08/14/91	CLR	_	N	
F1.02.550	1-55-SR12	07/17/91	CLR	_	N	
F1.02.551	1-55-H32	06/25/91	CLR	_	N	
F1.02.552	1-54A-DE01	09/11/91	REC	_	N	ADDED PER IWF-2430(A)
F1.03.010	1-01A-DE003	07/17/91	CLR	_	N	
F1.03.011	1-01A-DE002	06/24/91	CLR	_	N	
F1.03.013	1-01A-R2	08/23/91	REC	_	N	
F1.03.014	1-01A-DE008	08/23/91	CLR	_	N	
F1.03.015	1-01A-H4	08/23/91	REC	_	N	
F1.03.059	1-03-H58	07/15/91	REC	_	N	
F1.03.060	1-03-H59	08/06/91	CLR	_	N	
F1.03.061	1-03-R13	08/06/91	CLR	_	N	
F1.03.062	1-03-H65	08/06/91	CLR	_	N	

ITEM NUMBER	ID NUMBER	INSPECTION DATE	INSPECTION STATUS	INSPECTION LIMITED	GEO. REF.	COMMENTS
F1.03.063	1-03-R12	08/06/91	CLR	_	N	
F1.03.072	1-03A-SR96	07/31/91	CLR	_	N	
F1.03.101	1-03A-DE004	06/26/91	CLR	_	N	
F1.03.102	1-03A-DE058	08/29/91	CLR	_	N	
F1.03.103	1-03A-DE005	06/26/91	CLR	_	N	
F1.03.123	1-03A-DE060	06/25/91	CLR	_	N	
F1.03.129	1-03A-DE041	06/26/91	REC	_	N	
F1.03.130	1-03A-DE042	06/26/91	REC	_	N	
F1.03.131	1-03A-SR32	08/05/91	CLR	_	N	
F1.03.138	1-03A-SR30	08/18/91	CLR	_	N	
F1.03.139	1-03A-DE048	06/24/91	CLR	_	N	
F1.03.140	1-03A-0501	06/24/91	CLR	_	N	
F1.03.141	1-03A-SR26	07/17/91	CLR	_	N	
F1.03.144	1-03A-SR48	08/26/91	CLR	_	N	
F1.03.146	1-03A-H15	06/25/91	CLR	_	N	

ITEM NUMBER	ID NUMBER	INSPECTION DATE	INSPECTION STATUS	INSPECTION LIMITED	GEO. REF.	COMMENTS
F1.03.147	1-03A-SR49	09/04/91	CLR	_	N	
F1.03.149	1-03A-H103	06/25/91	REC	_	N	
F1.03.163	1-03A-H6070	08/06/91	REC	_	N	
F1.03.164	1-03A-H6178	08/06/91	REC	_	N	
F1.03.165	1-03A-H6177	08/06/91	CLR	_	N	
F1.03.166	1-03A-H6011	08/06/91	CLR	_	N	
F1.03.173	1-03A-SR96	08/26/91	CLR	_	N	
F1.03.174	1-03A-H79	09/04/91	CLR	_	N	
F1.03.193	1-03A-JWC-0301	06/25/91	CLR	_	N	
F1.03.194	1-03A-H53	08/10/91	CLR	_	N	
F1.03.196	1-03A-SR84	08/10/91	REC	_	N	
F1.03.200	1-03A-DE062	08/10/91	CLR	_	N	
F1.03.203	1-03A-H102	08/05/91	REC	_	N	
F1.03.204	1-03A-H54	07/17/91	CLR	_	N	
F1.03.205	1-03A-SR85	07/17/91	CLR	_	N	

DUKE POWER COMPANY
QUALITY ASSURANCE DEPARTMENT
PRE-SERVICE AND IN-SERVICE INSPECTION SYSTEM
OCONEE 1 INSERVICE INSPECTION RESULTS OUTAGE 13

ITEM NUMBER	ID NUMBER	INSPECTION DATE	INSPECTION STATUS	INSPECTION LIMITED	GEO. REF.	COMMENTS
F1.03.206	1-03A-H55	08/25/91	CLR	_	N	
F1.03.213	1-03A-H59	08/21/91	REC	_	N	
F1.03.215	1-03A-SR59	08/25/91	CLR	_	N	
F1.03.216	1-03A-SR58	08/25/91	CLR	_	N	
F1.03.219	1-03A-0200	07/17/91	CLR	_	N	
F1.03.222	1-03A-SR53	08/23/91	CLR	_	N	
F1.03.225	1-03A-H38	08/23/91	CLR	_	N	
F1.03.233	1-03A-H44	06/24/91	CLR	_	N	
F1.03.234	1-03A-H45	06/24/91	CLR	_	N	
F1.03.243	1-03A-H49	07/15/91	CLR	_	N	
F1.03.245	1-03A-SR61	08/01/91	CLR	_	N	
F1.03.313	1-03A-SR19	08/05/91	CLR	_	N	
F1.03.369	1-03A-H146	08/13/91	CLR	_	N	
F1.03.451	1-07A-DE027	06/24/91	CLR	_	N	
F1.03.452	1-07A-DE009	07/17/91	CLR	_	N	

ITEM NUMBER	ID NUMBER	INSPECTION DATE	INSPECTION STATUS	INSPECTION LIMITED	GEO. REF.	COMMENTS
F1.03.453	1-07A-DE010	07/17/91	CLR	_	N	
F1.03.472	1-07A-H6	07/17/91	REC	_	N	
F1.03.473	1-07A-H7	08/18/91	CLR	_	N	
F1.03.474	1-07A-DE029	08/18/91	CLR	_	N	
F1.03.477	1-07A-DE058	06/24/91	CLR	_	N	

5.0 Class 1 Inspection Results

Examinations were performed during Outage 13 on the Reactor Vessel, Pressurizer, Steam Generators 1A and 1B, Class 1 Piping of the Reactor Coolant, Low Pressure Injection and High Pressure Injection Systems, Reactor Coolant Pump Bolting, Valve Bolting and Supports.

5.1 Reactor Vessel

Four (4) Reactor Vessel Circumferential Seam Welds, six (6) Longitudinal Seam Welds, the Lower Head to Lower Shell Course Weld, eight (8) Nozzle to Shell Welds and Inside Radius Sections, the Upper Shell to Flange Weld and two (2) Nozzle to Safe End Butt Welds located at "W" and "Y" Axis were volumetrically examined by remote ultrasonic techniques. The required surface examination for the Core Flood Nozzles-to-Safe End Butt Welds was not performed (See Request for Relief ONS-001 included in Section 10 of this report). No reportable indications were found. During Outage 13, Reactor Vessel Outlet Nozzle to Vessel Welds, (Weld I.D. 1RPV-WR13, Item Number B03.090.001A), (Weld I.D. 1RPV-WR13A, Item Number B03.090.002A) respective Inside Radius Sections (ID 1RPV-WR13, B03.100.001, I.D. 1RPV-WR13A, Item Number B03.100.002) and the respective Nozzle-to-Pipe Welds (Weld I.D. 1PHA-1 Item Number B09.011.065 and Weld I.D. 1PHB-1, Item Number B09.011.077) were re-examined by ultrasonics per Duke Power Company's Request for Relief ONS-014. These examinations met the requirements of the 1989 ASME Section XI Code. Credit will be applied to the Third Inspection Interval, First Inspection Period requirements for the Outlet Nozzle-to-Vessel Welds, Table IWB-2500-1 Category B-D. No reportable indications were found. A copy of Request for Relief ONS-014 is included in Section 10 of this report.

The Lower Head Cap Section to Lower Head Ring Section Weld, (1RPV-WR35, Item Number B01.021.003) was not examined per exemption in 10 CFR 50.55A.B.2.

The Reactor Vessel internal surfaces and Core Support Structure were inspected by remote visual methods. No reportable conditions were found.

These examinations are described in more detail in Babcock and Wilcox's "1991 Reactor Vessel Examination Report" Summary included in Section 10 of this report.

Thirty (30) Reactor Vessel Closure Heat Nuts received a magnetic particle examination. Thirty (30) Reactor Vessel Closure Studs received an ultrasonic and a magnetic particle examination. No reportable indications were found.

Three (3) Reactor Closure Head Lug Welds located at "Y"-Axis, between "W-X" axis nearest "X" Axis and between "W-Z" Axis nearest "Z" Axis received a magnetic particle examination. No reportable indications were found.

Reactor Vessel CRD #59 Housing Welds received a dye penetrant examination. No reportable indications were found.

Sixty-nine (69) Reactor Vessel Closure Head J-Groove CRDM Nozzle Penetration Welds and fifty-two (52) Reactor Vessel Incore monitoring Nozzle Partial Penetration welds received a visual examination. No reportable conditions were found.

Reactor Vessel Closure Washers and Bushings for Stud Holes 20-22, 28-34, 45-54 and 60 received a visual examination. No reportable conditions were found.

Reactor Vessel CRD Housing Bolts and Nut Rings for CRD #59 received a visual examination. No reportable conditions were found.

5.2 Pressurizer

Reportable indications detected during Outages 6 and 7 on Pressurizer Shell to Heater Bundle Circle Seam Weld 1PZR-WP4, (Item Number B02.011.003) were re-examined by ultrasonics during Outage 13 in accordance with ASME Section XI, Paragraph IWB-2420 (b). Reportable indications were detected. Indications were evaluated and found acceptable per ASME Section XI IWB-3122.4 (b). Refer to Duke Power Company's Certificate of Engineering Calculation Number OSC-4547, dated November 15, 1991 included in Section 10 of this report. The surveillance inspection was extended to three (3) additional inspection periods per ASME Section XI Paragraph IWB-2420 (b). A copy of the inspection data sheets is included in this section of the report.

Pressurizer Lower Head to Heater Bundle Circle Seam Weld and Pressurizer Heater Bundle Longitudinal Welds located at "X" and "Y" Axis received an ultrasonic examination. No reportable indications were found.

Pressurizer Sensing and Sampling Nozzle to Vessel Welds and Inside Radius Sections located between "W" and "X" Axis, "Y" and "Z" Axis, 47° off "W" Axis and 40° off "W" Axis received ultrasonic examinations. No reportable indications were found.

Pressurizer Spray Nozzle to Safe End Butt Weld received an ultrasonic and a dye penetrant examination. Pressurizer Relief Nozzle to Safe End Butt Welds located between "X-Y" Axis and "Z-W" Axis received a dye penetrant examination. No reportable indications were found.

Pressurizer Integrally-Welded Attachments located at "X" Axis and between "W-X" Axis received a magnetic particle examination. Reportable indications detected during Outages 6 & 7 on integrally-welded attachments located between "X-Y" Axis (Weld No. 1PZR-WP82-XY, ISI Item No. B08.020.002) at "Y" Axis (Weld No. 1PZR-WP82-Y, ISI Item No. B08.020.003) between "Y-Z" Axis (Weld No. 1PZR-WP82-YZ, ISI Item No. B08.020.004) and at "W" Axis (Weld No. 1PZR-WP82-W, ISI Item No. B08.020.007) respectively were re-examined by magnetic particle inspection during Outage 13, per ASME Section XI, Paragraph IWB-2420(b). No reportable indications were found.

Pressurizer Lower 16 Heater Bundle Studs received a visual examination. No reportable conditions were found.

5.3 Steam Generators

Reportable indications in Steam Generator 1A Upper Head-to-Tubesheet Weld, 1SGA-WG58-1 (Item No. B02.040.001), detected during Outage 8 were re-examined by ultrasonics during Outage 13, per ASME Section XI, Paragraph IWB-2420(b). No reportable indications were found.

Steam Generator 1B Lower Head-to-Tubesheet Weld received an ultrasonic examination. No reportable indications were found.

Steam Generator 1A and 1B Inlet Nozzle to Vessel Welds and Inside Radius Sections received ultrasonic examinations. No reportable indications were found.

Steam Generator 1B Upper and Lower Manway Studs and Nuts and Upper and Lower Head Inspection Cover Bolting received a visual examination. No reportable conditions were found.

5.4 Piping

Dissimilar Metal Butt Welds:

Two (2) dissimilar metal butt welds, nominal pipe size four inches and greater received an ultrasonic and a dye penetrant examination. No reportable indications were found.

Seven (7) dissimilar metal butt welds, nominal pipe size less than four inches, received a dye penetrant examination. No reportable indications were found.

Similar Metal Welds:

Nominal pipe size four inches and greater:

Eight (8) circumferential butt welds, were examined by remote ultrasonic techniques. These examinations are described in more detail in Babcock and Wilcox's "1991 Reactor Vessel Examination Report" Summary included in Section 10 of this report.

Six (6) circumferential butt welds received an ultrasonic and a dye penetrant examination. A reportable flaw indication was found in weld 1PIB1-5, (ISI Item No. B09.011.036). Refer to Problem Investigation Report 1-091-0085 included in Section 9 of this report. The indication was evaluated and found acceptable per IWB-3610 as shown in Duke Power Company Calculation Work Sheet No. OSC-1522, included in Section 10 of this report. The component containing the flaw indication was declared acceptable for continued service. The inspection sample was extended to include eleven (11) additional welds during Outage 13.

The inspection data sheets for the reportable item are included in this section of the report. No other reportable indications were found.

Four (4) longitudinal welds received an ultrasonic and a magnetic particle examination. No reportable indications were found.

Two (2) branch pipe connection welds received a magnetic particle examination. No reportable indications were found.

Nominal pipe size four inches and smaller:

Seventeen (17) circumferential welds received a dye penetrant examination. No reportable indications were found.

Piping Integrally-Welded Attachments:

One (1) integrally-welded attachment on the Low Pressure Injection System received a dye penetrant examination. No reportable indications were found.

Piping Supports:

Sixteen (16) Class 1 Component Supports received a visual examination as required by ASME Section XI, Article IWF-2000. No reportable conditions were found.

5.5 Pumps

Reactor Coolant Pumps 1A1, 1A2, 1B1 and 1B2 Main Flange Bolting received an ultrasonic examination. No reportable indications were found.

Reactor Coolant Pumps 1B1 and 1B2 Lower Seal Housing Bolts received a visual examination. No reportable conditions were found.

5.6 Valves

The pressure retaining bolting in Valves 1CF-11, 1CF12, 1CF13, 1CF14, and 1LP-48 received a visual examination. No reportable conditions were found.

5.7 Steam Generator Tubing

The Inconel 600 tubing in the two Babcock and Wilcox Once-Through Steam Generators (OTSGs) A and B at Duke Power Company's Oconee Unit 1, were examined by eddy current techniques during August 1991. The tubing in the generators measure 0.625" nominal outside diameter X 0.037" nominal wall thickness. The examinations were performed by Duke Power, Zetec and Babcock and Wilcox Nuclear Services (BWNS) Company during the 13th refueling outage.

Approximately 60% of the tubes in steam generators A and B were inspected full length with magnetic-bias bobbin coil probes. Also, all of the previously installed sleeves were examined with a bobbin/crosswound probe. Numerous tubes were inspected with Zetec's motorized rotating pancake coil (MRPC) probe. In addition, explosive and rolled plugs were examined using the MRPC probe and analyzed with the BWNS Eddy 360 system.

The following is a summary of the results of the bobbin coil/MRPC eddy current examination for each generator.

OTSG A:

- Eddy Current examinations began on 8/7/91 and were completed on 8/26/91.
- 12 tubes were removed from service by plugging.
- 9,357 tubes were examined by bobbin coil full length.
- 6 tubes examined with bobbin coil contained indications of 40% thru-wall (TW) or greater.
- 21 tubes examined with bobbin coil contained indications 20-39% TW.
- 261 sleeves were examined with a bobbin/crosswound probe.
- 71 tubes in the lane/wedge region were examined with MRPC at the 15th TSP and Upper Tubesheet Secondary Face (UTSF).
- 111 Special Interest tubes were examined using MRPC.
- 70 Rolled plugs were examined.
- 47 Explosive plugs were examined.

OTSG B:

- Eddy Current examinations began 8/7/91 and were completed on 8/31/91.
- 40 tubes were removed from service by plugging.
- 9,457 tubes were examined by bobbin coil full length.
- 26 tubes examined with bobbin coil contained indications of 40% TW or greater.
- 117 tubes examined with bobbin coil contained indications of 20-39% TW.
- 208 sleeves were examined with bobbin/crosswound probe.
- 69 tubes in the lane/wedge region were examined with MRPC at the 15th TSP and UTSF.
- 234 Special Interest tubes were examined using MRPC.
- 201 Rolled plugs were examined.
- 405 Explosive plugs were examined.

A detailed description of the Oconee 1 Refueling Outage 13 eddy current inspection is provided in the August 1991 Eddy Current Examination Report on file at the Corporate Office in Charlotte, North Carolina.

5.8 System Leakage Tests

The Class 1 Pressure Boundary was subjected to a system leakage test as required by ASME Section XI, Article IWB-5000. No reportable conditions were found.

5.9 Class 1 Repairs and Replacements

Repairs and replacements for work performed from June 5, 1990 to September 26, 1991 are itemized in Section 11 of this report.

DUKE POWER COMPANY

ULTRASONIC EXAMINATION DATA SHEET FOR PLANAR REFLECTORS

Exam Start: 14:05 | FORM NDE UT-2A

Exam Finish: 16:10 | Revision 1

Station: OCONEE | Unit: 1 | Component/weld ID: 1PZR-WP4 | Date: 9/3/91

Nominal Material Thickness (in./ dia.): 6.188 | Weld Length (in.): 24 | Surface Temperature: 80.4 deg F

Surface Condition: GROUND | Lo: INTERSECT CIRC SEAM | Pyrometer S/N: 32597 cal due: 11/28/91

Examiner: R.B. Glidden David K. Gunn II Level: II

Examiner: Level: I

Calibration sheet No: 911068, 911069, 911070

SCANS: 45 ■ +14 dB

45T ■ +14 dB 60 ☐ dB

0 ■ +32 dB 60T ☐ dB

Other: 35 dB 14

Configuration: CIRC

>>>>> Flow >>>>>

PZR SHELL to HT BUNDLE

Procedure No: NDE 620 NDE 640 Rev: 0 0 F/C: 91-06 191-07

Applies to NDE-680 only

Skew angle: N/A

Applies only to NDE-620, 640 and 680

IND NO.	∠	Max % dac	W Max	L Max	MP Max	L1 20%dac HMA 50%dac	L2 20%dac HMA 50%dac	W1 20%dac HMA 50%dac	W2 20%dac HMA 50%dac	Mp1 20%dac HMA 50%dac	Mp2 20%dac HMA 50%dac	Beam Dir	Exam Surf.	Scan	Damps
1	45	100	9.4	51.75	9.4	51.5	54.0	9.1	9.9	8.89	9.49	2	1	AXIAL	NO
			9.4	52.65	9.2			9.1	9.9	8.89	9.5				
			9.4	53.55	9.2			9.1	9.9	8.89	9.54				
2	35	90	7.1	53.75	8.18	53.25	54.375	6.8	7.5	8.03	8.4	2	1	AXIAL	NO

Remarks:

Limitations: see NDE-UT-4 ☐ None: ■ | ACCEPTABLE/NO RECORDABLE INDICATIONS: ☐ | sheet 1 of 2

Reviewed By: D.C. Robinson Level: II Date: 9-6-91

Authorized Inspector [signature] Date 9-15-91

Item No: B02.011.003

DUKE POWER COMPANY

ULTRASONIC EXAMINATION DATA SHEET FOR LAMINAR REFLECTORS

Exam Start: 14:05 | Exam Finish: 14:35 | FORM NDE U. 3A | Revision 1

Station: OCONEE | Unit: 1 | Component/weld ID: 1PZR-WP4 | Date: 9-3-91

Nominal Material Thickness (in.): 6.188 | Weld Length (in.): 24 | Surface Tepmperature: 80.4 Deg F

Surface Condition: GROUND | Lo: INTERSECT CIRC SEAM | Pyrometer S/N: 32597 | cal due: 11/28/91

Examiner: Richard B. Childers Level: II | Calibration sheet No: 911069 | Configuration: CIRC

Examiner: TSBibb Level: II | >>>>>> Flow >>>>>> Mp4

Procedure no: NDE 640 Rev: 0 F/C: 1/91-07 | PZR SHELL to HT BUNDLE

IND NO.	∠	Ampl ≥ rem BW LOB	L1 ≥ rem BW LOB	W1 ≥ rem BW LOB	Mp1 ≥ rem BW LOB	W2 ≥ rem BW LOB	Mp2 ≥ rem BW LOB	L2 ≥ rem BW LOB	W1 ≥ rem BW LOB	Mp1 ≥ rem BW LOB	W2 ≥ rem BW LOB	Mp2 ≥ rem BW LOB	Exam Surf.	Damps
1	0	40	47.2	3.9	6.281	4.9	6.281	49.2					1	NO

L	W1	Mp1	W2	Mp2	L	W1	Mp1	W2	Mp2

L	W1	Mp1	W2	Mp2	L	W1	Mp1	W2	Mp2

Remarks:

Limitations: see NDE-UT-4 ☐ None: ☑ | ACCEPTABLE/NO RECORDABLE INDICATIONS: ☐ | sheet 2 of 2

Reviewed By: P.C. Robinson Level: II Date: 9-6-91 | Authorized Inspector: [illegible] ANI/HNI Date 9-15 91 | Item No: B02.011.003

Form 00184 (RH-88)

DUKE POWER COMPANY

Station OCONEE Unit 1 Rev. ____ File No. ____ Sheet 1 Of 4

Subject 1PZR-WP4

By J.J. McAuliffe Date ____

Prob No. B02.011.003 Checked By ____ Date ____

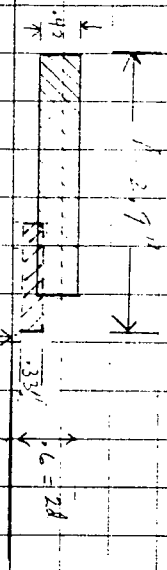

S = .1"

2d = .6" d = .3

.3 x .4 = .12

S < .4d therefore flaw in surface connected

a = .6 + .1 = .7

a/l = .7/2.9 = .24 aspect ratio

a/t% = 10% - Rejectable

James J. McAuliffe UT Level III

T = 7"

#1 (200) X=45 Tuid (2.5 - 2.7) x cos45

CLOD

DUKE POWER COMPANY

ULTRASONIC EXAMINATION DATA SHEET FOR PLANAR REFLECTORS

Exam Start: 12:06 | FORM NDE UT-2A

Exam Finish: 13:06 | Revision 1

Station: OCONEE | Unit: 1 | Component/weld ID: 1PIBI-5 | Date: 8/13/91

Nominal Material Thickness (in./ dia.): 33.5 / 3.0 | Weld Length (in.): 105.24 | Surface Temperature: 69.4 deg F

Surface Condition: GROUND | Lo: WEST SIDE OF PIPE | Pyrometer S/N: 32916 cal due: 1/29/92

Examiner: D.C. Robinson Level: II | SCANS: 45 ■ +14 dB | Configuration: CIRC

Examiner: S.L. Bibb Level: II | 45T ■ +14 dB 60 ■ +14 dB | >>>>> Flow >>>>>

Calibration sheet No: 911015, 911016 | 0 ☐ dB 60T ☐ dB | ELBOW to PIPE

Other: dB

Applies to NDE-680 only | *Applies only to NDE-620, 640 and 680*

Procedure No: NDE 600 Rev: 1 F/C: 9102 | Skew angle: N/A

IND NO.	∠	Max % dac	W Max	L Max	MP Max	L1 20%dac HMA 50%dac	L2 20%dac HMA 50%dac	W1 20%dac HMA 50%dac	W2 20%dac HMA 50%dac	Mp1 20%dac HMA 50%dac	Mp2 20%dac HMA 50%dac	Beam Dir	Exam Surf.	Scan	Damps
1	45	50%	3.5	33.25	3.64	32.2	33.8					2	1	AXIAL	NO

Remarks: NO OTHER INDICATIONS FOUND

Limitations: see NDE-UT-4 ■ None: ☐ | ACCEPTABLE/NO RECORDABLE INDICATIONS: ☐ | sheet 1 of 5

Reviewed By: J.T. Moss Level: II Date: 8-14-91 | Authorized Inspector A.T. Elgin ANII Date 8-20-91 | Item No: B09.011.036

DUKE POWER COMPANY

ULTRASONIC FLAW SIZING DATA SHEET

Exam Start: 12:02	FORM NDE 670B
Exam Finish: 12:10	Revision 0
Station: OCONEE	Unit: 1
Component/weld Identification: 1PIB1-5	Date: 8/26/91
Measured Wall Thickness (in.): 3.20 [illegible]	Material Type: C.S.
Surface Temperature: 63 deg F	
Surface Condition: AS GROUND	L max: 33.25 (from examination data sheet)
Pyrometer S/N: 32597	
Examiner: D.L. Robinson Level: II	Configuration: CIRC
Examiner: [illegible] Level: II	Calibration sheet No: 911045

Through Wall Measurement

Exam Surface	30-70-70	PATT	SPOT	Bi Modal	HALT
1	N/A	2.38/2.8	N/A	N/A	N/A

Reported Through Wall Dimension: 2.8-2.38= .42

Subsurface ☐ a = .4

Surface Connected ☐ l = 1.6

a/l = .25

Surface By Proximity ☒ a/t % = 14%

Sketch:

Remarks:

sheet 2 of 5

Reviewed By:	Level:	Date:	ANII Review	Date	Item No:
G J Moss	II	8-26-91	R F Elgin ANII/ANII	8-27-91	B09.011.036

DUKE POWER COMPANY

UT PROFILE/PLOT/RESOLUTION SHEET

NDE-UT-5

Revision 0

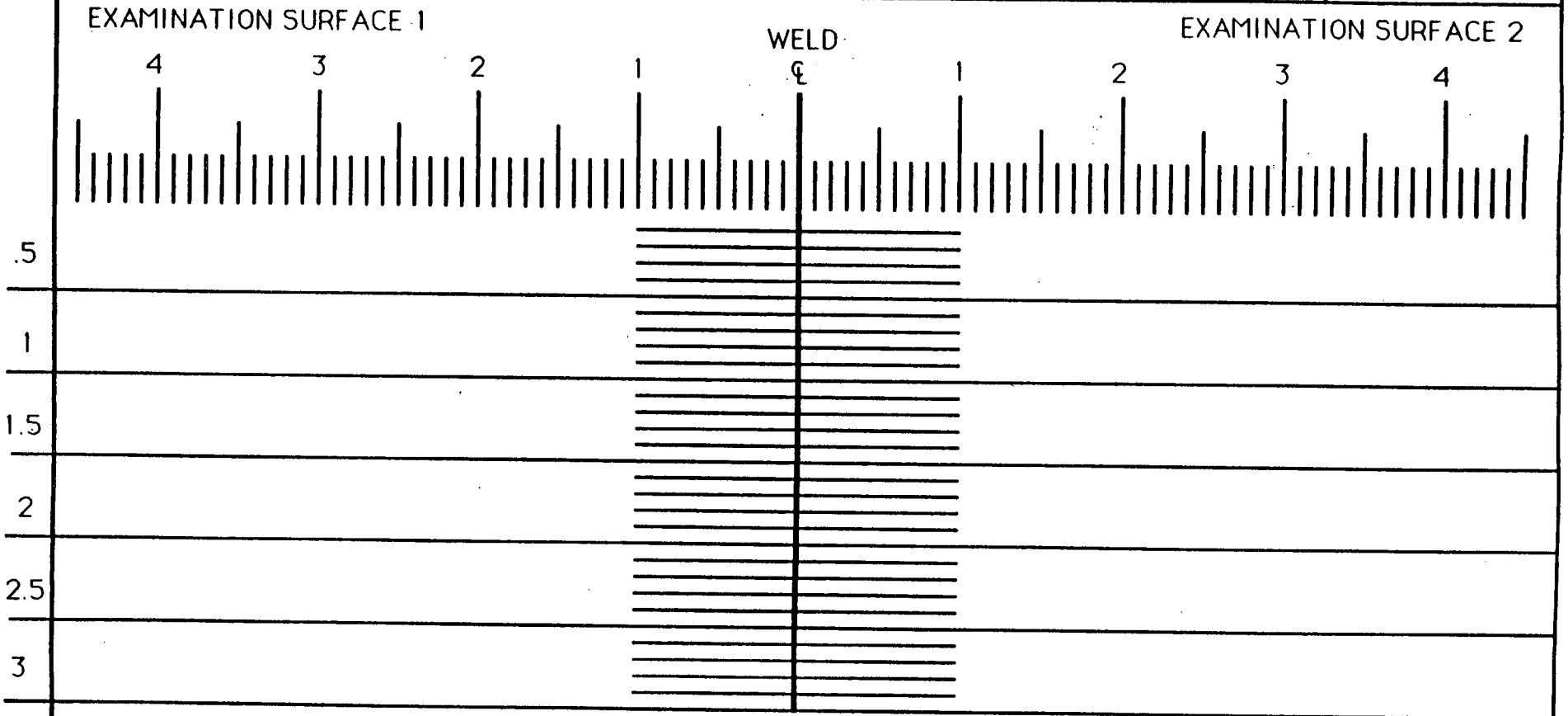

Component ID/Weld No. 1PIB1-5

Resolution/Comments:

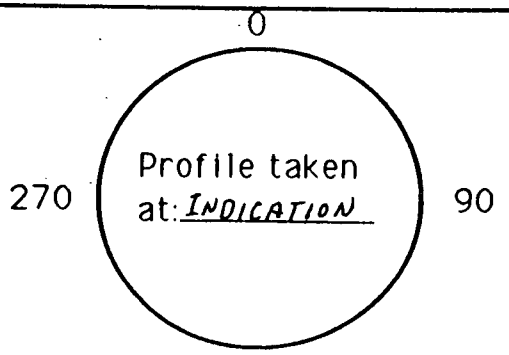

Examiner: O.C. Robinson	Level: II	Date: 8-13-91
Reviewed By: D J Mason	Level: II	Date: 8-14-91
Authorized Inspector		Date: 8-27-91

Sheet 3 of 5

DUKE POWER COMPANY

Form 00184 (R4-88)

4 5

Station OCONEE Unit 1 Rev. ____ File No. ____ Sheet 5 of 6

Subject B09.011.036

____ By ____ Date 8-13-9

Prob No. ____ Checked By ____ Date ____

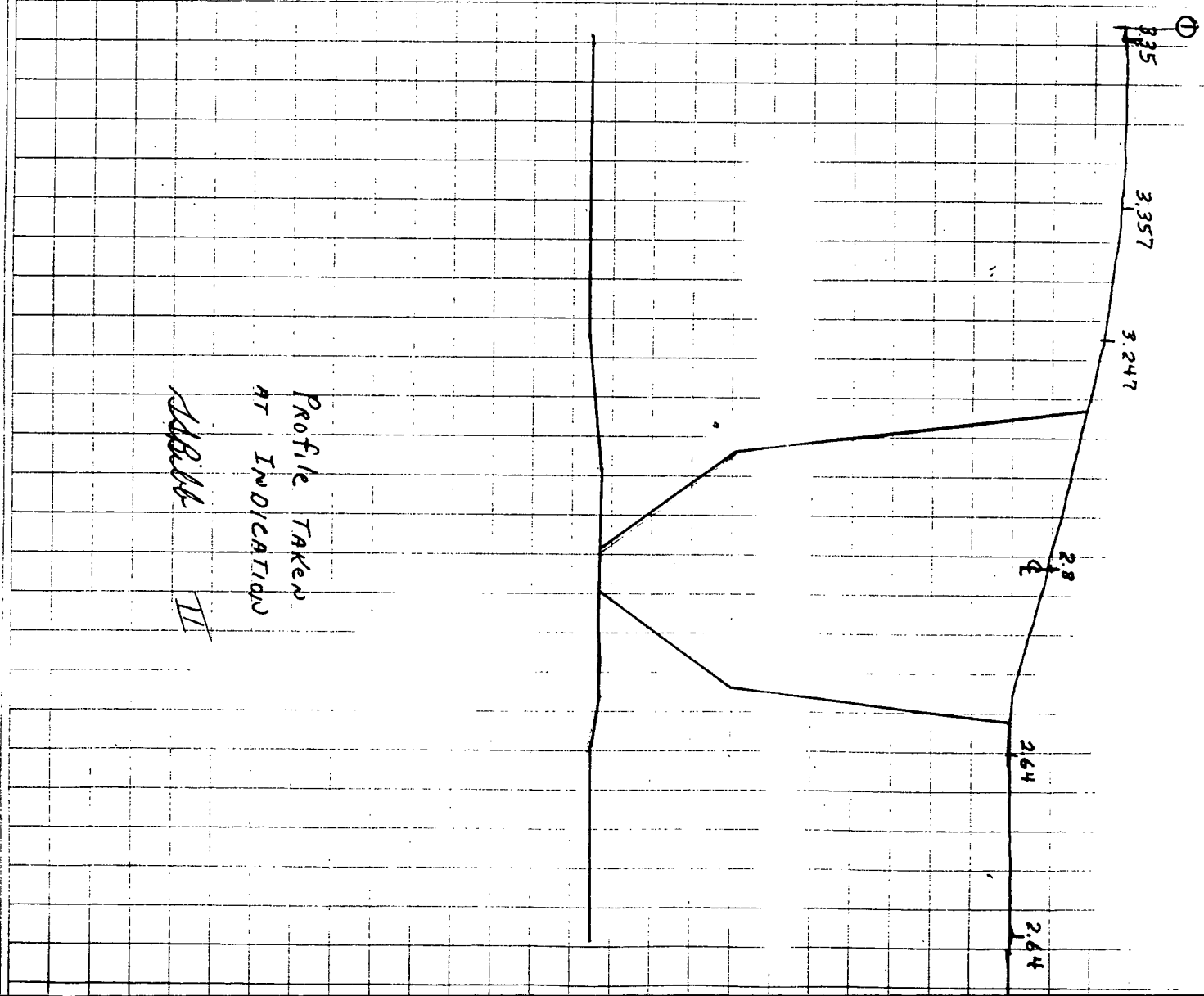

PROFILE TAKEN AT INDICATION

DUKE POWER COMPANY
ISI LIMITATION REPORT

FORM NDE- UT-4
Revision 1

Component/Weld ID: 1PIB1-5 Item No: B09.011.036

remarks:

☐ NO SCAN SURFACE BEAM DIRECTION
☒ LIMITED SCAN ☒ 1 ☐ 2 ☐ 1 ☒ 2 ☐ cw ☐ ccw
FROM L 0 to L 360 INCHES FROM WO 0 to 2.3
ANGLE: ☐ 0 ☒ 45 ☒ 60 other ____ FROM ____ DEG to ____ DEG

☐ NO SCAN SURFACE BEAM DIRECTION
☒ LIMITED SCAN ☐ 1 ☒ 2 ☒ 1 ☐ 2 ☐ cw ☐ ccw
FROM L 0 to L 360 INCHES FROM WO 0 to 3.0
ANGLE: ☐ 0 ☒ 45 ☒ 60 other FROM ____ DEG to ____ DEG

☐ NO SCAN SURFACE BEAM DIRECTION
☒ LIMITED SCAN ☐ 1 ☒ 2 ☐ 1 ☐ 2 ☒ cw ☒ ccw
FROM L 0 to L 360 INCHES FROM WO -.70 to 3.0
ANGLE: ☐ 0 ☒ 45 ☐ 60 other FROM ____ DEG to ____ DEG

☐ NO SCAN SURFACE BEAM DIRECTION
☐ LIMITED SCAN ☐ 1 ☐ 2 ☐ 1 ☐ 2 ☐ cw ☐ ccw
FROM L ____ to L ____ INCHES FROM WO ____ to ____
ANGLE: ☐ 0 ☐ 45 ☐ 60 other FROM ____ DEG to ____ DEG

Sketch(s) attached ☐ yes ☒ no

Prepared By: D.L. Robinson Level: II Date: 8-13-91 Sheet 45 of 65

Reviewed By: D.J. Moss Date: 8-14-91 Authorized Inspector: R.F. Glenn ANII/AIVII Date: 8-20-91

©****** B&W TUBAN(TM) (VER. 3.1)****** Saturday March 28, 1992 12:39 PM

Plant: OCONEE UNIT 1 Steam Generator: B

Order: Sort by ROW, TUBE

Title: TUBES PLUGGED - 8/91 RFO

NO.	ROW	TUBE
1.	4-	15
2.	5-	39
3.	6-	41
4.	7-	50
5.	7-	51
6.	10-	51
7.	12-	6
8.	14-	74
9.	19-	3
10.	32-	73
11.	35-	5
12.	35-	90
13.	47-	24
14.	49-	7
15.	50-	6
16.	52-	122
17.	55-	3
18.	59-	116
19.	60-	5
20.	75-	6
21.	75-	114
22.	76-	118
23.	77-	20
24.	77-	23
25.	77-	114
26.	77-	123
27.	84-	124
28.	86-	128
29.	87-	4
30.	92-	120
31.	92-	121
32.	93-	2
33.	95-	11
34.	95-	13
35.	111-	1
36.	112-	5
37.	116-	16
38.	118-	97
39.	130-	62
40.	136-	78

6.0 Class 2 Inspection Results

Inspections were performed during Outage 13 on Steam Generators 1A and 1B, Core Flood Tank 1B, vessel and piping integrally-welded attachments, piping welds of Low Pressure Injection, Reactor Building Spray, Auxiliary Feedwater, Main Steam, and Main Feedwater Systems and supports.

6.1 Steam Generators

Steam Generator 1B Shell to Bottom Tubesheet Weld received an ultrasonic examination. No reportable indications were found.

Steam Generator 1A Steam Outlet Nozzle to Shell Weld located between "W-X" Axis, Weld No. 1SGA-W23-1, (ISI Item Numbers C02.021.001 and C02.021.001A) received an ultrasonic and a magnetic particle examination. The Inside Radius Section received an ultrasonic examination. A reportable indication was found on the Nozzle to Shell Weld by the magnetic particle examination technique. The indication was repaired and re-examined. Refer to Problem Investigation Reports 1-091-0089 and 4-091-0093 included in Section 9 of this report. The inspection scope was extended per ASME Section XI, Paragraph IWC-2430(a) to include an additional nozzle weld examination. No other reportable indications were found. The inspection data sheets are included in this section of the report. An Operability Evaluation, dated September 10, 1991, was performed by Duke Power Company's Design Engineering Department. A copy is included in Section 10 of this report.

Two (2) Steam Generator 1A Feedwater Header Integrally-Welded Attachments, located between "W-X" Axis received a magnetic particle examination. No reportable indications were found.

6.2 Core Flood Tanks

Core Flood Tank 1B Outlet Nozzle to Shell Weld received an ultrasonic and a magnetic particle examination. The Inside Radius Section received an ultrasonic examination. No reportable indications were found.

Two (2) Core Flood Tank 1A Support Integrally-Welded Attachments received a magnetic particle examination. No reportable indications were found.

6.3 Piping

Welds one-half inch and less nominal wall thickness:

Twenty-four (24) circumferential welds and six (6) longitudinal welds received a dye penetrant examination. Two (2) circumferential welds received a magnetic particle examination. No reportable indications were found.

Welds greater than one-half inch nominal wall thickness:

Ten (10) circumferential welds and three (3) longitudinal welds received a radiographic and a magnetic particle examination. A reportable indication was found by the magnetic particle examination technique, Weld ID Number 1-03-3-28B (ISI Item No. C05.021.103A). The indication was removed by filing and re-examined. Refer to Problem Investigation Report 1-091-0079 included in Section 9 of this report. The scope of the inspection was extended per ASME Section XI, Paragraph IWC-2430(a) to include five (5) additional welds. No other reportable indications were found. A copy of the inspection data sheets is included in this section of the report.

Two (2) pipe branch connection circumferential welds received a dye penetrant examination. No reportable indications were found.

Piping integrally-welded attachments:

Six (6) attachments received a magnetic particle examination. Five (5) attachments received a dye penetrant examinations. No reportable indications were found.

6.4 Component Supports

Fifty (50) Class 2 Component Supports received a visual examination as required by ASME Section XI, Article IWF-2000. Reportable conditions were found on Support ID Number 1-54A-0-435B-DE10, (ISI Item No. F1.02.478).

Refer to Problem Investigation Report 1-091-0083 included in Section 9 of this report. The support was repaired per Duke Power Company's Design Engineering Department's Comments/Disposition Sheet SN/31 and Exempt Change OE-4211 included in Section 10 of this report. The scope of the inspection was extended per ASME Section XI, Paragraph IWF-2430(a) to include fourteen (14) additional supports. No other reportable conditions were found. The inspection data sheets are included in this section of the report.

Reportable conditions detected during Outage 10 on Support 1-53B-435B-DM-2601, (ISI Item No. F1.02.402) were re-examined during Outage 13 per ASME Section XI, Paragraph IWF-2420(b). No reportable conditions were found.

6.5 System or Component Functional/Hydrostatic Tests

Class 2 Hydrostatic Tests were performed as required by ASME Section XI, Article IWC-5000. No reportable conditions were found.

All of the Class 2 System or Component Functional/Hydrostatic Tests required for the Second Inspection Period have been completed.

6.6 Class 2 Repairs and Replacements

Repairs and Replacements for work performed from June 5, 1990 to September 26, 1991 are itemized in Section 11 of this report.

DUKE POWER COMPANY

ULTRASONIC EXAMINATION DATA SHEET FOR PLANAR REFLECTORS

Exam Start: 9:15 | FORM NDE UT-2A

Exam Finish: 10:25 | Revision 1

Station: OCONEE | Unit: 1 | Component/weld ID: 1SGA-WG23-1 | Date: 8/20/91

Nominal Material Thickness (in./ dia.): 6.625 | Weld Length (in.): 91 | Surface Temperature: 72 deg F

Surface Condition: GROUND | Lo: TOP OF NOZZLE | Pyrometer S/N: 32957 cal due: 11/28/91

Examiner: [signature] Evan D. Campbell Level: II I

Examiner: [signature] Level: II

Calibration sheet No: 911032 911033 911034

SCANS: 45 [■] +20 dB
45T [■] +20 dB 60 [■] +14 dB
0 [■] +20 dB 60T [■] +14 dB
Other: dB

Configuration: NOZZLE TO SHELL
<<<<<< Flow <<<<<
NOZZLE to SHELL

Procedure No: NDE 620 Rev: 0 F/C: N/A

Applies to NDE-680 only
Skew angle: N/A

Applies only to NDE-620, 640 and 680

IND NO.	∡	Max % dac	W Max	L Max	MP Max	L1 20%dac HMA 50%dac	L2 20%dac HMA 50%dac	W1 20%dac HMA 50%dac	W2 20%dac HMA 50%dac	Mp1 20%dac HMA 50%dac	Mp2 20%dac HMA 50%dac	Beam Dir	Exam Surf.	Scan	Damps
1	45	25%	2.3	360	4.8			2.0	2.6	4.5	5.1	2	1	AX	NO
2	45	20%	3.5	6.1	6.7	5.7	6.5	3.0	4.0	6.1	7.0	2	1	AX	NO
3	45	316	1.0	360	9.7			TOE	1.5	TOE	9.9	2	1	AX	NO
4	60	100	4.25	360	11.5			3.4	5.0	10.8	12.16	2	1	AX	NO

Remarks: VESSEL DIA. 29.0

Limitations: see NDE-UT-4 [ ] None: [■] ACCEPTABLE/NO RECORDABLE INDICATIONS: [ ] sheet 1 of 3

Reviewed By: D.C. Robinson Level: II Date: 8-26-91

Authorized Inspector: R.F. Elgin ANI/ANII Date: 8-27-91

Item No: C02.021.001

DUKE POWER COMPANY

ULTRASONIC EXAMINATION DATA SHEET FOR LAMINAR REFLECTORS

Exam Start: 9:15			FORM NDE UT-5A
Exam Finish: 10:25			Revision 1
Station: OCONEE	Unit: 1	Component/weld ID: 1SGA-WG23-1	Date: 8/20/91
Nominal Material Thickness (in.): 6.625		Weld Length (in.): 91	Surface Tepmperature: 72 Deg F
Surface Condition: AS GROUND		Lo: TOP OF NOZZLE	Pyrometer S/N: 32597 cal due: 11/28/91
Examiner: J W Sitzer	Level: II	Calibration sheet No: 911032	Configuration: NOZZLE TO SHELL
Examiner: Evans D. Campbell	Level: I		<<<< Flow <<<< Mp4
Procedure no: NDE -640	Rev: 0 F/C: #1		NOZZLE to SHELL

IND NO.	4	Ampl ≥ rem BW LOB	L1 ≥ rem BW LOB	W1 ≥ rem BW LOB	Mp1 ≥ rem BW LOB	W2 ≥ rem BW LOB	Mp2 ≥ rem BW LOB	L2 ≥ rem BW LOB	W1 ≥ rem BW LOB	Mp1 ≥ rem BW LOB	W2 ≥ rem BW LOB	Mp2 ≥ rem BW LOB	Exam Surf.	Damps

L	W1	Mp1	W2	Mp2	L	W1	Mp1	W2	Mp2

L	W1	Mp1	W2	Mp2	L	W1	Mp1	W2	Mp2

Remarks:

Limitations: see NDE-UT-4 ☐ None: ☒ ACCEPTABLE/NO RECORDABLE INDICATIONS: ☒ sheet 2 of 3

Reviewed By:	Level:	Date:	Authorized Inspector:	Date	Item No:
D.C. Robinson	II	8.29.91	NF Ellis ANII/ANII	8-27-91	C02.021.001

DUKE POWER COMPANY

Form 00184 (R4-88)

Station Oconee Unit ____ Rev. ____ File No. ____ Sheet 3 Of 3

Subject ISI A-NOZ 3-1 Item # C02.021.001, C02.022.001

By David K. Zimmerman Date 8-20-91

Prob No. ____ Checked By [signature] Date 8.26.91

STEAM GEN. A

NOZZLE TO SHELL

SCALE: 1.0" = 2.0"

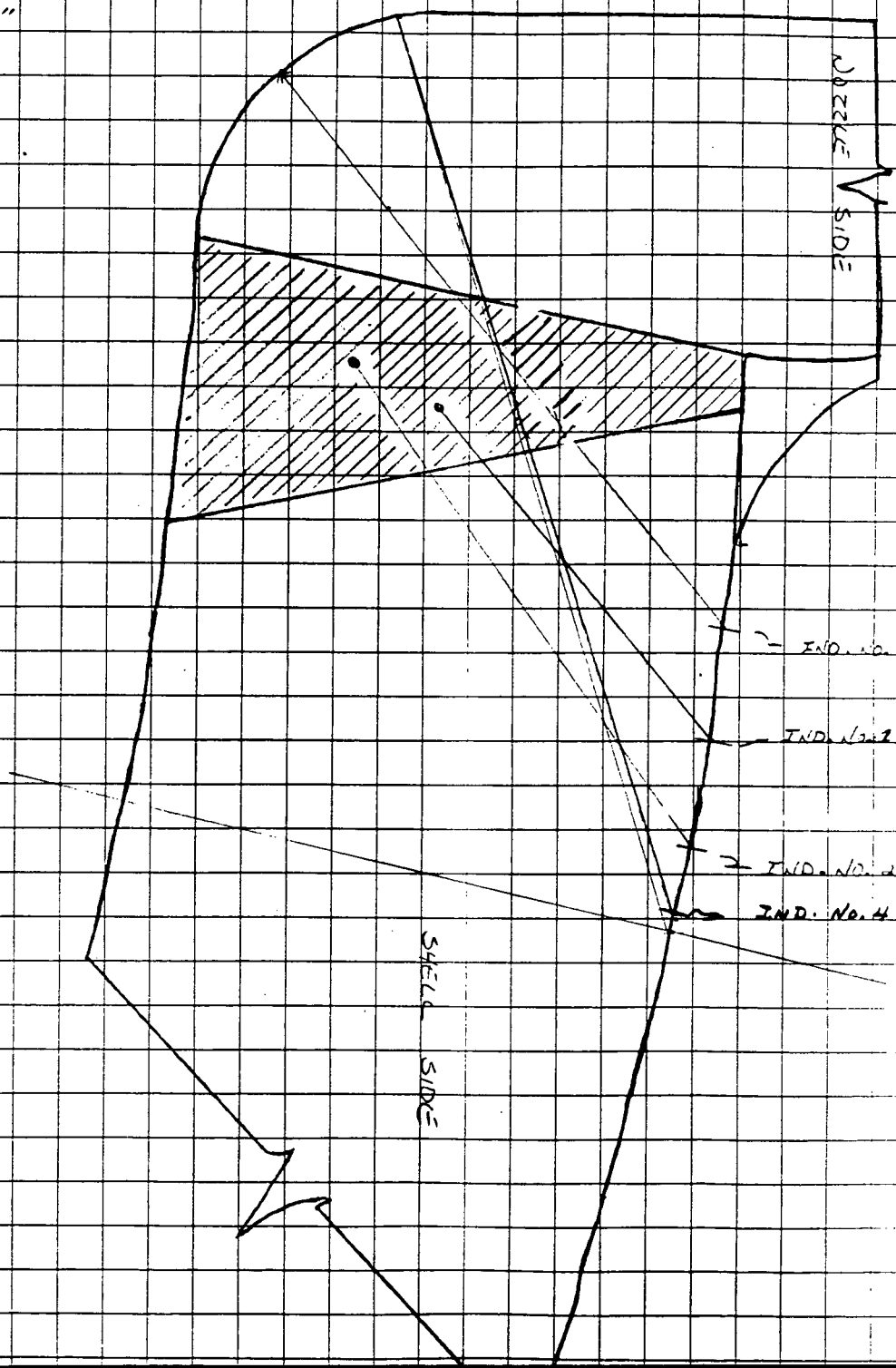

Form 00184 (RH-88)

DUKE POWER COMPANY

Station Oconee Unit 1 Rev. ____ File No. ____ Sheet 1 Of 1

Subject Indication Evaluation on Steam Gen B Weld 1SGA-WG-23-1
Item # C02.021.001

By James J. McArdle Date 8-29-91

Prob No. ____ Checked By ____ Date ____

1. Subsurface slag inclusion

$2a = .4$ $a = .2$ $l = .8$

$a/l = .25$ $a/t\% = .2/6.4 = 3\%$ Acceptable

MAX $a/t\% = 3.7\%$ per Table IWB-3512-1

2. Subsurface slag inclusion

$2a = .6$ $a = .3$ $l = .8$

$a/l = .38$ $a/t\% .3/6.4 = 4.7\%$ Acceptable

MAX $a/t\% = 5\%$ using interpolation per Table IWB-3512-1

3. Geometric reflection from nozzle inner radius

4. Geometric reflection from nozzle inner radius

James J. McArdle
Level III UT
QA/ISI

Station Oconee Unit ____ Rev. ____ File No. ____ Sheet ____ Of ____
Subject USCA - NC83-1 Item # C02.021.001, C02.022.001
By David K. Zimmerman Date 8-20-
Prob No. ____ Checked By DC Bowman Date 8-26-91

STEAM GEN. A
NOZZLE TO SHELL
SCALE: 1.0" = 2.0"

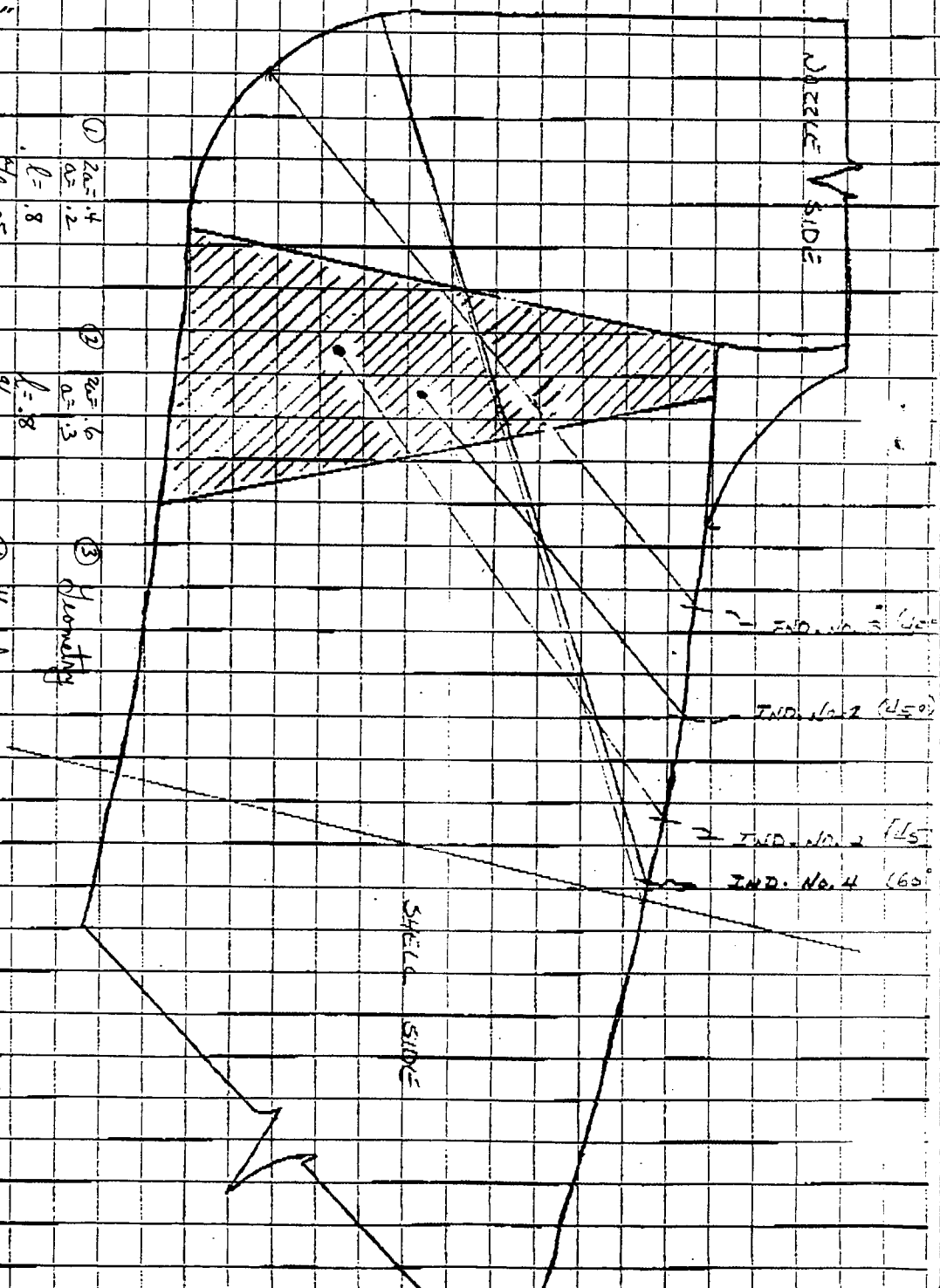

① 2a = .4, a = .2, l = .8, a/l = .25, a/t = 3% Accept
② 2a = .6, a = .3, l = .8, a/l = .4, a/t = 4% Accept
③ Geometry C
④ Geometry A

Form 26294 (R5-89)

Form NDE-25A	Revision 1

DUKE POWER COMPANY

PROJECT OCONEE

MAGNETIC PARTICLE/LIQUID PENETRANT EXAMINATION REPORT

Weld No. 1SGA-WG23-1 Unit No. ONE Date 8-16-91

Diameter 29.0" Schedule/Thickness 6.625 Type Material SS ☐ CS ☒

Work Order No. N/A QA Condition 1

Procedure NDE-25BG / Rev 14

NDE-98 Approved N/A

Radiation Level N/A

Inspector	Level
G J Moss	II
G S Bibb	II

SKETCH OF ITEM EXAMINED

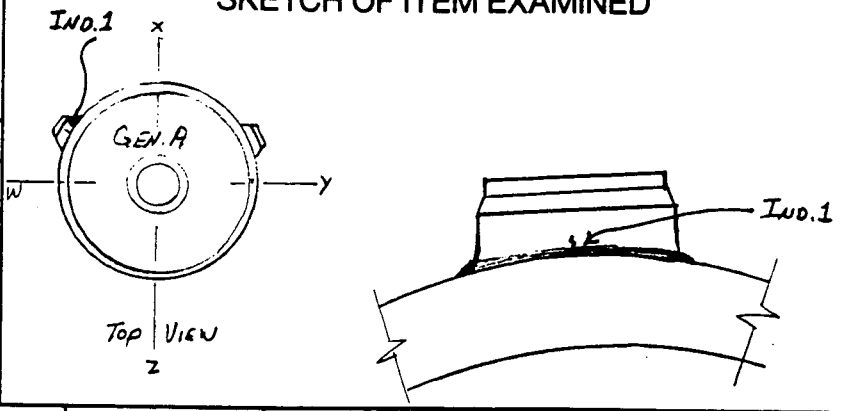

Indication Number	Indication Dimensions Length/Width/Diameter, etc.	Acceptable	Reportable	Reference Documents
1	.5" Long	✓		NDE 25 BG
REFERENCE PIR 4-091-0093 AND 1-091-0089				
	RGR 10/4/91			

MT DATA

MT Method Used

☐ Fluorescent ☑ Nonfluorescent ☐ Wet ☑ Dry

MT Unit Serial No. OCQA-88

Particle Batch No. 88J050

MT Technique Used:

Circular

☐ Direct Contact Amp _____

☐ Central Conductor Amp _____

MT Field Indicator Used

☐ Yes ☑ No

☑ Yoke ☑ AC ☐ DC ☐ Prod

☐ Longitudinal Number Turns in Coil _____

Amp _____

PT DATA

PT Batch Number

Cleaner _____

Penetrant _____

Developer _____

Remover _____

☐ Fluorescent ☐ Nonfluorescent

Black Light Intensity Verified

Time _____ Date _____

Serial No. Light Meter _____

Serial No. Black Light _____

Remarks INDICATION IS DIRECTLY ON TOP OF NOZZLE AT THE TOE OF WELD AND NOZZLE BASE. NO OTHER INDICATIONS FOUND.

ANI Review	Date	Final QA Review	Date	Item No.
R F Elgin ANI/ANII	8-26-91	T. J. Coleman	8-26-91	C02.021.001A

Form 26294 (R5-89)

Form NDE-25A	Revision 1

DUKE POWER COMPANY

PROJECT Oconee

MAGNETIC PARTICLE/LIQUID PENETRANT EXAMINATION REPORT

Weld No. 1SGA-WG 23-1 Unit No. 1 Date 9-9-91

Diameter 29.0" Schedule/Thickness 6.625 Type Material SS ☐ CS ☑

Work Order No. 91073194 01 QA Condition 1

Procedure NDE 25BA1 Rev 14

NDE-98 Approved N/A

Radiation Level N/A

Inspector	Level
[signature]	II
[signature]	II

SKETCH OF ITEM EXAMINED

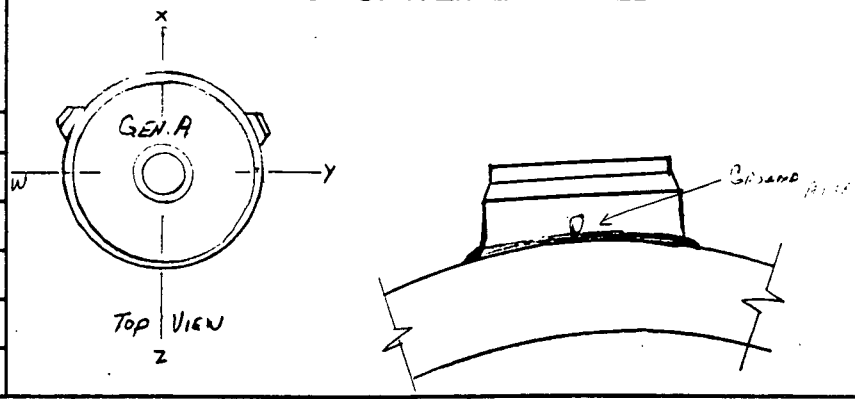

Indication Number	Indication Dimensions Length/Width/Diameter, etc.	Acceptable	Reportable	Reference Documents

MT DATA

MT Method Used

☐ Fluorescent ☑ Nonfluorescent ☐ Wet ☑ Dry

MT Unit Serial No. OC QA-182

Particle Batch No. 87E033

MT Technique Used:

Circular

☐ Direct Contact Amp _____

☐ Central Conductor Amp _____

MT Field Indicator Used

☐ Yes ☑ No

☑ Yoke ☑ AC ☐ DC ☐ Prod

☐ Longitudinal Number Turns in Coil _____

Amp _____

PT DATA

PT Batch Number

Cleaner _____

Penetrant _____

Developer _____

Remover _____

☐ Fluorescent ☐ Nonfluorescent

Black Light Intensity Verified

Time _____ Date _____

Serial No. Light Meter _____

Serial No. Black Light _____

Remarks No RECORDABLE INDICATIONS FOUND AFTER GRINDING. Ref PIR 1-091-0089 & PIR 4-091-0093 [illegible]

ANI Review	Date	Final QA Review	Date	Item No.
R F Elgin	ANI/ANII 9-10-91	T. J. Coleman	9-10-91	C02.021.001A

26254 (R1-82) | Form NDE-40B | Revision 1

DUKE POWER COMPANY

PROJECT Oconee

ULTRASONIC THICKNESS MEASUREMENT REPORT

Item Inspected C02.021.001A Unit 1 Location Gen. A STM Outlet Nozzle

Type Material And Form Plate Nominal Thk. N/A Weld 1SGA-WG 23-1

☑ CS ☐ SS Other ____ Pipe Sch. N/A Dia 29.0" Pump/Valve ☐ Cast ☐ Forged

Instrument USD-10 Serial No. 31501-921

A-Scan ✓ Metered or Digital ✓ Velocity 229 Type Couplant ULTRAGEL

Transducer Size .250 Type DUAL Serial No. E29510 Frequency 2.25 MHZ

Untrasonic Thickness Scanning Technique Used: Spot ✓ Continuous ____

Reference Standard No. IIW1076-83

Reference Standard Point Thickness				Designated Qualification Points		
				Points	Micrometer Serial No.	Micrometer Thickness
1	2	3	4	1		
4.0"	8.0"			2		

SKETCH OF ITEM INSPECTED

Ref Documents NDE 40 Rev. 8

WR # 91073194-01 Rev. ____

PIR-1-091-0089 Rev. ____

____ Rev. ____

____ Rev. ____

Inspection Results LINEAR INDICATION REMOVED PER PIR-1-091-0089 & WR # 91073194-01 WITH LIGHT GRINDING. GROUND AREA MEASURES 1.5" X 1.0".

LOWEST READING AFTER GRINDING 4.55"

AREA AROUND GROUND AREA 4.6"

Inspected By D J Moss S S Bibb Level II II SNT-TC-1A Date 9-9-91

Disposition: ☐ Accept ☐ Reject Acceptance Standard Used N/A

INFORMATION ONLY

By ____ Level ____ SNT-TC-1A Date ____

QA Approval D. L. Bibb Date 9-10-91

Form 26294 (R5-89)

Form NDE-25A	Revision 1

DUKE POWER COMPANY

PROJECT OCONEE

MAGNETIC PARTICLE/LIQUID PENETRANT EXAMINATION REPORT

Weld No. 1-03-3-28B Unit No. 1 Date 8-12-91

Diameter 20.00 Schedule/Thickness 1.031 Type Material SS ☐ CS ☑

Work Order No. N/A QA Condition 1

Procedure NDE 25 B/G Rev 14

NDE-98 Approved _____

Radiation Level _____

Inspector	Level
Jul	II

SKETCH OF ITEM EXAMINED

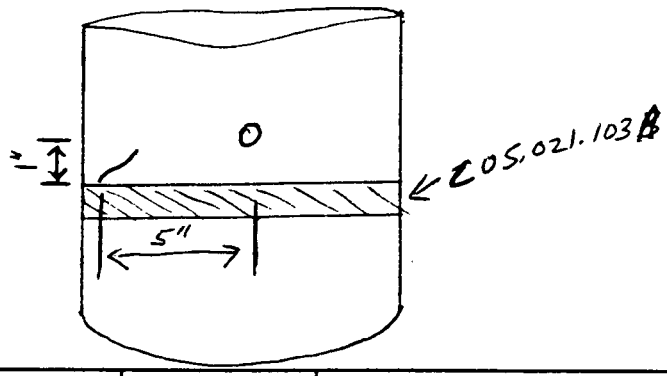

Indication Number	Indication Dimensions Length/Width/Diameter, etc.	Acceptable	Reportable	Reference Documents
*				

MT DATA

MT Method Used

☐ Fluorescent ☑ Nonfluorescent ☐ Wet ☑ Dry

MT Unit Serial No. OCQA-88

Particle Batch No. 88J050

MT Technique Used:

JUL 8-12-91 ~~Circular~~

☑ Direct Contact Amp _____

☐ Central Conductor Amp _____

MT Field Indicator Used

☐ Yes ☑ No

☑ Yoke ☑ AC ☐ DC ☐ Prod

☐ Longitudinal Number Turns in Coil _____

Amp _____

PT DATA

PT Batch Number

Cleaner _____

Penetrant _____

Developer _____

Remover _____

☐ Fluorescent ☐ Nonfluorescent

Black Light Intensity Verified

Time _____ Date _____

Serial No. Light Meter _____

Serial No. Black Light _____

Remarks Indication 1" long in base material 5" from reference mark O. * Ref PIR 1-091-0079

* see Evaluation Report OCN-91-02

ANI Review	Date	Final QA Review	Date	Item No.
A F [signature] ANI/ANII	8-14-91	T. J. Coleman	8-13-91	C05.021.103 A

294 (R5-89)

Form NDE-25A	Revision 1

DUKE POWER COMPANY

PROJECT Oconee

MAGNETIC PARTICLE/LIQUID PENETRANT EXAMINATION REPORT

Weld No. 1-03-3-288 Unit No. 1 Date 8-23-91

Diameter 20.0" Schedule/Thickness 1.031 Type Material SS ☐ CS ☒

Work Order No. 9107054401 QA Condition 1

Procedure NDE 25 B/G / Rev 14

NDE-98 Approved N/A

Radiation Level N/A

Inspector	Level
JJM	II
ADB	II

SKETCH OF ITEM EXAMINED

SEE ORIGINAL M.T. DATA

Indication Number	Indication Dimensions Length/Width/Diameter, etc.	Acceptable	Reportable	Reference Documents

MT DATA

MT Method Used

☐ Fluorescent ☒ Nonfluorescent ☐ Wet ☒ Dry

MT Unit Serial No. OCQA-88

Particle Batch No. 87E033

MT Technique Used:

Circular

☐ Direct Contact Amp _____

☐ Central Conductor Amp _____

MT Field Indicator Used

☐ Yes ☒ No

☒ Yoke ☒ AC ☐ DC ☐ Prod

☐ Longitudinal Number Turns in Coil _____

Amp _____

PT DATA

PT Batch Number

Cleaner _____

Penetrant _____

Developer _____

Remover _____

☐ Fluorescent ☐ Nonfluorescent

Black Light Intensity Verified

Time _____ Date _____

Serial No. Light Meter _____

Serial No. Black Light _____

Remarks AFTER LIGHT FILING, NO RECORDABLE INDICATION FOUND.

ANI Review	Date	Final QA Review	Date	Item No.
R F Ellis	9-17-91		9/17/91	C05.021.103A

26420 (R4-90)

FORM QAL-14A | REVISION 8

DUKE POWER COMPANY

PAGE 1 OF 4

PROJECT Oconee UNIT I

ISI VISUAL EXAMINATION VT-3 AND VT-4 HANGERS SN/31

W.R. # / NSM N/A ☐ PSI ☑ ISI

INSPECTOR	LEVEL	DATE	PROCEDURE	REV.
J. W. Thompson	II	8-19-91	QAL-14	12

ACTUAL SYSTEM TEMPERATURE: N/A

VISUAL METHOD: ☑ DIRECT ☐ REMOTE

SYSTEM STATUS: HOT ☐ COLD ☐ OTHER ☑ (EXPLAIN IN COMMENTS)

VISUAL AIDS/M&TE SN: Flashlight, Tape Measure Mirror

S/R NUMBER	REV.	I.D. NUMBER	ITEM NUMBER
1-54A-0-435B-DE10	2	1-54A-DE010	F1.02.478

RESULTS: ☐ ACCEPTABLE ☑ UNACCEPTABLE, (REQUIRES NDE, EVALUATION OR REPAIR)

IND. NO.	INDICATION TYPE	LENGTH	WIDTH	REMARKS
1	Heavy damage to concrete			See attached sketch sheet 4 of 4
2	CS plate not shown on sketch			See attached sketch sheet 4 of 4

MECHANICAL SHOCK SUPPRESSOR

	A	B
HOT SETTING		
COLD SETTING	N/A	
ACTUAL PISTON SETTING		

MECHANICAL SHOCK SUPPRESSOR

	C	D
HOT SETTING		
COLD SETTING	N/A	
ACTUAL PISTON SETTING		

VARIABLE SPRING SUPPORTS

	A	B
HOT LOAD		
COLD LOAD	N/A	
LOAD IND. READING		

HYDRAULIC SHOCK SUPPRESSOR

	A	B
FLUID LEVEL		
HOT SETTING	N/A	
COLD SETTING		
ACTUAL PISTON SETTING		

CONSTANT SUPPORT

	A	B
HOT LOAD		
COLD LOAD	N/A	
POSITION IND. READING		
TOTAL NO. OF DIV. SCALE		

COMMENTS/DISPOSITION: System Status - Shutdown

Ref VN: OE-4211

PIR: ☑ YES ☐ NO SERIAL NO. 1-091-0083

QA REVIEW T. L. Clemon DATE 9-13-91

ANII REVIEW R. F. Elgin ANII DATE 9-13-91

2 of 4

ITEM NO.	NO. REQ'D	SIZE	DESCRIPTION	ASTM	LOT NUMBER	BY
1	1	W4 x 13 x 2'-5 1/4" LG.		A-36		EXIST
2	2	SIZE 'A', FIG. 211, SWAY STRUT ASSEMBLY,			298-4971F	HC
		OPTION 1, W= 2'-13 1/4" LG.				
3	1	L 3 x 3 x 3/8 x (CUT TO SUIT)		A-36		EXIST
4	1	3/8" x 8" FIG. 137, U-BOLT				
5	1	8" FIG. 162 PROT. SADDLE				
6	1	PL 3/4 x 9 x 0'-9" LG.				
9	2	REAR BRACKET FOR FIG. 211, SIZE A, W/PIN			298-5072F	HC
10	4	3/4"φ Sleeve Anchors (HN-3462)			0261-1096N	FBS

JUN 0 5 90

1624

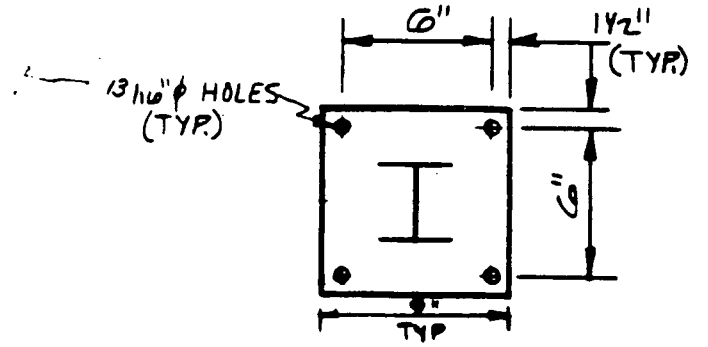

SECT. A-A

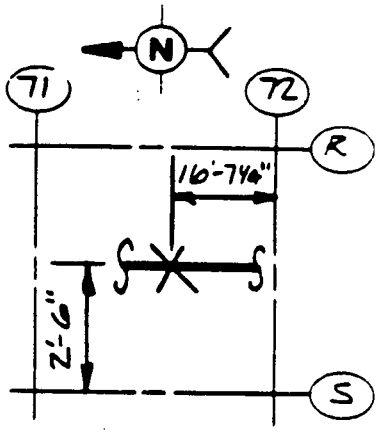

LOCATION PLAN

FOR INSPECTION

F1.02.478 1-54A-DE010

DIRECTION	HOT MVT.	DBE MVT.	HOT LD.	COLD LD.	UPSET	FAULTED	HYDRO
VERTICAL	—	—	1022# ↓	50# ↓	163# ↑ 1235# ↓	376# ↑ 1448# ↓	—
N-S	0.982" N	—	—	—	—	—	—
E-W	0.181" W	—	—	—	—	—	—

ANALYSIS PROBLEM NO. 1-54-02, OSC-415 DATA PT. 4 STRUC. CALC. OSC-0775-02-0004

DESIGNER / DATE U. Kizhakedath 3-11-81 INSPECTED / DATE WAIVED

DRAWN / DATE [signature] 3-11-81 INSPECTED / DATE WAIVED

CHECKED / DATE A.T. Papadopoulos 3-12-81 APPROVED / DATE [signature] 7/17/81

QA CONDITION 1

DUKE POWER COMPANY

PROJECT OCONEE NUCLEAR STATION UNIT 1

REV.	BY	CK	DATE	INSP. CIVIL	DESCRIPTION	APP.	DATE
0	MPK	A.T.P	2-11-81	[signature]	REVISED PER IEB 79-14	[signature]	7/14/81
1	[signature]	JDR	10/16/87	/	Rev. Per IEB 79-14 & VN-OP-420	[signature]	10/16/87
2	[signature]	PCG	5-15-90	/	Re-Built Per IEB 79-14 Impl. Date 3/21/90	[signature]	5/15/90

REFERENCE DRAWINGS

PIPE 0-435B REV. —

CIVIL REV.

ELEC. REV.

H.V.A.C. REV.

SHEET NO. 1 OF 2 REV. 2

MARK NO. 1-54A-0-435B-DE10

JUN 0 5

Sheet 3 of 4

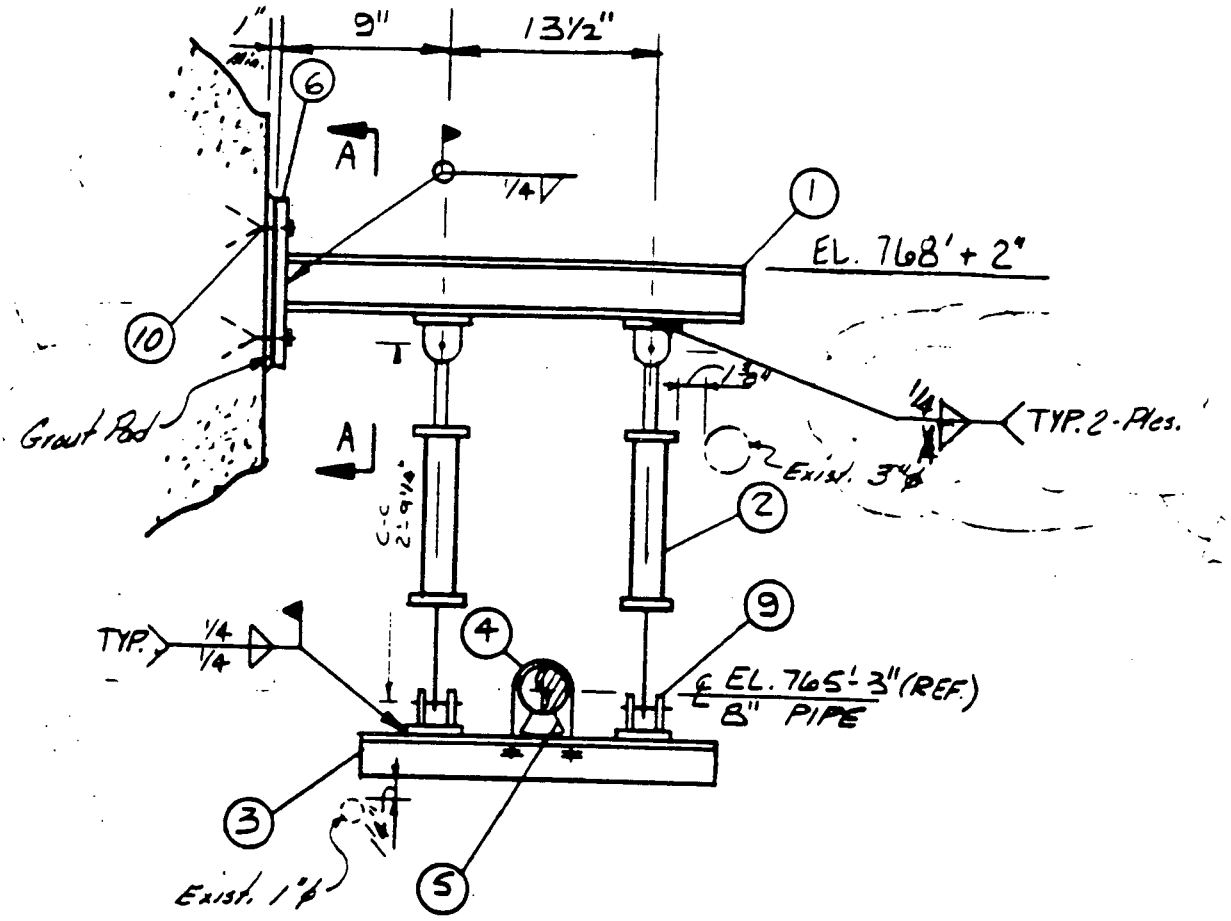

ELEV. LKG. NORTH

DUKE POWER COMPANY	Q A CONDITION 1
PROJECT OCONEE NUCLEAR STA. UNIT 1	SHEET NO. 3 OF 4 REV 3 MARK NO. 1-54A-0-4358-DE10

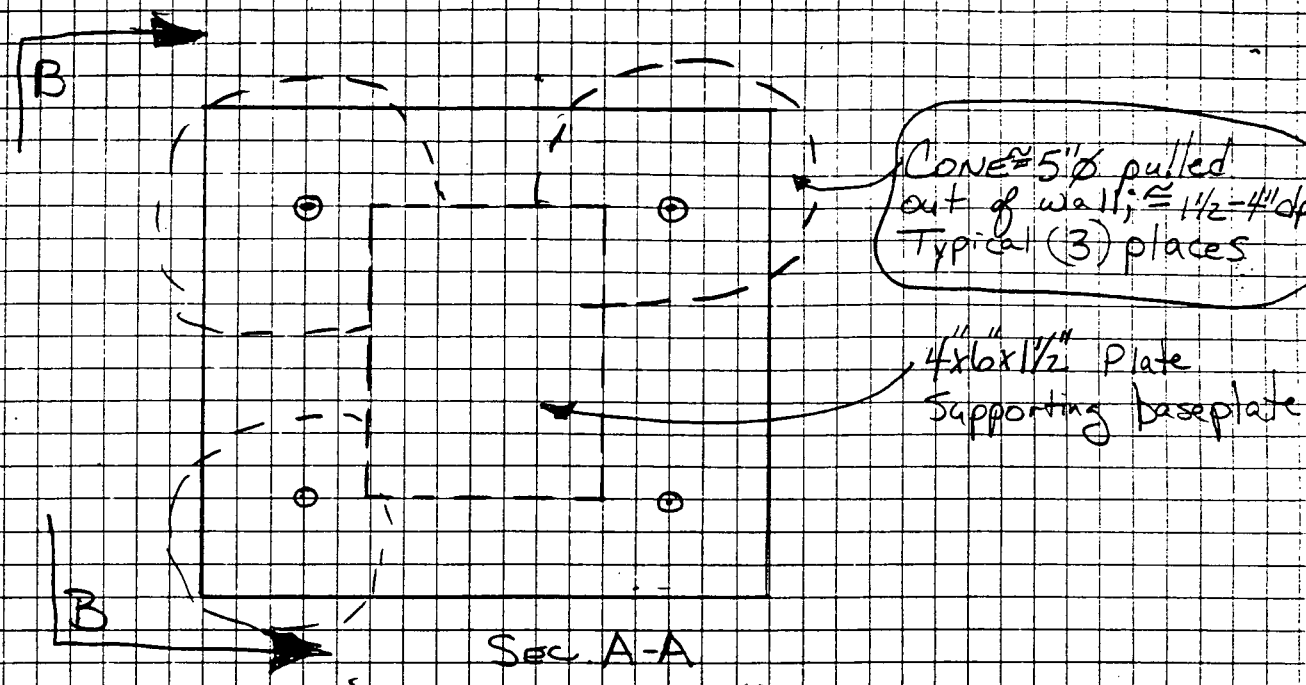
B
Cone ≅ 5" ø pulled out of wall; ≅ 1½-4" dp
Typical (3) places
4"x6"x1½" Plate Supporting baseplate
B
Sec. A-A

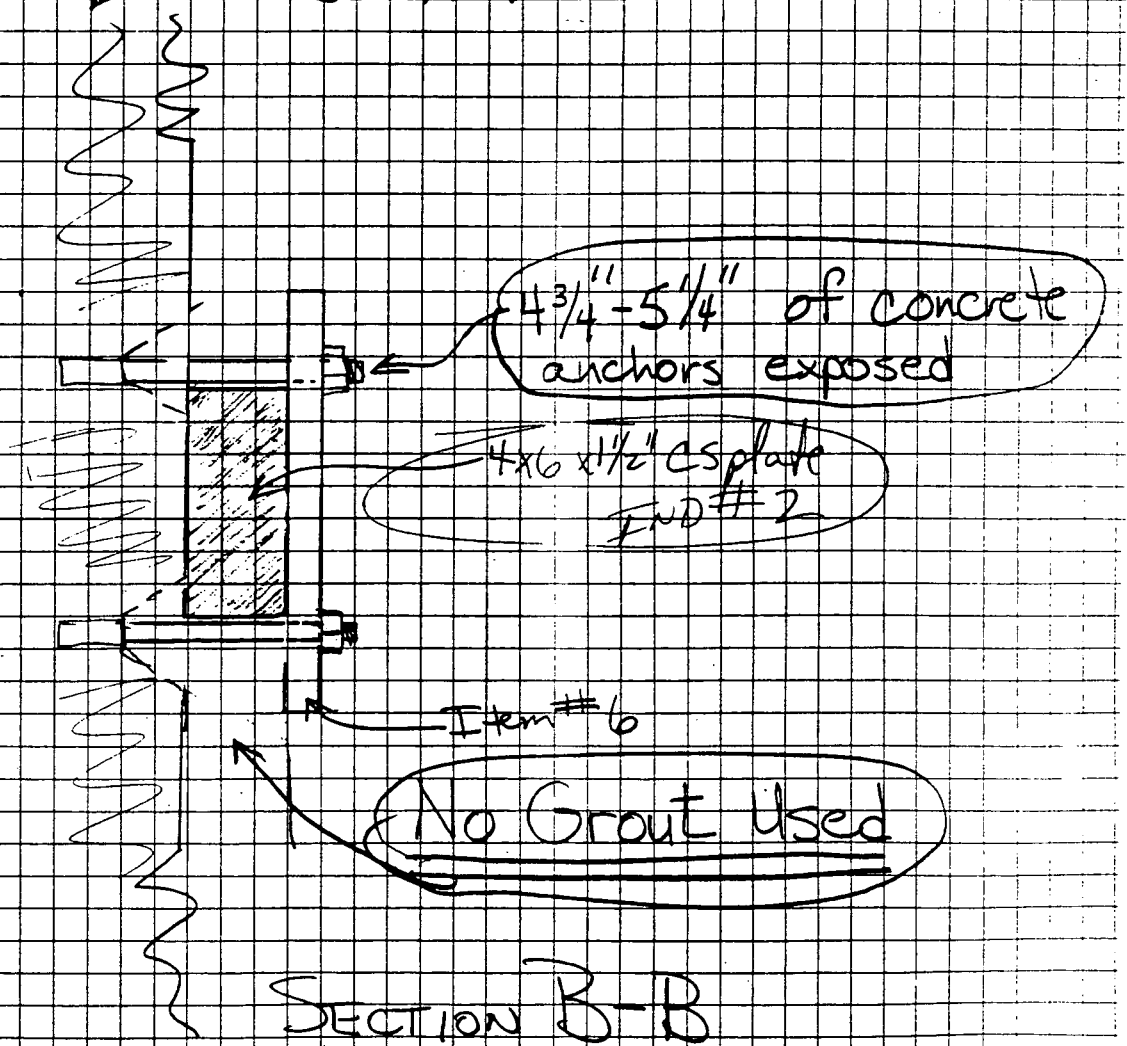
4¾" - 5¼" of concrete anchors exposed
4x6 x1½" cs plate END #2
Item #6
No Grout Used
SECTION B-B

7.0 Augmented Inspection and Alternate Examination Results

Augmented inspections were performed on Reactor Coolant Pumps 1A2, 1B1 and 1B2 Flywheels, Thermal Stress Piping (NRC Bulletin 88-08) and on 1A Auxiliary Feedwater Header (PSC-21-82) Water Hammer Concern.

Alternate examinations were performed on Pressurizer Relief Valve Piping Welds.

7.1 Reactor Coolant Pump Flywheels

Reactor Coolant Pumps 1A2, 1B1 and 1B2 Flywheels received an ultrasonic examination. No reportable indications were found.

7.2 Thermal Stress Piping

Ten (10) welds received an ultrasonic examination as required by NRC Bulletin 88-08. No reportable indications were found.

7.3 Auxiliary Feedwater Header (PSC-21-82) Water Hammer Examinations

Fourteen (14) welds received a magnetic particle examination in accordance with the Auxiliary Feedwater Header (PSC-21-82) Water Hammer Concern. No reportable indications were found.

7.4 Alternate Examination

A dye penetrant examination was performed on piping welds between Pressurizer Relief Valves 1RC-4 and 1 RC-66.

Welds 3 and 4 (ISI Item Numbers E03.001.001 and E03.001.002 respectively) on Duke Power Company Isometric Drawing System 50 ISO 47, located between Pressurizer Relief Valves 1RC-4 and 1RC-66, received a dye penetrant examination, in lieu of the applicable hydrostatic test required specified in ASME Section XI Table IWB-2500-1 Category B-P. These examinations were performed in accordance with the Inservice Inspection Program, Request for Relief ONS-005, submitted to the Nuclear Regulatory Commission. A copy of the request for relief is included in Section 10 of this report. A copy of the inspection data sheets is included in this section of the report.

No reportable indications were found.

Form 26294 (R5-89)

Form NDE-25A	Revision 1

DUKE POWER COMPANY

PROJECT OCONEE

MAGNETIC PARTICLE/LIQUID PENETRANT EXAMINATION REPORT

Weld No. 1-50-47-3 Unit No. 1 Date 8-24-91

Diameter 3.50 Schedule/Thickness .438 Type Material SS ☒ CS ☐

Work Order No. N/A QA Condition /

Procedure NDE-35 A-F / Rev 13

NDE-98 Approved N/A

Radiation Level N/A

Inspector	Level
RPB	II
CHM	II

SKETCH OF ITEM EXAMINED

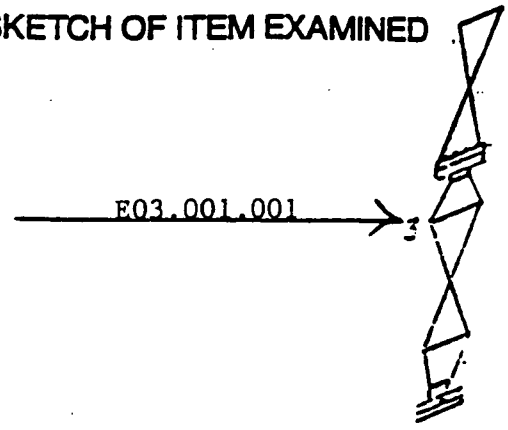

Indication Number	Indication Dimensions Length/Width/Diameter, etc.	Acceptable	Reportable	Reference Documents

MT DATA

MT Method Used

☐ Fluorescent ☐ Nonfluorescent ☐ Wet ☐ Dry

MT Unit Serial No. _____

Particle Batch No. _____

MT Technique Used:

Circular

☐ Direct Contact Amp _____

☐ Central Conductor Amp _____

MT Field Indicator Used

☐ Yes ☐ No

☐ Yoke ☐ AC ☐ DC ☐ Prod

☐ Longitudinal Number Turns in Coil _____

Amp _____

PT DATA

PT Batch Number

Cleaner 90F036

Penetrant 87K043

Developer 89B05K

Remover _____

☐ Fluorescent XXX Nonfluorescent

Black Light Intensity Verified

Time _____ Date _____

Serial No. Light Meter _____

Serial No. Black Light _____

Remarks NO RECORDABLE INDICATIONS FOUND.

ANI Review	Date	Final QA Review	Date	Item No.
R F Elgin ANII/ANII	8-31-91	T. J. Coleman	8-30-91	E03.001.001

Form 26294 (R5-89)

Form NDE-25A	Revision 1

DUKE POWER COMPANY

PROJECT OCONEE

MAGNETIC PARTICLE/LIQUID PENETRANT EXAMINATION REPORT

Weld No. 1-50-47-4 Unit No. 1 Date 8-24-91

Diameter 2.90 Schedule/Thickness .375 Type Material SS ☒ CS ☐

Work Order No. N/A QA Condition /

Procedure NDE-35 A-F / Rev 13

NDE-98 Approved N/A

Radiation Level N/A

Inspector	Level
R F B	II
C H M	II

SKETCH OF ITEM EXAMINED

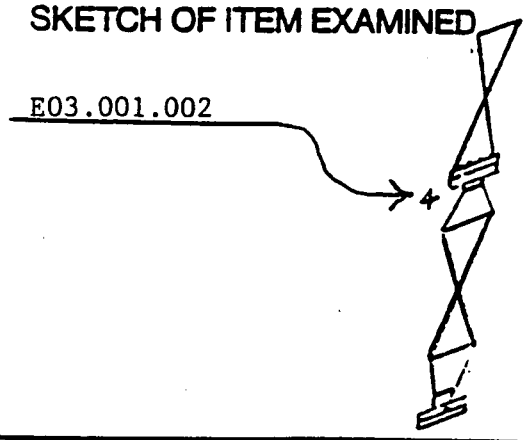

Indication Number	Indication Dimensions Length/Width/Diameter, etc.	Acceptable	Reportable	Reference Documents

MT DATA

MT Method Used

☐ Fluorescent ☐ Nonfluorescent ☐ Wet ☐ Dry

MT Unit Serial No. _____

Particle Batch No. _____

MT Technique Used:

Circular

☐ Direct Contact Amp _____

☐ Central Conductor Amp _____

MT Field Indicator Used

☐ Yes ☐ No

☐ Yoke ☐ AC ☐ DC ☐ Prod

☐ Longitudinal Number Turns in Coil _____

Amp _____

PT DATA

PT Batch Number

Cleaner 90F036

Penetrant 87K043

Developer 89B05K

Remover _____

☐ Fluorescent ☒ Nonfluorescent

Black Light Intensity Verified

Time _____ Date _____

Serial No. Light Meter _____

Serial No. Black Light _____

Remarks NO RECORDABLE INDICATIONS FOUND.

ANI Review	Date	Final QA Review	Date	Item No.
R F Elgin ANI	8-31-9	T. J. Coleman	8-30-91	E03.001.002

8.0 Personnel, Equipment and Material Certifications

All personnel who performed or evaluated the results of inservice inspections from June 4, 1990 to September 26, 1991 at Oconee 1 were certified in accordance with the requirements of 1980 Edition of ASME Section XI with Addenda through Winter 1980. The appropriate certification records for each Duke Power Company inspector is on file at Oconee Nuclear Station or in the Corporate Offices in Charlotte, North Carolina. The certification records for the Babcock & Wilcox inspectors are on file at the Babcock & Wilcox Offices in Lynchburg, Virginia.

All Babcock and Wilcox personnel who performed or evaluated results of inservice inspections during Outage 13 on the Reactor Vessel Outlet Nozzle Intermediate examinations were additionally certified to the ASME Section XI 1989 Edition, Appendix VII.

Records of periodic calibration of Babcock & Wilcox inspection equipment are on file at the Babcock and Wilcox Offices in Lynchburg, Virginia. Records of periodic calibration of Duke Power Company inspection equipment are on file at Oconee Nuclear Station or in the Corporate Offices in Charlotte, North Carolina.

9.0 Problem Investigation Reports

A copy of each Problem Investigation Report resulting from reportable items, originated against scheduled inservice inspections performed during Outage 13, is included in this section. All were resolved and found acceptable by Duke Power's Quality Assurance Department before returning Unit 1 to service. The following Problem Investigation Reports were issued:

P.I.R. NO.	DESCRIPTION	DATE ISSUED
1-091-0079	Class 2 Piping Weld 1-03-3.1-28B Linear Indication	08-12-91
1-091-0083	Class 2 Component Support 1-54A-0-435B-DE10 Reportable Item	08-22-91
1-091-0085	Class 1 Piping Weld 1PIB1-5 Weld Indication	08-26-91
1-091-0089	Steam Generator 1A	09-04-91
4-091-0093	Class 2 Nozzle 1SGA-WG23-1 Linear Indication	09-09-91

Form 35372 (R6-89)

COMPLETE FORM BY PRINTING WITH BLACK BALL POINT PEN OR TYPE

DUKE POWER COMPANY
NUCLEAR STATION

Problem Investigation Report Serial No. 1-091-0079
Station Oconee
Licensee Event Report No. _____

I. Problem Occurred-Time/Date: UNKNOWN Discovered-Time/Date: 1500/8-12-91
Unit(s): 1 Unit Status At Time Problem Occurred/Discovered: Refueling Outage
Description and Cause of Problem: During Magnetic Particle Examination on ISI Item # C05.021.103A Weld # 1-03-3.1-28B a transverse linear indication extending from the toe of the weld at a 45° angle ~ 1.00" long was reported.

Other Duke Stations Affected ☐ Yes ☑ No Determined By/Date: T.J. Coleman 8-12-91
Comments: _____

Location of Problem: Unit 1 Rx Bldg. FWD Header in "A" Cavity @ Elev. 828'-6"
Method Used to Discover Problem: Magnetic Particle Examination (NDE-25)
Immediate Corrective Actions Taken/To Be Taken: None

Work Stoppage Notification (Form QCK-2A) Serial No.: N/A
Information Sources/References (Work Requests, Documents Violated, etc.): NDE 25 ASME Sec. XI

Originated By: T.J. Coleman Date: 8-12-91 Dept./Group/Section: QA Tech. Support

II. **Compliance Evaluation**-Item/System Operable ☑ Yes ☐ No ☐ Not Applicable
Evaluated By/Date: Rick Matheson 8/19/91 Comments: Past Operability by Design
Reportable ☐ Yes ☑ No Reportable Per: ☐ 50.73 Section _____ ☐ 50.72 Section _____
☐ 73.71 Section ☐ T.S./Lic Cond Section _____ ☐ Part 21 ☐ Other: _____ ☐ Part 50.9
Evaluated By/Date: Rick Matheson 8/19/91 Comments: Determined by Operability

III. Telecon/ENS Report to NRC Time/Date: _____
NRC Contactee(s): _____ DPC Contactor(s): _____
Telegraph/Mailgram/Facsimile Transmission to NRC-Date: _____
Date Notified: NRC Res. Inspector: _____ Station Manager: _____
General Office: _____ Comments: _____

IV. Investigation Assigned To: _____ NRC Report Due Date: _____
Date Due to Compliance after Evaluation: _____
PIR Review (Compliance): _____ Date: _____
PIR Station Manager Approval: _____ Date: _____

V. Further Action/Evaluation Required ☑ Yes ☐ No (Explain Below):
Page 2 Assigned To: QA & Design
Comments: _____

Compliance Review: Rick Matheson Date: 9/16/91 QA Review: T.J. Coleman Date: 8-26-91

Distribution

Initial	Originator	Supt (4)	R. Elgin	B Barron	J. McClure	Mike Williams	B. Dolan / CA Robinson
8-12-91	T.J. Coleman	H Lowery	R Henderson	P Harmon	S Crews	S Benesole	QA Tech Serv.
Final	**Originator**	**Supt (4)**	**P. Harmon**	**J McClure**	**R Elgin**	**S Crews**	**L Fuervaugh**
9-30-91	T.J. Coleman	H Lowery	B Barron	R Rouse	R Henderson	B Dolan	S Benesole
						P. Abraham	QA Tech Serv.

RSM 8/12/91 G Lavaux R Rouse B Dolan C. Boyd M Sills

Form 35387 (R6-89)

PROBLEM INVESTIGATION REPORT

PIR No. 1-091-0079

VI. Proposed Resolution of Problem Examine additional welds in accordance with ASME Section XI paragraph IWC 2430 (a).

Other Approved _____ Date

Other Approved _____ Date

SCAE Required ☐ Yes ☑ No

SCAE Assigned To N/A

Approved T.J. Coleman 8-20-91 Date

Approved _____ QA Date

Determined By/Date _____ QA Date

Serial No. N/A

Remarks All Required considerations were not applicable TJC 8-26-91

VII. QA Verification Requirements Verify additional welds were examined in accordance with ASME Section XI paragraph IWC 2430(a)

Assigned To QA Tech. Support 8-26-91 Date

VIII. Corrective Action Completed Additional welds were examined.

Approved T.J. Coleman 9-12-91 Date

IX. QA Verification Results Verified additional welds were examined in accordance with ASME Section XI and found acceptable

Completed By T.J. Coleman 9-12-91 Date QA Approval [signature] 9.12.91 Date

Remarks _____

Final QA Review [signature] 9.12.91 Date

Form 35387 (R6-89)

PROBLEM INVESTIGATION REPORT

Page 2
PIR No. 1-091-0079

VI. Proposed Resolution of Problem Design Engineering judges this to be a manufacturing defect. Resolve as follows:
1. Grind out indication.
2. Perform MT to assure complete removal of indication.
3. Estimate size and orientation of the indication and forward this information to Design Engineering for record purposes.
4. Check remaining pipe wall thickness.
5. If ground area encroaches on pipe minimum wall thickness, perform appropriate weld repair and NDE.

R. L. Williams 8/21/91
By Date

Other Approved RA Davis 8/21/91 Date
Approved T. D. Curtis RSM 8/21/91 Date

Other Approved _____ Date
Approved T. J. Coleman 8-26-9 QA Date

SCAE Required ☐ Yes ☑ No
Determined By/Date TJ Coleman 8-26-91 QA Date

SCAE Assigned To: _____
Serial No. _____

Remarks All Required considerations were not applicable TJC 8-26-91

VII. QA Verification Requirements Verify all proposed resolution items are accomplished where applicable.

Assigned To QA Tech. Support 8-26-91 Date

VIII. Corrective Action Completed indication was removed by filing & MT was performed to assure removal, estimated size and orientation of the indication was forwarded to Design Engineering. Wall thickness was verified to be above minimum wall so no weld repair was need.

Approved T. J. Coleman 9-10-91 Date

IX. QA Verification Results Verified all proposed resolution items were accomplished

Completed By T. J. Coleman 9-10-91 Date
QA Approval [signature] 9-12-91 Date

Remarks _____

Final QA Review T. J. Coleman 9-12-91 Date

Form 26294 (R5-89)

Form NDE-25A	Revision 1

DUKE POWER COMPANY

PROJECT OCONEE

MAGNETIC PARTICLE/LIQUID PENETRANT EXAMINATION REPORT

Weld No. 1-03-3-28B Unit No. 1 Date 8-12-91

Diameter 30.00 Schedule/Thickness 1.031 Type Material SS ☐ CS ☑

Work Order No. _____ QA Condition _____

Procedure NDE 25 B/C Rev 14

NDE-98 Approved _____

Radiation Level _____

Inspector	Level
Jak	II

SKETCH OF ITEM EXAMINED

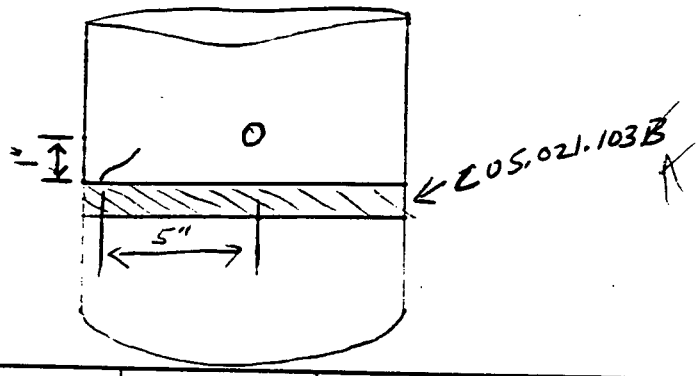

Indication Number	Indication Dimensions Length/Width/Diameter, etc.	Acceptable	Reportable	Reference Documents

MT DATA

MT Method Used

☐ Fluorescent ☑ Nonfluorescent ☐ Wet ☑ Dry

MT Unit Serial No. OCQA-38

Particle Batch No. 88J050

MT Technique Used:

Circular

☑ Direct Contact Amp _____

☐ Central Conductor Amp _____

MT Field Indicator Used

☐ Yes ☑ No

☑ Yoke ☑ AC ☐ DC ☐ Prod

☐ Longitudinal Number Turns in Coil _____

Amp _____

PT DATA

PT Batch Number

Cleaner _____

Penetrant _____

Developer _____

Remover _____

☐ Fluorescent ☐ Nonfluorescent

Black Light Intensity Verified

Time _____ Date _____

Serial No. Light Meter _____

Serial No. Black Light _____

Remarks Indication 1" long in base material 5" from reference mark O.

ANI Review	Date	Final QA Review	Date	Item No.
				COS.021.103A

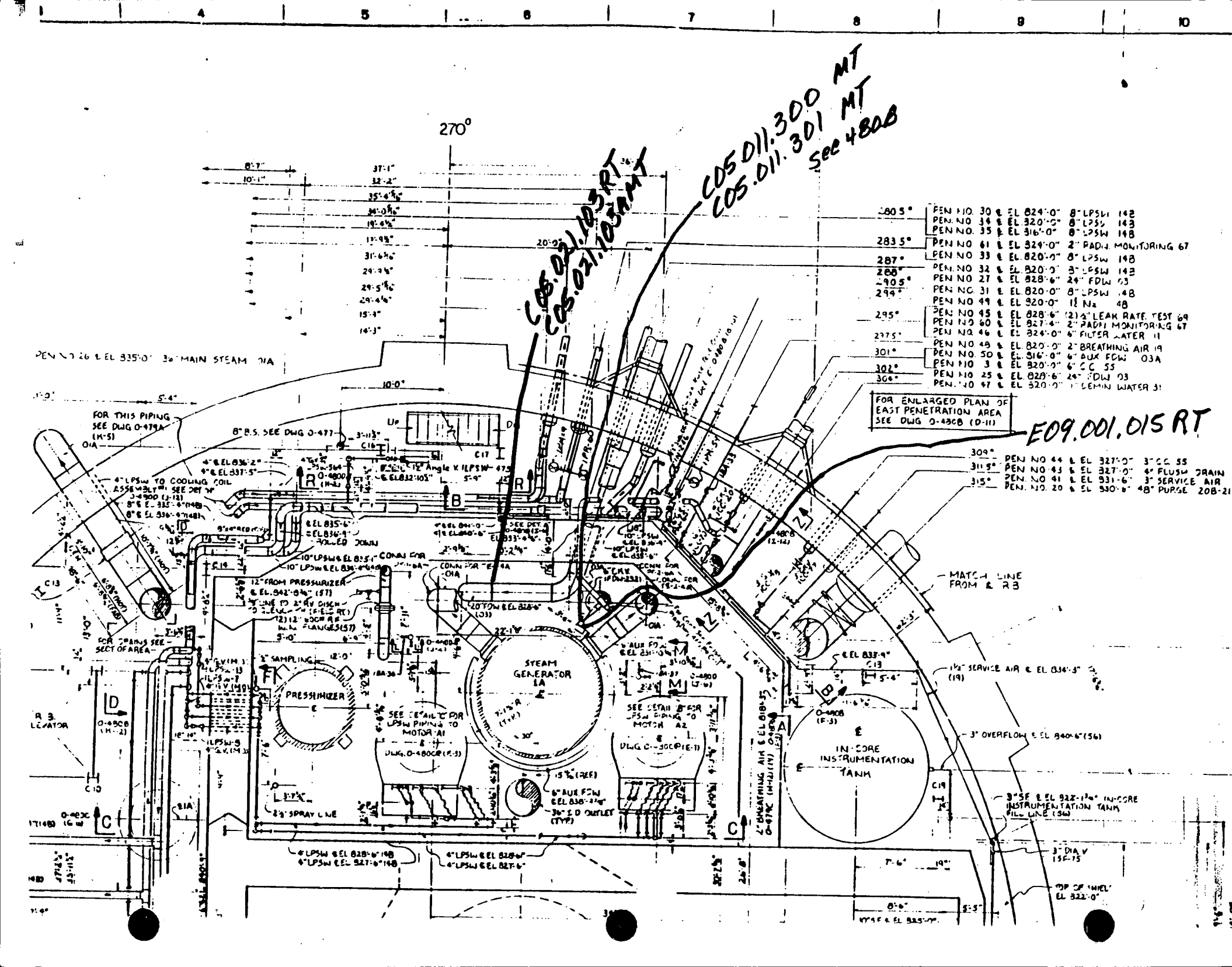

270°
C05.021.103RT
C05.021.103AMT
C05.011.300 MT
C05.011.301 MT
See 480B
E09.001.015 RT
PEN NO. 30 & EL 824'-0" 8" LPSW 14B
PEN NO. 34 & EL 820'-0" 8" LPSW 14B
PEN NO. 35 & EL 816'-0" 8" LPSW 14B
PEN NO 61 & EL 824'-0" 2" RADN. MONITORING 67
PEN NO 33 & EL 820'-0" 8" LPSW 14B
PEN NO 32 & EL 820'-0" 8" LPSW 14B
PEN NO 27 & EL 828'-6" 24" FDW 03
PEN NO. 31 & EL 820'-0" 8" LPSW 14B
PEN NO 49 & EL 820'-0" 1½ N2 48
PEN NO 45 & EL 828'-6" (2) ¼" LEAK RATE TEST 69
PEN NO 60 & EL 827'-4" 2" RADN MONITORING 67
PEN NO 46 & EL 824'-0" 6" FILTER WATER 11
PEN NO 48 & EL 820'-0" 2" BREATHING AIR 19
PEN NO. 50 & EL 816'-0" 6" AUX FDW 03A
PEN NO 3 & EL 820'-0" 6" C.C. 55
PEN NO 25 & EL 828'-6" 24" FDW 03
PEN NO 47 & EL 820'-0" 1" DEMIN WATER 31
FOR ENLARGED PLAN OF EAST PENETRATION AREA SEE DWG 0-480B (D-11)
PEN NO 44 & EL 827'-0" 3" C.C. 55
PEN NO 43 & EL 827'-0" 4" FLUSH DRAIN
PEN NO 41 & EL 831'-6" 3" SERVICE AIR
PEN NO. 20 & EL 830'-6" 48" PURGE 20B-21
MATCH LINE FROM & R3
PEN NO 26 & EL 835'-0" 36" MAIN STEAM 01A
FOR THIS PIPING SEE DWG 0-479A (K-5)
8" B.S. SEE DWG 0-477
4" LPSW TO COOLING COIL ASSEMBLY SEE DET 'H'
12" FROM PRESSURIZER
FOR DRAINS SEE SECT OF AREA
PRESSURIZER
STEAM GENERATOR 1A
SEE DETAIL 'C' FOR LPSW PIPING TO MOTOR A1
SEE DETAIL 'B' FOR LPSW PIPING TO MOTOR A2
IN-CORE INSTRUMENTATION TANK
1½" SERVICE AIR & EL 834'-3" (19)
3" OVERFLOW & EL 840'-6" (56)
3" SF & EL 822'-1¾" IN-CORE INSTRUMENTATION TANK FILL LINE (56)
3" DIA V 15F-75
TOP OF SHIELD EL 822'-0"
R.B. LEVATOR

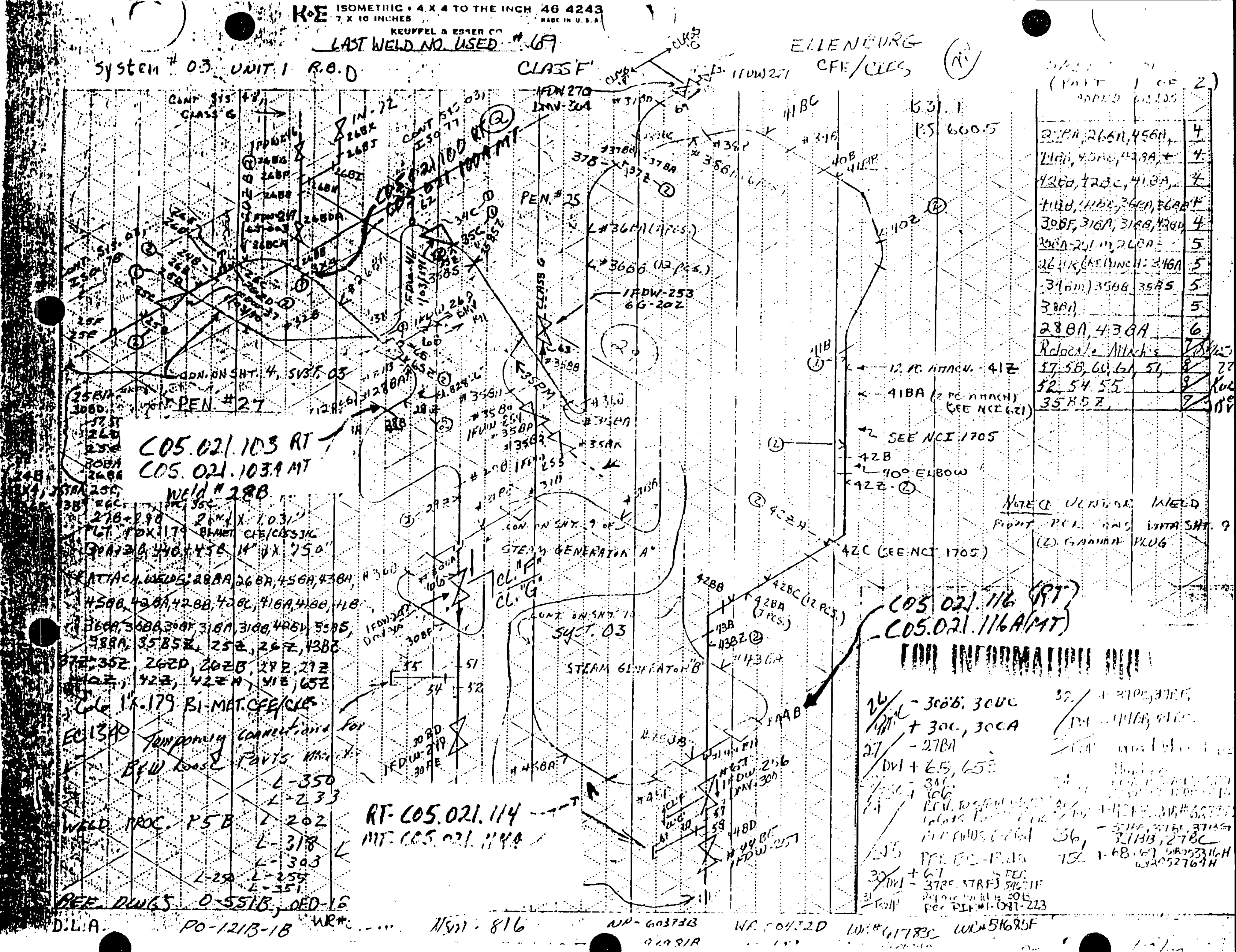
K+E ISOMETRIC • 4 X 4 TO THE INCH 46 4243
7 X 10 INCHES
KEUFFEL & ESSER CO.
MADE IN U.S.A.
LAST WELD NO. USED #69
System # 03 UNIT 1 R.B.D
CLASS F
ELLENBURG
CFE/CLCS
B31.1
P.S. 600.5
PEN. #25
PEN #27
C05.021.100 RT
C05.021.100A MT
C05.021.103 RT
C05.021.103A MT
Weld # 28B
1FDW-270
1FDW-253
6G-202
CLASS G
CON. ON SHT. 4, SYST. 03
STEAM GENERATOR "A"
STEAM GENERATOR "B"
SYST. 03
CL. "F"
CL. "G"
1FDW-219
1FDW-256
1FDW-257
41BA (2 PC ATTACH) SEE NCI 621
SEE NCI 1705
42B
40° ELBOW
42C (SEE NCI 1705)
42BC (12 PCS.)
42BA (7 PCS.)
C05.021.116 RT
C05.021.116A MT
RT-C05.021.114
MT-C05.021.114A
ATTACH WELDS: 28BA, 26BA, 45GA, 43BA,
1" X .179 BI-MET CFE/CLCS
EC 1380 Temporary connections for BFW Loose Parts
L-350
L-233
L-202
L-318
L-303
L-250 L-255
L-351
WELD PROC. P5B
REF. DWGS 0-551B, OED-16
D.L.A.
PO-1213-1B
NSM-816
NR-603738
WR 60432D
WR#61783C
WR#51685F
28BA, 43BA
Relocate Attach's
57, 58, 60, 61, 51,
52, 54, 55
35BSZ
NOTE ① VENDOR WELD
② GAMMA PLUG
FOR INFORMATION ONLY

Form 35372 (R6-89)

COMPLETE FORM BY PRINTING WITH BLACK BALL POINT PEN OR TYPE

DUKE POWER COMPANY
NUCLEAR STATION

Problem Investigation Report Serial No. 1-091-0083
Station OCONEE
Licensee Event Report No. _____

I. Problem Occurred-Time/Date: Unknown Discovered-Time/Date: 8-19-91 @ 1300
Unit(s): 1 Unit Status At Time Problem Occurred/Discovered: RFO
Description and Cause of Problem: SR # 1-54A-0-435B-DE10 does not have a grout pad behind the base plate as shown on the sketch. The concrete is cracked around 3 of the four anchor bolts. (See attached ISI Report)

Other Duke Stations Affected ☐ Yes ☒ No Determined By/Date: Jackie W. Dowley 8-22-91
Comments: _____

Location of Problem: HPI Room
Method Used to Discover Problem: ISI during RFO
Immediate Corrective Actions Taken/To Be Taken: None

Work Stoppage Notification (Form QCK-2A) Serial No.: NA
Information Sources/References (Work Requests, Documents Violated, etc.): _____

Originated By: Jackie W. Dowley Date: 8-22-91 Dept./Group/Section: NPD-MES

II. **Compliance Evaluation**-Item/System Operable ☒ Yes ☐ No ☐ Not Applicable
Evaluated By/Date: Rick Mathson 10/2/91 Comments: Operability by Design
Reportable ☐ Yes ☒ No Reportable Per: ☐ 50.73 Section _____ ☐ 50.72 Section _____
☐ 73.71 Section ☐ T.S./Lic Cond Section _____ ☐ Part 21 ☐ Other: _____ ☐ Part 50.9
Evaluated By/Date: Rick Mathson 10/2/91 Comments: Determined by Operability

III. Telecon/ENS Report to NRC Time/Date: _____
NRC Contactee(s): _____ DPC Contactor(s): _____
Telegraph/Mailgram/Facsimile Transmission to NRC-Date: _____
Date Notified: NRC Res. Inspector: _____ Station Manager: _____
General Office: _____ Comments: _____

IV. Investigation Assigned To: _____ NRC Report Due Date: _____
Date Due to Compliance after Evaluation: _____
PIR Review (Compliance): _____ Date: _____
PIR Station Manager Approval: _____ Date: _____

V. Further Action/Evaluation Required ☒ Yes ☐ No (Explain Below):
Page 2 Assigned To: Design
Comments: _____

Compliance Review: Rick Mathson Date: ~~10/1/91~~ 10/2/91 QA Review: Wm McClure Date: 9/19/91

Distribution RS 8/29/91 R. Childs B Dolan S Crews B Dobson K. Ryzse C Bott

Initial	Originator	Supt (4)	P Harmon	R Elgin	D Benoit	L Rudolph	D Larson
8-21-91	L Lessley	J Dowley	B Barron	R Henderson	G Jackson	C A Robinson	M Sills
Final	Originator	Supt (4P)	P Harmon	R Elgin	D Benoit	L Rudolph	S Crews
10-3-91	L Lessley	J Dowley	B Barron	R Henderson	G Jackson	T Niraulon	B Dolan
						Ron Cole	B Hollbaugh

Form 36387 (R10-88)

PROBLEM INVESTIGATION REPORT

VI. Proposed Resolution of Problem

This support should be removed and the concrete repaired per station procedure. The support should then be reinstalled per Rev. 2 of the sketch with the following exceptions.

1) The grout pad and the existing PL1½"x4"x6" located behind the baseplate should be removed.

2) If necessary, the upper rear brackets should be removed and reinstalled such that they line up with the lower rear brackets.

3) The 9" dim. from the back of the baseplate to the West rear bracket should be 1'-0" max.

Other Approved [signature] Date 8/28/91

Other Approved [signature] Date 8/28/91

Approved T. Curtis/RSM Date 8/27/91

Approved WTMcClure Date 8/28/91

SCAE Required ☑ Yes ☐ No

Determined By/Date (QA) WTMcClure 8/28/91

SCAE Assigned To: Design

Serial No. ONS-159

Remarks

VII. QA Verification Requirements VERIFY REQUIRED QA INSPECTIONS PERFORMED AND DOCUMENTED FOR ACTIONS REQUIRED BY SECTION VI.

Assigned To QA TECHNICAL SUPPORT 8/28/91 Date

VIII. Corrective Action Completed The Support/restraint repaired per design Engineering approved Sketch by exempt change OE-4211

Approved [signature] Date 9/12/91

IX. QA Verification Results REVIEWED OE-4211 FOR APPLICABLE QA INSPECTIONS ON 9/16/91 AND ACCEPTED PACKAGE.

Completed By WTMcClure 9/19/91 Date

QA Approval [signature] Date 9/19/91

Remarks

Final QA Review [signature] 9/19/91 Date

25428 (R4-90)

FORM QAL-14A	REVISION 8

DUKE POWER COMPANY PAGE 1 OF 4

PROJECT Oconee UNIT 1

ISI VISUAL EXAMINATION VT-3 AND VT-4 HANGERS

SN/31

W.R. # / NSM N/A ☐ PSI ☑ ISI

INSPECTOR	LEVEL	DATE	PROCEDURE	REV.
J.W. Thompson	II	8-19-91	QAL-14	2

ACTUAL SYSTEM TEMPERATURE: N/A

VISUAL METHOD: ☑ DIRECT ☐ REMOTE

SYSTEM STATUS: HOT ☐ COLD ☐ OTHER ☑ (EXPLAIN IN COMMENTS)

VISUAL AIDS/M&TE SN: Flashlight, Tape Measure Mirror

S/R NUMBER	REV.	I.D. NUMBER	ITEM NUMBER
1-54A-0-435B-DE10	2	1-54A-DE010	F1.02.478

RESULTS: ☐ ACCEPTABLE ☑ UNACCEPTABLE, (REQUIRES NDE, EVALUATION OR REPAIR)

IND. NO.	INDICATION TYPE	LENGTH	WIDTH	REMARKS
1	Heavy damage to concrete			See attached sketch sheet 4 of 4
2	CS plate not shown on sketch			See attached sketch sheet 4 of 4

MECHANICAL SHOCK SUPPRESSOR

	A	B
HOT SETTING		
COLD SETTING	N/A	
ACTUAL PISTON SETTING		

MECHANICAL SHOCK SUPPRESSOR

	C	D
HOT SETTING		
COLD SETTING	N/A	
ACTUAL PISTON SETTING		

VARIABLE SPRING SUPPORTS

	A	B
HOT LOAD		
COLD LOAD	N/A	
LOAD IND. READING		

HYDRAULIC SHOCK SUPPRESSOR

	A	B
FLUID LEVEL		
HOT SETTING	N/A	
COLD SETTING		
ACTUAL PISTON SETTING		

CONSTANT SUPPORT

	A	B
HOT LOAD		
COLD LOAD	N/A	
POSITION IND. READING		
TOTAL NO. OF DIV. SCALE		

COMMENTS/DISPOSITION: System status - shutdown

PIR: ☐ YES ☐ NO SERIAL NO.

QA REVIEW	DATE	ANII REVIEW	DATE

ITEM NO.	NO. REQ'D	SIZE	DESCRIPTION	ASTM	LOT NUMBER	BY
1	1	W4 x 13 x 2'-5 1/4" LG.		A-36		EXIST
2	2	SIZE 'A', FIG. 211, SWAY STRUT ASSEMBLY,			298-4971F	HC
		OPTION 1, W= 2'-1 3/4" LG.				
3	1	L3 x 3 x 3/8 x (CUT TO SUIT)		A-36		EXIST
4	1	5/8" x 8" FIG. 137, U-BOLT				
5	1	8" FIG. 162, PROT. SADDLE				
6	1	PL 3/4 x 9 x 0'-9" LG.				
9	2	REAR BRACKET FOR FIG. 211, SIZE A, W/PIN			298-5072F	HC
10	4	3/4"φ Sleeve Anchors (HN-3462)			0261-1096N	FBS

JUN 0 5 90

1624

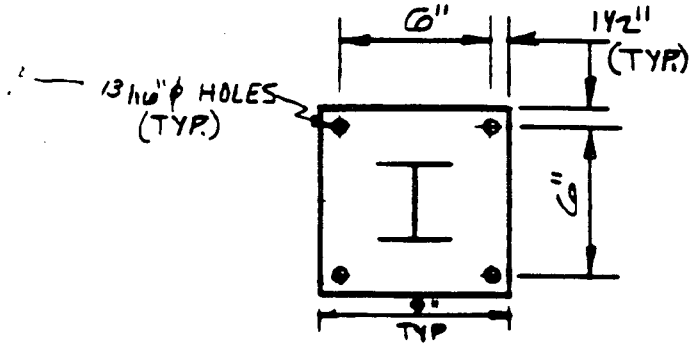

SECT. A-A

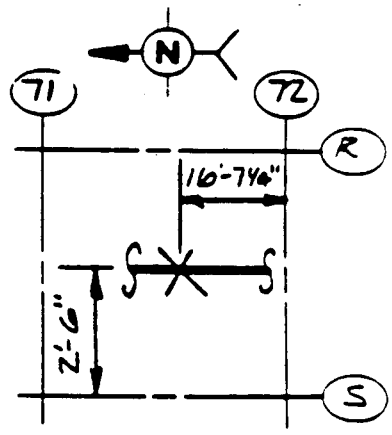

LOCATION PLAN

FI.02.478 1-54A-DE010

DIRECTION	HOT MVT.	DBE MVT.	HOT LD.	COLD LD.	UPSET	FAULTED	HYDRO
VERTICAL	—	—	1022# ↓	50# ↓	163# ↑ / 1235# ↓	376# ↑ / 1448# ↓	—
N-S	0.982" N	—	—	—	—	—	—
E-W	0.181" W	—	—	—	—	—	—

ANALYSIS PROBLEM NO. 1-54-08-OSC-415 DATA PT. 4 STRUC. CALC. OSC-0975-02-0004

DESIGNER / DATE U. Kizhakedath 3-11-81 INSPECTED / DATE WAIVED
DRAWN / DATE [signature] 3-11-81 INSPECTED / DATE WAIVED
CHECKED / DATE A.T. Papadopoulos 3-12-81 APPROVED / DATE [signature] 7-7-81

QA CONDITION 1

DUKE POWER COMPANY

PROJECT OCONEE NUCLEAR STATION UNIT 1

REV.	BY	CK	DATE	INSP. CIVIL	DESCRIPTION	APP.	DATE
0	MPK	A.T.P	2-11-81	[illegible]	REVISED PER IEB 79-14	[illegible]	7/14/81
1	[illegible]	JDR	10/16/87	/	Rev. Per IEB 79-14 & VN-OP-420	[illegible]	10/16/87
2	[illegible]	PCG	5-15-90	/	Re-Built Per IEB 79-14 Impl. Date 3/21/90	[illegible]	5/15/90

REFERENCE DRAWINGS

PIPE 0-435B REV. —
CIVIL REV.
ELEC. REV.
H.V.A.C. REV.

SHEET NO. 1 OF 2 REV. 2
MARK NO. 1-54A-0-435B-DE10

JUN 0 5

Sheet 3 of 4

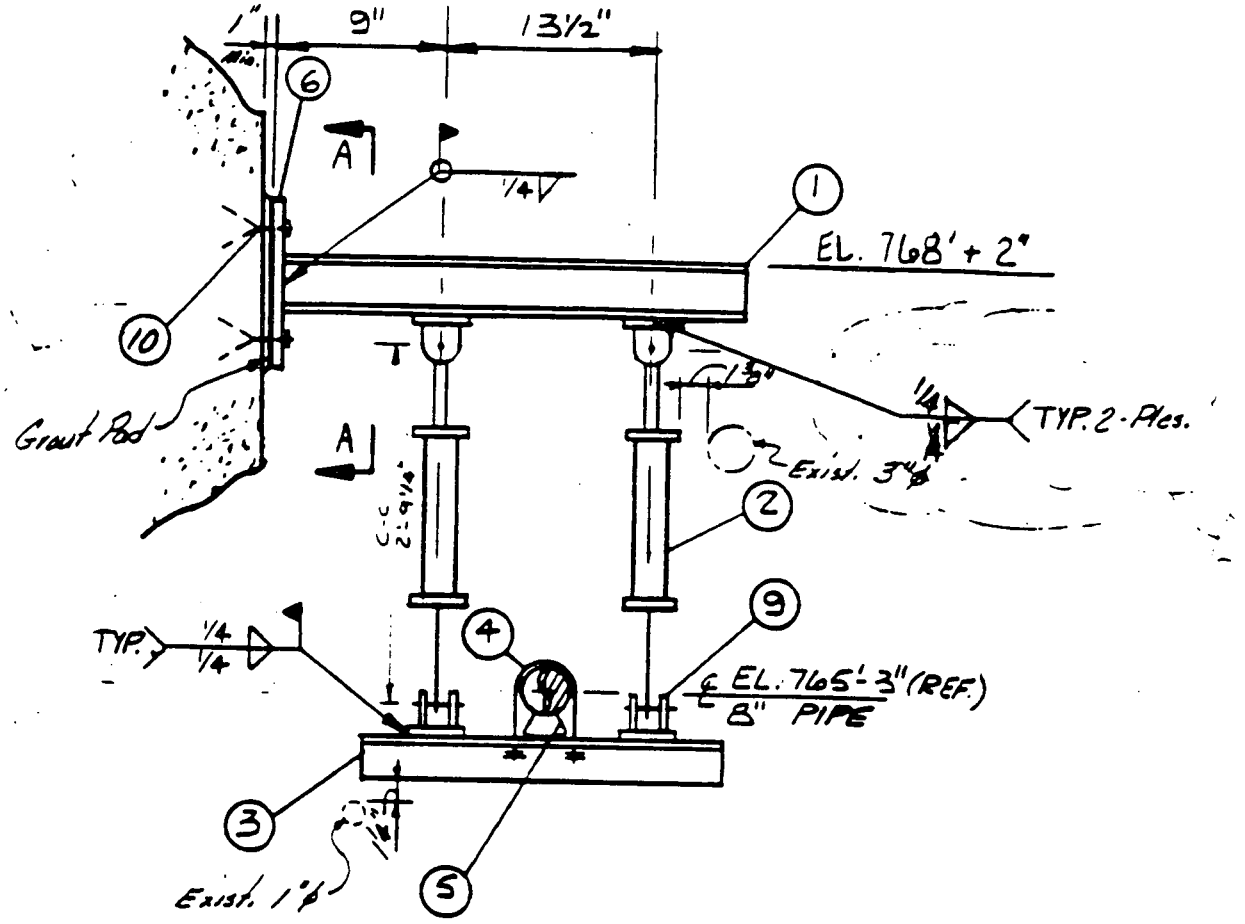

ELEV. LKG. NORTH

DUKE POWER COMPANY

PROJECT OCONEE NUCLEAR STA. UNIT 1

Q A CONDITION 1

SHEET NO. 2 OF 2 REV. 3

MARK NO. 1-54A-0-4358-DE10

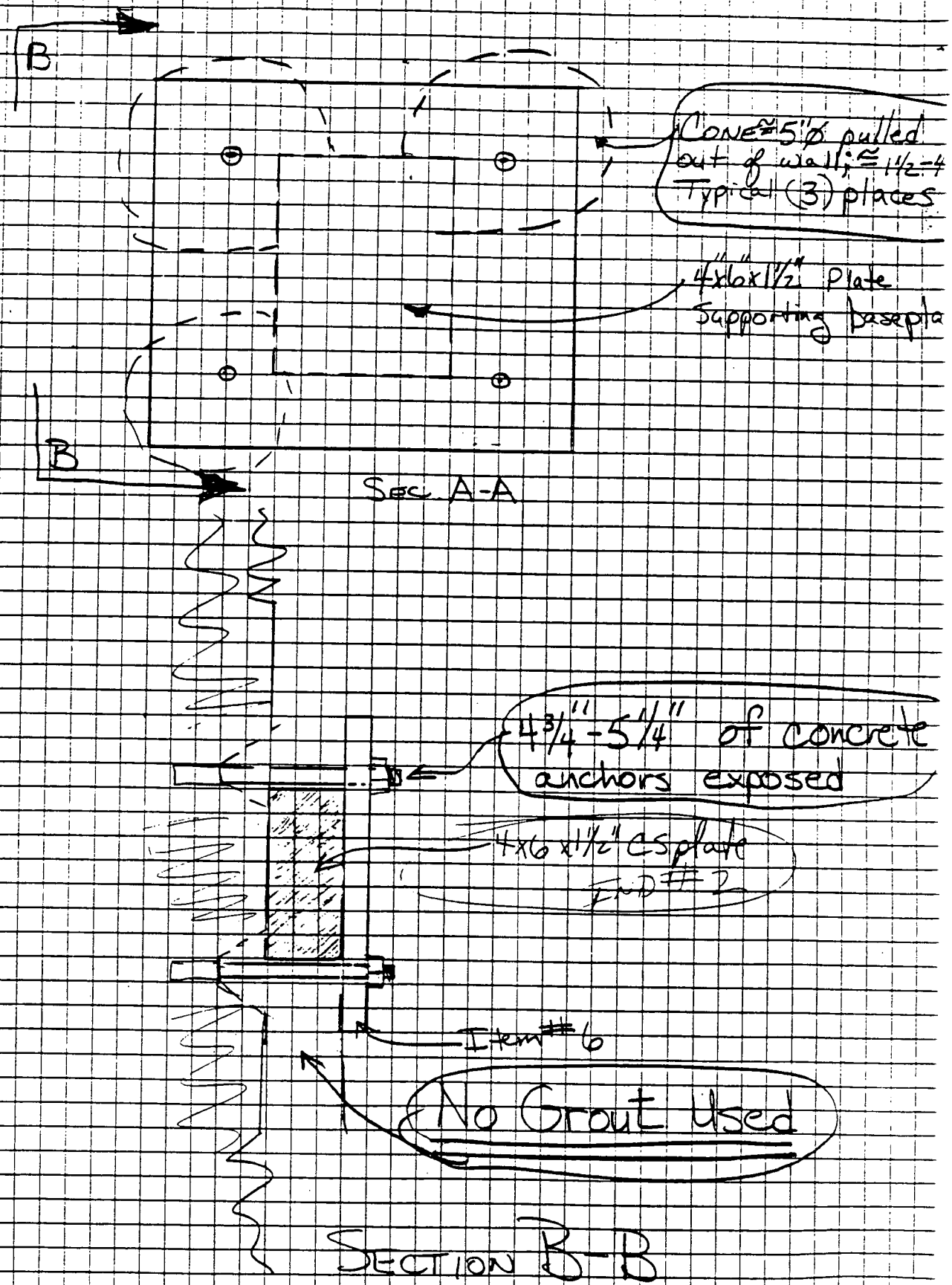
B
B
Cone ≅ 5" ø pulled out of wall; ≅ 1½-4 Typical (3) places
4"x6"x1½" Plate supporting baseplate
SEC A-A
4¾" - 5¼" of concrete anchors exposed
4x6 x1½" CS plate
Item #2
Item #6
No Grout Used
SECTION B-B

Form 35372 (R6-89)

COMPLETE FORM BY PRINTING WITH BLACK BALL POINT PEN OR TYPE

INFORMATION ONLY

DUKE POWER COMPANY
NUCLEAR STATION

Problem Investigation Report Serial No. 1-091-0085
Station Oconee
Licensee Event Report No. _____

I. Problem Occurred-Time/Date: UNKNOWN Discovered-Time/Date: 8-24-91
Unit(s): 1 Unit Status At Time Problem Occurred/Discovered: Refueling Outage
Description and Cause of Problem: During Ultrasonic Examination on 1-ST Item # B12.011.02 Weld # 1PIB1-5 an indication 1.6" Long with ½" through wall Depth starting at 2.2" and ending at 2.8" inches

Other Duke Stations Affected ☐ Yes ☑ No Determined By/Date: T G Patterson 8-26-91
Comments: _____

Location of Problem: Rx Bldg. Basement On the suction Piping for 1B1-RC Coolant Pump
Method Used to Discover Problem: Ultrasonic Examination per Piping procedure NDE-600 Rev 0
Immediate Corrective Actions Taken/To Be Taken: _____

Work Stoppage Notification (Form QCK-2A) Serial No.: N/A
Information Sources/References (Work Requests, Documents Violated, etc.): NDE-600, ASME SEC XI

Originated By: T G Patterson Date: 8-26-91 Dept./Group/Section: QA Tech Sup

II. Compliance Evaluation Item/System Operable ☑ Yes ☐ No ☐ Not Applicable
Evaluated By/Date: Rick Matheson 9/10/91 Comments: Operability by Design
Reportable ☐ Yes ☑ No Reportable Per: ☐ 50.73 Section _____ ☐ 50.72 Section _____
☐ 73.71 Section ☐ T.S./Lic Cond Section _____ ☐ Part 21 ☐ Other: _____ ☐ Part 50.9
Evaluated By/Date: Rick Matheson 9/10/91 Comments: Determined by Operability

III. Telecon/ENS Report to NRC Time/Date: _____
NRC Contactee(s): _____ DPC Contactee(s): _____
Telegraph/Mailgram/Facsimile Transmission to NRC-Date: _____
Date Notified: NRC Res. Inspector: _____ Static Manager: _____
General Office: _____ Comments: _____

IV. Investigation Assigned To: _____ NRC Report Due Date: _____
Date Due to Compliance after Evaluation: _____
PIR Review (Compliance): _____ Date: _____
PIR Station Manager Approval: _____ Date: _____

V. Further Action/Evaluation Required ☑ Yes ☐ No (Explain Below):
Page 2 Assigned To: Design
Comments: _____

Compliance Review: Rick Matheson Date: 9/16/91 QA Review: T G Patterson Date: 9-16-91

Distribution

Initial	Originator						
8/26/91	DColeman	Lee (4)	B Barron	JM Clause	K Weldon	S Crowe	R Rowe
Final	Originator	Lee (4)	K Davis	JM Clause	S Crowe	S Bradshaw	S Freeman
9-30-91	DColeman	H Lowery	P Harmon	K Davis	K Weldon	C Hardison	P Abraham
9-30-91					R Glazier	C Hardison	R Rowe

Form 35387 (R6-89)

PROBLEM INVESTIGATION REPORT

PIR No. 1-091-0085

VI. Proposed Resolution of Problem

Stress Analysis has performed a calculation (OSC-1522) per the requirement of ASME Section XI. The conclusion of this calculation is that the system is suitable for continued operation as found. B&W has reviewed this calculation and concurs with this conclusion.

Based on the above, the unit is safe for continued operation without removal or repair of the indication.

R. L. Williams 9/10/91
By Date

Other Approved C W Boyd 9-10-91
Date

Other Approved _____
Date

Approved _____
Date

Approved T J Coleman QA 9-16-91
Date

SCAE Required ☐ Yes ☑ No

Determined By/Date T J Coleman QA 9-16-91
Date

SCAE Assigned To: N/A

Remarks Considerations required are not applicable. TJC 9-16-91

Serial No. N/A

VII. QA Verification Requirements Verify additional examinations are performed in accordance with ASME Sec XI.

Assigned To QA Tech Support

VIII. Corrective Action Completed _____
Date

Additional welds were examined per program requirements

RICK Matheson 9-16-91

Approved _____
Date

IX. QA Verification Results Verified additional examinations were performed in accordance with ASME Sec XI IWB-2430 (a).

Completed By T J Coleman 9-16-91
Date

QA Approval C W Boyd 9-16-91
Date

Remarks _____

Final QA Review T J Coleman 9-16-91
Date

WELD LIST

IDENT NO.	PIECE NO.	DIAM.	THICK.
IRCP-1B1	NA	86.23"	8.50"
1	67	33.50"	2.33"
2	67-45	33.50"	2.33"
3	45-63	33.50"	2.33"
4	63-62	33.50"	2.33"
5	62-57	33.50"	2.33"
6	57-215	33.50"	2.33"
7	215-210	33.50"	2.33"
8	210-211	36.50"	2.33"
9	211-PUMP	36.50"	2.33"
10	63-87	8.25"	2.250"
11	87-88	3.50"	0.672"
12	218-58	8.75"	2.250"
45 LO	45	33.50"	2.33"
45 LI	45	33.50"	2.33"
62 LO	62	33.50"	2.33"
62 LI	62	33.50"	2.33"

BILL OF MATERIAL

PC NO	QTY	DESCRIPTION	MATL.
45	1	28" 45° ELBOW	SA 516 GR 70
62	1	28" 90° ELBOW	SA 516 GR 70
63	1	28" ID PIPE	A106 GR C
87	1	DRAIN NOZZLE	A105 GR 2
67	1	28" ID PIPE	A106 GR C
57	1	28" ID PIPE	A106 GR C
210	1	TRANSITION	A182 TP316
211	1	SAFE END	A376 TP 316
215	1	SALVAGED PIPE	A106 GR C
58	1	RTE MOUNTING PIPE	INCONEL B-166
NA	1	COOLANT PUMP CASE	A351 CF 8
88	1	SAFE END	INCONEL B-166
NA	1	STEAM GEN. NOZZLE	A508-64

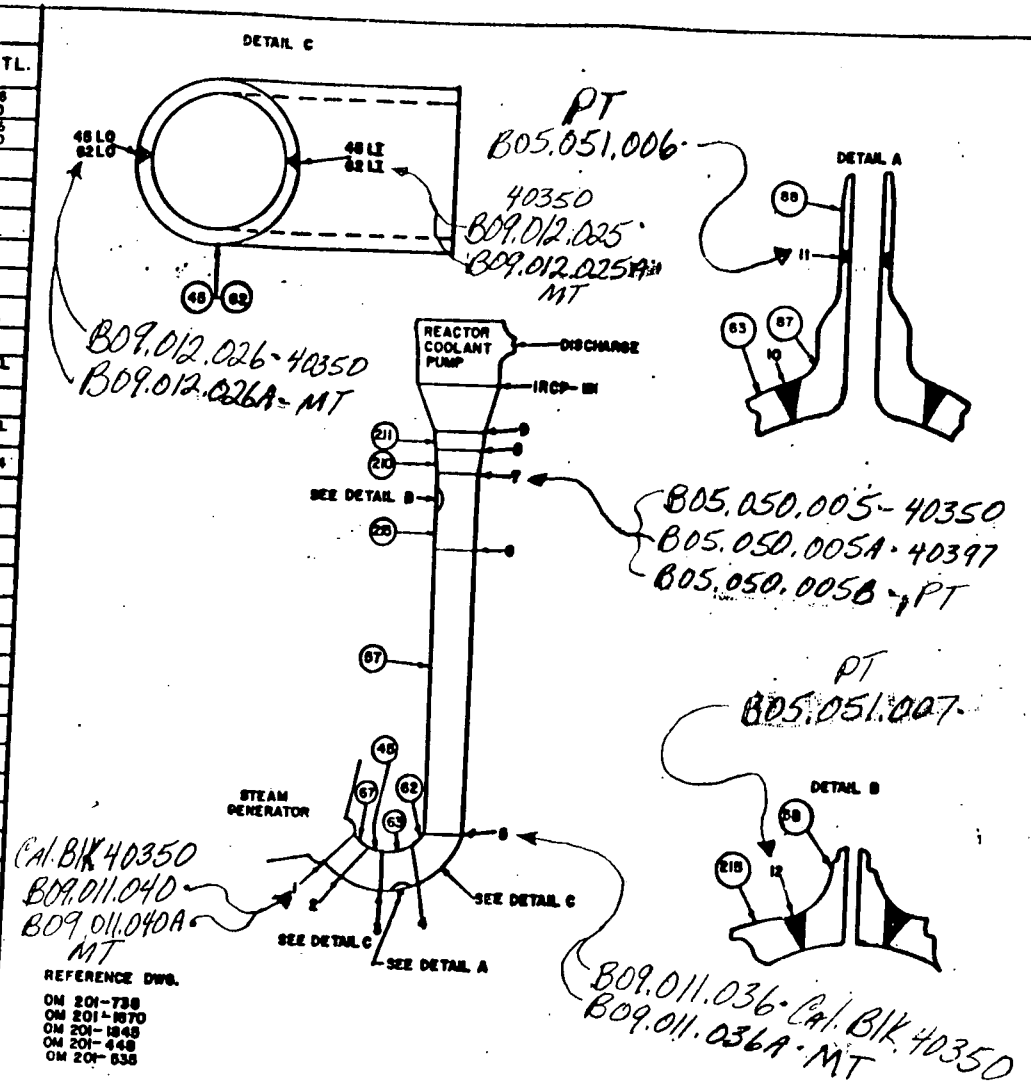

NOTES:

1. ALL WELD NUMBERS SHALL BE PRECEDED BY 1PIB1- EXCEPT WELD "IRCP-1B1"
2. PIECE NUMBERS ARE SHOWN BY CIRCLES

NO.	REVISION	DRWN DATE	RVWD DATE	APPD DATE
0	ORIG	[illegible] 7/2/71	[illegible] 7/2/71	[illegible] 7/2/71

TITLE
PUMP 1B1 SUCTION PIPING

DWG NO. ISI OCN 1-009

REV. 0

DUKE POWER COMPANY

ULTRASONIC EXAMINATION DATA SHEET FOR PLANAR REFLECTORS

Exam Start: 12:06 | FORM NDE UT-2A

Exam Finish: 13:06 | Revision 1

Station: OCONEE | Unit: 1 | Component/weld ID: 1PIBI-5 | Date: 8/13/91

Nominal Material Thickness (in./ dia.): 33.5 / 3.0 | Weld Length (in.): 105.24 | Surface Temperature: 69.4 deg F

Surface Condition: GROUND | Lo: WEST SIDE OF PIPE | Pyrometer S/N: 32916 cal due: 1/29/92

Examiner: D.L. Robinson Level: II | SCANS: 45 [■] +14 dB | Configuration: CIRC

Examiner: [signature] Level: II | 45T [■] +14 dB 60 [■] +14 dB | >>>>> Flow >>>>>

Calibration sheet No: 911015 911016 | 0 [ ] dB 60T [ ] dB | ELBOW to PIPE

Other: dB

Procedure No: NDE 600 Rev: 1 F/C: 9102 | *Applies to NDE-680 only* Skew angle: N/A | *Applies only to NDE-620, 640 and 680*

IND NO.	∡	Max % dac	W Max	L Max	MP Max	L1 20%dac HMA 50%dac	L2 20%dac HMA 50%dac	W1 20%dac HMA 50%dac	W2 20%dac HMA 50%dac	Mp1 20%dac HMA 50%dac	Mp2 20%dac HMA 50%dac	Beam Dir	Exam Surf.	Scan	Damps
1	45	50%	3.5	33.25	3.64	32.2	33.8					2	1	AXIAL	NO

Remarks: NO OTHER INDICATIONS FOUND

Limitations: see NDE-UT-4 [■] None: [ ] | ACCEPTABLE/NO RECORDABLE INDICATIONS: [ ] | sheet 1 of 6

Reviewed By: [signature] Level: II Date: 8-14-91 | Authorized Inspector [signature] Date 8-20-91 | Item No: B09.011.036

DUKE POWER COMPANY

ULTRASONIC CALIBRATION SHEET FOR USD-10 INSTRUMENTS

FORM NDE UT-1C

REVISION 1

Station: OCONEE	Unit: 1	Date: 8/13/91	Sheet number: 911015
Procedure: NDE 600 Rev: 1 F/C: 9102		Couplant: ULTRA-GEL	Batch No: 8981
Examiner: JSBubb	Level: II	Calibration Block ID: 40350	Pyrometer S/N: 32916
Examiner: O.C. Robinson	Level: II	Calibration Block Temp: 72.1	Cal. due: 1/29/92

REFERENCE BLOCK

ID: 1076-83 Type: IIW Material: C/S

SIMULATOR BLOCK

ID: OCSIM-2 Signal Amp: 34 Gain: 63.8 Reflector Type: HOLE Metal Path: .641 Temp: 72.1

INSTRUMENT

Serial No: 31501-921 Manufacturer: KRAUTKRAMER

TRANSDUCER

Type: Single ■ Dual □ Frequency: 2.25 Mhz Measured ∠ = 45 Size: 1.0 Manufacturer: KBA Serial No: E15769

INSTRUMENT SETTINGS

Reject	OFF
Damping	50
Display Delay	0
Probe Delay	12.07
Velocity	124.0
Thickness	8
Gain	63.8
Frequency	2.25
Filter	N/A
Screen Depth	5.6
Angle	45
Display Width	8.0

Rep Rate: 2

Dual: on □ off ■

Rectify: fw □ +hw □ rf ■ -hw □

Jack Used: T___ /R___

CALIBRATION

Reflector Type: HOLE	amplitude % FSH	metal path inches
2 /8 node	72 %	2.08
3 /8 node	80 %	3.16
6 /8 node	24 %	6.24
/8 node	%	
/8 node	%	
/8 node	%	
other	%	
opposite notch	* %	4.24

cal. direction: axial ■ circ. ■

Wave Mode: shear: ■ longitudinal: □ surface: □

METHOD

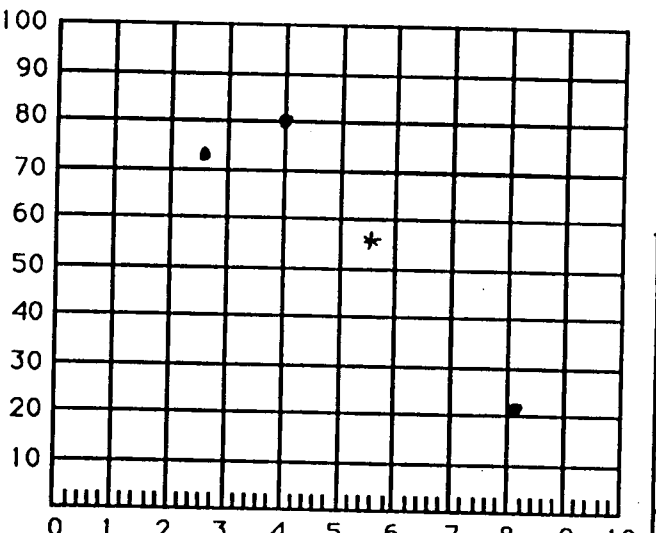

1 Major Screen Div= .8 ...ches

CABLES

RG62 □
RG58 □
RG174 □
other 8218
Length: 10 FT

Initial Calibration Time: 10:06

CAL CHECKS

Time	Initials
12:04	JSB
13:40	JSB

REMARKS:

Component/Item No: B09.011.088
B09.011.036

sheet 2 of 2

REVIEWED BY: JJ Moss

LEVEL: II

DATE: 8-14-91

AUTHORIZED INSPECTOR N F Elgin ANII/ANII

DATE: 8-20-91

DUKE POWER COMPANY

ULTRASONIC CALIBRATION SHEET FOR USD-10 INSTRUMENTS

FORM NDE UT-1C

REVISION 1

Station: OCONEE	Unit: 1	Date: 8/13/91	Sheet number: 911016
Procedure: NDE 600 Rev: 1 F/C: 9102		Couplant: ULTRA-GEL	Batch No: 8981
Examiner: [signature]	Level: II	Calibration Block ID: 40350	Pyrometer S/N: 32916
Examiner: D.L. Robinson	Level: II	Calibration Block Temp: 72.1	Cal. due: 1/29/92

REFERENCE BLOCK

ID: 1076-83
Type: IIW Material: C/S

SIMULATOR BLOCK

ID: OCSIM-2 Signal Amp: 42 Gain: 71
Reflector Type: HOLE Metal Path: .606 Temp: 72.1

INSTRUMENT

Serial No: 31501-921
Manufacturer: KRAUTKRAMER

TRANSDUCER

Type: Single ■ Dual □ Frequency: 2.25 Mhz
Size: 1.0 Manufacturer: KBA Serial No: E01705
Measured ∠ = 61

INSTRUMENT SETTINGS

Reject	OFF
Damping	50
Display Delay	0
Probe Delay	18.02
Velocity	126.0
Thickness	11
Gain	65
Frequency	2.25
Filter	N/A
Screen Depth	5.5
Angle	60
Display Width	11

Rep Rate: 2
Dual: on □ off ■
Rectify: fw □ +hw □ rf ■ -hw □
Jack Used: T___ R___

CALIBRATION

Reflector Type: HOLE	amplitude % FSH	metal path inches
2 /8 node	80 %	3.081
3 /8 node	62 %	4.73
6 /8 node	22 %	9.16
/8 node	%	
/8 node	%	
/8 node	%	
other	%	
opposite notch	* %	6.11

cal. direction: axial ■ circ. □

Wave Mode: shear: ■
longitudinal: □ surface: □

METHOD

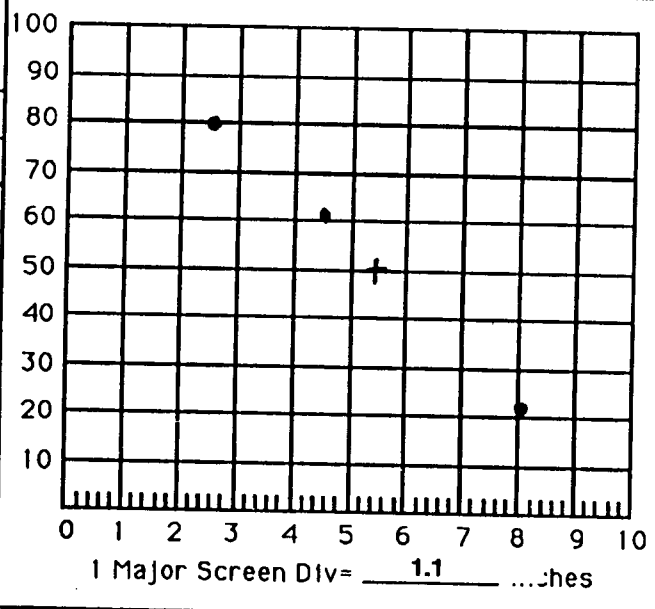

1 Major Screen Div= 1.1 ...ches

CABLES

RG62 □
RG58 □
RG174 □
other 8218
Length: 10 FT

Initial Calibration Time: 9:47

CAL CHECKS

Time	Initials
12:46	[initials]
13:33	[initials]

REMARKS: *1 DB WAS ADDED TO REACH DAC

Component/Item No: B09.011.036

REVIEWED BY: [signature] LEVEL: II DATE: 8-14-91

AUTHORIZED INSPECTOR [signature] ANI/ANII DATE: 8-20-91

DUKE POWER COMPANY
ISI LIMITATION REPORT

FORM NDE-UT-4
Revision 1

Component/Weld ID: 1PIB1-5 Item No: B09.011.036

remarks:

☐ NO SCAN SURFACE BEAM DIRECTION
☒ LIMITED SCAN ☒ 1 ☐ 2 ☐ 1 ☒ 2 ☐ cw ☐ ccw
FROM L 0 to L 360 INCHES FROM WO 0 to 2.3
ANGLE: ☐ 0 ☒ 45 ☒ 60 other ____ FROM ____ DEG to ____ DEG

☐ NO SCAN SURFACE BEAM DIRECTION
☒ LIMITED SCAN ☐ 1 ☒ 2 ☒ 1 ☐ 2 ☐ cw ☐ ccw
FROM L 0 to L 360 INCHES FROM WO 0 to 3.0
ANGLE: ☐ 0 ☒ 45 ☒ 60 other FROM ____ DEG to ____ DEG

☐ NO SCAN SURFACE BEAM DIRECTION
☒ LIMITED SCAN ☐ 1 ☒ 2 ☐ 1 ☐ 2 ☒ cw ☒ ccw
FROM L 0 to L 360 INCHES FROM WO -.70 to 3.0
ANGLE: ☐ 0 ☒ 45 ☐ 60 other FROM ____ DEG to ____ DEG

☐ NO SCAN SURFACE BEAM DIRECTION
☐ LIMITED SCAN ☐ 1 ☐ 2 ☐ 1 ☐ 2 ☐ cw ☐ ccw
FROM L ____ to L ____ INCHES FROM WO ____ to ____
ANGLE: ☐ 0 ☐ 45 ☐ 60 other FROM ____ DEG to ____ DEG

Sketch(s) attached ☐ yes ☒ no

Prepared By: D.L. Robinson Level: II Date: 8-13-91 Sheet 4 of 6

Reviewed By: D.J. Moss Date: 8-14-91 Authorized Inspector: R F Elgin ANII/AIVII Date: 8-20-91

Form 00184 (R4-88)

DUKE POWER COMPANY

Station OCONEE Unit 1 Rev. ____ File No. ____ Sheet 5 Of 6

Subject B09.011.036

By ____ Date 8-13-9

Prob No. ____ Checked By ____ Date ____

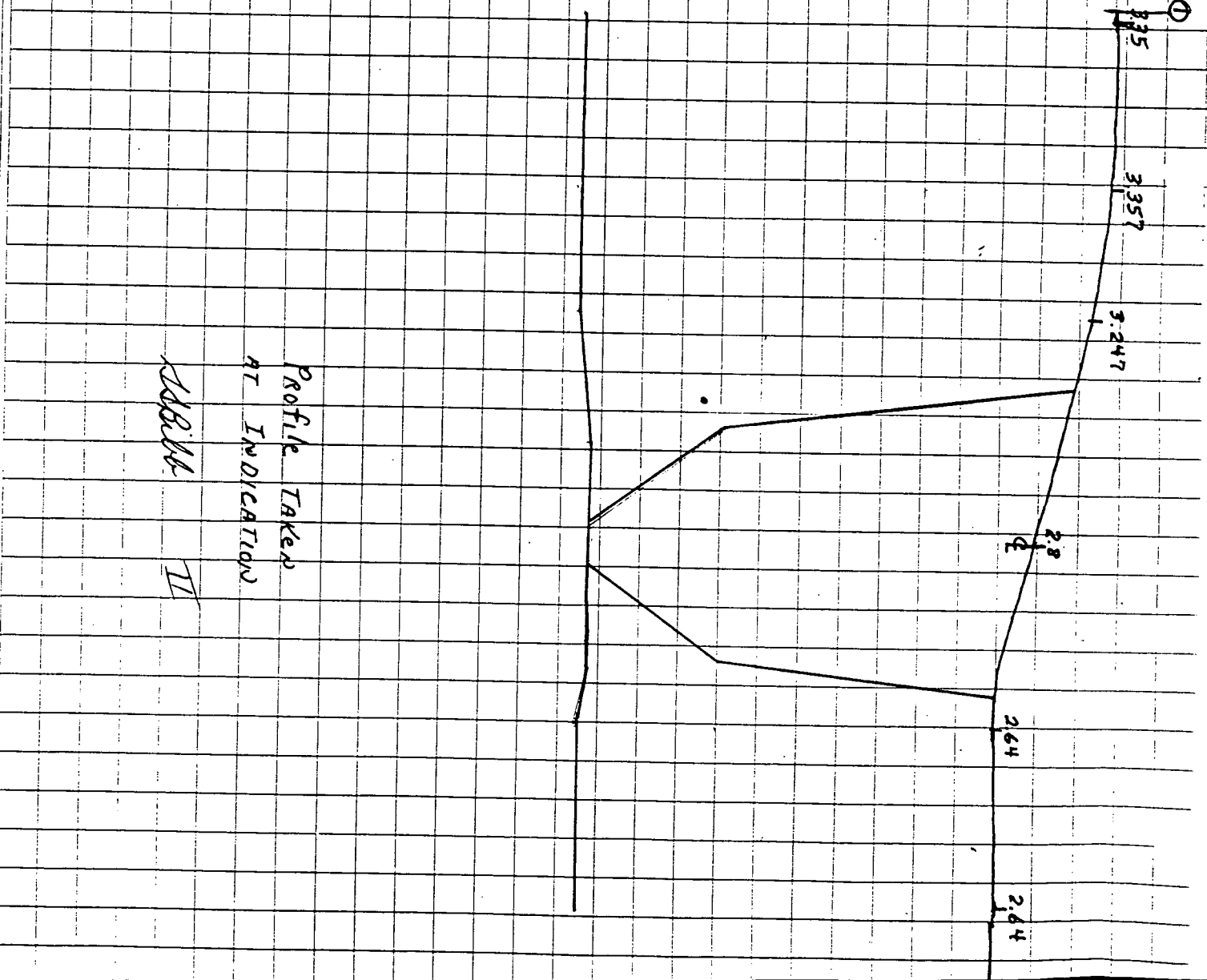

DUKE POWER COMPANY

UT PROFILE/PLOT/RESOLUTION SHEET

NDE-UT-5

Revision 0

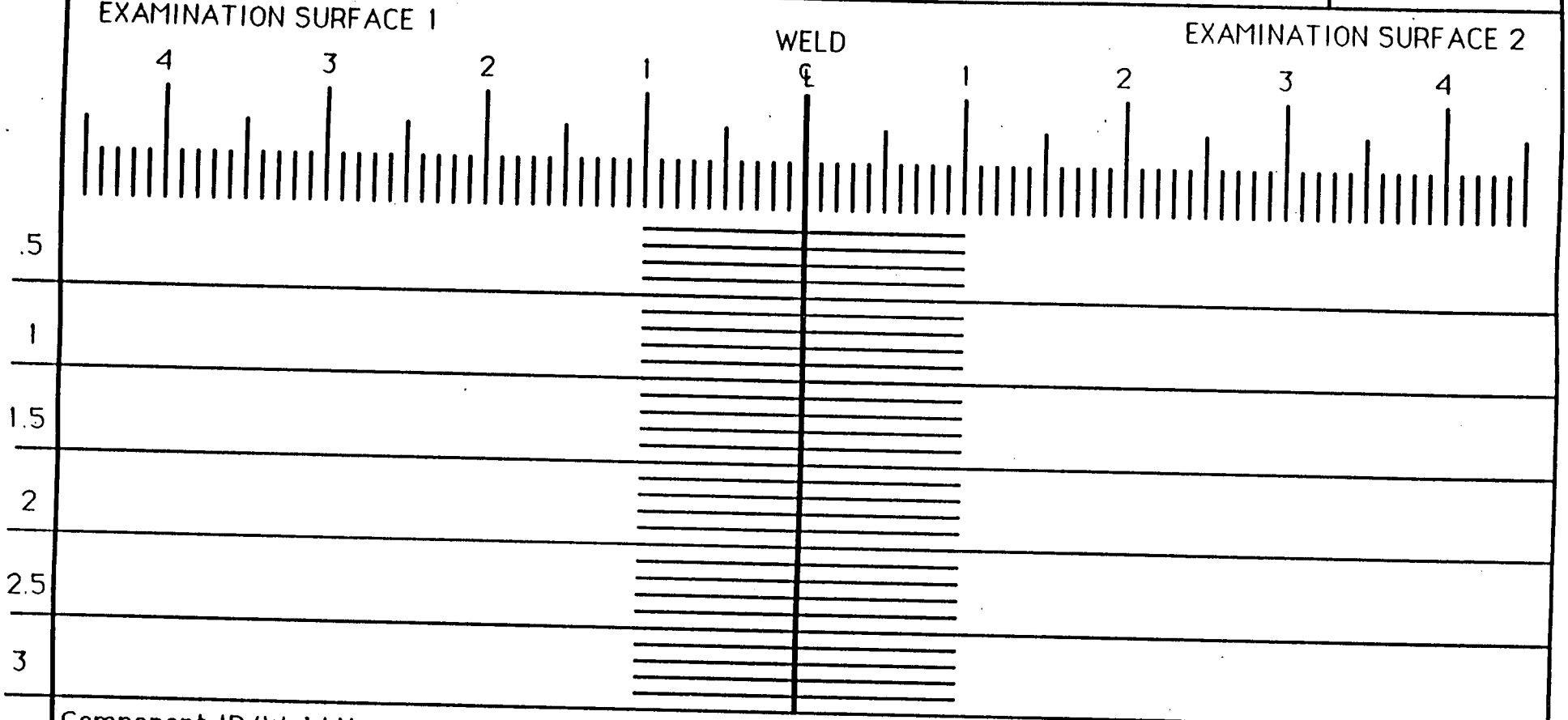

Component ID/Weld No. 1PIB1-5

Resolution/Comments:

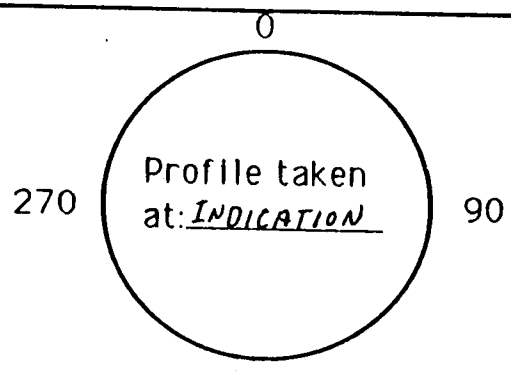

Examiner: D.C. Robinson	Level: II	Date: 8-13-91
Reviewed By: D J Moss	Level: II	Date: 8-14-91
Authorized Inspector:		Date:

DUKE POWER COMPANY

ULTRASONIC FLAW SIZING DATA SHEET

Exam Start: 1202 | FORM NDE 6.0B

Exam Finish: 1210 | Revision 0

Station: OCONEE	Unit: 1	Component/weld Identification: 1PIB1-5	Date: 8/24/91
Measured Wall Thickness (in.): 3.2		Material Type: C.S.	Surface Temperature: 63 deg F
Surface Condition: AS GROUND.		L max: 33.25" (from examination data sheet)	Pyrometer S/N: 32597
Examiner: O.L. Robinson	Level: II	Configuration: PIPE CIRC.	Calibration sheet No: 911045
Examiner:	Level:		

Through Wall Measurement

Exam Surface	30-70-70	PATT	SPOT	BI Modal	HALT
1	n/A	2.38/2.8	n/A	n/A	n/A

Reported Through Wall Dimension: 2.8 - 2.38 = .58

Subsurface ☐

Surface Connected ☐

Surface By Proximity ☒

a = .4

l = 1.6

a/l = .25

a/t % = 13%

Sketch:

Remarks:

sheet ____ of ____

Reviewed By:	Level:	Date:	ANII Review	Date	Item No:
M J Mays	II	8-25-91			B09.011.036

Form 35372 (R6-89)

COMPLETE FORM BY PRINTING WITH BLACK BALL POINT PEN OR TYPE

DUKE POWER COMPANY
NUCLEAR STATION

Problem Investigation Report Serial No. 1-091-0089
Station Oconee
Licensee Event Report No. _____

I. Problem Occurred-Time/Date: 11:00am 9-4-91 Discovered-Time/Date: 11:00am 9-4-91
Unit(s): 1 Unit Status At Time Problem Occurred/Discovered: Refueling Outage
Description and Cause of Problem: During Magnetic Particle Examination on ISI/Item # C02.021.001A weld # 1SGA-WG23-1 a linear indication .5" long was reported. This indication is reportable per NDE-25 step 17.2.1 (b) (original construction code).

Other Duke Stations Affected ☐ Yes ☑ No Determined By/Date: T.J. Coleman 9-4-91
Comments: _____

Location of Problem: Unit 1 Rx Bldg Main Steam Nozzle To Vessel weld on "A" Gen. Elev 825'
Method Used to Discover Problem: Magnetic Particle Examination (NDE 25)
Immediate Corrective Actions Taken/To Be Taken: None

Work Stoppage Notification (Form QCK-2A) Serial No.: N/A
Information Sources/References (Work Requests, Documents Violated, etc.): NDE 25 ASME Sec. XI

Originated By: T.J. Coleman Date: ~~9-12-91~~ 9-4-91 Dept./Group/Section: QA Tech. Support

II. **Compliance Evaluation**-Item/System Operable ☑ Yes ☐ No ☐ Not Applicable
Evaluated By/Date: Rick Matheson 9/10/91 Comments: Operability by Design
Reportable ☐ Yes ☑ No Reportable Per: ☐ 50.73 Section _____ ☐ 50.72 Section _____
☐ 73.71 Section ☐ T.S./Lic Cond Section _____ ☐ Part 21 ☐ Other: _____ ☐ Part 50.9
Evaluated By/Date: Rick Matheson 9/10/91 Comments: Determined by Operability

III. Telecon/ENS Report to NRC Time/Date: _____
NRC Contactee(s): _____ DPC Contactor(s): _____
Telegraph/Mailgram/Facsimile Transmission to NRC-Date: _____
Date Notified: NRC Res. Inspector: _____ Station Manager: _____
General Office: _____ Comments: _____

IV. Investigation Assigned To: _____ NRC Report Due Date: _____
Date Due to Compliance after Evaluation: _____
PIR Review (Compliance): _____ Date: _____
PIR Station Manager Approval: _____ Date: _____

V. Further Action/Evaluation Required ☑ Yes ☐ No (Explain Below):
Page 2 Assigned To: Design
Comments: _____

Compliance Review: Rick Matheson Date: 9/16/91 QA Review: T.J. Coleman Date: 9-16-91

Distribution CSM 9/4/91

Initial	Originator	Supt (4)	B. Barron	B. Dolan / T McClure	R Henderson / R. Williams / S. Benesole	R Elgin / S. Crews / QA Tech Ser	R. Rouse / C Boyd / M Sills
9/4/91	TJ Coleman	H Lowery	P. Harmon	CA Robinson	L. Firebaugh	G. Lareau	B Dobson
Final	Originator	Supt (4)	B. Barron	T McClure	R Henderson	S Crews	QA Tech Ser
9-30-91	TJ Coleman	H. Lowery	P Harmon	R Elgin	B. Dolan	Benesole S.	L Firebaugh
							P. Abraham

Form 35387 (R6-89)

PROBLEM INVESTIGATION REPORT

PIR No. 1-091-0089

VI. Proposed Resolution of Problem

Indication was removed by grinding with subsequent MT to ensure complete removal. Depth of removal area was .050". Remaining wall thickness is .455" which is greater than the 4.500" minimum specified on B&W drawing 10190D (OM 201-34). Removal area was faired out to a smooth contour.

Based on the above, no further repair is required

R. L. Williams 9/10/91
By Date

Other Approved C. W. Boyd 9/10/91
Date

Other Approved _____
Date

Approved _____
Date

Approved T. J. Coleman 9-16-91
QA Date

SCAE Required ☐ Yes ☑ No

Determined By/Date T. J. Coleman 9-16-91
QA Date

SCAE Assigned To: N/A

Serial No. N/A

Remarks Considerations required are not applicable per 9-4-91

VII. QA Verification Requirements Verify indication is removed & additional examinations are performed in accordance with ASME Sec XI

Assigned To QA Tech Support

VIII. Corrective Action Completed Indication removed under WR 91D73194-01. 9-16-91
Date

Approved T. J. Coleman 9-16-91
Date

IX. QA Verification Results Verified indication had been removed and additional exam performed in accordance with ASME Sec XI IWC 2430(a).

Completed By T. J. Coleman 9-16-91
Date

QA Approval [signature] 9.16.91
Date

Remarks _____

Final QA Review T. J. Coleman 9-16-91

COMPLETE FORM BY PRINTING WITH BLACK BALL POINT PEN OR TYPE

DUKE POWER COMPANY
NUCLEAR STATION

INFORMATION ONLY

Problem Investigation Report Serial No. 4-091-0093
Station Oconee
Licensee Event Report No. _____

I. Problem Occurred-Time/Date: Unknown Discovered-Time/Date: 9-9-91 / 14:30
Unit(s): All Unit Status At Time Problem Occurred/Discovered: Unit 1 Refueling Outage
Description and Cause of Problem: During review of ISI Data it was discovered that inspections had been performed using the wrong acceptance standards for Nozzle to Vessel welds.

Other Duke Stations Affected ☑ Yes ☐ No Determined By/Date: TJ Coleman 9-9-91
Comments: _____

Location of Problem: Oconee
Method Used to Discover Problem: Review process
Immediate Corrective Actions Taken/To Be Taken: None

Work Stoppage Notification (Form QCK-2A) Serial No.: N/A
Information Sources/References (Work Requests, Documents Violated, etc.): NDE-25

Originated By: TJ Coleman Date: 9-9-91 Dept./Group/Section: QA Tech Sup

II. **Compliance Evaluation**-Item/System Operable ☑ Yes ☐ No ☐ Not Applicable
Evaluated By/Date: Rick Mathews 9/10/91 Comments: _____
Reportable ☐ Yes ☑ No Reportable Per: ☐ 50.73 Section _____ ☐ 50.72 Section _____
☐ 73.71 Section ☐ T.S./Lic Cond Section _____ ☐ Part 21 ☐ Other: _____ ☐ Part 50.9
Evaluated By/Date: Rick Mathews 9/10/91 Comments: _____

III. Telecon/ENS Report to NRC Time/Date: _____
NRC Contactee(s): _____ DPC Contactor(s): _____
Telegraph/Mailgram/Facsimile Transmission to NRC-Date: _____
Date Notified: NRC Res. Inspector: _____ Station Manager: _____
General Office: _____ Comments: _____

IV. Investigation Assigned To: _____ NRC Report Due Date: _____
Date Due to Compliance after Evaluation: _____
PIR Review (Compliance): _____ Date: _____
PIR Station Manager Approval: _____ Date: _____

V. Further Action/Evaluation Required ☑ Yes ☐ No (Explain Below):
Page 2 Assigned To: QA - 6.0.
Comments: _____

Compliance Review: _____ Date: _____ QA Review: TJ Coleman Date: 10-23-91

Distribution RS 9/10/91 B Dolson C Rossi M Sinclair J Hastings B Reeside R Roy

Initial	Originator	Dept Lg	P Harmon	R Glover	L Beverly	C Aycock	C Hopkins
9-10-91	TJ Coleman	H Conley	B Barron	D Brown	T McConnell	S Dunlap	H Lucas
Final	Originator						

PROBLEM INVESTIGATION REPORT

PIR No. 4-091-0093

VI. Proposed Resolution of Problem SEE ATTACHMENT 1

R B Rowe 10/7/91
By Date

Other Approved T L Tucker 10/7/91
Date

Approved
Date

Other Approved
Date

Approved T. J. Coleman 10-31-91
QA Date

SCAE Required ☐ Yes ☑ No

Determined By/Date T J Coleman 11-20-91
QA Date

SCAE Assigned To:

Serial No.

Remarks The root cause and corrective action to prevent recurrence is adequately addressed in Section VI. PIR M91-0174 was written at McGuire Nuclear Station and PIR O-C91-0439 was written at Catawba addressing the problem

VII. QA Verification Requirements Verify the actions identified in Section VI are performed with appropriate procedures

Assigned To QA Tech Support 11-20-91
Date

VIII. Corrective Action Completed

Approved
Date

IX. QA Verification Results

Completed By
Date

QA Approval
Date

Remarks

Final QA Review
Date

ATTACHMENT 1
PIR 4-091-0093
PAGE 1 OF 1

Proposed Resolution to PIR 4-O91-0093

All of the nozzle-to-shell welds (ASME Section XI C-B Welds) for the second interval at Oconee Units 1, 2, and 3 have been reviewed to determine the extent of this situation. This review revealed that this was not an isolated case and the incorrect acceptance criteria was used for all nozzle-to-shell welds.

The following corrective actions will be taken:

- Procedure NDE-25 will be revised to clarify when to use Appendix A vs the other ISI acceptance Appendices. As a result of this revision, training will be conducted for all Level II MT/PT Inspectors at Oconee. (During the process of investigating this situation, it was identified that procedure NDE-35 is worded similar to NDE-25 and also will be revised for clarification).

- The training program will be reviewed by the NDE Level III Examiner to ensure that the lesson plan adequately addresses how to go about selecting the acceptance criteria in different situations.

- An Addenda will be written to the ISI Plan to re-schedule the nozzle-to-shell welds for re-examination.

The following is a list of the ASME Section XI Item Numbers assigned to the nozzle-to-shell welds which were reviewed for this disposition:

UNIT 1	UNIT 2	UNIT 3
C02.010.001	C02.010.001	C02.010.001
C02.010.002	C02.010.002	C02.010.002
C02.010.003	C02.010.003	C02.010.003
C02.010.004	C02.010.004	C02.010.004
C02.021.001A	C02.021.001A	C02.021.001A
C02.021.002A	C02.021.002A	C02.021.002A
C02.021.003A	C02.021.003A	C02.021.003A
C02.021.004A	C02.021.004A	C02.021.004A
C02.021.005A	C02.021.005A	C02.021.005A
C02.021.006A	C02.021.006A	C02.021.006A

10.0 Reference Documents

The following reference documents apply to the inservice inspection performed during Outage 13 at Oconee 1.

Babcock & Wilcox "1991 Reactor Vessel Examination Report" (3.0 Examination Summary), dated September 26, 1991.

Duke Power Company Certificate of Engineering Calculation Number OSC-4547, dated November 15, 1991.

Duke Power Company Design Engineering Calculation Work Sheet OSC-1522, dated September 13, 1991.

Duke Power Company Design Engineering Operability Evaluation, dated September 10, 1991.

Duke Power Company Design Engineering Comments/Disposition, Serial Number SN/31, dated September 5, 1991.

Duke Power Company Design Engineering Exempt Change OE-4211, dated August 29, 1991.

Duke Power Company Request for Relief ONS-001.

Duke Power Company Request for Relief ONS-003.

Duke Power Company Request for Relief ONS-005.

Duke Power Company Request for Relief ONS-014.

Copy No.: ____
Controlled: YES

1991

REACTOR VESSEL EXAMINATION REPORT

FOR

DUKE POWER COMPANY

OCONEE NUCLEAR STATION UNIT 1

Revision: 0 Outage: #13

Owner: Duke Power Company
P.O Box 33189
Charlotte, NC 28242

BWNS Reference Number: Contract 583-2034 Task 404

MANUFACTURER: Babcock & Wilcox, Lynchburg, Virginia
NRC DOCKET NUMBER: 50-269
GROSS GENERATING CAPABILITY: 2568 MWT
COMMERCIAL SERVICE DATE: July 16, 1973

Prepared by: W.D. Minton Date: 9-26-91
W.D. Minton - NDE Technology - EPS - BWNS

Reviewed by: M. G. Hacker Date: 9-26-91
M.G. Hacker - Supv. NDE Technology - EPS - BWNS

Approved by: D B Fairbrother Date: 9-26-91
D.B. Fairbrother - Mgr. NDE Services - EPS - BWNS

B&W NUCLEAR SERVICE COMPANY
Engineering & Plant Services
3315 Old Forest Road
Lynchburg, Virginia 24506

3.0 EXAMINATION SUMMARY

During the period of August 15 through August 27, 1991 the B&W Nuclear Service Company performed the second ten-year interval examination of the ONS-1 Reactor vessel. The examination also included examination of the adjacent piping welds terminating at the vessel. The examination was unique in that the examination exceeded the ASME Code requirements for scanning sensitivity and recording levels. These enhancements were used to establish the condition of the vessel weldments to the extent that state-of-the-art ultrasonic examination technology can provide and were directed specifically at detecting the presence of planar reflectors. The results of the examination indicate that no planar flaws were detected. Several low amplitude volumetric reflectors were detected and are all dimensioned less than the maximum allowable flaw sizes permitted by ASME Section XI, IWB-3500 acceptance standards.

The results of this examination were also compared to the last ten-year vessel examination. Previously recorded angle beam indications were detected and the status of these indications remains essentially unchanged. Many of the previously recorded laminar indications were not of recordable levels during this examination.

It is believed that this is due to the nature of the laminar reflectors. Most of what were called laminations during the last ten-year examination are believed to be plate segregates which are not as reflective with low frequencies. Frequencies of 1 MHz were used during this examination and 2.25 MHz were used during the last ten-year examination. The results of the angle beam examinations also support this conclusion.

In addition to the standard ASME Section XI examination volumes for ultrasonic examination, the piping welds were also examined for flaws at the O.D. surface. This was done using specially qualified ultrasonic examination techniques in lieu of a surface examination at the O.D..

Welds examined during this examination are listed in Attachment #1 in this section. Also contained in this section is Attachment #2 which is a reactor vessel drawing which illustrates the location of the welds examined. Attachment #3 is a table which summarizes the results of the examinations. Attachment #4 includes a comparison of the indications recorded during the first ten-year vessel examination in 1981 and the results of the second ten-year vessel examination.

ATTACHMENT #1

OCONEE UNIT 1

2nd 10 YEAR REACTOR VESSEL EXAMINATIONS

DESCRIPTION	WELD ID	PERCENT(1)
Upper Nozzle Belt to Flange Weld	WR19	100%
Upper Nozzle Belt to Lower Nozzle Belt Weld	WR18	100%
Lower Nozzle Belt to Upper Shell Weld	WR17	100%
Upper Shell to Intermediate Shell Weld	WR1A	100%
Intermediate Shell to Lower Shell Weld	WR1	100%
Lower Shell to Dutchman Weld	WR34	100%(2)
Upper Shell Long Seam Weld (Z-W Axis)	A10-WR2	100%
Upper Shell Long Seam Weld (X-Y Axis)	A10-WR2A	100%
Intermediate Shell Long Seam Weld (X-Y Axis)	A1-WR2	100%
Intermediate Shell Long Seam Weld (Z-W Axis)	A1-WR2A	100%
Lower Shell Long Seam Weld (X-Y Axis)	A2-WR2	100%
Lower Shell Long Seam Weld (Z-W Axis)	A2-WR2A	100%
Nozzle Belt Outlet Nozzle Weld (X-Axis) From Vessel Wall and from Nozzle Bore & Inside Radius Section	WR13	100%
Nozzle Belt Outlet Nozzle Weld (Z-Axis) From Vessel Wall and from Nozzle Bore & Inside Radius Section	WR13A	100%
Nozzle Belt to Inlet Nozzle Weld (W-X Axis) From Vessel Wall and from Nozzle Bore & Inside Radius Section	WR12	100%
Nozzle Belt to Inlet Nozzle Weld (X-Y Axis) From Vessel Wall and from Nozzle Bore & Inside Radius Section	WR12A	100%
Nozzle Belt to Inlet Nozzle Weld (Y-Z Axis) From Vessel Wall and from Nozzle Bore & Inside Radius Section	WR12B	100%

2nd 10 YEAR REACTOR VESSEL EXAMINATIONS

DESCRIPTION	WELD ID	PERCENT(1)
Nozzle Belt to Inlet Noz Weld (Z-W Axis) From Vessel Wall and from Nozzle Bore & Inside Radius Section	WR-12C	100%
Inlet Nozzle to Pipe Weld (W-X Axis)	1PDA1-9	100%
Inlet Nozzle to Pipe Weld (X-Y Axis)	1PDA2-9	100%
Inlet Nozzle to Pipe Weld (Y-Z Axis)	1PDB2-9	100%
Inlet Nozzle to Pipe Weld (Z-W Axis)	1PDB1-9	100%
Nozzle Belt to Core Flood Nozzle Weld (W Axis) and Inside Radius Section from Vessel Wall	WR54	100%
Nozzle Belt to Core Flood Nozzle Weld (W Axis) and Inside Radius Section from Nozzle Bore	WR54	0%(3)
Nozzle Belt to Core Flood Nozzle Weld (Y Axis) From Vessel Wall	WR54A	100%
Nozzle Belt to Core Flood Nozzle Weld (Y Axis) and Inside Radius Section from Nozzle Bore	WR54A	0%(3)
Core Flood Nozzle to Safe End Weld (W-Axis) from Nozzle and Safe End Sides	WR-53	100%
Core Flood Nozzle to Safe End Weld (Y-Axis) from Nozzle and Safe End Sides	WR-53A	100%
Core Flood Noz Safe End to Pipe Weld (W-Axis)	1-53A-2.3-43L	100%
Core Flood Noz Safe End to Pipe Weld (Y-Axis)	1-53A-1.2-1L	100%

3rd 10 YEAR INTERVAL INTERMEDIATE EXAMINATIONS

DESCRIPTION	WELD ID	PERCENT(1)
Outlet Nozzle to Pipe Weld (X-Axis)	1PHB-1	100%
Outlet Nozzle to Pipe Weld (Z-Axis)	1PHA-1	100%
Nozzle Belt to Outlet Nozzle Weld (X-Axis) and Nozzle Inside Radius Sections from the Nozzle Bore	WR-13	100%
Nozzle Belt to Outlet Nozzle Weld (Z-Axis) and Nozzle Inside Radius Sections from the Nozzle Bore	WR-13A	100%

(1) Maximum accessable length
(2) Examined full-node from above the weld only
(3) Examinations of Nozzle to Shell and Inside Radius from Nozzle Bore not performed due to flow restrictor obstruction. Exams satisfied by examinations from vessel wall.

WELD LAYOUT SKETCH OF OCONEE UNIT 1 REACTOR VESSEL

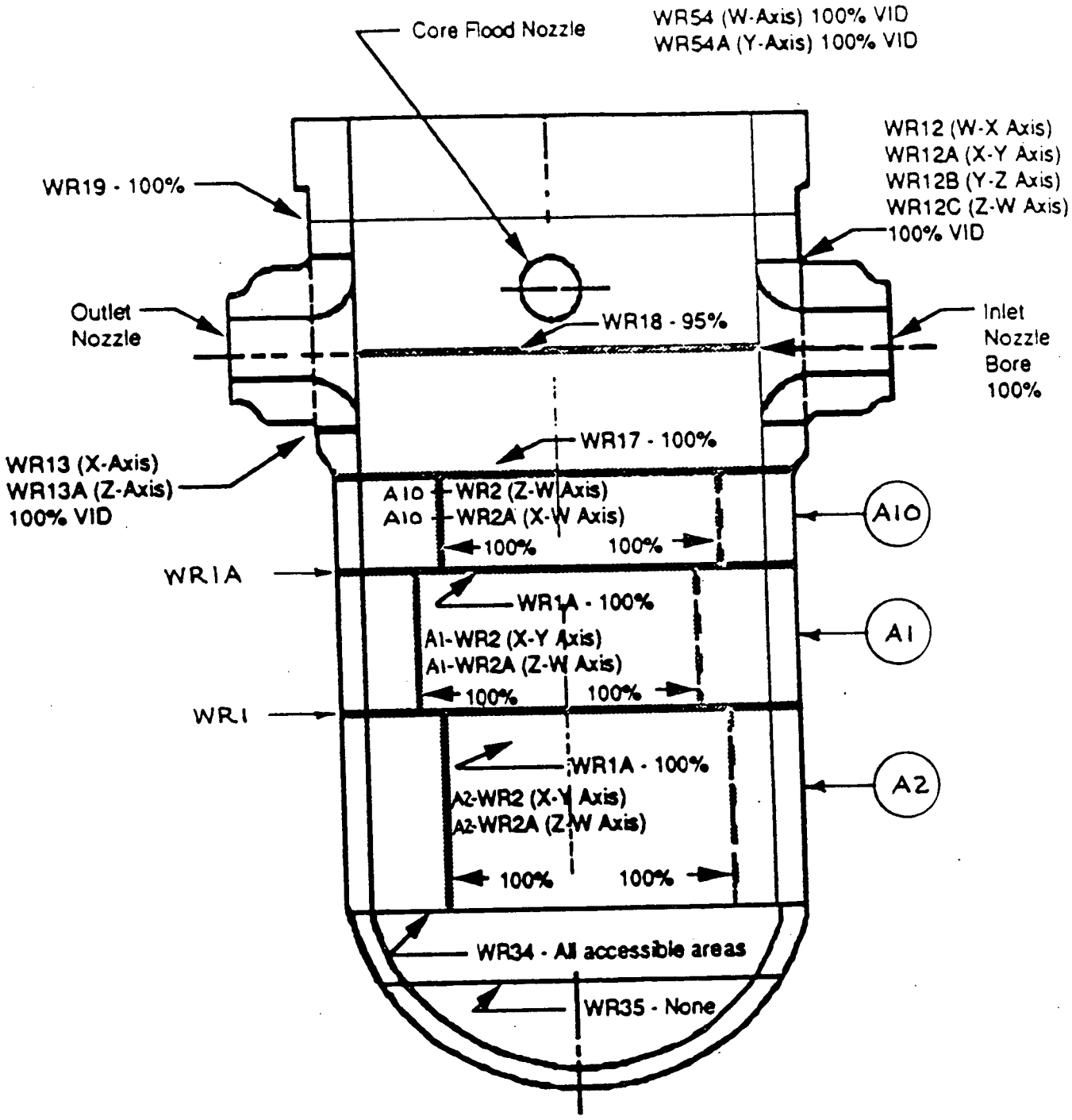

EXAMINATION SUMMARY TABLE

Contained in this attachment is a table which summarizes the results of each examination listed by the scan number. Contained within this table is the following information:

1) Scan Identification Number (SIN) used for examining the weld and the applicable segments and subscans comprising that SIN. For example, Figure Number B01.011.004 (Nozzle Shell Circle Seam) was examined with SIN's B2.1.1, B2.1.2, B2.1.3 and B2.2.1. SIN B2.1.1 is comprised of segments A-5 thru D-5; B2.1.2 and B2.1.3 have only one segment each (A-5); and B2.2.1 is comprised of segments A-6 through F-6.

2) The disk number and corresponding entries where the examination data is stored.

3) If the data analysis determined that recordable indications existed according to the procedure ISI-138 criteria, the recordable indications column is marked in the YES column. If not, then the NO column is marked. Recordable indications may include either geometric or flaw indications.

4) If the weld did contain recordable indications, the Evaluation Report number (ER) generated to disposition the indication(s) is listed (e.g. 91-001). If the weld did not contain recordable indications, an N/A is entered under the ER number.

5) The results of the Evaluation Report is listed. The description of this result is contained with the Evaluation Report included in Section 5.

6) If a limitation was encountered while examining the weld this would be indicated with a mark in either the YES or NO column. Drawings which illustrate this limitation are contained in Section 8. This item will be marked YES if there was some geometric obstruction which would have prevented the examination head from scanning to the extent required to provide the coverage of the examination volume specified in the examination procedure.

7) The transducer angle beams used to perform the scans of each particular SIN are listed in the ANGLES column.

8) The identification number of each analyst who analyzed the data for the SIN is indicated in the column marked ANALYST.

BABCOCK & WILCOX NUCLEAR SERVICE COMPANY
OCONEE NUCLEAR STATION UNIT 1

COMPARISON OF PREVIOUS ANGLE BEAM INDICATIONS

81 OUTAGE				91 OUTAGE				
IND. NO.	%AMP	DEPTH	ANGLE	IND. NO.	%AMP	DEPTH	ANGLE	EVALUATION
400	90	1.55	60°	---	20	1.53	60°	Not Recordable
401	159	1.30	60°	---			60°	Not Recordable
				604	77	1.20	70°	TWD at 50% DAC < Cal Hole
402	141	1.30	60°	---			60°	Not Recordable
				602	97	1.2	70°	TWD at 50% DAC < Cal Hole
600	63	.42	70°	---	61	.25	70°	CLAD Not Recordable
601	90	.25	70°	---	78	.29	70°	CLAD Not Recordable
602	56	.25	70°	---	51	.29	70°	CLAD Not Recordable
603	200	.25	70°	---	32	.45	70°	CLAD Not Recordable
604	50	.52	70°	---	31	.40	70°	Not Recordable
605	50	.52	70°				70°	Not Recordable
606	112	.7	70°	600	72	.64	70°	TWD at 50% DAC < CAL Hole
607	80	.42	70°	---	69	.41	70°	CLAD Not Recordable
608	50	.42	70°	---	70	.36	70°	CLAD Not Recordable
609	56	.52	70°	---	50	.37	70°	CLAD Not Recordable
610	63	.52	70°				70°	Not Recordable
611	50	.6	70°				70°	Not Recordable
612	63	.42	70°	---	50	.40	70°	CLAD Not Recordable
613	100	.25	70°	---	50	.25	70°	CLAD Not Recordable
614	100	.25	70°	---	30	.3	70°	CLAD Not Recordable
615	100	.6	70°	---	40	.40	70°	CLAD Not Recordable

EXAMINATION SUMMARY TABLE
OCONEE UNIT 1

SIN: SEGMENT SUBSCAN	DISK NO.	RECORDABLE INDICATION YES	RECORDABLE INDICATION NO	EVALUATION REPORT NO.	RESULTS OF EVAL REP.	LIMITED EXAM YES	LIMITED EXAM NO	ANGLES	ANAL.
B1.1.1:A-1	7		X	N/A	N/A	X		0, 45 60	HWS 7635
B1.1.1:B-1	15	X		ER 91-005	Acceptable	X		0, 45 60	MWK 2915
B1.2.1:A-2	9	X		ER 91-005	Acceptable	X		0, 45 60, 70	WJP 6274
B1.2.1:B-2	9	X		ER 91-005	Acceptable	X		0, 45 60, 70	SRB 4401
B1.3.1:A-4	7		X	N/A	N/A	X		45, 70	GAC 3507
B1.3.1:A-6	7		X	N/A	N/A	X		60	GAC 3507
B1.3.1:B-4	9		X	N/A	N/A	X		45, 70	GAC 3507
B1.3.1:B-6	7		X	N/A	N/A	X		60	GAC 3507
B2.1.1:A-5	12		X	N/A	N/A		X	0, 45 60, 70	WJP 6274
B2.1.1:B-5	12		X	N/A	N/A		X	0, 45 60, 70	WPJ 6274
B2.1.1:C-5	12		X	N/A	N/A		X	0, 45 60, 70	WJP 6274
B2.1.1:D-5	12	X		ER 91-004	Acceptable		X	0, 45 60, 70	WJP 6274
B2.1.2:A-5	12	X		ER 91-004	Acceptable	X		0, 45 60, 70	SRB 4401
B2.1.3:A-5	12		X	N/A	N/A	X		0, 45 60, 70	HWS 7635
B2.2.1:A-6	12	X		ER 91-004	Acceptable		X	45, 60 70	SRB 4401
B2.2.1:B-6	12		X	N/A	N/A		X	45, 60 70	SRB 4401

EXAMINATION SUMMARY TABLE
OCONEE UNIT 1

SIN: SEGMENT SUBSCAN	DISK NO.	RECORDABLE INDICATION YES	NO	EVALUATION REPORT NO.	RESULTS OF EVAL REP.	LIMITED EXAM YES	NO	ANGLES	ANAL.
B2.2.1:C-6	12		X	N/A	N/A		X	45, 60 70	SRB 4401
B2.2.1:D-6	12		X	N/A	N/A		X	45, 60 70	SRB 4401
B2.2.1:E-6	12	X		ER 91-004	Acceptable		X	45, 60 70	SRB 4401
B2.2.1:F-6	12		X	N/A	N/A		X	45, 60 70	GAC 3507
B3.1.1:A-1	20		X	N/A	N/A	X		0, 45 60, 70	GAC 3507
B3.1.1:B-1	20		X	N/A	N/A	X		0, 45 60, 70	GAC 3507
B3.3.1:A-4	13		X	N/A	N/A	X		45, 70	GAC 3507
B3.3.1:A-6	13		X	N/A	N/A	X		45, 60	GAC 3507
B3.3.1:B-4	13		X	N/A	N/A	X		45, 70	SRB 4401
B3.3.1:B-6	13		X	N/A	N/A	X		45, 60	CEM 2783
B3.5.1:A-5	13	X		ER 91-002	Acceptable	X		0, 45 60, 70	WJP 6274
B3.5.1:B-5	13	X		ER 91-002	Acceptable	X		0, 45 60, 70	WJP 6274
B4.2.1:A-6	13		X	N/A	N/A		X	45, 60 70	KJH 3316
B4.2.1:B-6	13		X	N/A	N/A		X	45, 60 70	KJH 3316
B5.1.1:A-5	20		X	N/A	N/A		X	0, 45 60, 70	GAC 3507
B5.1.1:B-5	13	X		ER 91-001	Acceptable		X	0, 45 60, 70	HWS 7635

EXAMINATION SUMMARY TABLE
OCONEE UNIT 1

SIN: SEGMENT SUBSCAN	DISK NO.	RECORDABLE INDICATION YES	RECORDABLE INDICATION NO	EVALUATION REPORT NO.	RESULTS OF EVAL REP.	LIMITED EXAM YES	LIMITED EXAM NO	ANGLES	ANAL.
B5.2.1:A-6	13		X	N/A	N/A		X	45, 60 70	MGH 9017
B5.2.1:B-6	15	X		ER 91-001	N/A		X	45, 60 70	WJP 6274
B6.1.1:A-1	20		X	N/A	N/A	X		0, 45 60, 70	SRB 4401
B6.1.1:B-1	20		X	N/A	N/A	X		0, 45 60, 70	SRB 4401
B6.1.1:C-1	20		X	N/A	N/A	X		0, 45 60, 70	SRB 4401
B6.1.1:D-1	20		X	N/A	N/A	X		0, 45 60, 70	SRB 4401
B6.1.1:E-1	20		X	N/A	N/A	X		0, 45 60, 70	SRB 4401
B6.1.1:F-1	20		X	N/A	N/A	X		0, 45 60, 70	SRB 4401
B6.1.1:G-1	20		X	N/A	N/A	X		0, 45 60, 70	SRB 4401
B6.1.1:H-1	20		X	N/A	N/A	X		0, 45 60, 70	SRB 4401
B6.1.1:I-1	20		X	N/A	N/A	X		0, 45 60, 70	SRB 4401
B6.1.1:J-1	20		X	N/A	N/A	X		0, 45 60, 70	SRB 4401
B6.1.1:K-1	20		X	N/A	N/A	X		0, 45 60, 70	SRB 4401
B6.1.1:L-1	20		X	N/A	N/A	X		0, 45 60, 70	SRB 4401
B6.2.1:A-4	20		X	N/A	N/A	X		60, 70	WJP 6274
B6.2.1:A-6	20		X	N/A	N/A	X		45, 70	WJP 6274

EXAMINATION SUMMARY TABLE
OCONEE UNIT 1

SIN: SEGMENT SUBSCAN	DISK NO.	RECORDABLE INDICATION YES	RECORDABLE INDICATION NO	EVALUATION REPORT NO.	RESULTS OF EVAL REP.	LIMITED EXAM YES	LIMITED EXAM NO	ANGLES	ANAL.
B6.2.1:B-4	20		X	N/A	N/A	X		60,70	WJP 6274
B6.2.1:B-6	20		X	N/A	N/A	X		45,70	WJP 6274
B6.2.1:C-4	20		X	N/A	N/A	X		60,70	WJP 6274
B6.2.1:C-6	20		X	N/A	N/A	X		45,70	GAC 3507
B6.2.1:D-4	12		X	N/A	N/A	X		60,70	GAC 3507
B6.2.1:D-6	12		X	N/A	N/A	X		45,70	GAC 3507
B6.2.1:E-4	12		X	N/A	N/A	X		60,70	GAC 3507
B6.2.1:E-6	12		X	N/A	N/A	X		45,70	GAC 3507
B6.2.1:F-4	20		X	N/A	N/A	X		60,70	GAC 3507
B6.2.1:F-6	20		X	N/A	N/A	X		45,70	GAC 3507
B6.2.1:G-4	20		X	N/A	N/A	X		60,70	GAC 3507
B6.2.1:G-6	20		X	N/A	N/A	X		45,70	GAC 3507
B6.2.1:H-4	20		X	N/A	N/A	X		60,70	WJP 6274
B6.2.1:H-6	20		X	N/A	N/A	X		45,70	WJP 6274
B6.2.1:I-4	20		X	N/A	N/A	X		60,70	WJP 6274
B6.2.1:I-6	20		X	N/A	N/A	X		45,70	WJP 6274

EXAMINATION SUMMARY TABLE
OCONEE UNIT 1

SIN: SEGMENT SUBSCAN	DISK NO.	RECORDABLE INDICATION YES	RECORDABLE INDICATION NO	EVALUATION REPORT NO.	RESULTS OF EVAL REP.	LIMITED EXAM YES	LIMITED EXAM NO	ANGLES	ANAL.
B6.2.1:J-4	20		X	N/A	N/A	X		60,70	WJP 6274
B6.2.1:J-6	20		X	N/A	N/A	X		45,70	GAC 3507
B6.2.1:K-4	20		X	N/A	N/A	X		60,70	GAC 3507
B6.2.1:K-6	20		X	N/A	N/A	X		45,70	GAC 3507
B6.2.1:L-4	20		X	N/A	N/A	X		60,70	WJP 6274
B6.2.1:L-6	20		X	N/A	N/A	X		45,70	WJP 6274
B6.3.1:A-2	17	X		ER 91-006	Acceptable	X		0, 45 60,70	MWK 2915
B6.3.1:B-2	17		X	N/A	N/A	X		0, 45 60,70	GAC 3507
B6.3.1:C-2	17		X	N/A	N/A	X		0, 45 60,70	GAC 3507
B6.3.1:D-2	17		X	N/A	N/A	X		0, 45 60,70	GAC 3507
B6.3.1:E-2	17		X	N/A	N/A	X		0, 45 60,70	GAC 3507
B6.3.1:F-2	17		X	N/A	N/A	X		0, 45 60,70	GAC 3507
B6.3.1:G-2	17		X	N/A	N/A	X		0, 45 60,70	GAC 3507
B6.3.1:H-2	17		X	N/A	N/A	X		0, 45 60,70	GAC 3507
B6.3.1:I-2	17		X	N/A	N/A	X		0, 45 60,70	GAC 3507
B6.3.1:J-2	17		X	N/A	N/A	X		0, 45 60,70	GAC 3507
B6.3.1:K-2	17		X	N/A	N/A	X		0, 45 60,70	GAC 3507

EXAMINATION SUMMARY TABLE
OCONEE UNIT 1

SIN: SEGMENT SUBSCAN	DISK NO.	RECORDABLE INDICATION YES	RECORDABLE INDICATION NO	EVALUATION REPORT NO.	RESULTS OF EVAL REP.	LIMITED EXAM YES	LIMITED EXAM NO	ANGLES	ANAL.
B6.3.1:L-2	17		X	N/A	N/A	X		0, 45 60,70	GAC 3507
B8.2.1:A-5	16	X		ER 91-003	Acceptable	X		0, 45 60,70	CEM 2783
B8.3.1:A-5	20		X	N/A	N/A	X		0, 45 60,70	WJP 6274
B9.1.1:A-6	16		X	N/A	N/A		X	45,60 70	GAC 3507
B9.1.2:A-6	20		X	N/A	N/A		X	45,60 70	WJP 6274
B9.2.1:A-5	20		X	N/A	N/A		X	0, 45 60,70	WJP 6274
B9.3.1:A-5	20		X	N/A	N/A		X	0, 45 60,70	WJP 6274
B10.1.1:A-6	20		X	N/A	N/A	X		45,60 70	KJH 3316
B10.1.2:A-6	12		X	N/A	N/A	X		45,60 70	WJP 6274
B10.1.3:A-6	20		X	N/A	N/A	X		45,60 70	KJH 3316
B10.1.4:A-6	20		X	N/A	N/A	X		45,60 70	GAC 3507
B10.2.1:A-5	20		X	N/A	N/A	X		0, 45 60,70	KJH 3316
B10.2.2:A-5	20		X	N/A	N/A	X		0, 45 60,70	KJH 3316
B10.3.1:A-5	20		X	N/A	N/A	X		0, 45 60,70	KJH 3316
B10.3.2:A-5	20		X	N/A	N/A	X		0, 45 60,70	KJH 3316
B11.1.1:A-3	11	X		ER 91-010	Acceptable	X		0, 45 60,70	MGH 9017

EXAMINATION SUMMARY TABLE
OCONEE UNIT 1

SIN: SEGMENT SUBSCAN	DISK NO.	RECORDABLE INDICATION YES	RECORDABLE INDICATION NO	EVALUATION REPORT NO.	RESULTS OF EVAL REP.	LIMITED EXAM YES	LIMITED EXAM NO	ANGLES	ANAL.
B11.1.1:B-3	11		X	N/A	N/A	X		0, 45 60,70	MGH 9017
B11.1.2:A-3	11		X	N/A	N/A	X		0, 45 60,70	MGH 9017
B11.1.2:B-3	11		X	N/A	N/A	X		0, 45 60,70	MGH 9017
B11.2.1:A-4	11		X	N/A	N/A	X		45,70	SRB 4401
B11.2.1:B-4	11		X	N/A	N/A	X		45,70	WJP 6274
B11.2.1:C-4	11		X	N/A	N/A	X		45,70	CEM 2783
B11.2.1:D-4	11		X	N/A	N/A	X		45,70	SRB 4401
B11.3.1:A-2	11		X	N/A	N/A	X		15,45 70	WJP 6274
B11.3.1:A-3	11		X	N/A	N/A	X		70	MWK 2915
B11.5.1:A-2	11		X	N/A	N/A	X		0, 45	GAC 3507
B11.6.1:A-2	11		X	N/A	N/A		X	45,70	SRB 4401
B11.7.1:A-4	11		X	N/A	N/A		X	45,70	SRB 4401
B12.1.1:A-3	11		X	N/A	N/A	X		0, 45 60,70	GAC 3507
B12.1.1:B-3	11		X	N/A	N/A	X		0, 45 60,70	GAC 3507
B12.1.2:A-3	11		X	N/A	N/A	X		0, 45 60,70	GAC 3507
B12.1.2:B-3	11		X	N/A	N/A	X		0, 45 60,70	GAC 3507

EXAMINATION SUMMARY TABLE
OCONEE UNIT 1

SIN: SEGMENT SUBSCAN	DISK NO.	RECORDABLE INDICATION YES	RECORDABLE INDICATION NO	EVALUATION REPORT NO.	RESULTS OF EVAL REP.	LIMITED EXAM YES	LIMITED EXAM NO	ANGLES	ANAL.
B12.2.1:A-4	11		X	N/A	N/A	X		45,70	GAC 3507
B12.2.1:B-4	11		X	N/A	N/A	X		45,70	GAC 3507
B12.2.1:C-4	11		X	N/A	N/A	X		45,70	GAC 3507
B12.2.1:D-4	11		X	N/A	N/A	X		45,70	GAC 3507
B12.3.1:A-2	11	X		ER 91-011	Acceptable	X		15,45 70	WJP 6274
B12.3.1:A-3	14		X	N/A	N/A	X		70	GAC 3507
B12.5.1:A-2	15		X	N/A	N/A	X		0, 45	SRB 4401
B12.6.2:A-2	11		X	N/A	N/A		X	45,70	CEM 2783
B12.7.1:A-4	11		X	N/A	N/A		X	45,70	WJP 6274
B13.1.1:A-3	12		X	N/A	N/A	X		0, 45 60,70	WJP 6274
B13.1.1:B-3	12		X	N/A	N/A	X		0, 45 60,70	WJP 6274
B13.1.1:C-3	12	X		ER 91-007	Acceptable	X		0, 45 60,70	MGH 9017
B13.1.1:D-3	12	X		ER 91-007	Acceptable	X		0, 45 60,70	WJP 6274
B13.2.1:A-4	7		X	N/A	N/A	X		60	MGH 9017
B13.2.1:B-4	7		X	N/A	N/A	X		60	MGH 9017
B13.2.1:C-4	7		X	N/A	N/A	X		60	MGH 9017

EXAMINATION SUMMARY TABLE
OCONEE UNIT 1

SIN: SEGMENT SUBSCAN	DISK NO.	RECORDABLE INDICATION YES	RECORDABLE INDICATION NO	EVALUATION REPORT NO.	RESULTS OF EVAL REP.	LIMITED EXAM YES	LIMITED EXAM NO	ANGLES	ANAL.
B13.2.1:D-4	7		X	N/A	N/A	X		60	MGH 9017
B13.3.1:A-2	14	X		ER 91-007	Acceptable	X		15,45 70	CEM 2783
B13.4.1:A-3	14		X	ER 91-007	Acceptable	X		70	WJP 6274
B13.5.1:A-2	15		X	N/A	N/A	X		0,45	WJP 6274
B13.6.1:A-2	14	X		ER 91-014	Acceptable		X	45,70	SRB 4401
B13.7.1:A-4	14		X	N/A	N/A		X	45,70	CEM 2783
B14.1.1:A-3	12		X	N/A	N/A	X		0, 45 60,70	MGH 9017
B14.1.1:B-3	12		X	N/A	N/A	X		0, 45 60,70	MGH 9017
B14.1.1:C-3	12	X		ER 91-008	Acceptable	X		0, 45 60,70	MGH 9017
B14.1.1:D-3	12		X	N/A	N/A	X		0, 45 60,70	GAC 3507
B14.2.1:A-4	7		X	N/A	N/A	X		60	SRB 4401
B14.2.1:B-4	7		X	N/A	N/A	X		60	SRB 4401
B14.2.1:C-4	7		X	N/A	N/A	X		60	SRB 4401
B14.2.1:D-4	7		X	N/A	N/A	X		60	SRB 4401
B14.3.1:A-2	11	X		ER 91-008	Acceptable	X		15,45 70	WJP 6274
B14.4.1:A-3	11		X	N/A	N/A	X		70	CEM 2783

EXAMINATION SUMMARY TABLE
OCONEE UNIT 1

SIN: SEGMENT SUBSCAN	DISK NO.	RECORDABLE INDICATION YES	RECORDABLE INDICATION NO	EVALUATION REPORT NO.	RESULTS OF EVAL REP.	LIMITED EXAM YES	LIMITED EXAM NO	ANGLES	ANAL.
B14.5.1:A-2	16		X	N/A	N/A	X		0, 45	SRB 4401
B14.6.1:A-2	11	X		ER 91-015	Acceptable		X	45,70	CEM 2783
B14.7.1:A-4	11		X	N/A	N/A		X	45,70	WJP 6274
B15.1.1:A-3	7		X	N/A	N/A	X		0, 45 60,70	GAC 3507
B15.1.1:B-3	7		X	N/A	N/A	X		0, 45 60,70	GAC 3507
B15.1.1:C-3	7		X	N/A	N/A	X		0, 45 60,70	GAC 3507
B15.1.1:D-3	7		X	N/A	N/A	X		0, 45 60,70	GAC 3507
B15.2.1:A-4	9		X	N/A	N/A	X		60	SRB 4401
B15.2.1:B-4	9		X	N/A	N/A	X		60	SRB 4401
B15.2.1:C-4	9		X	N/A	N/A	X		60	SRB 4401
B15.2.1:D-4	9		X	N/A	N/A	X		60	SRB 4401
B15.3.1:A-2	14	X		ER 91-009	Acceptable	X		15,45 70	WJP 6274
B15.4.1:A-3	14		X	N/A	N/A	X		70	WJP 6274
B15.5.1:A-2	15		X	N/A	N/A	X		0, 45	WJP 6274
B15.6.1:A-2	11		X	N/A	N/A		X	45,70	SRB 4401
B15.7.1:A-4	11		X	N/A	N/A		X	45,70	WJP 6274

EXAMINATION SUMMARY TABLE
OCONEE UNIT 1

SIN: SEGMENT SUBSCAN	DISK NO.	RECORDABLE INDICATION YES	RECORDABLE INDICATION NO	EVALUATION REPORT NO.	RESULTS OF EVAL REP.	LIMITED EXAM YES	LIMITED EXAM NO	ANGLES	ANAL.
B16.1.1:A-3	7		X	N/A	N/A	X		0, 45 60,70	MWK 2915
B16.1.1:B-3	7		X	N/A	N/A	X		0, 45 60,70	MGH 9017
B16.1.1:C-3	9		X	N/A	N/A	X		0, 45 60,70	WJP 6274
B16.1.1:D-3	9	X		ER 91-017	Acceptable	X		0, 45 60,70	WJP 6274
B16.2.1:A-4	9		X	N/A	N/A	X		60	SRB 4401
B16.2.1:B-4	9		X	N/A	N/A	X		60	SRB 4401
B16.2.1:C-4	9		X	N/A	N/A	X		60	SRB 4401
B16.2.1:D-4	9		X	N/A	N/A	X		60	SRB 4401
B16.3.1:A-2	14	X		ER 91-017	Acceptable	X		15,45 70	SRB 4401
B16.4.1:A-3	14		X	N/A	N/A	X		70	GAC 3507
B16.5.1:A-2	15		X	N/A	N/A	X		0, 45	WJP 6274
B16.6.1:A-2	14		X	N/A	N/A		X	45,70	CEM 2783
B16.7.1:A-4	18		X	N/A	N/A		X	45,70	WJP 6274
B17.1.1:A-1	14		X	N/A	N/A	X		0, 45 60,70	SRB 4401
B17.1.1:B-1	14	X		ER 91-012	Acceptable	X		0, 45 60,70	GAC 3507
B17.1.1:C-1	15	X		ER 91-012	Acceptable	X		0, 45 60,70	SRB 4401

EXAMINATION SUMMARY TABLE
OCONEE UNIT 1

SIN: SEGMENT SUBSCAN	DISK NO.	RECORDABLE INDICATION YES	RECORDABLE INDICATION NO	EVALUATION REPORT NO.	RESULTS OF EVAL REP.	LIMITED EXAM YES	LIMITED EXAM NO	ANGLES	ANAL.
B17.1.1:D-1	14	X		ER 91-012	Acceptable	X		0, 45 60,70	CEM 2783
B17.1.2:A-1	14		X	N/A	N/A	X		0, 45 60,70	WJP 6274
B17.1.2:B-1	14	X		ER 91-012	Acceptable	X		0, 45 60,70	CEM 2783
B17.2.1:A-3	15		X	N/A	N/A	X		45,60 70	WJP 6274
B17.2.1:B-3	15		X	N/A	N/A	X		45,60 70	WJP 6274
B17.2.1:C-3	15		X	N/A	N/A	X		45,60 70	WJP 6274
B17.2.1:D-3	15		X	N/A	N/A	X		45,60 70	WJP 6274
B17.3.1:A-4	16		X	N/A	N/A	X		45,60 70	WJP 6274
B17.3.1:B-4	16		X	N/A	N/A	X		45,60 70	WJP 6274
B17.3.1:C-4	15		X	N/A	N/A	X		45,60 70	WJP 6274
B17.3.1:D-4	15		X	N/A	N/A	X		45,60 70	WJP 6274
B17.4.1:A-1	16	X		ER 91-016	Acceptable		X	45	CEM 2783
B17.5.1:A-1	16		X	N/A	N/A		X	45	CEM 2783
B17.6.1:A-1	16		X	N/A	N/A		X	45	WJP 6274
B17.7.1:A-1	16		X	N/A	N/A		X	45	WJP 6274
B18.1.1:A-1	11	X		ER 91-013	Acceptable	X		0, 45 60,70	MWK 2915

EXAMINATION SUMMARY TABLE
OCONEE UNIT 1

SIN: SEGMENT SUBSCAN	DISK NO.	RECORDABLE INDICATION YES	RECORDABLE INDICATION NO	EVALUATION REPORT NO.	RESULTS OF EVAL REP.	LIMITED EXAM YES	LIMITED EXAM NO	ANGLES	ANAL.
B18.1.1:B-1	14		X	N/A	N/A	X		0, 45 60,70	GAC 3507
B18.1.1:C-1	14		X	N/A	N/A	X		0, 45 60,70	GAC 3507
B18.1.1:D-1	14		X	N/A	N/A	X		0, 45 60,70	CEM 2783
B18.1.2:A-1	14		X	N/A	N/A	X		0, 45 60,70	SRB 4401
B18.1.2:B-1	14		X	N/A	N/A	X		0, 45 60,70	GAC 3507
B18.2.1:A-3	18		X	N/A	N/A	X		45,60 70	GAC 3507
B18.2.1:B-3	18	X		ER 91-013	Acceptable	X		45,60 70	WJP 6274
B18.2.1:C-3	18	X		ER 91-013	Acceptable	X		45,60 70	WJP 6274
B18.2.1:D-3	18		X	N/A	N/A	X		45,60 70	WJP 6274
B18.3.1:A-4	16		X	N/A	N/A	X		45,60 70	WJP 6274
B18.3.1:B-4	16		X	N/A	N/A	X		45,60 70	WJP 6274
B18.3.1:C-4	16		X	N/A	N/A	X		45,60 70	WJP 6274
B18.3.1:D-4	16		X	N/A	N/A	X		45,60 70	CEM 2783
B18.4.1:A-1	16		X	N/A	N/A		X	45	MWK 2915
B18.5.1:A-1	16		X	N/A	N/A		X	45	MWK 2915
B18.6.1:A-1	16		X	N/A	N/A		X	45	WJP 6274

EXAMINATION SUMMARY TABLE
OCONEE UNIT 1

SIN: SEGMENT SUBSCAN	DISK NO.	RECORDABLE INDICATION YES	RECORDABLE INDICATION NO	EVALUATION REPORT NO.	RESULTS OF EVAL REP.	LIMITED EXAM YES	LIMITED EXAM NO	ANGLES	ANAL.
B18.7.1:A-1	16		X	N/A	N/A		X	45	WJP 6274

EXAMINATION SUMMARY TABLE

ITEM NUMBER	ID NUMBER	INSP DATE	INSP STATUS	INSP LIMITED	GEO. REF.
B01.011.001	1RPV-WR17	8-17-91	CLR	L	N
B01.011.002	1RPV-WR1A	8-17-91	REC	L	Y
B01.011.003	1RPV-WR1	8-17-91	REC	-	N
B01.011.004	1RPV-WR18	8-19-91	REC	L	Y
B01.012.001	1RPV-A2-WR2	8-18-91	CLR	L	N
B01.012.002	1RPV-A2-WR2A	8-19-91	CLR	L	N
B01.012.003	1RPV-A1-WR2	8-17-91	CLR	-	N
B01.012.004	1RPV-A1-WR2A	8-17-91	CLR	-	N
B01.012.005	1RPV-A10-WR2	8-17-91	REC	L	Y
B01.012.006	1RPV-A10-WR2A	8-17-91	CLR	L	N
B01.021.002	1RPV-WR34	8-27-91	REC	L	N
B01.030.001	1RPV-WR19	8-21-91	REC	L	Y
B03.090.001	1RPV-WR13	8-21-91	REC	L	N
B03.090.002	1RPV-WR13A	8-21-91	CLR	L	N
B03.090.003	1RPV-WR12	8-20-91	REC	L	N
B03.090.004	1RPV-WR12A	8-20-91	REC	L	N
B03.090.005	1RPV-WR12B	8-21-91	CLR	L	N
B03.090.006	1RPV-WR12C	8-21-91	REC	L	N
B03.090.007	1RPV-WR54	8-25-91	REC	L	Y
B03.090.008	1RPV-WR54A	8-25-91	REC	L	Y
B03.090.001A	1RPV-WR13	8-26-91	CLR	L	N
B03.090.002A	1RPV-WR13A	8-23-91	REC	L	Y
B03.090.003A	1RPV-WR12	8-25-91	REC	L	N
B03.090.004A	1RPV-WR12A	8-22-91	REC	L	Y
B03.090.005A	1RPV-WR12B	8-25-91	REC	L	Y
B03.090.006A	1RPV-WR12C	8-25-91	REC	L	Y
B03.090.007A	Exam Not Performed due to Flow Restrictor (1)				
B03.090.008A	Exam Not Performed due to Flow Restrictor (2)				
B03.100.001	1RPV-WR13	8-26-91	CLR	L	N
B03.100.002	1RPV-WR13A	8-23-91	CLR	L	N
B03.100.003	1RPV-WR12	8-25-91	REC	L	Y
B03.100.004	1RPV-WR12A	8-22-91	REC	L	Y
B03.100.005	1RPV-WR12B	8-25-91	REC	L	Y
B03.100.006	1RPV-WR12C	8-25-91	REC	L	N
B03.100.007	Exam Not Performed due to Flow Restrictor (1)				
B03.100.008	Exam Not Performed due to Flow Restrictor (2)				
B05.010.001A	1RPV-WR53	8-26-91	REC	-	Y
B05.010.001B	1RPV-WR53	8-26-91	CLR	-	N
B05.010.002A	1RPV-WR53A	8-26-91	CLR	-	N
B05.010.002B	1RPV-WR53A	8-26-91	CLR	-	N
B09.011.016	1PDA1-9	8-24-91	REC	-	Y
B09.011.032	1PDA2-9	8-22-91	REC	-	N
B09.011.048	1PDB1-9	8-23-91	CLR	-	N
B09.011.064	1PDB2-9	8-23-91	CLR	-	N
B09.011.065	1PHA-1	8-22-91	CLR	-	N
B09.011.077	1PHB-1	8-23-91	CLR	-	N
B09.011.090	1-53A-2.3-43L	8-26-91	CLR	-	N
B09.011.100	1-53A-1.2-1L	8-26-91	CLR	-	N

Legend: CLR = Clear , REC = Recordable
- = Not Limited, L = Limited
N = No Geometric Indications, Y = Geometric Indications

(1) Exam satisfied by B03.090.007
(2) Exam satisfied by B03.090.008

Form 01077 (R7-89)

FORM 101.1	REVISION 13

CERTIFICATION OF ENGINEERING CALCULATION

STATION AND UNIT NUMBER Oconee Nuclear Station Units 1, 2 & 3

TITLE OF CALCULATION In-Service Inspection Indication Evaluation

CALCULATION NUMBER OSC-4547

ORIGINALLY CONSISTING OF:

PAGES 1 THROUGH 4

TOTAL ATTACHMENTS 2 TOTAL MICROFICHE ATTACHMENTS None

TOTAL VOLUMES 1 TYPE I CALCULATION/ANALYSIS YES ☐ NO ☒

TYPE I REVIEW FREQUENCY N/A

THESE ENGINEERING CALCULATIONS COVER QA CONDITION 1 ITEMS. IN ACCORDANCE WITH ESTABLISHED PROCEDURES, THE QUALITY HAS BEEN ASSURED AND I CERTIFY THAT THE ABOVE CALCULATION HAS BEEN ORIGINATED, CHECKED OR APPROVED AS NOTED BELOW:

ORIGINATED BY R. H. Benoit DATE 11-15-91

CHECKED BY Joan Jan Kim DATE 11-15-91

APPROVED BY K K Cope DATE 11-18-91

ISSUED TO TECHNICAL SERVICES DIVISION _____ DATE _____

RECEIVED BY TECHNICAL SERVICES DIVISION _____ DATE _____

MICROFICHE ATTACHMENT LIST: ☐ Yes ☒ No SEE FORM 101.4

REV. NO.	CALCULATION PAGES (VOL)			ATTACHMENTS (VOL)			VOLUMES		ORIG	CHKD	APPR	ISSUE DATE
	REVISED	DELETED	ADDED	REVISED	DELETED	ADDED	DELETED	ADDED	DATE	DATE	DATE	REC'D DATE

Form 101.2 Revision 1
26164 (R9-89)

File/Calculation No. OSC-4547

REVISION DOCUMENTATION SHEET

Revision Number	Review Frequency Changed Yes/No	Revision Description
0	No	Original Issue

GENERAL CALCULATION WORKSHEET

SUBJECT: ISI Indication Evaluation

Problem Statement: The purpose of this calculation is to evaluate indications found during In-Service Inspection of piping components and equipment.

QA Condition: This calculation covers QA Condition 1 items.

Design Method: Indication reports are to be evaluated using methods consistent with those described in Section XI of the ASME Code.

Applicable Codes: 1980 ASME Boiler and Pressure Vessel Code

Other References:
1) B&W Calculation 32-1127466-00, 8/18/81
2) OSC-1816, Rev. D3
3) "Flaw Evaluation Procedures: ASME Section XI", EPRI NP-719-SR, August, 1978
4) DPC forms NDE UT-2A, NDE UT-3A for weld 1PZR-WP4, 9/3/91

Attachments:
1) B&W Calculation 32-1127466-00, 8/18/81
2) DPC forms NDE UT-2A. NDE UT-3A for weld 1PZR-WP4, 9/3/91

REV	PERF	DATE	CHKD	DATE
0	RHB	11-14-91	MD	11-15-91

STATION/UNIT Oconee-1

CALC NO. OSC-4547

PAGE 1

Indication 1PZR-WP4

Recent evaluation of indication #200 in Pressurizer shell for Oconee 1 indicates that a much larger flaw exists at this location. The size of this larger indication is $\ell = 2.9$ inches and $a = 0.7$ inches. The flaw was previously evaluated in B&W calculation 32-1127466-00. Section XI of the 1980 ASME code will be used for the evaluation. See Ref. 4 (Attached) for current survey data.

The pressurizer material is SA516 Gr 70 with $S_y = 38$ ksi. Minimum wall thickness is 6 3/16 inches. This information is found in the pressurizer stress report, OSC-1816. The previous evaluation of this flaw indicated that the actual shell thickness at the flaw location is 7 inches, which will be used here. Stresses at the flaw location will also be used from the B&W report. These stresses are for normal operating conditions only. The pressurizer stress report does not show stress calculations for upset or faulted conditions at the flaw location.

$\ell = 2.9$" $\quad a/\ell = 0.24$

$a = 0.70$" $\quad a/t = 0.10$

$t = 7.0$"

$\Delta\sigma_m = 27.128$ ksi

$\Delta\sigma_b = 6.446$ ksi

$\sigma_{ys} = 38.0$ ksi

$(\sigma_m + \sigma_b)/\sigma_{ys} = 0.88$

$\Delta\sigma_m$ & $\Delta\sigma_b$ are from B&W calculation 32-1127466-00 (stresses used in determination of these ranges are from OSC-1816)

The stress intensity factor, K_I, is calculated per article A-3000 of ASME Section XI.

$Q = 1.26$ from Figure A-3300-1

$M_m = 1.1$ from Figure A-3300-3

$M_b = 0.92$ from Figure A-3300-5

$$K_I = \sigma_m M_m (\pi)^{1/2} \left(\frac{a}{Q}\right)^{1/2} + \sigma_b M_b (\pi)^{1/2} \left(\frac{a}{Q}\right)^{1/2}$$

$$= \left[(27.128)(1.1) + (6.446)(.92)\right](\pi)^{1/2}\left(\frac{0.70}{1.26}\right)^{1/2}$$

$$= 47.258 \text{ psi in}^{1/2}$$

This value of K_I is the stress intensity factor due to pressure and temperature so it is also the stress intensity range (ΔK_I) for normal operating conditions. ΔK_I can also be expressed as shown below.

$$\Delta K_I = (D_1 + D_2)(a)^{1/2}$$

$$D_1 = \Delta\sigma_m M_m \left(\frac{\pi}{Q}\right)^{1/2} = 47.119 \text{ ksi}$$

$$D_2 = \Delta\sigma_b M_b \left(\frac{\pi}{Q}\right)^{1/2} = 9.364 \text{ psi}$$

(Ref: "Flaw Evaluation Procedures ASME Section XI", EPRI NP-719-SR, Aug. 1978 p. F-70

The final flaw size a_f can be expressed as shown below. This is derived from equation (1) of A-4300 ($da/dN = C_0(\Delta K_I)^n$) by integration. This is also shown in the EPRI report referenced above.

$$a_f = \left[a_i^{\left(\frac{2-n}{2}\right)} + \left(\frac{2-n}{2}\right) C_0 (D_1 + D_2)^n \Delta N\right]^{\left(\frac{2}{2-n}\right)}$$

where D_1 and D_2 are as shown above, $n = 3.726$ and $C_0 = 0.3795 \times 10^{-9}$ from Figure A-4300-1 and N is 240 from the pressurizer stress report.

$$a_f = \left[(0.70)^{-0.863} + (-0.863)(0.3795 \times 10^{-9})(47.119 + 9.364)^{3.726}(240)\right]^{-1.159}$$

$$= 0.90 \text{ inches}$$

(Verify a_f by reading da/dN from Figure A-4300-1 and multiplying by N then adding to a_i, da/dN ~ 700×10^{-6} inches/cycle which results in a_f = 0.87 inches.)

Recalculate K_I using final flaw size: (as before)

$a/\ell = .9/2.9 = 0.31$

$a/t = .9/7.0 = 0.13$

$Q = 1.5$ from Figure A-3300-1

$M_m = 1.1$ from Figure A-3300-3

$M_b = 0.87$ from Figure A-3300-5

$\sigma_m = 27.128$ ksi
$\sigma_b = 6.446$ ksi
} use bending & membrane stress ranges shown on previous page

$$K_I = \left[(27.128)(1.1) + (6.446)(0.87)\right](\pi)^{1/2}\left(\frac{.90}{1.50}\right)^{1/2}$$

$$= 48.669 \text{ ksi-in}^{1/2}$$

The acceptance criteria is $K_{Ia} > \sqrt{10}\, K_I$ with K_{Ia} set equal to 200 per B&W calculation. (See also IWB-3600 of ASME Code.)

$$\sqrt{10}\, K_I = (10)^{1/2}(48.669) = 153.905 \text{ ksi-in}^{1/2} < 200$$

Therefore the flaw will be acceptable.

DUKE POWER COMPANY

Form 00184 (R4-88)

Station _____ Unit _____ Rev. _____ File No. _____ Sheet _____ Of _____

Subject _____

_____ By _____ Date _____

Prob No. _____ Checked By _____ Date _____

Attachments

CALCULATION DATA/TRANSMITTAL SHEET

DOCUMENT IDENTIFIER

CALC. 32 - [redacted] - 01

TRANS. 86 - _____ - _____

TYPE: ___RESEARCH & DEVELOPMENT ___SAFETY ANALYSIS REPORT ___NUC. SERV. INPUT ___DESIGN ROUT. ___DESIGN VERIF. ✓OTHER

TITLE DUKE 10 YEAR ISI PRESSURIZER INDICATION

PREPARED BY W.L. REDD REVIEWED BY G.L. WEATHERLY

TITLE PRINCIPAL ENGR DATE 9/4/81 TITLE SR. ENGR DATE 9/10/81

PURPOSE:

TO SHOW THAT WHEN THE THICKNESS OF THE BASE METAL, IE., 7.3 - .1875 = 7.1125, IS USED IN ACCORDANCE WITH SECTION XI, A-2500 (b), THE FLAWS ARE ACCEPTABLE.

SUMMARY OF RESULTS (INCLUDE DOC. ID'S OF PREVIOUS TRANSMITTALS & SOURCE CALCULATIONAL PACKAGES FOR THIS TRANSMITTAL)

SINCE THE ONLY PLACE "π" OCCURS IN THE CALCULATIONS IS FOR DETERMINING M_m AND M_b AND BECAUSE THE INCREASE IN a/t IS ONLY 3% THE EFFECTS ARE NEGLIGIBLE AND DOES NOT AFFECT THE RESULTS

AH. 1

Cal# OSC-4547
By: RHB Date 11-14-91
Ck: AWD Date 11-15-91
Page 1 Rev 0

DISTRIBUTION:

CALCULATION DATA/TRANSMITTAL SHEET

DOCUMENT IDENTIFIER CALC. 32 - 1127466 - 00

TRANS. 86 - _____ - _____

TYPE: ___RESEARCH & DEVELOPMENT ___SAFETY ANALYSIS REPORT ___NUC. SERV. INPUT ___DESIGN REQT. ___DESIGN VERIF. X OTHER

TITLE DUKE 10 YEAR ISI PRESSURIZER INDICATION

PREPARED BY W.L. REDD REVIEWED BY A L Weatherly

TITLE PRINCIPAL ENGR DATE 8-17-81 TITLE SR ENGR DATE 8-18-81

PURPOSE:

TO VERIFY THE ACCEPTABILITY OF THE INDICATION FOUND IN THE PRESSURIZER, IN THE VICINITY OF THE HEATER BUNDLE, WITHOUT REPAIR.

SUMMARY OF RESULTS (INCLUDE DOC. ID'S OF PREVIOUS TRANSMITTALS & SOURCE CALCULATIONAL PACKAGES FOR THIS TRANSMITTAL).

THE FLAWS ARE ACCEPTABLE BY SECTION XI ANALYSIS AND DO NOT REQUIRE REPAIR

AH. 1

Cal# OSC-4547
By: RHB Date 11-14-91
Ck: JWD Date 11-15-91
Page 2 Rev 0

DISTRIBUTION

As shown in Fig. 5 the indication is between points 4 and 5. This area is represented by elements 33 through 38 p. C-15, Ref 2. Pressure stresses are taken for these whereas thermal stresses are from p B-5-17 (HU) and p. B-5-18 (CD).

σ_{INSIDE}	= −6.243	$\sigma_{OUTSIDE}$	= 2.895	} Thermal range
	18.331		−7.786	
	24.574		10.681	
σ_i	= 9.0	σ_i	= 10.0	} Press
	33.574		20.681	

$\Delta\sigma_m = 27.128$

$\Delta\sigma_b = 6.446$

$$a_{f_1} = \left[(1.075)^{-0.963} - 5.888\times10^{-8}\,(1.269\times27.128 + .923\times6.446)^{3.726}\right]^{-1.1587}$$

$= 1.156$

$a_{f_2} = .847$

AH. 1

Cal# OSC-4547
By: RHB Date 11-14-91
Chk: WD Date 11-15-91
Page 3 Rev D

	FROJ NO	CONT NO
SUBJECT	DWG NO	FILE NO

ACCEPTANCE CRITERIA

REF 1, IWB-3600(a) PROVIDES AN ACCEPTANCE CRITERIA BASED ON FLAW SIZE. HOWEVER, AN ALTERNATIVE CRITERIA BASED ON STRESS INTENSITY FACTOR IS GIVEN IN ASME LETTER DATED JUNE 11, 1974 (ASME FILE # BC-74-188) AND IS

$$K_{Ia} > \sqrt{10}\, K_I$$

OR

$$K_{Ia}/K_I > 3.16$$

$\sigma_{max})_i = 18.331 + 9.0 = 27.331$

$\sigma_{max})_o = -7.786 + 10.0 = 2.214$

$\sigma_m = 14.8$

$\sigma_b = 12.6$

$K_{I_i} = (1.269 \times 14.8 + .923 \times 12.6)\sqrt{1.156} = 32.7$

$K_{I_o} = (1.269 \times 14.8 + .981 \times 12.6)\sqrt{.847} = 28.7$

$$\frac{K_{Ia}}{K_I} = \frac{200}{32.7} = 6.12 > 3.16 \quad \text{OK}$$

A# 1

Cal# DSC-4547
By: RHB Date 11-14-91
Ck: AWD Date 11-15-91
Page 4 Rev 0

* ASSUMING $RT_{NDT})_{INITIAL} = 10°F$ AND $T_f > 190°$

CUSTOMER | PROJ NO. | CONT. NO
SUBJECT | DWG NO. | FILE NO.

REFERENCES

1. ASME B&PV CODE, SECTION XI, 1977 EDITION, NO ADDENDA

2. B&W STRESS ANALYSIS "PRESSURIZER SHELL ANALYSIS FOR MECHANICAL AND THERMAL LOADS," REPORT #7, 12-7-73.

3. TELECOPY FROM GEORGE STROMER TO TOM SMITH, 8-13-81.

FIG. 1 32-127466-00

130

Evaluation per Notch Amplitude, ISI=120 REV. 16

$A = (I_a/N_a) D_n$ Notch Amplitude (N_a) = 80% . ℓ = 2.2 inches

Indication Amplitude (I_a) = 316% ← 316%

Notch Depth (D_n) = .14 inch.

$A = (316/80) \times .14 =$

A = .553 inch.

.553

(MK 3) SUR. 1

(MK 4 SUR. 2

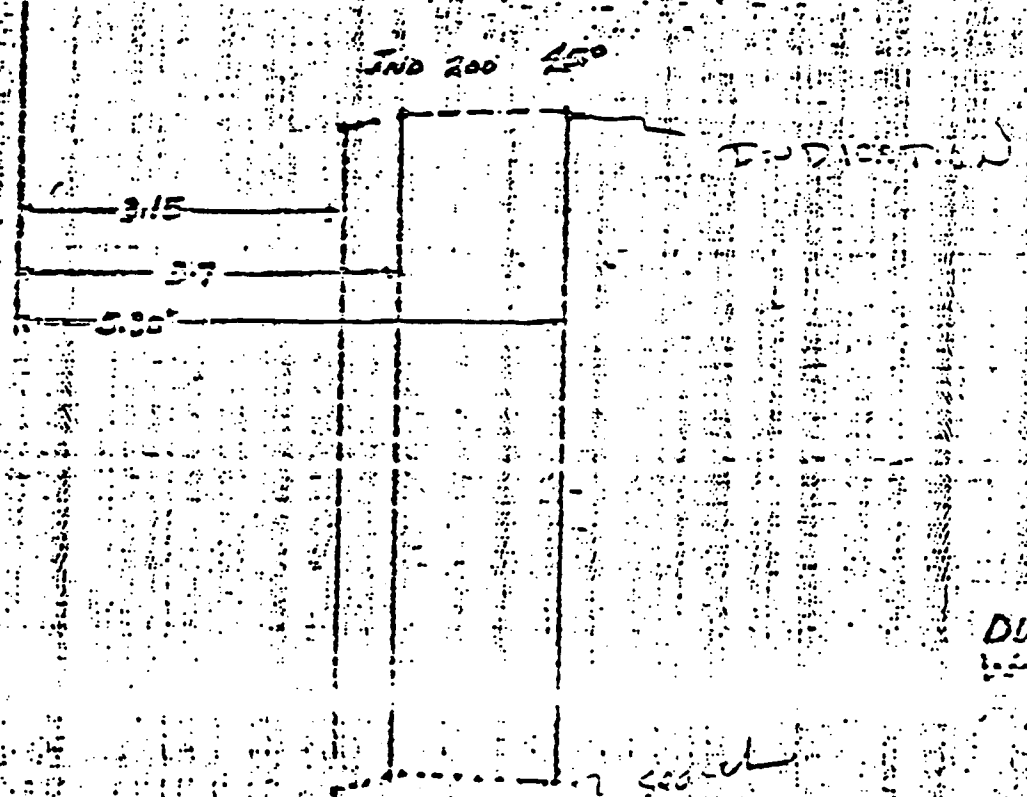

DUKE POWER CO.

Att. F

Cal#	DSC-4547		
By:	RHB	Date	11-14-91
Ck:	HVD	Date	11-15-91
Page	6	Rev	0

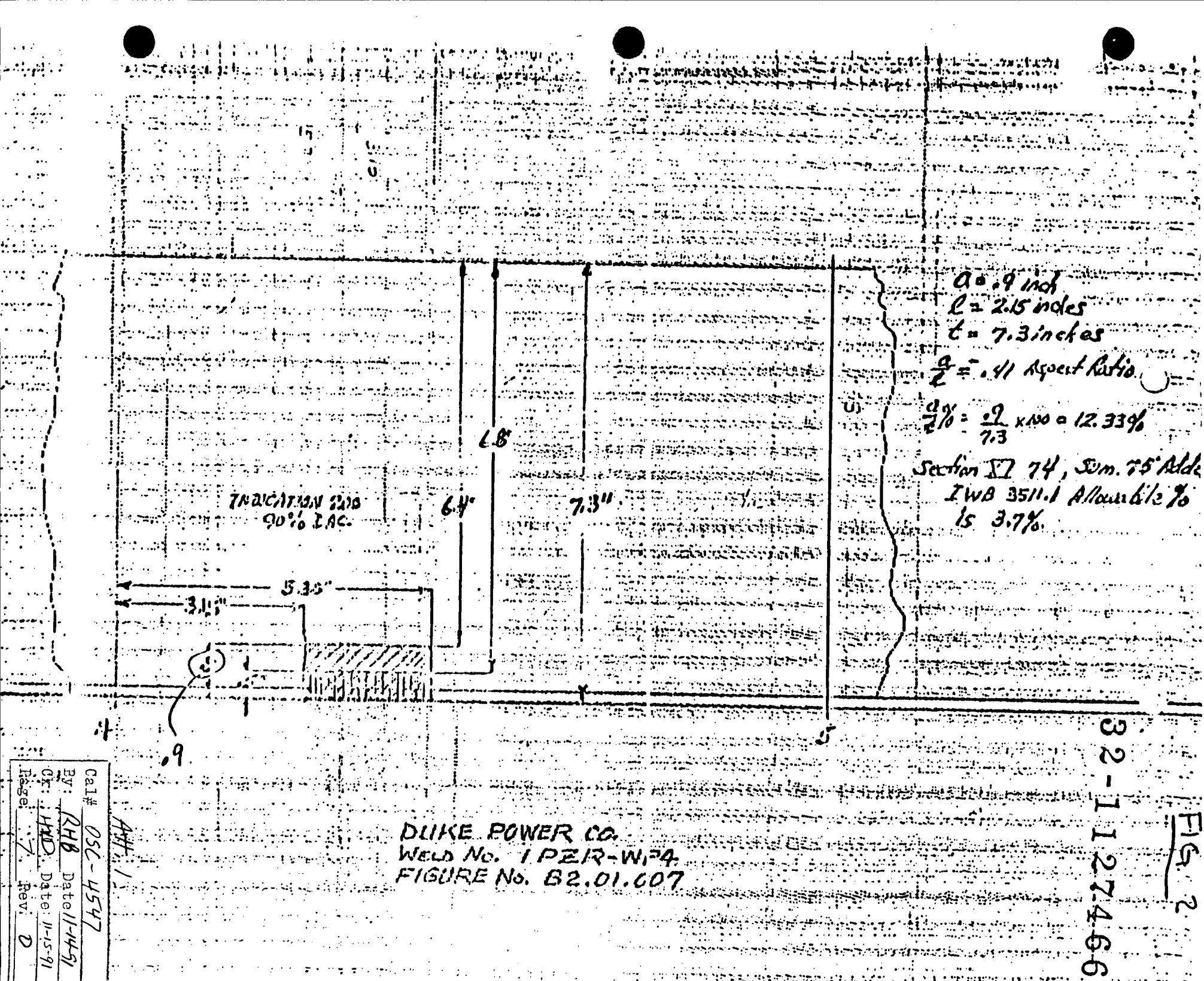
a = .9 inch
ℓ = 2.15 inches
t = 7.3 inches
a/ℓ = .41 Aspect Ratio
a/t % = .9/7.3 x 100 = 12.33%
Section XI 74, Sum. 75 Addenda
IWB 3511.1 Allowable % is 3.7%.
INDICATION 210
90% DAC.
6.4"
7.3"
5.3"
3.1"
.9
DUKE POWER CO.
WELD No. 1 PER-W-24
FIGURE No. B2.01.007
Cal# OSC-4547
By: RHB Date 11-14-91
Ck: HMD Date 11-15-91
Page 7 Rev. 0
32-1127466
FIG. 2

FIG. 3

32-1127456-00

Evaluation per Notch Amplitude ISI 130 Rev 16.

A = (Ia/Na) Dn Indication Amplitude (Ia) = 80%
Notch Amplitude (Na) = 80%
Notch depth (Dn) = .14

$A = \left(\frac{80}{80}\right) \times .14$

A = 1.4 inch.

ℓ = 1.6 inches.

SUR. 1

4 5

SUR. 2

Flaw location.

4.10"

4.75"

5.70"

5.10

Search unit pos.

IND 600

AH.1

Cal# 052-4547
By: RHB Date 11-14-91
Ck: HVD Date 11-15-91
Page 8 Rev 0

DUKE POWER CO.

Figure No.:

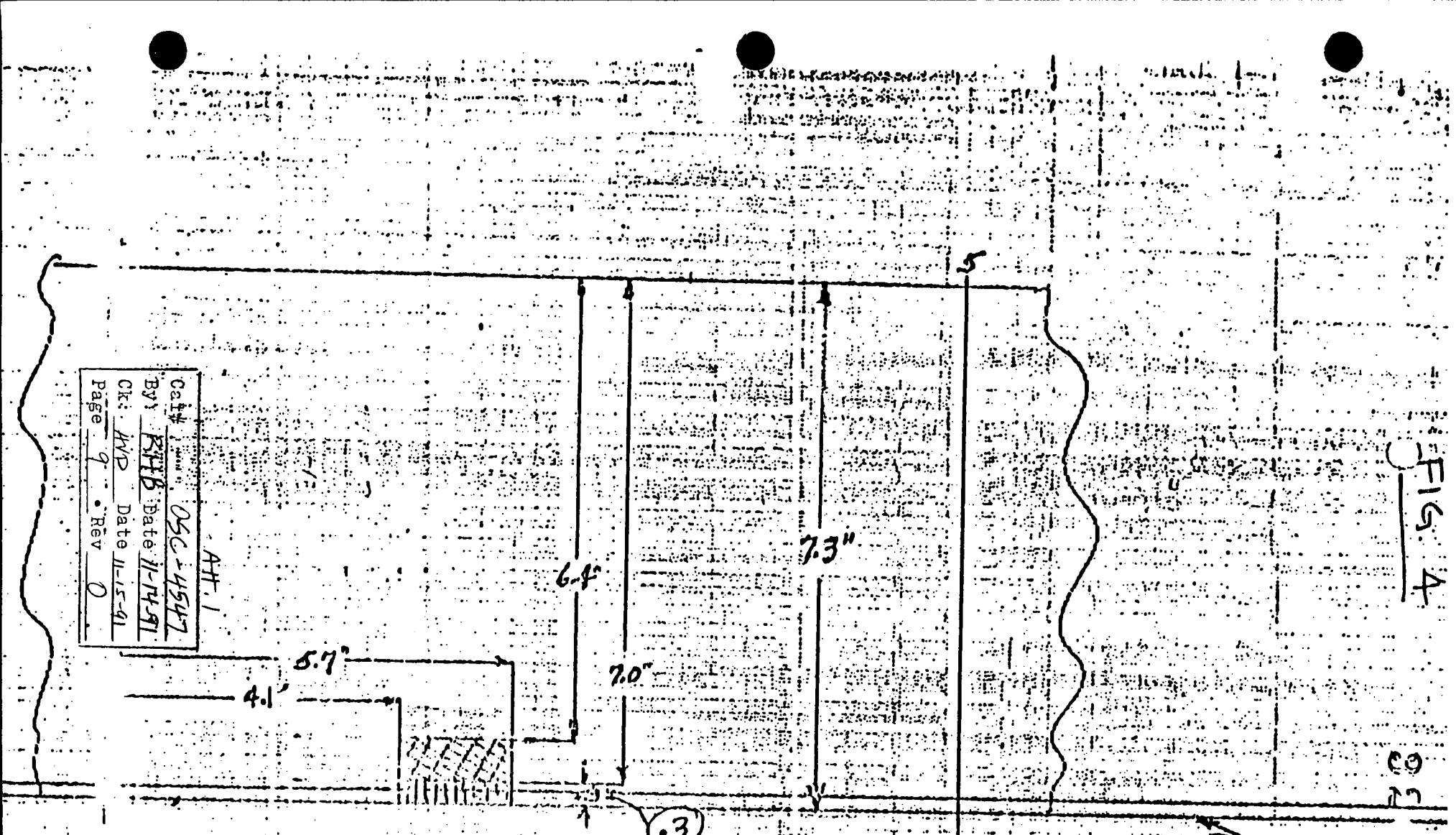

FIG. 4

INDICATION 600 (35°)

ℓ = 1.6 inches. t = 7.3"

a = .9 inches

$\frac{a}{\ell}$ = .9/1.6 = .56 Aspect Ratio

$\frac{a}{t}$% = .9/7.3 x100 = 12.33%

*INB 3511.1 Allows 3.7% Surface flaw

DUKE POWER Co.
WELD # 1PER-WP4
FIGURE # B2.01.007

DUKE POWER COMPANY

ULTRASONIC EXAMINATION DATA SHEET FOR PLANAR REFLECTORS

Exam Start: 14:05 | FORM NDE UT-2A

Exam Finish: 16:10 | Revision 1

Station: OCONEE | Unit: 1 | Component/weld ID: 1PZR-WP4 | Date: 9/3/91

Nominal Material Thickness (in./ dia.): 6.188 | Weld Length (in.): 24 | Surface Temperature: 80.4 deg F

Surface Condition: GROUND | Lo: INTERSECT CIRC SEAM | Pyrometer S/N: 32597 cal due: 11/28/91

Examiner: [signature] David K [signature] II II / R.B. Childers Level: II

Examiner: [signature] Level: I

Calibration sheet No: 911068,911069 911070

SCANS: 45 [■] +14 dB

45T [■] +14 dB 60 [ ] dB

0 [■] +32 dB 60T [ ] dB

Other: 35 dB 14

Configuration: CIRC

>>>>> Flow >>>>>

PZR SHELL to HT BUNDLE

Procedure No: NDE 620 NDE 640 Rev: 0 0 F/C: 91-06 1,91-07

Applies to NDE-680 only

Skew angle: N/A

Applies only to NDE-620, 640 and 680

IND NO.	∠	Max % dac	W Max	L Max	MP Max	L1 20%dac HMA 50%dac	L2 20%dac HMA 50%dac	W1 20%dac HMA 50%dac	W2 20%dac HMA 50%dac	Mp1 20%dac HMA 50%dac	Mp2 20%dac HMA 50%dac	Beam Dir	Exam Surf.	Scan	Damps
1	45	100	9.4	51.75	9.4	51.5	54.0	9.1	9.9	8.89	9.49	2	1	AXIAL	NO
			9.4	52.65	9.2			9.1	9.9	8.89	9.5				
			9.4	53.55	9.2			9.1	9.9	8.89	9.54				
2	35	90	7.1	53.75	8.18	53.25	54.375	6.8	7.5	8.03	8.4	2	1	AXIAL	NO

Remarks:

Limitations: see NDE-UT-4 [ ] None: [■] ACCEPTABLE/NO RECORDABLE INDICATIONS: [ ] sheet 1 of 2

Reviewed By: D.C. Robinson Level: II Date: 9-6-91

Authorized Inspector: R.F. Elgin Ant I/Ant II Date: 9-15-91

Item No: B02.011.003

A#. 2

Cal# OSC-4547
By: RHB Date 11-14-91
Ck: [illegible] Date 11-15-91
Page 1 Rev 0

DUKE POWER COMPANY

ULTRASONIC EXAMINATION DATA SHEET FOR LAMINAR REFLECTORS

Exam Start: 14:05 | Exam Finish: 14:35 | FORM NDE U. 3A | Revision 1

Station: OCONEE | Unit: 1 | Component/weld ID: 1PZR-WP4 | Date: 9-3-91

Nominal Material Thickness (in.): 6.188 | Weld Length (in.): 24 | Surface Tepmperature: 80.4 Deg F

Surface Condition: GROUND | Lo: INTERSECT CIRC SEAM | Pyrometer S/N: 32597 cal due: 11/28/91

Examiner: Richard B. Childers Level: II

Examiner: JJ Bibb Level: II

Procedure no: NDE 640 Rev: 0 F/C: 1/91-07

Calibration sheet No: 911069

Configuration: CIRC

>>>>>> Flow >>>>>>

Mp4

PZR SHELL to HT BUNDLE

IND NO.	∠	Ampl ≥ rem BW LOB	L1 ≥ rem BW LOB	W1 ≥ rem BW LOB	Mp1 ≥ rem BW LOB	W2 ≥ rem BW LOB	Mp2 ≥ rem BW LOB	L2 ≥ rem BW LOB	W1 ≥ rem BW LOB	Mp1 ≥ rem BW LOB	W2 ≥ rem BW LOB	Mp2 ≥ rem BW LOB	Exam Surf.	Damps
1	0	40	47.2	3.9	6.281	4.9	6.281	49.2					1	NO

L	W1	Mp1	W2	Mp2	L	W1	Mp1	W2	Mp2

L	W1	Mp1	W2	Mp2	L	W1	Mp1	W2	Mp2

A-4, 2

Remarks:

Limitations: see NDE-UT-4 ☐ None: ☑ | ACCEPTABLE/NO RECORDABLE INDICATIONS: ☐ | sheet 2 of 2

Reviewed By: P.C. Robinson Level: II Date: 9-6-91

Authorized Inspector: R F Elgin ANI/HNDE Date 9-15-91

Item No: B02.011.003

Cal# OSC-4547 By: RHB Date 11-14-91 Ck: JWD Date 11-15-91 2 Rev 0

Form 00184 (RH-88)

DUKE POWER COMPANY

Station OCONEE Unit 1 Rev. ____ File No. ____ Sheet 1 Of 4

Subject 1PZR-WP4

By J.J. McAulle Date ____

Prob No. B 02.011.003 Checked By ____ Date ____

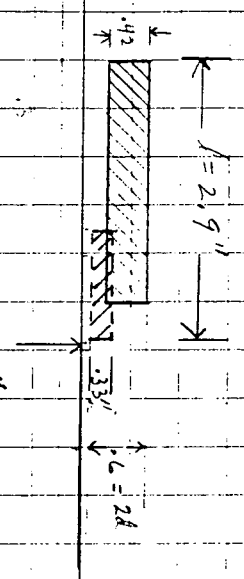

S = .1"
2d = .6" d = .3
.3 x .4 = .12
S < .4d therefore flaw in surface connected
a = .6 + .1 = .7
a/l = .7/2.9 = .24 aspect ratio
a/t% = 10% - Rejectable

CLAD

T = 7"
#1 (200) α = 45 TWD = (9.5 - 8.9) x cos 45

PARALLEL PLANAR FLAWS

James J. McAulle III Level III

Att. 2

Cal#	OSC-4547		
By:	RHB	Date	11-14-91
Ck:	HYD	Date	11-15-91
Page	3	Rev	0

Form 01077 (R7-89)

FORM 101.1	REVISION 13

CERTIFICATION OF ENGINEERING CALCULATION

STATION AND UNIT NUMBER Oconee Nuclear Station Units 1, 2 & 3

TITLE OF CALCULATION Reactor Coolant Loop Piping Stress Report

CALCULATION NUMBER OSC-1522

ORIGINALLY CONSISTING OF:

PAGES — THROUGH —

TOTAL ATTACHMENTS — TOTAL MICROFICHE ATTACHMENTS —

TOTAL VOLUMES 6 TYPE I CALCULATION/ANALYSIS YES ☐ NO ☒

D9 TYPE I REVIEW FREQUENCY —

THESE ENGINEERING CALCULATIONS COVER QA CONDITION 1 ITEMS. IN ACCORDANCE WITH ESTABLISHED PROCEDURES, THE QUALITY HAS BEEN ASSURED AND I CERTIFY THAT THE ABOVE CALCULATION HAS BEEN ORIGINATED, CHECKED OR APPROVED AS NOTED BELOW:

ORIGINATED BY See Previous Form 101.1 DATE —

CHECKED BY — DATE —

APPROVED BY — DATE —

ISSUED TO TECHNICAL SERVICES DIVISION — DATE —

RECEIVED BY TECHNICAL SERVICES DIVISION — DATE —

MICROFICHE ATTACHMENT LIST: ☑ Yes ☐ No SEE FORM 101.4

REV. NO.	CALCULATION PAGES (VOL)			ATTACHMENTS (VOL)			VOLUMES		ORIG	CHKD	APPR	ISSUE DATE
	REVISED	DELETED	ADDED	REVISED	DELETED	ADDED	DELETED	ADDED	DATE	DATE	DATE	REC'D DATE
D8	Report #5 completely revised (Volume 2)	—	36 thru 42 (Section B Volume 1)	—	—	M17, M18 M19 (Report #6 Volume 3)	—	—	RJM 1-22-90	fcH 1-25-90	RLC 1-29-90	RJM 2-2-90
↓	1 (Report #11 Volume 4)	—	3.1 thru 3.4 (Section A Volume 1)						↓	↓	↓	↓
↓			195 thru 233 (Report #6 Volume 3)						↓	↓	↓	CEB 2/20/90
D9	25, 33 (Section A Volume 1)	—	3.5, 3.6 (Section A Volume 1)	—	—	Att. No. 1 (Volume 6)	—	Vol. 6	RJM 4-29-91	[illegible] 04-29-91	RLC 4-29-91	HVD 9-23-91
D10	—	—	—	—	—	ATT. No. 2 (vol. 6)	—	—	HVD 8-29-91	MFL 8/29/91	RLC 8-29-91	—
D11	5-28 of ATT. 2 (vol. 6)	—	11.1, 11.2, 26-32 of ATT. 2 (vol. 6)	ATT. No. 2 (vol. 6)	—	—	—	—	HVD 9-13-91	MFL 9/16/91	RLC 9-17-91	CEB 9/27/91

4002

Form 101.2 Revision 1
26164 (R9-89)

File/Calculation No. OSC-1522

REVISION DOCUMENTATION SHEET

Revision Number	Review Frequency Changed Yes/No	Revision Description
D10	NO	REVISED TO EVALUATE THE ACCEPTABILITY OF FLAW INDICATION PER PIR # 1-091-0085. THE FLAW INDICATION ON THE SUCTION PIPING FOR IBI REACTOR COOLANT PUMP WAS DETECTED DURING REFUELING OUTAGE EOC-13 OF UNIT 1. THE EVALUATION IS DOCUMENTED IN ATTACHMENT No. 2 TO VOLUME 6 OF THIS CALCULATION OSC-1522.
D11	NO	REVISED TO INCORPORATE NEW DATA FROM Q.A ON FLAW SIZE AND INCORPORATED B&W COMMENTS ON REV. D10 OF CALCULATION (ATT. 2 TO VOL. 6)

4007 229

GENERAL CALCULATION WORKSHEET

SUBJECT: FLAW INDICATION EVALUATION

INTRODUCTION:

During the refueling outage EOC-13 of unit 1, Oconee Nuclear Station, an indication was detected on the suction piping for 1B1 Reactor Coolant Pump.

PROBLEM:

The Ultrasonic Examination detected a flaw indication of 1.6" long and 0.42" deep on TST item ~~# B09011.036,~~ weld ~~# 1PTB1-5.~~ This indication exceeds allowable flaw indication standards of IWB-3500.

ISI B09.011.036 1PTB1-5 ADH 4/21/91

SOLUTION:

Since the flaw indication was detected during an inservice inspection, Appendix A of Section XI of ASME Code 1980 edition is used to determine the acceptablility of the flaw. This indication is a surface connected flaw with a =0.42", l = 1.6" and measured wall thickness at the flaw indication is 3.0" including 1/4" clad.

D11

Loads at the flaw location are obtained from calculation OSC-1522 (B&W Calc. No. 620-0003-50), B&W telecopies included as pages 9, 10 in this attachment, and stresses due to these loading conditions are calculated. The loading forms considered in the calculation are pressure stresses, gravity stresses, thermal expansion stresses, seismic stresses, and LOCA stresses. Thermal gradient stresses from Delta-T1 and Delta-T2 are negligible because of the slow heatup and cooldown transients. And it's also per B&W

REV	PERF	DATE	CHKD	DATE
D11	JWD	9-13-91	MFL	9-16-91

PROBLEM NO._____

STATION/UNIT OCONEE/1

CALC NO. OSC-1522

PAGE 1

GENERAL CALCULATION WORKSHEET

SUBJECT: FLAW INDICATION EVALUATION

calculation No. 620-0003-50, there are no T_a - T_b stresses since there is no material discontinuity at flaw location.

The stress intensity factor for the flaw model is calculated by the equation (Appendix A of Ref. 1):

$$K_I = s_m M_m (PI)^{½} (a/Q)^{½} + s_b M_b (PI)^{½} (a/Q)^{½} \quad (1)$$

Where,

s_m, s_b: membrane and bending stress, psi.
a : flaw depth of surface flaw.
Q : flaw shape parameter as determined from Fig. A-3300-1(Ref. 1)
M_m : correction factor for membrane stress.
M_b : correction factor for bending stress.

Since the factor M_m is always greater than M_b, it will used for all stresses in the equation (1). It's not only conservative but simplifies the calculation.

a = 0.42"
l = 1.6"
a/l = 0.26
t = 2.75"
outside diameter, D = 34.00"
inside diameter, d = 28.50"
operating pressure, P = 2185 psi
operating temperature, T = 580°F

△D11

REV	PERF	DATE	CHKD	DATE
D11	JWD	9-12-91	MFL	9/16/91

PROBLEM NO._____

STATION/UNIT OCONEE/1

CALC NO. OSC-1522

yield strength, S_{ys} = 38.0 ksi
section modulus, $Z = 0.0982 (D^4-d^4)/D$ = 1954 in^3
metal area, $A = PI(D^2-d^2)/4$ = 270 in^2

D11

From Fig. A-3300-3 of Ref. 1 and a/t = 0.153 :

$$M_m = 1.11$$

The factor K_I will be used in Subarticle IWB-3600 Analytical Evaluation of Indication.

The dead load, thermal, and earthquake loadings are obtained from page B-8-6 of Section 3.1 of OSC-1522, the LOCA loadings are obtained from B&W telecopies which are included as pages 9 and 10 in this attachment. They are tabulated below.

		Bending (ft-lbs.)	
	Fy(axial), lbs.	Mx	Mz
Dead Load	-237665	-249077	547596
Thermal expansion (15% power)	-110012	-648770	-350774
X - Direction earthquake	±47872	±60964	±402742
Y - Direction earthquake	±49424	±46137	±343855
Z - Direction earthquake	±32336	±32783	±231660
LOCA	±635160	±628790	±2668790

By inspection of earthquake loads, $(x^2+y^2)^{1/2} > (z^2+y^2)^{1/2}$, the applicable seismic inertia loads are:

	Fy(axial), lbs.	Mx(ft-lbs.)	Mz(ft-lbs.)
X-Y (OBE)	68807	76454	529563
X-Y (DBE)	137614	152908	1059126

REV	PERF	DATE	CHKD	DATE
D11	JVD	9-13-11	MFL	9/16/91

PROBLEM NO._____

STATION/UNIT OCONEE/1

CALC NO. OSC-1522

GENERAL CALCULATION WORKSHEET

SUBJECT: FLAW INDICATION EVALUATION

Loading conditions are defined as:

Normal = Dead Load or Dead Load+Thermal

Upset = Normal ± OBE

Faulted = Normal $\pm(DBE^2 \pm LOCA^2)^{1/2}$

Delta K_I = Thermal ± OBE or Upset - Dead Load

And total stresses are computed by the equation:

$s = B1*PD/2t + M_R/Z + Fy/A$, where:

$M_R = (Mx^2 + Mz^2)^{1/2}$, B1 = 0.5

Z = Section Modulus

A = Metal Area

Calculated stresses in psi and flaw shape parameters Q are shown on page 5, where:

Q's are calculated from equation

$Q = \phi^2 - 0.212(s/s_{ys})^2$ (REF. 3, page D4)

$\phi^2 = 1 + 4.593(a/l)^{1.65}$ (REF. 3, page D3)

Delta a = da/dN * (number of cycles)

$da/dN = (0.3795 \times 10^{-3})(\text{delta } K_I)^{3.726}$ (REF.1)

Total number of design cycles = 580 (Section 3.1 of this calc. OSC-1522)

Using RT_{NDT} = 10°F (see page 11) => T-RT_{NDT} = 60°F , fracture toughness K_{IC} and K_{Ia} are read from Fig. A-4200-1 of Ref. 1 .

K_{Ia} = 56 ksi(in)$^{1/2}$ => $K_{Ia}/(10)^{1/2}$ = 17.7 ksi(in)$^{1/2}$

K_{Ic} = 116 ksi(in)$^{1/2}$ => $K_{Ic}/(2)^{1/2}$ = 82 ksi(in)$^{1/2}$

REV	PERF	DATE	CHKD	DATE
D11	NVP	9-13-91	MFL	9/16/91

PROBLEM NO.

STATION/UNIT OCONEE/1

CALC NO. OSC-1522

FLAW EVALUATION

Pressure	Z	Ft-Lbs	Fy	Mx	Mz	ai	0.42
2185	1954	Gravity	-237665	-249077	547596		
		Thermal	-110012	-648770	-350774	Mm	1.11
sys	A	OBEX	47872	60964	402742	af	0.43
38000	270	OBEY	49424	46137	343855	Delta a	0.00549
Cycles		OBEZ	32336	32783	231660	I	1.60
580		LOCA	635160	628790	2668790	a/l	0.26
						a/t	0.15

	Normal	Upset	Faulted.
Klact	11617	13440	31954
Ratio	0.66	0.76	0.39

Kia	Klc
17700	82000

Load Case	Fy Lbs	Mx Ft-Lbs	Mz Ft-Lbs	F/A psi	M/Z psi	s press psi
Gravity	-237665	-249077	547596	-880	3695	6754
Thermal	-110012	-648770	-350774	-407	4530	6754
OBEX	47872	60964	402742	177	2502	6754
OBEY	49424	46137	343855	183	2131	6754
OBEZ	32336	32783	231660	120	1437	6754
LOCA	635160	628790	2668790	2353	16842	6754
OBExy	68807	76454	529563	255	3287	6754
OBEyz	59062	56598	414611	219	2570	6754
OBEmax	68807	76454	529563	255	3287	6754

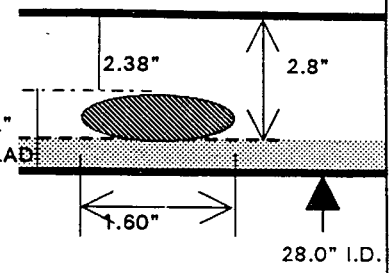

Load Case	Fy Lbs	Mx Ft-Lbs	Mz Ft-Lbs	F/A psi	M/Z psi	s press psi	s total psi	s/sys	Q	KI
N1 = Norm 1	-237665	-249077	547596	-880	3695	6754	9568.48	0.25	1.49	9988.11
N2 = Norm2	-347677	-897847	196822	-1288	5646	6754	11111.73	0.29	1.49	11617.29
				Upset						
U1 = N1 + OBE	-168858	-172623	1077159	-625	6701	6754	12828.95	0.34	1.48	13439.93
U2 = N1-OBE	-306472	-325531	18033	-1135	2003	6754	7621.08	0.20	1.50	7942.23
U3 = N2 + OBE	-278870	-821393	726385	-1033	6735	6754	12455.87	0.33	1.48	13042.99
U4 = N2-OBE	-416484	-974301	-332741	-1543	6324	6754	11534.91	0.30	1.49	12065.43
				Faulted						
N1 + SSE + L	412232	398038	3418866	1527	21142	6754	29422.38	0.77	1.38	31953.83
N1-SSE-L	-887562	-896192	-2323674	-3288	15298	6754	18763.79	0.49	1.45	19842.67
N2 + SSE + L	302220	-250732	3068092	1119	18908	6754	26781.29	0.70	1.40	28858.26
N2-SSE-L	-997574	-1544962	-2674448	-3695	18972	6754	22030.16	0.58	1.43	23455.20

Delta KI	Fy	Mx	Mz	F/A	M/Z	s press	s total	s/sys	Q	KI
U1-N1	68807	76454	529563	255	3287	6754	10295.01	0.27	1.49	10754.13
U2-N1	-68807	-76454	-529563	-255	3287	6754	9785.28	0.26	1.49	10216.52
U3-N1	-41205	-572316	178789	-153	3683	6754	10283.95	0.27	1.49	10742.46
U4-N1	-178819	-725224	-880337	-662	7006	6754	13097.24	0.34	1.48	13725.73
U1-N2	178819	725224	880337	662	7006	6754	14421.92	0.38	1.47	15141.38
U2-N2	41205	572316	-178789	153	3683	6754	10589.19	0.28	1.49	11064.78
U3-N2	68807	76454	529563	255	3287	6754	10295.01	0.27	1.49	10754.13
U4-N2	-68807	-76454	-529563	-255	3287	6754	9785.28	0.26	1.49	10216.52

Delta KI 15141.38
psi(in)**1/2

SIZE (Do)	34.00	Norm 1	Weight		
THICKNESS	2.75	Norm 2	Weight	Thermal	
ID	28.50	N1 + OBE	Norm 1	+ OBE	
		N1-OBE	Norm 1	-OBE	
A steel	270	N2 + OBE	Norm 2	+ OBE	
		N2-OBE	Norm 2	-OBE	
		N1 + SSE +	Norm 1	+ 2 OBE	+ LOCA
		N1-SSE-L	Norm 1	-2 OBE	-LOCA
I	33212	N2 + SSE +	Norm 2	+ 2 OBE	+ LOCA
Z	1954	N2-SSE-L	Norm 2	-2 OBE	-LOCA

PROBLEM NO.
STATION/UNIT OCONEE/1
CALC. NO. OSC-1522
PAGE 5

REV.	BY	DATE	CHKD	DATE
D11	HVD	9-12-91	MFL	9/16/91

GENERAL CALCULATION WORKSHEET

SUBJECT: FLAW INDICATION EVALUATION

RESULTS:

Normal condition:

KI = 11.617 < 17.7 ksi(in)$^{1/2}$ => **Ratio = 0.66** (I)

Upset condition:

KI = 13.440 < 17.7 ksi(in)$^{1/2}$ => **Ratio = 0.76** (II)

Faulted condition:

KI = 31.954 < 82.0 ksi(in)$^{1/2}$ => **Ratio = 0.39** (III)

Final depth of the flaw at the end of design life cycles:

a_f = 0.43 in.

Note that initial a_i = 0.42 in.

D11

By inspection of equations (I), (II), (III), and the new calculated depth of the flaw, no further calculation is required. The acceptance criteria IWB-3610 is met and therefore, the indication will not have any consequences to the integrity of the piping component.

CONCLUSION:

The component containing the flaw indication is acceptable for continued service. The flaw indication will not impact the integrity of component for the design lifetime of service. Therefore, no repair is required.

REV	PERF	DATE	CHKD	DATE
D11	HVD	9-13-91	MFL	9/16/91

PROBLEM NO._____

STATION/UNIT OCONEE/1

CALC NO. OSC-1522

GENERAL CALCULATION WORKSHEET

SUBJECT: FLAW INDICATION EVALUATION

References:

1.) ASME Boiler and Pressure Vessel Code, 1980 Edition, Section XI. Division I Rules for Inservice Inspection of Nuclear Power Plant Components.

2.) ITT Grinnell, Piping Design and Engineering, 5th edition.

3.) EPRI NP-719-SR Special Report August 1978 -

Flaw Evaluation Procedures: ASME Section XI

4.) Drawings: OM-100-1402, Rev.0

OM-201-0535, Rev.4

OM-201-1845, Rev.0

REV	PERF	DATE	CHKD	DATE
D11	HVD	9-13-91	MFL	9/16/91

PROBLEM NO. _____

STATION/UNIT OCONEE/1

CALC NO. OSC-1522

DESIGN ENGINEERING DEPARTMENT
OPERABILITY EVALUATION

Station: Oconee Unit: 1 PIR Number: 1-091-0089

Structure, system, or component (SSC) in question: #1A Steam Generator

Design basis references applicable: B&W Drawing 10190D (OM 201-34)

Technical Specification sections applicable: N.A.

The SSC in question is recommended to be:

☒ OPERABLE ☐ CONDITIONALLY OPERABLE Operability Evaluation expiration date: _____ ☐ INOPERABLE

FSAR change required ☐ Yes ☒ No 10 CFR 50.59 Evaluation required ☐ Yes ☒ No

Summary/Comments:

During ISI a ½" long linear indication was found in the #1A Steam Generator Nozzle Main Steam Nozzle. Exploration proved this to be a minor surface indication .050" deep. The remaining wall thickness is in excess of the 4.500" minimum specified on the B&W Drawing 10190D.

Based on the above, we conclude that the Unit has operated safely and is safe for continued operation.

Originated by: R. L. Williams Date: 9/10/91

Reviewed by: M A Lyon Date: 9/10/91

Approved by: C W Boyd Date: 9/10/91

Attachment to Form QAL-14A

SERIAL NO. SN/31

SUPPORT NO. 1-54A-0-435B-DE10

Q A ITEM NO. F1.02.478

Design Engineering Comments/Disposition:

Design Engineering review has found this support to be unacceptable for service. PIR 1-091-0083 has been written to address this discrepancy. The piping system was reanalyzed with this support inactive. Both the piping system and adjacent supports 1-54A-3-0-435B-R3 & 1-54A-3-0-435B-H23 were found to be acceptable for service for this condition. However. repair of this support is required in order for these supports to meet the the requirments of Design Specification OSS-0027.00-00-0001. Exempt Change VN OE-4211 has been written to repair the damaged concrete and to reinstall the support.

Originated By: _____ Date: 9·5·91

Approved By: _____ Date: 9/6/91

PIR - 1-091-0083

Form 35524 (R1-91)

EXEMPT CHANGE

No SPR

System or Structure BS

Q A Condition 1

Unit 1

Resolution needed by (date):

[Y] Outage Related

EXEMPT CHANGE

OE-4211

WR # 99996C

Field Contact Mo, Salim

DE Contact Rusty Child

Exempt Change Type 9.2.1.1.(d)

Description of Change

Remove Support/restraint # 1-54A-0-435B-DE10 temporarily to correct deficiency found during ISI Inspection.

Action to be taken: Remove S/R temporarily, Remove plate behind item #6, repair damage concrete and Re-install the Support

(Ref. PIR # 1-091-0083)

RAC

Distribution (number of copies)

Design Engineering (original)	
Accountable Engineer	
DE Contact	
Document Control	
Diane Powell	
RC Futrell	
Ranny Wilkie	

RESOLVED STAGE

[X] No exceptions

[X] Technical exception

[ ] Corrections to document list *

[ ] Other editorial exception

(Describe below & Call Field Contact)

Revise HN-3462 to ~~[illegible]~~ WC34100 w/ 8" min embedment from face of concrete. ~~[illegible]~~

Field Contact

Called Mo Salim Date: 9/3/91

The design affected by this Exempt Change has been performed and verified to permit safe station operation

Performed [signature] Date: 9/3/91

Checked [signature] Date: 9/3/91

Approved [signature] Date: 9/3/91

ATTACHED:

[X] 50.59 Evaluation

[ ] 72.48 Evaluation (ISFSI)

[X] Sketch [ ] Other

Joe M Davis 8/29/91

Station Approval Date

VTO	Document List	Rev
[ ]	1 1-54A-0-435B-DE10	2
[ ]	2	
[ ]	3	
[ ]	4	
[ ]	5	
[ ]	6	
[ ]	7	
[ ]	8	

Attach extra page if necessary

* Revise Document List above to show additions and deletions

CLEARED STAGE

[ ] Corrections to document list

Form 4337 (R2-87)

Duke Power Company
10CFR50.59 EVALUATION
Page 1

(1) STATION: Oconee UNIT(s): 1

(2) EVALUATION FOR: Exempt change OE-4211, Remove hanger 1-54A-0-435B-DE10 temporarily, repair damaged concrete and re-installed the hanger

(3) SCREENING FOR 10CFR50.59 APPLICABILITY:

Does this evaluation item:

affect structures, systems, or components that are addressed in the FSAR in a significant manner? ☐ Yes ☒ No

appear significant enough as to require inclusion in the FSAR? ☐ Yes ☒ No

involve procedures as described in the FSAR? ☐ Yes ☐ No NA ms.

involve tests or experiments not addressed in the FSAR? ☐ Yes ☐ No NA ms.

FSAR Sections Consulted: 3.9.3.4.2, 7.3.2.4, 15.14.5

(4) TECHNICAL SPECIFICATION REVIEW:

Will this item require a change to the station Technical Specifications? Affected Tech. Specs. Section(s) consulted and Licensing personnel contacted: These Support/restraints are not addressed in the Tech. Spec. ☐ Yes ☒ No

Check appropriate block	Part 3 answer is	and Part 4 answer is	Go to Part	Page
☒	No	No	5	1
☐	Yes	No	6	2
☐	Yes	Yes	7	2
☐	No	Yes	7	2

(5) PARTS 1-4

Prepared by/Date Nkhammad Sabri 8/29/91

Reviewed by/Date [signature] 8/29/91

SAFETY EVALUATION 10CFR50.59 FOR EXEMPT CHANGE OE-4211

This exempt change is to remove S/R 1-54A-0-435B-DE10 temporarily to repair the deficiency found during the ISI inspection. After the repair is completed S/R will be re-installed.

Part-3

Safety Review and Evaluation

This exempt change will remove the existing S/R 1-54A-0-435B-DE10 temporarily, and repair the deficiency (damaged concrete under the baseplate) found during the ISI inspection. After the repair is made S/R 1-54A-0-435B-DE10 will be re-installed. This S/R is QA-1 condition and correcting deficiency will only help to maintain the reliability of the S/R. There will be no structural changes made to the S/R, only grout pad is being removed. Design Engineering has approved the elimination of the grout pad. Correcting the deficiency found to S/R 1-54A-0-435B-DE10 during ISI inspection will not affect structures, systems or components that are addressed in the FSAR in significant manners. This exempt change is not significant enough to require inclusion in the FSAR.

Part-4

Correcting the deficiency on S/R 1-54A-0-435B-DE10 will have no direct or indirect impact on safety functions during the design basis event. No change is required to any station Technical Specifications due to implementing this exempt change. No margin of safety will be reduced by correcting the deficiency on S/R 1-54A-0-435B-DE10, therefore, there is no unreviewed safety question involved.

Mohammad Sahni 8/29/91

Lee Ramsey 8/29/91

ITEM NO.	QTY NO.	SIZE	DESCRIPTION	ASTM	LOT NUMBER	BY
1	1	W4 x 13 x 2'-5 3/4" Lg.		A-36		EXIST
(2)	2	SIZE 'A', FIG 211, SNUB STRUT ASSEMBLY, OPTION I W= 2'-13 1/4" Lg.			298-497 E	HC
3	1	L 3 x 3 x 5/16 x (CUT TO FIT)		A-36		EXIST
4	1	3/8" x 8" FIG. 137 U-BOLT				
5	1	8" FIG. 162 PROT. SADDLE				
6	1	PL 3/4 x 9 x 0'-9" Lg.				
(9)	2	REAR BRACKET FOR FIG 211, SIZE A, W/ PIN			298-567 E	HC
~~(10)~~	~~4~~	~~3/4" Hilti Anchors (HW-100)~~			~~NOT USED~~	~~FBS~~
10	4	3/4" ϕ Wedge Anchors (WG34100)				

UNIT E-4211

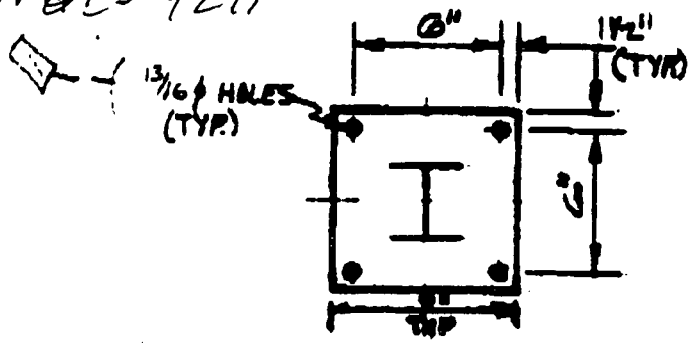

SECT. A-A

Approved by Randall Hall 8/27/91

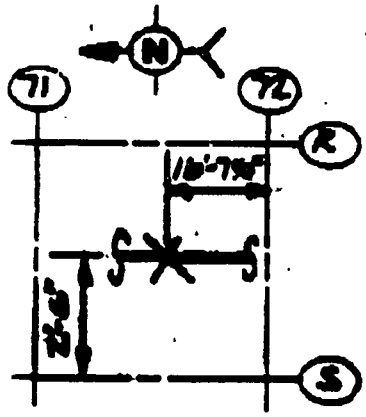

LOCATION PLAN

DIRECTION	HOT NVE	DSE NVE	HOT LB.	COLD LB.	UPSET	FAULTED	HYDRO
VERTICAL			10275#	60"	12350 W/ 2 SSE	5764 W/ 4 SSE	
N-S	6.1"						
E-W	6.1"						

ANALYSIS PROBLEM NO. 1-54A-0-432-415 DATA PT. 4 STRESS CALC. OSC-6015-03-0004

DESIGNED / DATE [illegible] INSPECTED / DATE WAIVED

DRAWN / DATE [illegible] INSPECTED / DATE WAIVED

CHECKED / DATE [illegible] APPROVED / DATE [illegible]

QA CONDITION 1

DUKE POWER COMPANY

PROJECT OCONEE NUCLEAR STATION UNIT 1

REV.	BY	CK	DATE	DESCRIPTION	APP.	DATE
0	MPH	ATP	3-8-91	REVISED PER SER 79-14		
1						
2						

REFERENCE DRAWINGS

PIPE O-4358 REV.

CIVIL REV.

ELEC. REV.

H.V.A.C. REV.

SHEET NO. 1 OF 2 REV. 2

MARK NO. 1-54A-0-4358-0810

VN - OE-4211

Approved by [signature] 9/27/91

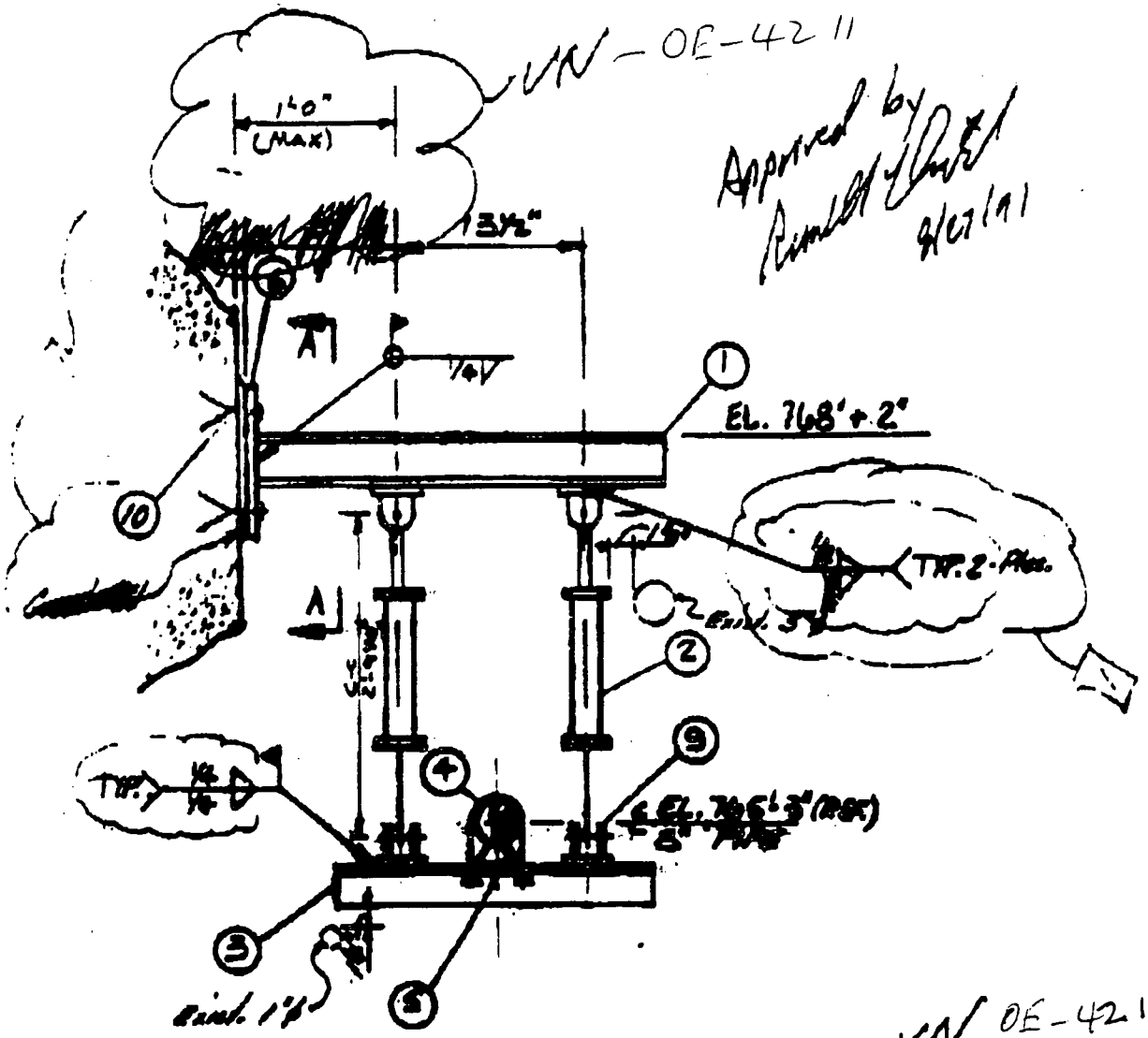

VN OE-4211

ELEV. LKG. NORTH

Note: Field to
1) Repair damaged concrete per Station Procedures
2) The grout pad is to be omitted and the existing PL 1½"X4"X6" located behind item 6 is to be removed.
3) Min. Embedment for WS34100 to be 8" from face of concrete

DUKE POWER COMPANY

PROJECT OCONEE NUCLEAR STA. UNIT 1

Q.A CONDITION 1

SHEET NO. 2 OF 2 REV. 2

MARK NO. 1-54A-0-4358-DE10

Form 04363 (5-87)

Sheet 1 of 1

BOM INPUT SHEET

Location: ONS Originated By: Mohammad Sahu Date: 9-4-91

NSM# OE 4211 Line Item 01 Activity# 01

Need Qty. 04 Issue Unit EA QA Cond 1 Need Date 090591

Description ANCHORS WEDE(WS34100)

Work Req# 99996C Dwg# 1-5AA-0-435A-DR10

Req./Tag#

Comments Price Ind.

I.D. 02611115C

Proj./NSM# [redacted] Line Item 02 Activity# [redacted]

Need Qty. 02 Issue Unit EA QA Cond 1 Need Date [redacted]

Description RBAR BRACKET P16-

Work Req# [redacted] Dwg#

Req./Tag#

Comments Price Ind.

I.D.

Proj./NSM# [redacted] Line Item Activity# [redacted]

Need Qty. Issue Unit QA Cond Need Date [redacted]

Description

Work Req# [redacted] Dwg#

Req./Tag#

Comments Price Ind.

I.D.

Proj./NSM# [redacted] Line Item Activity# [redacted]

Need Qty. Issue Unit QA Cond Need Date [redacted]

Description

Work Req# [redacted] Dwg#

Req./Tag#

Comments Price Ind.

I.D.

FORM # ONS-535

DUKE POWER COMPANY
OCONEE NUCLEAR STATION
TRANSFER OF COMPLETED OR PARTIALLY COMPLETED MODIFICATIONS

SECTION A - TECHNICAL SUPPORT LEADER

MODIFICATION NO. OE-4211 REV. 0 PART — UNIT 1
DESCRIPTION OF SYSTEM BEING TRANSFERRED Repair damaged Concrete and re-install Hanger 1-54A-0-435B-DE10.

SECTION B - JOB SUPERVISOR

ALL PHYSICAL WORK FOR THIS MODIFICATION IS COMPLETE INCLUDING:
1. K.E.B. WORK AREA IS CLEAN.
2. K.E.B. WORK REQUEST HAS BEEN SIGNED-OFF.
3. K.E.B. ALL DOCUMENTATION IS COMPLETE & SIGNED-OFF.

REMARKS\EXCEPTIONS (CONDITIONAL TURNOVER) _____

JOB SUPERVISOR [signature] DATE 9-13-91

SECTION C - TECHNICAL SUPPORT LEADER

THE INSTALLATION OF THE ABOVE DESCRIBED MODIFICATION IS COMPLETE.
1. MS ALL DOCUMENTATION IS COMPLETE & SIGNED-OFF.
2. MS LIST OF COMPONENT STATUS SUPPLIED TO ACCEPTING GROUP.
3. MS DRAWING LIST VERIFIED CORRECT AND SENT TO A\E.
4. MS ALL VNs ARE RESOLVED.

REMARKS\EXCEPTIONS (CONDITIONAL TURNOVER) _____

TECH. SUPPORT LEADER Mohammed Sahu DATE 9-16-91

SECTION D - ACCOUNTABLE ENGINEER

1. MS PROCEDURES AND WORK REQUEST APPROVED.
2. MS DRAWING LIST VERIFIED CORRECT AND SENT TO DOC. CONTROL.

REMARKS\EXCEPTIONS (CONDITIONAL TURNOVER) _____

ACCOUNTABLE ENGINEER Mohammed Sahu DATE 9-16-91

SECTION E - DOCUMENT CONTROL

No Interims

INTERIM DRAWINGS\SUPERCEDED LIST RECEIVED BY ALL GROUPS.
OPS\CHEM RELATED INTERIM DRAWINGS RELEASED - YES - NO - (CIRCLE ONE)
DOCUMENT CONTROL [signature] DATE 9/16/91

NSM CRITICAL TO PLANT OPERATIONS - DELAY IN RELEASE OF INTERIMS TO NON-ACCEPTING GROUPS AUTHORIZED.
SUPERINTENDENT _____ DATE _____

SECTION F - QUALITY ASSURANCE

THE ABOVE MODIFICATION MEETS ALL QUALITY ASSURANCE REQUIREMENTS AND DOCUMENTATION NECESSARY FOR OPERATION OR USE OF THE SYSTEM.
REMARKS\EXCEPTIONS (CONDITIONAL TURNOVER) _____

QA REPRESENTATIVE [signature] DATE 9/16/91

WORK ORDER INFORMATION: **Resp Facilty:** ON **Prty:** 5D
Lead Planner: ASHLEY, DONNIE
Title: PERF. AFTER REM. PLATE & REP. DAMAGE._____
Outage No: _____ **Project No:** OEC-4211 **Part#:**__

TASK INFORMATION: **Task Planner:** ASHLEY, DONNIE
Work Req#: 91015417 **Old WR:**99996C__
Fac: ON **Un:** 1 **Eqp:** **Comp:**
Work Item: OEC WR0001_____ **UTC:**
Bld: **Rm:** **El:** **Cl:** **Deg/Rad:**
Loc:

EXEMPT CHANGE
~~WORK ORDER~~ TASK
91072709 01

Cover Sheet
FINAL
Printed: 09/05/91 13:43

Seq No.	Task No.	Crt Task	Work Against	Task Planner	Assigned Supervisor
01	01		ON1 OECWR0001_____	ASHLEY, DONNIE	

Task Title: PERF. AFTER REM. PLATE & REP. DAMAGE._____

STAMPS

EQDB

Original

WMS

NPRDS

STAMPS

Seq No.	Task No.	Crt Task	Work Against	Task Planner	Assigned Supervisor
01	01		ON1 OECWR0001_____	ASHLEY, DONNIE	

Task Title: PERF. AFTER REM. PLATE & REP. DAMAGE._____

Total Number Of Tasks: 01

Fac: ON Un: 1 Equip: Comp:	91072709 01
Wrk Item: OEC WR0001_____ UTC: Train:	

SECTION I - ORIGINATION ___ Additional Sheets

Orig Work Req: 91015417 **Orig Date:** 09/04/91 **Originator:** SALIM, MOHAMMAD
Orig Section : PROJ **Need Date:** 10/10/91 **Approved:** RIDDLE, NED
ID Tag Placed: N____ **Prty:** 5D
Location Narr: AUX. BLDG._____
Critical Task: **Equipment List:**
WID: 73100EC19E0C13 **Resp:** 7308 **CCOA:**

Problem Statement: PERFORM OE 4211 AFTER REMOVING PLATE AND REPAIR DAMAGE CONC RETE PER W.R. 99997C. REINSTALL HANGER 1-54A-0-435B-DE10____

Failure Desc: _____

==========

SECTION II - DETERMINATIONS & PROCEDURES ___ Additional Sheets

Tech Spec Item: N **Tech Spec Expiration Date:** _____ **Time:** ____ **Tech Spec Related:** N

QA Cond	: 1	SALIM, MOHAMMAD	**Confined Space:**	N
Funct	: M	SALIM, MOHAMMAD	**Enclosed**	: X
Retest	: N	SALIM, MOHAMMAD	**NPRDS Related**	: N
ALARA	: N	SALIM, MOHAMMAD	**Rework**	: N
RWP/SRWP	: Y	SALIM, MOHAMMAD	**RWP/SRWP#** _____ **IRW:** N	
Red Tag	: N	SALIM, MOHAMMAD	**From :** _____ **To:** _____ **Cleared:**____	
QA Reqd	: Y	MC CLURE, WILLIAM	**Before** Y **After** Y	
ANI	: N	MC CLURE, WILLIAM	**Duke Class:** X__	
Clean Zone: 3		SALIM, MOHAMMAD	**ISI Class :** N/A	

EQ Item : N **Active** : N **Size** : N/A_

Scaffolding Req: N **Insulation Removal Req:** N **Control Room Inst:** N **ES Related:** N
Block Tag Out: N **PMT Block:** N **OOC:** X__

Safety Stmt./ _____
Special Inst: _____

Procedures/Standards

MP MP/0-0/A/1800/035
MP MP/0-0/A/3019/004

Planner Review And Approval Original Date: 09-05-91

Workers :

- Component Change-out Required

Complete this Section if new Equipment/Component was installed:

Manufacturer :

Model Number : UTC Number:

Serial Number:

Description : Document:

SECTION VI - MISCELLANEOUS

___ Additional Sheets

SECTION VII - QA

___ Additional Sheets

Original

	Inspector Notified	Notified By	Date	Time	Inspected By
Prior To Job Start:	Jim Turner	Steve Roberts	9-9-91	0905	
After Job:			9-12-91	10:35	

Comments: Anchor Torques Verified w/ torque wrench # OCMNT-26973 Cal Due 12-10-91

Fac: ON Un: 1 Equip: Comp:
Wrk Item: OEC WR0001_____ UTC: Train:

91072709 01

Printed: 09/05/91 13:43

POST-MAINTENANCE TESTING PLAN

1_ ✓ Work Scope Known (if unknown, go to Section 2)
After completion of Maintenance, evaluate work performed.
Was work actually performed the same as originally planned?

No __ Yes ✓ (if Yes, go to Section 3) Craft Supv: [signature] 9-12-91
Date

If No, evaluate Post-Maintenance Testing Plan after completion of Maint.
Is additional or different testing required?

No __ Yes __ (if Yes, Revise Section 3) Determined: _____ _____
Date

2_ ___ Work Scope Unknown
After completion of Maintenance, evaluate Post-maintenance Testing Plan
Is Post-mainteance Testing required?

No __ Yes __ (if Yes, Specify In Sect.3) Determined: _____ _____
Date

3.	Type Of Test	Responsible Section	Procedure or Other Documentation	Date performed	Completion Verified By
Functional Verifications/Installation Tests ____ Check here if specified on attached Sheets or Matrices.					
Per Procedure	MAINT.	MP/0/A/1800/035 MP/0/A/3019/004	9-11-91	Joe O'Shields	

Remarks: _____

PMT Operability Review: _____ _____

Retests

Original

Remarks: _____

PMT Operability Review: _____ _____

MS12 ** MMIS ** LOCATION INVENTORY STATUS ** MMIS **

ID# 02611115C STORES LOC 7310 MISC INFO C310*

DESCRIPTION ANCHOR, ,WEDGE,3/4",10",CARBON STL,10,WS-34100 UNIT OF ISSUE EA

QUANTITY ON HAND		146	PO#		SP CODE		N
VALUE ON HAND		310.75	PO#		#PER HST		260
SYSTEM AVERAGE PRICE		2.12842	PO#		TYP STOCK CD		8
PLUS QUANTITY		0					
ON ORDER		PO HISTORY:	REQ#				
ON REQN			REQ#				
ALLOC QTY	0	TRANS IN	0	USAGE WTD	0		
MIN QTY	0	TRANS OUT	0	USAGE MTD	0		
MAX QTY	0	TRANS MTD	0	USAGE QTD	0		
EMER QTY	0	TRANS YTD	0	USAGE YTD	0		
LEAD TIME	0.00	TRANS LYR	0	USAGE LYR	0		
TRANS DATE	11/22/82	RECPT MTD	0	USED QTY	0		
RECEIPT DATE		RECPT YTD	0	SALES QTY	0		
ADJMT DATE	04/18/90	ADJMT MTD	0	SALES TD	0		
		ADJMT YTD	0	TR REF#			
ISSUE DATE	08/04/88	LAST ACTIVITY:		LAST USAGE ACTIVITY:			
SETUP DATE	08/31/90	TR CODE	66	TR CODE	62		
CHANGE DATE	01/07/91	TR QTY	0	TR QTY	50		
BIN #1	2- N- 3- 2	TR DATE	04/18/90	TR DATE	08/04/88		

NEXT ID# 02611115C NEXT SLOC 7310 SYS STAT(MS10)? N ME CAT(S21A)? N

ISSUED BY: BRW7315 REQ NO. 15569 WORK ORD: 91072709

CREW #: TASK #: 01

ADDITIONAL SHEET - SECTION IV SHEET ___ OF ___ DATE: 09/09/91

MATERIAL DESCRIPITON	MMIS #	STATUS	QTY	QA TAG HT# or SN
ANCHOR, ,WEDGE,3/4",10" ,CARBON STL,10,WS-34100	02611115C	ISSUED	4	ON022476

Form 34731 (R5-88)

WORKING COPY

Duke Power Company
PROCEDURE PROCESS RECORD

(1) ID No. MP/0/A/1800/035
Change(s) 29 to 29 Incorporated

TASK # MM-OT-0911

PREPARATION

(2) Station OCONEE

(3) Procedure Title CONCRETE ANCHOR - INSTALLATION

(4) Prepared By Tommy King Date 5-~~30~~ 13-91

(5) Reviewed By Fredric W. Finley III TKR Date 5-13-91

Cross-Disciplinary Review By _____ N/R ~~[illegible]~~ NA

(6) Temporary Approval *(if necessary)*

By _____ (SRO) Date _____

By _____ Date _____

(7) Approved By W W Foster Date 5/14/91

(8) Miscellaneous

Reviewed/~~Approved~~ QA By W McClure Date 5/14/91

Reviewed/Approved By _____ Date _____

(9) Comments (For procedure reissue indicate whether additional changes, other than previously approved changes, are included. Attach additional pages, if necessary.)
Additional Changes Included. ☐ Yes
☒ No

(10) Compared with Control Copy N/A - REFER TO STEP 6.1 Date N/A

(11) Requires change to FSAR not identified in 10CFR50.59 evaluation? ☐ Yes
If "yes", attach detailed explanation. ☒ No

Completion

(12) Date(s) Performed 9-9-91

(13) Procedure Completion Verification

☑ Yes ☐ N/A Check lists and/or blanks properly initialed, signed, dated or filled in N/A or N/R, as appropriate?

☑ Yes ☐ N/A Listed enclosures attached?

☑ Yes ☐ N/A Data sheets attached, completed, dated and signed?

☐ Yes ☑ N/A Charts, graphs, etc. attached and properly dated, identified and marked?

☑ Yes ☐ N/A Procedure requirements met?

Verified By Robert E. Baker Date 9-12-91

(14) Procedure Completion Approved Leonard Brock Date 9-14-91

(15) Remarks *(attach additional pages, if necessary)*

LAST APM REVIEW: 08/27/90

DUKE POWER COMPANY

OCONEE NUCLEAR STATION

CONCRETE ANCHOR - INSTALLATION

1.0 Purpose

1.1 This procedure provides guidelines for the following:

- Installation of ITT Phillips "Red Head" concrete anchors
- Plugging non-safety related holes.

1.2 IF any Design Engineering drawings differ from this procedure THEN Design drawings take precedence over this procedure.

2.0 References

2.1 Source Documents

2.1.1 Red Head Catalog F-1000

2.1.2 OS-0027.00-00-0001 (Design Specification)

2.1.3 OS-0027.00-00-0002 (Design Specification)

2.1.4 OS-0020.00-00-0003 (Design Specification)

2.1.5 Station Directive 4.2, Sections 4.2.1 and 4.2.2

2.2 References Needed to Perform Procedure

2.2.1 MP/0/A/1800/043, "Grouting - Repair of an Abandoned Drilled Hole three inches or Less in Diameter"

2.2.2 MP/0/B/1800/095, "SSF CO Fire Protection System - Isolation"

3.0 Personnel Requirements

Refer to Section III of Station Work Request.

4.0 Safety Considerations

4.1 Equipment Clearance and Isolation

4.1.1 Permission to release equipment for maintenance shall be granted by Unit Shift Supervisor.

4.1.2 Personnel performing this procedure should, to the best of their ability, verify safe condition of equipment on which maintenance is to be performed AND verify safe positions of valves, breakers, etc.

4.2 Radiation Protection Considerations

IF (S)RWP is required, Responsible Supervisor SHALL ensure Technicians understand AND implement Radiation Protection considerations and ALARA methods.

4.3 Special Safety Considerations

None

5.0 Unit Status

SDR 5.1 Verify clearance to begin work in Section II of Station Work Request has been obtained.

6.0 Prerequisites

SDR 6.1 Compare "Working Copy" to "Control Copy"; this SHALL be performed every 14 calendar days UNTIL procedure is completed.

Initial Comparison Date 9-9-91 By Steve Roberts

Date ____/____ Date ____/____ Date ____/____ Date ____/____

RES Supv. 6.2 Responsible Supervisor SHALL review this procedure AND mark all steps known to be NOT applicable, "N/A."

SDR 6.3 IF necessary, contact RP for coverage.

SDR 6.4 IF required, contact QA prior to starting job.

RES Supv. 6.5 Responsible Supervisor or designee SHALL verify Safety Considerations, Section 4.0, have been complied with.

N/A A.E.O. 6.6 IF work is to be performed inside the Diesel Generator Room or adjoining areas of the SSF and any conditions exist which prevent immediate personnel egress or requires egress times of greater than 60 seconds, initiate MP/0/B/1800/095.

7.0 Repair Parts

7.1 Document all parts used in Sections IV and V of Station Work Request.

7.2 Substitutions for parts listed may be made with Accountable Engineer's approval. Document substitutions and approvals on Enclosure 13.7, "Log Sheet."

8.0 Special Tools

8.1 747 Roto Stop Hammer Kit

8.2 Torque Wrench

8.3 Precision Tools

Type	Used For	Serial #	Cal. Due Date
250 Ft/lbs	Torque Base Plate	26971	11-16-91

9.0 Acceptance Requirements

JPO 9.1 Anchor(s) will be installed per guidelines of this procedure.

JPO 9.2 All abandoned or unused holes will be plugged per guidelines stated in this procedure.

JPO 9.3 Any approved hanger drawing different from guidelines of this procedure, will take precedence.

10.0 Interference Items

None

11.0 Procedure

NOTES:

1. Performance of all steps in Section 11.0 shall be signed-off on Enclosure 13.1.

2. Expansion anchors of greater than 1/2 inch diameter, with drilled hole depth greater than 3 inches, shall NOT be installed in Reactor Building shell wall, UNTIL reviewed by Design Engineering Civil Department for interference with embedded post-tensioning tendons AND approved for installation.

3. Expansion anchors shall NOT be specified for interior of Reactor Building shell wall.

4. Modification of anchors in ANY of the following ways shall NOT be performed UNLESS authorized by Design Engineering:

   - Cutting anchor to a shorter length
   - Welding anchor in any manner
   - Increasing threaded portion of anchor
   - Any other modification.

5. Length of filler sleeves, where required with use of sleeve anchors, SHALL be determined by responsible Maintenance or Projects Engineer AND recorded on Enclosure 13.7.

6. All drilled holes SHALL be cleaned of concrete dust and foreign particles, using air bulb or similar device, prior to installation of expansion anchor. Holes shall NOT be cleaned with water.

7. Holes for anchors shall NOT be drilled in bottom or lower 1/3 of side of concrete beams without Maintenance or Projects Engineering approval. Approval SHALL be recorded on Enclosure 13.7.

8. NO drilled anchors shall be installed in thin concrete floors (4 inches or less thick).

9. Expansion anchors SHALL NOT be installed in masonry walls UNLESS indicated on Design Drawings.

10. If approved hanger drawing differs from guidelines of this procedure, drawing SHALL take precedence.

11.1 Anchor Identification

NOTES:

1. Sleeve anchors HN1624, 5/16 inch, do NOT have to be stamped, but any other 5/16 inch sleeve anchor SHALL be stamped.

2. IF a 5/16 inch anchor is found existing, anchor is assumed to be HN1624 UNLESS otherwise noted.

3. Sleeve anchors AN1422 and RS1411 do NOT have to be stamped but any other 1/4 inch sleeve anchor or wedge anchor SHALL be stamped with length code.

4. IF a 1/4 inch sleeve anchor is found existing, sleeve anchor is assumed to be either AN1422 or RS1411 UNLESS otherwise noted.

11.1.1 Record size, type of anchor, and quantity of anchors being installed on Enclosure 13.1.

11.1.2 Verify anchor is marked per length code shown on Enclosure 13.3 or 13.4.

11.1.3 IF anchor is NOT marked, return anchor to supply and obtain new marked anchor.

11.3 Drilling Anchor Hole in Concrete

CAUTION

IF rebar is encountered while drilling anchor holes, do NOT install unaffected anchors and do NOT drill remaining undrilled anchor holes UNTIL a total support restraint design solution to rebar interference problem is provided.

NOTES:

1. Holes in concrete shall be drilled deep enough to ensure minimum embedment in concrete is achieved, as specified on Enclosure 13.3 or 13.4, column "B". Grout pad thickness shall NOT be included when determining embedment depth.

2. NO rebar shall be cut without prior approval of Accountable Engineering OR Projects Engineering.

3. Hole SHALL be drilled to nominal diameter of anchor.

4. Before drilling holes for anchor bolts 3/4 inch diameter and larger, pilot holes should be drilled to minimize rebar interferences.

5. Anchor holes SHALL be drilled within 2-1/2 degrees of perpendicular to surface of concrete at location specified on applicable drawing.

11.3.1 Determine minimum required embedment from Enclosure 13.3 or 13.4, column "B", THEN record minimum required embedment on Enclosure 13.1.

11.3.2 Drill hole to required depth.

A. IF rebar is hit while drilling anchor hole, the following information should be given to Maintenance Engineering or Projects Engineering.

1. Hanger, equipment, OR item identification

2. Drawing number specifying anchor

3. Exact location of anchor hole

4. A description of problem.

B. IF rebar is hit while drilling hole OR drilled hole is abandoned for another reason, hole SHALL be plugged regardless of hole diameter.

1. IF another hole is to be drilled within allowable spacing distance as specified in 11.3, hole SHALL be plugged per MP/0/A/1800/043.

2. IF NO holes are to be drilled within this minimum distance, THEN hole can be plugged per Step 11.8.

11.3.3 Record depth of hole on Enclosure 13.1.

11.4 Installation of Concrete Anchors

11.4.1 Install anchors into clean dry holes, ensuring washers and nuts seat flat against attachment.

11.5 Torquing Anchors in Concrete

NOTE: IF torquing requires use of crow's foot, refer to Enclosure 13.6 for formula to calculate torque value.

11.5.1 Determine proper installation torque for anchor from Enclosure 13.3 or 13.4 and record on Enclosure 13.1.

NOTE: Torque values are for clean, dry (unlubricated) threads.

11.5.2 Torque anchors to proper installation torque to ensure expansion and to prevent damage to anchor.

11.5.3 Record installation torque applied on Enclosure 13.1.

11.5.4 Verify anchor nut is fully engaged and washer is flat against attachment after torquing.

NOTE: Anchors having gaps exceeding allowable dimensions after torquing shall be relocated per approved drawings and "Spacing, Edge and End Distance Recommendations," Enclosure 13.2.

11.5.5 Refer to the following chart for allowable gaps for each particular size anchor.

ANCHOR SIZE	ALLOWABLE GAP
1/4 inch	1/64 inch
5/16 inch	1/64 inch
3/8 inch	3/64 inch
1/2 inch	1/16 inch
5/8 inch	7/64 inch
3/4 inch	9/64 inch
7/8 inch	5/32 inch
1 inch	3/16 inch
1-1/4 inch	15/64 inch

11.6 Embedment

NOTE: Grout pad thickness shall NOT be included when determining embedment depth.

11.6.1 Refer to Enclosure 13.3 and 13.4, column "D", then record the "maximum projection above concrete" on Enclosure 13.1.

11.6.2 Measure the ACTUAL anchor projection above concrete, then record the measurement of the anchor with the largest actual projection on Enclosure 13.1.

11.6.3 Verify measurement in Step 11.6.2 is less than Step 11.6.1.

11.7 Anchor Substitution

NOTE: IF anchor problems OR size shortages exist, anchor substitution may be made per the guidelines of Design Specification OS-0027.00-00-0002.

11.7.1 Have anchor substitution approved by Accountable OR Projects Engineering prior to installation. Engineer to sign Enclosure 13.1.

11.7.2 Install substitute anchor in a clean hole as specified by Design Engineering drawings.

11.8 Non-Safety Related Hole Plugging

NOTE: Record on Enclosure 13.1

11.8.1 Clean hole.

11.8.2 Using grout, Sikadur hi-mod epoxy adhesive and Portland cement, or RTV foam, pack hole leaving packing approximately 1/2 inch below flush surface.

12.0 Restoration

JHO 12.1 Verify all abandoned holes have been properly plugged.

JHO 12.2 Verify anchor(s) have been installed.

Verified By Joe Shields Date 05-10-91

Independent Verification Johnny Boggs Date 05-10-91

NOTE: Sign-off for Step 12.3 is on Enclosure 13.1.

12.3 Have QA verify anchor(s) have been installed correctly and have met inspection torque requirements.

ENCLOSURE 13.1

PROCEDURE CHECKLIST

NOTE: Additional copies may be made as necessary.

WORK PERFORMED BY Joe Shields Johnny Boggs SDR Instr

UNIT 1

ANCHORED COMPONENT/EQUIPMENT IDENTIFICATION 1-54A-04358-DE10

DATE 9-9-91

W.R. # 91015417

Anchor Identification

SDR 11.1.1 Size of anchor 3/4" Type of anchor WS Number of anchors 4

SDR 11.1.2 Anchor length code WS341000-(1R)

Anchor Spacing Distances

SDR 11.2.1 Minimum spacing distance between anchors 5 1/4"

JAO 11.2.2

JAO 11.2.3

SDR 11.2.4 Minimum spacing distance to edge 9"

Drilling Anchor Hole in Concrete

SDR 11.3.1 Minimum required embedment 3 1/4"

JAO 11.3.2

JAO 11.3.3 Depth of hole 8 1/4"

Installation of Concrete Anchors

JAO 11.4.1

Torquing Anchors in Concrete

SDR 11.5.1 Proper installation torque value Ft lbs 92.5

JAO 11.5.2

JAO 11.5.3 Actual torque value applied 92 Ft Lbs

JAO 11.5.4

JAO 11.5.5

Embedment

SDR 11.6.1 Maximum projection above concrete 7 3/8"

JAO 11.6.2 Actual projection above concrete 2"

JAO 11.6.3 Meets minimum embedment

ENCLOSURE 13.1

PROCEDURE CHECKLIST

Anchor Substitution

MS/N/A 11.7.1 Engineer Mo Selem Date 9-5-91

N/A 11.7.2

Non Safety-Related Hole Plugging

N/A 11.8.1

11.8.2

Restoration

12.3 Torque wrench serial number ~~OCMNT-26977~~ OCMNT-26973 Cal. Due Date ~~11-6-91~~ 12-10-91

QA Inspector JW Thog Date 9-12-91

ENCLOSURE 13.2
SPACING, EDGE AND END DISTANCE RECOMMENDATIONS

NOTES:

1. Spacing distance shall be defined as "distance between center lines of adjacent anchors."

2. Edge and end distance shall be defined as "distance from centerline of anchor to any change in direction of flush concrete surface for any reason", i.e., core drilled holes, hatch openings, embedded unistrut, or any embedded or cast in place elements that create an edge, end, or corner effect which changes flat flush surface of concrete, UNLESS specified on Design Engineering drawings.

3. IF spacing between an anchor and embedded plate, unistrut, or unused hole does NOT meet minimum edge distance, anchor may be installed so that depth of anchor is equal to its minimum embedment plus depth of embedded plate, unistrut, or unused hole.

Stud, Wedge, and Sleeve Anchors

Anchor Size in Inches	1/4	5/16	3/8	1/2	5/8	3/4	7/8	1	1-1/4
Spacing Distance in Inches	1-3/4	2-1/2	2-5/8	3-1/2	4-3/8	5-1/4	6-1/8	7	8-3/4
Edge and End Distances in Inches	3	3-3/4	4-1/2	6	7-1/2	9	10-1/2	12	15

ENCLOSURE 13.3
ANCHOR DATA SHEET
WEDGE ANCHORS

"A" = Overall Anchor Length
"B" = Minimum Embedment Before Torque
"C" = Maximum Thickness of Material to be Fastened
"D" = Maximum Projection Above Concrete
"E" = Thread Length

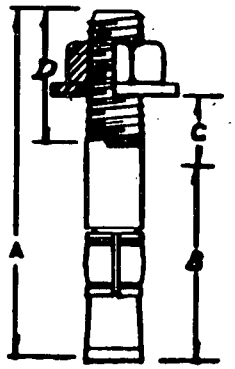

Anchor Size (Dia.) Inches	Catalog Number Carbon Steel	Catalog Number Stainless Steel	Length I.D. Codes	"A" Anchor Length	"B" Minimum Embedment inches	"C" Maximum Thickness inches	"D" Maximum Projection inches	"E" Thread Length inches	Torque Value (Ft-Lbs) Installation	Inspection
1/4	WS-1416	WW-1416	1 A	1-3/4	1-3/8	1/8	7/8	3/4	7.5	5.5
1/4	WS-1422	WW-1422	2 B	2-1/4	1-3/8	3/8	1-3/8	3/4	7.5	5.5
1/4	WS-1432	WW-1432	3 D	3-1/4	1-3/8	1-3/8	2-3/8	3/4	7.5	5.5
3/8	WS-3822	WW-3822	1 B	2-1/4	1-3/4	3/16	1	1-1/8	20	14
3/8	WS-3826	WW-3826	2 C	2-3/4	1-3/4	5/8	1-1/2	1-1/8	20	14
3/8	WS-3830	WW-3830	3 D	3	1-3/4	7/8	1-3/4	1-1/8	20	14
3/8	WS-3836	WW-3836	4 E	3-3/4	1-3/4	1-5/8	2-1/2	1-1/8	20	14
3/8	WS-3850	WW-3850	5 H	5	1-3/4	2-7/8	3-3/4	1-1/8	20	14
1/2	WS-1226	WW-1226	2 C	2-3/4	2-1/8	1/4	1-1/8	1-1/4	35	24.5
1/2	WS-1236	WW-1236	3 E	3-3/4	2-1/8	1-1/4	2-1/8	1-1/4	35	24.5
1/2	WS-1242	WW-1242	4 F	4-1/4	2-1/8	1-3/4	2-5/8	1-1/4	35	24.5
1/2	WS-1254	WW-1254	5 I	5-1/2	2-1/8	2-7/8	3-7/8	1-1/4	35	24.5
1/2	WS-1270	-	7 L	7	2-1/8	4-1/4	5-3/8	1-1/4	35	24.5
5/8	WS-5834	WW-5834	3 E	3-1/2	2-5/8	3/8	1-3/8	1-1/2	67.5	47.5
5/8	WS-5850	WW-5850	5 H	5	2-5/8	1-7/8	2-7/8	1-1/2	67.5	47.5
5/8	WS-5860	WW-5860	6 J	6	2-5/8	2-7/8	3-7/8	1-1/2	67.5	47.5
5/8	WS-5870	WW-5870	7 L	7	2-5/8	3-7/8	4-7/8	1-1/2	67.5	47.5
5/8	WS-5884	WW-5884	8 O	8-1/2	2-5/8	5-3/8	6-3/8	1-1/2	67.5	47.5

ENCLOSURE 13.3
ANCHOR DATA SHEET
WEDGE ANCHORS

"A" = Overall Anchor Length
"B" = Minimum Embedment Before Torque
"C" = Maximum Thickness of Material to be Fastened
"D" = Maximum Projection Above Concrete
"E" = Thread Length

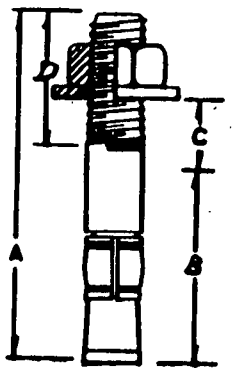

Anchor Size (Dia.) Inches	Catalog Number Carbon Steel	Catalog Number Stainless Steel	Length I.D. Codes	"A" Anchor Length	"B" Minimum Embedment inches	"C" Maximum Thickness inches	"D" Maximum Projection inches	"E" Thread Length inches	Torque Value (Ft-Lbs) Installation	Torque Value (Ft-Lbs) Inspection
3/4	WS-3442	WW-3442	4 F	4-1/4	3-1/4	3/8	1-5/8	1-1/2	92.5	65
3/4	WS-3446	WW-3446	4 G	4-3/4	3-1/4	3/4	2-1/8	1-1/2	92.5	65
3/4	WS-3454	WW-3454	5 I	5-1/2	3-1/4	1-5/8	2-7/8	1-1/2	92.5	65
3/4	WS-3470	WW-3470	7 L	7	3-1/4	2-1/8	4-3/8	1-1/2	92.5	65
3/4	WS-3484	WW-3484	8 O	8-1/2	3-1/4	4-5/8	5-7/8	1-1/2	92.5	65
3/4	WS-34100	WW-34100	1 R	10	3-1/4	6-1/8	7-3/8	1-1/2	92.5	65
7/8	WS-7860	WW-7860	6 J	6	3-3/4	1-5/8	2-7/8	2-1/4	192.5	135
7/8	WS-7880	WW-7880	8 N	8	3-3/4	3-5/8	4-7/8	2-1/4	192.5	135
7/8	WS-78100	WW-78100	1 R	10	3-3/4	5-5/8	6-7/8	2-1/4	192.5	135
1	WS-10060	-	6 J	6	4-1/2	3/4	2-1/8	2-1/4	242.5	170
1	WS-10090	-	9 P	9	4-1/2	3-3/4	5-1/8	2-1/4	242.5	170
1	WS-100120	-	1 T	12	4-1/2	6-3/4	8-1/8	2-1/4	242.5	170
1-1/4	WS-12590	-	9 P	9	5-1/2	2-1/2	4-1/8	3-1/4	325	228
1-1/4	WS-125120	-	1 T	12	5-1/2	5-1/2	7-1/8	3-1/4	325	228

ENCLOSURE 13.4
ANCHOR DATA SHEET
ACORN NUT AND HEX NUT SLEEVE ANCHORS

"A" = Overall Anchor Length
"B" = Minimum Embedment Before Torque
"C" = Maximum Thickness of Material to be Fastened
"D" = Maximum Projection Above Concrete
"E" = Effective Length

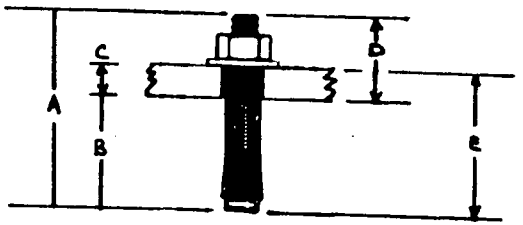

Head Style	Anchor Size	Catalog Number	Thread Dia.	Length I.D. Codes	"A" Overall Length inches	"B" Minimum Embedment inches	"C" Maximum Thickness inches	"D" Maximum Projection inches	"E" Effective Length inches	Torque Value (Ft-Lbs) Installation	Inspection
Acorn Nut	1/4	AN-1405	-	0	5/8	1/2	1/8	-	5/8	3.5	2.5
Acorn Nut	1/4	AN-1413	-	1	1-3/8	1-1/8	1/4	-	1-3/8	3.5	2.5
Acorn Nut	1/4	AN-1422	-	2 B	2-1/4	1-1/8	1-1/8	-	2-1/4	3.5	2.5
Hex Nut	5/16	HN-1614	1/4	1	1-3/4	1-1/4	1/4	3/4	1-1/2	11	8
Hex Nut	5/16	HN-1624	1/4	2 C	2-7/8	1-1/4	1-1/4	1-7/8	2-1/2	11	8
Hex Nut	3/8	HN-3817	5/16	1 A	2-1/8	1-1/2	3/8	7/8	1-7/8	11	8
Hex Nut	3/8	HN-3830	5/16	3 D	3-1/4	1-1/2	1-1/2	2	3	11	8
Hex Nut	1/2	HN-1222	3/8	2 B	2-1/2	1-7/8	3/8	1	2-1/4	22.5	16
Hex Nut	1/2	HN-1230	3/8	3 D	3-5/16	1-7/8	1-1/8	1-13/16	3	22.5	16
Hex Nut	1/2	HN-1240	3/8	4 F	4-3/8	1-7/8	2-1/8	2-7/8	4	22.5	16
Hex Nut	5/8	HN-5822	1/2	2 B	2-3/4	2	1/4	1-1/8	2-1/4	42.5	30
Hex Nut	5/8	HN-5830	1/2	3 D	3-9/16	2	1	1-15/16	3	42.5	30
Hex Nut	5/8	HN-5842	1/2	4 F	4-13/16	2	2-1/4	3-3/16	4-1/4	42.5	30
Hex Nut	5/8	HN-5860	1/2	6 J	6-1/4	2	4	4-5/8	6	42.5	30
Hex Nut	3/4	HN-3424	5/8	2 C	3-1/4	2-1/4	1/4	1-3/8	2-1/2	52.5	37
Hex Nut	3/4	HN-3440	5/8	4 F	4-7/8	2-1/2	1-1/2	2-3/4	4	52.5	37
Hex Nut	3/4	HN-3462	5/8	6 J	6-15/16	2-1/2	3-3/4	4-13/16	6-1/4	52.5	37
Hex Nut	3/4	HN-3480	5/8	8 N	8-11/16	2-1/2	5-1/2	6-9/16	8	52.5	37

ENCLOSURE 13.4
ANCHOR DATA SHEET
FLAT HEAD AND ROUND HEAD SLEEVE ANCHORS

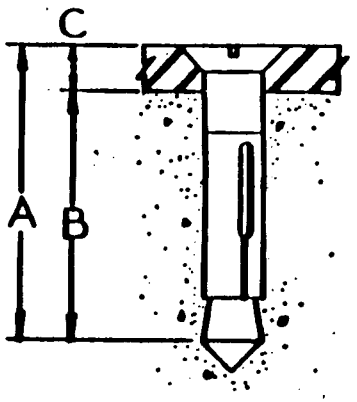

"A" = Overall Anchor Length
"B" = Minimum Embedment Before Torque
"C" = Maximum Thickness of Material to be Fastened

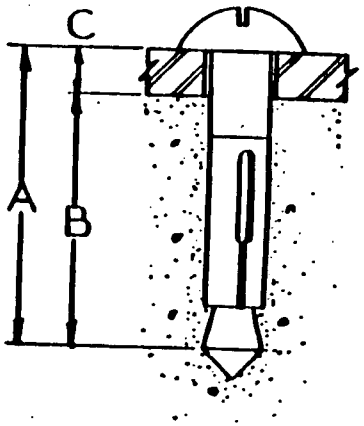

Head Style	Anchor Size	Catalog Number	Thread Dia.	Length I.D. Codes	"A" Overall Length inches	"B" Minimum Embedment inches	"C" Maximum Thickness inches	Torque Value (Ft-Lbs) Installation	Torque Value (Ft-Lbs) Inspection
Flat Head	1/4	FS-1411	3/16	0 A	1-1/2	1-1/8	3/8	3.5	2.5
Flat Head	1/4	FS-1420	3/16	1 B	2-1/4	1-1/8	1-1/8	3.5	2.5
Flat Head	1/4	FS-1430	3/16	2 D	3-1/8	1-1/8	2	3.5	2.5
Flat Head	1/4	FS-1440	3/16	3 F	4	1-1/8	3	3.5	2.5
Flat Head	1/4	FS-1452	3/16	4 H	5-1/4	1-1/8	4-1/4	3.5	2.5
Flat Head	3/8	FS-3826	5/16	2 C	2-7/8	1-1/2	1-3/8	9	6.5
Flat Head	3/8	FS-3840	5/16	4 F	4	1-1/2	2-5/8	9	6.5
Flat Head	3/8	FS-3850	5/16	5 H	5	1-1/2	3-5/8	16.5	12
Flat Head	3/8	FS-3860	5/16	6 J	6	1-1/2	4-5/8	16.5	12
Round Head	1/4	RS-1411	3/16	0	1-1/2	1-1/8	1/4	3.5	2.5
Round Head	1/4	RS-1420	3/16	1 B	2	1-1/8	7/8	3.5	2.5
Round Head	1/4	RS-1426	3/16	2 C	2-7/8	1-1/8	1-3/4	3.5	2.5
Round Head	1/4	RS-1436	3/16	3 E	3-3/4	1-1/8	2-5/8	3.5	2.5
Round Head	3/8	RS-3824	5/16	2 C	2-5/8	1-1/2	1-1/8	16.5	12
Round Head	3/8	RS-3836	5/16	2 E	3-5/8	1-1/2	2-1/8	16.5	12

ENCLOSURE 13.4
ANCHOR DATA SHEET
MISCELLANEOUS SLEEVE ANCHORS

Head Style	Catalog Number	Anchor And Drill Size	"A" Anchor Length	"B" Minimum Embedment	"C" Maximum Thickness of Material To Be Fastened	*Ultimate Load Capacity in 3500 PSI Stone Aggregate Concrete (Reduce 30% for Structural Light-Weight Aggregate Concrete) Pullout LBS.	Shear LBS.
THRESHOLD FLAT HEAD	TH-1420	1/4 inch	2-1/4 inch	1-1/8 inch	1-1/8 inch	2080	1125
PHILLIPS ROUND HEAD	PR-1420	1/4 inch	2 inch	1-1/8 inch	7/8 inch	2080	1125
	PR-1426	1/4 inch	2-7/8 inch	1-1/8 inch	1-5/8 inch	2080	1125
TIE WIRE	TW-1614	5/16 inch	1-1/2 inch	1-1/2 inch	1/4 inch Hole	2540	1950
MULTIPLE USE ANCHOR	SA-1625	5/16 inch	1-1/2 inch	1-1/4 inch	1/4 inch	2540	1950
	SA-1237	1/2 inch	2-1/4 inch	1-7/8 inch	3/8 inch	5330	4300
	SA-5850	5/8 inch	2-1/4 inch	2 inch	1/2 inch	7200	7500
FILLER SLEEVE	160F	5/16 inch	1-1/16 inch				
	120F	1/2 inch	5/8 inch				
	581F	5/8 inch	2 inch				
STAINLESS STEEL SLEEVE ANCHORS (Heads Only Are Made Of Stainless Steel)							
STAINLESS FLAT HEAD	FF-1420	1/4 inch	2-1/4 inch	1-1/8 inch	1-1/8 inch	2080	1125
STAINLESS THRESHOLD	TT-1411	1/4 inch	1 1/2 inch	1 1/8 inch	3/8 inch	2080	1125
	TT-1420	1/4 inch	2 1/4 inch	1 1/8 inch	1 1/8 inch	2080	1125
STAINLESS ROUND HEAD	RR-1420	1/4 inch	2 inch	1 1/8 inch	7/8 inch	2080	1125

"A" = Overall Anchor Length
"B" = Minimum Embedment Before Torque
"C" = Maximum Thickness of Material to be Fastened

ENCLOSURE 13.5
NWS LENGTH CODE JUSTIFICATION

Cat. #	Size in Inches	Code
NWS-1416	1/4 x 1-3/4	A
NWS-1422	1/4 x 2-1/4	B
NWS-1432	1/4 x 3-1/4	D
NWS-3822	3/8 x 2-1/4	B
NWS-3826	3/8 x 2-3/4	C
NWS-3830	3/8 x 3	D
NWS-3836	3/8 x 3-3/4	E
NWS-3850	3/8 x 5	H
NWS-1226	1/2 x 2-3/4	C
NWS-1236	1/2 x 3-3/4	E
NWS-1242	1/2 x 4-1/4	F
NWS-1254	1/2 x 5-1/2	I
NWS-1270	1/2 x 7	L
NWS-5834	5/8 x 3-1/2	E
NWS-5850	5/8 x 5	H
NWS-5860	5/8 x 6	J
NWS-5870	5/8 x 7	L
NWS-5884	5/8 x 8-1/2	O

Cat. #	Size in Inches	Code
NWS-3446	3/4 x 4-3/4	G
NWS-3454	3/4 x 5-1/2	I
NWS-3470	3/4 x 7	L
NWS-3484	3/4 x 8-1/2	O
NWS-34100	3/4 x 10	R
NWS-7860	7/8 x 6	J
NWS-7880	7/8 x 8	N
NWS-78100	7/8 x 10	R
NWS-10060	1 x 6	J
NWS-10090	1 x 9	P
NWS-100120	1 x 12	T
NWS-12590	1-1/4 x 9	P
NWS-125120	1-1/4 x 12	T

ENCLOSURE 13.6

EXTENSION ADAPTOR FORMULA

NOTE: When the adapter or extension is at a 90 degree angle to the torque wrench (pos 2), (B) measurement is zero, and the dial setting is the same as the torque required.

Where T = Torque required on nut
DS = Dial setting or wrench click point
A = Effective torque wrench length
B = Adapter effective length

FOR 90 DEGREES (POS 2)

$$DS = \frac{A \times T}{A + B}$$

T = 100
DS = Unknown
A = 18 inches

EXAMPLE

$$DS = \frac{18 \times 100}{18 + 0} = \frac{1800}{18} = 100$$

DS = 100 ft-lb

FOR GREATER THAN 90 DEGREES (POS 1)

$$DS = \frac{A \times T}{A + B}$$

T = 100
DS = Unknown
A = 18 inches
B + 6 inches

EXAMPLE

$$DS = \frac{18 \times 100}{18 + 6} = \frac{1800}{24} = 150$$

DS = 75 ft-lb

FOR LESS THAN 90 DEGREES (POS 3)

$$DS = \frac{A \times T}{A - B}$$

T = 100
DS = Unknown
A = 18 inches
B = 6 inches

EXAMPLE

$$DS = \frac{18 \times 100}{18 - 6} = \frac{1800}{12} = 150$$

DS = 150 ft-lb

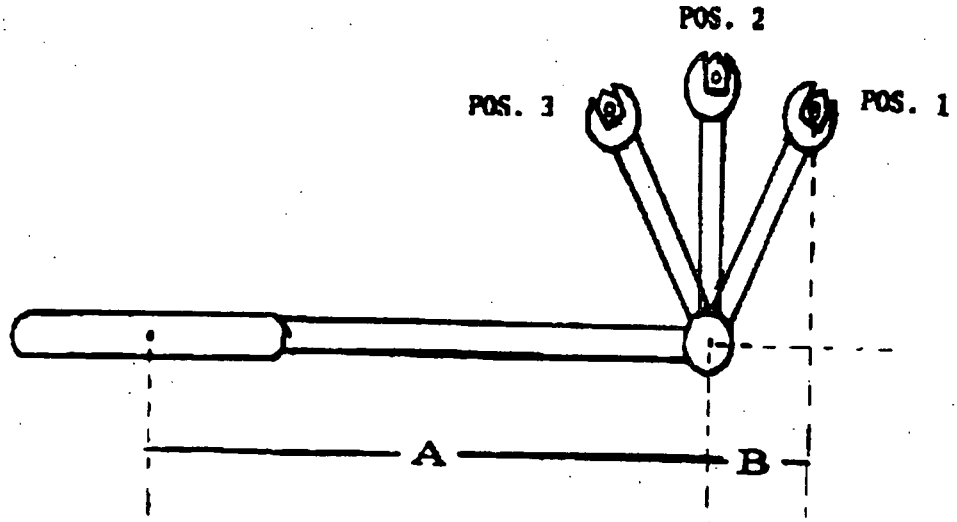

Torque Values	Torque Values	Signature/Date

Form 34731 (R5-88)

WORKING COPY

Duke Power Company
PROCEDURE PROCESS RECORD

(1) ID No. MP/0/A/3019/004
Change(s) 35 to 35 Incorporated

TASK # MM-OT-6268

PREPARATION

(2) Station OCONEE

(3) Procedure Title HANGERS - PIPE - REMOVAL, INSTALLATION, OR MODIFICATION

(4) Prepared By Larry Gibson Date 10-26-90

(5) Reviewed By M W Adams JHB Date 10-30-90

Cross-Disciplinary Review By _____ N/R MWN

(6) Temporary Approval *(if necessary)*

By _____ (SRO) Date _____

By _____ Date _____

(7) Approved By W W Foster Date 11/7/90

(8) Miscellaneous

Reviewed/~~Approved~~ QA By Wm McClure Date 10/31/90

Reviewed/Approved By Tommy King Date 11-5-90

(9) Comments (For procedure reissue indicate whether additional changes, other than previously approved changes, are included. Attach additional pages, if necessary.)
Additional Changes Included. ☐ Yes ☒ No

(10) Compared with Control Copy N/A - REFER TO STEP 6.1 Date N/A

(11) Requires change to FSAR not identified in 10CFR50.59 evaluation? ☐ Yes ☒ No
If "yes", attach detailed explanation.

Completion

(12) Date(s) Performed 9-9-91

(13) Procedure Completion Verification

☒ Yes ☐ N/A Check lists and/or blanks properly initialed, signed, dated or filled in N/A or N/R, as appropriate?

☒ Yes ☐ N/A Listed enclosures attached?

☒ Yes ☐ N/A Data sheets attached, completed, dated and signed?

☐ Yes ☒ N/A Charts, graphs, etc. attached and properly dated, identified and marked?

☒ Yes ☐ N/A Procedure requirements met?

Verified By Robert E Baker Date 9-12-91

(14) Procedure Completion Approved Leonard Brock Date 9-14-91

(15) Remarks *(attach additional pages, if necessary)*

WORK PERFORMED BY

Joe Shirley
Steve Roberts
Johnny Boggs

DATE 9-9-91

UNIT 1

HANGER # 1-54A-0-435B-DE10

W.R. # 91015417

DUKE POWER COMPANY

OCONEE NUCLEAR STATION

HANGERS - PIPE - REMOVAL, INSTALLATION, OR MODIFICATION

1.0 Purpose

To provide instructions for removing, installing, repairing or modifying pipe hangers. This procedure provides documentation for one hanger ONLY. Each hanger to be repaired requires a separate copy of this procedure.

2.0 References

2.1 Source Documents

2.1.1 ONS Welding Manual

2.1.2 Station Directive 4.2.3

2.1.3 Appropriate Hanger Sketch

2.1.4 Design Spec. OS-0027.00-00-0001, "Specification for Safety Related Pipe Supports"

2.1.5 Design Spec. OS-0027.00-00-0002, "Procedure Supplemental Requirements and Tolerances for Fabrication and Erection of Pipe Supports And Restraints"

2.2 References Needed to Perform Procedure

2.2.1 MP/0/A/1800/035, "Anchor - Concrete - Installation"

2.2.2 MP/0/A/1800/024, "Grouting: Controlling Procedure For Safety-Related Structural Grouting"

2.2.3 MP/0/A/3019/009, "Hangers: Sway Struts and Snubber Extension Pieces - Field Modification"

2.2.4	MP/O/A/3018/002,	"Snubbers - Grinnell - Hydraulic - Removal And Installation"
2.2.5	MP/O/A/3018/058,	"Snubbers - Pacific Scientific - Mechanical - Removal And Installation"
2.2.6	MP/O/A/3019/005,	"Hangers - Can Spring - Removal, Repair, Installation, Adjustment, Locking And Unlocking"
2.2.7	MP/O/A/3019/006,	"Hanger - Grinnell - Constant Support - Adjustment"
2.2.8	MP/O/A/1800/043,	"Abandoned Holes - Repair - 3 Inches Or Less With Sikatop Or Grout"
2.2.9	MP/O/A/3019/008,	"Hangers - Grinnell - Constant Support - Removal And Installation - Travel Stops - Installation and Removal"
2.2.10	MP/O/A/1800/061,	"Structural Steel - Bolted and Welded - Removal and Installation"
2.2.11	MP/O/B/1800/095,	"SSF CO_2 Fire Protection System - Isolation"

3.0 Personnel Requirements

Refer to Section III of Station Work Request.

4.0 Safety Considerations

4.1 Equipment Clearance and Isolation

4.1.1 Permission to release equipment for maintenance shall be granted by Unit Shift Supervisor.

4.1.2 Personnel performing this procedure should, to the best of their ability, verify safe condition of equipment on which maintenance is to be performed AND verify safe positions of valves, breakers, etc.

4.2 Radiation Protection Considerations

IF (S)RWP is required, Responsible Supervisor shall ensure Technicians understand AND implement Radiation Protection considerations and ALARA methods.

4.3 Special Safety Considerations

4.3.1 When a pipe support is removed, ensure pipe is properly supported to prevent piping or equipment damage.

4.3.2 IF necessary to remove insulation AND insulation can NOT be positively identified as non asbestos, contact Safety Group prior to removal to determine if insulation contains asbestos.

4.3.3 Welding and Burning Permit may be required.

5.0 Unit Status

SOR 5.1 Verify clearance to begin work in Section II of Station Work Request, "Clearance to Begin Work" has been obtained."

6.0 Prerequisites

SOR 6.1 Compare "Working Copy" to "Control Copy"; this SHALL be performed every 14 calendar days UNTIL procedure is completed.

Initial Comparison Date 9-9-91 By Steve Roberts

Date____/____ Date____/____ Date____/____ Date____/____

SOR 6.2 Obtain approved sketch of hanger from Document Control (as built) or from Accountable Engineer (NSM) and attach to this procedure. In some instances, hangers on existing piping less than 2 1/2 inches in diameter will not have a sketch. In this case, contact the Accountable Engineer so a field drawn sketch can be generated and a photo made.

SOR 6.3 IF necessary, contact RP for coverage; ~~(S)~~RWP # 1624.

Person Contacted JANET MARTIN Date 9-9-91

SOR 6.4 Contact QA prior to starting job.

Person Contacted Jim Turner Date 9-9-91

KEB 6.5 Responsible Supv. Supervisor SHALL review this procedure AND mark all steps known to be NOT applicable, "N/A."

NA 6.6 IF work may affect a fire barrier wall or penetration, contact engineer responsible for fire protection to perform the following:

A. Make determination of fire barrier status.

B. Advise as to appropriate action necessary.

Person Contacted N/A Date N/A

NA 6.7 IF work is to be performed inside the Diesel Generator Room or adjoining areas of the SSF and any conditions exist which prevent immediate personnel egress or requires egress times of greater than 60 seconds, initiate MP/O/B/1800/095.

NA 6.8 IF Design sketch or drawing specifies NF Material, label or tag ALL NF Material as such. This identification shall NOT be removed OR painted over UNTIL final QA Inspection is complete.

NA 6.9 IF working on snubbers, (e.g., repair, modification, removal, or installation) notify Snubber Accountable Engineer prior to starting work.

Person Contacted N/A Date N/A

NA 6.10 IF 325 or 490 bolting material is specified on sketch or drawing, contact Responsible Hanger Engineer or QA Tech Support for guidance.

Person Contacted NA Date NA

NA 6.11 IF any torque values are given on sketch or drawing for bolted connections, contact QA for "in process" inspection. (Refer to 12.3-B for QA sign off).

NA 6.12 Review Sections 11.7 and 11.8. IF welding is necessary, steps 11.7.1 and 11.8.1, A through E may be performed anytime prior to welding.

NA 6.13 If welding on piping, contact Accountable Welding Engineer to determine if piping needs to be drained.

Person Contacted NA Date NA

NA 6.14 IF welded attachment is to be added within last 12 inches of an embedded strip plate, complete Enclosure 13.1.

JAO 6.15 List below the type of work to be performed using this procedure (e.g., repair, permanent removal, new installation, modification, temporary removal and reinstallation).

Type of work Modification of hangers

6.16 Responsible Supervisor or designee SHALL verify Safety Considerations, Section 4.0, have been complied with.
Supv.

7.0 Repair Parts

Document all parts used in Sections IV and V of Station Work Request.

8.0 Special Tools

8.1 Red Head Removal Tool

8.2 Bolt Removal Tools

8.3 Scaffolding

8.4 Torque Wrench

8.5 RTV 732

8.6 Precision Tools

Type	Used For	Serial #	Cal. Due. Date
250 Ft Lbs	Torque Base Plate	CMWT # 26971	11-6-91

9.0 Acceptance Requirements

JHC 9.1 Pipe Support removal, repair, and installation will be made in accordance with this procedure and Oconee Specification OS-0027.00-00-0002.

JHC 9.2 Appropriate MWP Form (MWP-1 or MWP-4) will be completed for each weld and all required inspections will be acceptable.

JHC 9.3 Discrepancies or drawing deviations found will be recorded on Enclosure 13.4, "Discrepancy Worksheet."

10.0 Interference Items

None

11.0 Procedure

NOTES:
1. Steps in this procedure may be performed out of sequence.
2. If discrepancies are noted, approved hanger drawings supersede hanger specifications or guidelines of procedures.
3. Threaded components SHALL meet the following requirements:
   A. All threaded components in NF boundary SHALL have a suitable locking device. A jam nut (either full or half) is recommended, but one of the following alternatives may be used:
      - Lockwire
      - Lock pin
      - Staked threads (using center punch)
      - Tack weld on nut.
   B. All threaded components outside NF boundary shall have a locking device whenever specified on sketch.
   C. Threaded members (bolts, nuts, turnbuckles, etc.) shall have full thread engagement with internally threaded member.

4. Clearances SHALL meet the following requirements:

NOTE: Refer to Figure A below.

A. Whenever sketch indicates a 1/16 inch clearance on each side of pipe (Refer to figure A below), this may be interpreted to mean that cumulative gap (A & B) may range from ONLY visual clearance (minimum) to 1/8 inch (maximum).

FIGURE A

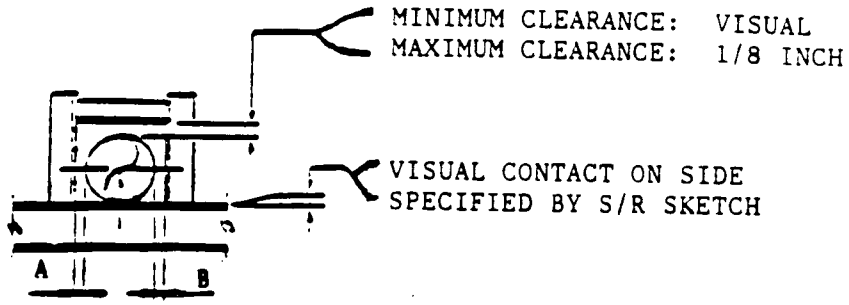

B. Piping may touch one side BUT NOT both.

C. EITHER "A" OR "B" may be in visual contact BUT NOT both.

A + B = Visual Clearance (Minimum)

A + B = 1/8" inch (Maximum)

NOTE: Refer to figure B below.

D. Loose fit U-bolts shall have clearances shown below (Refer to Figure B) UNLESS otherwise specified.

FIGURE B

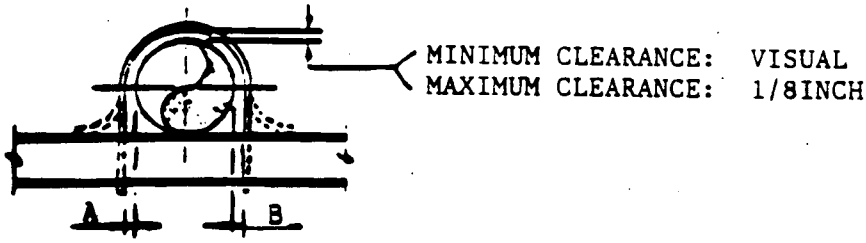

E. Gaps shown on a sketch to accommodate thermal movement (i.e., any gap between pipe and support steel greater than 1/16 inch) shall have a tolerance of - 0.000 to + 1.000 inch.

F. IF possible, gaps NOT directly shown on Support/Restraint (S/R) sketches should be determined from given information, then tolerance in Step E above should be applied.

G. New S/Rs shall be erected such that:

1. Clearance between any portion of new S/R and existing piping is a minimum of 2 inches.

2. Clearance between new S/R and existing S/Rs OR any other existing permanent structures is a minimum of 1/8 inch.

5. Concrete beneath baseplate of new floor mounted S/R shall be chipped for grouting prior to bolting S/R down.

JHO 11.1 Initially identify AND independently verify correct component.

Initial Identification Joe Shields Date 9-10-91

Independent Verification Johnny Boggs Date 9-10-91

11.2 Permanent Removal Of Anchors

11.2.1 If a hanger with anchors is to be permanently removed, perform the following:

_____A. Refer to Section 2.0 and remove hanger in accordance with appropriate procedure.

_____B. Install nut/bolt on anchor and have repainted.

_____C. IF step B cannot be performed and ANY of the following conditions exist, remove anchor and grout hole (Reference MP/O/A/1800/043).

- Trip hazard
- Obstruction
- Bolt/nut will not screw onto anchor completely.

11.3 Replacement Of Self Drilling Anchors

_____11.3.1 Move pipe support plate out of way by rotating or removing hanger.

NOTE: In Step 11.3.2, it may be necessary to drill bolt out.

_____11.3.2 Remove bolts as necessary for anchor inspection.

_____11.3.3 Visually inspect all embedded anchor shells.

NA 11.3.4 Using Enclosure 13.2, remove all anchors requiring replacement. Record total number removed _____.

11.3.5 Clean out holes.

11.3.6 Install replacement anchors in accordance with design sketch and appropriate procedure MP/0/A/1800/035.

11.4 Installation Of Wedge And Sleeve Anchors

JAD 11.4.1 Install all wedge and sleeve anchors in accordance with appropriate procedure MP/0/A/1800/035.

11.5 Performing Anchor Torque

NOTE: Section 11.5 is to be used if a hanger is being reinstalled using existing anchors. New anchors will be torqued and documented on MP/0/A/1800/035.

JAD 11.5.1 Using information on Enclosure 13.3, determine proper torque value for anchor and record below:

Torque Value 92.5 Size WS 34/00

11.5.2 Torque anchor to value specified in Step 11.5.1.

QA Inspector [signature] Date 9-12-91

11.6 Removing Existing Piping Attachment Welds

NA 11.6.1 Contact Accountable Engineer or Welding Tech. Support to provide required documentation.

Person Contacted N/A Date N/A

11.6.2 Remove existing pipe attachment welds.

11.6.3 Have QA perform NDE test on areas that had welds removed.

QA Inspector N/A Date N/A

11.7 Performing Attachment Welds To Pipe

NOTES:
1. General welding requirements are specified in ONS Welding Program Manual and Design Specification OS-0027.00-00-0002.
2. All NF boundary hangers require QA Welding Inspector to inspect for cleanliness AND fitup BEFORE welding begins AND approve all welding after completion.
3. Reference Sections II AND III of ONS Welding Manual.

_____11.7.1 If welding, (pipe attachments), is necessary, perform the following:

A. Obtain Welding and Burning Permit as necessary.

B. Have Accountable Engineer issue Form MWP-1.

C. IF weld is non QA, DO NOT perform Steps D, and E. Proceed directly to Step F.

D. Contact QA Technical Support for the assignment of required NDE and hold points on MWP-1.

E. Contact ANI/ANII for assignment of hold points.

F. Have welding performed in accordance with MWP-1.

_____11.7.2 Perform attachment welding to piping in accordance with Form MWP-1 AND Design Specifications.

_____11.7.3 Verify all required inspections are performed and documented on MWP-1.

11.8 Performing Hanger Welds

NOTES:
1. General welding requirements are specified in ONS Welding Program Manual and Design Specification OS-0027.00-00-0002.
2. All NF boundary hangers require QA Welding Inspector to inspect for cleanliness AND fitup BEFORE welding begins AND approve all welding after completion.
3. Reference Section V of ONS Welding Manual.

_____11.8.1 If welding, (hanger components other than pipe attachments), is necessary, perform the following:

A. Obtain Welding and Burning Permit as necessary.

B. Have Accountable Engineer issue Form MWP-4.

C. IF weld is non QA, DO NOT perform Steps D, and E. Proceed directly to Step F.

D. Contact QA Technical Support for the assignment of required NDE and hold points on MWP-4.

E. Contact ANI/ANII for assignment of hold points.

F. Have welding performed in accordance with MWP-4.

_____11.8.2 Perform welds on hanger in accordance with Form MWP-4 AND Design Specifications (hanger sketches, drawings, VNs).

_____11.8.3 Verify all required inspections are performed and documented on MWP-4.

11.9 Installation Of U-Bolts

FIGURE 1

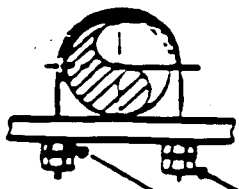

TIGHT FIT

FIGURE 2

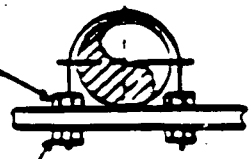

LOOSE FIT

_____11.9.1 For tight fit installation, perform the following: (Refer to Figure 1 above).

A. Record size of U-Bolt _____.

B. Determine torque value from table below.

Torque Value _____

C. Torque primary nut and record actual torque value used Final Torque _____

_____11.9.2 For loose fit installation, tighten primary nut snug plus one quarter turn. (Refer to Figure 2 above).

U-Bolt Rod Size (inch)	Torque Value(in-lb) MIN-MAX
1/4	13 (11-15)
3/8	46 (42-50)
1/2	61 (55-67)
5/8	76 (69-83)
3/4	92 (83-101)
7/8	107 (97-117)
1	122 (110-134)

NOTE: 1. Where jam nut cannot be installed as shown in Figure 2 above, (e.g., for pipes 1 inch and smaller) jam nut may be omitted with primary nut being tack welded to support steel member.

_____11.9.3 Contact QA Tech. Support Group before tack welding to determine if MWP-4 is required.

11.10 Installation Of Struts

NOTES:
1. For a single strut, allowable deviation from load axis is ± 5 degrees. Load axis for a single strut is defined as a horizontal OR vertical line perpendicular to centerline of pipe at point of attachment.
2. When two struts are attached at the same pipe location, angle between them should be maintained as follows:
   - Tolerance for included angular misalignment is ± 5 degrees.
   - IF one strut is moved, the other strut should be moved by approximately same amount.

_____11.10.1 IF necessary, modify strut length in accordance with Design Sketch and MP/0/A/3019/009.

_____11.10.2 Install strut in accordance with Design Sketch.

11.11 Installation Of Snubbers

_____11.11.1 IF necessary, modify snubber extension piece in accordance with MP/0/A/3019/009.

_____11.11.2 Install Mechanical snubbers in accordance with MP/0/A/3018/058.

_____11.11.3 Install Hydraulic snubbers in accordance with MP/0/A/3018/002.

11.12 Installation Of Springs

_____11.12.1 Install variable springs in accordance with MP/0/A/3019/005.

_____11.12.2 Install constant support springs in accordance with MP/0/A/3019/006 AND MP/0/A/3019/008.

12.0 Restoration

NA RCB 12.1 IF necessary, grout structures in accordance with MP/0/A/1800/024 or MP/0/A/1800/043.

JAO 12.2 Verify plastic ID is tag installed in visible location and attached with RTV 732 or other suitable means.

12.3 Have QA verify the following:

A. Hanger is properly installed in accordance with this procedure, applicable sketch or drawing, and applicable QA procedures.

QA Inspector [signature] Date 9-12-91

B. Miscellaneous torque requirements have been met. Refer to Step 6.11.

QA Inspector [signature] Date _____

N/A 12.4 Have Responsible Supervisor verify any temporary supports erected to aid work have been removed.

Responsible Supervisor N/A Date N/A

JAO 12.5 Verify hanger is returned to service.

Verified By Joe Oldfield Date 09-10-91

Independently Verified By Johnny Boggs Date 09-10-91

JAO 12.6 Verify work area has been cleaned and all tools have been properly stored.

13.0 Enclosures

13.1 Embedded Strip Plate Ultrasonic Testing (UT) Requirements

13.2 Self-Drill Replacement Guide (Two Pages)

13.3 Torque Values For Wedge Anchors (WS & WW), Hex Nut (HN), Acorn Nut (AN), Flat Head (FS), and Round Head (RS) Sleeve Anchors and Self-Drilling Anchors. (Five Pages)

13.4 Discrepancy Worksheet

13.5 Log Sheet

ENCLOSURE 13.1

EMBEDDED STRIP PLATE ULTRASONIC TESTING (UT) REQUIREMENTS

NOTE: For all attachments being made to the last 12" of an embedded strip plate, (excluding plates in the SSF Building), a UT Examination shall be performed to verify stud locations.

(Step 6.14)

Ultrasonic Testing Requirements for Embedded Strip Plates

_____ Verify UT Examination has been performed for plate end which is being considered for attachment.

_____ Record final results of UT Examination below.

_____ Nelson Stud locations are / are not (circle one) in conformance with generic Nelson Stud details on design drawings.

Comments _____

_____

_____

_____

_____

_____ Supply a copy of UT Data Sheet to Station Accountable Engineer.

QA Inspector _____ Date _____

_____ Accountable Engineer to supply a copy of UT Data Sheet to Design Engineer.

ENCLOSURE 13.2

SELF-DRILL REPLACEMENT GUIDE

DIMENSIONS IN INCHES

SELF DRILL:	1/4	5/16	3/8	1/2	5/8	3/4	7/8
WEDGE:	1/2	1/2	5/8	3/4	7/8	1	1¼

NOTES:

1. On some plates it may be necessary to increase hole size so larger stud may slide through. Any plate requiring modification shall be modified by drilling a hole in plate connection equal to nominal diameter of replacement anchor plus 1/16 inch. Care shall be exercised to ensure that NO damage is done to concrete during this modification.

2. Page 2 of this enclosure shows a tool for use in removing self-drill anchors.

INSTRUCTIONS:

To remove self-drill anchors, proceed as follows:

1. Insert tool into shell anchor turning clockwise UNTIL tool comes in contact with embedded expansion plug. Continue turning UNTIL shell is disengaged from expansion plug.

2. Remove shell by carefully jacking shell or use test jack to remove shell.

3. Remove plug.

ENCLOSURE 13.2
SELF-DRILL REPLACEMENT GUIDE

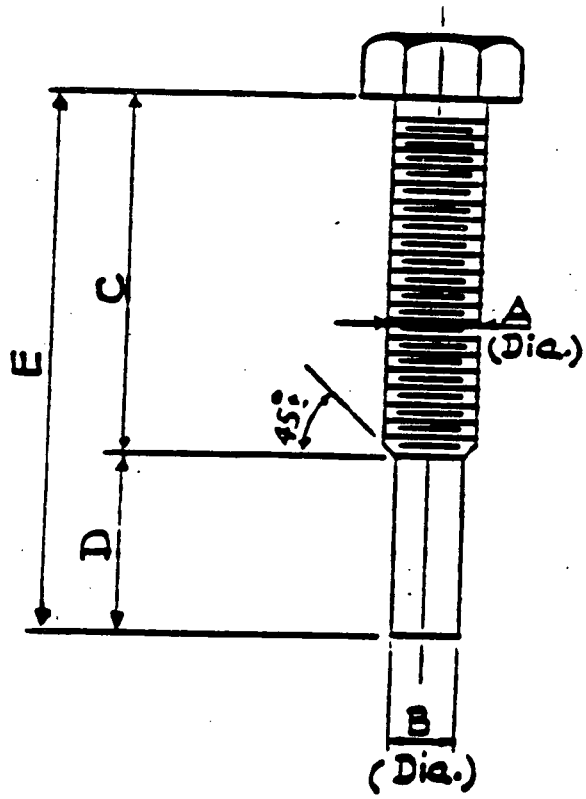

TOOL FOR REMOVING SELF-DRILLING ANCHOR

TOOL SCHEDULE

DIMENSION IN INCHES

A	B	C	D	E
1/4	1/8	1-1/2	1/2	2
5/16	3/16	2	1/2	2-1/2
3/8	1/4	2-1/2	1/2	3
1/2	5/16	2-3/4	3/4	3-1/2
5/8	7/16	3-1/2	1	4-1/2
3/4	1/2	3-1/2	1-1/2	5
7/8	5/8	4-1/2	1-1/2	6

ENCLOSURE 13.3

TORQUE VALUES FOR WEDGE (WS & WW) ANCHORS

NOTE: Torque SHALL be applied to anchor with threads in a clean, dry (unlubricated) condition.

Catalog Number	Anchor Number	Torque Size	Ft-Lbs
WS-1416	WW-1416	1/4ϕ	5-10
WS-1422	WW-1422		
WS-1432	WW-1432		
WS-3822	WW-3822	3/8"ϕ	15-25
WS-3826	WW-3826		
WS-3830	WW-3830		
WS-3836	WW-3836		
WS-3850	WW-3850		
WS-1226	WW-1226	1/2"ϕ	30-40
WS-1236	WW-1236		
WS-1242	WW-1242		
WS-1254	WW-1254		
WS-1270	-------		
WS-5834	WW-5834	5/8"ϕ	60-75
WS-5850	WW-5850		
WS-5860	WW-5860		
WS-5870	WW-5870		
WS-5884	WW-5884		
WS-3442	WW-3342	3/4"ϕ	85-100
WS-3446	WW-3446		
WS-3454	WW-3454		
WS-3470	WW-3470		
WS-3484	WW-3484		
WS-34100	WW-34100		
WS-7860	WW-7860	7/8"ϕ	185-200
WS-7880	WW-7880		
WS-78100	WW-78100		
WS-10060	--------	1"ϕ	235-250
WS-10090	--------		
WS-100120	--------		
WS-12590	--------	1-1/4"ϕ	300-350
WS-125120	--------	1-1/4"ϕ	300-350

ENCLOSURE 13.3

TORQUE VALUES FOR HEX NUT (HN) AND ACORN NUT (AN) SLEEVE ANCHORS

NOTE: Torque SHALL be applied to anchor with threads in a clean, dry (unlubricated) condition.

Catalog Number	Anchor Size (inches)	Torque Ft-Lbs
HN-1614 HN-1624	5/16"ϕ	6-8
HN-3817 HN-3830	3/8"ϕ	10-12
HN-1222 HN-1230 HN-1240	1/2"ϕ	20-25
HN-5822 HN-5830 HN-5842 HN-5860	5/8"ϕ	40-45
HN-3424 HN-3440 HN-3462 HN-3480	3/4"ϕ	50-55
AN-1413	1/4"ϕ	3-4
AN-1405	1/4"ϕ	3-4
AN-1422	1/4"ϕ	3-4

ENCLOSURE 13.3

TORQUE VALUES FOR FLAT HEAD (FS) SLEEVE ANCHORS

NOTE: Torque SHALL be applied to anchor with threads in a clean, dry (unlubricated) condition.

Catalog Number	Anchor Size	Torque Ft-Lbs
FS-1411 FS-1420 FS-1430 FS-1440	1/4"ϕ	3-4
FS-1452 FS-1624 FS-1634	5/16"ϕ	8-10
FS-3826 FS-3340 FS-3850 FS-3860	3/8"ϕ	15-18

ENCLOSURE 13.3

TORQUE VALUES FOR ROUND HEAD (RS) SLEEVE ANCHORS

NOTE: Torque SHALL be applied to anchor with threads in a clean, dry (unlubricated) condition.

Catalog Number	Anchor Size	Torque Ft-Lbs
RS-1411 RS-1420 RS-1426 RS-1436	1/4"ϕ	3-4
RS-1623 RS-1633	5/16"ϕ	8-10
RS-3824 RS-3836	3/8"ϕ	15-18

Hanger # _____

Rev # _____

W.R. # _____

NSM/PART # _____ / _____

ENCLOSURE 13.4

DISCREPANCY WORKSHEET

NOTE:

1. Additional copies may be made.
2. Originator shall complete title block, problem description, origination signature, and forward Enclosure 13.4 with package to Responsible Supervisor, Responsible Engineer or designee as appropriate for problem identified.
3. Responsible Supervisor will assure that any corrective work is completed correctly before requesting QA inspection sign-off.
4. Discrepancies falling under scope of PIR program shall be reported per S.D.#2.8.1(T) AND/OR QA-125.

Prob. #	Problem Description	Originated by/date	Action / Description	Corrected by/date	QA Inspected by/date

ENCLOSURE 13.3

TORQUE VALUES FOR SELF-DRILLING ANCHORS

NOTE: These torque values are provided for cases where torque of existing self-drill anchor is necessary. All new anchor installations are to be wedge or sleeve type anchors.

SELF-DRILLING ANCHORS

Minimum Thread Engagement And Reinstallation Torque for Bolts

Bolt Size (inch):	1/4	5/16	3/8	1/2	5/8	3/4	7/8
Thread Engagement	1/4	5/16	3/8	3/8	7/16	1/2	1/2
Torque (ft-lb):	5	7	11	22	28	54	81

ENCLOSURE 13.5
LOG SHEET

<u>NOTE</u>: Additional copies may be made as necessary.

Date / Time	Remarks	Initials

DUKE POWER COMPANY

Request For Relief From
Inservice Inspection Requirement

Station: Oconee

Unit: 1, 2, and 3

Reference Code: ASME Boiler and Pressure Vessel Code, Section XI 1980 Edition through Winter 1980 Addenda

I. Component for which exemption is requested:

a. Name and Identification Number:
Core Flood Nozzle-to-Safe End and Safe End-to-Pipe Welds Drawing OM-201-92

Isometrics: System 53A, Iso 1, Part 2 (Unit 1) Iso 15, Part 1 (Unit 3)
Iso 2, Part 3 (Unit 1) Iso 16 (Unit 3)
Sheet 8, Part 2 (Unit 2)
Sheet 8, Part 3 (Unit 2)

b. Function:

Provides reactor vessel core flooding capability

c. ASME Section III Code Class:

Class 1

d. Valve Category:

N/A

II. Reference Code Requirement that has been determined to be impractical:

Table IWB-2500-1; Category B-F; Item B5.10
Surface examination

III. Basis for Requesting Relief:

Relief requested from surface examination only.

Approximately 40 man-hours would be required to prepare each of the two core flood nozzle safe ends for inspection. The preparation would involve removal of the refueling canal seal plate, shielding bricks, shielding supports in the nozzle

DUKE POWER COMPANY

Request For Relief From
Inservice Inspection Requirement

III. Basis for Requesting Relief (cont.)

area, and insulation. The radiation levels in this area are expected to be 0.5-1 R/hr. An alternative approach is to enter from the bottom of the vessel and build a scaffold approximately 30 feet high to reach the nozzles. This approach would require approximately 80 man-hours, 40 in the 0.5-1 R/hr. area and the other 40 in the 1-2 R/hr. radiation present at the bottom of the reactor vessel, for a total exposure of 60-120 man-Rem. Shielding is considered impractical in this area. Any remote inspection would require practically the same preparation work.

IV. Alternate Examination:

Welds will be inspected by UT from the inside surface. This will provide adequate assurance of weld integrity at the OD surface.

V. Implementation Schedule:

All core flood nozzle-to-safe end and safe end-to-pipe welds will be inspected at or near the end of the second ten-year interval.

DUKE POWER COMPANY

Request For Relief From
Inservice Inspection Requirement

Station: Oconee

Unit: Units 1, 2, and 3

Reference Code: ASME Boiler & Pressure Vessel Code Section XI
1980 Edition including Addenda through Winter 1980

I. Component for which exemption is requested:

a. Name and Identification Number:

Reactor Coolant System Piping
System 50
Main Loop Welds in Ferritic Steel Piping

b. Function:

Circulate Reactor Coolant from Reactor to Steam Generators and return

c. ASME Section III Code Class:

Class 1

d. Valve Category:

N/A

II. Reference Code Requirement that has been determined to be impractical:

ASME Section XI and Appendix III Paragraph III-3410 "The Basic calibration blocks shall be made from material of the same nominal diameter and nominal wall thickness as the pipe to be examined".

III. Basis for Requesting Relief:

The main reactor coolant loop piping at Oconee consists of two 36" ID, 2.86" nominal wall hot legs, four 28" ID, 2.33" nominal wall crossovers, and four 28" ID, 2.33" nominal wall cold legs. Calibration block 40350 (sketch attached) was used for the first interval inspection of this piping.

III. Basis for Requesting Relief (cont.)

Two new calibration blocks would be required to comply with this requirement. This would require fabrication of two new piping sections, cladding, heat treatment, and machining the final calibration blocks.

Use of the existing block (40350) would assure that the second interval inspections are directly comparable to these done during the first interval.

IV. Alternate Examination:

Calibration block 40350 will be used for all ultrasonic inspection of ferritic steel reactor coolant piping welds from the OD surface. Reference levels for the inspections will be set as shown on Attachment 2.

V. Implementation Schedule:

This will apply for all ultrasonic inspections of ferritic steel reactor coolant system piping during the second ten-year interval for Oconee Units 1, 2, and 3.

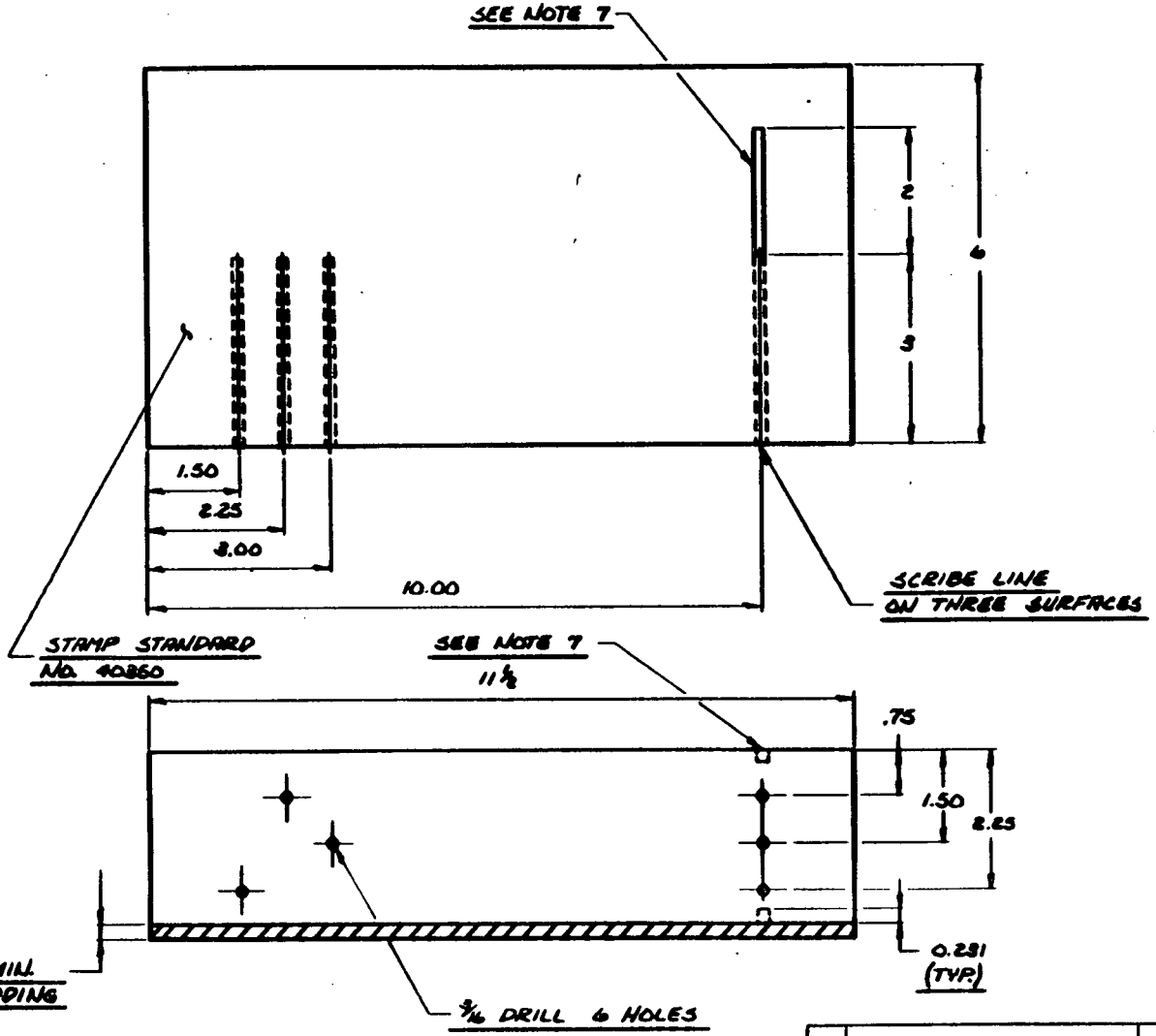

NOTES

1. MATERIAL FOR BLOCK = SA-516 GR. 70 FOR CLAD = 304 S.S.
2. HOLE DIA. = 3/16
3. HOLE DEPTH = 3
4. TOL. FOR TWO DEC. PLACES ± .010
   TOL. FOR FRACTIONAL DIM. ± 1/64
5. HEAT TREAT PER Q.A. SPECS.
6. ALL SURFACES TO BE MACHINED TO 125 R.M.S.
7. 3/16 DIA. END MILL NOTCH DEPTH 0.231 INTO BASE MATERIAL

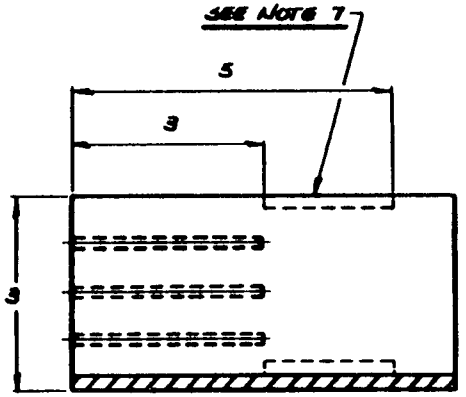

C-10	FABRICATION DRAWING	[illegible]	CBC	9/2/[illegible]				
	REVISIONS	CHKD	APPR	DATE	CIVIL	ELEC.	MECH.	
					INSPECTED			

DUKE POWER COMPANY
OCONEE NUCLEAR STATION UNIT [redacted]

CALIBRATION BLOCK
NO. 40350

DESIGNED [illegible] DATE [illegible] INSP. [illegible] DATE
DRAWN [illegible] DATE [illegible] INSP. [illegible] DATE
CHECKED G.G. BAKER DATE [illegible] APPR. [illegible] DATE [illegible]

DWG. NO. 40350 REV 0

ATTACHMENT 2

ONS-003

Article 5, nonmandatory Appendix A of the 1980 ASME Section V gives criteria for determining the gain adjustment needed when using a flat calibration block for inspection of a convex item with radius of greater than 10 inches. The method involves comparison of the object radius (R) to a calculated critical radius (Rc), which is dependent on transducer diameter, material, and couplant. If the ratio of the R/Rc is greater than 1.0, no gain correction is needed. The following calculations apply to the Oconee RCS piping:

1. Straight Beam Technique

   (A) 28" ID pipe (33.5 OD)
   Transducer - 1/2" diameter, 2.25 mHz
   Boron Carbide wear face
   Synthetic Ester Couplant
   from Table A-10, Transducer Factor = 23.2
   from Figure A-10(a), Rc = 25

   R = 16.75
   R/Rc - 16.75/25 = 0.67
   from Figure A-10 (b), Correction Factor = 3 db

   (B) 36" ID pipe (42.0 OD)
   same transducer and couplant as in 1(A)
   R = 21
   R/Rc = 21/25 = 0.84
   from Figure A-10(b), Correction Factor = 2.5 db

2. Angle Beam Technique

   (A) 28" ID pipe (33.5 OD)
   Transducer - 1.0" diameter, 2.25 mHz
   Plastic wedge
   Synthetic Ester Couplant
   from Table A-10, Transducer Factor = 92.9
   from Figure A-10(a), Rc = 18
   R = 16.75
   R/Rc = 16.75/18 = 0.93
   from Figure A-10(b), correction factor = 2 db

   (B) 36" ID pipe (42.0 OD)
   Same transducer and couplant as in 2(A)
   R = 21
   R/Rc = 21/18 = 1.16
   No correction is required.

Based on the above calculations, the following will apply to all contact ultrasonic inspections of ferritic steel reactor coolant system piping at Oconee during the second interval:

1. Straight beam examinations will be conducted using a 1/2" diameter, 2.25 mHz transducer. The reference level sensitivity will be set at 3 db above the response from the side drilled

2. Angle beam examinations will be conducted using a 1" diameter or smaller transducer. The reference level sensitivity will be set at least 3 db above the response from the notches in the block.

DUKE POWER COMPANY

Request For Relief From
Inservice Inspection Requirement

Station: Oconee

Unit: 1, 2, & 3

Reference Code: ASME Section XI, 1980 through W80 Addenda

I. Component for which exemption is requested:

a. Name and Identification Number:

Piping between 1RC-4 and 1RC-66 (SYS 50, ISO 47, Unit 1)
2RC-4 and 2RC-66 (SYS 50, ISO 44, Unit 2)
3RC-4 and 3RV-67 (SYS 50, ISO 45, Unit 3)

b. Function:

Pressurizer Relief

c. ASME Section III Code Class:

Class 1

d. Valve Category:

EMO & Relief Valve

II. Reference Code Requirement that has been determined to be impractical:

Table IWB-2500-1, Category B-P, Items B15.71

III. Basis for Requesting Relief

Personnel safety requirements call for valve RC-4 to be closed during reactor coolant system pressure tests. This valve would have to be open to produce hydrostatic test conditions at valve RC-66 (or valve RV-67).

DUKE POWER COMPANY

Request For Relief From
Inservice Inspection Requirement

III. Basis for Requesting Relief (cont.)

There is one 3" NPS, 0.438" wall weld, and one 2½" NPS, 0.375" wall weld between these two valves.

IV. Alternate Examination:

Both welds in each unit will receive a liquid penetrant inspection at or near the end of the inspection interval. This inspection will be done in addition to any other ISI inspections performed on the system.

V. Implementation Schedule:

This inspection will be performed on each unit at or near the end of the second ten-year inspection interval.

DUKE POWER COMPANY

Request For Relief From
Inservice Inspection Requirement

Station: Oconee Nuclear Station

Unit: 1,2,3

Requesting Department: Quality Assurance

Reference Code: 1980 ASME Section XI, including addenda through Winter 1980

I. Component for which exemption is requested:

a. Name and Identification Number:

Reactor Pressure Vessel 36" outlet nozzle-to-vessel and outlet nozzle-to-pipe welds.

b. Function:

Welded connection between the reactor pressure vessel and respective reactor coolant piping providing a flow path to the steam generator.

c. ASME Code Class:

ASME Section XI, Class I

II. Reference Code Requirement that has been determined to be impractical:

ASME Section XI, Table IWB-2500-1; Category B-D, items B3.90 and B3.100. NOTE (3); At least 25% but not more than 50% of the nozzles shall be examined by the end of the first inspection period and the remainder by the end of the third inspection period of each inspection interval.

ASME Section XI, IWB-2420(a): The sequence of component examinations established during the first inspection interval shall be repeated during each successive inspection interval to the extent practical.

III. Basis for Requesting Relief:

During the first period of the second ten year inspection interval at Oconee Nuclear Station the reactor vessel 36" outlet nozzle-to-vessel welds, including nozzle-to-pipe welds, were examined using Babcock & Wilcox's Automated Reactor Inspection Tool (ARIS). The two nozzle welds examined met the 25% requirement of Table IWB-2500-1. No recordable indications were detected.

During the third period of the second ten year inspection interval all reactor vessel nozzle-to-vessel and respective nozzle-to-pipe welds will be examined using automated inspection equipment. Included in this examination will be the 36" outlet nozzle-to-vessel and nozzle-to-pipe welds examined during the first period. The re-examination of these 36" outlet nozzles will be performed meeting the requirements of the 1989 ASME Section XI Code. Credit will be applied to the third interval, first period requirement for the 36" outlet nozzle-to-vessel welds. Category B-D, items B3.90 and B3.100. These examinations will not be performed during the first period of the third inspection interval.

Following this inspection sequence will substantially reduce radiation exposure (2 man rem), critical path time (300 man hours), contaminated shipments, and generation of rad-waste, without effecting the safe operation or reliability of the reactor vessel.

IV. Alternate Examination:

Automated re-examination of all the reactor vessel nozzle-to-vessel welds, including respective nozzle-to-pipe welds will be deferred to the last period of the third ten year inspection interval.

V. Implementation Schedule:

Examinations are scheduled to be performed during the third inspection period for each of the Oconee units as follows:

Oconee Unit 1: RFO #13, 1991
Oconee Unit 2: RFO #12, 1992
Oconee Unit 3: RFO #13, 1992

11.0 Class 1 and 2 Repairs and Replacements

As required by ASME Section XI 1980 Edition, a record of the Class 1 and 2 Repairs and Replacements for work performed from June 5, 1990 through September 26, 1991 is provided and is included in this section of the report. The individual work request documents are on file at Oconee Nuclear Station.

REPAIRS/REPLACEMENT LOG

ASME SECTION XI - 1980

OCONEE NUCLEAR STATION

Interval Covered: From: 06-05-90 To: 09-26-91

NOTE: (1) Unit #1 Refueling Outage #13 Start-up Leak Test *Indeterminate from Work Request Review

Prepared By: QA Technical Support Date: 9-26-91

Reviewed By: T.J. Coleman Date: 10-2-91

Transmitted to ISI Supervisor By: T.J. Coleman Date: 10-2-91

TJC/cmb

REPAIRS AND REPLACEMENT LOG
UNIT 1, RFO-13
ASME SECTION XI-1980
OCONEE NUCLEAR STATION

WORK REQUEST	UNIT	ASME	DESCRIPTION
53547K	3		REPLACED MISSING LOCKNUT ON HANGER 3-07A-4-0-2402A-H7
93520C	1	2	PT MACHINED SURFACE (ROD SECTION) OF HINGE PIN WHICH WAS FABRICATED FOR 1CC-76.
54169I	1	2	MT INSPECTION OF WELD REPAIR TO FDW HEADER FLANGE SEATING SURFACE ON #5 NOZZLE.
23896C	1	2	1MSI55 - REPLACED SEATS AND HAD DISC MACHINED.
57995A	1	1	PERFORMED A MT & UT INSPECTION OF "A" OTSG UPPER AND LOWER PRIMARY STUDS.
54158I	1	2	MT & RT INSPECTION OF BASE METAL REPAIR TO # FW NOZZLE HEADER FLANGE ON #1A-OTSG.
50561J	1	2	TACK WELDED 1A LP1 COOLER CHANNEL COVER FACING TO CHANNEL COVER.
51038K	2	2	REPLACE 285-10 WELDS 53B-56-25, 54A-6-25 & 26.
54054K	1	2	REPLACE 1CC-76 WITH DMV-765.
54055K	1	2	REPLACE 1CC-77 WITH DMU-765.
54729I	1	2	REPLACE 1HP283 WITH 2 VALUES ITEM #'S DMU-57 & DMU-761.
54052K	1	2	REPLACED 1CC-20 WITH ITEM NO. DMV-809.
54053K	1	2	REPLACED 1CC-24 WITH ITEM NO. DMV-809.
99537C	1	2	INSTALLED VALVES 1LPSW878 & 1LPSW879.
50393L	1	2	REPLACED 1FDW346 WITH DMU568.
53910K	1	2	REMOVED LINEAR INDICATION FOUND DURING ISI P BY GRINDING & REINSPECTING BY PT & UT FOR MIN. WALL FOUND ACCEPTABLE. INDICATION WAS ADJACENT TO WELD I-53B-3-9E ON "T" FITTING 3/4" FROM WELD.
53519K	1	1	PT INSPECTED INCORE MONITORING SYSTEM PIPING INSIDE INCORE TANK PER B&W SERVICE BULLETIN. FOUND ACCEPTABLE.

REPAIRS AND REPLACEMENT LOG
UNIT 1, RFO-13
ASME SECTION XI-1980
OCONEE NUCLEAR STATION

WORK REQUEST	UNIT	ASME	DESCRIPTION
50088L	1	2	REPLACED 1LPSW-102.
50087L	1	2	REPLACED 1LPSW-104.
50084L	1	2	REPLACED 1 LPSW-234.
50085L	1	2	REPLACED 1LPSW-235.
50298L	1	2	REPLACED LPSW-226.
50178L	1	2	REPLACED LPSW-84.
50295L	1	2	REPLACED LPSW-225.
50297L	1	2	REPLACED 1LPSW-86.
99888C	1	2	REPLACED 1LPSW-18, 1LPSW-21 & 1LPSW-24.
60810D	1	2	REMOVED LINEAR INDICATION THAT WAS FOUND DURING AN ISI INSPECTION OF ITEM C02-021-001A. THE INDICATION WAS 1/2" LONG LOCATED ON TOP OF NOZZLE ON OTSG-1A AT TOE OI WELD.
60809D	1	2	REMOVED LINEAR INDICATION THAT WAS FOUND DURING AN ISI INSPECTION OF ITEM C05-021-103A. THE INDICATION WAS 1" IN LENGTH, LOCATED IN BASE METAL ADJACENT TO WELD.
57613F	1	2	REPLACED DISC 1 FDW-332.
26890C	1	2	REPLACED DISC 1 SSH-18.
50434I	1	2	REPLACED B/B BOLTING 1 LPSW-21.
93520C	1	2	REPLACED HINGE PIN AND KEY 1CC-76.
50448I	1	2	REPLACED B/B BOLTING 1LPSW-19.
57831C	1	1	REPLACED VALVE 1RC-67.
57469D	1	1	REPLACED VALVE 1RC-66.
27769C	1	2	REPLACED B/B BOLTING 1HP-121.
57832C	1	1	REPLACED VALVE 1RC-68.

REPAIRS AND REPLACEMENT LOG
UNIT 1, RFO-13
ASME SECTION XI-1980
OCONEE NUCLEAR STATION

WORK REQUEST	UNIT	ASME	DESCRIPTION
51461J	1	2	REPLACED B/B BOLTING 1LPSW-18.
51462J	1	2	REPLACED B/B BOLTING 1LPSW-24.
054162I	1	1	REPLACED CRDM HOLDOWN BOLTS NOZZLE #58.
27363C	1	2	REPLACED B/B NUTS 1CF-1.
054160I	1	1	REPLACED CRDM HOLDDOWN BOLTS NOZZLE #44.
054161I	1	1	REPLACED CRDM HOLDDOWN BOLTS NOZZLE #53.
054163I	1	1	REPLACED CRDM HOLDDOWN BOLTS NOZZLE #66.
25740C	1	2	REPLACED IN-LINE FLANGE BOLTING 1BS-16.
57996A	1	1	REPLACED UPPER AND LOWER PRIMARY MANWAY BOLTING "B" OTSG.
57995A	1	1	REPLACED BOLTING UPPER AND LOWER PRIMARY MANWAY "A" OTSG.
50561J	1	2	REPLACED BOLTING "A" LPI COOLER FLANGE.
50830I	1	2	REPLACED B/B BOLTING 1MS-155 & BONNETT.
27703C	1	2	REPLACED WEDGE 1LP-20.
054171I	1	2	REPLACED BOLTING MAIN FDW HEADER #20 B OTSG.
054158I	1	2	REPLACED BOLTING AUX FDW HEADER #1 A OTSG.
65132C	1	2	REPLACED B/B BOLTING 1LP-11.
054024	1	2	REPLACED BOLTING LPSW PIPING FLANGES 1 B2 RCP.
31883C	1	2	REPLACED BOLTING 1A RBS PUMP.
31964C	1	2	REPLACED HINGE PIN STUDS/NUTS 1BS-16.
54054K	1	2	REPLACED 1CC-76.
54055K	1	2	REPLACED 1CC-77.
54068I	1	1	PLUGGED TUBE SPARE LETDOWN COOLER S/N 44734.

REPAIRS AND REPLACEMENT LOG
UNIT 1, RFO-13
ASME SECTION XI-1980
OCONEE NUCLEAR STATION

WORK REQUEST	UNIT	ASME	DESCRIPTION
54730I	1	2	REPLACED 1HP-284.
54732I	1	2	REPLACED 1 HP-286.
50541L	1	2	PLUGGED TUBES 1B LPI COOLER.
54729I	1	2	REPLACED 1HP-283.
54053K	1	2	REPLACED 1CC-24.
54052K	1	2	REPLACED 1CC-20.
50393L	1	2	REPLACED 1FDW-346.
99537C	1	B	REPLACED 1 LPSW-878 AND 879 AND IN-LINE FLANGE BOLTING.
50085L	1	B	REPLACED 1 LPSW 235.
50087L	1	B	REPLACED 1 LPSW 104.
50088L	1	B	REPLACED 1LPSW 102.
50084L	1	B	REPLACED 1LPSW 234.
50295L	1	B	REPLACED 1LPSW 225.
50297L	1	B	REPLACED 1LPSW 86.
50298L	1	B	REPLACED 1LPSW 226.
50178L	1	B	REPLACED 1LPSW 84.
53904K	1	B	MODIFIED WAFERS 1-PR-5, 1-PR-6.
93529C	1	B	REPLACED DISC 1HP-144.
53984K	1	B	REPLACED PIPING LPSW 1A1 AIR COOLER.
99888C	1	B	REPLACED 1-LPSW-18, 21, AND 24.
50498L	1	A	STABILIZER PLUG TUBES 1A OTSG.
57631B	1		REPAIRED SNUBBER ON HANGER 1-50-0-479A-H1A.
52216J	1		REPAIRED HANGER 1-01A-401A-EMO-H22.

REPAIRS AND REPLACEMENT LOG
UNIT 1, RFO-13
ASME SECTION XI-1980
OCONEE NUCLEAR STATION

WORK REQUEST	UNIT	ASME	DESCRIPTION
54664I	1		REPAIRED SNUBBER ON HANGER 1-57-0-481A-H14.
54667I	1		REPAIRED SNUBBER ON HANGER 1-50-0-66A-RCPM-87.
54007I	1		REWELDED HANGER INTO POSITION 1-55-0-479F-RJP-H0901.
98158C	1		INSTALLED HANGER 1-63-435K-H5621.
052207J	1		REPLACED SNUBBER ON HANGER 1-01A-0-441-DE002.
054663I	1		INSTALLED SHIM ON HANGER 1-51A-0-439A-H95.
054666I	1		REPAIRED SNUBBER ON HANGER 1-03-0-480B-H10A.
054672I	1		REPAIRED SNUBBER ON HANGER 1-01A-3-0-401A-R6
52214J	1		REPLACED HANGER 1/2" ROD & MISSING NUTS, HANGER 1-51A-0-479A-H10A.
54671I	1		REPLACED MISSING NUTS, HANGER 1-01A-1-2-0-401A-H49.
52217J	1		REPAIRED SNUBBER ON HANGER 1-57-0-481A-H10.
52211J	1		MACHINED SPACER FOR PROPER CLEARANCE, HANGER 1-03-0-551-DE003.
57980C	1		REPLACED SNUBBER ON HANGER 1-54A-0-439C-DE022.
57980C	1		REPLACED PARTS ON SNUBBER ON HANGER 1-03A-439B-H5179.
57980C	1		REPLACED PARTS ON SNUBBER ON HANGER 1-01A-0-550-R4.
57980C	1		REPAIRED PARTS ON SNUBBER ON HANGER 1-03A-1-0-400B-H123.
57980C	1		REPLACED SNUBBER ON HANGER 1-01A-0-550-DE006(A).
57980C	1		REPLACED SNUBBER ON HANGER 1-51-478E-H6160.
98741C	1		MODIFIED HANGER 1-03A-1-0-400B-H165.

REPAIRS AND REPLACEMENT LOG
UNIT 1, RFO-13
ASME SECTION XI-1980
OCONEE NUCLEAR STATION

WORK REQUEST	UNIT	ASME	DESCRIPTION
52220J	1		REPAIRED SNUBBER ON HANGER 1-01A-4-I-0-403C-R6.
95120B	1		INSTALLED HANGER 1-53B-5-0-439B-R29.
95120B	1		RELOCATED HANGER 1-53B-5-0-435B-H4.
95120B	1		INSTALLED HANGER 1-53B-5-0-436D-R33.
95121B	1		INSTALLED HANGER 1-51-436E-H5608.
95121B	1		MODIFIED HANGER 1-51B-2-0-436G-SR64.
95121B	1		INSTALLED HANGER 1-51A-438B-DE002.
95121B	1		INSTALLED HANGER 1-51-0-438A-SR25.
95121B	1		INSTALLED HANGER 1-51B-436H-DE070.
95121B	1		INSTALLED HANGER 1-51A-0-439C-H91.
95109B	1		INSTALLED HANGER 1-14B-437A-DE043.
95109B	1		MODIFIED HANGER 1-14B-439B-SR56.
95109B	1		INSTALLED HANGER 1-14B-437B-H5584.
95109B	1		INSTALLED HANGER 1-14B-437A-DE056.
95109B	1		INSTALLED HANGER 1-14B-0-400G-DE137.
95109B	1		MODIFIED HANGER 1-14B-0-437A-SR-51.
98654C	1		MODIFIED HANGER 1-14B-437B-DE020.
98654C	1		MODIFIED HANGER 1-14B-438C-H5236.
98654C	1		REPLACED SWAY STRUT ON HANGER 1-14B-438C-H5237.
98654C	1		MODIFIED HANGER 1-14B-439G-H5234.
50546L	1		MODIFIED HANGER 1-02A-1-0-403A-H12.
99505C	1		MODIFIED HANGER 1-01A-0-401A-RLC-1579.
99935C	1		MODIFIED HANGER 1-14B-0-480C-H4B.

REPAIRS AND REPLACEMENT LOG
UNIT 1, RFO-13
ASME SECTION XI-1980
OCONEE NUCLEAR STATION

WORK REQUEST	UNIT	ASME	DESCRIPTION
99935C	1		MODIFIED HANGER 1-57-0-480A-H19.
99935C	1		MODIFIED HANGER 1-50-0-66A-RCPM-52.
99935C	1		MODIFIED HANGER 1-50-0-66A-RCPM-51.
99935C	1		MODIFIED HANGER 1-50-0-66A-RCPM-53.
99935C	1		MODIFIED HANGER 1-55-0-479E-RTB-H0401.
99935C	1		MODIFIED HANGER 1-14B-0-480C-H28A.
99935C	1		MODIFIED HANGER 1-17-0MB14.15-H6280.
99935C	1		MODIFIED HANGER 1-14B-0-480C-H5A.
99935C	1		INSTALLED NEW HANGER 1-55-479E-H6463.
99935C	1		INSTALLED NEW HANGER 1-55-479E-H6462.
99925C	1		INSTALLED NEW HANGER 1-07A-400A-H4175.
99925C	1		REMOVED HANGER 1-07A-6-0-400A-H30.
99925C	1		REMOVED HANGER 1-07A-6-0-400A-H31.
99925C	1		REMOVED HANGER 1-07A-6-0-400A-H32.
99925C	1		REMOVED HANGER 1-07A-6-0-400A-H33.
99925C	1		MODIFIED HANGER 1-07A-6-0-400A-H34.
99925C	1		MODIFIED HANGER 1-07A-6-0-400A-H36.
99925C	1		REPLACED SPRING CAN ON HANGER 1-07A-6-0-400A-H43.
99925C	1		MODIFIED HANGER 1-07A-6-0-400A-H45.
99925C	1		INSTALLED NEW HANGER 1-07A-400A-H4172.
99925C	1		INSTALLED NEW HANGER 1-07A-400A-H4173.
99925C	1		INSTALLED NEW HANGER 1-07A-400A-H4174.
99925C	1		ADJUSTED SPRING CAN TO NEW SETTINGS ON HANGE 1-07A-0400B-H14.

REPAIRS AND REPLACEMENT LOG
UNIT 1, RFO-13
ASME SECTION XI-1980
OCONEE NUCLEAR STATION

WORK REQUEST	UNIT	ASME	DESCRIPTION
51384K	1		MODIFIED HANGER 1-01A-441-H4130.
53359I	1		INSTALLED NEW U-BOLT ON HANGER 1-14B-0-480C-H2A.
53359I	1		INSTALLED NEW U-BOLT ON HANGER 1-14B-0-480C-H3B.
53359I	1		INSTALLED NEW U-BOLT ON HANGER 1-14B-0-480C-H2B.
53359I	1		INSTALLED NEW U-BOLT ON HANGER 1-14B-0-480C-H3A.
53359I	1		INSTALLED NEW U-BOLT ON HANGER 1-14B-0-480C-H4A.
53359I	1		INSTALLED NEW U-BOLT ON HANGER 1-14B-0-480C-H5B.
53359I	1		INSTALLED NEW U-BOLT ON HANGER 1-14B-0-480C-H1A.
53359I	1		INSTALLED NEW U-BOLT ON HANGER 1-14B-0-480C-H1B.
99982C	1		MODIFIED HANGER 1-51A-0-479A-H16B.
99985C	1		MODIFIED HANGER 1-01A-0-550-H14.
53984K	1		REPLACED U-BOLTS (NEW) ON HANGER 1-14B-0-480C-H29B.
53984K	1		REPLACED U-BOLTS (NEW) ON HANGER 1-14B-0-480C-H28B.
53984K	1		REPLACED U-BOLTS (NEW) ON HANGER 1-14B-0-480C-H29A.
53984K	1		REPLACED U-BOLTS (NEW) ON HANGER 1-14B-0-480C-H30B.
99888C	1		REPLACED U-BOLTS (NEW) ON HANGER 1-14B-0-439B-H21.
50506C	1		SNUBBER REBUILT/REPLACED ON HANGER 1-50-0-480A-H9.

REPAIRS AND REPLACEMENT LOG
UNIT 1, RFO-13
ASME SECTION XI-1980
OCONEE NUCLEAR STATION

WORK REQUEST	UNIT	ASME	DESCRIPTION
99984C	1		CORRECTED ISI DEFICIENCY 1-51A-0-479A-H12B.
51377K	1		REPLACED U-BOLT (NEW) ON HANGER 1-64-439C-H5590.
50499L	1	A	STABILIZE, PLUG TUBES 1BOTSG.

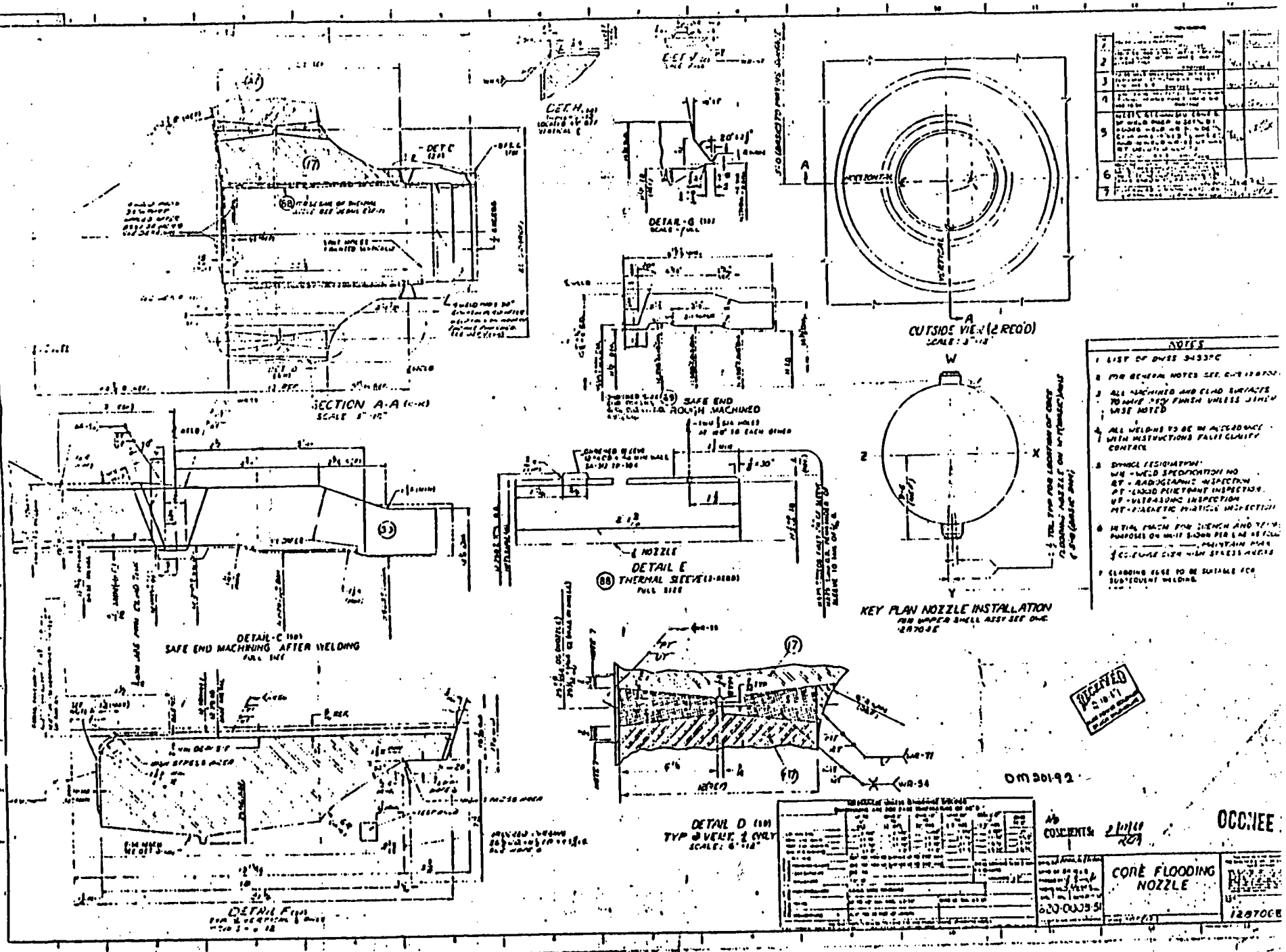
SECTION A-A
DETAIL-G
SAFE END ROUGH MACHINED
OUTSIDE VIEW (2 REQ'D)
DETAIL-C
SAFE END MACHINING AFTER WELDING
DETAIL E
THERMAL SLEEVE
KEY PLAN NOZZLE INSTALLATION
DETAIL D
TYP @ VERT. ℄ ONLY
DETAIL F
NOTES
1 LIST OF DWGS 94337C
2 FOR GENERAL NOTES SEE DWG 128702
3 ALL MACHINED AND CLAD SURFACES TO HAVE 250 FINISH UNLESS OTHERWISE NOTED
4 ALL WELDING TO BE IN ACCORDANCE WITH INSTRUCTIONS FALLS QUALITY CONTROL
5 SYMBOL DESIGNATION:
WR - WELD SPECIFICATION NO
RT - RADIOGRAPHIC INSPECTION
PT - LIQUID PENETRANT INSPECTION
UT - ULTRASONIC INSPECTION
MT - MAGNETIC PARTICLE INSPECTION
6 INITIAL MACH FOR SHENCH AND TEMP PURPOSES ON UNIT SHOWN PER LINE AS FOLLOWS
7 CLADDING EDGE TO BE SUITABLE FOR SUBSEQUENT WELDING
RECEIVED
DM 20192
OCONEE
CORE FLOODING NOZZLE
620-0005-51
128700E
UNCONTROLLED