October 21, 1998

Mr. W. R. McCollum
Vice President, Oconee Site
Duke Energy Corporation
P. O. Box 1439
Seneca, SC 29679

SUBJECT: REVIEW OF PRELIMINARY ACCIDENT SEQUENCE PRECURSOR ANALYSIS OF EVENT AT OCONEE NUCLEAR PLANT, UNIT 2

Dear Mr. McCollum:

Enclosed for your information is a copy of the final Accident Sequence Precursor analysis of the operational event at the Oconee Nuclear Plant, Unit 2, reported in Licensee Event Report No. 270/97-001. This final analysis (Enclosure 1) was prepared by our contractor at the Oak Ridge National Laboratory, based on review and evaluation of your comments and comments received from the NRC staff on the preliminary analysis. Enclosure 2 contains our responses to your specific comments. Our review of your comments employed the criteria contained in the material that accompanied the preliminary analysis. The results of the final analysis indicate that this event is a precursor for 1997.

If you have any questions regarding the enclosures, please write or call me at (301) 415-1472. We recognize and appreciate the effort expended by you and your staff in reviewing and providing comments on the preliminary analysis.

Sincerely,
ORIGINAL SIGNED BY:
David E. LaBarge, Senior Project Manager
Project Directorate II-2
Division of Reactor Projects - I/II
Office of Nuclear Reactor Regulation

Docket No. 50-270

Enclosures: As stated (2)

cc w/encls: See next page

Distribution:

Docket File	LBerry
PUBLIC	DLaBarge
PD II-2 Rdg.	OGC
B. Boger	LPlisco, RII
J. Zwolinski	COgle, RII
H. Berkow	ACRS
P. O'Reilly, AEOD	

DF01 1/1

To receive a copy of this document, indicate in the box: "C" = Copy without attachment/enclosure "E" = Copy with attachment/enclosure "N" = No copy

OFFICE	PM:PDII-2	LA:PDII-2	D:PDII-2			
NAME	DLaBarge:cn	LBerry	HBerkow			
DATE	10/21/98	10/21/98	10/21/98	/ /98	/ /98	/ /97

DOCUMENT NAME: G:\OCONEE\OCONEE2.LTR OFFICIAL RECORD COPY

UNITED STATES
NUCLEAR REGULATORY COMMISSION
WASHINGTON, D.C. 20555-0001

October 21, 1998

Mr. W. R. McCollum
Vice President, Oconee Site
Duke Energy Corporation
P. O. Box 1439
Seneca, SC 29679

SUBJECT: REVIEW OF PRELIMINARY ACCIDENT SEQUENCE PRECURSOR ANALYSIS OF EVENT AT OCONEE NUCLEAR PLANT, UNIT 2

Dear Mr. McCollum:

Enclosed for your information is a copy of the final Accident Sequence Precursor analysis of the operational event at the Oconee Nuclear Plant, Unit 2, reported in Licensee Event Report No. 270/97-001. This final analysis (Enclosure 1) was prepared by our contractor at the Oak Ridge National Laboratory, based on review and evaluation of your comments and comments received from the NRC staff on the preliminary analysis. Enclosure 2 contains our responses to your specific comments. Our review of your comments employed the criteria contained in the material that accompanied the preliminary analysis. The results of the final analysis indicate that this event is a precursor for 1997.

If you have any questions regarding the enclosures, please write or call me at (301) 415-1472. We recognize and appreciate the effort expended by you and your staff in reviewing and providing comments on the preliminary analysis.

Sincerely,

David E. LaBarge, Senior Project Manager
Project Directorate II-2
Division of Reactor Projects - I/II
Office of Nuclear Reactor Regulation

Docket No. 50-270

Enclosures: As stated (2)

cc w/encls: See next page

cc:

Mr. Paul R. Newton
Legal Department (PBO5E)
Duke Energy Corporation
422 South Church Street
Charlotte, North Carolina 28201-1006

J. Michael McGarry, III, Esquire
Winston and Strawn
1400 L Street, NW.
Washington, DC 20005

Mr. Rick N. Edwards
Framatome Technologies
Suite 525
1700 Rockville Pike
Rockville, Maryland 20852-1631

Manager, LIS
NUS Corporation
2650 McCormick Drive, 3rd Floor
Clearwater, Florida 34619-1035

Senior Resident Inspector
U. S. Nuclear Regulatory Commission
7812B Rochester Highway
Seneca, South Carolina 29672

Regional Administrator, Region II
U. S. Nuclear Regulatory Commission
Atlanta Federal Center
61 Forsyth Street, S.W., Suite 23T85
Atlanta, Georgia 30303

Virgil R. Autry, Director
Division of Radioactive Waste Management
Bureau of Land and Waste Management
Department of Health and Environmental Control
2600 Bull Street
Columbia, South Carolina 29201-1708

County Supervisor of Oconee County
Walhalla, South Carolina 29621

Mr. J. E. Burchfield
Compliance Manager
Duke Energy Corporation
Oconee Nuclear Site
P. O. Box 1439
Seneca, South Carolina 29679

Ms. Karen E. Long
Assistant Attorney General
North Carolina Department of Justice
P. O. Box 629
Raleigh, North Carolina 27602

L. A. Keller
Manager - Nuclear Regulatory Licensing
Duke Energy Corporation
526 South Church Street
Charlotte, North Carolina 28201-1006

Mr. Richard M. Fry, Director
Division of Radiation Protection
North Carolina Department of Environment, Health, and Natural Resources
3825 Barrett Drive
Raleigh, North Carolina 27609-7721

Mr. Steven P. Shaver
Senior Sales Engineer
Westinghouse Electric Company
5929 Carnegie Blvd.
Suite 500
Charlotte, North Carolina 28209

LER No. 270/97-001

Event Description: Unisolable reactor coolant system leak

Date of Event: April 21, 1997

Plant: Oconee 2

Event Summary

An unisolable 12-gal/min leak developed in the reactor coolant system (RCS) high-pressure injection (HPI) nozzle safe end-to-piping weld downstream of reactor coolant pump (RCP) 2A1 (Ref. 1). Unit 2 was shut down, and personnel removed and inspected the leaking pipe section. The leak was caused by a circumferential crack, with through-wall penetration along 77° of the outer pipe surface. In addition, the nozzle thermal sleeve was loose and cracked, with portions missing from the end that extends into the RCS flow path. The piping failures were caused by high-cycle thermal fatigue that was caused by the mixing of makeup, warming, and RCS flows. The estimated conditional core damage probability (CCDP) associated with this event is 2.2×10^{-5}.

Event Description

At approximately 2245 on April 21, 1997, with Unit 2 at 100% power, changes were noted in the rate at which the water level in the letdown storage tank (LDST) was decreasing while the Reactor Building (RB) sump level was increasing. RB radiation monitor alarms followed. At 2300 the RCS leak rate was estimated to be 2.36 gal/min. Personnel entered the RB at 0215, determined that a leak did exist, but could not identify the source.

The shutdown of Unit 2 began at 0352, with the intention to reduce power to 15%. Because reducing the power level reduces the radiation levels in the RB, personnel could then perform a more detailed inspection of the leak area with the main turbine remaining on-line. At 0900, a more accurate leak rate calculation was performed with power stabilized at 20%. This calculation indicated that the leak rate had increased from 2.36 gal/min at 2300 to 6.25 gal/min at 0940. By 1048 it had increased above 8 gal/min.

At 1217, during another RB entry, the leak location was identified as being in the vicinity of 2HP-127, the block valve closest to the HPI injection nozzle on the 2A1 RCP cold leg (Fig. 1). The decision was made to proceed to cold shutdown. The turbine generator was taken off-line at 1250, and the reactor was tripped at 1448 on April 22, 1997. The leak rate peaked at approximately 12 gal/min at 1750 and then began to decrease as RCS pressure was reduced as the shutdown continued.

The leak was found to be in an unisolable section of piping at the weld between the HPI piping and injection nozzle safe end. The unit was placed in a reduced inventory condition, and the pipe from the safe end to the block valve was cut out for examination (a temporary cap was then welded to the safe end, and the RCS water level was raised). This examination determined that the leaking weld was caused by a 360° inside circumferential crack that penetrated, at a minimum, 24% of the pipe wall. The flaw depth increased and became through-wall over 77° of the outer circumference, as shown in Fig. 2. The nozzle thermal sleeve was also found to be loose and cracked, with portions missing from the end that extends into the RCS flow. Cracking (~20% through-wall) was also found in the pipe in the vicinity of the warming line nozzle. Video examination, ultrasonic testing (UT), and radiographic testing (RT) of the welds and thermal sleeves in the other HPI nozzles showed no indications of cracking, loosening, or other signs of degradation.

The licensee concluded that the piping failures were caused by high-cycle thermal fatigue resulting from thermal mixing of the warming line, makeup flow, and RCS flow. Thermal mixing occurred in the thermal sleeve, safe end, and piping because of varying operational conditions, including low makeup flow through the thermal sleeve. This caused cracking in the pipe, pipe-to-safe end weld, and safe end and contributed to the thermal sleeve failure. Vibration may have also contributed to the final failure once the crack was essentially through the pipe wall.

Following several earlier industry events involving cracked thermal sleeves and nozzle safe ends (described in the following section), Oconee adopted an augmented inspection plan to periodically check piping near the pipe-to-safe end welds (on Units 2 and 3) and the thermal sleeves (on all units). A review of the inspection schedules indicated that these inspections had been performed on Unit 2 in May 1996. However, the licensee determined that the inspection program failed to include UT of the piping near the pipe-to-safe end weld. Because of this, the weld that was cracked and leaking had not been inspected since 1982. The criteria for reviewing safe end radiographs were also poorly defined.

A reassessment of all radiographs of the thermal sleeves performed since 1983 determined that there had been no RT on the thermal sleeves at Unit 1 since 1989. However, a review of radiographs taken between 1983 and 1989 indicated no degradation of any of the thermal sleeves at Unit 1. Unit 1 was shut down on June 14, 1997, and its HPI nozzles and thermal sleeves were examined. The Oconee 1 thermal sleeves are of a different design, utilizing two concentric sleeves instead of the single sleeves used in the nozzles at Units 2 and 3. No unacceptable indications were found in the Unit 1 nozzles and sleeves.

Because the reassessment of Unit 3 radiographs indicated that the 3A1 thermal sleeve was potentially degraded, Unit 3 was shut down for inspection on May 1, 1997. Cladding cracks were found in the 3A1 thermal sleeve. UT of the other Unit 3 nozzles found no rejectable indications. Both the 2A1 and 3A1 nozzles were restored by installation of new safe ends, thermal sleeves, and associated piping.

Additional Event-Related Information

At Oconee, the HPI system provides both normal RCS makeup and RCP seal injection, as well as HPI for small-break loss-of-coolant accident (LOCA) mitigation. During normal operation, the HPI system A header supplies makeup (typically 15–20 gal/min) from the LDST through each of two lines to the RCS. These lines are equipped with "warming" lines that provide a minimum flow of 3 gal/min. The B HPI header is for emergency injection only and has no warming lines.

The HPI injection lines terminate at injection nozzle assemblies located on each of the cold legs downstream of the RCPs. Each nozzle assembly (Fig. 3) consists of an Inconel-clad carbon steel nozzle to which a stainless steel safe end is welded. The HPI piping is welded to the other end of the safe end. Inside the safe end is a stainless steel thermal sleeve, which extends into the RCS flow path. The function of the thermal sleeve is to minimize thermal shock and stresses on the nozzle by transporting the relatively cold HPI water (~100 to 120°F) into the main flow path. There it mixes with the 555°F RCS cold leg water. Without the thermal sleeve, the HPI water would directly contact the nozzle, resulting in unacceptable stresses in the nozzle material.

Additional information concerning this event is provided in NRC Information Notice 97-46 (Ref. 2). Problems similar to this event occurred in 1982 at Crystal River 3 and Oconee, and in 1988 at Farley and Davis Besse. These events are described in NRC Information Notice 82-09 (Ref. 3), Generic Letter 85-20 (Ref. 4), and NRC Bulletin 88-08 (Ref. 5). Generic Letter 85-20 adopted recommended corrective actions developed by the Babcock and Wilcox (B&W) Owner's Group following the 1982 problems at Crystal River 3 and Oconee.

Modeling Assumptions

This event was modeled as a potential small-break LOCA at the 2A1 cold leg HPI nozzle. In the actual event the pipe crack developed slowly and began to leak. This leakage was detected, and the plant was shut down while the injection line remained substantially intact. It is possible, however, that the crack could have developed differently, resulting in catastrophic failure of the injection line before detection.

The probability of such a "rupture before leak", which would result in a LOCA, was developed using a service-based piping reliability data developed by the Swedish Nuclear Power Inspectorate (SKI).[6] The probability of pipe rupture represents the likelihood that a defect could have progressed to a rupture. The conditional probability of an HPI line rupture was estimated using data related to thermal-fatigue-induced piping failures included in the recently developed SKI piping failure database.[6,7] The SKI database currently includes over 2300 pipe failure records that represent about 4300 reactor-years of operating experience. For failures due to thermal fatigue, 20 cracks and leaks, but no ruptures, were observed in stainless steel piping 1 to 4 in. in

diameter. Using Bayesian statistics with a noninformative prior[a], a conditional probability of rupture of 2.4 $\times 10^{-2}$ was estimated.[b] Because no ruptures have been observed, this estimate may be conservative. However, several thermal fatigue-induced failures also included cyclic fatigue (vibration-induced fatigue) as a contributing factor (as noted in the **Event Description**, this may have been the case in this event as well). Among the 78 failures, two cyclic fatigue-related ruptures have been observed. This results in an estimated conditional probability of 3.2×10^{-2}, approximately the same as the 2.4×10^{-2} estimate for thermally induced fatigue. These values are consistent with the average number of piping failures that are ruptures estimated in 1981 by Thomas (Ref. 8)[a] and is about a factor of 4 smaller than the leak-before-break probability developed by the Electric Power Research Institute (EPRI) in 1992 (Ref. 9).[b]

The strength of the HPI line piping and the proximity of the 1-in warming line to the leaking weld would be expected to limit pipe movement and hence flow area, if a rupture had occurred (flow would also be limited by the thermal sleeve). This was reflected in the analysis by assuming that the potential break would be a small-break LOCA instead of the medium-break LOCA normally associated with a 2.5- in. break at Oconee.

Flow lost from an HPI line break is unavailable for RCS makeup. Orifices in each injection line provide for flow indication to allow the operators to redirect HPI flow between the two sets of injection lines so that a majority of the flow goes through the intact header into the RCS. The HPI system design also includes cross-connects to allow flow from the center HPI pump to be directed to the intact injection lines if the pump that normally supplies these lines (pump A in the case of a break in the 2A1 injection line) is unavailable. To address a potential HPI line break, the HPI and piggy-back cooling (high-pressure recirculation) fault trees were revised to require flow through the intact header in the event of such a break (a break in header A was modeled). In addition, the potential for the operators to realign pump B to inject through the B header was also added to the model.

---

[a]The use of a noninformative prior is described on page 5-36 of the *PRA Procedures Guide*, NUREG/CR-2300, January 1983. A number of alternate estimators have been proposed for the case where no failures have been observed. See, for example, Section 5.5 of NUREG/CR-2300 and R. T. Bailey's article "Estimation from Zero-Failure Data" in *Risk Analysis*, Vol. 17, No. 3, June 1997.

[b]An alternative to the "data-driven" model that constitutes the SKI effort is the application of probabilistic fracture mechanics models. These models enable the calculation of failure probabilities assuming that piping is susceptible to anticipated degradation mechanisms especially those that develop over a long period. Ref. 6 notes that under a similar set of boundary conditions, the two approaches tend to produce similar (i.e., the same order of magnitude) results.

[a]Reference 8 estimated that between 2 and 45% of piping failures were catastrophic, depending on the failure cause. On average, approximately 6% of all failures were estimated to be catastrophic. Unfortunately, piping failures caused by high-cycle fatigue were not separately enumerated. Three percent of low-cycle fatigue failures were estimated to be catastrophic, compared to 20% of vibration-related fatigue failures and 20% of failures associated with "thermal shock."

[b]Reference 9 estimated that the probability of break before leak varied from 0.09 to 0.11, depending on pipe size.

The model was also revised to address use of rapid RCS depressurization and low-pressure injection (LPI) in the event that HPI were to fail. The Oconee Individual Plant Examination (IPE)[10] states that the emergency operating procedures direct the operators to use secondary heat removal to depressurize the RCS until LPI flow is greater than 100 gal/min per header. The probability of the operators failing to depressurize the RCS and initiating LPI was assumed to be 0.1, consistent with Ref. 10.

Analysis Results

The CCDP for a postulated small-break LOCA associated with the leaking 2A1 HPI nozzle weld is estimated to be 2.2×10^{-5}. The dominant sequence, sequence 3 in Fig. 4, involves

- a postulated HPI line break (small-break LOCA) given the weld leak,
- successful reactor trip and secondary side cooling,
- successful RCS depressurization to the decay heat removal (DHR) initiation pressure, and
- failure of DHR and piggy-back cooling.

The dominant cut sets involve common-cause failures of the DHR heat exchangers and pumps.

Substantial uncertainty is associated with the CCDP estimated for this event, primarily because of uncertainty in the conditional probability of pipe rupture. In addition to the uncertainty related to zero-event data described in **Modeling Assumptions**, Ref. 6 describes, among others, the following sources of uncertainty: coverage and completeness of the SKI data collection effort, data aggregation and exposure time estimation issues, identification of appropriate reliability attributes (e.g., pipe diameter, piping material) and influence factors (such as design and operating practices), plant-to-plant differences, and in-plant differences. In one probabilistic fracture mechanics study[a] cited in Ref. 6, a three orders of magnitude difference existed in the conditional rupture probability for leaking 100–800 mm pipe ($10^{-4} \leq p \leq 10^{-1}$), depending on (1) the material, (2) whether the crack was in the base metal, or (3) if the crack was in a weld (as it was for this event). For stainless steel, the conditional probability for weld cracks was about two orders of magnitude higher than for cracks in base metal.

Definitions and probabilities for selected basic events are shown in Table 1. The conditional probabilities associated with the highest probability sequences are shown in Table 2. Table 3 lists the sequence logic associated with the sequences listed in Table 2. Table 4 describes the system names associated with the dominant sequences. Minimal cut sets associated with the dominant sequences are shown in Table 5.

During the Unit 3 shutdown to inspect its HPI nozzles and thermal sleeves, two of its three HPI pumps were damaged when they were operated with inadequate net positive suction head (NPSH). This resulted from a drained reference leg in the LDST instrumentation. The impact of the HPI pump failures as well as the potential for a combined RCS leak and HPI pump failure are addressed in the analysis of LER 287/97-003.

---

[a] *Probabilistic Pipe Fracture Evaluations for Leak-Rate Detection Applications*, NUREG/CR-6004, 1995.

Acronyms

BWST	borated water storage tank
B&W	Babcock and Wilcox
CCDP	conditional core damage probability
CCF	common-cause failure
CS	carbon steel
DHR	decay heat removal
EPRI	Electric Power Research Institute
HPI	high pressure injection
IPE	individual plant examination
LDST	letdown storage tank
LOCA	loss-of-coolant accident
LPI	low pressure injection
MOV	motor-operated valve
MU	makeup
NPSH	net positive suction head
OD	outside diameter
RB	reactor building
RCS	reactor coolant system
RCP	reactor coolant pump
RT	radiographic testing
SKI	Swedish Nuclear Power Inspectorate
SS	stainless steel
SW	socket weld
TW	through-wall
UT	ultrasonic testing

References

1. Licensee Event Report 270/97-001, "Unisolable Reactor Coolant Leak due to Inadequate Surveillance Program," May 21, 1997.

2. NRC Information Notice 97-46, "Unisolable Crack in High-Pressure Injection Piping," July 9, 1997.

3. NRC Information Notice 82-09, "Cracking in Piping to Makeup Coolant Lines at B&W Plants," March 31, 1982.

4. NRC Generic Letter 85-20, "Resolution of Generic Issue 69: High Pressure Injection/Makeup Nozzle Cracking in Babcock and Wilcox Plants," November 11, 1985.

5. NRC Bulletin 88-08, "Thermal Stresses in Piping Connected to Reactor Coolant Systems," June 22, 1988 (and supplements 1–3 dated June 24, 1988, August 4, 1988, and April 11, 1989, respectively).

6. R. Nyman, D. Hegedus, B. Tomic, and B. Lydell, *Reliability of Piping System Components, Framework for Estimating Failure Parameters from Service Data*, SKI Report 97:26, December 1997.

7. Personal communication, B. Lydell (RSA Technologies) and J. Minarick (SAIC), September 25, 1997.

8. H. M. Thomas, "Pipe and Vessel Failure Probability," *Reliability Engineering*, 2:83 (1981).

9. *Pipe Failures in U.S. Commercial Nuclear Power Plants*, EPRI TR-100380, July 1992.

10. Duke Power Company, *Oconee Nuclear Station IPE Submittal Report*, December 1990, p. 5.7-22, Rev 1.

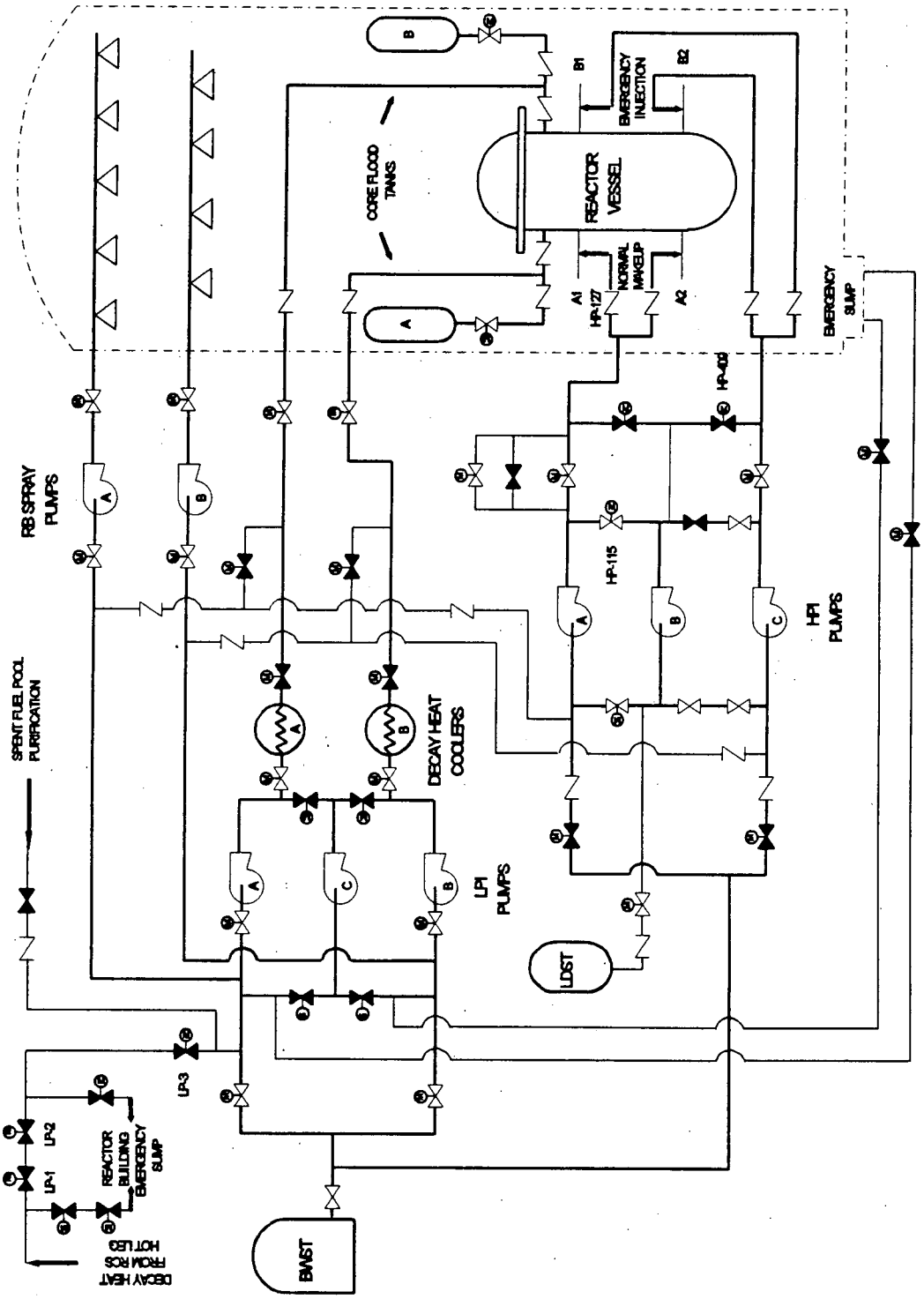

Fig. 1. Flow diagram of the emergency core cooling system at Oconee 2 (source: Oconee 2 *Final Safety Analysis Report).*

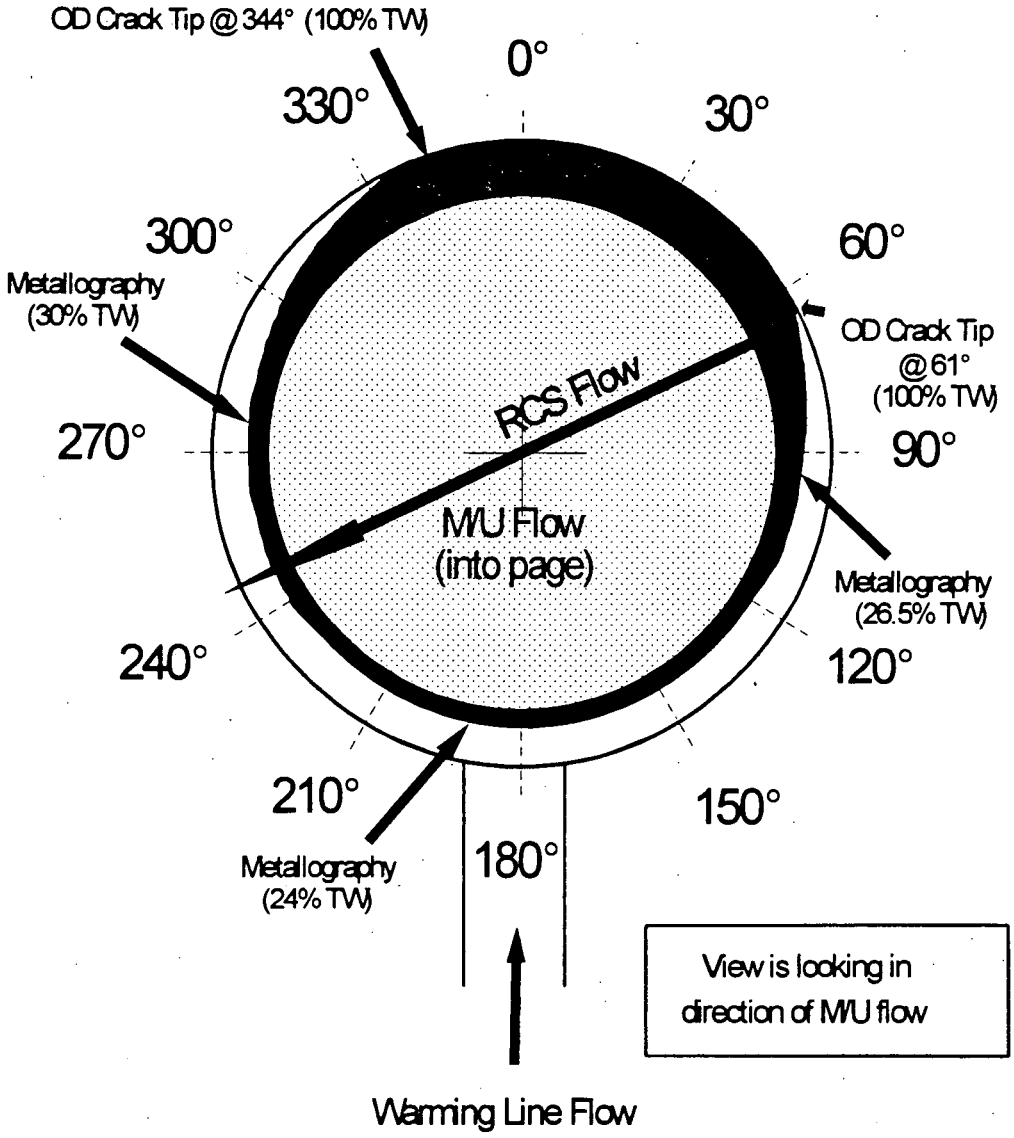

Fig. 2. Through-wall flaw depth in pipe at Oconee 2 (source: NRC Information Notice 97-46, "Unisolable Crack in High-Pressure Injection Piping," July 9, 1997). (TW is through-wall, OD is outside diameter, M/U flow is makeup flow, and RCS is reactor coolant system.)

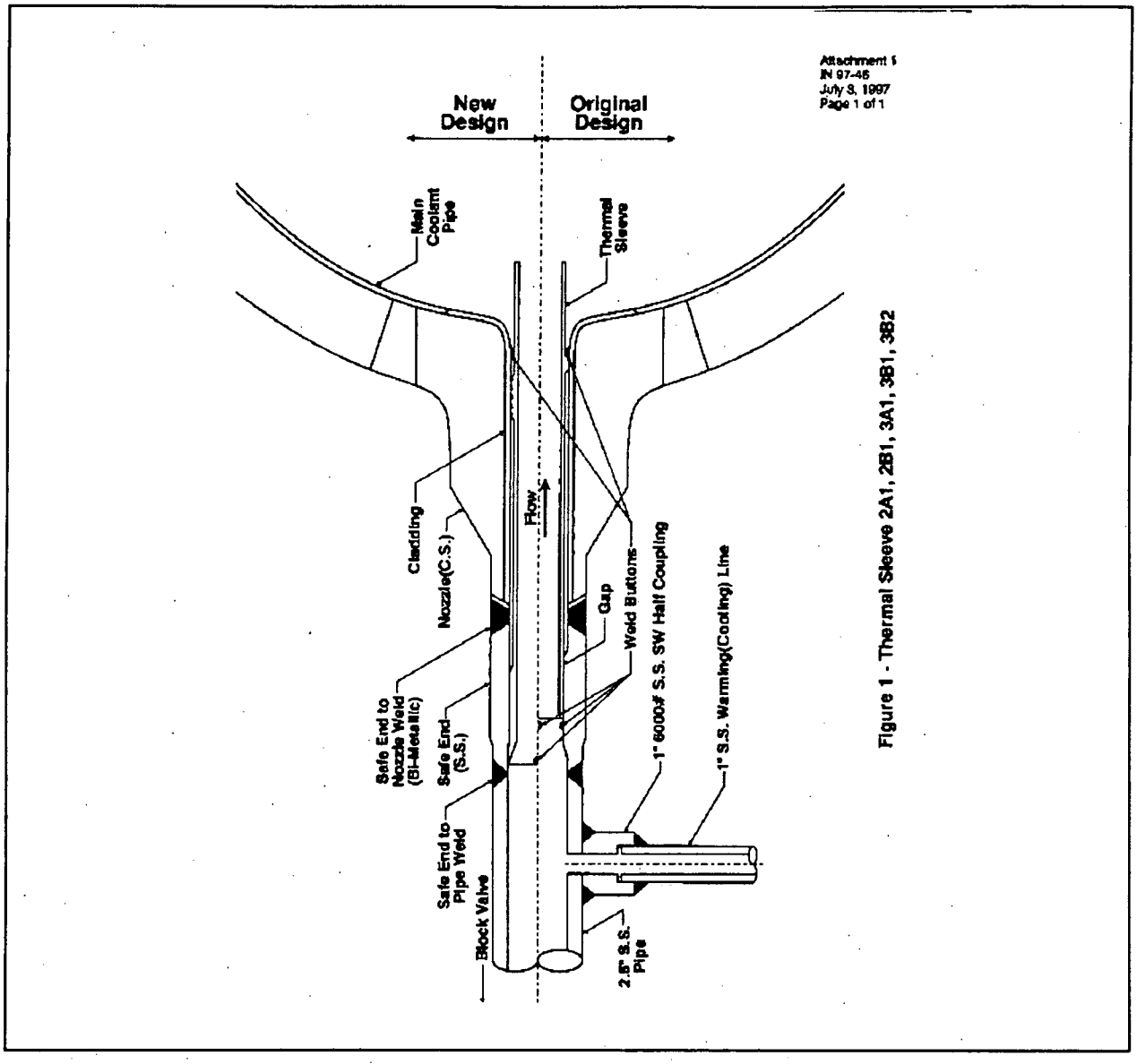

Fig. 3. Thermal sleeve 2A1, 2B1, 3A1, 3B1, and 3B2 (source: NRC Information Notice 97-46, "Unisolable Crack in High-Pressure Injection Piping," July 9, 1997). (S.S. is stainless steel, C.S. is carbon steel, and SW is socket weld.)

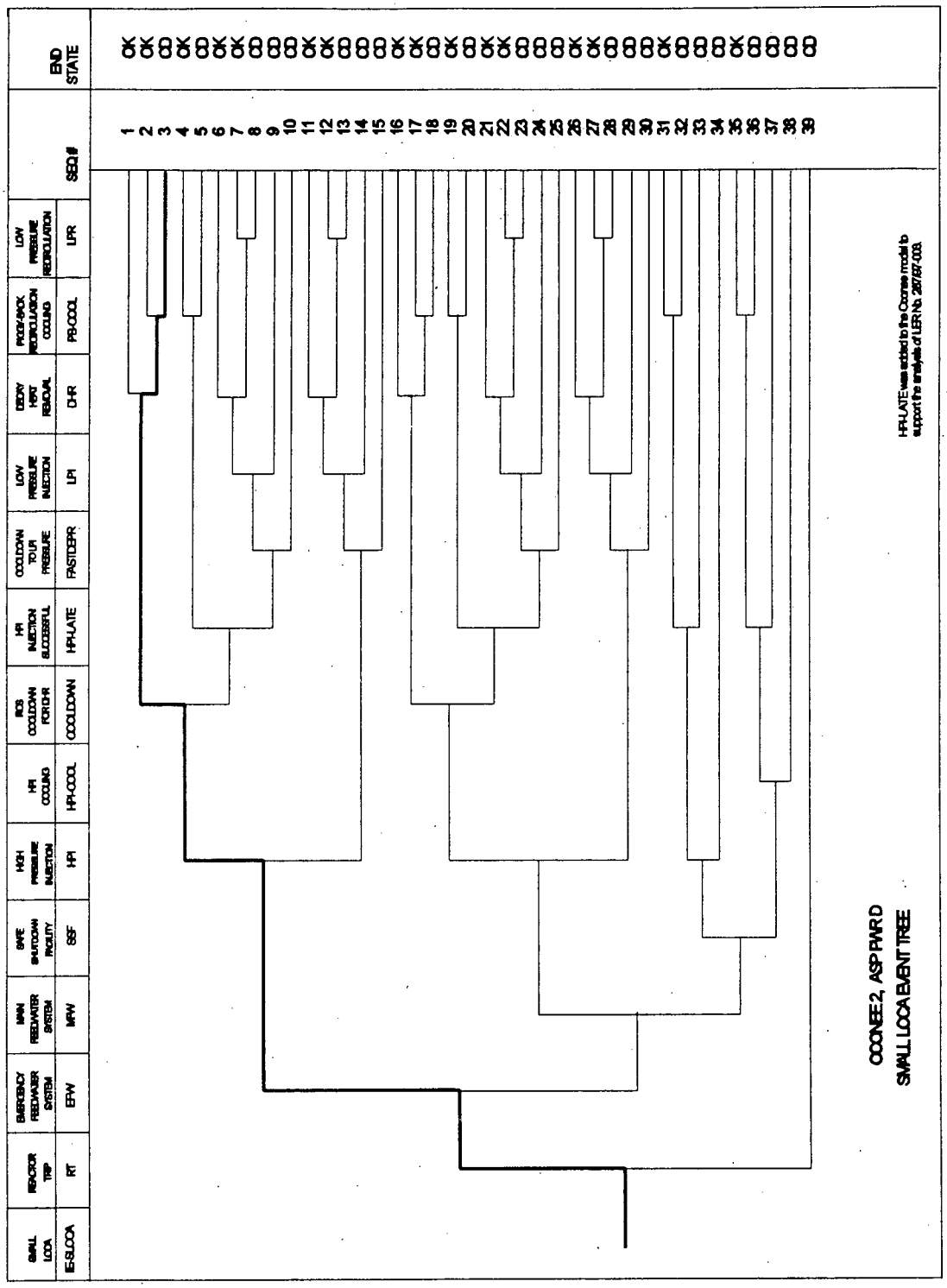

Fig. 4. Dominant core damage sequence for LER No. 270/97-001.

Table 1. Definitions and Probabilities for Selected Basic Events for LER No. 270/97-001

Event name	Description	Base probability	Current probability	Type	Modified for this event
IE-LOOP	Initiating Event–Loss of Offsite Power	3.8 E-006	0.0 E+000		Yes
IE-MLOCA	Initiating Event–Medium Loss-of-Coolant Accident	8.2 E-008	0.0 E+000		Yes
IE-SGTR	Initiating Event–Steam Generator Tube Rupture	1.3 E-006	0.0 E+000		Yes
IE-SLOCA	Initiating Event–Small Loss-of-Coolant Accident	6.5 E-007	2.4 E-002		Yes
IE-TRANS	Initiating Event–Transient	7.8 E-004	0.0 E+000		Yes
DHR-HTX-CF-ALL	Common-Cause Failure (CCF) of the DHR Heat Exchangers	5.2 E-004	5.2 E-004		No
DHR-MDP-CF-ALL	CCF of all Motor-Driven DHR Pumps	2.1 E-004	2.1 E-004		No
DHR-MOV-CC-SUCA	DHR Suction Motor-Operated Valves (MOVs) LP-1 or LP-2 Fail	6.0 E-003	6.0 E-003		No
HPI-LINE-BREAK	Line Break in HPI Loop A	0.0 E+000	1.0 E+000	TRUE	Yes
HPI-MDP-CF-ABC	CCF (to Run) of the Motor-Driven HPI Pumps	6.1 E-006	6.1 E-006		No
HPI-MDP-CF-START	CCF (to Start) of the Motor-Driven HPI Pumps B and C	1.9 E-004	1.9 E-004		No
HPI-MDP-FC-B	HPI Train B Fails	3.9 E-003	3.9 E-003		No
HPI-MDP-FC-C	HPI Train C Fails	3.9 E-003	3.9 E-003		No
HPI-MOV-CC-409	HPI MOV HP409 Fails to Open	3.0 E-003	3.0 E-003		No
HPI-MOV-CC-SUCA	Isolation Valve in HPI Water Supply Path A Fails	4.2 E-003	4.2 E-003		No
HPI-MOV-CC-SUCB	Isolation Valve in HPI Water Supply Path B Fails	4.2 E-003	4.2 E-003		No
HPI-MOV-CF-SUCT	CCF of HPI Suction Isolation MOVs	2.1 E-004	2.1 E-004		No

Table 1. Definitions and Probabilities for Selected Basic Events for LER No. 270/97-001 (Continued)

Event name	Description	Base probability	Current probability	Type	Modified for this event
HPI-MOV-OO-115	MOV HP115 Fails to Close	3.0 E-003	3.0 E-003		No
HPR-MOV-CF-BWST	CCF of Isolation MOVs for the Borated Water Storage Tank (BWST)	7.7 E-005	7.7 E-005		No
LDST-LVL-LOW	Low Water Level in the Let-Down Storage Tank Fails the HPI Pumps	4.4 E-003	4.4 E-003		No
LPR-MOV-CF-BWST	CCF of BWST Isolation MOVs	8.6 E-005	8.6 E-005		No
LPR-SMP-FC-SUMP	Failures in the Reactor Building Sump	5.0 E-005	5.0 E-005		No
PBC-XHE-XM	Operator Fails to Initiate Piggy-Back Cooling	2.2 E-003	2.2 E-003		No
PCS-VCF-HW	Hardware Failures in the Secondary Systems	3.0 E-003	3.0 E-003		No
PCS-XHE-XM-CDOWN	Operator Fails to Initiate Cooldown	1.0 E-002	1.0 E-002		No
PCS-XHE-XM-FDEPR	Operator Fails to Initiate a Fast Depressurization for LPI	1.0 E-001	1.0 E-001		No

Table 2. Sequence Conditional Probabilities for LER 270/97-001

Event tree name	Sequence number	Conditional core damage probability (CCDP)	Percent contribution
SLOCA	03	1.8 E-005	85.6
SLOCA	15	1.2 E-006	5.5
SLOCA	05	1.1 E-006	5.2
SLOCA	10	4.2 E-007	2.0
Total (all sequences)		**2.2 E-005**	

Table 3. Sequence Logic for Dominant Sequences for LER 270/97-001

Event tree name	Sequence number	Logic
SLOCA	03	/RT, /EFW, /HPI, /COOLDOWN, DHR, PB-COOL
SLOCA	15	/RT, /EFW, HPI, FASTDEPR
SLOCA	05	/RT, /EFW, /HPI, COOLDOWN, /HPI-LATE, PB-COOL
SLOCA	10	/RT, /EFW, /HPI, COOLDOWN, HPI-LATE, FASTDEPR

Table 4. System names for LER 270/97-001

System name	Logic
COOLDOWN	RCS Cooldown to DHR Pressure Using Turbine Bypass Valves, etc.
DHR	No or Insufficient Flow from the DHR System
EFW	No or Insufficient Flow from the Emergency Feedwater System
FASTDEPR	RCS Rapid Cooldown/Depressurization to LPI Pressure Using Turbine Bypass Valves, etc. (HPI Failed)
HPI	No or Insufficient Flow from the HPI System
HPI-LATE	HPI Fails Late
PB-COOL	No or Insufficient Flow from Piggy-Back Cooling
RT	Reactor Fails to Trip During a Transient

Table 5. Conditional Cut Sets for Higher Probability Sequences for LER No. 270/97-001

Cut set number	Percent contribution	CCDP[a]	Cut sets[b]
SLOCA Sequence 03		**1.8 E-005**	
1	67.8	1.3 E-005	DHR-HTX-CF-ALL[c]
2	27.4	5.0 E-006	DHR-MDP-CF-ALL
3	1.7	3.2 E-007	DHR-MOV-CC-SUCA, PBC-XHE-XM
SLOCA Sequence 15		**1.2 E-006**	
1	42.9	5.0 E-007	HPI-MOV-CF-SUCT, PCS-XHE-XM-FDEPR
2	38.8	4.6 E-007	HPI-LINE-BREAK, HPI-MDP-CF-START[d], PCS-XHE-XM-FDEPR
3	3.6	4.3 E-008	HPI-MOV-CC-SUCA, HPI-MOV-CC-SUCB, PCS-XHE-XM-FDEPR
4	3.1	3.7 E-008	HPI-LINE-BREAK, HPI-MDP-FC-B, HPI-MDP-FC-C, PCS-XHE-XM-FDEPR
5	2.4	2.8 E-008	HPI-LINE-BREAK, HPI-MOV-CC-409, HPI-MDP-FC-C, PCS-XHE-XM-FDEPR
6	2.4	2.8 E-008	HPI-LINE-BREAK, HPI-MOV-OO-115, HPI-MDP-FC-C, PCS-XHE-XM-FDEPR
7	1.3	1.5 E-008	HPI-MOV-CF-SUCT, PCS-VCF-HW
8	1.3	1.5 E-008	HPI-MDP-CF-ABC, PCS-XHE-XM-FDEPR
9	1.2	1.4 E-008	HPI-LINE-BREAK, HPI-MDP-CF-START, PCS-VCF-HW
SLOCA Sequence 05		**1.1 E-006**	
1	47.4	5.3 E-007	PCS-XHE-XM-CDOWN, PBC-XHE-XM
2	14.2	1.6 E-007	PCS-VCF-HW, PBC-XHE-XM
3	11.2	1.3 E-007	PCS-XHE-XM-CDOWN, DHR-HTX-CF-ALL
4	4.5	5.0 E-008	PCS-XHE-XM-CDOWN, DHR-MDP-CF-ALL
5	3.4	3.7 E-008	PCS-VCF-HW, DHR-HTX-CF-ALL

6	1.9	2.1 E-008	PCS-XHE-XM-CDOWN, LPR-MOV-CF-BWST
7	1.7	1.9 E-008	PCS-XHE-XM-CDOWN, HPR-MOV-CF-BWST
8	1.4	1.5 E-008	PCS-VCF-HW, DHR-MDP-CF-ALL
9	1.1	1.2 E-008	PCS-XHE-XM-CDOWN, LPR-SMP-FC-SUMP
SLOCA Sequence 10		**4.2 E-007**	
1	75.0	3.2 E-007	PCS-VCF-HW, LDST-LVL-LOW
2	25.0	1.1 E-007	PCS-XHE-XM-CDOWN, LDST-LVL-LOW, PCS-XHE-XM-FDEPR
Total (all sequences)		**2.2 E-005**	

[a]The conditional probability for each cut set is determined by multiplying the probability of the initiating event by the probabilities of the basic events in that minimal cut set. The probability of the initiating events are given in Table 1 and begin with the designator "IE." The probabilities for the basic events also are given in Table 1.

[b]Basic event HPI-LINE-BREAK is a type TRUE event. This type of event is not normally included in the output of the fault tree reduction process, but has been added to aid in understanding the sequences to potential core damage associated with the event. This basic event was added to those cut sets that required HPI-LINE-BREAK for the cut set to occur.

[c]Components in the DHR system are shared with the LPI system. For example, the DHR motor-driven pumps are also the LPI pumps when providing low-pressure injection, or piggy-back cooling. Therefore, failure of the DHR pumps results in the failure of both DHR and PB-COOL in this sequence.

[d]This basic event represents the common-cause failure of HPI pumps B and C failing to start. At Oconee, one of the HPI pumps (pump A in this analysis) is always running to provide normal RCS makeup and seal injection; however, its flow is lost due to the HPI line break.

LER No. 270/97-001

Event Description: Unisolable reactor coolant system leak

Date of Event: April 21, 1997

Plant: Oconee 2

Licensee Comments

Reference: Letter from W. R. McCollum, Jr., Site Vice President, Oconee Nuclear Sites, to U. S. Nuclear Regulatory Commission, "Comments on Preliminary Accident Sequence Precursor Analysis of Operational Event at Oconee Nuclear Station, Unit 2 (LER No. 270/97-001)," February 24, 1998.

As discussed below, Duke believes that the value assigned to the conditional probability of a small-break LOCA is not appropriate and that the failure probability of the HPI system to respond to the HPI line break, which is used in this preliminary analysis is conservative compared to the plant specific reliability estimate.

Comment 1: Conditional Small-Break LOCA Probability – While the Swedish Nuclear Power Inspectorate's (SKI) piping failure database provides a source of information on the frequency of piping failures, it is not reasonable to extrapolate this generic data beyond an estimate of the frequency of events. This small group of events (13 leakage events and no ruptures) is inadequate to make a statistical inference of the conditional probability of pipe rupture. Assigning the value of 0.053 for the rupture probability for the Oconee leakage event based on no ruptures in 13 events is not reasonable in a best estimate analysis process. This approach also ignores the phenomenological aspects of crack growth from thermal cycling and the physical attributes of the piping. For example, the analysis does not consider that the piping material is a highly ductile austenitic stainless steel. Piping stress analysis of the failed Oconee piping material concluded that even with the existing crack, the HPI line had enough remaining strength to provide a factor of safety greater than 2 under design basis event loads.

As discussed in several communications with the NRC,[1-5] Duke performed extensive metallurgical examination of the failed piping section and determined that the leaking weld

crack had propagated over a long period of time, believed to be greater than 2 years. The primary initiator of the crack was high-cycle/low-amplitude stresses consistent with thermal cycling in the weld region. This type of crack grows very slowly at specific times when temperature and flow variations occur in the reactor coolant system (RCS) or the high-pressure injection (HPI) makeup flow. After the onset of the initial leak (2.36 gal/min) in the April 21, 1997, Oconee Unit 2 event, the leakage rate increased gradually over the next 19 h, peaking at 12 gal/min. The increase in RCS leakage rate between initial discovery and unit shutdown was not believed to be due to additional growth of the crack itself. It is more plausible that the gradual increase in leakage rate was caused by the erosion of material within the opened crack or other undetermined mechanisms. Without substantial additional growth of the crack or a substantial external load [much greater than design-basis accident (DBA) conditions], it is highly improbable that a catastrophic rupture (small-break LOCA) could occur.

Duke's conclusion from these examinations and analysis was that the probability of complete rupture of this line was still very small. This type of event is not well suited for accident sequence precursor (ASP) analysis given the current state of materials engineering and operational experience and the extrapolation necessary to obtain a conditional probability of the initiating event.

Response 1: Following the receipt of Duke's comments, the probability of pipe rupture was reassessed. Although the pipe rupture probability was reduced by a factor of 2, the revised CCDP estimate was still above the ASP cutoff value of 1.0×10^{-6}. In the actual event the crack developed slowly and began to leak. This leakage was detected and the plant was shut down while the injection line remained substantially intact. Probabilistically, however, it is possible that the crack could have developed differently, resulting in a catastrophic failure of the injection line before detection.

To develop an estimate of the conditional probability that a piping failure (crack, leak, or rupture), the SKI piping-failure database[6] was queried for thermal-fatigue failures. Twenty events involving cracks or leaks in 1 to 4 in stainless steel piping were identified. Using Bayesian statistics with a binomial noninformative prior,[7] a conditional probability of rupture given failure of 2.4×10^{-2} was calculated. Although associated with an observed leak, the probability of pipe rupture estimated in the analysis represents the likelihood that the defect *could* have progressed to a rupture at some time during its development, and not necessarily the probability that the leak, as it ultimately developed, *would* have proceeded further to a rupture. This approach is similar to that used in other degradation analyses (as well as in ASP analyses of degraded components).

It is noted in the **Modeling Assumptions** section that because no ruptures have been observed, this estimate may be conservative. As such, a confirmatory estimate was made using cyclic (vibration-induced) fatigue data. Several of the thermal-fatigue-induced failures in the SKI

database also included cyclic fatigue as a contributing factor, which may have been the case in the Oconee event as well. Of the 78 failures, two cyclic fatigue-related ruptures have been observed, resulting in an estimated conditional probability of 3.2×10^{-2}. This is about the same as the estimate for thermally induced fatigue. These values are consistent with, and in some cases smaller than, the estimates developed in other studies [e.g., Thomas[8] (2–45%) and EPRI[9] (9–11%)].

The **Modeling Assumptions** section was also expanded to acknowledge the potential use of probabilistic fracture mechanics as an alternate to the "data-driven" models used in the ASP event analysis and to note, based on Ref. 6, that under similar boundary conditions, the two methods produce similar (i.e., the same order of magnitude) results.

In addition to the use of the revised conditional probability of pipe rupture, the analysis was revised to describe the significant uncertainty in the probability estimate and the causes of the uncertainty (including the results of one fracture mechanics study that indicated high conditional rupture probabilities for weld cracks in stainless steel piping), and to describe the reasons behind the choice of a small-break LOCA instead of a medium-break LOCA for the analysis (a medium-break LOCA is indicated based on injection line diameter alone).

Comment 2: HPI System Failure Probability – Duke's review of the preliminary ASP basic event probabilities showed that most of the values were consistent with Duke probabilistic risk assessment (PRA) analyses, with the important exceptions of HPI-MDP-CF-START (Common-Cause Failure of Motor-Driven HPI Pumps B and C to Start) and HPI-XHE-XM-PMPB (Operators Fail to Align HPI Pump B to Loop B). Duke believes that the values for these events are overly conservative and should be lowered.

In the case of a common-cause failure of HPI pumps B and C to start, the ASP assessment value of 6.3×10^{-4} is a factor of 5 higher than the most recent Duke analysis.[10] This value is also high relative to the ASP failure probability assigned for individual HPI pump train failure (3.9×10^{-3}). Generally, common cause start failure probabilities should not exceed 10% of the single train start failure probability unless a detailed plant-specific common-cause assessment is performed to support using a higher common-cause value.

Event HPI-XHE-XM-PMPB models the failure of operators to align HPI Pump B to RCS Loop B by opening MOV HP-409. This action is proceduralized in the Oconee Emergency Operating Procedure (EOP) (EP/2/A/1800/01) under Enclosure 505 "ES Actuation" Steps 2.3 and 2.4. In these steps, operators verify that the minimum injection flow required for each header is met and that HPI pump runout limits are not exceeded. If the required HPI flow to

header B is not met, operators are directed to open HP-409. Operators receive extensive training on this enclosure and specifically on HPI line break events. Failure to perform this clear and straightforward action was quantified at 1.0×10^{-3} in the Oconee IPE and was verified in more recent analysis.[11,12] The value used in the ASP analysis is an order of magnitude higher and is considered to be overly conservative.

Response 2: All common-cause failure probabilities used in the analysis have been revised to be consistent with data developed by the Idaho National Engineering and Environmental Laboratory (INEEL) for NRC.[13] For HPI-MDP-CF-START, this resulted in a reduction in probability to 1.9×10^{-4}. In addition, the probability for HPI-XHE-XM-PMPB was revised to 1.0×10^{-3} to be consistent with the value used in the Oconee IPE.

Comment 3: The question of whether or not the conditional core damage probability of this event is less than the precursor threshold (10^{-6}) depends primarily on the value assigned to the conditional probability that the leakage event would have progressed to a small-break event. Duke believes it is very difficult to select a specific value for this probability. Since it is very difficult to assign a number to such a "precursor to a small break LOCA initiating event", Duke suggests that this event be treated as a "potentially significant event considered impractical to analyze."

Response 3: The significant uncertainty in the conditional probability of a small-break LOCA given the observed leakage is acknowledged. While the conditional probability used in the final analysis is a factor of two lower than that used in the preliminary analysis, the event still satisfies the criteria for a precursor. As noted in the response to Comment 1, the analysis has been revised to describe the significant uncertainty in the pipe rupture probability estimate and the causes of that uncertainty. As discussed in the above response to Comment 2, the common cause failure (CCF) probabilities were revised to be consistent with recently published data obtained from industry operational experience.[13] This resulted in a reduction in many of the key CCF probabilities from the values used in the preliminary analysis of this event. However, the CCF probabilities for the DHR heat exchangers and the motor-driven DHR pumps increased significantly. (For the heat exchangers, this was partially due to a change in the effective surveillance interval based on time between shutdowns, similar to the approach used in the Oconee IPE.[11]) The net result of these changes was an increase of a factor of two in the estimated CCDP for this event.

References

1. J. W. Hampton to U.S. NRC, "Justification for Continued Operation of Oconee Unit 1 Based on Oconee Unit 2 HPI Line Leak," May 2, 1997.

2. J. W. Hampton to U.S. NRC, "Response to Request for Additional Information on the High Pressure Injection (HPI) System," May 9, 1997.

3. J. W. Hampton to U.S. NRC, "Response to Request for Additional Information on the High Pressure Injection (HPI) System," May 13, 1997.

4. J. W. Hampton to U.S. NRC, "Justification for Continued Operation of Oconee Unit 1 Based on Oconee Unit 2 HPI Line Leak – Supplemental Information," May 19, 1997.

5. J. W. Hampton to U.S. NRC, "Justification for Continued Operation of Oconee Unit 1 Based on Oconee Unit 2 HPI Line Leak – Supplemental Information," May 22, 1997.

6. R. Nyman, D. Hegedus, B. Tomic, and B. Lydell, *Reliability of Piping System Components, Framework for Estimating Failure Parameters from Service Data*, SKI Report 97:26, December 1997.

7. *PRA Procedures Guide*, NUREG/CR-2300, p. 5-36, January 1983.

8. H. M. Thomas, "Pipe and Vessel Failure Probability," *Reliability Engineering*, 2:83 (1981).

9. *Pipe Failures in U.S. Commercial Nuclear Power Plants*, EPRI TR-100380, July 1992.

10. Duke Power Company, "Oconee Nuclear Station HPI Reliability Study," December 1977.

11. Duke Power Company, *Oconee Nuclear Station IPE Submittal Report*, 1989.

12. Duke Power Company, *Oconee Nuclear Station PRA Revision 2 Summary Report*, December 1996.

13. Marshall and Rasmuson, *Common Cause Failure Data Collection and Analysis System*, INEL-94/0064, December 1995.