Tennessee Valley Authority, 1101 Market Street, Chattanooga, Tennessee 37402

CNL-15-094

August 26, 2015

10 CFR 50.4

U.S. Nuclear Regulatory Commission
ATTN: Document Control Desk
Washington, D.C. 20555-0001

Watts Bar Nuclear Plant, Unit 2
Construction Permit No. CPPR-92
NRC Docket No. 50-391

Subject: **Watts Bar Nuclear Plant Unit 2, Responses to Requests for Additional Information - Developmental Revision I Technical Specification Section 3.8**

References:

1. TVA Letter to NRC, "Watts Bar Nuclear Plant Unit 2 – Submittal of Developmental Revision I of the Unit 2 Technical Specification & Technical Specification Bases and Developmental Revision D of the Unit 2 Technical Requirements Manual and Technical Requirements Manual Bases," dated June 16, 2014 [ML14169A525]

2. Email from M. Miernicki (NRC) to G. Arent (TVA), "TS Review Clarification RAIs 10 07 2014," dated October 8, 2014 [ML14286A029]

3. TVA Letter to NRC, "Watts Bar Nuclear Plant Unit 2, Responses to Requests for Additional Information - Developmental Revision I Technical Specification Sections 3.8 and 5.7," dated February 27, 2015 [ML15064A160]

4. Email from R. Schaaf (NRC) to G. Arent (TVA), "Draft of Outstanding Issues on TS Rev I Section 3.8," dated April 27, 2015

By letter dated June 16, 2014, Tennessee Valley Authority (TVA) submitted the Watts Bar Nuclear Plant (WBN) Unit 2 Developmental Revision I of the Technical Specifications (TS) and TS Bases, and Developmental Revision D of the WBN Unit 2 Technical Requirements Manual (TRM) and TRM Bases to the Nuclear Regulatory Commission (NRC) (Reference 1). By electronic mail (email) dated October 8, 2014, the NRC provided a set of requests for additional information (RAIs) regarding Developmental Revision I of TS Sections 3.8 and 5.7 (Reference 2). By letter dated February 27, 2015, TVA submitted responses to the Reference 2 RAIs (Reference 3). By email dated April 27, 2015, the NRC provided a draft set of RAIs regarding outstanding issues on TS Section 3.8 (Reference 4).

The enclosure provides the TVA responses to the Reference 4 RAIs regarding outstanding issues on TS Section 3.8.

There are no new regulatory commitments associated with this letter. Please direct any questions concerning this matter to Gordon Arent at (423) 365-2004.

I declare under penalty of perjury that the foregoing is true and correct. Executed on the 26th day of August 2015.

Respectfully,

J. W. Shea

Digitally signed by J. W. Shea
DN: cn=J. W. Shea, o=Tennessee Valley Authority, ou=Nuclear Licensing, email=jwshea@tva.gov, c=US
Date: 2015.08.26 14:28:14 -04'00'

J. W. Shea
Vice President, Nuclear Licensing

Enclosure:

Responses to NRC Requests For Additional Information – Developmental Revision I
Technical Specification Section 3.8

cc (Enclosure):

U.S. Nuclear Regulatory Commission, Region II
NRC Senior Resident Inspector - Watts Bar Nuclear Plant, Unit 2
NRC Project Manager - Watts Bar Nuclear Plant, Unit 2

Enclosure

Responses to NRC Requests For Additional Information – Developmental Revision I Technical Specification Section 3.8

Background

By letter dated June 16, 2014, Tennessee Valley Authority (TVA) submitted the Watts Bar Nuclear Plant (WBN) Unit 2 Developmental Revision I of the Technical Specifications (TS) and TS Bases, and Developmental Revision D of the WBN Unit 2 Technical Requirements Manual (TRM) and TRM Bases to the Nuclear Regulatory Commission (NRC) (Reference 1). By electronic mail (email) dated October 8, 2014, the NRC provided a set of requests for additional information (RAIs) regarding Developmental Revision I of TS Sections 3.8 and 5.7 (Reference 2). By letter dated February 27, 2015, TVA submitted responses to the Reference 2 RAIs (Reference 3). By email dated April 27, 2015, the NRC provided a draft set of RAIs regarding outstanding issues on TS Section 3.8 (Reference 4).

The following responses to the Reference 4 RAIs address the NRC staff concerns that were communicated to TVA during the public meeting held in Rockville, MD on April 30, 2015.

NRC RAI 1

TS Section 3.8.1

TS Section 3.8.1 is related to operating requirements and surveillance testing of onsite Diesel Generators (DGs) 2A-A and 2B-B. The staff notes that:

1. *All four DGs are required to be operable with Unit 2 in Modes 1, 2, 3, or 4.*
2. *Several DG surveillances in TS Section 3.8.1 are precluded by a note stating, "For DGs 2A-A and 2B-B Surveillance shall not be performed in MODE 1, 2, 3, or 4."*

The current licensing basis (CLB) of WBN Units 1 and 2 requires support systems such as essential raw cooling water and the component cooling system in each train to be operable. The CLB states that the minimum combined safety requirements for one accident unit and one non-accident unit or two non-accident units are met by two pumps on the same plant train. With one unit in a shutdown mode and the other unit in Mode 1, some or all the 'common' loads may be operating and can potentially impact the testing of systems/components associated with the shutdown units. Based on the above observations, in its RAI the staff asked the applicant to clarify how all four DGs will be tested to satisfy the surveillance requirements (SRs) for each operating unit.

In response to the RAI, TVA stated that:

1. *In the Safety Evaluation related to WBN Unit 1 License Amendment 89, dated November 22, 2011 (Reference 14), Section 3.2, "Need for Proposed Change," the NRC accepted proposed changes to allow performance of the preoperational integrated safeguards test of WBN Unit 2 with WBN Unit 1 in MODE 1, 2, 3, or 4.*
2. *If the NRC grants an Operating License to WBN Unit 2, the proposed changes to the WBN Unit 1 TSs will allow periodic performance of the Surveillances on WBN Unit 2 in MODE 5 or 6 with WBN Unit 1 in MODE 1, 2, 3, or 4.*
3. *The guidance provided by the Commission in SECY-07-0096, allows the applicant to maintain TS requirements for Unit 2 similar to the requirements for Unit 1.*

The staff notes that:

1. *The preoperational integrated safeguards test is 'one time' testing required to validate the design and functional capabilities of the plant systems prior to full power operation, compared to the TS surveillances which will be performed routinely over the life of the operating units.*
2. *SECY-07-0096 also stated that significant changes to the licensing approach would be allowed as necessary to support dual unit operation.*

The staff determined that the applicant's response did not clarify the impact on safe shutdown capability of the operating unit when equipment required for dual unit operation is removed from service for testing purposes. At WBN Units 1 and 2, the load group 'A' and load group 'B' philosophy for dual unit operation does not appear to provide independence between redundant and/or corresponding components.

The staff considers the applicant's response to be inadequate and considers this an open item.

TVA Response

The proposed Unit 2 TS SR Notes effectively remove the Mode restriction from the Unit 2 6.9 kV shutdown boards and DGs to allow testing with Unit 2 in Mode 5 or 6 and with Unit 1 in Mode 1, 2, 3, or 4. The existing Unit 1 TS SR Notes effectively remove the Mode restriction from the Unit 1 6.9 kV shutdown boards and DGs to allow testing with Unit 1 in Mode 5 or 6 and with Unit 2 in Mode 1, 2, 3, or 4.

The on-site distribution system at WBN is divided into independent load groups which provide independence of the Emergency Core Cooling Systems (ECCS) between trains and units. This design allows components in one load group to be removed from service or tested without imposing an impact to the redundant train or a significant impact to the operation of the opposite unit. The 6.9 kV shutdown board in each group is protected by an independent set of undervoltage and protective relaying. Additionally, there is no sharing of DGs between load groups. Some systems are common to both units, e.g., Essential Raw Cooling Water (ERCW) System, Component Cooling System, Auxiliary Air, and various engineered safety feature (ESF) heating, ventilation, and air conditioning (HVAC) loads. Some of these system components are powered from 6.9 kV Shutdown Board 2A-A or 2B-B, which are provided with standby power from the DG 2A-A or 2B-B, respectively. However, redundant trains of common systems are still on independent load groups and therefore, testing will not result in loss of the function.

Although the performance of a Unit 2 loss of offsite power (LOOP) / ESF test with Unit 1 in Mode 1 will result in entering Unit 1 TS Conditions for equipment made inoperable, performance of the SR will not cause a loss of safety function.

The portions of the 6.9 kV and 480 V electrical distribution system that are not being tested will not be significantly affected. The portions of the 6.9 kV and 480 V electrical distribution systems being tested will be de-energized at various points during the test, but significant perturbation of Unit 1 ESF equipment is not anticipated.

The 120 V vital AC and 125 V vital DC systems supported by the unit / train being tested could be challenged due to loss of normal AC power to the associated inverter and loss of the vital battery charger. However, the vital AC board and vital battery board will remain energized by the associated vital battery. Therefore, a loss of a vital board is unlikely and is not anticipated.

For example, during performance of the Unit 2 Train A LOOP / ESF test, the normal power supply to Vital Inverters 1-III and 2-III and the power supply to Vital Battery Charger III will be lost while testing personnel verify that the affected components are in their post-LOOP positions. During this time, LCO 3.8.4, "DC Sources - Operating," is not met (loss of power to Vital Battery Charger III). LCO 3.8.4, Condition A, requires power be restored to Vital Battery Charger III within 2 hours. However, during performance of the test, Vital Battery Board III remains energized from Vital Battery III, and Inverters 1-III and 2-III remain energized from Vital Battery III. Therefore, the loss of power to Vital Battery Charger III and normal power to Vital Inverters 1-III and 2-III does not result in a loss of function. The expected duration of this condition during the test is approximately 30 minutes. If necessary, the test can be aborted and normal power can be restored to Vital Battery Charger III in approximately 5 to 10 minutes.

Some common systems could be affected during the test (primarily, ERCW, Core Cooling System (CCS), Auxiliary Air and safety-related ventilation systems). For example, during the performance of SR 3.8.1.9, single largest load reject test, the running ERCW pump associated with the DG being tested is placed in the pull-to-lock position to verify acceptable DG response to a loss of the single largest load. This action results in LCO 3.7.8, "Essential Raw Cooling Water (ERCW) System," not being met. However, fluctuations in ERCW System pressure should not significantly affect CCS heat exchanger operation or Unit 1 containment temperatures due to the short duration of the test (approximately 30 minutes). Additionally, during performance of the testing, main control room operators monitor ERCW System pressure and make adjustments as necessary to maintain system pressure.

The flexibility of the CCS allows alternate system alignments during the test to minimize impacts to the operating unit. For example, during a test of DG 2A-A, CCS Pump C-S is running to maintain cooling on CCS Train B (provides cooling to both units). CCS pump 2A-A runs in parallel with CCS pump 2B-B to ensure Unit 2 CCS Train A flow. CCS pump 1A-A runs in parallel with CCS pump 1B-B to maintain cooling to the Unit 1 CCS Train A header. Therefore, CCS operation to Unit 1 is unaffected during the test.

Auxiliary air is powered from Unit 2 6.9 kV shutdown boards. However, the normal lineup is for control air (powered from Unit 1 6.9 kV shutdown boards) to provide the motive force for ESF system components, with auxiliary air providing the safety-related backup. Therefore, although the affected ESF trains will be inoperable without a backup auxiliary air compressor, these components will continue to be functional throughout the Unit 2 testing. With one train of auxiliary air unavailable, the applicable TS Conditions of the following LCOs will be entered: LCO 3.6.9, "Emergency Gas Treatment System," LCO 3.7.4, "Atmospheric Dump Valves," LCO 3.7.5, "Auxiliary Feedwater System," LCO 3.7.10, "Control Room Emergency Ventilation System," LCO 3.7.11, "Control Room Emergency Air Temperature Control System," and LCO 3.7.12, "Auxiliary Building Gas Treatment System." The duration of the TS Condition entries for an unavailable auxiliary air compressor is expected to be no longer than two hours.

In addition, prior to performance of the testing, the following are performed to ensure safe shutdown capability is maintained and to minimize impacts on the operating unit:

- Testing is performed on 6.9 kV shutdown boards and DGs associated with the unit in Mode 5 or 6.
- For Train A testing, Train B is protected. For Train B testing, Train A is protected.
- Each vital battery charger is verified to be aligned to its normal power supply.
- Each 6.9 kV shutdown board is verified to be aligned to its normal power supply.

SR 3.8.1.9

This SR requires the performance of the single largest load reject test for each DG. This test is performed with the DG supplying the 6.9 kV shutdown board, immediately following performance of the LOOP / ESF actuation test (SR 3.8.1.19). Therefore, the test begins with the DG on the 6.9 kV shutdown board with ESF loads connected and the selected ERCW pump running. The ERCW pump switch is then taken to the pull-to-lock position, thereby removing the single largest load from the DG. During the time that the ERCW pump switch is in the pull-to-lock position that train of ERCW is considered inoperable and the appropriate Action of LCO 3.7.8, “Essential Raw Cooling Water (ERCW) System,” is entered.

SR 3.8.1.10

This SR requires the performance of the full load reject test for each DG. This test is performed with the DG aligned to the 6.9 kV shutdown board connected to offsite power. The DG is loaded as close to design basis conditions as possible (approximately 4300 kW and 3100 kVAR). DG temperatures are then allowed to stabilize. Once conditions are met, a safety injection signal is simulated to trip open the DG output breaker. The impact to the 6.9 kV shutdown board is minimal, and the 6.9 kV shutdown board should remain energized to meet the acceptance criteria for the test.

SR 3.8.1.11 and SR 3.8.1.16

This SR requires the performance of the LOOP test for each DG. After the LOOP is simulated, the DG is verified to start, energize the 6.9 kV shutdown board, auto-connect the emergency loads, achieve steady state voltage and frequency, and operate for at least five minutes. After operating for at least five minutes, the DG is synchronized with offsite power, the loads are transferred to offsite power, and the DG is returned to a ready-to-load condition.

This test is performed with the normal feeder for 6.9 kV Shutdown Board 2A-A open, thereby isolating the 6.9 kV shutdown board from the common station service transformer (CSST). This action places Unit 1 in LCO 3.8.1, Condition A for a loss of offsite power source.

Auxiliary air is powered from Unit 2 6.9 kV shutdown boards, therefore one of the auxiliary air trains will be impacted by de-energizing one of the two Unit 2 6.9 KV shutdown boards. However, the normal lineup is for control air (powered from Unit 1 6.9 kV shutdown boards) to provide the motive force for ESF system components, with auxiliary air providing the safety-related backup. Therefore, although the affected ESF trains will be inoperable without a backup auxiliary air compressor, these components will continue to be functional throughout the

Unit 2 testing. With one train of auxiliary air unavailable, the applicable Conditions of TS LCOs 3.6.9, 3.7.4, 3.7.5, 3.7.10, 3.7.11, and 3.7.12 will be entered.

When this test is performed on Train 2B, CCS pump 1B is re-aligned to ensure CCS Train B remains operable on Unit 1.

Additionally, this test results in the loss of one train of vital DC when the associated 6.9 kV shutdown board is de-energized. This requires Unit 1 entry into LCO 3.8.4, Conditions A and C (restore in 2 hours). However, the vital AC board and vital battery board will remain energized by the associated vital battery. Therefore, a loss of a vital board is unlikely and is not anticipated.

SR 3.8.1.18

This SR requires verification that the time delay setting for each sequenced load block is within limits. Performance of this test involves individually placing component breakers in test and applying external signals to drive the load sequence relays. There is no impact to the electrical distribution system due to the testing because no loads are connected. However, the LCO Action associated with the component breaker being placed in test is entered during testing of the breaker.

SR 3.8.1.19 and SR 3.8.1.13

SR 3.8.1.19 requires performance of the LOOP / ESF test for each DG. SR 3.8.1.16 requires verification that each DG can synchronize to the offsite power source while loaded with emergency loads upon a simulated restoration of offsite power, transfer loads to the offsite power source, and return to ready-to-load operation. SR 3.8.1.13 requires verification that the DG automatic trips are bypassed on an automatic or emergency start signal. For the DG being tested, the associated 6.9 kV shutdown board is de-energized and load shedding is verified. A manual safety injection actuation signal is initiated. The DG is verified to start, energize the 6.9 kV shutdown board, auto-connect the emergency loads, achieve steady state voltage and frequency, and operate for at least five minutes. In addition, the DG automatic trips are verified to be bypassed.

NRC RAI 2

TS SR 3.8.1.8

Similar to TS 3.8.1 subsections, SR 3.8.1.8 has a note that states that for the 2A-A and 2B-B Shutdown Boards, the Surveillance shall not be performed in MODE 1 or 2. The surveillance requires verification of automatic and manual transfer of each 6.9 kV shutdown board power supply from the normal offsite circuit to each alternate offsite circuit. The staff requested the following information:

1. *Clarify when this surveillance will be performed on each of the four shutdown boards that are required when Unit 2 is in Mode 1 or 2.*
2. *Clarify if 'each' includes shutdown boards 1A-A, 1B-B, 2A-A and 2B-B and how the applicable note for surveillances in Mode 1 or 2 will impact each of the shutdown boards.*

TVA's response cites exemptions granted for preoperational testing and the guidance provided by the Commission in SECY-07-0096 for similarity with WBN Unit 1 and using WBN Unit 1 as the reference basis for the review and licensing of WBN Unit 2. The applicant stated "the proposed adoption of the WBN Unit 1 TS 3.8.1 SR Notes, as amended by WBN Unit 1 License Amendment 89, represents conforming changes to the WBN Unit 2 TS 3.8.1 SR Notes."

The staff concludes that the TS requirements for dual unit operation should be reviewed for impact on systems required at both units in all operating modes. Simple adoption of constraints associated with a single unit may lead to non-conservative plant conditions with shared systems.

The staff considers the applicant's response to be inadequate and considers this an open item.

TVA Response

The test consists of manual and auto transfer of 6.9 kV shutdown boards from the normal offsite power supply to the alternate offsite power supply (C or D CSST). The performance of this test does not render the 6.9 kV Shutdown Board inoperable while transferring power sources from the normal feeder to the alternate feeder then back to the normal feeder. The performance of the surveillance will not initiate a significant perturbation in the electrical distribution system that could challenge a plant safety related system, or challenge steady state conditions to the unit online.

Failure of this surveillance will not challenge or cause an operational transient or challenge to plant safety systems for the unit online. The ability of the 6.9 kV shutdown board to transfer to the DG will not be inhibited should the ability of the electrical board to automatically or manually transfer to the alternate feeder breaker not be functional. The LOOP circuits will still automatically strip the board and allow the DG starting and loading sequence to occur providing power to the ESF systems as designed.

NRC RAI 3

TS SR 3.8.1.13

TS SR 3.8.1.13 is related to verification of each DG's automatic trips that are bypassed on automatic or emergency start signal with the exception of

a. Engine overspeed; and
b. Generator differential current

The staff requested clarification for specific contacts that will be tested for normal/emergency mode of operation of the DGs and bypassed during emergency mode of operation in accordance with proposed WBN Unit 2 TS SR 3.8.1.13. In response, TVA provided details on the functional requirements of the associated contacts and stated that "WBN procedures periodically verify the capability of the DG trip relays and associated instrumentation to actuate a DG trip." TVA did not provide details on the specific contacts and the frequency of testing associated with TS SR 3.8.1.13.

The staff considers the applicant's response to be inadequate and considers this an open item.

TVA Response

Following the discussions of the public meeting held in Rockville, MD on April 30, 2015, it is TVA's understanding that the NRC requests a copy of the maintenance instructions that test the DG engine overspeed and generator differential current trips. Attachment 1 to this enclosure provides a copy of the maintenance instruction for testing the DG engine overspeed trip. In addition, a copy of the preventative maintenance work instruction for performing the DG 1A-A protective relay functional test (including differential current relay test) and a copy of the preventative maintenance work instruction for performing the DG 1A-A differential current relay calibration test. Preventative maintenance work instructions for DGs 1B-B, 2A-A, and 2B-B provide similar testing of the differential current relays associated with those DGs.

NRC RAI 4

TS SR 3.8.1.14

SR 3.8.1.14 has a requirement to test the DG at postulated accident profile and states:

> *Verify each DG operating at a power factor ≥ 0.8 and ≤ 0.9 operates for ≥ 24 hours:*
> *a. For ≥ 2 hours loaded ≥ 4620 kW and ≤ 4840 kW and ≥ 3465 kVAR and ≤ 3630 kVAR; and*
> *b. For the remaining hours of the test loaded ≥ 3960 kW and ≤ 4400 kW and ≥ 2970 kVAR and ≤ 3300 kVAR.*

The CLB, as stated in Final Safety Analysis Report, Section 8.1.5.3, indicates the postulated accident loading is equal to or greater than the nominal DG rating. Since the proposed lower limit of test load in TS SR 3.8.1.14 (b), 3960 kW and 2970 kVAR, is less than the nominal rating of the DGs, the staff requested TVA to confirm that the DG testing requirements will envelope the postulated accident loads.

In response to the RAI, TVA stated "Worst case loading occurs for a simultaneous loss of offsite power and a loss-of-coolant accident on the unit the diesel is associated with. Adequate margin exists between worst case loading and diesel capacity. To satisfy the continuous rating, it may be necessary for operator action to remove certain loads not required for accident mitigation within 2 hours of starting a diesel."

The staff notes that for the DGs to be considered operable, support structures, systems and components (SSC) must be capable of performing the safety functions specified by the design, within the required range of design physical conditions, initiation times, and mission times. In addition, TS operability considerations require that SSCs meet all surveillance requirements. The satisfactory completion of this SR validates the capability of the DG to perform its required functions as specified in the current licensing basis. The applicant did not confirm that the TS proposed surveillance requirements will envelope the postulated accident loads of the DG.

The staff considers the applicant's response to be inadequate and considers this an open item.

TVA Response

WBN Unit 1, UFSAR Section 8.1.5.3, provides WBN's commitment to Regulatory Guide (RG) 1.9, Revision 3. RG 1.9, Revision 3, Regulatory Position C2.2, "Test Descriptions," provides the following description of the "Endurance and Margin Test":

> *2.2.9* ***Endurance and Margin Test:*** *Demonstrate full-load carrying capability at a power factor between 0.8 and 0.9 for an interval of not less than 24 hours, of which 2 hours are at a load equal to 105 to 110 percent of the continuous rating of the emergency diesel generator, and 22 hours are at a load equal to 90 to 100 percent of its continuous rating. Verify that voltage and frequency requirements are maintained.*

WBN Unit 1, UFSAR Section 8.1.5.3, annotates that the unit fully conforms with Regulatory Position C2.2.9.

In Reference 3, TVA stated that the continuous rating for each DG is 4400 kW. Therefore, per RG 1.9, Revision 3, Regulatory Position C2.2.9, the 22 hour portion of the endurance and margin test is performed at a load equal to at least 90 percent, or, 4400 kW x 0.9 = 3960 kW.

As WBN Unit 1 TS SR 3.8.1.14 requires each DG to be loaded for the remaining hours [22 hours] at ≥ 3960 kW and ≤ 4400 kW, this meets RG 1.9, Revision 3, Regulatory Position C2.2.9.

In addition, the current predicted maximum steady-state running loads on the DG for the worst case event are as follows:

		DG 1A-A	DG 1B-B	DG 2A-A	DG 2B-B
0 - 2 hours of the event	**kW**	4313.57	4220.24	4200.69	4332.97
	kVA	4969.12	4817.48	4819.42	4990.28
	pf	0.868	0.876	0.872	0.868
2 hours to end of the event					
	kW	4148.39	4066.52	4033.27	4162.67
	kVA	4768.89	4687.93	4625.20	4765.54
	pf	0.870	0.867	0.872	0.873

The TS SR 3.8.1.14 requirements to load the DG for 2 hours at 4620 to 4840 kW and 3465 to 3630 kVAR, and for the next 22 hours at 3960 to 4400 kW and 2970 to 3300 kVAR could result in power factors less than 0.8. Therefore, the surveillance instructions (SI) that implement SR 3.8.1.14 require a narrower band for real power (kW) and reactive power (kVAR) to ensure a power factor greater than 0.8.

For time 0 to 2 hours, the surveillance instructions (SIs) require real power in the range of 4700 to 4840 kW and reactive power in the range of 3465 to 3525 kVAR. For time 2 hours to 24 hours, the SIs require real power in the range of 4200 to 4400 kW and reactive power in the range of 2970 to 3150 kVAR. Therefore, although not a requirement to meet the acceptance criteria of SR 3.8.1.14 or RG 1.9, Position C2.2.9, the procedural requirements result in DG loading that envelops the predicted accident loads, including the cumulative impacts of DG voltage and frequency at a power factor conservative to the predicted reactive loading on the DG.

NRC RAI 5

TS SR 3.8.4.5 and SR 3.8.4.6

SR 3.8.4.5 and 3.8.4.6 require verification of no visible corrosion at terminals and connectors for the vital and DG batteries. The SR also provides limiting connection resistances for each battery connection to determine battery operability. The SR does not provide an acceptance criterion for the total resistance that should be used for operability determination. The staff requested TVA to confirm that the total battery resistance calculated with each connection at the maximum TS limited value will ensure adequate battery terminal voltage required for safety functions at the end of predicted life. The applicant stated that the WBN has procedures that implement these SRs and that the WBN Unit 2 TSs reflect the same requirements for monitoring and maintaining the batteries that are in the WBN Unit 1 TSs. TVA's response did not clarify the resistance value required to establish battery operability. (This concern is also applicable to SR 3.8.4.9 and SR 3.8.4.10.)

The staff considers the applicant's response to be inadequate and considers this an open item.

TVA Response

Technical Specification Bases 3.8.4, DC Sources - Operating, LCO section, states that an OPERABLE vital DC electrical power subsystem requires all required batteries and respective chargers to be operating and connected to the associated DC buses.

As stated in the WBN Unit 2 and Unit 1 TS Bases for SR 3.8.4.8, SR 3.8.4.9, and SR 3.8.4.10, visual inspection and resistance measurements of intercell, interrack, intertier, and terminal connections provide an indication of physical damage or abnormal deterioration that could indicate degraded battery condition. In addition, the Bases state that for the purpose of trending, intercell (vital and DG batteries) and intertier (vital and DG batteries) connections are measured from battery post to battery post. Interrack (vital batteries), intertier (DG batteries), and terminal connections (vital and DG batteries) are measured from terminal lug to battery post.

As described in the TS Bases for SR 3.8.4.13, the battery service test is a test of battery capability, as found, to satisfy the design requirements (battery duty cycle) of the DC electrical power system. The discharge rate and test length should correspond to worst case design duty cycle requirements. This battery service test is used to verify battery operability.

This understanding is reflected in the NRC's approval of Technical Specifications Task Force (TSTF) Traveler TSTF-500, "DC Electrical Rewrite - Update to TSTF-360," Revision 2 as stated in Federal Register Notice (FRN) dated September 1, 2011 (Reference 5). In the approved TSTF-500, the proposed change relocates the requirements of the following: SR 3.8.4.2 (visual inspection and connection resistance), SR 3.8.4.3 (visual inspection for physical damage), SR 3.8.4.4 (remove visible corrosion and ensure that connections are clean and tight), and SR 3.8.4.5 (verification of connection resistance) to the [new] Battery Monitoring and Maintenance Program.

In the evaluation for removal of the visual inspection from TS, the NRC stated the following:

> *However, visual inspection of the battery terminals for signs of corrosion to ensure that connections are clean and tight are generally considered a routine preventive maintenance activity. Visual inspection of the battery terminals is an important preventive maintenance practice for maintaining a healthy battery (e.g., the early identification and cleaning of battery terminal corrosion can prevent corrosion from spreading between the post and the connector). However, visual inspection of the battery terminals alone does not provide an indication of a battery's capability to perform its design function. Therefore, the NRC staff finds these activities to be preventive maintenance and that the parameters can be adequately controlled in the [new] TS [5.5.17] Battery Monitoring and Maintenance Program.*

In the evaluation for removal of the resistance verification from TS, the NRC stated the following:

> *With regard to the resistance verifications of SR 3.8.4.2 and SR 3.8.4.5, the existing values represent limits at which some action should be taken, not necessarily when the operability of the battery is in question. The plant safety analyses do not assume a specific battery inter-cell connection resistance value, but typically assume that the batteries will supply adequate power. Therefore, the key operability issue is the overall battery connection resistance. Between surveillances, the resistance of each battery inter-cell connection varies independently from all the others. Some of these connection resistance values may be higher or lower than others, and the battery will still be able to perform its function and should not be considered inoperable. Overall connection resistance has a direct impact on operability and is adequately determined by completion of the battery service or modified performance discharge tests. Therefore, these activities are more appropriately controlled under the proposed Battery Monitoring and Maintenance Program and [LICENSEE] provided a justification for the monitoring limit.*

TVA is not proposing to adopt TSTF-500 at this time. However, the above discussion from the NRC evaluation regarding the performance of a battery service or performance discharge test to determine battery operability in lieu of using battery connection resistance readings is applicable to WBN.

Therefore, consistent with the NRC approved TSTF-500, TVA has determined that no new resistance value is required for SR 3.8.4.5, SR 3.8.4.6, SR 3.8.4.9, or SR 3.8.4.10 to establish battery operability, because the battery operability associated with battery resistance is adequately determined by the battery service test or performance discharge test.

NRC RAI 6

TS 3.8.6.3

TS 3.8.6.3 establishes battery operability based on battery cell parameters and average electrolyte temperatures for vital and DG batteries. If the average electrolyte temperature of the representative cells is outside the lower limit (< 60°F for vital batteries and < 50°F for DG batteries), the battery is considered inoperable. The staff requested clarification about the corresponding temperature correction factors that were used for battery sizing criteria in the design calculations. TVA responded that the WBN Unit 2 TSs reflect the same requirements for monitoring and maintaining the batteries that are in the WBN Unit 1 TSs and there are no new requirements imposed on the batteries.

The staff considers the applicant's response to be inadequate and considers this an open item.

TVA Response

TVA procedures 0-SI-236-51, 0-SI-236-52, 0-SI-236-53, and 0-SI-236-54, "125 VDC Vital Battery I [II, III, IV] 60 Month Modified Performance Test and 125 VDC Vital Battery Charger I [II, III, IV] Test," provide the steps to perform a battery performance test for each 125 VDC vital battery. Each test uses the battery discharge unit to discharge the respective vital battery at a 5-hour current rate of 414 amps (corrected for temperature) until battery terminal voltage reaches the minimum design voltage of 105 VDC.

After the average electrolyte temperature is determined, a discharge rate temperature correction factor is applied to determine the discharge rate corrected to 77 ºF, as follows:

414 Amps	÷	(1)	=	(2)	Amps
(5 hour Rated Amps)		(Temperature Correction Factor)		(Corrected Discharge Rate)	

Where (1) is the Correction Factor from the table below, and (2) is the Corrected Discharge Rate from the table below:

Avg. Cell Temp	Correction Factor	Corrected Disch. Rate
60	1.110	373
65	1.080	383
66	1.072	386
67	1.064	389
68	1.056	392
69	1.048	395

Avg. Cell Temp	Correction Factor	Corrected Disch. Rate
78	0.994	416
79	0.987	419
80	0.980	422
81	0.976	424
82	0.972	426
83	0.968	428

Avg. Cell Temp	Correction Factor	Corrected Disch. Rate
70	1.040	398
71	1.034	400
72	1.029	402
73	1.023	405
74	1.017	407
75	1.011	409
76	1.006	412
77	1.000	414

Avg. Cell Temp	Correction Factor	Corrected Disch. Rate
84	0.964	429
85	0.960	431
86	0.956	433
87	0.952	435
88	0.948	437
89	0.944	439
90	0.940	440
95	0.930	445

TVA procedures 0-SI-215-51-A, 0-SI-215-52-B, 0-SI-215-53-A, and 0-SI-215-54-B, "Diesel Generator 1A-A [1B-B, 2A-A, 2B-B] 60 Month Performance Test and Battery Charger Test," provide the steps to perform a battery performance test for each DG battery. Each test uses the battery discharge unit to discharge the respective DG battery at a 4-hour current rate of 48 amps (corrected for temperature) until battery terminal voltage reaches the minimum design voltage of 105 VDC.

After the average electrolyte temperature is determined, a discharge rate temperature correction factor is applied to determine the discharge rate corrected to 77 ºF, as follows:

48 Amps	÷	(1)	=	(2)	Amps
(4 hour Rated Amps)		(Temperature Correction Factor)		(Corrected Discharge Rate)	

Where (1) is the Correction Factor from the table below, and (2) is the Corrected Discharge Rate from the table below:

Avg. Cell Temp	Correction Factor	Corrected Disch. Rate
60	1.110	43
65	1.080	44
66	1.072	45
67	1.064	45
68	1.056	45
69	1.048	46
70	1.040	46
71	1.034	46
72	1.029	47
73	1.023	47
74	1.017	47
75	1.011	47
76	1.006	48
77	1.000	48

Avg. Cell Temp	Correction Factor	Corrected Disch. Rate
78	0.994	48
79	0.987	49
80	0.980	49
81	0.976	49
82	0.972	49
83	0.968	50
84	0.964	50
85	0.960	50
86	0.956	50
87	0.952	50
88	0.948	51
89	0.944	51
90	0.940	51
95	0.930	52

NRC RAI 7

SR 3.8.4.13 and SR 3.8.4.14

SR 3.8.4.13 and SR 3.8.4.14 are associated with verification of the battery capacity tests. The DG batteries are required to start the DGs after a four hour SBO event. The TS basis states that the DG battery has sufficient capacity when fully charged to supply required loads for a minimum of 30 minutes following a loss of normal power. The staff requested clarification on the load profile testing that would be used to determine the operability of the DG battery systems. The TVA response provides details on analytical evaluations performed to demonstrate the adequacy of the DG battery systems and related communications with NRC for WBN2 license application. The applicant's response did not confirm that the DG battery systems will be tested using a four hour SBO load profile to demonstrate compliance with requirements of SR 3.8.4.13 and SR 3.8.4.14.

The staff considers the applicant's response to be inadequate and considers this an open item.

TVA Response

WBN Unit 2 FSAR Section 8.3.1.1, Subheader, "Diesel Generator Control Power," states, in part:

> *The battery has sufficient capacity when fully charged to supply required loads for a minimum of **four hours** following a loss of normal power.* {emphasis added}

Per WBN System Description WB-DC-30-27, "AC and DC Control Power Systems - (Unit 1 / Unit 2)," Section 6.2.1, "Operating Requirements and System Capacity," the vital batteries have adequate capacity for a period of four hours, without chargers, to provide the necessary DC power to maintain both reactors at hot shutdown, assuming the loss of all AC power sources, i.e., station blackout.

TVA procedures 0-SI-215-41-A, 0-SI-215-42-B, 0-SI-215-43-A, and 0-SI-215-44-B, "Diesel Generator 1A-A [1B-B, 2A-A, 2B-B] 18 Month Service Test and Battery Charger Test," provide the steps to perform a battery service test for each DG battery. Each test uses the battery discharge unit to discharge the respective DG battery for 4 hours at the following values:

TIME	AMPERAGE	TERMINAL VOLTAGE
0 to 1 minute	120 Amps	With a minimum voltage of ≥ 105 VDC throughout the service test.
1 to 29 minutes	18 Amps	
29 to 30 minutes	90 Amps	
30 to 239 minutes	17 Amps	
239 to 240 minutes	85 Amps	

TVA procedures 0-SI-215-51-A, 0-SI-215-52-B, 0-SI-215-53-A, and 0-SI-215-54-B, "Diesel Generator 1A-A [1B-B, 2A-A, 2B-B] 60 Month Performance Test and Battery Charger Test," provide the steps to perform a battery performance test for each DG battery. Each test uses the battery discharge unit to discharge the respective DG battery at a 4-hour current rate of 48 amps (corrected for temperature) until battery terminal voltage reaches the minimum design voltage of 105 VDC.

As such, the Background Section of TS Bases 3.8.4 regarding the capacity of the DG batteries is incorrect and is being changed as follows:

> *125 V Diesel Generator (DG) DC Electrical Power Subsystem*
>
> *Control power for the DGs is provided by four DG battery systems, one per DG. Each system is comprised of a battery, a battery charger, distribution center, cabling, and cable ways. The DG 125V DC control power and field-flash circuits have power supplied from their respective 125V distribution panel. The normal supply of DC current is from the associated charger. The battery provides control and field-flash power when the charger is unavailable. The charger supplies the normal DC loads, maintains the battery in a fully charged condition, and recharges (480V AC available) the battery while supplying the required loads regardless of the status of the unit. The batteries are physically and electrically independent. The battery has sufficient capacity when fully charged to supply required loads for a minimum of ~~30 minutes~~ four hours following a loss of normal power. Each battery is normally required to supply loads during the time interval between loss of normal feed to its charger and the receipt of emergency power to the charger from its respective DG.*

References

1. TVA Letter to NRC, "Watts Bar Nuclear Plant Unit 2 – Submittal of Developmental Revision I of the Unit 2 Technical Specification & Technical Specification Bases and Developmental Revision D of the Unit 2 Technical Requirements Manual and Technical Requirements Manual Bases," dated June 16, 2014 [ML14169A525].

2. Email from M. Miernicki (NRC) to G. Arent (TVA), "TS Review Clarification RAIs 10 07 2014," dated October 8, 2014 [ML14286A029].

3. TVA Letter to NRC, "Watts Bar Nuclear Plant Unit 2, Responses to Requests for Additional Information - Developmental Revision I Technical Specification Sections 3.8 and 5.7," dated February 27, 2015 [ML15064A160].

4. Email from R. Schaaf (NRC) to G. Arent (TVA), "Draft of Outstanding Issues on TS Rev I Section 3.8," dated April 27, 2015.

5. Federal Register Notice dated September 1, 2011, "Notice of Availability of Proposed Models for Plant-Specific Adoption of Technical Specifications Task Force Traveler TSTF-500, Revision 2, 'DC Electrical Rewrite - Update to TSTF-360.'" [76 FR 54510]

ATTACHMENT 1

Diesel Generator Critical Trip Testing

Watts Bar Nuclear Plant

Unit 1 & 2

Maintenance Instruction

0-MI-82.003

Two Year Diesel Generator Engine Inspection

Revision 0002

Quality Related

Level of Use: Multiple

Effective Date: 02-02-2015

Responsible Organization: MMG, Mechanical Maintenance

Prepared By: James Boshears

Approved By: Wesley Averette

Revision Log

Revision or Change Number	Effective Date	Affected Page Numbers	Description of Revision/Change
0000	11/18/11	All	Superseded MI-82.003, Revision 33 and converted to Word 2007 by PSE (RDD). Added leading 0 to instruction number. PER 433748 Added MMTP-104 as performance reference. Added Torquing statement to Precautions. Deleted all references to Snug tight.
0001	01/10/13	2,4,7,25, 29,87	PER 588334 Minor Editorial Change: Removed the term snug tight from step 6.8[6] and replaced with wrench tight. PER 498586 added micrometer to tool list, added sub steps to 7.1.2[6], added MI-82.057as a performance reference, added Appendix K.
0002	02/02/15	2,15,25, 31,32	Per feedback removed inappropriate LV sign off from Step 6.8[4]. Performed CV,LV,IV upgrade. Changed Responsible Org from MSM to MMG.

Table of Contents

1.0 INTRODUCTION 4

2.0 REFERENCES 4

3.0 PRECAUTIONS AND LIMITATIONS 5

4.0 PREREQUISITE ACTIONS 6

5.0 ACCEPTANCE CRITERIA 10

6.0 PERFORMANCE 11

7.0 POST PERFORMANCE ACTIVITIES 26

8.0 RECORDS 33

Appendix A: Left Blank 34

Appendix B: Affected Component UNID Listing 35

Appendix C: Diesel Generator Drag Start Test With Air Start Motors Isolated For Engine 1A1 39

Appendix D: Diesel Generator Drag Start Test With Air Start Motors Isolated For Engine 1A2 45

Appendix E: Diesel Generator Drag Start Test With Air Start Motors Isolated For Engine 1B1 51

Appendix F: Diesel Generator Drag Start Test With Air Start Motors Isolated For Engine 1B2 57

Appendix G: Diesel Generator Drag Start Test With Air Start Motors Isolated For Engine 2A1 63

Appendix H: Diesel Generator Drag Start Test With Air Start Motors Isolated For Engine 2A2 69

Appendix I: Diesel Generator Drag Start Test With Air Start Motors Isolated For Engine 2B1 75

Appendix J: Diesel Generator Drag Start Test With Air Start Motors Isolated For Engine 2B2 81

Appendix K: CAMSHAFT OVERSPEED TRIP LINKAGE 87

Source Notes 88

1.0 INTRODUCTION

1.1 Purpose

This Instruction provides steps for 18-24 month inspection and maintenance of Emergency Diesel Generator Engines to assure safe and reliable operation as recommended by EMD Owner's Group (VTD-P318-1280).

1.2 Scope

A. This Instruction may be used for each Emergency Diesel Generator Unit.

B. This Instruction performs inspection of only one engine. Performing an inspection on a complete diesel generator (D/G) unit requires two copies of this Instruction.

C. Engine numbers and affected component numbers are listed in Appendix B.

1.3 Frequency and Conditions

This Instruction is to be performed every 24 months as scheduled by the Preventive Maintenance Scheduling Program.

2.0 REFERENCES

2.1 Performance References

A. SOI-82 Series, System Operating Instruction - Diesel Generator.

B. 0-SI-82 Series, Monthly Diesel Generator Start and Load Test.

C. TI-27 Part III, Cleaning and Cleanness of Fluid Systems and Components.

D. NPG-SPP-18.4.7, Control of Transient Combustibles.

E. MMTP-104, Guidelines and Methodology for Assembling and Tensioning Threaded Connections.

F. MI-82.057, Diesel Generator Overspeed Limit Switch Replacement/Adjustment.

2.2 Developmental References

TI-100.07, Augmented Inservice Testing Program.

2.2.1 Vendor Manuals

A. VTM-P318-0120, Power Systems 4750KW Diesel Generator (D/G).

B. VTM-P318-0070, Power Systems D/G Fuel Oil System.

C. VTM-P318-0010, Power Systems D/G Lube Oil System.

D. VTD-P318-1280, ESI-EMD Owner's Group Recommended Maintenance Program.

2.2.2 Other

N3-82-4002, Standby Diesel Generator System.

3.0 PRECAUTIONS AND LIMITATIONS

A. Performance of this Instruction may require a Combustible Material Storage Permit.

B. Diesel engine rooms, with the exception of Fifth Diesel Room, are protected by a CO_2 fire protection system. Personnel are to be familiar with audible and visual alarms indicating actuation of CO_2 system, and be aware that 20 seconds are provided to exit area before CO_2 discharges.

C. Each diesel room is a high noise level area when diesels are running. Approved hearing protection is required in diesel room while engines are operating.

D. Do not use galvanized containers, fittings, etc. for handling lube oil. Bearings containing silver will be damaged.

E. Rubber gloves should be used when handling kerosene and diesel fuel. Ensure an operable eye wash station is available in the working area.

F. Torquing, unless stated otherwise, is to be achieved using crisscross method and in the following sequence: finger tight, 30%, 60% then 100%. The last pass is to be repeated as necessary until no further rotation of the nut or bolt is observed.

Date _____

3.0 PRECAUTIONS AND LIMITATIONS (continued)

G. For the purpose of this Instruction the term "wrench tight" refers to using "skill of the craft" to tighten a fastener with a hand wrench, etc., to a degree of tightness that is acceptable to the craftsmen with no further verification. Wrench tight in this MI refers to applications excluded from MMTP-104 per Section 2.0.

The term "finger tight" refers to the tightening of a fastener, or a group of fasteners, in such a manner that brings faces together uniformly and ensures that the fastener(s) cannot be loosened by hand. When fastener preload values are required, subsequent torquing will be necessary .per MMTP-104 section 6.4.3[D], before applying the torque.

4.0 PREREQUISITE ACTIONS

4.1 Planner Actions

[1] **ENSURE** parts, listed in Section 4.2, and other parts that may be needed, are available and reserved. ☐

[2] **INCLUDE** copy of Class E cleanliness sheets from TI-27 Part III. ☐

[3] **IF** required by NPG-SPP-18.4.7, **THEN**

INCLUDE in the WID package Transient Combustible Evaluation forms for temporary storage of oil. ☐

[4] **CONTACT** the Mechanical Maint. Manager to evaluate the need for completion of just-in-time training, **AND**

ENSURE appropriate training has been completed prior to performance of this MI.

Training required: ☐ YES ☐ NO

Training completed: ☐ YES ☐ N/A (if **NOT** req'd)

_____/_____
Mech. Maint. Mgr./Designee Date

Date _____

4.2 Special Tools, M&TE, Parts, and Supplies

[1] **ENSURE** the following tools are available as needed:

A. Combination wrench set. ☐

B. Hoses & fittings for aftercooler testing. ☐

C. Scraper. ☐

D. Black light ☐

[2] **ENSURE** the following M&TE is available and within its calibration due date:

DESCRIPTION	MINIMUM RANGE	REQUIRED ACCURACY	√
Digital Tachometer or DG-DAQ	1200 rpm	± 10 rpm	
Manometers or Diff. Gauges (4)	0 to 10" H2O Differential	± 2%	
Outside Micrometer	0 to 1 Inch	± 0.001 Inch	

[3] **RECORD** M&TE number and calibration due date on Work Initiating Document (WID). ☐

NOTE

TIIC numbers and P/N's are for reference only and are subject to change.

[4] **ENSURE** the following parts are available:

4.2 Special Tools, M&TE, Parts, and Supplies (continued)

ITEM NO.	PART NAME	PART NO. (OLD P/N)	TIIC NO.
1	Filter Main lube oil elements	8345482	CDB744T
2	Gasket Main lube oil filter cover	8268756	CDT656A
3	Filter, Aux turbocharger (soakback) oil element	8345482	CDB744T
4	Filter, Turbocharger oil element	8322064	CAW782D
5	O-ring, Turbocharger oil filter check valve	8366436	CAW792A
6	O-ring, Turbo filter check valve	8280352	CAW799V
7	O-ring seal, Turbocharger oil filter housing	8288955	AAT621Y
8	Gasket, Turbo oil filter mounting to camshaft oil manifold	9570677 (8366424)	CAW791C
9	Gasket, Turbo, tube assembly to filter	9570765 (8366345)	CAW804Y
10	Filter, Spin on fuel element	8423132	BYV739Y
11	Gasket, Fuel filter canister	3319541	BPH679M
12	Filter, Canister priming pump fuel element	33182	BRJ672J
13	O-ring, Fuel oil priming strainer, shell to cover	8343161	AAT222D
14	O-ring, Fuel strainer cover to shell	8358905	CAT864M
15	Coupling, AC lube oil circ pump	8274508	CAY653E
16	Spider, AC lube oil circ pump	9312006	ALY973C

Date _____

4.2 Special Tools, M&TE, Parts, and Supplies (continued)

NOTE
TIIC No. and procurement number (575N, etc.) of replaced parts and supplies used are to be recorded on the WID.

[5] **OBTAIN** supplies as listed, **OR**

DETERMINE they are available for use:

A. Lubricant, TVA type LZD-40 (BWF997J). ☐

B. Lubricant, MO-2. ☐

C. Thread lubricant/anti-seize. ☐

D. Herculite/floor covering. ☐

E. Clean, lint-free rags. ☐

4.3 Field Preparations

[1] **WALKDOWN** and **ENSURE** Hold Order (HO) is correctly placed. ☐

[2] **ENSURE** both engines are cooled, depressurized, vented and isolated. ☐

[3] **ENSURE** personnel are aware that D/G unit is in INOP condition and Technical Specifications apply. ☐

4.4 Approvals and Notifications

[1] **ENSURE** SM/US is aware of work to be performed. ☐

5.0 ACCEPTANCE CRITERIA

A. Specific quantitative or qualitative requirements that are intended to be verified by this test are noted in the action steps with (**Acc Crit:**) where the verifying action is performed and recorded.

B. Identified adverse conditions and deficiencies in Instruction acceptance criteria will be documented in Work Initiating Document (WID), a WR will be initiated and System Engineer is to be contacted for tracking D/G unavailability, as soon as practical to repair/replace defective components. WR number should be included in WID.

C. Unless otherwise stated, steps may be worked out of sequence or repeated, provided:

   1. No prerequisite requirements are violated.

   2. No required inspections or verifications are bypassed.

D. Steps which are not applicable may be NA'd with the approval of the Foreman or Responsible Engineer.

Date _____

6.0 PERFORMANCE

GENERAL ENGINE LAYOUT

Figure 6.0

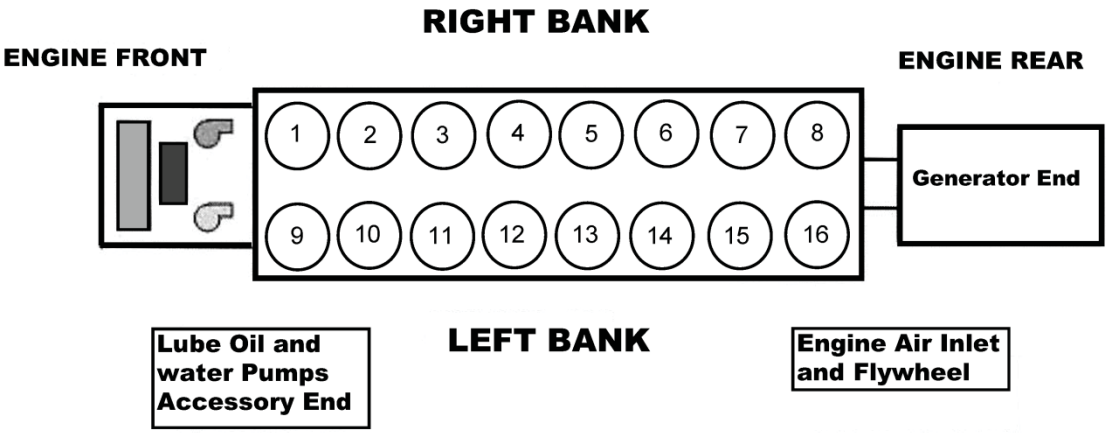

NOTES

1) North engine is right hand rotation and south engine is left hand rotation.
2) Refer to Appendix B for a listing of the affected components worked by this instruction.
3) The term "Finger tight" refers to the tightening of a fastener, or a group of fasteners, in such a manner that brings faces together uniformly and ensures that the fastener(s) cannot be loosened by hand. When fastener preload values are required, subsequent torquing will be necessary.

6.1 General

[1] **ENSURE** precautions and limitations in Section 3.0 have been reviewed.

_____ Initials _____ Date

[2] **ENSURE** prerequisite actions in Section 4.0 have been met.

_____ Initials _____ Date

Date _____

6.1 General (continued)

[3] **IDENTIFY** and **VERIFY** proper D/G engine UNID, to be serviced, as specified on the WID.

_____	_____
Initials	Date
_____	_____
CV	Date

[4] **RECORD** indicated time shown on D/G hour meter mounted in control cabinet:

Indicated hour meter time: _____hr.

_____	_____
Initials	Date

CAUTION

Do not use galvanized containers, fittings, etc. for pumping or storing oil.

[5] **VERIFY** Class E cleanliness of containers and equipment used for oil, **AND**

DOCUMENT on TI-27 Part III cleanliness data sheet. ☐

Date _____

6.2 Main Lube Oil Filter Element Replacement

NOTE

Main lube oil filter is illustrated in Figure 6-1A.

[1] **REMOVE** square cover from engine mounted lube oil strainer housing (Figure 6-1B). ☐

[2] **RAISE** and **LATCH** gate valve handles in the engine strainer housing, **AND**

ALLOW time to drain oil from main lube oil filter housing and oil strainer into engine sump. ☐

MAIN LUBE OIL FILTER

Figure 6-1A

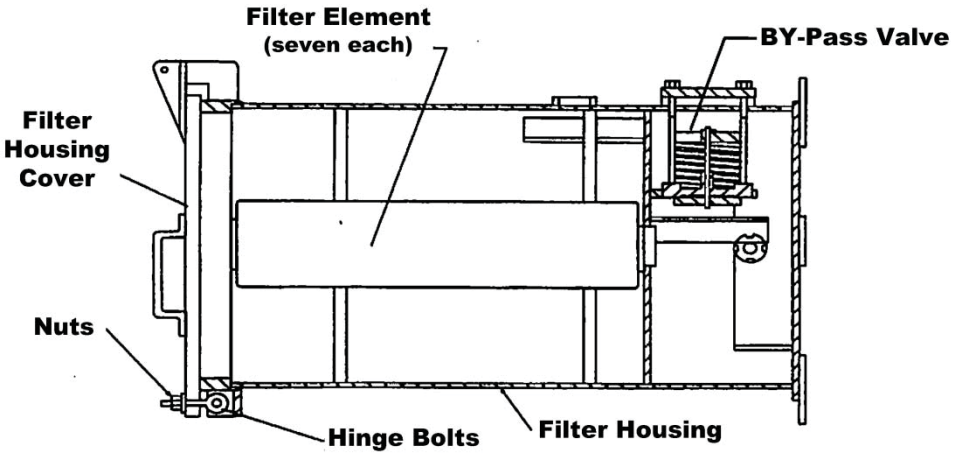

[3] **LOOSEN** nuts on main lube oil filter housing cover allowing remaining oil to leak into drain trough. ☐

[4] **SWING** hinge bolts clear of housing cover. ☐

[5] **OPEN** filter housing cover. ☐

[6] **REMOVE** each of the seven used filter elements,

[7] **CONTACT** System Engineer for inspection and evaluation of filter element(s) condition, **AND**

PLACE into double bagged trash bags for disposal. ☐

Date _____

6.2 Main Lube Oil Filter Element Replacement (continued)

LUBE OIL STRAINER

Figure 6-1B

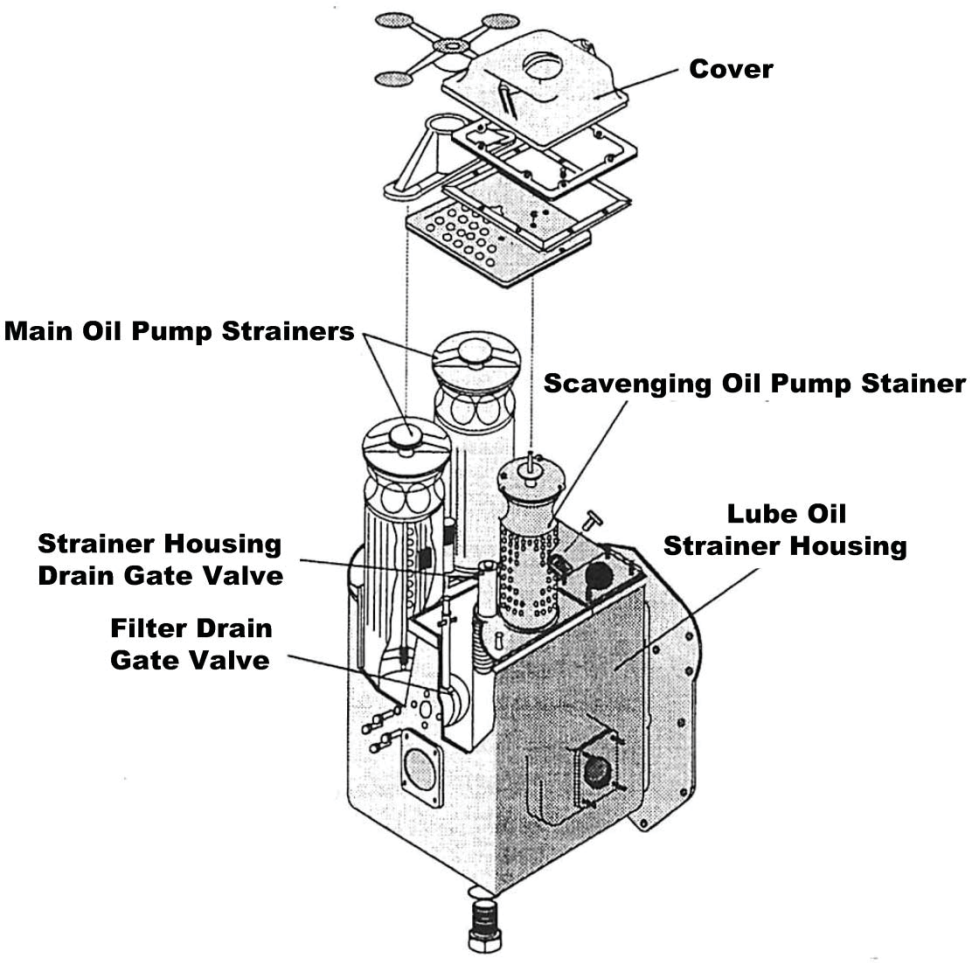

[8] **CLEAN** filter housing, as needed, with clean rags and approved solvent, **AND**

INSPECT housing to Class E cleanliness criteria, **THEN**

DOCUMENT on TI-27, Part III cleanliness data sheet. ☐

[9] **INSTALL** seven new filter elements. ☐

[10] **ENSURE** filter elements are fully seated over standpipes. ☐

[11] **INSPECT** filter housing cover gasket. ☐

Date _____

6.2 Main Lube Oil Filter Element Replacement (continued)

[12] **IF** gasket is unacceptable, **THEN**

REPLACE gasket. ☐

[13] **ENSURE** guide hole in filter housing cover mates with dowel on the filter housing, **AND**

CLOSE cover. ☐

[14] **SWING** hinge bolts into place, **THEN**

TORQUE nuts to 60 ft-lbs, **AND**

RECORD M&TE ID No.:_____.

_____	_____
Initials	Date
_____	_____
LV	Date

[15] **CLOSE** filter drain gate valve at lube oil strainer.

_____	_____
Initials	Date
_____	_____
IV	Date

[16] **DOCUMENT** completion of this section.

_____	_____
Initials	Date

Date _____

6.3 Auxiliary Turbocharger (Soakback) Oil Filter Replacement

[1] **LOOSEN** two flange nuts holding cover to filter housing. ☐

SOAKBACK OIL FILTER

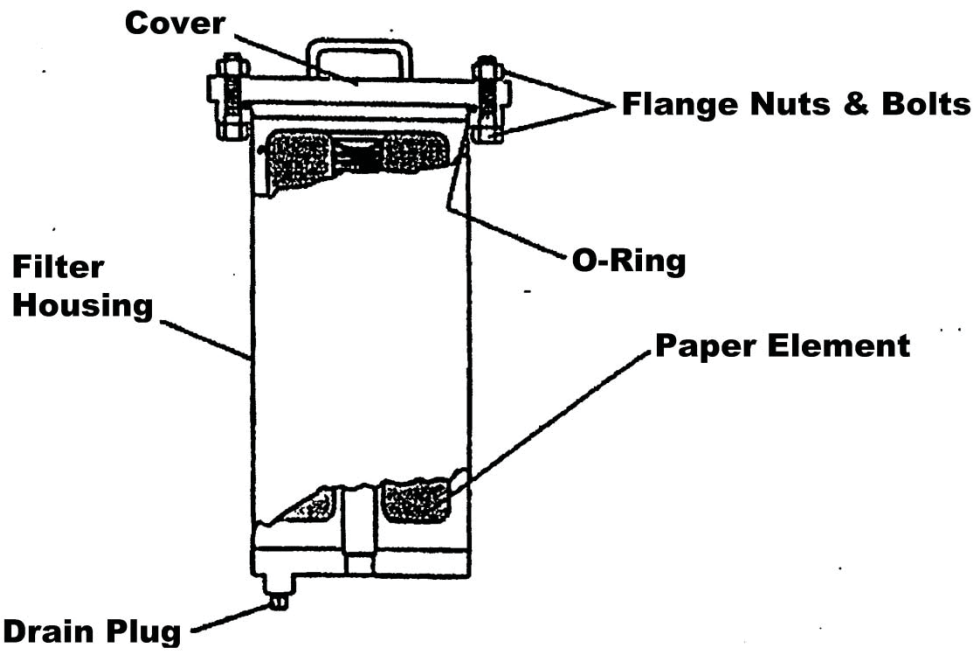

Figure 6-2

[2] **ROTATE** cover counterclockwise, **AND**

LIFT cover off of container. ☐

[3] **REMOVE** used filter element. ☐

[4] **REMOVE** drain plug if accessible and drain oil, **THEN**

VACUUM oil from canister if plug is **NOT** removed. ☐

[5] **CONTACT** Responsible Engineer for inspection and evaluation of filter element(s) condition, **AND**

PLACE into double bagged trash bags for disposal. ☐

Date _____

6.3 Auxiliary Turbocharger (Soakback) Oil Filter Replacement (continued)

[6] **CLEAN** filter housing, as needed, with approved solvent and lint free rags. ☐

[7] **VERIFY** Class E cleanliness, **AND**

DOCUMENT on TI-27 Part III cleanliness data sheet. ☐

[8] **INSTALL** drain plug if removed. ☐

[9] **INSTALL** new paper element and cover O-ring. ☐

[10] **INSTALL** cover assembly, **AND**

TIGHTEN nuts Wrench tight. ☐

[11] **DOCUMENT** completion of this section.

Initials	Date
_____	_____

Date _____

6.4 Turbocharger Oil Filter Replacement

[1] **LOOSEN** two flange bolts and nuts, **AND**

ROTATE container to disengage from upper housing. ☐

[2] **REMOVE** used filter element, **THEN**

CONTACT System Engineer for inspection and evaluation of filter element condition, **AND**

PLACE into double bagged trash bags for disposal. ☐

TURBOCHARGER OIL FILTER

Figure 6-3

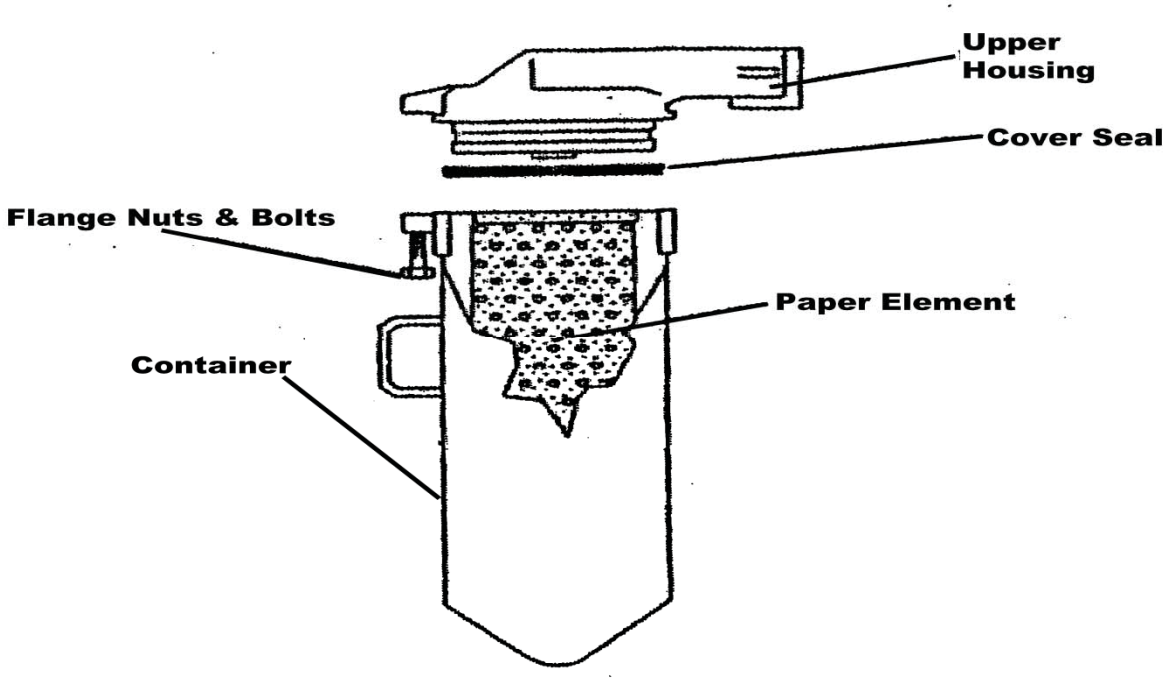

[3] **CLEAN** filter housing, as needed, with approved solvent and lint free rags. ☐

[4] **INSTALL** new paper element. ☐

Date _____

6.4 Turbocharger Oil Filter Replacement (continued)

[5] **REPLACE** check valve O-rings, **THEN**

INSPECT both filter check valves inside housing, **AND**

ENSURE proper operation by freedom of movement check. ☐

[6] **FILL** container with TVA LZD-40 oil. ☐

[7] **INSTALL** new cover seal, **AND**

POSITION container in upper housing. ☐

[8] **VERIFY** Class E cleanliness, **AND**

DOCUMENT on TI-27 Part III cleanliness data sheet. ☐

[9] **TIGHTEN** flange bolts and nuts wrench tight. ☐

[10] **DOCUMENT** completion of this section.

Initials	Date
_____	_____

6.5 Fuel Filter Replacement

6.5.1 Engine Driven Spin-On Filter Replacement

NOTE
Both fuel filter elements may be removed and changed simultaneously.

[1] **UNSCREW** twin spin-on fuel filter elements, and **PLACE** into double bagged trash bags for disposal, **THEN**

DISPOSE of fuel oil into waste oil drum.

Element	
☐	☐
#1	#2

[2] **CLEAN** filter housing mount, as needed, with approved solvent and lint free rags. ☐

[3] **VERIFY** class E cleanliness and **DOCUMENT** on TI-27 Part III cleanliness data sheet. ☐

Date _____

6.5.1 Engine Driven Spin-On Filter Replacement (continued)

NOTE
Filter element should be tightened by hand until gasket contacts filter body and then turned an additional one-half turn.

[4] **APPLY** a thin film of fuel oil to gasket, **AND**

FILL filters with diesel fuel, **THEN**

INSTALL new filter oil elements on filter housing.

Element

☐ ☐
#1 #2

6.5.2 Motor Driven Canister-type Fuel Oil Filter Element Replacement

Figure 6-4

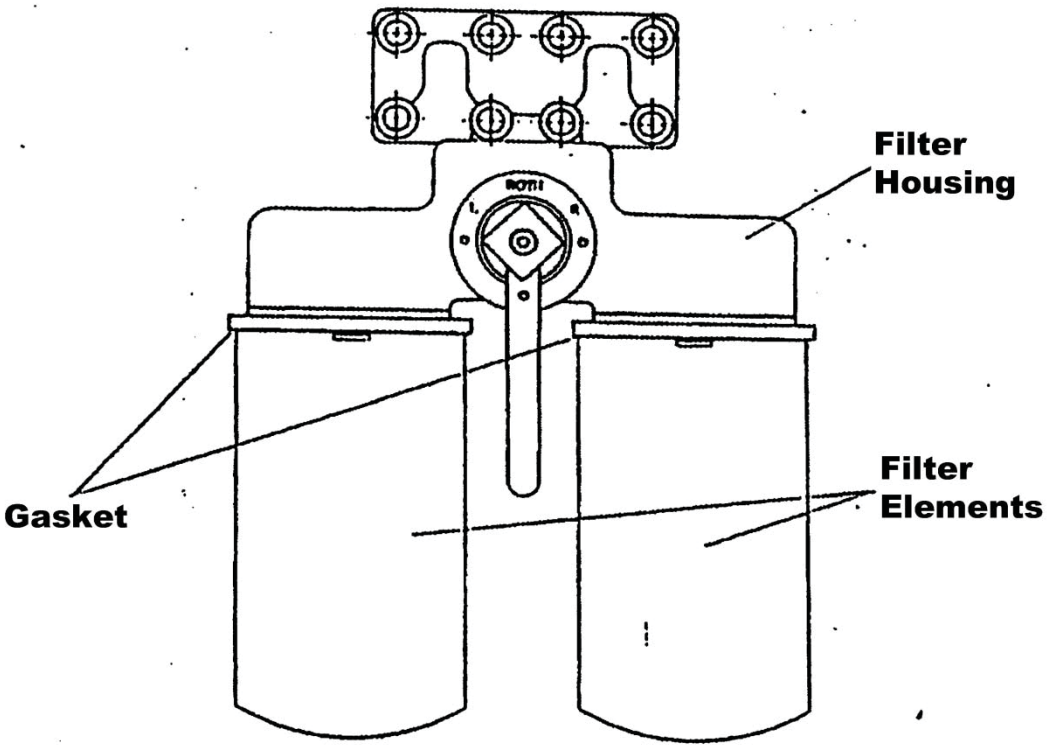

Date _____

6.5.2 Motor Driven Canister-type Fuel Oil Filter Element Replacement (continued)

NOTE

Both fuel filter elements may be removed and changed simultaneously.

		Element
[1]	**LOOSEN** and **REMOVE** filter housing.	☐ #1 ☐ #2
[2]	**REMOVE** housing with filter element from filter head.	☐ #1 ☐ #2
[3]	**REMOVE** used filter element, **AND**	
	DISPOSE of used filter.	☐ #1 ☐ #2
[4]	**CLEAN** filter housing, as needed, with approved solvent and lint free rags.	☐ #1 ☐ #2
[5]	**VERIFY** class E cleanliness, **AND**	
	DOCUMENT on TI-27 Part III cleanliness data sheet.	☐
[6]	**INSTALL** new O-ring into housing.	☐ #1 ☐ #2
[7]	**INSTALL** new filter element after filling with clean fuel oil.	☐ #1 ☐ #2
[8]	**INSTALL** housing to filter head with retaining nuts, **AND**	
	TIGHTEN retaining nuts wrench tight.	☐ #1 ☐ #2
[9]	**DOCUMENT** completion of this section.	

_____/_____
Date

Date _____

6.6 Fuel Oil Suction Strainer Cleaning

NOTES

1) Fuel oil suction strainers are illustrated in Figure 6-5.
2) Both fuel filter elements may be removed and changed simultaneously.

[1] **REMOVE** shell from cover.

DC MOTOR PRIMING PUMP STRAINER A ☐
ENGINE DRIVEN PUMP STRAINER B ☐

[2] **REMOVE** mesh strainer element from shell, **AND**

DISCARD sediment into waste oil container.

DC MOTOR PRIMING PUMP STRAINER A ☐
ENGINE DRIVEN PUMP STRAINER B ☐

[3] **CLEAN** mesh element, as needed, with approved solvent and lint free rags, **AND**

VERIFY class E cleanliness. ☐

[4] **DOCUMENT** on TI-27 Part III cleanliness data sheet, **OR**

OBTAIN and **REPLACE** new mesh element as required REPLACED

A. DC Motor Priming Pump Strainer Element Yes ☐ No ☐

B. Engine Driven Pump Strainer Element Yes ☐ No ☐

[5] **CLEAN** filter shell thoroughly with approved solvent, **AND**

WIPE clean with lint free rags, as needed.

DC MOTOR PRIMING PUMP STRAINER A ☐
ENGINE DRIVEN PUMP STRAINER B ☐

[6] **VERIFY** class E cleanliness, **AND**

DOCUMENT on TI-27 Part III cleanliness data sheet. ☐

Date _____

6.6 Fuel Oil Suction Strainer Cleaning (continued)

FUEL OIL SUCTION STRAINER

Figure 6-5

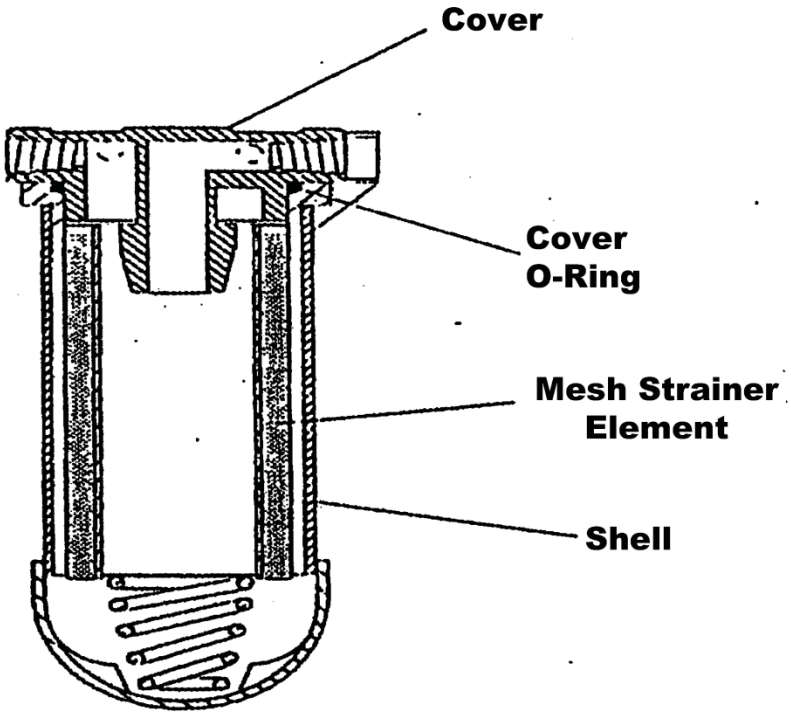

[7] **INSPECT** cover O-rings visually for nicks or damage.

DC MOTOR PRIMING PUMP STRAINER A ☐
ENGINE DRIVEN PUMP STRAINER B ☐

[8] **IF** cover O-rings are defective, **THEN**

REPLACE O-rings as required.

DC MOTOR PRIMING PUMP STRAINER A ☐
ENGINE DRIVEN PUMP STRAINER B ☐

Date _____

6.6 Fuel Oil Suction Strainer Cleaning (continued)

[9] **INSERT** cleaned or new strainer elements in shell, **AND**

FILL shell with diesel fuel.

DC MOTOR PRIMING PUMP STRAINER A ☐
ENGINE DRIVEN PUMP STRAINER B ☐

[10] **ATTACH** shell to strainer cover.

DC MOTOR PRIMING PUMP STRAINER A ☐
ENGINE DRIVEN PUMP STRAINER B ☐

[11] **ENSURE** O-ring is properly seated, **AND**

TIGHTEN shell wrench tight.

DC MOTOR PRIMING PUMP STRAINER A ☐
ENGINE DRIVEN PUMP STRAINER B ☐

[12] **DOCUMENT** completion of this section.

Initials _____ Date _____

6.7 Intake Air Filter Inspection

[1] **REMOVE** reservoir cover. ☐

[2] **INSPECT** oil with use of light to identify any foreign material. ☐

[3] **INSPECT** accessible area for defects. ☐

[4] **FILL** reservoir housing with MO-2 oil to indicator on sight glass, **AND**

VERIFY proper level reached in bullseye sight glass.

Initials _____ Date _____

[5] **INSTALL** reservoir cover. ☐

[6] **DOCUMENT** completion of this section.

Initials _____ Date _____

Date _____

6.8 Six GPM AC Lube Oil Circulation Pump Inspection[1]

[1] **REMOVE** coupling cover, **AND**

INSPECT coupling spider for wear and damage. ☐

[2] **IF** coupling maintenance is required, **THEN**

REPLACE spider or coupling. ☐

NOTE

Axial reading is the clearance between the pump and motor coupling halves. The pump and motor need to be bolted in place and the motor armature pulled toward the pump shaft, to its furthest position, before actual reading is taken. All valves and piping should be installed before performing pump to motor alignment.

[3] **CHECK** axial clearance between coupling halves with shafts in closest position, **AND**

SET at 1/16 to 1/8 in. ☐

[4] **CHECK** parallel alignment, at 90° intervals, **AND**
ADJUST until the readings are within 0.002 in., **THEN**

CHECK angular alignment, at 90° intervals, **AND**
ADJUST until the readings are within 0.002 in.

_____ Initials _____ Date

[5] **INSPECT** for pump seal leakage. ☐

[6] **INSTALL** coupling cover wrench tight with bolting. ☐

[7] **DOCUMENT** completion of this section.

_____ Initials _____ Date

Date _____

7.0 POST PERFORMANCE ACTIVITIES

7.1 Testing

7.1.1 Prestart Check

[1] **REQUEST** Operations to trip AC auxiliary lube oil pump breaker, **AND**

VERIFY operation of DC auxiliary lube oil pump with **(Acc Crit:)** greater than 10 psig is indicated on lube oil header pressure gauge.

_____ Initials _____ Date

[2] **CHECK** engine oil sump level, **AND**

ADD LZD-40 oil to strainer housing as needed to bring level to approximately 1" above full mark on dipstick. ☐

[3] **CHECK** oil level in strainer housing, **AND**

ADD LZD-40 oil as required until oil overflows the internal dams. ☐

[4] **REQUEST** Operations to CLOSE breaker for AC auxiliary lube oil pump, **AND**

VERIFY operation of AC pump and trip of back-up DC pump with **(Acc Crit:)** greater than 10 psig is indicated on lube oil header pressure gauge.

_____ Initials _____ Date

[5] **REQUEST** Operations to start fuel oil priming pump, **AND**

VERIFY no external leaks.

_____ Initials _____ Date

Date _____

7.1.1 Prestart Check (continued)

[6] **PERFORM** top deck inspection for fuel oil leaks with the fuel oil priming pump running. Black light may be used.

_____ Initials _____ Date

[7] **ENSURE** lube oil is **NOT** detected coming from the camshaft bearings with the turbocharger AC auxiliary lube oil circulating pump running. ☐

[8] **ENSURE** top deck covers are closed. ☐

7.1.2 Diesel Generator Drag Start, Overspeed Trip Test & Aftercooler Differential Pressure Testing

[1] **PERFORM** the appropriate APPENDIX for the engine being inspected:

APPENDIX C: 1-DIEG-82-A1	APPENDIX G: 2-DIEG-82-A1
APPENDIX D: 1-DIEG-82-A2	APPENDIX H: 2-DIEG-82-A2
APPENDIX E: 1-DIEG-82-B1	APPENDIX I: 2-DIEG-82-B1
APPENDIX F: 1-DIEG-82-B2	APPENDIX J: 2-DIEG-82-B2

[2] **DOCUMENT** Appendix performed.

Appendix_____

_____ Initials _____ Date

[3] **ENSURE** overspeed trip mechanism of opposite engine is held in LATCHED position. ☐

Date _____

7.1.2 Diesel Generator Drag Start, Overspeed Trip Test & Aftercooler Differential Pressure Testing (continued)

CAUTION

Diesel engine should not be run above 1100 rpm to avoid possible engine damage.

NOTE

Communication must be established between individual controlling the fuel rack (performer of overspeed trip test) and individual monitoring the engine rpm.

[4] **DESIGNATE** someone to **MONITOR** engine rpm on the control panel and to **SIGNAL** performer if engine speed exceeds 1100 rpm.[4] ☐

[5] **OBSERVE** engine speed with digital tachometer or DG-DAQ, **AND**

INCREASE speed of diesel engine manually with fuel injection linkage UNTIL engine trips, **THEN**

RECORD speed of engine at time of trip.
Setpoint: 1040 rpm **(Acc Crit:** 1035 to 1050 rpm)
(**N/A** engine **NOT** tested).

A. Engine 1 (South) Speed at Trip (as-found)_____rpm

B. Engine 2 (North) Speed at Trip (as-found)_____rpm

C. M&TE ID No: _____

_____	_____
Initials	Date
_____	_____
CV	Date

Date _____

7.1.2 Diesel Generator Drag Start, Overspeed Trip Test & Aftercooler Differential Pressure Testing (continued)

[6] **IF** engine tripped at desired rpm setting, **THEN**

[6.1] **ENSURE** a minimum of 1/4 inch overtravel of limit switch lever arm as follows (See Appendix K for information):

A. **PUSH** the limit switch lever arm in the trip direction UNTIL resistance is met. _____

B. **MEASURE** the overtravel. _____

C. **IF** 1/4 inch overtravel is not met, **THEN**

PERFORM adjustment using MI-82.057 (Will require a Minor Maintenance WO). _____

[6.2] **RESET** the mechanical overspeed lever, **AND**

VERIFY the limit switch resets and the overspeed trip annunciation on the Diesel Engine Control Panel reset. _____

[6.3] **VERIFY** the Unit Lockout annunciators on the Diesel Engine control panel are LIT, **AND**

RESET annunciators using Reset and Unit Lockout Reset pushbutton. _____

[6.4] **RESET** the overspeed trip annunciation on 0-M-26 using Reset pushbutton. _____

[6.5] **MANUALLY** RAISE and LOWER the engine overspeed trip lever up and down by hand, **AND**

VERIFY the Overspeed Trip and Unit Lockout annunciators on the Diesel Engine control panel do NOT alarm. _____

Date _____

7.1.2 Diesel Generator Drag Start, Overspeed Trip Test & Aftercooler Differential Pressure Testing (continued)

NOTES

1) Loosening trip spring pressure will decrease trip speed.
2) Several adjustments may be required to reach acceptable trip speed.

[7] **IF** engine did **NOT** trip at acceptable rpm, **THEN**

PERFORM overspeed trip adjustment as follows:

A. **ENSURE** diesel engine has reached FULL STOP. ☐

B. **REMOVE** right cover from overspeed trip housing, **AND**

ADJUST overspeed mechanism to desired setting. ☐

C. **INSPECT** cover gasket for damage, **AND**

REPLACE gasket as necessary. ☐

D. **INSTALL** cover and gasket with bolting wrench tight. ☐

[8] **REQUEST** OPS to START engine, **AND**

REPEAT Steps 7.1.2[3] through 7.1.2[7] as required. ☐

[9] **WHEN** engine trips at desired rpm setpoint, **THEN**

RECORD speed of engine at time of trip.

North Engine Speed at Trip (as-left)_____rpm

_____ Initials _____ Date

South Engine Speed at Trip (as-left)_____rpm

_____ Initials _____ Date

Date _____

7.1.2 Diesel Generator Drag Start, Overspeed Trip Test & Aftercooler Differential Pressure Testing (continued)

[10] **TORQUE** overspeed cover bolting in crisscross pattern, **AND**

VERIFY bolting is torqued to 30 ft-lbs, **THEN**

RECORD M&TE ID No.:_____

_____	_____
Initials	Date
_____	_____
LV	Date

CAUTION

Engine should not be running in excess of idle speed (450 rpm) while installing differential pressure instrument into ductwork.

[11] **LOOSEN** and **REMOVE** a bolt at direction of Test Director (fifth is preferred) from top on each side of each (2) aftercooler unit on engine. ☐

NOTE

The Low pressure side of aftercooler is the side nearest the engine. Other side is HIGH pressure side.

[12] **INSTALL** differential pressure instruments into both sides of left aftercooler through housing bolt holes removed in previous step. ☐

[13] **INSTALL** differential pressure instruments into both sides of right aftercooler through housing bolt holes removed in Step 7.1.2[11]. ☐

[14] **VERIFY** DG is at operating speed (900 rpm). ☐

Date _____

7.1.2 Diesel Generator Drag Start, Overspeed Trip Test & Aftercooler Differential Pressure Testing (continued)

[15] **RECORD** differential pressure across aftercoolers, **AND**

ENSURE differential pressure across each aftercooler is less than or equal to **(Acc Crit:)** 10 in. H_2O:

A. Left Aftercooler Differential Press: _____in. H_2O.

B. Right Aftercooler Differential Press: _____in. H_2O.

M&TE ID No. A. _____

B. _____

_____ Initials _____ Date

[16] **CHECK** lube oil pumps and piping where disassembled to identify any leaks.

_____ Initials _____ Date

[17] **CHECK** all filters and strainers where disassembled to identify any leaks.

_____ Initials _____ Date

[18] **REQUEST** Operations to shutdown diesel generator unit. ☐

[19] **REMOVE** differential pressure instruments, **AND**

INSTALL and **TORQUE** aftercooler housing bolting to 45 ft-lbs, **AND**

RECORD M&TE ID No._____

_____ Initials _____ Date

_____ LV _____ Date

Date _____

7.2 Restoration

[1] **ENSURE** tools and materials are removed and work area is clean.

_____ Initials _____ Date

[2] **VERIFY** satisfactory completion of post performance activities

_____ Initials _____ Date

[3] **REQUEST** Operations to realign diesel generator system for normal standby mode.

_____ Initials _____ Date

8.0 RECORDS

8.1 QA Records

The Data Package is a QA record, is handled in accordance with the Document Control and Records Management Program, and contains the following:

A. Completed parts of Sections 4.0, 6.0 and 7.0.

B. Material Procurement Documents.

C. Other sheets added during the performance.

8.2 Non-QA Records

None

Appendix A
(Page 1 of 1)

Left Blank

This page left blank to maintain numbering of Appendixes C thru J that are referenced in 0-MI-82.005, 0-MI-82.006 & 0-MI-82.078.

Appendix B
(Page 1 of 4)

Affected Component UNID Listing

GENERATOR 1A-A

1-GEN-082-0001A	DIESEL GENERATOR 1A-A
1-DIEG-082-A1	DIESEL GENERATOR ENGINE 1A1
1-DIEG-082-A2	DIESEL GENERATOR ENGINE 1A2
1-FLTR-082-0706A1	ENG 1A1 LUBE OIL FILTER
1-FLTR-082-0706A2	ENG 1A2 LUBE OIL FILTER
1-FLTR-082-0709A1	ENG 1A1 TURBO LUBE OIL FILTER
1-FLTR-082-0709A2	ENG 1A2 TURBO LUBE OIL FILTER
1-FLTR-082-0710A1	ENG 1A1 TURBO SOAKBACK OIL FILTER
1-FLTR-082-0710A2	ENG 1A2 TURBO SOAKBACK OIL FILTER
1-FLTR-018-0066/1A	ENG 1A1 ENGINE DRIVEN FUEL PUMP FILTER
1-FLTR-018-0081/1A	ENG 1A2 ENGINE DRIVEN FUEL PUMP FILTER
1-FLTR-018-0066/1B	ENG 1A1 MOTOR DRIVEN FUEL PUMP FILTER
1-FLTR-018-0081/1B	ENG 1A2 MOTOR DRIVEN FUEL PUMP FILTER
1-STN-018-0029/1	ENG 1A1 FUEL OIL PRIMING PUMP STRAINER
1-STN-018-0059/1	ENG 1A2 FUEL OIL PRIMING PUMP STRAINER
1-STN-018-0065/1	ENG 1A1 FUEL OIL PUMP STRAINER
1-STN-018-0080/1	ENG 1A2 FUEL OIL PUMP STRAINER
1-IACL-082-0101	ENG 1A1 INTAKE AIR CLEANER
1-IACL-082-0102	ENG 1A2 INTAKE AIR CLEANER
1-PMP-082-A1	ENG 1A1 LUBE OIL CIRC PUMP
1-PMP-082-A2	ENG 1A2 LUBE OIL CIRC PUMP

Appendix B
(Page 2 of 4)

Affected Component UNID Listing

GENERATOR 1B-B

1-GEN-082-0001B	DIESEL GENERATOR 1B-B
1-DIEG-082-B1	DIESEL GENERATOR ENGINE 1B1
1-DIEG-082-B2	DIESEL GENERATOR ENGINE 1B2
1-FLTR-082-0706B1	ENG 1B1 LUBE OIL FILTER
1-FLTR-082-0706B2	ENG 1B2 LUBE OIL FILTER
1-FLTR-082-0709B1	ENG 1B1 TURBO LUBE OIL FILTER
1-FLTR-082-0709B2	ENG 1B2 TURBO LUBE OIL FILTER
1-FLTR-082-0710B1	ENG 1B1 TURBO SOAKBACK OIL FILTER
1-FLTR-082-0710B2	ENG 1B2 TURBO SOAKBACK OIL FILTER
1-FLTR-018-0066/2A	ENG 1B1 ENGINE DRIVEN FUEL PUMP FILTER
1-FLTR-018-0081/2A	ENG 1B2 ENGINE DRIVEN FUEL PUMP FILTER
1-FLTR-018-0066/2B	ENG 1B1 MOTOR DRIVEN FUEL PUMP FILTER
1-FLTR-018-0081/2B	ENG 1B2 MOTOR DRIVEN FUEL PUMP FILTER
1-STN-018-0029/2	ENG 1B1 FUEL OIL PRIMING PUMP STRAINER
1-STN-018-0059/2	ENG 1B2 FUEL OIL PRIMING PUMP STRAINER
1-STN-018-0065/2	ENG 1B1 FUEL OIL PUMP STRAINER
1-STN-018-0080/2	ENG 1B2 FUEL OIL PUMP STRAINER
1-IACL-082-0103	ENG 1B1 INTAKE AIR CLEANER
1-IACL-082-0104	ENG 1B2 INTAKE AIR CLEANER
1-PMP-082-B1	ENG 1B1 LUBE OIL CIRC PUMP
1-PMP-082-B2	ENG 1B2 LUBE OIL CIRC PUMP

Appendix B
(Page 3 of 4)

Affected Component UNID Listing

GENERATOR 2A-A

2-GEN-082-0001A	DIESEL GENERATOR 2A-A
2-DIEG-082-A1	DIESEL GENERATOR ENGINE 2A1
2-DIEG-082-A2	DIESEL GENERATOR ENGINE 2A2
2-FLTR-082-0706A1	ENG 2A1 LUBE OIL FILTER
2-FLTR-082-0706A2	ENG 2A2 LUBE OIL FILTER
2-FLTR-082-0709A1	ENG 2A1 TURBO LUBE OIL FILTER
2-FLTR-082-0709A2	ENG 2A2 TURBO LUBE OIL FILTER
2-FLTR-082-0710A1	ENG 2A1 TURBO SOAKBACK OIL FILTER
2-FLTR-082-0710A2	ENG 2A2 TURBO SOAKBACK OIL FILTER
2-FLTR-018-0066/3A	ENG 2A1 ENGINE DRIVEN FUEL PUMP FILTER
2-FLTR-018-0081/3A	ENG 2A2 ENGINE DRIVEN FUEL PUMP FILTER
2-FLTR-018-0066/3B	ENG 2A1 MOTOR DRIVEN FUEL PUMP FILTER
2-FLTR-018-0081/3B	ENG 2A2 MOTOR DRIVEN FUEL PUMP FILTER
2-STN-018-0029/3	ENG 2A1 FUEL OIL PRIMIMG PUMP STRAINER
2-STN-018-0059/3	ENG 2A2 FUEL OIL PRIMIMG PUMP STRAINER
2-STN-018-0065/3	ENG 2A1 FUEL OIL PUMP STRAINER
2-STN-018-0080/3	ENG 2A2 FUEL OIL PUMP STRAINER
2-IACL-082-0201	ENG 2A1 INTAKE AIR CLEANER
2-IACL-082-0202	ENG 2A2 INTAKE AIR CLEANER
2-PMP-082-A1	ENG 2A1 LUBE OIL CIRC PUMP
2-PMP-082-A2	ENG 2A2 LUBE OIL CIRC PUMP

Appendix B
(Page 4 of 4)

Affected Component UNID Listing

GENERATOR 2B-B

2-GEN-082-0001B	DIESEL GENERATOR 2B-B
2-DIEG-082-B1	DIESEL GENERATOR ENGINE 2B1
2-DIEG-082-B2	DIESEL GENERATOR ENGINE 2B2
2-FLTR-082-0706B1	ENG 2B1 LUBE OIL FILTER
2-FLTR-082-0706B2	ENG 2B2 LUBE OIL FILTER
2-FLTR-082-0709B1	ENG 2B1 TURBO LUBE OIL FILTER
2-FLTR-082-0709B2	ENG 2B2 TURBO LUBE OIL FILTER
2-FLTR-082-0710B1	ENG 2B1 TURBO SOAKBACK OIL FILTER
2-FLTR-082-0710B2	ENG 2B2 TURBO SOAKBACK OIL FILTER
2-FLTR-018-0066/4A	ENG 2B1 ENGINE DRIVEN FUEL PUMP FILTER
2-FLTR-018-0081/4A	ENG 2B2 ENGINE DRIVEN FUEL PUMP FILTER
2-FLTR-018-0066/4B	ENG 2B1 MOTOR DRIVEN FUEL PUMP FILTER
2-FLTR-018-0081/4B	ENG 2B2 MOTOR DRIVEN FUEL PUMP FILTER
2-STN-018-0029/4	ENG 2B1 FUEL OIL PRIMING PUMP STRAINER
2-STN-018-0059/4	ENG 2B2 FUEL OIL PRIMING PUMP STRAINER
2-STN-018-0065/4	ENG 2B1 FUEL OIL PUMP STRAINER
2-STN-018-0080/4	ENG 2B2 FUEL OIL PUMP STRAINER
2-IACL-082-0203	ENG 2B1 INTAKE AIR CLEANER
2-IACL-082-0204	ENG 2B2 INTAKE AIR CLEANER
2-PMP-082-B1	ENG 2B1 LUBE OIL CIRC PUMP
2-PMP-082-B2	ENG 2B2 LUBE OIL CIRC PUMP

Appendix C
(Page 1 of 6)

Diesel Generator Drag Start Test With Air Start Motors Isolated For Engine 1A1

Date _____

1.0 DG DRAG START TEST

Perform this Appendix when inspecting Engine 1A1 to isolate Engine 1A1 starting air system to allow starting both engines with Engine 1A2 air start motors and verifying voltage and frequency of generator..

ACCEPTANCE CRITERIA: Diesel generator started with one engine's air start motors (4) isolated and achieved voltage ≥ 6800V and frequency ≥ 58.8 Hz in ≤ 10 seconds.

Test Equipment Setup

NOTES

1) Install equipment for testing engine overspeed trip device and aftercooler assembly as required.
2) The DG-DAQ is installed at the DG Protection Panel.
3) The System Engineer may assist in DG-DAQ setup.

[1] **CONFIGURE** PK test blocks for TB1**-** All jumpers INSTALLED and all thumb nuts WRENCH TIGHT. _____

NOTE

Black is positive and white is negative.

[2] **CONNECT** DG-DAQ Channel 0 black wire to Terminal 2 of the PK test block for TB1 and the white wire to Terminal 4 of the PK test block for TB1, **AND**

INSERT PK test block into TB1. _____

NOTE

The current probe should be zeroed prior to connecting to the ES1AY relay.

[3] **ZERO** the current probe indication. _____

[4] **PUT** Start signal into DG-DAQ Channel 2, using clamp-on probe around coil wire 11 or 12 of relay ES1AY. _____

Appendix C
(Page 2 of 6)

Diesel Generator Drag Start Test With Air Start Motors Isolated For Engine 1A1

Date _____

1.0 DG DRAG START TEST (continued)

[5] **TURN ON** the DG-DAQ. _____

[6] **TURN ON** the SCXI box. _____

[7] **SETUP** DG-DAQ Channel 0 for an input of +212 to -212 V dc and multiplication factor of 60.0 _____

_____
CV

[8] **SETUP** DG-DAQ Channel 2 for an input of +0.1 to -0.1 V dc and multiplication factor of 1.0 _____

_____
CV

CAUTION

If the valves in the Table 1A1 are not configured in the order given, an alarm initiation is possible.

[9] **IMPLEMENT** configuration changes in TABLE 1A1 in the sequence listed (top-to-bottom), **AND**

DOCUMENT performance. _____

Appendix C
(Page 3 of 6)

Diesel Generator Drag Start Test With Air Start Motors Isolated For Engine 1A1

Date _____

1.0 DG DRAG START TEST (continued)

TABLE 1A1

		VERIFICATIONS			
		CONFIGURATION CHANGE		RETURN TO NORMAL	
AFFECTED COMPONENT	CONFIGURATION CHANGE DESCRIPTION	OPS/ DATE	CV PARTY/ DATE	OPS/ DATE	IV/ DATE
1-ISV-82-517A1-A	UNLOCK and CLOSE				
1-ISV-82-525A1-A	UNLOCK and CLOSE				
1-ISV-82-520A1-A	UNLOCK and CLOSE				
1-ISV-82-528A1-A	UNLOCK and CLOSE				
1-LOV-82-518A1-A	OPEN				
1-LOV-82-526A1-A	OPEN				

[10] **MANUALLY ACTUATE** each of the following solenoid valves by LIFTING the “T” handle to VENT residual downstream air pressure, **THEN**

RELEASE “T” handle:

1-FSV-82-160, AIR START SOL VLV ENG 1A1 _____

1-FSV-82-170, AIR START SOL VLV ENG 1A1 _____

[11] **PLACE** 1-HS-57-47, DG SYNC SWITCH [0-M-26], in SYN. _____

[12] **NOTIFY** UO that DG will be starting.

[13] **ENSURE** personnel are in communication to time interval from DG start initiation UNTIL required voltage and frequency are obtained. _____

Appendix C
(Page 4 of 6)

Diesel Generator Drag Start Test With Air Start Motors Isolated For Engine 1A1

Date _____

1.0 DG DRAG START TEST (continued)

[14] **DISPATCH** personnel to **MONITOR** engine 1A1 and 1A2 air start motors during diesel start. _____

[15] **START** recorder. _____

[16] **PROCEED** with countdown sequence of 3, 2, 1, START, **THEN**

PRESS 1-HS-82-16A, EMERGENCY START [0-M-26], to initiate DG start. _____

[17] **RECORD** Time of engine start.

Time:_____ _____

[18] **MONITOR** 1-EI-82-4, INCOMING VOLTAGE, **AND**

1-XI-82-2, INCOMING FREQUENCY [0-M-26]. _____

[19] **WHEN** volts and Frequency are stable, **THEN**

STOP recorder. _____

[20] **RECORD** from recorder, the Time required for voltage to reach 6800V, and frequency 58.8 Hz.

Time: _____ Seconds _____ _____

[21] **VERIFY** from recorder that DG voltage was at least 6800V with frequency at least 58.8 Hz within 10 seconds from DG start. **(Acc Crit)** _____

[22] **VERIFY** air start motors (4) pinions **NOT ENGAGED** with flywheel during startup.

A. Engine 1A1 left bank air start motors. _____

B. Engine 1A1 right bank air start motors. _____

Appendix C
(Page 5 of 6)

Diesel Generator Drag Start Test With Air Start Motors Isolated For Engine 1A1

Date _____

1.0 DG DRAG START TEST (continued)

[23] **VERIFY** air start motors (4) pinions ENGAGED with flywheel during startup, **THEN**

DISENGAGE.

A. Engine 1A2 left bank air start motors. _____

B. Engine 1A2 right bank air start motors. _____

CAUTION

86 LOR relay cannot be reset if Red light above 86 LOR, is lit.

[24] **RESET** 1-RLY-82-86LOR1, DG 1A-A EMERGENCY START LOCKOUT [1-ARB-82-A/1]. _____

[25] **ENSURE** ES1AY Amber light is LIT [1-PNL-211-A-A]. _____

[26] **PLACE** 1-HS-57-47, DG SYNC switch [0-M-26] in OFF, **AND** _____

IF overspeed trip test is to be performed, **THEN**

PERFORM Section 7.1.2 of this MI, **OR**

PERFORM Section 7.1.3 of applicable MI. _____

[27] **SHUT DOWN** DG in accordance with SOI-82.01. _____

[28] **RETURN** components in Table 1A1 to normal configuration using the reverse sequence (bottom-to-top), **AND**

DOCUMENT performance. _____

[29] **TURN OFF** the DG-DAQ computer. _____

[30] **TURN OFF** the SCXI box. _____

[31] **TURN OFF** the current probe box. _____

Appendix C
(Page 6 of 6)

Diesel Generator Drag Start Test With Air Start Motors Isolated For Engine 1A1

Date _____

1.0 DG DRAG START TEST (continued)

[32] **REMOVE** the PK test block from TB1**, AND**

REINSTALL the cover. _____

_____
IV

[33] **REMOVE** the current probe from the wire at ES1AY relay. _____

[34] **NOTIFY** SRO/Test Director that the DG-DAQ has been removed from the DG control circuits. _____

Appendix D
(Page 1 of 6)

Diesel Generator Drag Start Test With Air Start Motors Isolated For Engine 1A2

Date _____

1.0 DG DRAG START TEST

Perform this Appendix when inspecting Engine 1A2 to isolate Engine 1A2 starting air system to allow starting both engines with Engine 1A1 air start motors and verifying voltage and frequency of generator..

ACCEPTANCE CRITERIA: Diesel generator started with one engine's air start motors (4) isolated and achieved voltage ≥ 6800V and frequency ≥ 58.8 Hz in ≤ 10 seconds.

Test Equipment Setup

NOTES

1) Install equipment for testing engine overspeed trip device and aftercooler assembly as required.
2) The DG-DAQ is installed at the DG Protection Panel.
3) The System Engineer may assist in DG-DAQ setup.

[1] **CONFIGURE** PK test blocks for TB1**-** All jumpers INSTALLED and all thumb nuts WRENCH TIGHT. _____

NOTE

Black is positive and white is negative.

[2] **CONNECT** DG-DAQ Channel 0 black wire to Terminal 2 of the PK test block for TB1 and the white wire to Terminal 4 of the PK test block for TB1, **AND**

INSERT PK test block into TB1. _____

NOTE

The current probe should be zeroed prior to connecting to the ES1AY relay.

[3] **ZERO** the current probe indication. _____

[4] **PUT** Start signal into DG-DAQ Channel 2, using clamp-on probe around coil wire 11 or 12 of relay ES1AY. _____

Appendix D
(Page 2 of 6)

Diesel Generator Drag Start Test With Air Start Motors Isolated For Engine 1A2

Date _____

1.0 DG DRAG START TEST (continued)

[5] **TURN ON** the DG-DAQ. _____

[6] **TURN ON** the SCXI box. _____

[7] **SETUP** DG-DAQ Channel 0 for an input of +212 to -212 V dc and multiplication factor of 60.0 _____

_____
CV

[8] **SETUP** DG-DAQ Channel 2 for an input of +0.1 to -0.1 V dc and multiplication factor of 1.0 _____

_____
CV

CAUTION

If the valves in the Table 1A2 are not configured in the order given, an alarm initiation is possible.

[9] **IMPLEMENT** configuration changes in TABLE 1A2 in the sequence listed (top-to-bottom), **AND**

DOCUMENT performance. _____

Appendix D
(Page 3 of 6)

Diesel Generator Drag Start Test With Air Start Motors Isolated For Engine 1A2

Date _____

1.0 DG DRAG START TEST (continued)

TABLE 1A2[2]

		VERIFICATIONS			
		CONFIGURATION CHANGE		RETURN TO NORMAL	
AFFECTED COMPONENT	CONFIGURATION CHANGE DESCRIPTION	OPS/ DATE	CV DATE	OPS/ DATE	IV/ DATE
1-ISV-82-551A2-A	UNLOCK and CLOSE				
1-ISV-82-559A2-A	UNLOCK and CLOSE				
1-ISV-82-554A2-A	UNLOCK and CLOSE				
1-ISV-82-562A2-A	UNLOCK and CLOSE				
1-LOV-82-552A2-A	OPEN				
1-LOV-82-560A2-A	OPEN				

[10] **MANUALLY ACTUATE** each of the following solenoid valves by LIFTING the "T" handle to VENT residual downstream air pressure, **THEN**

RELEASE "T" handle:

1-FSV-82-161, AIR START SOL VLV ENG 1A2 _____

1-FSV-82-171, AIR START SOL VLV ENG 1A2 _____

[11] **PLACE** 1-HS-57-47, DG SYNC SWITCH [0-M-26], in SYN. _____

[12] **NOTIFY** UO that DG will be starting,

[13] **ENSURE** personnel are in communication to time interval from DG start initiation UNTIL required voltage and frequency are obtained. _____

Appendix D
(Page 4 of 6)

Diesel Generator Drag Start Test With Air Start Motors Isolated For Engine 1A2

Date _____

1.0 DG DRAG START TEST (continued)

[14] **DISPATCH** personnel to monitor engine 1A1 and 1A2 air start motors during diesel start. _____

[15] **START** recorder. _____

[16] **PROCEED** with countdown sequence of 3, 2, 1, START, **THEN**

PRESS 1-HS-82-16A, EMERGENCY START [0-M-26], to initiate DG start. _____

[17] **RECORD** Time of engine start.

Time:_____ _____

[18] **MONITOR** 1-EI-82-4, INCOMING VOLTAGE, **AND**

1-XI-82-2, INCOMING FREQUENCY [0-M-26]. _____

[19] **WHEN** volts and Frequency are stable, **THEN**

STOP recorder. _____

[20] **RECORD** from recorder, the Time required for voltage to reach 6800V, and frequency 58.8 Hz.

Time: _____ Seconds _____ _____

[21] **VERIFY** from recorder that DG voltage was at least 6800V with frequency at least 58.8 Hz within 10 seconds from DG start. **(Acc Crit)** _____

[22] **VERIFY** air start motors (4) pinions **NOT** ENGAGED with flywheel during startup.

A. Engine 1A2 left bank air start motors. _____

B. Engine 1A2 right bank air start motors. _____

Appendix D
(Page 5 of 6)

Diesel Generator Drag Start Test With Air Start Motors Isolated For Engine 1A2

Date _____

1.0 DG DRAG START TEST (continued)

[23] **VERIFY** air start motors (4) pinions ENGAGED with flywheel during startup, **THEN**

DISENGAGE.

A. Engine 1A1 left bank air start motors. _____

B. Engine 1A1 right bank air start motors. _____

CAUTION

86 LOR relay cannot be reset if Red light above 86 LOR, is lit.

[24] **RESET** 1-RLY-82-86LOR1, DG 1A-A EMERGENCY START LOCKOUT [1-ARB-82-A/1]. _____

[25] **ENSURE** ES1AY Amber light is LIT [1-PNL-211-A-A]. _____

[26] **PLACE** 1-HS-57-47, DG SYNC switch [0-M-26] in OFF, **AND** _____

IF overspeed trip test is to be performed, **THEN**

PERFORM Section 7.1.2 of this MI, **OR**

PERFORM Section 7.1.3 of applicable MI. _____

[27] **SHUT DOWN** DG in accordance with SOI-82.01. _____

[28] **RETURN** components in Table 1A2 to normal configuration using the reverse sequence (bottom-to-top), **AND**

DOCUMENT performance. _____

[29] **TURN OFF** the DG-DAQ computer. _____

[30] **TURN OFF** the SCXI box. _____

[31] **TURN OFF** the current probe box. _____

Appendix D
(Page 6 of 6)

Diesel Generator Drag Start Test With Air Start Motors Isolated For Engine 1A2

Date _____

1.0 DG DRAG START TEST (continued)

[32] **REMOVE** the PK test block from TB1**, AND**

REINSTALL the cover. _____

_____
IV

[33] **REMOVE** the current probe from the wire at ES1AY relay. _____

[34] **NOTIFY** SRO/Test Director that the DG-DAQ has been removed from the DG control circuits. _____

Appendix E
(Page 1 of 6)

Diesel Generator Drag Start Test With Air Start Motors Isolated For Engine 1B1

Date _____

1.0 DG DRAG START TEST

Perform this Appendix when inspecting Engine 1B1 to isolate Engine 1B1 starting air system to allow starting both engines with Engine 1B2 air start motors and verifying voltage and frequency of generator..

ACCEPTANCE CRITERIA: Diesel generator started with one engine's air start motors (4) isolated and achieved voltage ≥ 6800V and frequency ≥ 58.8 Hz in ≤ 10 seconds.

Test Equipment Setup

NOTES

1) Install equipment for testing engine overspeed trip device and aftercooler assembly as required.
2) The DG-DAQ is installed at the DG Protection Panel.
3) The System Engineer may assist in DG-DAQ setup.

[1] **CONFIGURE** PK test blocks for TB1**-** All jumpers INSTALLED and all thumb nuts WRENCH TIGHT. _____

NOTE

Black is positive and white is negative.

[2] **CONNECT** DG-DAQ Channel 0 black wire to Terminal 2 of the PK test block for TB1 and the white wire to Terminal 4 of the PK test block for TB1, **AND**

INSERT PK test block into TB1. _____

NOTE

The current probe should be zeroed prior to connecting to the ES1BY relay.

[3] **ZERO** the current probe indication. _____

Appendix E
(Page 2 of 6)

Diesel Generator Drag Start Test With Air Start Motors Isolated For Engine 1B1

Date _____

1.0 DG DRAG START TEST (continued)

[4] **PUT** Start signal into DG-DAQ Channel 2, using clamp-on probe around coil wire 11 or 12 of relay ES1BY. _____

[5] **TURN ON** the DG-DAQ. _____

[6] **TURN ON** the SCXI box. _____

[7] **SETUP** DG-DAQ Channel 0 for an input of +212 to -212 V dc and multiplication factor of 60.0 _____

_____
CV

[8] **SETUP** DG-DAQ Channel 2 for an input of +0.1 to -0.1 V dc and multiplication factor of 1.0 _____

_____
CV

Appendix E
(Page 3 of 6)

Diesel Generator Drag Start Test With Air Start Motors Isolated For Engine 1B1

Date _____

1.0 DG DRAG START TEST (continued)

CAUTION

If the valves in the Table 1B1 are not configured in the order given, an alarm initiation is possible.

[9] **IMPLEMENT** configuration changes in TABLE 1B1 in the sequence listed (top-to-bottom), **AND**

DOCUMENT performance. _____

TABLE 1B1[2]

		VERIFICATIONS			
		CONFIGURATION CHANGE		RETURN TO NORMAL	
AFFECTED COMPONENT	CONFIGURATION CHANGE DESCRIPTION	OPS/ DATE	CV/ DATE	OPS/ DATE	IV/ DATE
1-ISV-82-517B1-B	UNLOCK and CLOSE				
1-ISV-82-525B1-B	UNLOCK and CLOSE				
1-ISV-82-520B1-B	UNLOCK and CLOSE				
1-ISV-82-528B1-B	UNLOCK and CLOSE				
1-LOV-82-518B1-B	OPEN				
1-LOV-82-526B1-B	OPEN				

Appendix E
(Page 4 of 6)

Diesel Generator Drag Start Test With Air Start Motors Isolated For Engine 1B1

Date _____

1.0 DG DRAG START TEST (continued)

[10] **MANUALLY ACTUATE** each of the following solenoid valves by LIFTING the "T" handle to VENT residual downstream air pressure, **THEN**

RELEASE "T" handle:

1-FSV-82-190, AIR START SOL VLV ENG 1B1 _____

1-FSV-82-200, AIR START SOL VLV ENG 1B1 _____

[11] **PLACE** 1-HS-57-74, DG SYNC SWITCH [0-M-26], in SYN. _____

[12] **NOTIFY** UO that DG will be starting.

[13] **ENSURE** personnel are in communication to time interval from DG start initiation UNTIL required voltage and frequency are obtained. _____

[14] **DISPATCH** personnel to monitor engine 1B1 and 1B2 air start motors during diesel start. _____

[15] **START** recorder. _____

[16] **PROCEED** with countdown sequence of 3, 2, 1, START, **THEN**

PRESS 1-HS-82-46A, EMERGENCY START [0-M-26], to initiate DG start. _____

[17] **RECORD** Time of engine start.

Time:_____ _____

[18] **MONITOR** 1-EI-82-34, INCOMING VOLTAGE, **AND**

1-XI-82-32, INCOMING FREQUENCY [0-M-26]. _____

[19] **WHEN** volts and Frequency are stable, **THEN**

STOP recorder. _____

Appendix E
(Page 5 of 6)

Diesel Generator Drag Start Test With Air Start Motors Isolated For Engine 1B1

Date _____

1.0 DG DRAG START TEST (continued)

[20] **RECORD** from recorder, the Time required for voltage to reach 6800V, and frequency 58.8 Hz.

Time: _____ Seconds _____ _____

[21] **VERIFY** from recorder that DG voltage was at least 6800V with frequency at least 58.8 Hz within 10 seconds from DG start. **(Acc Crit)** _____

[22] **VERIFY** air start motors (4) pinions **NOT** ENGAGED with flywheel during startup.

A. Engine 1B1 left bank air start motors. _____

B. Engine 1B1 right bank air start motors. _____

[23] **VERIFY** air start motors (4) pinions ENGAGED with flywheel during startup, **THEN**

DISENGAGE.

A. Engine 1B2 left bank air start motors. _____

B. Engine 1B2 right bank air start motors. _____

CAUTION

86 LOR relay cannot be reset if Red light above 86 LOR, is lit.

[24] **RESET** 1-RLY-82-86LOR2, DG 1B-B EMERGENCY START LOCKOUT [1-ARB-82-B/1]. _____

[25] **ENSURE** ES1BY Amber light is LIT [1-PNL-211-B-B]. _____

Appendix E
(Page 6 of 6)

Diesel Generator Drag Start Test With Air Start Motors Isolated For Engine 1B1

Date _____

1.0 DG DRAG START TEST (continued)

[26] **PLACE** 1-HS-57-74, DG SYNC switch [0-M-26] in OFF, **AND** _____

IF overspeed trip test is to be performed, **THEN**

PERFORM Section 7.1.2 of this MI, **OR**

PERFORM Section 7.1.3 of applicable MI. _____

[27] **SHUT DOWN** DG in accordance with SOI-82.02. _____

[28] **RETURN** components in Table 1B1 to normal configuration using the reverse sequence (bottom-to-top), **AND**

DOCUMENT performance. _____

[29] **TURN OFF** the DG-DAQ computer. _____

[30] **TURN OFF** the SCXI box. _____

[31] **TURN OFF** the current probe box. _____

[32] **REMOVE** the PK test block from TB1**, AND**

REINSTALL the cover. _____

_____
IV

[33] **REMOVE** the current probe from the wire at ES1BY relay. _____

[34] **NOTIFY** SRO/Test Director that the DG-DAQ has been removed from the DG control circuits. _____

Appendix F
(Page 1 of 6)

Diesel Generator Drag Start Test With Air Start Motors Isolated For Engine 1B2

Date _____

1.0 DG DRAG START TEST

Perform this Appendix when inspecting Engine 1B2 to isolate Engine 1B2 starting air system to allow starting both engines with Engine 1B1 air start motors and verifying voltage and frequency of generator.

ACCEPTANCE CRITERIA: Diesel generator started with one engine's air start motors (4) isolated and achieved voltage ≥ 6800V and frequency ≥ 58.8 Hz in ≤ 10 seconds.

Test Equipment Setup

NOTES

1) Install equipment for testing engine overspeed trip device and aftercooler assembly as required.
2) The DG-DAQ is installed at the DG Protection Panel.
3) The System Engineer may assist in DG-DAQ setup.

[1] **CONFIGURE** PK test blocks for TB1**-** All jumpers INSTALLED and all thumb nuts WRENCH TIGHT. _____

NOTE

Black is positive and white is negative.

[2] **CONNECT** DG-DAQ Channel 0 black wire to Terminal 2 of the PK test block for TB1 and the white wire to Terminal 4 of the PK test block for TB1, **AND**

INSERT PK test block into TB1**.** _____

NOTE

The current probe should be zeroed prior to connecting to the ES1BY relay.

[3] **ZERO** the current probe indication. _____

Appendix F
(Page 2 of 6)

Diesel Generator Drag Start Test With Air Start Motors Isolated For Engine 1B2

Date _____

1.0 DG DRAG START TEST (continued)

[4] **PUT** Start signal into DG-DAQ Channel 2, using clamp-on probe around coil wire 11 or 12 of relay ES1BY. _____

[5] **TURN ON** the DG-DAQ. _____

[6] **TURN ON** the SCXI box. _____

[7] **SETUP** DG-DAQ Channel 0 for an input of +212 to -212 V dc and multiplication factor of 60.0 _____

_____ CV

[8] **SETUP** DG-DAQ Channel 2 for an input of +0.1 to -0.1 V dc and multiplication factor of 1.0 _____

_____ CV

CAUTION

If the valves in the Table 1B2 are not configured in the order given, an alarm initiation is possible.

[9] **IMPLEMENT** configuration changes in TABLE 1B2 in the sequence listed (top-to-bottom), **AND**

DOCUMENT performance. _____

Appendix F
(Page 3 of 6)

Diesel Generator Drag Start Test With Air Start Motors Isolated For Engine 1B2

Date _____

1.0 DG DRAG START TEST (continued)

TABLE 1B2[2]

		VERIFICATIONS			
		CONFIGURATION CHANGE		RETURN TO NORMAL	
AFFECTED COMPONENT	CONFIGURATION CHANGE DESCRIPTION	OPS/ DATE	CV/ DATE	OPS/ DATE	IV/ DATE
1-ISV-82-551B2-B	UNLOCK and CLOSE				
1-ISV-82-559B2-B	UNLOCK and CLOSE				
1-ISV-82-554B2-B	UNLOCK and CLOSE				
1-ISV-82-562B2-B	UNLOCK and CLOSE				
1-LOV-82-552B2-B	OPEN				
1-LOV-82-560B2-B	OPEN				

[10] **MANUALLY ACTUATE** each of the following solenoid valves by LIFTING the "T" handle to VENT residual downstream air pressure, **THEN**

RELEASE "T" handle:

1-FSV-82-191, AIR START SOL VLV ENG 1B2 _____

1-FSV-82-201, AIR START SOL VLV ENG 1B2 _____

[11] **PLACE** 1-HS-57-74, DG SYNC SWITCH [0-M-26], in SYN. _____

[12] **NOTIFY** UO that DG will be starting,

[13] **ENSURE** personnel are in communication to time interval from DG start initiation UNTIL required voltage and frequency are obtained. _____

Appendix F
(Page 4 of 6)

Diesel Generator Drag Start Test With Air Start Motors Isolated For Engine 1B2

Date _____

1.0 DG DRAG START TEST (continued)

[14] **DISPATCH** personnel to monitor engine 1B1 and 1B2 air start motors during diesel start. _____

[15] **START** recorder. _____

[16] **PROCEED** with countdown sequence of 3, 2, 1, START, **THEN**

PRESS 1-HS-82-46A, EMERGENCY START [0-M-26], to initiate DG start. _____

[17] **RECORD** Time of engine start.

Time:_____ _____

[18] **MONITOR** 1-EI-82-34, INCOMING VOLTAGE, **AND**

1-XI-82-32, INCOMING FREQUENCY [0-M-26]. _____

[19] **WHEN** volts and Frequency are stable, **THEN**

STOP recorder. _____

[20] **RECORD** from recorder, the Time required for voltage to reach 6800V, and frequency 58.8 Hz.

Time: _____ Seconds _____ _____

[21] **VERIFY** from recorder that DG voltage was at least 6800V with frequency at least 58.8 Hz within 10 seconds from DG start. **(Acc Crit)** _____

[22] **VERIFY** air start motors (4) pinions **NOT** ENGAGED with flywheel during startup.

A. Engine 1B2 left bank air start motors. _____

B. Engine 1B2 right bank air start motors. _____

Appendix F
(Page 5 of 6)

Diesel Generator Drag Start Test With Air Start Motors Isolated For Engine 1B2

Date _____

1.0 DG DRAG START TEST (continued)

[23] **VERIFY** air start motors (4) pinions ENGAGED with flywheel during startup, **THEN**

DISENGAGE.

A. Engine 1B1 left bank air start motors. _____

B. Engine 1B1 right bank air start motors. _____

CAUTION

86 LOR relay cannot be reset if Red light above 86 LOR, is lit.

[24] **RESET** 1-RLY-82-86LOR2, DG 1B-B EMERGENCY START LOCKOUT [1-ARB-82-B/1]. _____

[25] **ENSURE** ES1BY Amber light is LIT [1-PNL-211-B-B]. _____

[26] **PLACE** 1-HS-57-74, DG SYNC switch [0-M-26] in OFF, **AND** _____

IF overspeed trip test is to be performed, **THEN**

PERFORM Section 7.1.2 of this MI, **OR**

PERFORM Section 7.1.3 of applicable MI. _____

[27] **SHUT DOWN** DG in accordance with SOI-82.02. _____

[28] **RETURN** components in Table 1B2 to normal configuration using the reverse sequence (bottom-to-top), **AND**

DOCUMENT performance. _____

[29] **TURN OFF** the DG-DAQ computer. _____

[30] **TURN OFF** the SCXI box. _____

[31] **TURN OFF** the current probe box. _____

Appendix F
(Page 6 of 6)

Diesel Generator Drag Start Test With Air Start Motors Isolated For Engine 1B2

Date _____

1.0 DG DRAG START TEST (continued)

[32] **REMOVE** the PK test block from TB1**, AND**

REINSTALL the cover. _____

_____
IV

[33] **REMOVE** the current probe from the wire at ES1BY relay. _____

[34] **NOTIFY** SRO/Test Director that the DG-DAsq has been removed from the DG control circuits. _____

Appendix G
(Page 1 of 6)

Diesel Generator Drag Start Test With Air Start Motors Isolated For Engine 2A1

1.0 DG DRAG START TEST

Perform this Appendix when inspecting Engine 2A1 to isolate Engine 2A1 starting air system to allow starting both engines with Engine 2A2 air start motors and verifying voltage and frequency of generator..

ACCEPTANCE CRITERIA: Diesel generator started with one engine's air start motors (4) isolated and achieved voltage ≥ 6800V and frequency ≥ 58.8 Hz in ≤ 10 seconds.

Test Equipment Setup

NOTES

1) Install equipment for testing engine overspeed trip device and aftercooler assembly as required.
2) The DG-DAQ is installed at the DG Protection Panel.
3) The System Engineer may assist in DG-DAQ setup.

[1] **CONFIGURE** PK test blocks for TB1**-** All jumpers INSTALLED and all thumb nuts WRENCH TIGHT. _____

NOTE

Black is positive and white is negative.

[2] **CONNECT** DG-DAQ Channel 0 black wire to Terminal 2 of the PK test block for TB1 and the white wire to Terminal 4 of the PK test block for TB1, **AND**

INSERT PK test block into TB1. _____

NOTE

The current probe should be zeroed prior to connecting to the ES2AY relay.

[3] **ZERO** the current probe indication. _____

[4] **PUT** Start signal into DG-DAQ Channel 2, using clamp-on probe around coil wire 11 or 12 of relay ES2AY. _____

Appendix G
(Page 2 of 6)

Diesel Generator Drag Start Test With Air Start Motors Isolated For Engine 2A1

Date _____

1.0 DG DRAG START TEST (continued)

[5] **TURN ON** the DG-DAQ. _____

[6] **TURN ON** the SCXI box. _____

[7] **SETUP** DG-DAQ Channel 0 for an input of +212 to -212 V dc and multiplication factor of 60.0 _____

_____
CV

[8] **SETUP** DG-DAQ Channel 2 for an input of +0.1 to -0.1 V dc and multiplication factor of 1.0 _____

_____
CV

CAUTION

If the valves in the Table 2A1 are not configured in the order given, an alarm initiation is possible.

[9] **IMPLEMENT** configuration changes in TABLE 2A1 in the sequence listed (top-to-bottom), **AND**

DOCUMENT performance. _____

Appendix G
(Page 3 of 6)

Diesel Generator Drag Start Test With Air Start Motors Isolated For Engine 2A1

Date _____

1.0 DG DRAG START TEST (continued)

TABLE 2A1[2]

		VERIFICATIONS			
		CONFIGURATION CHANGE		RETURN TO NORMAL	
AFFECTED COMPONENT	CONFIGURATION CHANGE DESCRIPTION	OPS/ DATE	CV/ DATE	OPS/ DATE	IV/ DATE
2-ISV-82-517A1-A	UNLOCK and CLOSE				
2-ISV-82-525A1-A	UNLOCK and CLOSE				
2-ISV-82-520A1-A	UNLOCK and CLOSE				
2-ISV-82-528A1-A	UNLOCK and CLOSE				
2-LOV-82-518A1-A	OPEN				
2-LOV-82-526A1-A	OPEN				

[10] **MANUALLY ACTUATE** each of the following solenoid valves by LIFTING the “T” handle to VENT residual downstream air pressure, **THEN**

RELEASE “T” handle:

2-FSV-82-220, AIR START SOL VLV ENG 2A1 _____

2-FSV-82-230, AIR START SOL VLV ENG 2A1 _____

[11] **PLACE** 2-HS-57-47, DG SYNC SWITCH [0-M-26], in SYN. _____

[12] **NOTIFY** UO that DG will be starting.

[13] **ENSURE** personnel are in communication to time interval from DG start initiation UNTIL required voltage and frequency are obtained. _____

Appendix G
(Page 4 of 6)

Diesel Generator Drag Start Test With Air Start Motors Isolated For Engine 2A1

Date _____

1.0 DG DRAG START TEST (continued)

[14] **DISPATCH** personnel to monitor engine 2A1 and 2A2 air start motors during diesel start. _____

[15] **START** recorder. _____

[16] **PROCEED** with countdown sequence of 3, 2, 1, START, **THEN**

PRESS 2-HS-82-76A, EMERGENCY START [0-M-26], to initiate DG start. _____

[17] **RECORD** Time of engine start.

Time:_____ _____

[18] **MONITOR** 2-EI-82-64, INCOMING VOLTAGE, **AND**

2-XI-82-62, INCOMING FREQUENCY [0-M-26]. _____

[19] **WHEN** volts and Frequency are stable, **THEN**

STOP recorder. _____

[20] **RECORD** from recorder, the Time required for voltage to reach 6800V, and frequency 58.8 Hz.

Time: _____ Seconds _____ _____

[21] **VERIFY** from recorder that DG voltage was at least 6800V with frequency at least 58.8 Hz within 10 seconds from DG start. **(Acc Crit)** _____

[22] **VERIFY** air start motors (4) pinions **NOT** ENGAGED with flywheel during startup.

A. Engine 2A1 left bank air start motors. _____

B. Engine 2A1 right bank air start motors. _____

Appendix G
(Page 5 of 6)

Diesel Generator Drag Start Test With Air Start Motors Isolated For Engine 2A1

Date _____

1.0 DG DRAG START TEST (continued)

[23] **VERIFY** air start motors (4) pinions ENGAGED with flywheel during startup, **THEN**

DISENGAGE.

A. Engine 2A2 left bank air start motors. _____

B. Engine 2A2 right bank air start motors. _____

CAUTION

86 LOR relay cannot be reset if Red light above 86 LOR, is lit.

[24] **RESET** 2-RLY-82-86LOR1, DG 2A-A EMERGENCY START LOCKOUT [2-ARB-82-A/1]. _____

[25] **ENSURE** ES2AY Amber light is LIT [2-PNL-211-A-A]. _____

[26] **PLACE** 2-HS-57-47, DG SYNC switch [0-M-26] in OFF, **AND** _____

IF overspeed trip test is to be performed, **THEN**

PERFORM Section 7.1.2 of this MI, **OR**

PERFORM Section 7.1.3 of applicable MI. _____

[27] **SHUT DOWN** DG in accordance with SOI-82.03. _____

[28] **RETURN** components in Table 2A1 to normal configuration using the reverse sequence (bottom-to-top), **AND**

DOCUMENT performance. _____

[29] **TURN OFF** the DG-DAQ computer. _____

[30] **TURN OFF** the SCXI box. _____

[31] **TURN OFF** the current probe box. _____

Appendix G
(Page 6 of 6)

Diesel Generator Drag Start Test With Air Start Motors Isolated For Engine 2A1

Date _____

1.0 DG DRAG START TEST (continued)

[32] **REMOVE** the PK test block from TB1**, AND**

REINSTALL the cover. _____

_____
IV

[33] **REMOVE** the current probe from the wire at ES2AY relay. _____

[34] **NOTIFY** SRO/Test Director that the DG-DAQ has been removed from the DG control circuits. _____

Appendix H
(Page 1 of 6)

Diesel Generator Drag Start Test With Air Start Motors Isolated For Engine 2A2

1.0 DG DRAG START TEST

Perform this Appendix when inspecting Engine 2A2 to isolate Engine 2A2 starting air system to allow starting both engines with Engine 2A1 air start motors and verifying voltage and frequency of generator..

ACCEPTANCE CRITERIA: Diesel generator started with one engine's air start motors (4) isolated and achieved voltage ≥ 6800V and frequency ≥ 58.8 Hz in ≤ 10 seconds.

Test Equipment Setup

NOTES

1) Install equipment for testing engine overspeed trip device and aftercooler assembly as required.
2) The DG-DAQ is installed at the DG Protection Panel.
3) The System Engineer may assist in DG-DAQ setup.

[1] **CONFIGURE** PK test blocks for TB1**-** All jumpers INSTALLED and all thumb nuts TIGHT. _____

NOTE

Black is positive and white is negative.

[2] **CONNECT** DG-DAQ Channel 0 black wire to Terminal 2 of the PK test block for TB1 and the white wire to Terminal 4 of the PK test block for TB1, **AND**

INSERT PK test block into TB1. _____

NOTE

The current probe should be zeroed prior to connecting to the ES2AY relay.

[3] **ZERO** the current probe indication. _____

[4] **PUT** Start signal into DG-DAQ Channel 2, using clamp-on probe around coil wire 11 or 12 of relay ES2AY. _____

Appendix H
(Page 2 of 6)

Diesel Generator Drag Start Test With Air Start Motors Isolated For Engine 2A2

Date _____

1.0 DG DRAG START TEST (continued)

[5] **TURN ON** the DG-DAQ. _____

[6] **TURN ON** the SCXI box. _____

[7] **SETUP** DG-DAQ Channel 0 for an input of +212 to -212 V dc and multiplication factor of 60.0 _____

_____ CV

[8] **SETUP** DG-DAQ Channel 2 for an input of +0.1 to -0.1 V dc and multiplication factor of 1.0 _____

_____ CV

CAUTION

If the valves in the Table 2A2 are not configured in the order given, an alarm initiation is possible.

[9] **IMPLEMENT** configuration changes in TABLE 2A2 in the sequence listed (top-to-bottom), **AND**

DOCUMENT performance. _____

Appendix H
(Page 3 of 6)

Diesel Generator Drag Start Test With Air Start Motors Isolated For Engine 2A2

Date _____

1.0 DG DRAG START TEST (continued)

TABLE 2A2[2]

		VERIFICATIONS			
		CONFIGURATION CHANGE		RETURN TO NORMAL	
AFFECTED COMPONENT	CONFIGURATION CHANGE DESCRIPTION	OPS/ DATE	CV/ DATE	OPS/ DATE	IV/ DATE
2-ISV-82-551A2-A	UNLOCK and CLOSE				
2-ISV-82-559A2-A	UNLOCK and CLOSE				
2-ISV-82-554A2-A	UNLOCK and CLOSE				
2-ISV-82-562A2-A	UNLOCK and CLOSE				
2-LOV-82-552A2-A	OPEN				
2-LOV-82-560A2-A	OPEN				

[10] **MANUALLY ACTUATE** each of the following solenoid valves by lifting the "T" handle to VENT residual downstream air pressure, **THEN**

RELEASE "T" handle:

2-FSV-82-221, AIR START SOL VLV ENG 2A2 _____

2-FSV-82-231, AIR START SOL VLV ENG 2A2 _____

[11] **PLACE** 2-HS-57-47, DG SYNC SWITCH [0-M-26], in SYN. _____

[12] **NOTIFY** UO that DG will be starting,

[13] **ENSURE** personnel are in communication to time interval from DG start initiation UNTIL required voltage and frequency are obtained. _____

Appendix H
(Page 4 of 6)

Diesel Generator Drag Start Test With Air Start Motors Isolated For Engine 2A2

Date _____

1.0 DG DRAG START TEST (continued)

[14] **DISPATCH** personnel to monitor engine 2A1 and 2A2 air start motors during diesel start. _____

[15] **START** recorder. _____

[16] **PROCEED** with countdown sequence of 3, 2, 1, START, **THEN**

PRESS 2-HS-82-76A, EMERGENCY START [0-M-26], to initiate DG start. _____

[17] **RECORD** Time of engine start.

Time:_____ _____

[18] **MONITOR** 2-EI-82-64, INCOMING VOLTAGE, **AND**

2-XI-82-62, INCOMING FREQUENCY [0-M-26]. _____

[19] **WHEN** volts and Frequency are stable, **THEN**

STOP recorder. _____

[20] **RECORD** from recorder, the Time required for voltage to reach 6800V, and frequency 58.8 Hz.

Time: _____ Seconds _____ _____

[21] **VERIFY** from recorder that DG voltage was at least 6800V with frequency at least 58.8 Hz within 10 seconds from DG start. **(Acc Crit)** _____

[22] **VERIFY** air start motors (4) pinions **NOT** ENGAGED with flywheel during startup.

A. Engine 2A2 left bank air start motors. _____

B. Engine 2A2 right bank air start motors. _____

Appendix H
(Page 5 of 6)

Diesel Generator Drag Start Test With Air Start Motors Isolated For Engine 2A2

Date _____

1.0 DG DRAG START TEST (continued)

[23] **VERIFY** air start motors (4) pinions ENGAGED with flywheel during startup, **THEN**

DISENGAGE.

A. Engine 2A1 left bank air start motors. _____

B. Engine 2A1 right bank air start motors. _____

CAUTION

86 LOR relay cannot be reset if Red light above 86 LOR, is lit.

[24] **RESET** 2-RLY-82-86LOR1, DG 2A-A EMERGENCY START LOCKOUT [2-ARB-82-A/1]. _____

[25] **ENSURE** ES2AY Amber light is LIT [2-PNL-211-A-A]. _____

[26] **PLACE** 2-HS-57-47, DG SYNC switch [0-M-26] in OFF, **AND** _____

IF overspeed trip test is to be performed, **THEN**

PERFORM Section 7.1.2 of this MI, **OR**

PERFORM Section 7.1.3 of applicable MI. _____

[27] **SHUT DOWN** DG in accordance with SOI-82.03. _____

[28] **RETURN** components in Table 2A2 to normal configuration using the reverse sequence (bottom-to-top), **AND**

DOCUMENT performance. _____

[29] **TURN OFF** the DG-DAQ computer. _____

[30] **TURN OFF** the SCXI box. _____

[31] **TURN OFF** the current probe box. _____

Appendix H
(Page 6 of 6)

Diesel Generator Drag Start Test With Air Start Motors Isolated For Engine 2A2

Date _____

1.0 DG DRAG START TEST (continued)

[32] **REMOVE** the PK test block from TB1**, AND**

REINSTALL the cover. _____

_____
IV

[33] **REMOVE** the current probe from the wire at ES2AY relay. _____

[34] **NOTIFY** SRO/Test Director that the DG-DAQ has been removed from the DG control circuits. _____

Appendix I
(Page 1 of 6)

Diesel Generator Drag Start Test With Air Start Motors Isolated For Engine 2B1

1.0 DG DRAG START TEST

Perform this Appendix when inspecting Engine 2B1 to isolate Engine 2B1 starting air system to allow starting both engines with Engine 2B2 air start motors and verifying voltage and frequency of generator..

ACCEPTANCE CRITERIA: Diesel generator started with one engine's air start motors (4) isolated and achieved voltage ≥ 6800V and frequency ≥ 58.8 Hz in ≤ 10 seconds.

Test Equipment Setup

NOTES

1) Install equipment for testing engine overspeed trip device and aftercooler assembly as required.
2) The DG-DAQ is installed at the DG Protection Panel.
3) The System Engineer may assist in DG-DAQ setup.

[1] **CONFIGURE** PK test blocks for TB1**-** All jumpers INSTALLED and all thumb nuts WRENCH TIGHT. _____

NOTE

Black is positive and white is negative.

[2] **CONNECT** DG-DAQ Channel 0 black wire to Terminal 2 of the PK test block for TB1 and the white wire to Terminal 4 of the PK test block for TB1, **AND**

INSERT PK test block into TB1. _____

NOTE

The current probe should be zeroed prior to connecting to the ES2BY relay.

[3] **ZERO** the current probe indication. _____

[4] **PUT** Start signal into DG-DAQ Channel 2, using clamp-on probe around coil wire 11 or 12 of relay ES2BY. _____

Appendix I
(Page 2 of 6)

Diesel Generator Drag Start Test With Air Start Motors Isolated For Engine 2B1

Date _____

1.0 DG DRAG START TEST (continued)

[5] **TURN ON** the DG-DAQ. _____

[6] **TURN ON** the SCXI box. _____

[7] **SETUP** DG-DAQ Channel 0 for an input of +212 to -212 V dc and multiplication factor of 60.0 _____

_____ CV

[8] **SETUP** DG-DAQ Channel 2 for an input of +0.1 to -0.1 V dc and multiplication factor of 1.0 _____

_____ CV

CAUTION

If the valves in the Table 2B1 are not configured in the order given, an alarm initiation is possible.

[9] **IMPLEMENT** configuration changes in TABLE 2B1 in the sequence listed (top-to-bottom), **AND**

DOCUMENT performance. _____

Appendix I
(Page 3 of 6)

Diesel Generator Drag Start Test With Air Start Motors Isolated For Engine 2B1

Date _____

1.0 DG DRAG START TEST (continued)

TABLE 2B1[2]

		VERIFICATIONS			
		CONFIGURATION CHANGE		RETURN TO NORMAL	
AFFECTED COMPONENT	CONFIGURATION CHANGE DESCRIPTION	OPS/ DATE	CV/ DATE	OPS/ DATE	IV/ DATE
2-ISV-82-517B1-B	UNLOCK and CLOSE				
2-ISV-82-525B1-B	UNLOCK and CLOSE				
2-ISV-82-520B1-B	UNLOCK and CLOSE				
2-ISV-82-528B1-B	UNLOCK and CLOSE				
2-LOV-82-518B1-B	OPEN				
2-LOV-82-526B1-B	OPEN				

[10] **MANUALLY ACTUATE** each of the following solenoid valves by LIFTING the "T" handle to VENT residual downstream air pressure, **THEN**

RELEASE "T" handle:

2-FSV-82-250, AIR START SOL VLV ENG 2B1 _____

2-FSV-82-260, AIR START SOL VLV ENG 2B1 _____

[11] **PLACE** 2-HS-57-74, DG SYNC SWITCH [0-M-26], in SYN. _____

[12] **NOTIFY** UO that DG will be starting.

[13] **ENSURE** personnel are in communication to time interval from DG start initiation until required voltage and frequency are obtained. _____

Appendix I
(Page 4 of 6)

Diesel Generator Drag Start Test With Air Start Motors Isolated For Engine 2B1

Date _____

1.0 DG DRAG START TEST (continued)

[14] **DISPATCH** personnel to monitor engine 2B1 and 2B2 air start motors during diesel start. _____

[15] **START** recorder. _____

[16] **PROCEED** with countdown sequence of 3, 2, 1, START, **THEN**

PRESS 2-HS-82-106A, EMERGENCY START [0-M-26], to initiate DG start. _____

[17] **RECORD** Time of engine start.

Time:_____ _____

[18] **MONITOR** 2-EI-82-94, INCOMING VOLTAGE, **AND**

2-XI-82-92, INCOMING FREQUENCY [0-M-26]. _____

[19] **WHEN** volts and Frequency are stable, **THEN**

STOP recorder. _____

[20] **RECORD** from recorder, the Time required for voltage to reach 6800V, and frequency 58.8 Hz.

Time: _____ Seconds _____ _____

[21] **VERIFY** from recorder that DG voltage was at least 6800V with frequency at least 58.8 Hz within 10 seconds from DG start. **(Acc Crit)** _____

[22] **VERIFY** air start motors (4) pinions **NOT** ENGAGED with flywheel during startup.

A. Engine 2B1 left bank air start motors. _____

B. Engine 2B1 right bank air start motors. _____

Appendix I
(Page 5 of 6)

Diesel Generator Drag Start Test With Air Start Motors Isolated For Engine 2B1

Date _____

1.0 DG DRAG START TEST (continued)

[23] **VERIFY** air start motors (4) pinions ENGAGED with flywheel during startup, **THEN**

DISENGAGE.

A. Engine 2B2 left bank air start motors. _____

B. Engine 2B2 right bank air start motors. _____

CAUTION

86 LOR relay cannot be reset if Red light above 86 LOR, is lit.

[24] **RESET** 2-RLY-82-86LOR2, DG 2B-B EMERGENCY START LOCKOUT [2-ARB-82-B/1]. _____

[25] **ENSURE** ES2BY Amber light is LIT [2-PNL-211-B-B]. _____

[26] **PLACE** 2-HS-57-74, DG SYNC switch [0-M-26] in OFF, **AND** _____

IF overspeed trip test is to be performed, **THEN**

PERFORM Section 7.1.2 of this MI, **OR**

PERFORM Section 7.1.3 of applicable MI. _____

[27] **SHUT DOWN** DG in accordance with SOI-82.04. _____

[28] **RETURN** components in Table 2B1 to normal configuration using the reverse sequence (bottom-to-top), **AND**

DOCUMENT performance. _____

[29] **TURN OFF** the DG-DAQ computer. _____

[30] **TURN OFF** the SCXI box. _____

[31] **TURN OFF** the current probe box. _____

Appendix I
(Page 6 of 6)

Diesel Generator Drag Start Test With Air Start Motors Isolated For Engine 2B1

Date _____

1.0 DG DRAG START TEST (continued)

[32] **REMOVE** the PK test block from TB1**, AND**

REINSTALL the cover. _____

_____
IV

[33] **REMOVE** the current probe from the wire at ES2BY relay. _____

[34] **NOTIFY** SRO/Test Director that the DG-DAQ has been removed from the DG control circuits. _____

Appendix J
(Page 1 of 6)

Diesel Generator Drag Start Test With Air Start Motors Isolated For Engine 2B2

Date _____

1.0 DG DRAG START TEST

Perform this Appendix when inspecting Engine 2B2 to isolate Engine 2B2 starting air system to allow starting both engines with Engine 2B1 air start motors and verifying voltage and frequency of generator.

ACCEPTANCE CRITERIA: Diesel generator started with one engine's air start motors (4) isolated and achieved voltage ≥ 6800V and frequency ≥ 58.8 Hz in ≤ 10 seconds.

Test Equipment Setup

NOTES

1) Install equipment for testing engine overspeed trip device and aftercooler assembly as required.
2) The DG-DAQ is installed at the DG Protection Panel.
3) The System Engineer may assist in DG-DAQ setup.

[1] **CONFIGURE** PK test blocks for TB1**-** All jumpers INSTALLED and all thumb nuts WRENCH TIGHT. _____

NOTE

Black is positive and white is negative.

[2] **CONNECT** DG-DAQ Channel 0 black wire to Terminal 2 of the PK test block for TB1 and the white wire to Terminal 4 of the PK test block for TB1, **AND**

INSERT PK test block into TB1**.** _____

NOTE

The current probe should be zeroed prior to connecting to the ES2BY relay.

[3] **ZERO** the current probe indication. _____

Appendix J
(Page 2 of 6)

Diesel Generator Drag Start Test With Air Start Motors Isolated For Engine 2B2

Date _____

1.0 DG DRAG START TEST (continued)

[4] **PUT** Start signal into DG-DAQ Channel 2, using clamp-on probe around coil wire 11 or 12 of relay ES2BY. _____

[5] **TURN ON** the DG-DAQ. _____

[6] **TURN ON** the SCXI box. _____

[7] **SETUP** DG-DAQ Channel 0 for an input of +212 to -212 V dc and multiplication factor of 60.0 _____

_____
CV

[8] **SETUP** DG-DAQ Channel 2 for an input of +0.1 to -0.1 V dc and multiplication factor of 1.0 _____

_____
CV

CAUTION

If the valves in the Table 2B2 are not configured in the order given, an alarm initiation is possible.

[9] **IMPLEMENT** configuration changes in TABLE 2B2 in the sequence listed (top-to-bottom), **AND**

DOCUMENT performance. _____

Appendix J
(Page 3 of 6)

Diesel Generator Drag Start Test With Air Start Motors Isolated For Engine 2B2

Date _____

1.0 DG DRAG START TEST (continued)

TABLE 2B2[2]

		VERIFICATIONS			
		CONFIGURATION CHANGE		RETURN TO NORMAL	
AFFECTED COMPONENT	CONFIGURATION CHANGE DESCRIPTION	OPS/ DATE	CV/ DATE	OPS/ DATE	IV/ DATE
2-ISV-82-551B2-B	UNLOCK and CLOSE				
2-ISV-82-559B2-B	UNLOCK and CLOSE				
2-ISV-82-554B2-B	UNLOCK and CLOSE				
2-ISV-82-562B2-B	UNLOCK and CLOSE				
2-LOV-82-552B2-B	OPEN				
2-LOV-82-560B2-B	OPEN				

[10] **MANUALLY ACTUATE** each of the following solenoid valves by LIFTING the "T" handle to VENT residual downstream air pressure, **THEN**

RELEASE "T" handle:

2-FSV-82-251, AIR START SOL VLV ENG 2B2 _____

2-FSV-82-261, AIR START SOL VLV ENG 2B2 _____

[11] **PLACE** 2-HS-57-74, DG SYNC SWITCH [0-M-26], in SYN. _____

[12] **NOTIFY** UO that DG will be starting,

[13] **ENSURE** personnel are in communication to time interval from DG start initiation until required voltage and frequency are obtained. _____

Appendix J
(Page 4 of 6)

Diesel Generator Drag Start Test With Air Start Motors Isolated For Engine 2B2

Date _____

1.0 DG DRAG START TEST (continued)

[14] **DISPATCH** personnel to monitor engine 2B1 and 2B2 air start motors during diesel start. _____

[15] **START** recorder. _____

[16] **PROCEED** with countdown sequence of 3, 2, 1, START, **THEN**

PRESS 2-HS-82-106A, EMERGENCY START [0-M-26], to initiate DG start. _____

[17] **RECORD** Time of engine start.

Time:_____ _____

[18] **MONITOR** 2-EI-82-94, INCOMING VOLTAGE, **AND**

2-XI-82-92, INCOMING FREQUENCY [0-M-26]. _____

[19] **WHEN** volts and Frequency are stable, **THEN**

STOP recorder. _____

[20] **RECORD** from recorder, the Time required for voltage to reach 6800V, and frequency 58.8 Hz.

Time: _____ Seconds _____ _____

[21] **VERIFY** from recorder that DG voltage was at least 6800V with frequency at least 58.8 Hz within 10 seconds from DG start. **(Acc Crit)** _____

[22] **VERIFY** air start motors (4) pinions **NOT** ENGAGED with flywheel during startup.

A. Engine 2B2 left bank air start motors. _____

B. Engine 2B2 right bank air start motors. _____

Appendix J
(Page 5 of 6)

Diesel Generator Drag Start Test With Air Start Motors Isolated For Engine 2B2

Date _____

1.0 DG DRAG START TEST (continued)

[23] **VERIFY** air start motors (4) pinions ENGAGED with flywheel during startup, **THEN**

DISENGAGE.

A. Engine 2B1 left bank air start motors. _____

B. Engine 2B1 right bank air start motors. _____

CAUTION

86 LOR relay cannot be reset if Red light above 86 LOR, is lit.

[24] **RESET** 2-RLY-82-86LOR2, DG 2B-B EMERGENCY START LOCKOUT [2-ARB-82-B/1]. _____

[25] **ENSURE** ES2BY Amber light is LIT [2-PNL-211-B-B]. _____

[26] **PLACE** 2-HS-57-74, DG SYNC switch [0-M-26] in OFF, **AND** _____

IF overspeed trip test is to be performed, **THEN**

PERFORM Section 7.1.2 of this MI, **OR**

PERFORM Section 7.1.3 of applicable MI. _____

[27] **SHUT DOWN** DG in accordance with SOI-82.04. _____

[28] **RETURN** components in Table 2B2 to normal configuration using the reverse sequence (bottom-to-top), **AND**

DOCUMENT performance. _____

[29] **TURN OFF** the DG-DAQ computer. _____

[30] **TURN OFF** the SCXI box. _____

[31] **TURN OFF** the current probe box. _____

Appendix J
(Page 6 of 6)

Diesel Generator Drag Start Test With Air Start Motors Isolated For Engine 2B2

Date _____

1.0 DG DRAG START TEST (continued)

[32] **REMOVE** the PK test block from TB1**, AND**

REINSTALL the cover. _____

_____
IV

[33] **REMOVE** the current probe from the wire at ES2BY relay. _____

[34] **NOTIFY** SRO/Test Director that the DG-DAQ has been removed from the DG control circuits. _____

Appendix K
(Page 1 of 1)

CAMSHAFT OVERSPEED TRIP LINKAGE

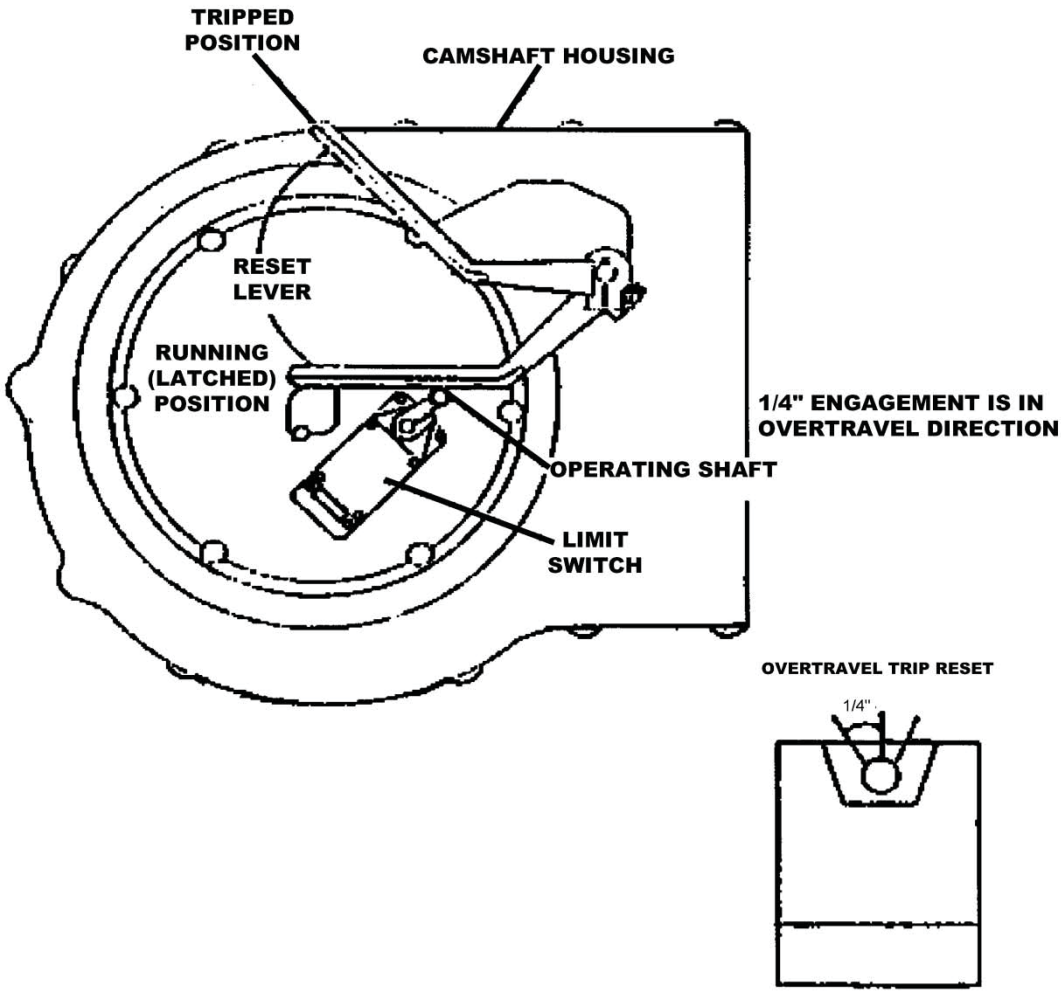

Source Notes
(Page 1 of 1)

Requirements Statement	Source Document	Implementing Statement
Revised lube oil pump coupling alignments.	WBPER960412 Action Sequence 04	1
Enhanced procedure by providing configuration sequencing of valves in tables 1A1 thru 2B2 for Appendices C thru J.	WBPER 01-006411-000	2
Add second party verification signoffs for setup of software inputs on the DG-DAQ recorder.	WB PER 03-004039-000	3
Add requirement to designate someone to monitor engine rpm during overspeed test.	WB PER 03-012056-00	4

WATTS BAR NUCLEAR PLANT

PREVENTATIVE MAINTENANCE (PM)

WORK INSTRUCTIONS

UNIT 1

DG 1A-A PROTECTIVE RELAY FUNCTIONAL TEST

PM #: 600108453

REVISION: 4

UNID: 1-GEN-82-1A-A

WO #: WO NUMBER

Effective Date: 1-22-2015

Planning Organization: MEG, Electrical

Prepared By: Alan Franklin

Reviewed By: Terry Benson

Revision Log

Revision or Change Number	Revised By/ Date	Affected Page Numbers	Description of Revision Include PMCR/PER Number
0			Replaces MI-82.50.01
1			General Revision. Rev 1 revised order of sections to enhance performance. Deleted steps to streamline test. Added performance mode.
2			Revision 2 reformatted to current standards, changed sponsoring organizational title, added items to update tool list, deleted statement in Precautions & Limitations (B) to pull fuses 1-FU-275-R75/K3 and 1-FU-275-R75/K4, added Section to perform functional by Shutdown Board 1A-A Bus Differentials, and added annunciation Windows 195A and 280A. Added 1.0 Precautions & Limitations Section I.
3			Revision 3 revised to current standards. Changed Organizational Titles. Revised frequency. Identified section 3.2 as a Critical Section. Added steps to CONFIRM LO relays reset in Post Performance section. Added Performance references and included 0-PI-OPS-1.1, Jumper Control Process there and in the Precautions and Limitations. REF PER 140641.
4	ABF/1-22-15	ALL	Updated PM steps to current standards of NPG-SPP-07.6. Changed file name from 1220F to 600108453. Updated PM to reflect new PM template and ready for BSL. Converted to MAXIMO format. Create future Work Orders in Approved status.

SCOPE: The purpose of this Preventative Maintenance (PM) Instruction is to perform protective relay functional test for WBN-1-GEN-082-0001A-A, DIESEL GENERATOR 1A-A.

General Info:

Vendor Drawing: 0126D4093

Vendor Manual: NONE

TVA Drawings: 1-45W760-82-1, -2, -4, -5, -8, 1-45W760-211-4

Commitments:

None

Recommended Tools:

6" Insulated Alignment Tool

Thin Insulating Strips (3)

Step Stool

Flashlight

Extension Cord

Field Copies (2)

Radios (3)

Patch Cable

Jumper

Recommended M&TE:

0-10A AC Variable Current Source with leads

Recommended Materials:

See Maximo

References:

0-PI-OPS-1.1 Jumper Control Process

Contract 74C2-84376

RSS: 0167, 5296, 6453, 8330, 6460, 8750, 6458, 3977, 6454, 8139, 0629

1.0 EQUIPMENT CATEGORY

1.1 See work order form and associated asset form for equipment classification.

1.2 See NEDP-4 for material requirements.

2.0 REQUIREMENTS

2.1 If directed by the work supervisor, then WO steps may be re-performed and/or worked out of sequence unless the WO contains a specific requirement that steps be performed in sequence.

3.0 PRECAUTIONS AND LIMITATIONS

3.1 If determined additional work or work outside original scope of work order is required that cannot be accomplished IAW MMDP-1, Section 3.1.2, then document information needed for re-planning in actual work performed section and return work order to planning.

3.2 The purpose of this PM is to provide instructions for performing functional tests on the protective relays associated with Diesel Generator 1A-A.

3.3 This PM requires advance scheduling with Operations and multiple test personnel will be required. The DG must be removed from service and made inoperative. Minimum configuration requirements are that the air start valves be closed and tagged on a hold order clearance and 6.9kV Shutdown Board 1A-A panel 6 ACB 1912 be in the test position and available to test close and trip.

3.4 This PM involves temporary configuration changes. If work on this PM is interrupted and equipment is left unattended for more than one hour before completion, then place a temporary equipment control tag in accordance with plant administrative instructions to identify each configuration change item or area not returned to normal.

3.5 The acceptability of the PM will be based on the correct performance of all steps. Any step that fails to respond correctly and cannot be verified shall be evaluated and documented in Section 7.0, and a Service Request (SR) initiated as applicable to correct the failure. The PM performance may proceed even though the specific step related to annunciator and display point responses were not obtained.

3.6 The test personnel performing this PM should be observant of the condition of the protective relays. Any abnormalities such as pitted contacts, broken/cracked covers, cleanliness, etc., should be noted and a work order initiated as applicable to correct the condition.

3.7 This PM may be performed in whole or part depending on the requirements of the work order or the routine schedule. It is acceptable to perform Sections out of sequence. N/A, initial, date, and explain the parts that are not performed.

3.8 This PM may be performed in all modes of operation with the conditions and restraints specified in Technical Specification Sections 3.8.1 and 3.8.2.

3.9 Relay covers will be removed as needed for testing.

3.10 This PM will operate Differential Auxiliary Relay Device 86S1A to the TRIP position. This operation will INOP automatic transfer from the Normal Supply breaker 1-BKR-211-1716/16-A to the Alternate Supply breaker 1-BKR-211-1932/1-A. While 86S1A is in the trip position the 6.9 KV Shutdown Board 1A-A will be INOPERABLE but will remain AVAILABLE.

3.11 Control electrical jumpers in accordance with 0-PI-OPS-1.1 Jumper Control Process.

4.0 PREREQUISITES

4.1 **OBTAIN** a clearance **PRIOR** to starting work, **OR ENSURE** an approved JSA has been approved to perform the work. N/A if not required.

Clearance Number: _____ ☐ JSA ☐ NONE REQUIRED

Performed By: _____ Date: _____

4.2 **OBTAIN** SM/SRO permission and UO of tests to be performed.

Performed By: _____ Date: _____

4.3 **NOTIFY** UO the following annunciator windows and display points are affected by performance of this PM.

A. Annunciator Windows

PANEL	WINDOW NO.	DESCRIPTION
0-XA-55-26A	195A	DG 1A-A AUTO START LOCKED OUT
0-XA-55-26A	197D	Operation DG Protective Relay
0-XA-55-26A	201C	6.9 SD BD 1A-A PWR FAILUREUV/OV/CONTROL
0-XA-55-L4A	280A	DG 1A-A AUTO START LOCKED OUT
0-XA-55-L4A	282D	DG Protective Relay Operation

B. Annunciator Display 1-MON-55-37

POINT	DESCRIPTION
195A	DG 1A-A AUTO START LOCKED OUT
197D	DG 1A-A Protective Relay Operation
201C	6.9 SD BD 1A-A PWR FAILURE UV/OV/CONTROL

Performed By: _____ Date: _____

NOTE

125VDC control power to DG excitation system and protective relays must be available.

4.4 **ENSURE** breakers 1-BKR-82-A/1, 1-BKR-82-A/2 and 1-BKR-82-A/3 in DG distribution panel 1-DPL-82-A are CLOSED.

Performed By: _____ Date: _____

4.5 **INDICATE** as-found position of 1-BKR-211-1912/6-A:

CONNECTED ☐ DISCONNECTED ☐ TEST ☐

OPEN ☐ CLOSED ☐ SEISMIC ☐

Performed By: _____ Date: _____

NOTE

Step 4.6 is required for Sections 5.22, 5.23 and 5.24. The 52STA test link is NOT to be installed.

4.6 **REQUEST** Operations to place 1-BKR-211-1912/6-A in TEST with test coupler installed and available to test close and trip.

Performed By: _____ Date: _____

Peer Check: _____ Date: _____

5.0 WORK INSTRUCTIONS

5.1 **ENSURE** equipment to be worked is the same as that specified in the scope of this PM Work Instruction **PRIOR** to starting work activities.

Performed By: _____ Date: _____

Peer Check: _____ Date: _____

5.2 **ENSURE** 1-RLY-82-86LOR1 DG 1A-A EMERGENCY START LOCKOUT is reset.

5.3 **ENSURE** 1-RLY-82-86GA1 DG 1A-A PROTECTIVE RELAY LOCKOUT is reset.

5.4 **INDICATE** as-found position of 0-HS-55-L4A [0-L-4].

ON ☐ OFF ☐

Performed By: _____ Date: _____

5.5 **ENSURE** 0-HS-55-L4A is in the ON position.

Performed By: _____ Date: _____

Peer Check: _____ Date: _____

5.6 **ENSURE** Window 197D is not illuminated.

5.7 **ENSURE** Window 282D is not illuminated.

5.8 Manually **TRIP** 1-RLY-82-86GA1, and

A. **ENSURE** Window 197D is illuminated.

B. **ENSURE** Window 282D is illuminated.

C. **ENSURE** Display Point 197D indicated alarm.

D. **ENSURE** Safety Shutdown Relays are picked up.

5.9 **RESET** 1-RLY-82-86GA1.

5.10 **ENSURE** Window 197D is not illuminated.

5.11 **ENSURE** Window 282D is not illuminated.

5.12 **ENSURE** Display Point 197D indicated normal.

5.13 **RESET** 1-HS-82-20 DG AUTO SAFETY SHUTDOWN RELAY-RESET [0-M-26] and **ENSURE** safety shutdown relays dropped out.

5.14 Manually **TRIP** 1-RLY-82-86LOR1.

5.15 Manually **CLOSE** and **HOLD** Device 32X contacts, and

A. **ENSURE** Window 197D is illuminated.

B. **ENSURE** Window 282D is illuminated.

C. **ENSURE** Display Point 197D indicated alarm.

5.16 Manually **OPEN** Device 32X contacts, and

A. **ENSURE** Window 197D is not illuminated.

B. **ENSURE** Window 282D is not illuminated.

C. **ENSURE** Display Point 197D indicated normal.

5.17 Manually **CLOSE** and **HOLD** Device 64X contacts, and

A. **ENSURE** Window 197D is illuminated.

B. **ENSURE** Window 282D is illuminated.

C. **ENSURE** Display Point 197D indicated alarm.

5.18 Manually **OPEN** Device 64X contacts, and

A. **ENSURE** Window 197D is not illuminated.

B. **ENSURE** Window 282D is not illuminated.

C. **ENSURE** Display Point 197D indicated normal.

5.19 Manually **CLOSE** and **HOLD** Device 40X contacts, and

A. **ENSURE** Window 197D is illuminated.

B. **ENSURE** Window 282D is illuminated.

C. **ENSURE** Display Point 197D indicated alarm.

5.20 Manually **OPEN** Device 40X contacts, and

A. **ENSURE** Window 197D is not illuminated.

B. **ENSURE** Window 282D is not illuminated.

C. **ENSURE** Display Point 197D indicated normal.

5.21 **RESET** 1-RLY-82-86LOR1.

5.22 FUNCTIONAL TEST OF DEVICE 50 INSTANTANEOUS OVERCURRENT RELAY

NOTE

This test requires that at least one of the feeders to 1-BD-211-A-A be closed and a temporary jumper be installed on panel 6 ACB 1912 52STA switch.

A. **ENSURE** that 1-BKR-211-1932/1-A, 1-BKR-211-1718/11-A, OR 1-BKR-211-1716/16-A is CLOSED.

B. **INSTALL** a jumper from Terminal Block C point 12 to Terminal Block B point 12 inside panel 6 on 1-BD-211-A-A.

Performed By: _____ Date: _____

Peer Check: _____ Date: _____

C. **CLOSE** 1-BKR-211-1912/6-A using test close pushbutton.

D. Manually **CLOSE** Device 50 A-Phase Unit contact, and

1) **CONFIRM** Device 50 A-Phase target exposed.
2) **CONFIRM** 1-BKR-211-1912/6-A tripped.

Performed By: _____ Date: _____

E. **CLOSE** 1-BKR-211-1912/6-A using test close pushbutton.

F. Manually **CLOSE** Device 50 B-Phase Unit contact, and

1) **CONFIRM** Device 50 B-Phase target exposed.
2) **CONFIRM** 1-BKR-211-1912/6-A tripped.

Performed By: _____ Date: _____

G. **CLOSE** 1-BKR-211-1912/6-A using test close pushbutton.

H. Manually **CLOSE** Device 50 C-Phase Unit contact, and

1) **CONFIRM** Device 50 C-Phase target exposed.

2) **CONFIRM** 1-BKR-211-1912/6-A tripped.

Performed By: _____ Date: _____

I. **REPLACE** cover on Device 50 and RESET targets.

J. **REMOVE** jumper from Terminal Block C point 12 and Terminal Block B point 12 inside panel 6 on 1-BD-211-A-A.

Performed By: _____ Date: _____

IV: _____ Date: _____

**********CRITICAL SECTION**********

5.23 **FUNCTIONAL TEST OF DEVICE 87S1A BUS DIFFERENTIAL RELAY**

WARNING

Removal of the following PK block covers inhibits the bus differential relay protection.

WARNING

The following eight steps if not correctly performed in sequence could result in loss of 6.9kV Shutdown Board power.

A. **REMOVE** Panel 12 PK block covers from PK blocks TD1 and TD2.

Performed By: _____ Date: _____

CV: _____ Date: _____

B. **PLACE** shorting link between terminals 7 and 8 on PK test plug and **INSERT** test plug into PK block TD1.

Performed By: _____ Date: _____

CV: _____ Date: _____

C. **CLOSE** 1-BKR-211-1912/6-A.

Performed By: _____ Date: _____

**********CRITICAL SECTION (CONT.)**********

NOTE

Annunciation windows 201C and 282D will be actuated when 5.23 D is performed. This is checked in a separate PM.

D. Manually **CLOSE** device 87S1A A-Phase Differential Relay contacts and **CONFIRM** the following:

1) Device 86S1A in trip position.

2) 1-BKR-211-1912/6-A is open.

Performed By: _____ Date: _____

E. **REPLACE** cover and **ENSURE** target is reset on 87S1A A-Phase Differential Relay.

Performed By: _____ Date: _____

CV: _____ Date: _____

F. **RESET** device 86S1A.

Performed By: _____ Date: _____

CV: _____ Date: _____

G. **REMOVE** PK test plug from PK block TD1.

H. **REPLACE** panel 12 PK block covers on PK blocks TD1 and TD2.

Performed By: _____ Date: _____

CV: _____ Date: _____

**********END CRITICAL SECTION**********

5.24 **FUNCTIONAL TEST OF DEVICE 32 REVERSE POWER RELAY**

NOTE

Device 32 contains a directional unit located at the top of the relay and a time unit located at the bottom of the relay.

A. **CLOSE** 1-BKR-211-1912/6-A using test close pushbutton.

NOTE

Diesel Generator 1A-A Safety Shutdown relays and annunciations will be actuated in Step 5.24 B.

B. Momentarily **CLOSE** Device 32 time unit contacts and

1) **CONFIRM** 1-RLY-82-86GA1 tripped.

Performed By: _____ Date: _____

2) **CONFIRM** 1-BKR-211-1912/6-A tripped.

Performed By: _____ Date: _____

3) **CONFIRM** Device 32 target exposed.

Performed By: _____ Date: _____

C. **RESET** 1-RLY-82-86GA1.

D. **RESET** 1-HS-82-20 [0-M-26].

E. **ENSURE** Device 32 target is reset.

F. **REPLACE** cover on Device 32.

5.25 FUNCTIONAL TEST OF DEVICE 46 PHASE BALANCE CURRENT RELAY

NOTE

Device 46 contains an upper and lower unit. Each unit is equipped with a left and right contact.

NOTE

Each trip of 1-RLY-82-86GA1 will cause annunciations to alarm and DG safety shutdown relays to pickup. This was checked earlier.

A. Momentarily Close Device 46 upper left contact, and

1) **CONFIRM** 1-RLY-82-86GA1 tripped.

Performed By: _____ Date: _____

2) **CONFIRM** Device 46 target exposed.

Performed By: _____ Date: _____

B. **RESET** 1-RLY-82-86GA1.

C. Momentarily **CLOSE** Device 46 upper right contact, and **CONFIRM** 1-RLY-82-86GA1 tripped.

Performed By: _____ Date: _____

D. **RESET** 1-RLY-82-86GA1.

E. Momentarily **CLOSE** Device 46 lower left contact, and **CONFIRM** 1-RLY-82-86GA1 tripped.

Performed By: _____ Date: _____

F. **RESET** 1-RLY-82-86GA1.

G. Momentarily **CLOSE** Device 46 lower right contact, and **CONFIRM** 1-RLY-82-86GA1 tripped.

Performed By: _____ Date: _____

H. **RESET** 1-RLY-82-86GA1.

I. **RESET** 1-HS-82-20 [0-M-26].

J. **ENSURE** Device 46 target is reset.

K. **REPLACE** cover on Device 46.

5.26 FUNCTIONAL TEST OF DEVICE 40 LOSS OF FIELD RELAY

NOTE

Device 40 contains a top directional unit, a middle distance unit, and a bottom undervoltage unit.

NOTE

Each trip of 1-RLY-82-86GA1 will cause annunciations to alarm and DG safety shutdown relays to pickup. This was checked earlier.

A. **ENSURE** 1-HS-82-29B Loss of Field Cutout Switch [LFS switch, located on 1-PNL-82-A] is ON.

B. **ENSURE** "Loss of Field" red alarm light [1-PNL-82-A] is not illuminated.

C. Manually **CLOS**E bottom unit right hand contact, middle unit left contact, and top unit left contact on Device 40 simultaneously and **CONFIRM** 1-RLY-82-86GA1 tripped and Loss of Field red alarm light is illuminated while contacts are closed.

D. **PLACE** 1-HS-82-29B in CUTOUT.

E. **PLACE** 1-HS-82-29B ON.

F. **RESET** 1-RLY-82-86GA1.

G. Manually **CLOSE** bottom unit left hand contact, middle unit left contact, and top unit left contact on Device 40 simultaneously, and

1) **CONFIRM** Device 40 target exposed.

2) **CONFIRM** 1-RLY-82-86GA1 tripped.

Performed By: _____ Date: _____

H. **PLACE** 1-HS-82-29B in CUTOUT.

I. **ENSURE** Device 40 target unit is dropped out and target reset.

J. **PLACE** 1-HS-82-29B ON.

K. **RESET** 1-RLY-82-86GA1.

L. **RESET** 1-HS-82-20 [0-M-26].

M. **REPLACE** cover on Device 40.

5.27 FUNCTIONAL TEST OF DEVICE 87 DIFFERENTIAL RELAY

NOTE

Device 87 disconnect switches are numbered 1 to 10 on the bottom left to right and 11 to 20 on the top right to left.

NOTE

Each trip of 1-RLY-82-86GA1 will cause annunciations to alarm and DG safety shutdown relays to pickup. This was checked earlier.

A. **OPEN** Device 87 disconnect switches 3, 17, and 19 and ISOLATE with insulating strips

B. Manually **CONNECT** AC current source to relay side of switches 3 and 17.

C. **APPLY** 0.2 A to relay, and

1) **CONFIRM** Device 87 target light is illuminated.
2) **CONFIRM** 1-RLY-82-86GA1 tripped.

Performed By: _____ Date: _____

D. Manually **REMOVE** AC current source from relay.

E. **REMOVE** insulating strips and **CLOSE** Device 87disconnect switches 3, 17, and 19.

F. **RESET** Device 87 target light.

G. **RESET** 1-RLY-82-86GA1.

H. **OPEN** Device 87 disconnect switches 4, 13, and 15 and **ISOLATE** with insulating strips

I. Manually **CONNECT** AC current source to relay side of switches 4 and 13.

J. **APPLY** 0.2 A to relay, and

1) **CONFIRM** Device 87 target light is illuminated.

2) **CONFIRM** 1-RLY-82-86GA1 is tripped.

Performed By: _____ Date: _____

K. Manually **REMOVE** AC current source from relay.

L. **REMOVE** insulating strips and **CLOSE** Device 87 disconnect switches 4, 13, and 15.

M. **RESET** Device 87 target light.

N. **RESET** 1-RLY-82-86GA1.

O. **OPEN** Device 87 disconnect switches 5, 7, and 9 and **ISOLATE** with insulating strips.

P. Manually **CONNECT** AC current source to relay side of switches 5 and 7.

Q. **APPLY** 0.2 A to relay, and

1) **CONFIRM** Device 87 target light is illuminated.

2) **CONFIRM** 1-RLY-82-86GA1 tripped.

Performed By: _____ Date: _____

R. Manually **REMOVE** AC current source from relay.

S. **REMOVE** insulating strips and **CLOSE** Device 87 disconnect switches 5, 7, and 9.

T. **RESET** Device 87 target light.

U. **REPLACE** cover on Device 87.

V. **RESET** 1-RLY-82-86GA1.

W. **RESET** 1-HS-82-20.

5.28 FUNCTIONAL TEST OF DEVICE 51 OVERCURRENT RELAY

A. Manually **CLOSE** and **HOLD** Device 51 contact, and
   1) **CONFIRM** Device 51 target exposed.
   2) **ENSURE** Window 197D is illuminated.
   3) **ENSURE** Window 282D is illuminated.
   4) **ENSURE** Display Point 197D indicated alarm.

B. **RELEASE** Device 51 contact, and
   1) **RESET** Device 51 target.
   2) **ENSURE** Window 197D is not illuminated.
   3) **ENSURE** Window 282D is not illuminated.
   4) **ENSURE** Display Point 197D indicated normal.

C. **REPLACE** cover on Device 51.

5.29 **FUNCTIONAL TEST OF DEVICE 59N NEUTRAL OVERVOLTAGE RELAY**

A. Manually **CLOSE** and **HOLD** Device 59N contact, and

1) **CONFIRM** Device 59N target exposed.
2) **ENSURE** Window 197D is illuminated.
3) **ENSURE** Window 282D is illuminated.
4) **ENSURE** Display Point 197D indicated alarm.

B. **RELEASE** Device 59N contact, and

1) **RESET** Device 59N target.
2) **ENSURE** Window 197D is not illuminated.
3) **ENSURE** Window 282D is not illuminated.
4) **ENSURE** Display Point 197D indicated normal.

C. **REPLACE** cover on Device 59N.

5.30 FUNCTIONAL TEST OF DEVICE 64 DC FIELD GROUND DETECTOR RELAY

NOTE

Field Ground Detected red alarm light is reset by pushbutton on 1-PNL-82-A/2. Depressing this pushbutton may cause any alarm that was previously in to alarm again both locally and in the control room.

A. **ENSURE** Field Ground Detected red alarm light [1-PNL-82-A/2] is not illuminated.

B. Manually **CLOSE** and **HOLD** Device 64 left hand contact, and
   1) **ENSURE** Field Ground Detected red alarm light is illuminated.
   2) **ENSURE** Window 197D is illuminated.
   3) **ENSURE** Window 282D is illuminated.
   4) **ENSURE** Display Point 197D indicated alarm.

C. **RELEASE** Device 64 left hand contact, and
   1) **ENSURE** Field Ground Detected red alarm light is not illuminated.
   2) **ENSURE** Window 197D is not illuminated.
   3) **ENSURE** Window 282D is not illuminated.
   4) **ENSURE** Display Point 197D indicated normal.

D. Manually **CLOSE** and **HOLD** Device 64 right hand contact, and
   1) **ENSURE** Field Ground Detected red alarm light is illuminated.
   2) **ENSURE** Window 197D is illuminated.
   3) **ENSURE** Window 282D is illuminated.
   4) **ENSURE** Display Point 197D indicated alarm.

E. **RELEASE** Device 64 right hand contact, and

1) **ENSURE** Field Ground Detected red alarm light is not illuminated.
2) **ENSURE** Window 197D is not illuminated.
3) **ENSURE** Window 282D is not illuminated.
4) **ENSURE** Display Point 197D indicates normal.

F. **REPLACE** cover on Device 64.

5.31 **FUNCTIONAL TEST OF DEVICES 51VA, 51VB, AND 51VC VOLTAGE CONTROLLED OVERCURRENT RELAYS**

NOTE

Devices 51V contain a directional unit located at the top of the relay and a time unit located at the bottom of the relay.

A. Manually **CLOSE** and **HOLD** Device 51VA Time Unit contact, and

1) **CONFIRM** Device 51VA target exposed.
2) **ENSURE** Window 197D is illuminated.
3) **ENSURE** Window 282D is illuminated.
4) **ENSURE** Display Point 197D indicated alarm.

B. **RELEASE** Device 51VA Time Unit contact, and

1) **RESET** Device 51VA target.
2) **ENSURE** Window 197D is not illuminated.
3) **ENSURE** Window 282D is not illuminated.
4) **ENSURE** Display Point 197D indicated normal.

C. Manually **CLOSE** and **HOLD** Device 51VB Time Unit contact, and

1) **CONFIRM** Device 51VB target exposed.
2) **ENSURE** Window 197D is illuminated.
3) **ENSURE** Window 282D is illuminated.
4) **ENSURE** Display Point 197D indicated alarm.

D. **RELEASE** Device 51VB Time Unit contact, and
   1) **RESET** Device 51VB target.
   2) **ENSURE** Window 197D is not illuminated.
   3) **ENSURE** Window 282D is not illuminated.
   4) **ENSURE** Display Point 197D indicated normal.

E. Manually **CLOSE** and **HOLD** Device 51VC Time Unit contact, and
   1) **CONFIRM** Device 51VC target exposed.
   2) **ENSURE** Window 197D is illuminated.
   3) **ENSURE** Window 282D is illuminated.
   4) **ENSURE** Display Point 197D indicated alarm.

F. **RELEASE** Device 51VC Time Unit contact, and
   1) **RESET** Device 51VC target.
   2) **ENSURE** Window 197D is not illuminated.
   3) **ENSURE** Window 282D is not illuminated.
   4) **ENSURE** Display Point 197D indicated normal.

G. **REPLACE** cover on Device 51VA.

H. **REPLACE** cover on Device 51VB.

I. **REPLACE** cover on Device 51VC.

5.32 **FUNCTIONAL TEST OF DEVICE 59 AC OVERVOLTAGE RELAY**

A. Manually **CLOSE** and **HOLD** Device 59 contact and **ENSURE** Overvoltage red light [1-PNL-82-A] is illuminated.

B. **RELEASE** Device 59 contact and **ENSURE** Overvoltage red light is not illuminated.

C. **REPLACE** cover on Device 59 and **ENSURE** target is reset.

5.33 **CONFIRM** all work is complete and component is ready for PMT.

Performed By: _____ Date: _____

6.0 POST MAINTENANCE TEST

6.1 Maintenance Test:

A. None Required

6.2 Return to Operability Test (RTO): as recommended by planning

A. None Required

6.3 Response Time Testing (RTT):

A. None Required

6.4 Additional RTO/RTT Testing as Required by Operations:

A. **PERFORM** additional RTO/RTT testing as required by operations as follows:

IF no additional RTO/RTT is required, **THEN N/A** below signatures, **ELSE RECORD** additional test(s) below.

_____

_____

_____

Additional RTO PMT *added* by

SRO_____ Date: _____

Additional RTO PMT *approved* by

SRO_____ Date: _____

7.0 POST WORK ACTIVITIES

7.1 **RETURN** 1-BKR-211-1912/6-A to as-found position or as directed by Operations, and **INDICATE** as-left position of 1-BKR-211-1912/6-A.

CONNECTED ☐ DISCONNECTED ☐ TEST ☐

OPEN ☐ CLOSED ☐ SEISMIC ☐

Performed By: _____ Date: _____

Peer Check: _____ Date: _____

7.2 **CONFIRM** all relay plugs and covers installed, targets reset, and auxiliary relays reset.

Performed By: _____ Date: _____

Peer Check: _____ Date: _____

7.3 **CONFIRM** test coupler removed.

Performed By: _____ Date: _____

7.4 **CONFIRM** that all relay cases and covers are in good state of cleanliness.

Performed By: _____ Date: _____

7.5 **RETURN** 0-HS-55-L4A [0-L-4] to as-found position or as directed by Operations, and **INDICATE** as-left position:

ON ☐ OFF ☐

Performed By: _____ Date: _____

7.6 **REQUEST** OPS to release hold order.

Performed By: _____ Date: _____

7.7 **ENSURE** 1-RLY-82-86LOR1 DG 1A-A EMERGENCY START LOCKOUT is reset.

Performed By: _____ Date: _____

Peer Check: _____ Date: _____

7.8 **ENSURE** 1-RLY-82-86GA1 DG 1A-A PROTECTIVE RELAY LOCKOUT is reset.

Performed By: _____ Date: _____

Peer Check: _____ Date: _____

7.9 **NOTIFY** SM/SRO and UO that work is complete.

Performed By: _____ Date: _____

7.10 **CONFIRM** that all sign-off entries are complete or N/A.

Performed By: _____ Date: _____

7.11 **IF** any unacceptable condition found during performance of this PM is not corrected, **THEN RECORD** "AS-FOUND" condition, and **CONTACT** responsible engineer for evaluation and corrective action. N/A if not required.

Engineer Notified: _____

Performed By: _____ Date: _____

WATTS BAR NUCLEAR PLANT

PREVENTATIVE MAINTENANCE (PM)

WORK INSTRUCTIONS

UNIT 1

6900V Diesel Generator 1A-A Differential Relay Calibration Test

PM #: 600108466

REVISION: 2

UNID: 1-GEN-082-0001A-A

WO #: WO NUMBER

Effective Date: 1-20-15

Planning Organization: MEG, Electrical

Prepared By: T. Benson

Reviewed By: A. Franklin

Revision Log

Revision or Change Number	Revised By/ Date	Affected Page Numbers	Description of Revision Include PMCR/PER Number
0	Previously Approved	All	Replaces MI-82.069.
1	Previously Approved	All	Deletes all references to the Carbon Pile method of test, adds 2nd Party / Concurrent verification requirements for relay removal and re-installation, and performs minor reformatting.
2	TAB 01/14/15	All	PMUG 0440W Converted to new format Assigned 600108466 as new PM Number

SCOPE: The purpose of this Preventative Maintenance (PM) Instruction is to 6900V Diesel Generator 1A-A Differential Relay Calibration Test.

General Info:

Vendor Drawing: None

Vendor Manual: WBN-VTM-AS08-0010

TVA Drawings: 1-45W760-82-1 and 1-45W760-82-5

Commitments:

None

Recommended Tools:

Standard tool kit

Various test leads

Westinghouse stand and plug

Recommended M&TE:

Doble Relay Test Set(s)

DC Voltmeter

Dranetz 325 Polymeter or equivalent

Recommended Materials:

Glass Cleaner

Towels

Gang Trip Relay (Stand-In)

125 Vdc Power Supply (Sorensen or equivalent)

Controller

References:

TVA Field Test Manual, Volume 1, Book 1.
Relay Setting Sheet (RSS) 6458, dated 07-18-79.

1.0 EQUIPMENT CATEGORY

1.1 See work order form and associated asset form for equipment classification.

1.2 See NEDP-4 for material requirements.

2.0 REQUIREMENTS

2.1 If directed by the work supervisor, then WO steps may be re-performed and/or worked out of sequence unless the WO contains a specific requirement that steps be performed in sequence.

3.0 PRECAUTIONS AND LIMITATIONS

3.1 This Instruction provides detailed steps to calibrate the Device 87 Differential Relay associated with Diesel Generator (DG) 1A-A.

3.2 The differential relay may be calibrated only when DG 1A-A can be inoperable. Removal of differential relay may cause DG 1A-A to be inoperable.

3.3 The use of duplicate M&TE for double verification of reading is recommended.

3.4 Protest and Doble Relay Test Sets may be used to calibrate relay.

3.5 Do not exceed 30 amps applied for test purposes.

3.6 Any test current over continuous rating (20 A restraint and 10 A operating) should not be applied for more than 31 seconds.

3.7 While making adjustments to restraint resistors, do not exceed the continuous current rating of the restraint or operating circuits.

3.8 Device 87 Differential Relay is located on 1-ARB-082-A/1A.

3.9 As-left relay data is to be within ± 5% of setting for minimum pickup and pickup at 5 Amps restraint.

3.10 Responsible Engineer should be notified as soon as possible if relay cannot be calibrated to ± 5%.

3.11 Steps may be repeated as necessary.

3.12 If determined additional work or work outside original scope of work order is required that cannot be accomplished IAW MMDP-1, Section 3.1.2, then document information needed for re-planning in actual work performed section and return work order to planning.

4.0 PREREQUISITES

4.1 **OBTAIN** a clearance **PRIOR** to starting work, **OR ENSURE** an approved JSA has been approved to perform the work. N/A if not required.

Clearance Number: _____ ☐ JSA ☐ NONE REQUIRED

Performed By: _____ Date: _____

4.2 **OBTAIN** SM / SRO permission and **NOTIFY** UO of tests to be performed.

4.3 **RECORD** plant mode of operation: _____

5.0 WORK INSTRUCTIONS

5.1 **ENSURE** equipment to be worked is the same as that specified in the scope of this PM Work Instruction **PRIOR** to starting work activities.

Performed By: _____ Date: _____

Peer Check: _____ Date: _____

5.2 **REMOVE** cover and Device 87 Relay from panel 1-ARB-082-A/1A.

Performed By: _____ Date: _____

Peer Check by: _____ Date:_____

5.3 Visually **INSPECT** relay for broken or damaged posts, loose connections, and capacitor electrolyte leakage.

NOTE

Contact status may be monitored via trip indicator light on relay except during operational test where gang trip relay will be used.

5.4 **PASS** operating current through Studs 3, 4, and 5 using the test circuit for Phase 1 shown in Appendix A.

5.5 **CHECK** and **RECORD** the as-found Phase 1 minimum pickup current in Appendix B.

5.6 **IF** the reading is outside the acceptable range, **THEN**

A. **DISCONNECT** the 125 Vdc from the relay.

B. **ADJUST** the top left resistor (rear view of relay) as needed.

C. **CONNECT** the 125 Vdc to the relay.

5.7 **CHECK** and **RECORD** the as-left Phase 1 minimum pickup current in Appendix B.

5.8 **CHECK** and **RECORD** the as-found Studs 3, 4, and 5 operating current required for Phase 1 pickup with 5 Amps restraint current passing through Stud 19 in Appendix B.

5.9 **IF** reading is outside the acceptable range, **THEN**

A. **DISCONNECT** the 125 Vdc from the relay.

B. **ADJUST** the top right resistor (rear view of relay) as needed.

C. **CONNECT** the 125 Vdc to the relay.

5.10 **CHECK** and **RECORD** the as-left Studs 3, 4, and 5 operating current required for Phase 1 pickup with 5 Amps restraint current passing through Stud 19 in Appendix B.

5.11 **CHECK** and **RECORD** the Studs 3, 4, and 5 operating current required for Phase 1 pickup with 10, 15, and 20 Amps restraint current passing through Stud 19 in Appendix B.

5.12 **ALTER** the test circuit connections shown in Appendix A by placing the return test lead on Stud 19 and the restraint test lead on Stud 17.

5.13 **CHECK** and **RECORD** the Studs 3, 4, and 5 operating current required for Phase 1 pickup with restraint currents of 5, 10, 15 and 20 Amps passing through Stud 17 in Appendix B.

5.14 **RESET** the gang trip relay.

5.15 **RESET** the trip indicator light on the relay.

5.16 **INCREASE** the operate current to the relay through Studs 3, 4, and 5 above 0.14 Amps, and **CONFIRM** the gang trip relay is **TRIPPED** and the trip indicator light is **LIT**.

Performed By: _____ Date: _____

5.17 **PASS** operating current through Studs 3, 4, and 5 using the test circuit for Phase 2 shown in Appendix A.

5.18 **DETERMINE** and **RECORD** the as-found Phase 2 minimum pickup current in Appendix B.

5.19 **IF** the reading is outside the acceptable range, **THEN**

A. **DISCONNECT** the 125 Vdc from the relay.

B. **ADJUST** the middle left resistor (rear view of relay) as needed.

C. **CONNECT** the 125 Vdc to the relay.

5.20 **CHECK** and **RECORD** the as-left Phase 2 minimum pickup current in Appendix B.

5.21 **CHECK** and **RECORD** the as-found Studs 3, 4, and 5 operating current required for Phase 2 pickup with 5 Amps restraint current passing through Stud 15 in Appendix B.

5.22 **IF** reading is outside the acceptable range, **THEN**

A. **DISCONNECT** the 125 Vdc from the relay.

B. **ADJUST** the middle right resistor (rear view of relay) as needed.

C. **CONNECT** the 125 Vdc to the relay.

5.23 **CHECK** and **RECORD** as-left Studs 3, 4, and 5 operating current required for Phase 2 pickup with 5 Amps restraint current passing through Stud 15 in Appendix B.

5.24 **CHECK** and **RECORD** the Studs 3, 4, and 5 operating current required for Phase 2 pickup with 10, 15, and 20 Amps restraint current passing through Stud 15 Appendix B.

5.25 **ALTER** the test circuit connection shown in Appendix A by placing the return test lead on Stud 15 and the restraint test lead on Stud 13.

5.26 **CHECK** and **RECORD** the Studs 3, 4, and 5 operating current required for Phase 2 pickup with 5, 10, 15, and 20 Amps restraint current passing through Stud 13 in Appendix B.

5.27 **RESET** the gang trip relay.

5.28 **RESET** the trip indicator light on the relay.

5.29 **INCREASE** the operating current to the relay through studs 3, 4, and 5 above 0.14 Amps, and **CONFIRM** the gang trip relay is **TRIPPED** and the trip indicator light is **LIT**.

Performed By: _____ Date: _____

5.30 **PASS** operating current through Studs 3, 4, and 5 using the test circuit for Phase 3 shown in Appendix A.

5.31 **CHECK** and **RECORD** the as-found Phase 3 minimum pickup current in Appendix B.

5.32 **IF** the reading is outside the acceptable range, **THEN**

A. **DISCONNECT** the 125 Vdc from the relay.

B. **ADJUST** the bottom left resistor (rear view of relay) as needed.

C. **CONNECT** the 125 Vdc to the relay.

5.33 **CHECK** and **RECORD** the as-left Phase 3 minimum pickup current in Appendix B.

5.34 **CHECK** and **RECORD** as-found Studs 3, 4, and 5 operating current required for Phase 3 pickup with 5 Amps restraint passing through Stud 9 in Appendix B.

5.35 **IF** reading is outside the acceptable range, **THEN**

A. **DISCONNECT** the 125 Vdc from the relay.

B. **ADJUST** the bottom right resistor (rear view of relay) as needed.

C. **CONNECT** the 125 Vdc to the relay.

5.36 **CHECK** and **RECORD** as-left Studs 3, 4, and 5 operating current required for Phase 3 pickup with 5 Amps restraint current passing through Stud 9 in Appendix B.

5.37 **CHECK** and **RECORD** the Studs 3, 4, and 5 operating current required for Phase 3 pickup with 10, 15, and 20 Amps restraint current passing through Stud 9 in Appendix B.

5.38 **ALTER** the test circuit connection shown in Appendix A by placing the return test lead on Stud 9 and the restraint test lead on Stud 7

5.39 **CHECK** and **RECORD** the Studs 3, 4 and 5 operating current required for Phase 3 pickup with restraint currents of 5, 10, 15, and 20 Amps passing through Stud 7 in Appendix B.

5.40 **RESET** the gang trip relay.

5.41 **RESET** the trip indicator light on the relay.

5.42 **INCREASE** the operating current to the relay through studs 3, 4, and 5 above 0.14 Amps, and **CONFIRM** the gang trip relay is **TRIPPED** and the trip indicator light is **LIT**.

Performed By: _____ Date: _____

5.43 **ENSURE** relay data is within acceptable range.

5.44 **ENSURE** relay cover is in a good state of cleanliness.

5.45 **RETURN** relay to panel 1-ARB-082-A/1A and **CLOSE** all test switches except test switch No. 1 (red handle).

5.46 **ENSURE** trip indicator light is NOT LIT.

5.47 **CLOSE** test switch No. 1 (red handle) and **REPLACE** cover on Device 87 Differential Relay.

Performed By: _____ Date: _____

Peer Check by: _____ Date:_____

5.48 **CONFIRM** all work is complete and component is ready for PMT.

Performed By: _____ Date: _____

6.0 POST MAINTENANCE TEST

6.1 Maintenance Test:

A. None Required

6.2 Return to Operability Test (RTO): as recommended by planning

A. None Required

6.3 Response Time Testing (RTT):

A. None Required

6.4 Additional RTO/RTT Testing as Required by Operations:

A. **PERFORM** additional RTO/RTT testing as required by operations as follows:

IF no additional RTO/RTT is required, **THEN N/A** below signatures, **ELSE RECORD** additional test(s) below.

_____

_____

_____

Additional RTO PMT *added* by

SRO_____ Date: _____

Additional RTO PMT *approved* by

SRO_____ Date: _____

7.0 POST WORK ACTIVITIES

7.1 **NOTIFY** UO that testing is complete on this Instruction.

7.2 **NOTIFY** SM / SRO that tests are complete on this Instruction.

7.3 **IF** any unacceptable condition found during performance of this PM is not corrected, then **RECORD** as found condition, and **RETURN** to supervision for evaluation and corrective action.

Comments: _____

_____

_____

_____

APPENDIX A
Page 1 of 1

WESTINGHOUSE TYPE SA-1 DIFFERENTIAL RELAY TEST CONNECTIONS

Doble Relay Test Sets Method of Test:

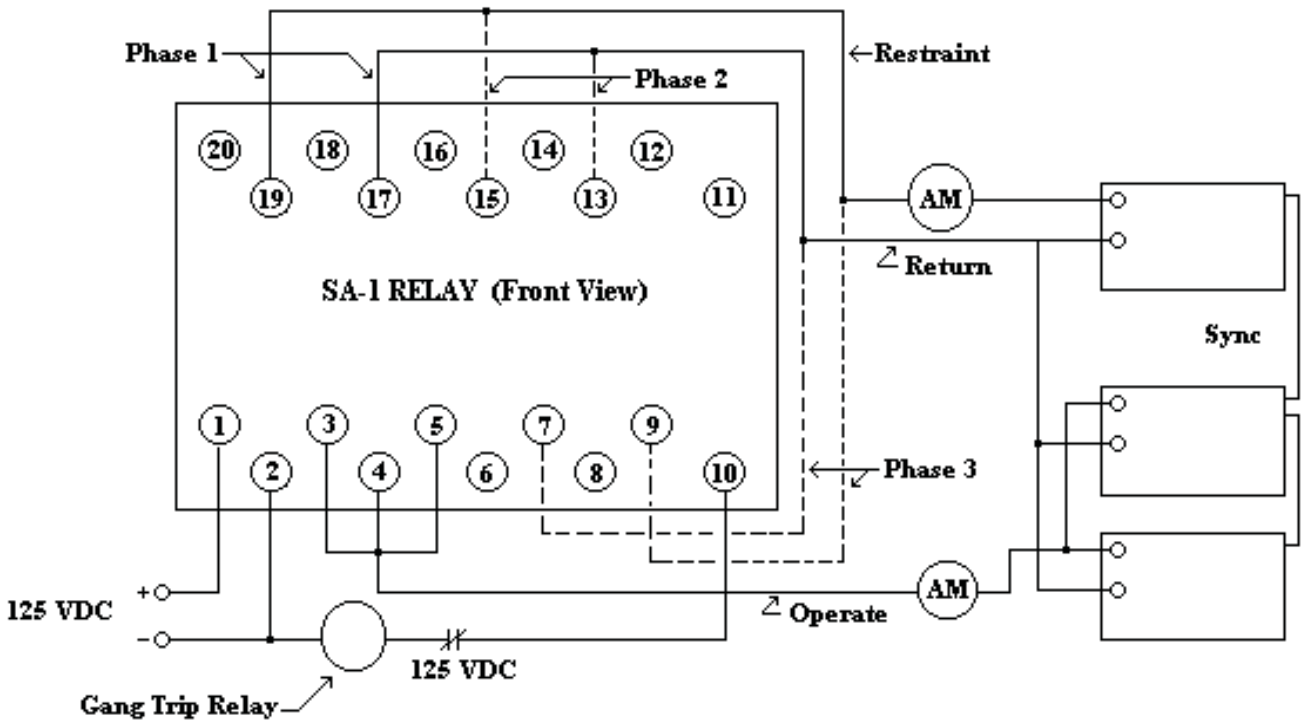

Doble sets are shown connected in parallel. Test sets may be used alone if one set will supply sufficient current. Computer controller may also be used to run tests.

APPENDIX B
Page 1 of 1

DEVICE 87 DIFFERENTIAL RELAY TEST DATA

PHASE	RESTRAINT CURRENT		INSTR MANUAL OPER CURR VALUE	ACCEPTABLE RANGE	OPERATE CURRENT (STUDS 3, 4, AND 5)			
	STUD	APPLIED			STEP	AS-FOUND	STEP	AS-LEFT
1	19	0	0.140	0.133 to 0.147	5.5	_____	5.7	_____
	19	5	0.250	0.240 to 0.260	5.8	_____	5.10	_____
	19	10	1.1	N/A	N/A	N/A	5.11	_____
	19	15	2.5	N/A	N/A	N/A	5.11	_____
	19	20	4.5	N/A	N/A	N/A	5.11	_____
	17	5	0.250	N/A	N/A	N/A	5.13	_____
	17	10	1.1	N/A	N/A	N/A	5.13	_____
	17	15	2.5	N/A	N/A	N/A	5.13	_____
	17	20	4.5	N/A	N/A	N/A	5.13	_____
2	15	0	0.140	0.133 to 0.147	5.18	_____	5.20	_____
	15	5	0.250	0.240 to 0.260	5.21	_____	5.23	_____
	15	10	1.1	N/A	N/A	N/A	5.24	_____
	15	15	2.5	N/A	N/A	N/A	5.24	_____
	15	20	4.5	N/A	N/A	N/A	5.24	_____
	13	5	0.250	N/A	N/A	N/A	5.26	_____
	13	10	1.1	N/A	N/A	N/A	5.26	_____
	13	15	2.5	N/A	N/A	N/A	5.26	_____
	13	20	4.5	N/A	N/A	N/A	5.26	_____
3	9	0	0.140	0.133 to 0.147	5.31	_____	5.33	_____
	9	5	0.250	0.240 to 0.260	5.34	_____	5.36	_____
	9	10	1.1	N/A	N/A	N/A	5.37	_____
	9	15	2.5	N/A	N/A	N/A	5.37	_____
	9	20	4.5	N/A	N/A	N/A	5.37	_____
	7	5	0.250	N/A	N/A	N/A	5.39	_____
	7	10	1.1	N/A	N/A	N/A	5.39	_____
	7	15	2.5	N/A	N/A	N/A	5.39	_____
	7	20	4.5	N/A	N/A	N/A	5.39	_____

Visual Inspection performed Yes ☐ No ☐