REGULATORY INFORMATION DISTRIBUTION SYSTEM (RIDS)

ACCESSION NBR:8007280544 DOC.DATE: 80/07/23 NOTARIZED: NO DOCKET #
FACIL:50-269 Oconee Nuclear Station, Unit 1, Duke Power Co. 05000269
50-270 Oconee Nuclear Station, Unit 2, Duke Power Co. 05000270
50-287 Oconee Nuclear Station, Unit 3, Duke Power Co. 05000287
AUTH.NAME AUTHOR AFFILIATION
PARKER,W.O. Duke Power Co.
RECIP.NAME RECIPIENT AFFILIATION
DENTON,H.R. Office of Nuclear Reactor Regulation, Director

SUBJECT: Forwards response to recommendations in NUREG-0667, "Transient Response of B&W Designed Reactors." Based on review,no action is necessary to majority of recommendations.

DISTRIBUTION CODE: A001S COPIES RECEIVED:LTR 1 ENCL 1 SIZE: 20
TITLE: General Distribution for after Issuance of Operating Lic

NOTES:M Cunningham:all amends to FSAR & changes to Tech Specs. 05000269
M Cunningham:all amends to FSAR & changes to Tech Specs. 05000270
M Cunningham:all amends to FSAR & changes to Tech Specs. 05000287

	RECIPIENT ID CODE/NAME		COPIES LTTR	COPIES ENCL	RECIPIENT ID CODE/NAME		COPIES LTTR	COPIES ENCL
ACTION:	REID,R.	05	1	1	FAIRTILE,M.	12	12	
INTERNAL:	D/DIR,HUM FAC S		1	1	DIR,HUM FAC SFY		1	1
	I&E	12	2	2	NRC PDR	02	1	1
	OELD	14	1	0	OR ASSESS BR	19	1	0
	REG FILE	01	1	1				
EXTERNAL:	ACRS	20	16	16	LPDR	03	1	1
	NSIC	04	1	1				

JUL 29 1980

TOTAL NUMBER OF COPIES REQUIRED: LTTR 39 ENCL 37

DUKE POWER COMPANY
POWER BUILDING
422 SOUTH CHURCH STREET, CHARLOTTE, N. C. 28242

WILLIAM O. PARKER, JR.
VICE PRESIDENT
STEAM PRODUCTION

TELEPHONE: AREA 704
373-4083

July 23, 1980

Mr. Harold R. Denton, Director
Office of Nuclear Reactor Regulation
U. S. Nuclear Regulatory Commission
Washington, D. C. 20555

Attention: Mr. R. W. Reid, Chief
Operating Reactors Branch No. 4

Subject: Oconee Nuclear Station
Docket Nos. 50-269, -270, -287

Dear Sir:

Duke Power Company has reviewed NUREG-0667, "Transient Response of Babcock and Wilcox Designed Reactors," and offers the following comments on the document and the recommendations therein.

My letter of May 5, 1980 provided comments based on our review of the draft version of the report and, having reviewed the final version of the document, we consider that the comments and concerns previously provided remain valid. We have reviewed each of the recommendations, and the results of those reviews are provided in the attached.

Each attachment to this letter provides details of the Oconee design and addresses one or more of the recommendations of NUREG-0667 in light of this information. The validity and/or appropriateness of each recommendation is then provided.

Attachment 1 is an evaluation of Oconee Operating Experience. It is a detailed review of over 18 reactor years of operation of Oconee and addresses four recommendations related to operating experience (9, 10, 19, 22).

Attachment 2 addresses the design of the Oconee emergency feedwater system and the recommendations that relate to it. (1, 2)

Attachment 3 addresses the design of the integrated control system (ICS) at Oconee and the recommendations that relate to it. (5, 12)

Attachment 4 addresses procedures and operator training and the related recommendations. (11, 13, 14, 15)

A001
S
1/1

8007280544

Attachment 5 includes a description of the existing containment purge isolation system and addresses the recommendation related to this system. (8)

Attachment 6 addresses several other items for which detailed description of systems or operational experience was not required. The recommendations addressed in this attachment are 6, 7, 17, 21.

Recommendation 3 is applicable only to Toledo Edison, recommendation 4 is not applicable to Oconee, and recommendations 16, 18, 20 concern NRC Staff actions and are therefore not addressed in this submittal.

Based on our review, Duke Power concludes that in response to the majority of the recommendations, no action is deemed necessary. The bases for this conclusion are provided in the evaluations to the specific recommendations. For the remaining recommendations, Duke has already initiated efforts to address the specific areas of concern. Descriptions of these efforts are included in the evaluations of each specific recommendation. Based on our review of NUREG-0667, no additional actions in the areas of analysis, modifications, or procedures is necessary.

The evaluations provided represent extensive effort in response to the recommendations of NUREG-0667. Staff consideration of the information provided is requested prior to any requests for information or for any commitments for implementation.

Very truly yours,

William O. Parker, Jr.

RLG:scs

Attachment

ATTACHMENT 1

OCONEE NUCLEAR STATION

EVALUATION OF OPERATING EXPERIENCE

ATTACHMENT 1 - EVALUATION OF OPERATING EXPERIENCE

TABLES

FIGURES

OCONEE NUCLEAR STATION

EVALUATION OF OPERATING EXPERIENCE

1.0 INTRODUCTION

The Oconee Nuclear Station consists of three pressurized water reactors (PWR's), designated as Unit 1, Unit 2 and Unit 3. The Nuclear Steam Supply System (NSSS) utilized in each of these three units is of the Babcock and Wilcox (B&W) design. The three units became operational during 1973-'74, with initial criticality occurring on April 19, 1973, November 11, 1973 and September 5, 1974 for Unit 1, Unit 2 and Unit 3, respectively. Thus, the Oconee Nuclear Station has attained 18.2 reactor years of operation as of December 31, 1979. This report deals with the evaluation of the operating experience of the Oconee Nuclear Station during these 18.2 reactor years of operation.

Periodic evaluation of nuclear plant operating experience is an important and useful process. Such evaluations facilitate identification of problem areas, reveal the trends in the occurrence of off-normal events, and enable the formulation of bases for possible changes in design features or operating procedures to improve performance.

Factors pertinent to the evaluation of operating experience include the rate of occurrences of non-routine events, the frequency of reactor trips, the number of Licensee Event Reports (LER's), personnel error frequency, post-trip main feedwater control, post-trip pressurizer level response, post-trip system behavior, the number of significant transients, HPI actuations and auxiliary feedwater reliability. In Section 2 each of these factors is evaluated in detail.

The NRC Staff has recently completed an investigation into the transient response of B&W plants. The findings of this investigation and the accompanying recommendations are embodied in NUREG-0667. Apparently, the NRC Staff evaluation was performed within a short time span which precluded a detailed quantitative evaluation of several aspects of B&W plant performance; as a result, certain findings and conclusions significantly deviated from the actual plant performance. The extent to which the Oconee operating experience supports these findings and the validity and appropriateness of the associated recommendations for Oconee Nuclear Station are addressed in Section 3.

Section 4 contains principal conclusions of the Duke evaluation.

The data utilized in this evaluation came from the Oconee incident investigation reports and the transient monitor data files. Where necessary, information obtained from the Oconee operations personnel was also factored in. In certain cases, detailed transient analysis using the system transient analysis code RETRAN was employed to quantitatively assess the transient behavior.

2.0 OPERATING EXPERIENCE DATA AND EVALUATION

2.1 Non-Routine Events

At Oconee Nuclear Station, a formal investigation is performed whenever a non-routine event occurs. The product of this investigation is an incident investigation report which contains information on the cause of the occurrence, the sequence of events if it is a transient, safety evaluation and recommended corrective actions if appropriate. Non-routine events typically investigated include reactor trip events, turbine trip events, incidents which result in an unscheduled outage, incidents which result in damage to or loss of safety-related equipment, incidents with safety-related and/or safety-significant implications, events required to be reported to the NRC (RO's), and non-reportable Technical Specification violations.

The number of station incident investigation reports generated each year is tabulated in Table 1. The rate of occurrence of non-routine events has decreased significantly following the initial break-in period. The frequency of non-routine events appears to have leveled off since 1976 to a rate of 3.2-3.4 events per reactor-month.

2.2 Reactor Trip Frequency

In the period beginning with the initial criticality of Oconee Unit 1 on April 19, 1973, through the end of 1979, 161 reactor trips have occurred at Oconee Nuclear Station (ONS). Annual totals are presented in Table 2. Two observations can be made regarding these data.

- The frequency of reactor trips experienced at ONS improved (decreased) after an initial break-in period of operation.

- The frequency of reactor trips experienced at ONS in later years is significantly below the industry average values for PWR's reported in EPRI-265.

It is apparent from these data that the Oconee units have not been experiencing an excessive number of reactor trips, particularly in recent years.

These factual data support the contention that the Oconee reactors are no more prone to system upsets than other reactors, including those of other designs.

2.3 Reportable Occurrence Frequency

Annual totals of Reportable Occurrences (RO's) at ONS have been compiled from the Incident Investigation Reports and are presented in Table 3.

As seen from this table the average frequency of RO's for Oconee is 24.0 per reactor year for the 18.2 reactor years of operation, the initial three years of operation being characterized by a relatively higher average (29.9) with the last four years reporting a lower frequency of occurrences (21.1). This trend is consistent with the

expected behavior. Furthermore, the average frequency of RO's during 1978 for Oconee (21.0) is less than the industry average of 40.9 reported in NUREG-0667 for that year.

2.4 Personnel Error Frequency

The frequency of reportable occurrences involving personnel errors at ONS has been reviewed and the results are presented in Table 3. This information was obtained from the ONS Incident Program, which is compiled from the Incident Investigation Reports. Note that these data include personnel errors attributed to both licensed and non-licensed personnel. Additionally, the Licensee Event Reports (LER's) from 1978 and 1979 were reviewed in order to establish the number of LER's involving licensed personnel errors. This review identified a total of eight (8) LER's, four (4) in each year. The following findings are obtained from the information in Table 3.

(1) The largest number of RO's involving personnel error occurred in 1974 and 1975, during the initial period of plant operation.

(2) The rate of occurrence of Oconee RO's involving personnel error has decreased significantly in the last three years of operation.

(3) The number of Oconee LER's involving licensed personnel error during 1978 and 1979 (1.33/RY) is less than the industry average of 2.8 reported in NUREG-0667 for the comparable period.

2.5 RCS Sensitivity to Post-Trip Main Feedwater Control

Heightened concern for the perceived sensitivity of B&W-designed reactors to secondary system upsets has been expressed recently. Proper control of post-trip RCS pressure and volume is heavily dependent upon three secondary system parameters: secondary pressure, feedwater temperature and steam generator liquid level. Selected ONS reactor trips have been reviewed in an effort to evaluate the sensitivity of the RCS to main feedwater level control.

The ICS is designed to rapidly reduce main feedwater flow to the steam generators following a reactor trip in response to the decreased heat output from the reactor core. Under forced circulation conditions, the ICS is designed to control the liquid level at approximately 25 inches (minimum level). Recent operating experience indicates that the main feedwater flow reduction following a reactor trip has not been occurring as rapidly or as consistently as intended. This, in turn, has led to the concern that B&W-designed reactors may be experiencing more overcooling transients than other reactor designs.

A review of selected recent reactor trips indicates that the RCS sensitivity to steam generator liquid level is minimal. The selected trips are representative of three different feedwater flow control responses and are described below. Figures 1 through 6 contain graphs of RCS pressure, RCS T_{ave}, pressurizer level, steam generator pressure, and steam generator startup level for these three events.

Case 1

On June 11, 1979, Oconee Unit 1 experienced a main feedwater pumps trip due to an electronic card error in the EHC system which resulted in a turbine trip and anticipatory reactor trip. The auxiliary feedwater pumps started as designed. The steam generator level, after the reactor trip, was maintained at approximately 30 inches. The minimum RCS pressure, RCS T_{ave} and pressurizer level reached were 1811 psig, 553°F, and 72 inches, respectively. (See Figures 1 and 2.)

Case 2

On October 8, 1979, Oconee Unit 1 was operating at 100% FP when CR group 5 dropped into the core. The resulting reactor runback by the control system lasted approximately four (4) seconds when the reactor tripped on the pressure-temperature trip function. The steam generator level was initially rapidly reduced, as designed; however, the steam generator level decreased only to approximately 100 inches because of continued feedwater flow. Subsequently, the level gradually decreased to about 73 inches seven (7) minutes after the reactor trip. This trip represents a "moderate" overfeeding case. The minimum RCS pressure, RCS T_{ave}, and pressurizer level reached were 1728 psig, 549°F, and 32 inches, respectively. (See Figures 3 and 4.)

Case 3

On March 14, 1980, Oconee Unit 3 experienced a turbine trip and anticipatory reactor trip from 100% FP. The main feedwater level control initially reduced the water level to approximately 110 inches. Subsequently, the steam generator level rapidly increased to the high-level main feedwater pump trip setpoint. This event represents a "severe" overfeeding case. The minimum RCS pressure, RCS T_{ave}, and pressurizer level reached were 1763 psig, 547°F, and 50 inches, respectively. (See Figures 5 and 6.)

These three reactor trip events were selected because they represented a range of post-trip feedwater control responses, from the nominal minimum level control in Case 1 to the "severe" overfeeding response in Case 3. A comparison of the primary system response for the three trips reveals that the overfeeding of the steam generators did not significantly affect the RCS response. Thus, main feedwater overfeed following reactor trips is seen to have only a minor impact on the primary system for Oconee units.

2.6 Impact of Post-Trip Operator Actions on RCS Pressure and Volume Control

Following a reactor trip, the normal operator response includes actions to isolate the RCS letdown flow and to increase the makeup flow. Some concern has been expressed that these actions are necessary in order to maintain pressurizer level and to avoid frequent HPI actuation. An evaluation and analysis of the ONS post-trip RCS response have been performed to determine whether or not these actions are, in fact, necessary.

During steady state power operation the makeup and letdown flow rates are nearly equal. Following a reactor trip, the RCS volume initially contracts as more energy is removed from the system than is produced. The reactor trip emergency procedure, EP/0/A/1800/3, requires the operator to secure the letdown flow and, if pressurizer level cannot be maintained, to throttle open the HPI valve (HP-26) and start the stand-by HPI pump (B). A simplified drawing of the HPI and makeup system is shown in Figure 7.

The minimum RCS pressure and pressurizer level are reached approximately one minute after the reactor trip. If one assumes constant coolant mass during a cooldown from 579°F at 2170 psia to 550°F at 2170 psia, then the change in RCS coolant volume would be approximately 493 ft^3 or 155 inches in pressurizer level. Each HPI pump is rated at ~325 gpm for backpressures between a 1615 and 3000 psi. Based on discussions with ONS operations engineers, operator action to isolate letdown, start the second pump and to throttle open HP-26 results in a net makeup flow of approximately 300 gpm. Thus, the operator action, if taken immediately after the trip, would increase the minimum level by 10 to 12 inches of pressurizer level out of a total change of ~155 inches.

NOTE: Typically, the second makeup pump starts automatically on low RC pump seal injection flow when valve HP-26 is opened. The operator action to isolate the letdown flow usually occurs within 30 seconds of the trip.

Transient analyses using the RETRAN code have been performed in an attempt to quantify the impact of operator actions on post-trip pressure and pressurizer level response. Three calculations were performed:

Case 1

This calculation used zero makeup and letdown flow rates and corresponded to the situation involving no operator action.

Case 2

This calculation assumed a 200 gpm net makeup flow rate initiated 30 seconds after the reactor trip.

Case 3

This calculation assumed a 300 gpm net makeup flow rate initiated 30 seconds after the reactor trip.

The results of these computer calculations are presented in Figures 8, 9 and 10 which show the pressurizer level, RCS pressure, and RCS T_{ave} responses (respectively) for each of the calculations. Figure 8 shows that the impact of the makeup flow on the minimum level reached is insignificant when compared to the total level change. Similarly, the minimum RCS pressure and RCS T_{ave} are minimally affected by the

flow rate. These results also show that the operator actions enable early restoration of the pressurizer level to the nominal control band. Thus, operator actions to isolate the letdown and to increase RCS makeup are not necessary actions during typical reactor trips; however, these actions enable faster recovery of the pressurizer level in the event the transient is accompanied by other system failures or malfunctions.

2.7 Post-Trip System Transient Behavior

One means of evaluating the sensitivity of a plant for major system upsets is to review past operating experience to determine the frequency with which major plant upsets occur. The first step in such a review is the establishment of standards that provide guidelines for evaluating plant performance. These standards should be stringent enough to identify incidents that have the potential for more serious consequences as well as those incidents of an obviously serious nature. On the other hand, performance standards should be flexible enough to accommodate minor perturbations in plant performance. The standards should establish a range of desirable performance characteristics but should not prescribe performance requirements.

In order to accurately evaluate plant performance, it is necessary to select characteristics (e.g. plant parameters, system responses, or event consequences) that will be used in comparison to the standards. Additionally, it is desirable to select characteristics that are readily obtainable and that do not require detailed analyses or lengthy investigations to establish. Such a selection promotes timely evaluations.

The performance standards that were adopted for the ONS post-trip performance evaluation are presented in Table 4. These standards consist primarily of system response characteristics and are readily and accurately available to the operators. The standards will identify those reactor trips for which the plant response was other than expected or which had the potential for more serious consequences.

Of the 163 reactor trips that have occurred at ONS through June 1, 1980, nine (9) have been identified as not meeting one or more of the performance standards in Table 4. These incidents are discussed below.

1. Reactor Trip 1-2

On May 5, 1973, Oconee Unit 1 was manually tripped from approximately 18% FP when the booster and main feedwater pumps tripped on low suction pressure. The emergency feedwater pump did not start automatically and the A SG apparently dried out due to improper secondary pressure control in that loop. (The turbine bypass valve control for the A loop was in manual and the pressure setpoint did not increase on reactor trip as designed.) Approximately four (4) minutes after the initial loss of feedwater, feedwater flow to both SG was re-established at high flow rates, approximately 10^6 lb/hr at 100°F. This resulted in a rapid cooldown of the RCS and a minimum RCS pressure of ~1330 psi and a loss of pressurizer level.

2. Reactor Trip 1-5

On May 16, 1973, Oconee Unit 1 tripped on high RCS pressure from approximately 15% FP when the booster and main feedwater pumps tripped due to loss of suction pressure. The SG water inventory decreased rapidly, and the RCS temperature and pressure increased to the PORV actuation setpoint and finally to the RPS high pressure trip setpoint which tripped the reactor. The emergency feedwater pump did not receive an auto-start signal, and the SG apparently boiled dry. The emergency feedwater pump was started manually and plant recovery completed.

3. Reactor Trip 2-8

On January 4, 1974, Oconee Unit 2 suffered a loss of offsite power transient due to an erroneous activation of the breaker failure relay system which isolated the 230 KV switchyard from the grid. Emergency power was supplied by the Keowee Hydro Station. For unexplained reasons, the main steam stop valves closed and tripped the turbine which resulted in a reactor trip, apparently on high pressure. The emergency feedwater pump was started approximately seven (7) minutes after the reactor trip and rapidly filled the SG to the 95% level, corresponding to the original design setpoint for natural circulation conditions. The high liquid level in the SG combined with inadequate secondary pressure control (due to auxiliary steam loads) produced a primary cooldown from 562°F to ~424°F in less than one hour.

4. Reactor Trip 2-15

On July 11, 1974, Oconee Unit 2 was operating at 80% FP when a loss of ICS Auto power occurred, followed by the swapping of the emergency feedwater valves, a main turbine trip, and one RPS low pressure channel trip. Approximately five (5) seconds later the reactor tripped on low pressure, apparently due to the PORV failing open when the ICS auto power was lost. Engineered Safeguards channels 1 & 2 tripped approximately 15 to 25 seconds later, initiating high pressure injection, when RCS pressure decreased below 1550 psig. About 30 to 45 seconds after the power loss, ICS auto power was restored. RCS pressure had decreased to a minimum of 1450 psig. HPI returned RCS pressure to ~2200 psig within three (3) to four (4) minutes.

5. Reactor Trip 3-12

On June 13, 1975, Oconee Unit 3 was shutting down for RCP seal maintenance when the turbine was taken into manual control at approximately 19% FP. A difference between unit load demand and generated megawatts precipitated a feedwater oscillation, which in turn resulted in an RCS pressure spike to 2267 psig, opening the PORV (2255 psig setpoint). The PORV did not reseat, although the control open/closed lights did not indicate that the valve was open, and the reactor tripped on low pressure. Subsequently, the quench tank rupture disc burst and ES HPI actuation occurred. The PORV block valve was momentarily closed when RCS pressure had decreased to 1300 psig and finally closed at 800 psig. The minimum RCS average temperature was 480°F.

6. Reactor Trip 2-33

On July 12, 1976, Oconee Unit 2 was being shut down to repair a turbine steam leak when low feedwater pump discharge pressure resulted in a turbine trip and reactor trip on high pressure (from ∿15% FP). The RCS pressure increased to the PORV setpoint, and the subsequent discharge to the quench tank burst the rupture disk.

7. Reactor Trip 1-68

On December 14, 1978, Oconee Unit 1 tripped from ∿98% FP due to a short circuit in an ICS T_{ave} recorder coil. The ICS withdrew Group 7 control rods in response to the false low T_{ave} signal and the reactor tripped on pressure-temperature. Subsequently, the main feedwater pumps tripped on high discharge pressure and the emergency feedwater pump started and was quickly secured when the main feedwater pumps were reset. Subsequently, it was necessary to restart the emergency feedwater pump to feed the B SG, which had boiled dry, and later the A SG. Rapid overfilling of the SG with emergency feedwater resulted in an excessive RCS cooldown and ES Channels 1 and 2 (HPI) were actuated. The minimum RCS pressure was approximately 1430 psig.

8. Reactor Trip 1-70

On December 25, 1978, Oconee Unit 1 suffered a loss of all ICS power due to a blown fuse in the inverter. Subsequently, both main feedwater pumps tripped, and the reactor tripped on high pressure from ∿10% FP. The emergency feedwater pump started as designed but indicated a low discharge pressure. The B SG was boiled dry for approximately 15 minutes until ICS power was restored and the main feedwater pumps restarted.

9. Reactor Trip 3-35

On November 10, 1979, Oconee Unit 3 tripped on high pressure from 99% FP due to a booster pump trip. Shortly thereafter, all ICS power was lost for a period of 2.5 minutes. Inadequate secondary pressure control due to apparent turbine bypass valve maloperation and auxiliary steam loads resulted in an RCS cooldown rate in excess of 100°F/hr. The minimum RCS temperature and pressure were ∿420°F and 1660 psig, respectively.

2.8 Significant Transients

In Section 2.7, nine (9) transient events have been identified as being out of the ordinary or potentially abnormal. Of these nine events, four (4) involved improper functioning of the auxiliary feedwater system, two (2) involved failures in the PORV or its associated circuitry, one involved inadequate secondary pressure control, one involved burst quench tank rupture disc, and one was attributed to the original steam generator level setpoint (95%) for natural circulation conditions.

The deficiencies in the auxiliary feedwater system's performance is attributed to the fact that the Oconee auxiliary feedwater system, until recently, consisted of a single auxiliary feedpump which was controlled by the ICS. Major changes in the auxiliary feedwater system have been implemented recently--namely, addition of two motor-driven pumps, separation of the system from the ICS, and safety grade initiation and control. These changes will provide reliable auxiliary feedwater performance and hence will minimize the possibility of undercooling events.

With regard to the events characterized by PORV failures, several corrective actions have been implemented. These actions include modification of the control circuitry to achieve a fail-safe condition during a loss-of-control power events, relocation of the PORV valve to minimize the possibility of the valve's sticking open and the addition of positive position indication devices.

The natural circulation condition setpoint for the steam generator level has been lowered from the original design value of 95% to 50% on the operating range as a result of the January 4, 1974, event at Unit 2.

Thus, major changes in plant design features have been implemented to prevent reoccurrence of abnormal events of a repetitive nature.

The other two (2) abnormal events were due to isolated malfunctions, and in these events appropriate corrective actions were also taken.

It is expected that these actions will significantly reduce the frequency of occurrence of significant transients.

It should also be noted that a majority of these events occurred during the first three (3) years of operation at ONS, a period involving significant system adjustments and fine-tuning.

2.9 HPI Actuation Experience

The ONS incident investigation reports document five (5) occasions on which high pressure injection was automatically actuated. Only three (3) of these incidents involved HPI actuation on low RCS pressure following a reactor trip. Of the remaining two (2) incidents, one involved HPI initiation due to personnel error while the reactor was subcritical, and the other incident involved a spurious engineered safeguards system trip (high reactor building pressure) in one channel while the second channel was bypassed for calibration (no reactor trip occurred). The three (3) incidents involving HPI actuation following a reactor trip are identified in Table 5.

The operating experience at ONS indicates that HPI actuation is a rare occurrence and does not frequently occur following a reactor trip. In over 18 reactor years of operation, only three (3) such actuations have occurred, a frequency of .17 actuations/reactor-year.

2.10 Post-TMI Auxiliary Feedwater System Performance

Subsequent to installation of the post-TMI auxiliary feedwater system modifications, three (3) auxiliary feedwater system actuations have occurred (through June 1, 1980). A brief summary of these three events follow.

Reactor Trip 1-73

On June 11, 1979 Oconee Unit 1 was operating at 99% FP when all six low pressure turbine intercept valves closed due to a failed operational amplifier. This resulted in the tripping of the condensate booster pumps and both main feedwater pumps which in turn generated reactor and turbine trips. The auxiliary feedwater pumps started automatically for all three units (as designed) and the Unit 1 steam generators were supplied with feedwater and the minimum level was maintained manually. The main feedwater pumps were restarted and unit recovery completed.

Reactor Trip 3-35

On November 10, 1979 Oconee Unit 3 was operating at 99% FP when a spurious low hotwell level signal tripped the hotwell pumps, A condensate pump, and ultimately resulted in a reactor trip on high RCS pressure. Approximately 20 seconds later, ICS power was lost due to blown fuses in the ICI inverter and failure of the automatic transfer switch. The loss of ICS power resulted in the tripping of both main feedwater pumps and the start of the steam driven and motor driven auxiliary feedwater pumps. The auxiliary feedwater system supplied both steam generators until the main feedwater pumps were restarted approximately 30 minutes after the reactor trip.

Reactor Trip 3-36

On March 14, 1980 Oconee Unit 3 was operating at 100% FP when a turbine trip-reactor trip occurred. Approximately 2 minutes later, both main feedwater pumps tripped due to high level in the A steam generator and the auxiliary feedwater pumps started as designed and supplied feedwater until the main feedwater pumps were restarted 20 minutes later.

The post-TMI auxiliary feedwater system at Oconee has performed satisfactorily on the three occasions it had been required.

3.0 EVALUATION OF NUREG-0667 RELATIVE TO ONS OPERATING EXPERIENCE

In the recently completed NRC Staff evaluation of the "Transient Response of Babcock and Wilcox-Designed Reactors" (NUREG-0667), several conclusions were drawn regarding the transient operating characteristics of B&W-designed reactors. These conclusions were not supported by detailed analyses but instead were largely based on the review of limited data and on perceived operating characteristics. This section of the report will address four (4) specific recommendations in the NUREG-0667 in light of the ONS operating experience data. In this fashion the validity and/or appropriateness of the recommendations can be determined as they apply to ONS, in particular, and to the extent that ONS is representative of one class of B&W-designed reactors, as they apply to B&W 177 fuel assembly reactors, in general.

3.1 Recommendation 9

Following a reactor trip, pressurizer level should remain on scale, and system pressure should remain above the HPI actuation setpoint. The system response (e.g., secondary pressure) should be modified to meet the above two (2) objectives. Meeting these objectives should be independent of all manual operator actions (e.g., control of feedwater, letdown isolation, and startup of a makeup pump).

Evaluation

One concern expressed by this recommendation is that B&W-designed reactors are susceptible to loss of pressurizer level indication and/or HPI actuation due to reactor coolant contraction following a reactor trip. A review of operating experience at Oconee reveals that these phenomena have occurred on only four (4) occasions (three (3) HPI actuations and one (1) loss of pressurizer level event) in over 18 reactor years of operation encompassing 163 reactor trips. Two of these incidents involved PORV failure and are atypical events. The low occurrence frequencies of these types of events at Oconee does not support the Staff's contention that B&W "plants have a history of occasional secondary side malfunctions leading to reactor trips, losses of pressurizer level, and ECCS/HPI actuations". To the extent that the Oconee design is representative of B&W-designed reactors, the significance of this type of event is extremely small.

The other concern expressed by this recommendation is in regard to operator action taken to maintain pressurizer level and RCS pressure following a reactor trip. The minimum level and pressure are reached approximately one minute after the trip. As demonstrated in Section 2.6, operator action to increase the net makeup flow results in an increase in the minimum pressurizer level of approximately 6 to 12 inches. When compared to the nominal post-trip level decrease of approximately 150 inches, the impact of the operator action is seen to be of small significance. The Oconee units currently meet the intent of this recommendation and no modification to the system response is necessary.

3.2 Recommendation 10

The B&W licensees should perform sensitivity studies of possible modifications which would reduce the response of the OTSG to secondary coolant flow perturbations. Both passive and active measures should be investigated to mitigate overcooling and undercooling events.

Evaluation

The response of the OTSG to secondary coolant flow perturbations is of primary importance in its effect on the reactor coolant system. Hence, an evaluation of this recommendation may be performed by analyzing the response of the primary system to secondary coolant flow perturbations. In this regard, OTSG underfeeding events are of greater significance than overfeeding events due to the former's higher potential for resulting in core damage (due to undercooling). The risk contribution from this type of event can be significantly reduced by providing a reliable source of feedwater. Modifications to the Oconee design have resulted in a system that includes a main feedwater system, the three-pump auxiliary feedwater system, and the capability to supply secondary coolant through the emergency-emergency feedwater connections using the auxiliary service water system.

The effect of main feedwater overfeed on overcooling behavior is discussed in Section 2.5, and it has been demonstrated that the Oconee main feedwater system does not contribute significantly to the overcooling phenomenon. Excessive auxiliary feedwater flow can indeed precipitate overcooling of the RCS, particularly during reactor trips from low power conditions.

Overcooling events do not pose a significant safety hazard in and of themselves. Recognizing that it is more important to maintain the necessary auxiliary feedwater flow capability during conditions involving credible failure modes than to prevent potential overcooling by the auxiliary feedwater system in a limited range of operating conditions, it is ill-advised to degrade auxiliary feedwater system capability to prevent overcooling. Additionally, Oconee operating experience indicates that the occurrence of this type of event is very infrequent.

In light of the modifications previously performed to improve the reliability of the feedwater supply and the low significance of overcooling events, the benefits suggested by this recommendation do not warrant its implementation.

3.3 Recomendation 19

Plant performance criteria for anticipated transients should be established for all light-water reactors. Industry should have a significant role in the development of these performance criteria.

Evaluation

The existing general design criteria 13, 15, 20, 25, 26, 27, 33, and 34, together with the licensing requirements on the safety analysis of anticipated transients, technical specification limits, and recent changes in operator training and procedure provide adequate regulatory criteria to achieve and to maintain a sufficient level of safety with respect to anticipated transients. These requirements embody the necessary criteria on heat sink availability, instrumentation requirements, operator actions, protection features, and transient consequences, and as such it is not necessary to establish additional regulatory criteria on the frequency of occurrence and system response characteristics. As long as these requirements are satisfied, anticipated transients do not pose any undue risk to the health and safety of the public. The implementation of proposed additional criteria would impose unnecessary and undue restrictions on the flexibility of design and plant operation.

However, the establishment of plant performance standards for anticipated transients is appropriate for evaluating operating experience now being performed by the licensees. Such standards should establish ranges of expected or desirable performance characteristics rather than prescribe minimum acceptable requirements. This latter function is most appropriately addressed through the plant Technical Specifications and other licensing requirements. Performance standards should be used to identify unexpected or undesirable occurrences which in themselves do not pose a safety hazard but which may have the potential for more serious consequences. The standards now being used for evaluating the Oconee operating experience are discussed in Section 2.7.

3.4 Recommendation 22

The Staff should perform an analysis of the number of Licensee Event Reports attributed to licensed personnel error to determine the significance and cause of the higher number associated with the operation of B&W facilities.

Evaluation

This recommendation is not supported by the data presented in the report. As stated in Section 7 of NUREG-0667, the differences in operator error rates presented in the report are not statistically significant. The data analysis itself is inaccurate in that it does not account for the effect on the frequency of licensed operator error of length of time of reactor operation. INPO has performed a reanalysis of the same data base while properly accounting for this effect. The results show that B&W reactors do not generate the greatest number of LER's involving licensed operator errors.*

* Reference: P. E. Dietz (INPO) letter to P. Y. Baynard (Florida Power Corporation), May 1, 1980.

4.0 CONCLUSIONS

The following statements summarize the conclusions of this evaluation of the ONS Operating Experience.

1. The rate of occurrence of non-routine events has decreased significantly following the initial break-in period. The frequency of non-routine events averages 3.2 to 3.4 events per reactor month in recent years.

2. The frequency of reactor trips experienced at Oconee Nuclear Station has decreased after an initial break-in period of operation. The average Oconee frequency for recent years (1976-1979) is .44, which is considerably less than the reported industry average of one trip per reactor month.

3. The trend in the Oconee LER frequency is characterized by a relatively higher yearly avearge (29.9) during the initial three years of operation and a lower average frequency for the last four years (21.1). The Oconee average for 1978 (21.0) is less than the industry average of 40.9, reported in NUREG-0667.

4. The rate of occurrence of LER's (or RO's) involving personnel error has decreased significantly in the last three years of operation. The number of Oconee LER's involving licensed personnel error during 1978 and 1979 (1.33/RY) is less than the industry average of 2.8, reported in NUREG-0667 for the comparable period.

5. Main feedwater overfeed events following reactor trips have occurred several times at Oconee Nuclear Station. However, this phenomenon, in itself, did not contribute in a measureable manner to the primary system transient behavior.

6. Analysis of typical operator actions immediately following the reactor trip indicates that these actions contribute very little in maintaining RCS pressure above HPI actuation setpoint and in preventing loss of pressurizer level indication during routine reactor trips. However, the operator actions do enable faster recovery of the pressurizer level to the nominal control band. The operator actions, although not necessary during routine reactor trips, could contribute to better management of the RCS conditions during potential transients involving additional system failures or malfunctions.

7. A careful examination of all the Oconee reactor trip data identified nine (9) events characterized by out-of-normal transient behavior (HPI actuation, excessive cooldown, etc.). The majority of these events were due to well defined malfunctions for which corrective actions (modification of AFWS and changes in PORV) have been implemented.

8. A majority of the nine (9) "abnormal" events occurred during the first three years of operation at Oconee during a period of system adjustment and fine tuning.

9. At Oconee, valid HPI actuation is a rare occurrence (three (3) actuations in eighteen (18) reactor-years).

10. The modified AFWS is providing a sufficiently reliable performance.

11. A careful examination of Recommendations 9, 10, 19 and 22 of NUREG-0667 in light of the Oconee operating experience suggests that:

    (a) The Oconee units currently meet the intent of Recommendation 9 and that no modification is necessary.

    (b) Based on the Oconee operating experience and considering the recent changes in the AFWS, the implementation of Recommendation 10 is not warranted for Oconee.

    (c) There currently exists a sufficient number of regulatory criteria by way of general design criteria and other licensing requirements to assure safety of plant operation involving anticipated transients. Therefore, it is not necessary for the NRC to promulgate additional regulatory criteria stipulating plant performance for anticipated transients; rather, it would be appropriate for the licensees to develop and utilize operating performance standards as part of the operating experience evaluation.

    (d) The Oconee data does not support the Staff perception of higher number of LER's caused by licensed personnel error in B&W plants.

TABLE 1

OCONEE NUCLEAR STATION

Incident Investigation Report Frequency

	1973	1974	1975	1976	1977	1978	1979
Number of Incident Investigation Reports	95	173	157	144	116	123	124
Reactor Months	10	28	36	36	36	36	36
Incident Investigation Reports per Reactor Month	9.5	6.2	4.4	4.0	3.2	3.4	3.4

TABLE 2

OCONEE NUCLEAR STATION

Reactor Trip Frequency

	1973	1974	1975	1976	1977	1978	1979	Total
Number of Reactor Trips at ONS*	38	27	32	18	11	22	13	161
Reactor Months**	10	28	36	36	36	36	36	218
Reactor Trip Frequency (Trips per Reactor Month)	3.8	.96	.89	.50	.31	.61	.36	.74

Nominal Design Frequency: 400 trips for 40 year life or .83 trips per reactor month.

Industry Average Trip Frequency: 2.4/reactor month during first year
1.0/reactor month after first year

(Reference EPRI-NP-265)

*These figures include manual reactor trips.

**Unit 1 critical April 19, 1973
Unit 2 critical November 11, 1973
Unit 3 critical September 5, 1974

TABLE 3

OCONEE NUCLEAR STATION

Reportable Occurrence Frequency

	1973	1974	1975	1976	1977	1978	1979	Total
Number of RO's at ONS	21	72	90	56	68	63	66	436
Number of RO's Involving Personnel Error*	5	24	25	11	7	7	8	87
Reactor Years**	.83	2.3	3.0	3.0	3.0	3.0	3.0	18.2
RO Frequency (RO's per Reactor Year)	25.3	31.3	30.0	18.7	22.7	21.0	22.0	24.0

Industry Average (PWR) - 40.9
RO's per Facility, 1978

*Figures include both licensed and non-licensed personnel errors.

**Unit 1 critical April 19, 1973
Unit 2 critical November 11, 1973
Unit 3 critical September 5, 1974

TABLE 4

OCONEE NUCLEAR STATION

Post-Trip Performance Standards

- RCS PRESSURE SHOULD REMAIN ABOVE THE SETPOINT FOR AUTOMATIC HPI ACTUATION
- RCS PRESSURE SHOULD REMAIN BELOW THE SETPOINT FOR RCS CODE SAFETY VALVE ACTUATION
- RCS TEMPERATURE DECREASE SHOULD NOT EXCEED TECH SPEC LIMITATIONS ($100^{o}F$ DECREASE IN ONE HOUR)
- REACTOR COOLANT SHOULD BE CONTAINED WITHIN THE PRIMARY RC SYSTEM AND QUENCH TANK
- INDICATED PRESSURIZER LEVEL SHOULD REMAIN ON SCALE
- INDICATED STEAM GENERATOR LEVEL SHOULD REMAIN ON SCALE

TABLE 5

OCONEE NUCLEAR STATION

HPI Actuation History

Incident Report #	Date	Unit	Comments
B-175	07/11/74	2	PORV opened due to KI inverter failure; HPI initiated on low RCS pressure.
B-350	06/13/75	3	PORV stuck open; HPI initiated on low RCS pressure.
B-799	12/14/78	1	Dry SG overfeed; HPI initiated on low RCS pressure.

FIGURE 1

OCONEE 1 6/11/79 TRIP

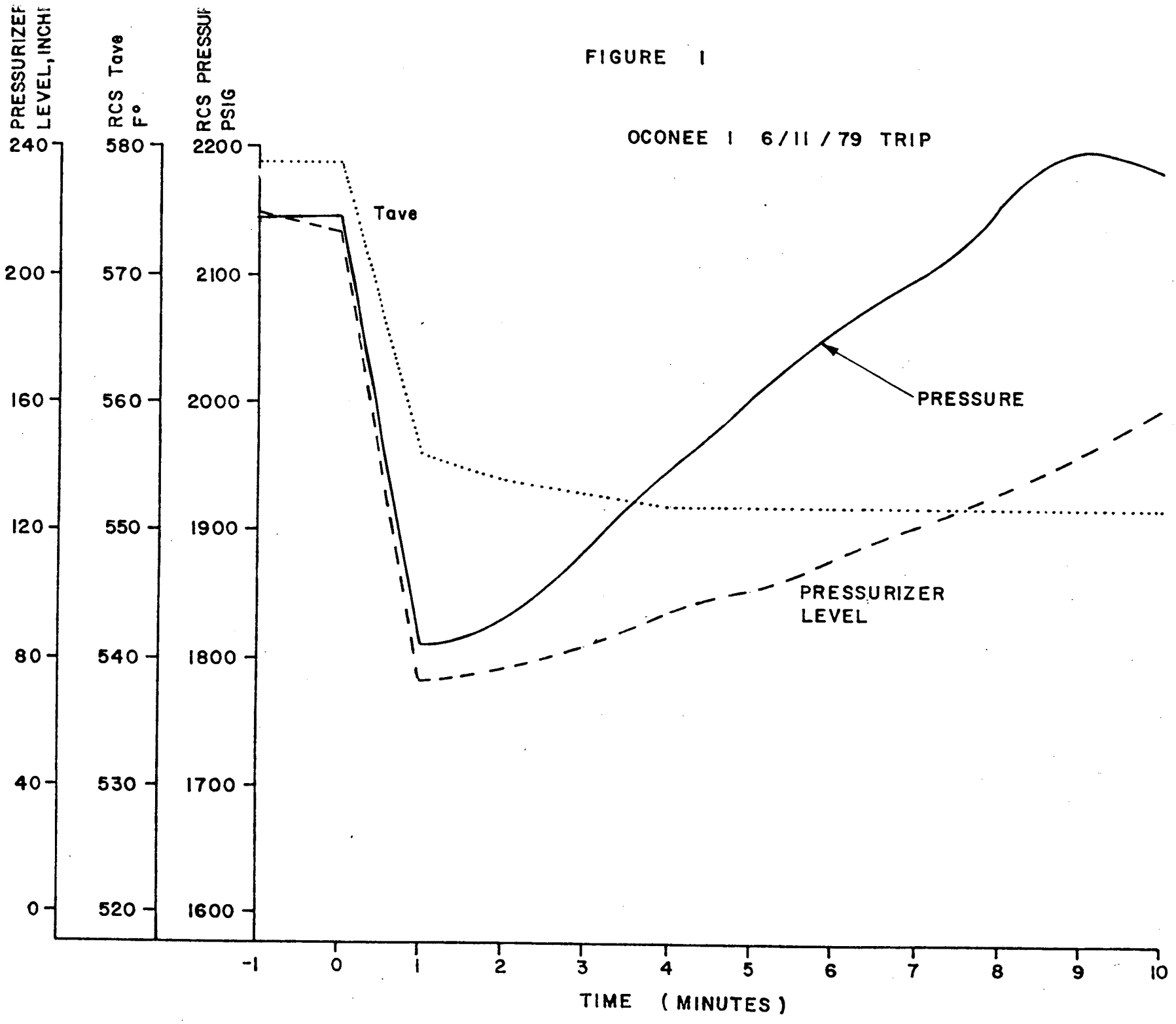

FIGURE 2

OCONEE 1 6/11/79 TRIP

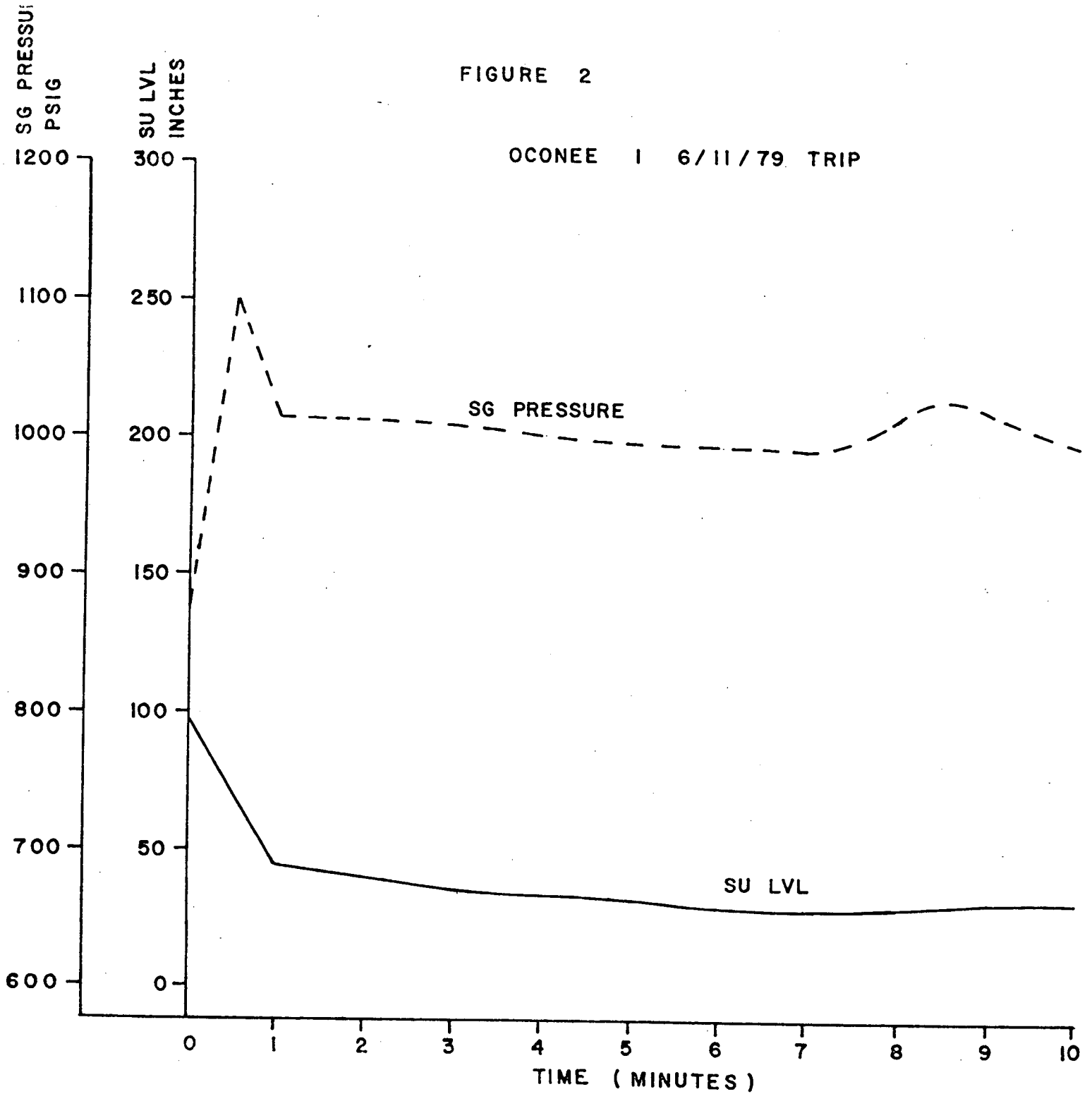

FIGURE 3

OCONEE 1 10/8/79 TRIP

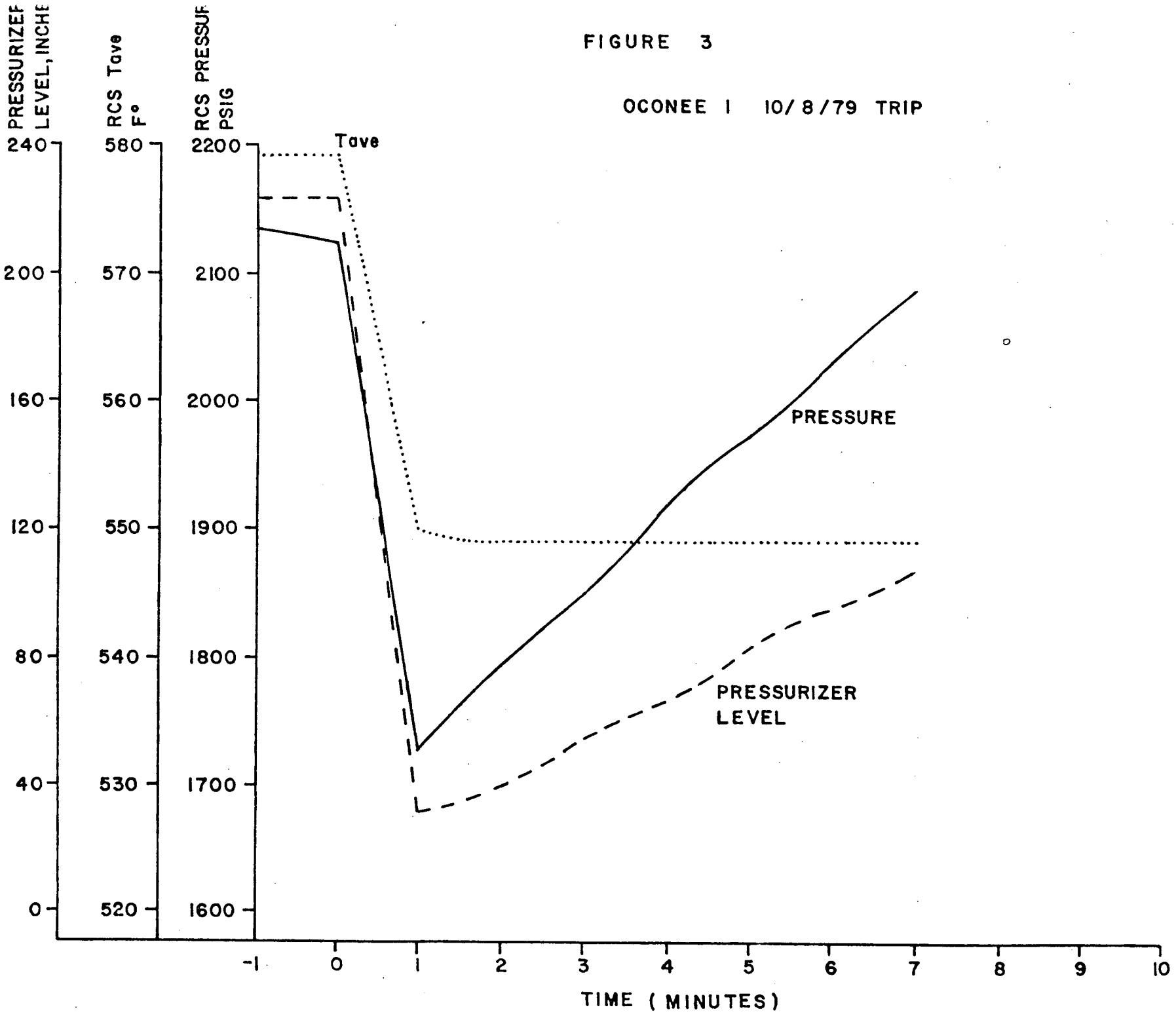

FIGURE 4

OCONEE 1 10/8/79 TRIP

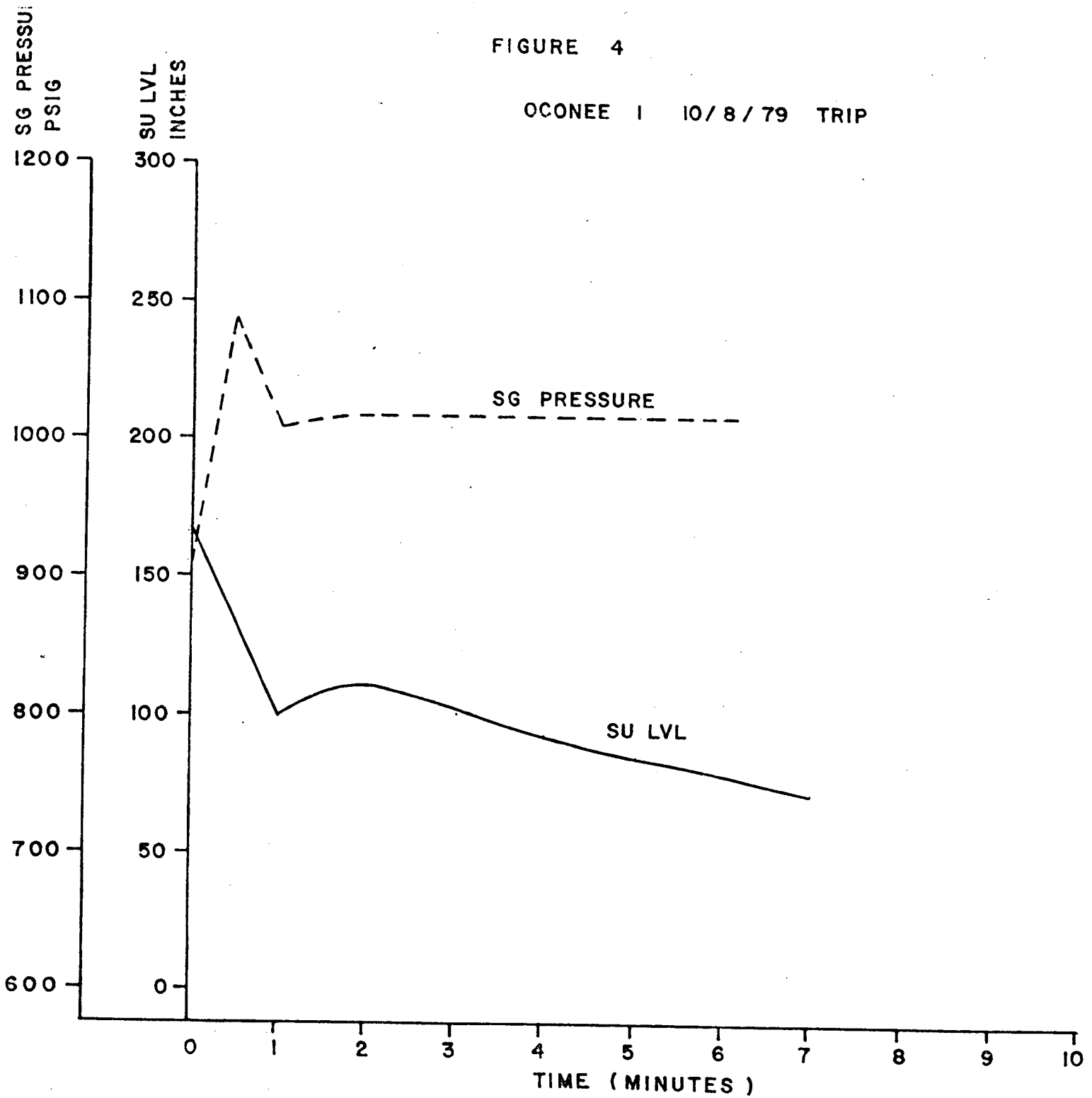

FIGURE 5

OCONEE 3 3/14/80 TRIP

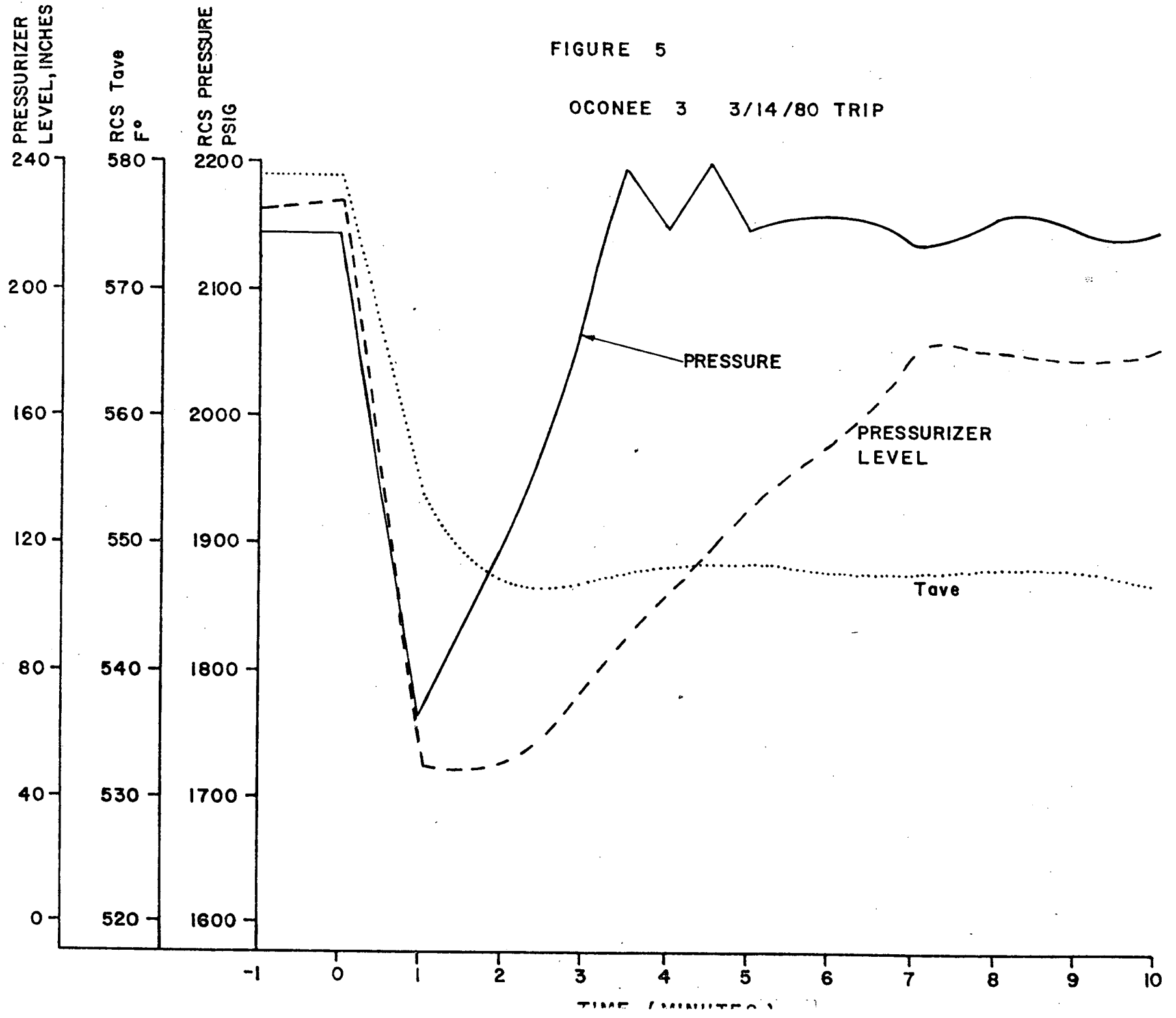

FIGURE 6

OCONEE 3 3/14/80 TRIP

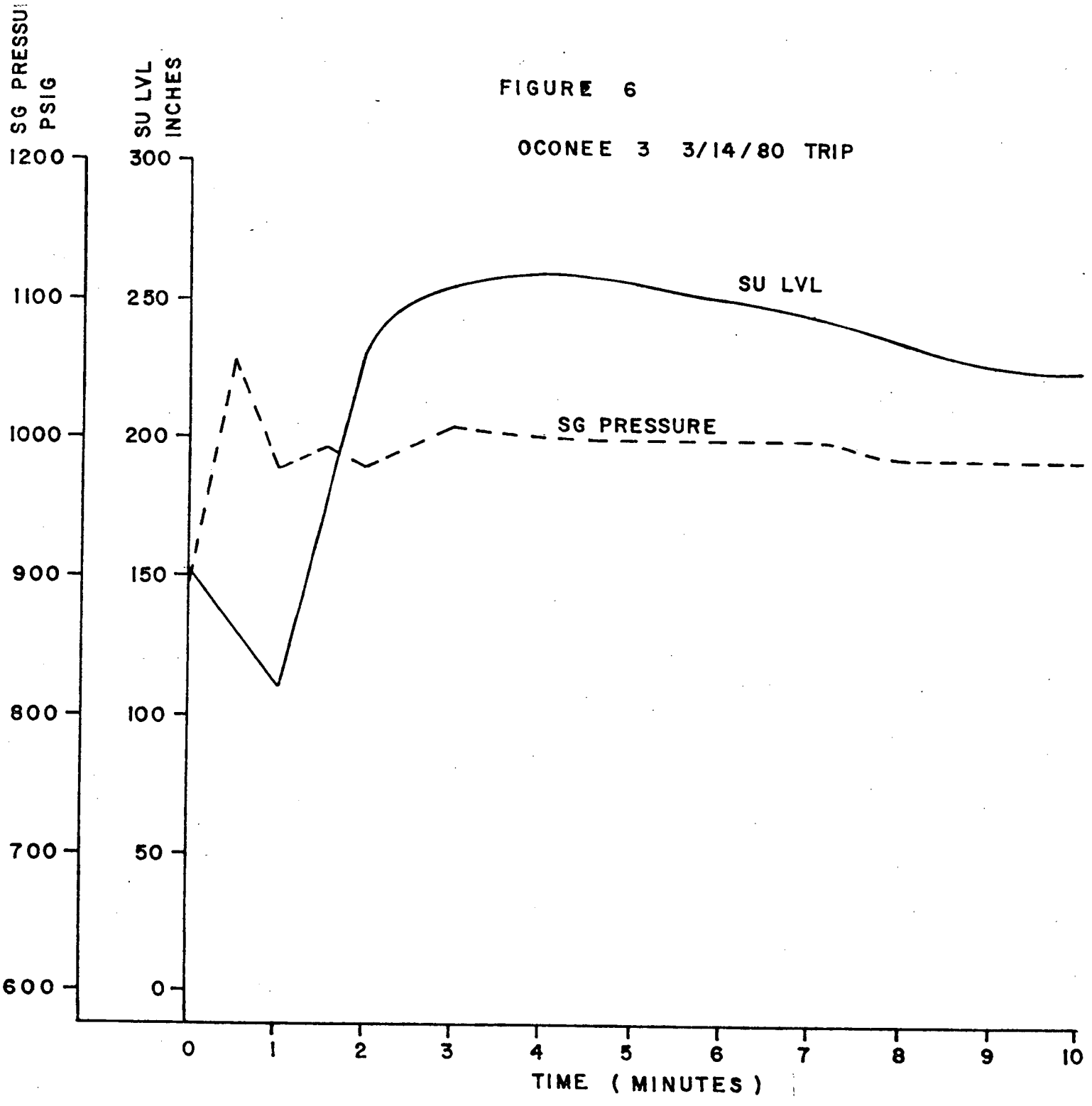

FIGURE 7
OCONEE NUCLEAR STATION
HPI SYSTEM

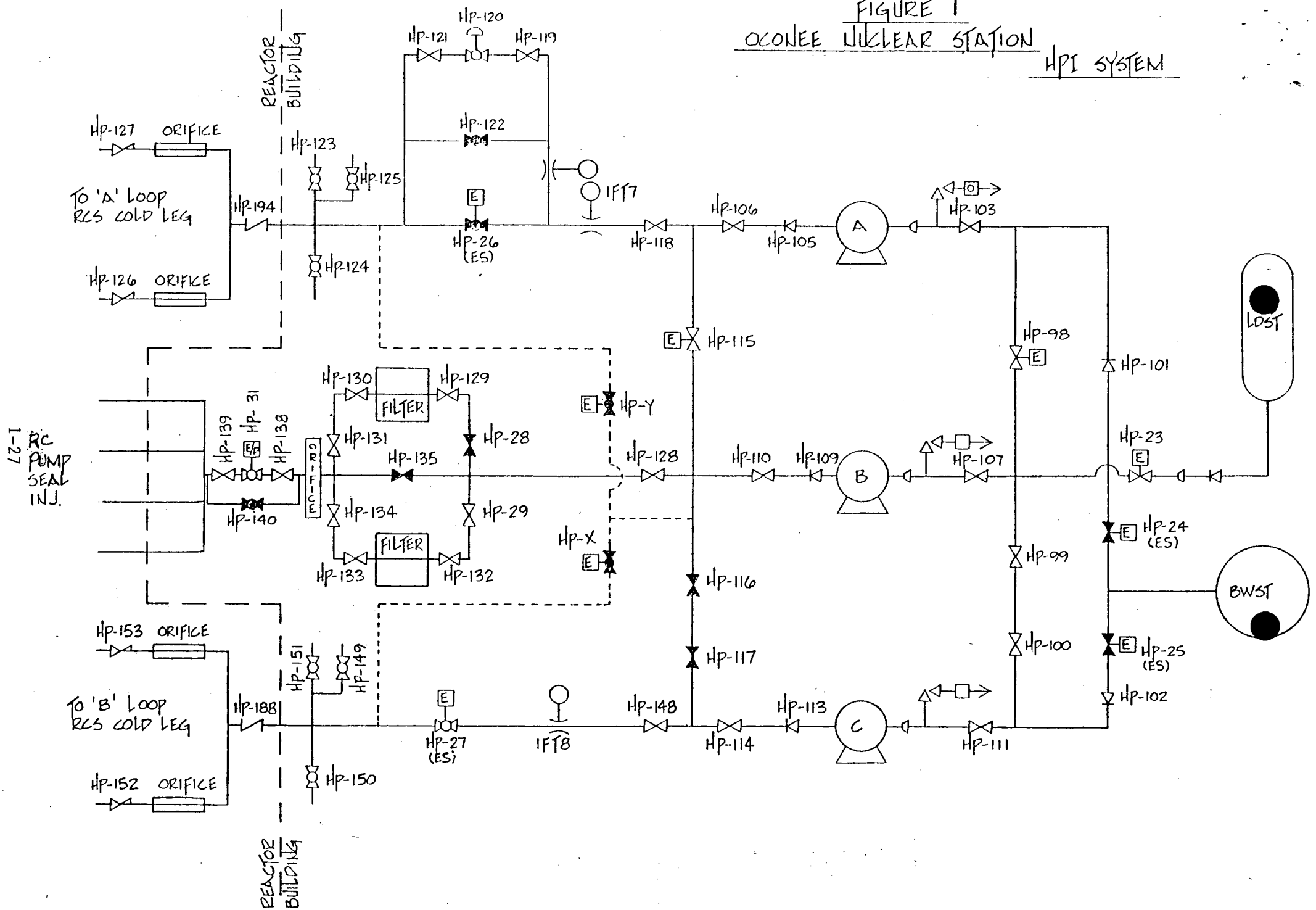

FIGURE 8 RETRAN ANALYSIS
PRESSURIZER LEVEL

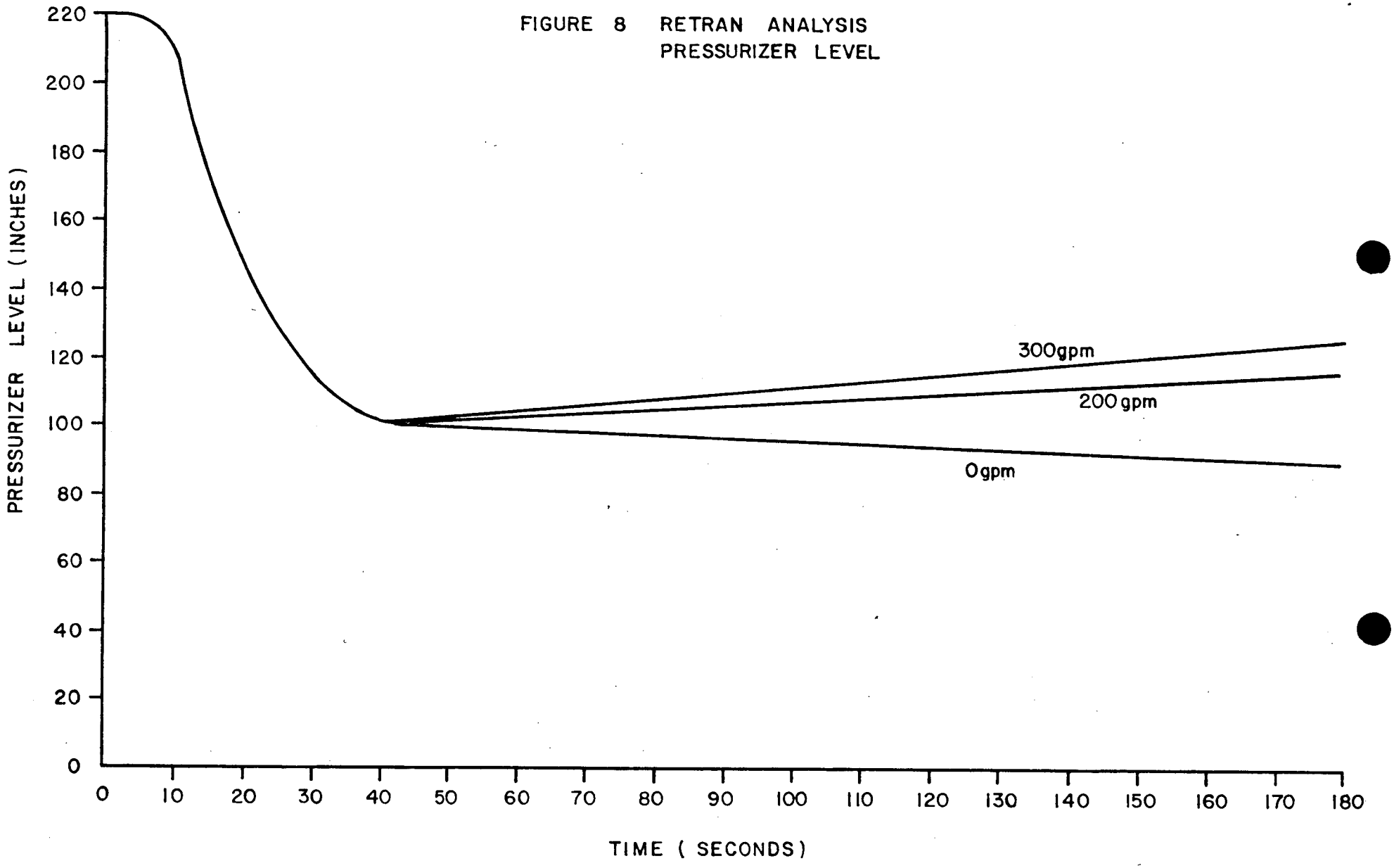

FIGURE 9 RETRAN ANALYSIS
RCS PRESSURE

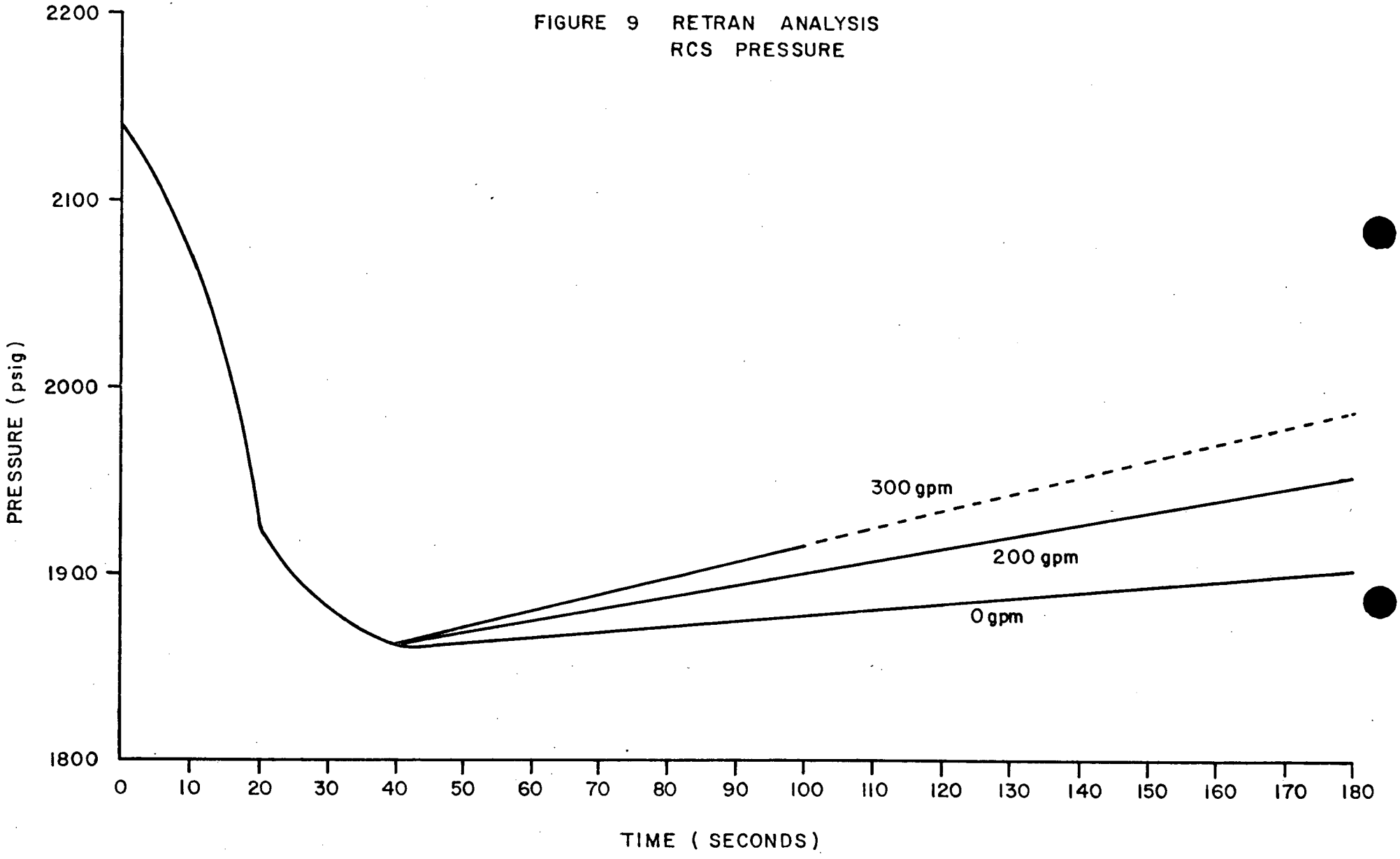

FIGURE 10 RETRAN ANALYSIS
RCS Tave

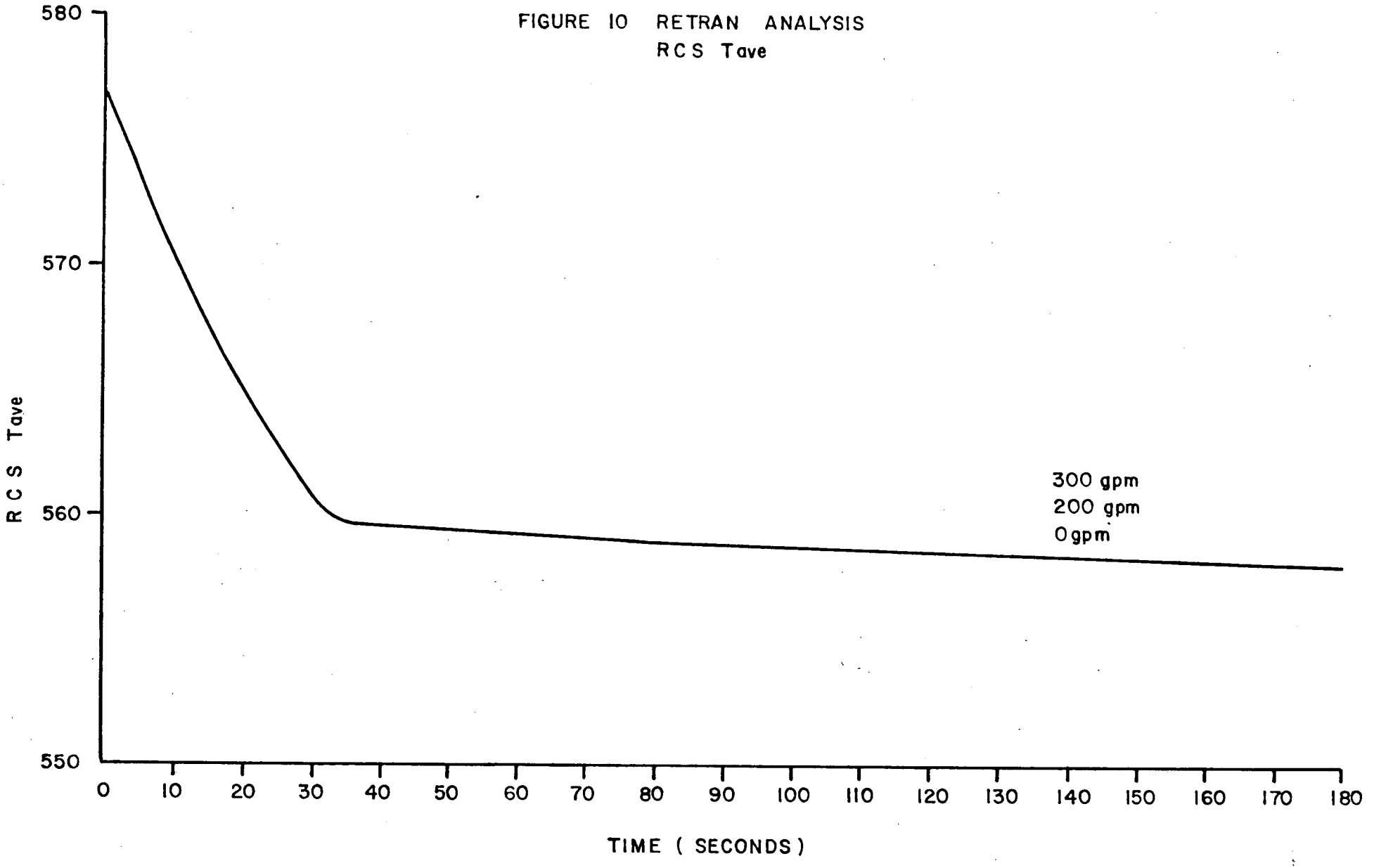

ATTACHMENT 2

OCONEE NUCLEAR STATION

EMERGENCY FEEDWATER SYSTEM

ATTACHMENT 2 - EMERGENCY FEEDWATER SYSTEM

TABLE

FIGURES

OCONEE NUCLEAR STATION

EMERGENCY FEEDWATER SYSTEM

1.0 INTRODUCTION

The Oconee Nuclear Station consists of three pressurized water reactors (PWR's), designated as Unit 1, Unit 2, and Unit 3. The Nuclear Steam Supply System (NSSS) utilized in each of these three units is of the Babcock & Wilcox (B&W) design. The balance of plant was engineered by Duke Power Company. This report deals with the emergency feedwater system at Oconee and contains descriptive details of this system that have been provided previously to the NRC Staff as a result of follow-up actions to the Three Mile Island occurrence in March 1979.

Section 2 provides a system description of the emergency feedwater system at Oconee. Included in this section are descriptions of pumps, valves and piping, power supplies, instrumentation and control circuitry and support systems.

The NRC Staff has recently completed an investigation into the transient response of B&W plants. The finding of this investigation and the accompaning recommendation are embodied in NUREG-0667 and several items related to the emergency feedwater system are addressed. The validity and appropriateness of the associated recommendations for Oconee Nuclear Station are addressed in Section 3.

The Commission Order of May 1979 required that a reliability study be performed on the Oconee emergency feedwater system. The results of this study were provided for Staff review in December 1979. NUREG-0667 does include a discussion of the results of this study. Section 4 provides a further discussion of this subject.

2.0 EMERGENCY FEEDWATER SYSTEM DESCRIPTION

2.1 Overall Configuration

A diagram of the Oconee Units Emergency Feedwater System (EFWS) is presented in Figure 1. The system configuration shown is the same for each of the three units. The EFWS is capable of feeding to either or both steam generators under automatic or manual initiation and control. The system consists of separate feed trains supplied by two motor-driven pumps and/or one turbine driven pump, and a combined suction source.

2.1.1 Suction

Two primary reserves of water are continuously available for EFWS use: The condenser hotwell, a 142,000 gallon tank normally containing more than 100,000 gallons; and the two compartments of the upper surge tank, UST "A" and UST "B", two 36,000 gallon tanks which normally contain 25,000 gallons each and which are cross-connected with normally-open motor-operated valves. Upon loss of main feedwater, the upper surge tanks may be automatically replenished from the condenser hotwell.

The hotwell pumps are normally running. As shown in Figure 1, detection of low suction flow to the main feedwater pumps causes hotwell pump discharge to be recirculated to the upper surge tank dome.

The turbine-driven pump takes suction from the upper surge tank via an 8-inch line containing normally open valves. This pump can also be connected to the condenser hotwell by opening the normally-closed motor-operated valve C-391. The motor-driven pumps have a common suction header which is supplied from both the condenser hotwell and the upper surge tanks.

2.1.2 Pumps

Emergency feedwater is supplied to the feed trains by either the turbine-driven emergency feedwater pump, rated at 1080 GPM, and/or both motor-driven emergency feedwater pumps, each rated at 500 GPM.

Recirculation for the motor-driven pumps is provided by special check valves (FDW-370 and 380) which operate at low flow conditions to recirculate less than 10 GPM per pump to the upper surge tank. A recirculation flow of 100 GPM (nominal) is provided for the turbine-driven pump by valve FDW-89.

Support system dependencies for all EFWS pumps are described in detail in Section 2.2.

2.1.3 Discharge Paths

Motor-driven pumps "A" and "B" normally supply feedwater to steam generators A and B, respectively. The turbine-driven pump feeds both generators through a common discharge header. Two paths are available for the flow of emergency feedwater to each steam generator from the discharge of the pumps feeding that generator.

The primary flow path to each generator contains an air-operated flow control valve, FDW-315 or FDW-316; flow to these valves is supplied via normally-open valves and check valves. A description of the operation of the flow control valves is provided in Section 2.4.1.2.

An alternate path for emergency feedwater flow to each steam generator is available using part of the normal startup feedwater flow path. This discharge path is available to the motor-driven pumps by opening normally-closed motor-operated valves FDW-374 or FDW-384. Flow through this alternate path is controlled by DC motor-operated valves FDW-38 or FDW-47.

Crosstie connections between the motor-driven pump discharge contain locked closed manual valves (FDW 313 and 314).

2.1.4 Steam Supply to the EFWS Turbine

Steam is normally supplied to the EFWS turbine from either steam generator via normally open motor-operated valves MS-82 and MS-84. An alternate source of steam is the startup and auxiliary steam header via valve AS-38. This steam supply is interconnected with other Oconee Units.

Steam availability is controlled by a series of valves. The first in this series is the air-operated steam admission valve, MS-93. On turbine initiation, a solenoid valve is de-energized, venting the air supply to MS-93 and causing it to open. The next valve, MS-94, is a mechanically operated turbine overspeed stop valve. This valve trips automatically on turbine overspeed and must be reset locally. Turbine speed is controlled by the final valve, MS-95, the turbine governor. Exhaust from the turbine is vented directly to the atmosphere.

2.1.5 Valve Operation and Indication

Information on electric- and air-operated EFWS valves, including valves in associated support systems, is contained in Table 1. Table 1A addresses AC motor-operated valves; Table 1B addresses DC motor-operated valves; and Table 1C addresses air-operated valves.

2.2 Supporting Systems

Supporting systems are required for the EFWS motors, turbine, pumps, and air-operated valves.

2.2.1 Lube Oil

Figure 2 shows the support system dependence of the EFWS turbine and pump. As indicated in the figure, the turbine depends on auxiliary systems to circulate and cool oil for bearing lubrication. Primary oil circulation is provided by a turbine shaft-driven oil pump. However, until the turbine reaches a speed sufficient to drive this pump, the oil is circulated by a DC motor-operated auxiliary oil pump. The turbine governor valve is connected to the bearing oil supply and will admit steam to the turbine when a sufficient bearing oil pressure exists.

Oil cooling is accomplished with an oil cooler through which water is circulated by an AC motor-operated pump.

There are no external lube oil dependencies for the motor-driven pumps and motors.

2.2.2 Cooling Water

Cooling water must be supplied to the cooling jackets of both the turbine-driven and motor-driven EFWS pumps.

Cooling for the turbine-driven pump jacket is shown in Figure 2. Cooling water is supplied from either the Low Pressure Service Water (LPSW) pumps or by gravity flow from the High Pressure Service Water (HPSW) elevated tank.

Cooling for the motor-driven pump jackets is shown in Figure 3. Cooling water for these pumps is also supplied by the LPSW system. This water flows through normally-open air-operated valves downstream of the pump jackets. If these valves are inadvertently closed, flow would be assured by valve open signals (to de-energized solenoid valves) which accompany motor-driven pump initiation.

The Low Pressure Service Water (LPSW) pumps also supply water to the turbine-driven pump lube oil cooler. One of these pumps is kept running at all times. (NOTE: The only significant difference between the Oconee units involves the number of LPSW pumps: Units 1 and 2 share 3 LPSW pumps; Unit 3 has two dedicated pumps. This difference does not affect the relability of the EFWS.)

2.2.3 Air

Air supply to air-operated valves within the EFWS and associated support systems is obtained from a common air supply system. Flow control valves FDW-315 and FDW-316 are provided with a backup nitrogen supply which is automatically connected through a check valve upon loss of normal air supply.

2.3 Power Sources

The distribution of AC power (not including battery-backed AC) to components within the EFWS and associated support systems is shown in Figure 4.

During normal operation, all affected components receive their power from two 4160 VAC busses which are fed from the switchyard.

For loss of offsite power, the Keowee Hyrdo Station generators will be automatically started and will provide power to the 4160 VAC busses. Either of the Keowee generators is capable of carrying the load on both busses. As shown in Figure 4, there are redundant paths between the Keowee Hydro Station and Oconee Units.

2.4 Instrumentation and Control

2.4.1 Initiation and Control

A simplified logic diagram showing the means of EFWS initiation and control is provided in Figure 6. The diagram is divided into three sections corresponding to motor-driven pump (MDEFWP) initiation, flow control valve logic and turbine-driven pump (TDEFWP) initiation respectively.

2.4.1.1 Motor-Driven Pump Initiation

Each of the motor driven feedwater pumps (MDEFWP) is supplied with its own independent starting circuit which monitors the main feedwater pumps. The two starting circuits are independent of the control for the turbine driven auxiliary feedwater pump. If both main feedpumps are tripped (pressure switches set at 75 psig decreasing monitor the turbine trip oil pressure) or if both of the main feedpumps discharge pressures are less than 750 psig, then the motor driven feedpump will automatically start. Further, a control switch is provided on the main control board with which the operator may start the pump manually. Once started, the motor will run until manually tripped by the operator via a control switch on the main control board. The control circuits for the MDEFWP's are powered by the 125 VDC vital I&C batteries. The starting circuitry for the MDEFWP's is presently safety grade and independent of the ICS/NNI System.

2.4.1.2 Flow Control Valves

The source of control for the flow control valves FDW-315 and FDW-316 is determined by a selector switch with positions for manual or automatic control. In the manual control mode, the valves are controlled from manual air pressure controllers (which normally send a 0% open signal to the valves). In the automatic control mode, control of the valves remains in manual unless a signal for EFWS initiation is received. In this event, valve control is transferred from the manual controller to automatic steam generator level control. As shown in Figure 6, during automatic level control, either of two control trains (called train "A" and "B") may provide level control for each steam generator. Steam generator level control is provided by level control instrumentation and analog circuits which are on battery-backed power and which are separate and independent from the Integrated Control System (ICS).

2.4.1.3 Turbine-Driven Pump Initiation

The turbine driven feedwater pump (TDEFWP) is supplied with its own starting circuit independent of the MDEFWP's. If both MFWP's trip (limit switches from turbine trip cylinder) or if both of the MFWP's discharge pressures are less than 750 psig, then the TDEFWP will start automatically. Further, a control switch is provided on the main control board with which the operator may start or stop the pump manually. A computer alarm is initiated anytime the control switch is not in the auto position.

As shown in Figure 6, other functional relationships include an oil pressure switch which permits starting of the lube oil cooling water motor and the steam admission valve limit switch which permits valve LPSW-137 to open allowing cooling water to flow through the pump cooling jacket.

Initiation of automatic level control for the flow control valves is accomplished by the same logic circuits which initiate starting of the MDEFP's. For a LOAC condition, when the EFWS motors are unavailable, initiation of automatic control for the flow control valves is provided by the DC powered portion of the logic associated with those motors.

The starting circuitry for the turbine driven pump is independent of the ICS/NNI System and is being upgraded to safety grade in accordance with NUREG-0578 requirements.

2.4.2 Instrumentation

Instrumentation is available throughout the EFWS and associated support systems. This instrumentation includes:

- o EFWS Flow - measured for both discharge paths for both feed trains.
- o Discharge Pressures - for all EFW pumps.
- o Cooling Water Flow - to the motor-driven pumps cooling jackets.

Additionally, each OTSG is provided with a safety grade automatic level control system which is independent of the ICS/NNI and which consists of two channels of OTSG level transmitters and two channels of automatic control circuity which feeds the flow control valves. Each automatic level control system is powered by independent channels of the 120 VAC vital I&C.

3.0 EVALUATION OF NUREG-0667 RELATIVE TO THE EMERGENCY FEEDWATER SYSTEM

In the recently completed NRC Staff evaluation of the "Transient Response of Babcock and Wilcox-Designated Reactors" (NUREG-0667), several conclusions were drawn regarding the emergency feedwater systems of B&W-designed reactors. These conclusions were not supported by detailed analyses but instead were largely based on the review of limited data and on perceived operating characteristics. This section of the report will address two (2) specific recommendations in the NUREG-0667 in light of the ONS emergency feedwater system. In this fashion the validity and/or appropriateness of the recommendations can be determined as they apply to ONS, in particular, and to the extent that ONS is representative of one class of B&W-designed reactors, as they apply to B&W 177 fuel assembly reactors, in general.

3.1 Recommendation 1

The Task Force strongly recommends that the auxiliary feedwater (AFW) systems on operating B&W plants be classified as an engineered safety feature system, and as such be upgraded as necessary to meet safety-grade requirements. As an alternative, assuming comparable reliability, consideration would be given to the addition of a dedicated AFW system (i.e., a separate train).

NOTE: With regard to the seismic requirements for safety-grade systems, the Task Force believes that this question warrants further study and, therefore, recommends that the issue be expeditiously resolved by the Probabilistic Analysis Staff.

Evaluation

The Auxiliary Feedwater Systems of all three Oconee units have been upgraded as a result of Three Mile Island. Two qualified electric motor driven auxiliary feedwater pumps were added in parallel to the existing steam driven auxiliary feedwater pump for each unit. The electric motor driven pumps are powered from separate trains of safety-related shed power.

Each motor driven feed pump is started by its independent automatic controls when both main feed pumps trip or both feed pump discharge pressures are low. Another independent set of controls initiate the starting of the turbine driven auxiliary feedwater pump. The starting circuitry for the motor driven pumps is presently safety grade. The starting circuitry for the turbine driven pump is being upgraded to safety grade. These circuits are independent of the ICS/NNI System.

Each OTSG is provided with a safety grade automatic level control system (independent of the ICS/NNI) which consists of two channels of OTSG level transmitters and two channels of automatic control circuitry which feeds the auxiliary FW control valve. Each of the OTSG's automatic level control systems are powered by independent channels of the 120 VAC vital I&C power system.

The Oconee emergency feedwater system coupled with the dedicated Standby Shutdown Facility, currently under construction, meet this recommendation and no additional modifications to the system are necessary.

3.2 Recommendation 2

The AFW system should be automatically initiated and controlled by engineered safety features (safety-grade) that are independent of the ICS, NNI, and other non-safety systems. The selection of signals used to initiate AFW system flow should be re-evaluated to permit automatic initiation of AFW in a more timely manner to preclude steam generator dryout (i.e., AFW system automatic start on anticipatory loss of feedwater). In addition, the level of secondary coolant in the steam generators should be automatically controlled by the AFW system in a manner to prevent over-cooling of the reactor coolant system during recovery from feedwater transients and that an appropriate signal be provided to terminate feedwater flow to the steam generator before overfilling takes place.

Evaluation

The Auxiliary Feedwater System at Oconee has been upgraded to include two auxiliary feed pump trains of safety grade equipment, safety grade initiation and safety grade automatic level control. This system is independent of the ICS/NNI system. It is not part of the Engineered Safety Features System. These two trains plus the steam driven auxiliary feed pumps start automatically upon loss of both main feedwater pumps.

The preferred method of supplying the OTSG's upon unit trip is through the main feedwater system which minimized the overcooling of the OTSG's since main feedwater is initially greater than 400°F at the time of unit trip.

Upon loss of the main feed pumps, both motor driven feed pumps and the steam driven feed pumps automatically start and provide automatic flow control via the level control system. The operator may over-ride any of the above systems and take manual control of the main or auxiliary feedwater systems at any time to prevent OTSG dryout or overfill.

Numerous station revisions have been incorporated as a result of Three Mile Island in order to guarantee the delivery of all auxiliary feedwater from a highly reliable system. It is inconsistent at this point to possibly inject a failure mode which would inhibit providing auxiliary feedwater to a steam generator. Sufficient time is available after the initiation of auxiliary feedwater for an operator to observe satisfactory operation of auxiliary feedwater and manually control auxiliary feed if the automatic controls fail. The design of Oconee level indicating system and operator action are sufficient to prevent steam generator overfill due to AFW.

The detailed review of Oconee operating experience that has been conducted by Duke has shown that overcooling transients are very infrequent and, in fact, do not pose a significant safety hazard in and of themselves. In light of the modification previously performed to improve the reliability of the feedwater supply and the low significance of overcooling events, no additional modifications to the Oconee design are deemed necessary.

4.0 EMERGENCY FEEDWATER SYSTEM RELIABILITY ANALYSIS

The Commission Orders of May 1979 and NRC letter of August 21, 1979 required emergency feedwater system reliability analyses be performed for all B&W NSSS plants. The results of the analysis for Oconee were submitted for Staff review by letter dated December 21, 1979. As a result of this study, the following modification design efforts were undertaken to eliminate the AC dependencies of the emergency feedwater system to increase reliability during loss of offsite power and to provide operability during loss of all AC:

1. A second independent cooling water supply to the EFWS turbine lube oil cooler will be provided from the elevated water storage tank via the High Pressure Service Water (HPSW) system.

2. The present cooling water supply, Low Pressure Service Water (LPSW), to the EFWS turbine-driven pump will be modified to provide an air-operated valve that will fail open upon LOOP. This will supply cooling water to the turbine-driven pump from LPSW during a LOOP. The backup cooling water supply, HPSW, will also be modified to supply cooling water from the elevated water storage tank, through the HPSW system and via a fail-open air-operated valve during a LOAC.

3. A backup to the control air system for the steam pressure regulating valves for the steam-driven pump will be provided. This will provide control of valves MS-87 and MS-129 in the event of failure due to loss of plant air.

Based on the results of this study, our continuing review of operating experience, and the current design of the Oconee emergency feedwater system, it is considered that no additional modifications, as recommended in NUREG-0667, are necessary.

TABLE I - VALVE INFORMATION

(PART A - AC MOTOR OPERATED VALVES)

VALVE NUMBER	NORMAL POSITION	VALVE OPERATOR POWER SOURCE (VOLT/MC)	VALVE OPERATOR SHED ON LOSS OF OFFSITE POWER
C-124	C	208/3XGB	Yes
C-153	O	208/3XGA	Yes
C-152	O	208/3XGA	Yes
C-158	O	208/3XGA	Yes
C-156	O	208/3XGA	Yes
C-160	C	208/3XC	Yes
C-391	C	208/3XC	Yes
FDW-368	O	600/3XJ	No
FDW-369	O	600/3XI	No
FDW-372	O	600/3XI	No
FDW-382	O	600/3XJ	No
FDW-374	C	600/3XI	No
FDW-384	C	600/3XJ	No
MS-17	O	208/3XGB	Yes
MS-24	O	208/3XGB	Yes
MS-26	O	208/3XGB	Yes
MS-33	O	208/3XGB	Yes
MS-82	O	208/3XA	Yes
MS-84	O	208/3XA	Yes
LPSW-137	C	208/3XA	Yes

(PART B - DC MOTOR OPERATED VALVES)

FDW-38	C	250/3DP
FDW-47	C	250/3DP

NOTES:

(1) All valves are controllable and position indicated in the control room.

(2) All valves fail "As-Is" on Loss of Power.

(3) Power for position indication and control for all valves is derived from the power source for the valve operator.

(4) Legend:

C = Closed, O = Open
T = Throttled,
SV = Solenoid Valve,
PCV = Pressure Control Valve,
LS = Limit Switch

TABLE I - (CONT'D)
(PART C - AIR OPERATED VALVES)

VALVE NUMBER	NORMAL POSITION	EFWS ACTUATION POSITION	CONTROL SOURCE & POWER	SOURCE & POWER OF CONTROL ROOM POSITION INDICATION	FAIL POSITION ON LOSS OF CONTROL SIGNAL	FAIL POSITION ON LOSS OF AIR
FDW-315	C	T	SV-200/DC	Solenoid	T	O
FDW-316	C	T	SV-201/DC	Solenoid	T	O
FDW-35	O	O	PCV	LS/AC	NA	As Is
FDW-44	O	O	PCV	LS/AC	NA	As Is
MS-93	C	O	SV-74/AC	LS/DC	O	O
MS-87	T	T	PCV	----	NA	O
MS-22	C	O	SV-179/AC	LS/AC	C	C
MS-19	C	O	SV-178/AC	LS/AC	C	C
MS-31	C	O	SV-181/AC	LS/AC	C	C
MS-28	C	O	SV-180/AC	LS/AC	C	C
MS-126	O	O	PCV	----	NA	C
HPSW-191	O	O	PCV	----	NA	O
LPSW-516	O	O	SV-202/AC	----	O	O
LPSW-525	O	O	SV-203/AC	----	O	O
C-128	C	O	FCV	----	C	C
MS-129	O	O	PCV	----	NA	O

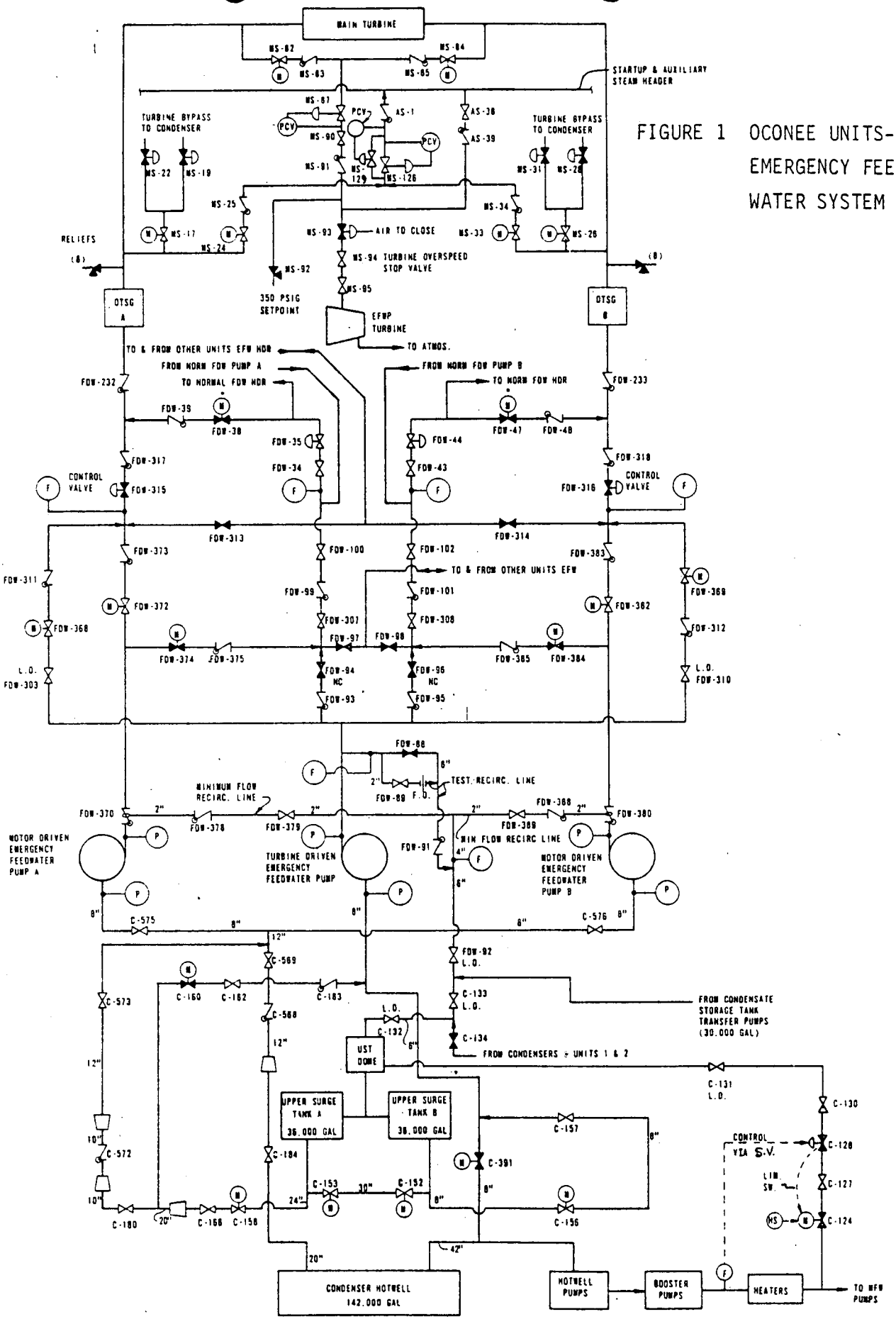

FIGURE 1 OCONEE UNITS-EMERGENCY FEED-WATER SYSTEM

Figure 2 OCONEE UNIT-EFW TURBINE AND PUMP SUPPORT SYSTEMS

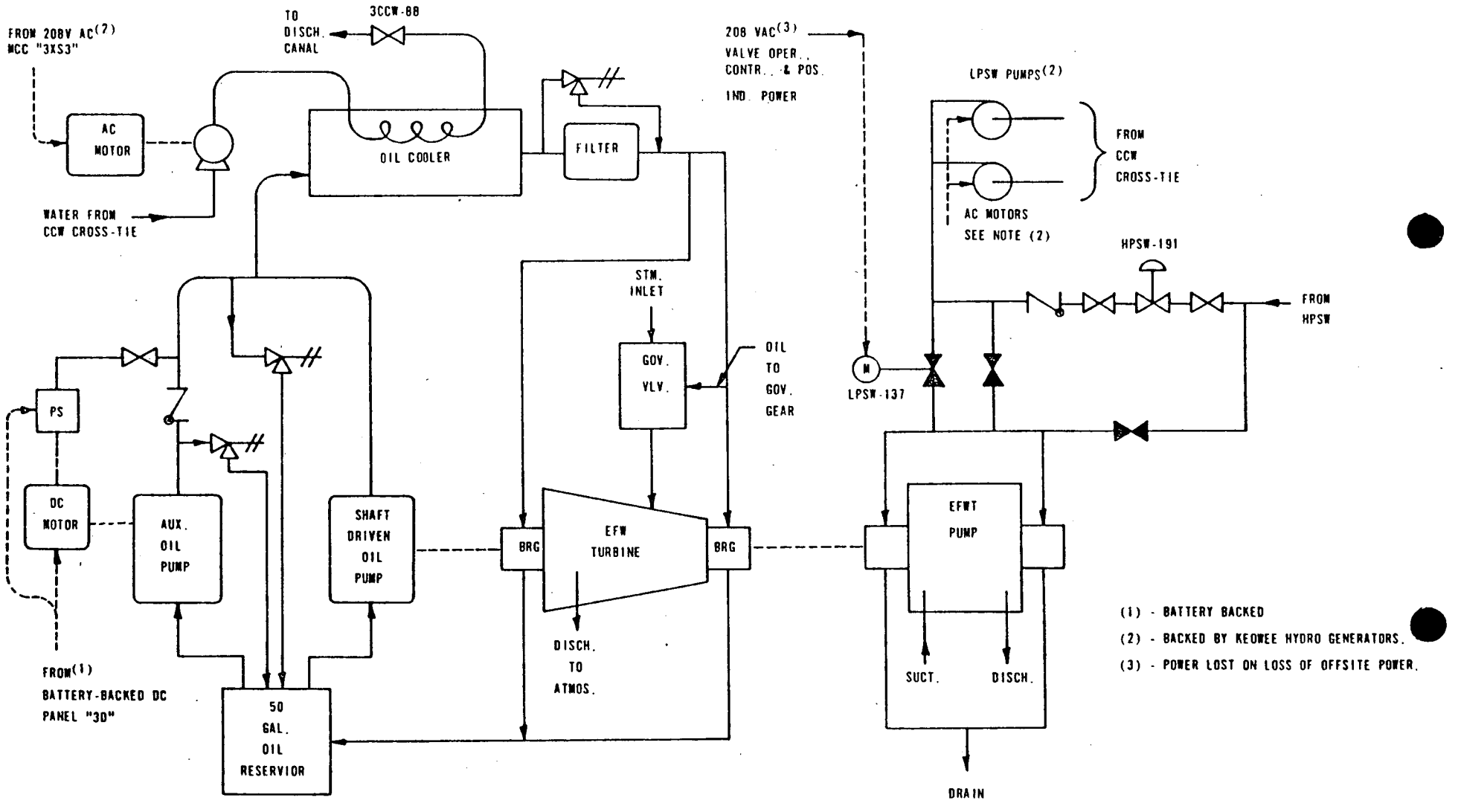

Figure 3 OCONEE UNITS-MOTOR-DRIVEN EMERGENCY FEEDWATER PUMP MOTOR COOLING WATER
(NOTE: OCONEE UNITS 1 & 2 SHARE 3 LPSW PUMPS. OCONEE UNIT 3 HAS 2 LPSW PUMPS AS SHOWN)

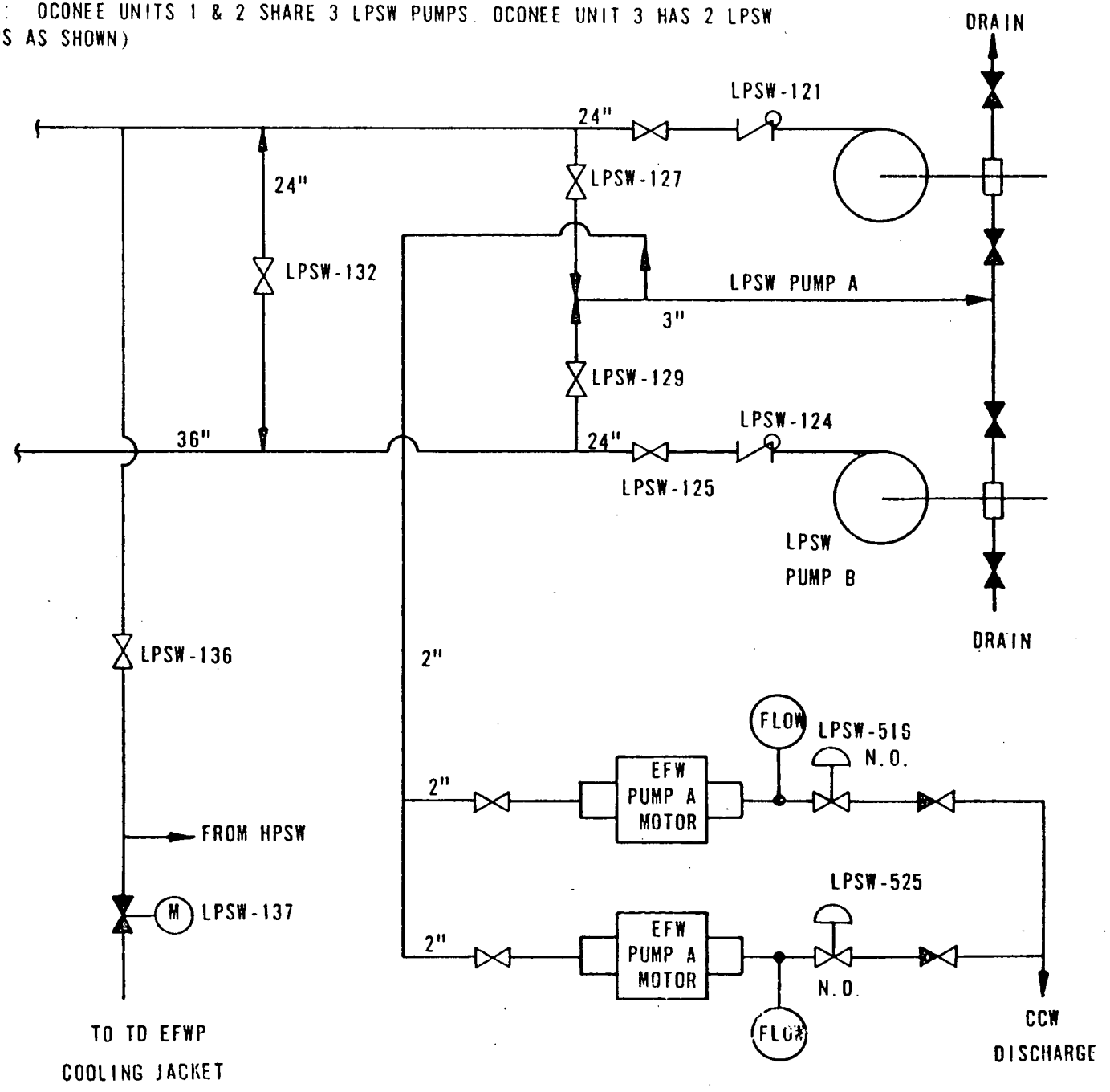

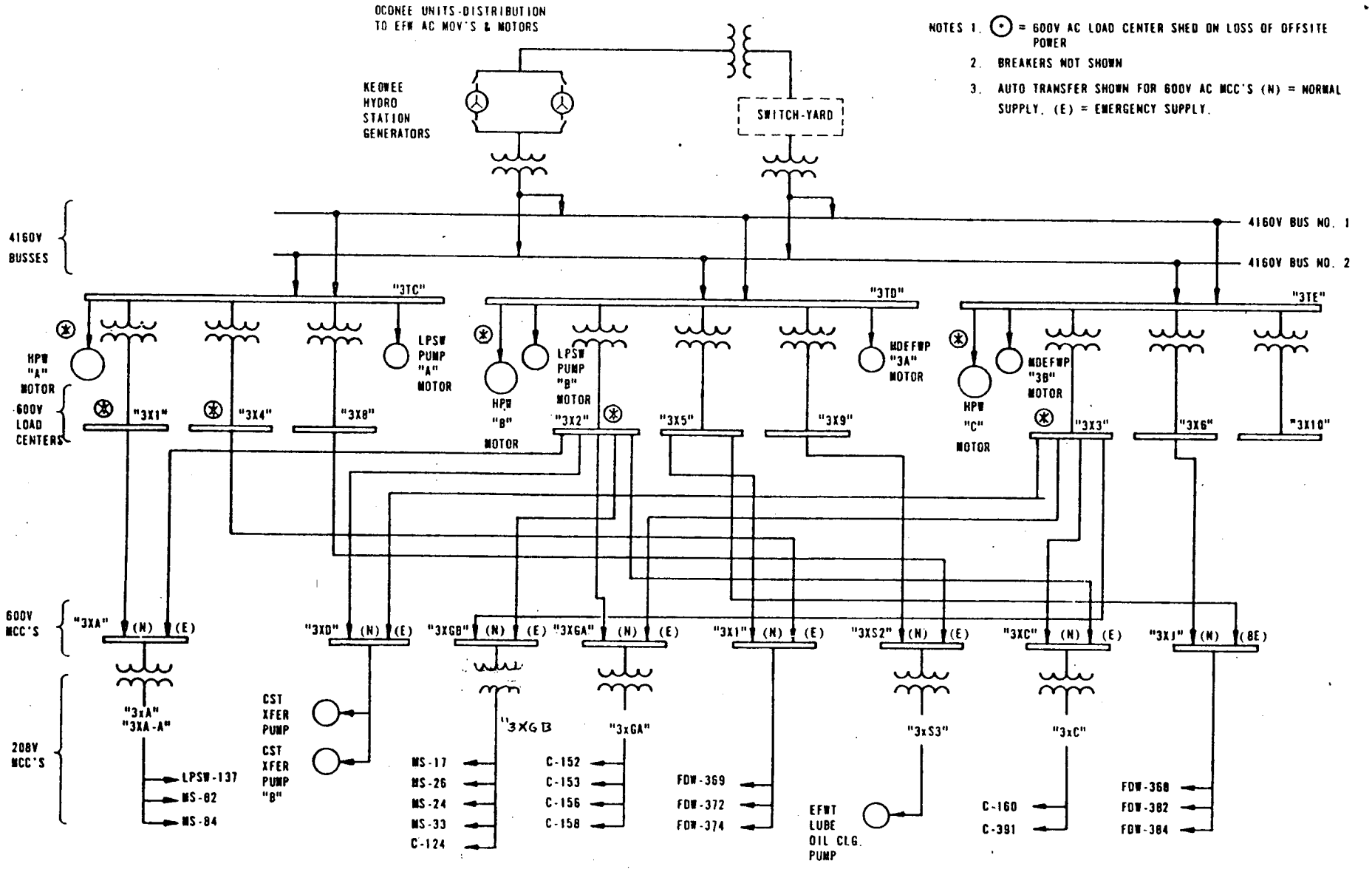

FIGURE 4 OCONEE UNITS-DISTRIBUTION TO EFW AC MOV'S & MOTORS

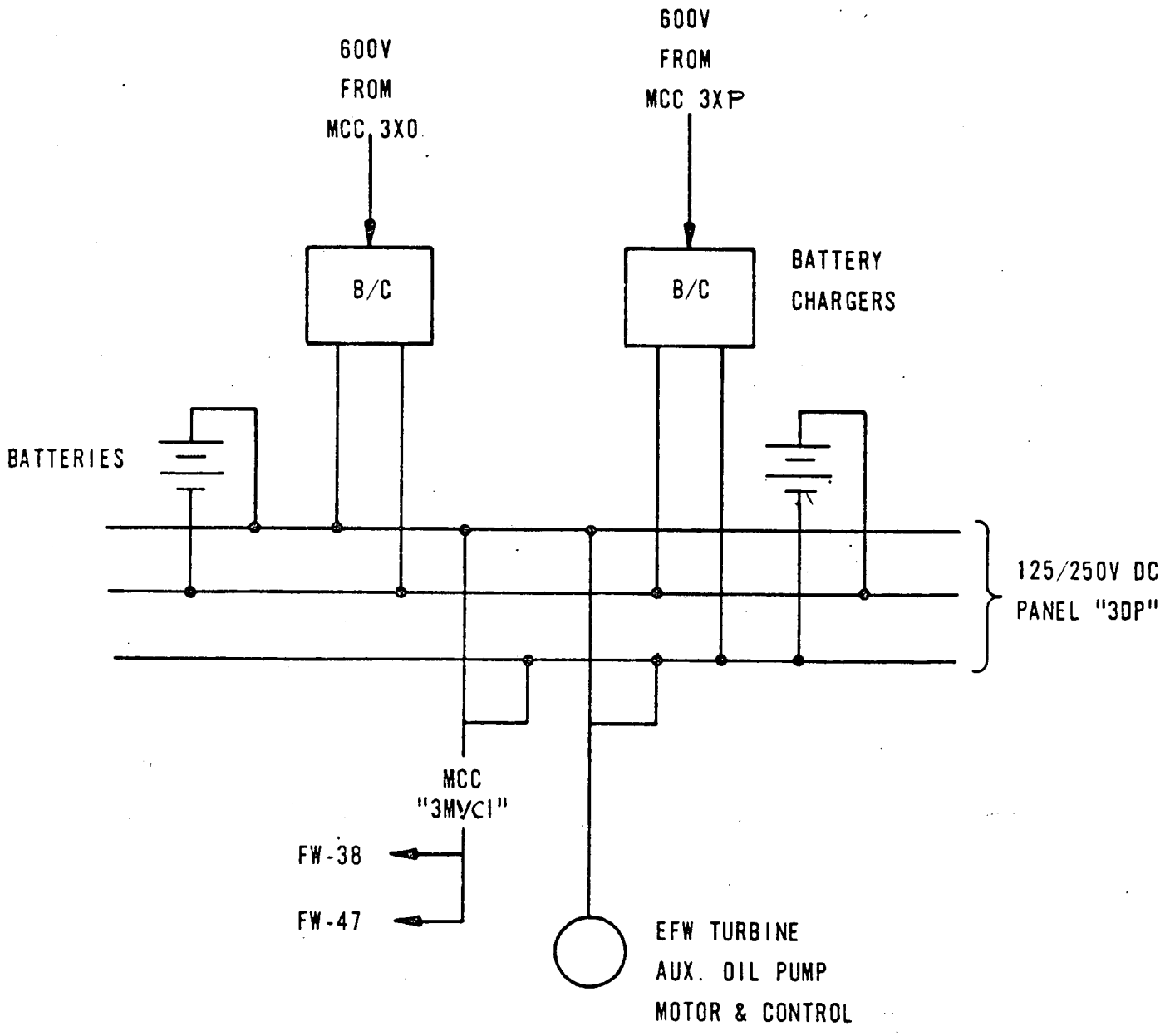

Figure 5 OCONEE UNITS DC POWER FOR EFWS COMPONENTS (EXCLUDING INSTRUMENTATION, CONTROLS & VALVE POSITION INDICATORS)

FIGURE 6 OCONEE UNITS EFWS INITIATION & CONTROL LOGIC-SIMPLIFIED

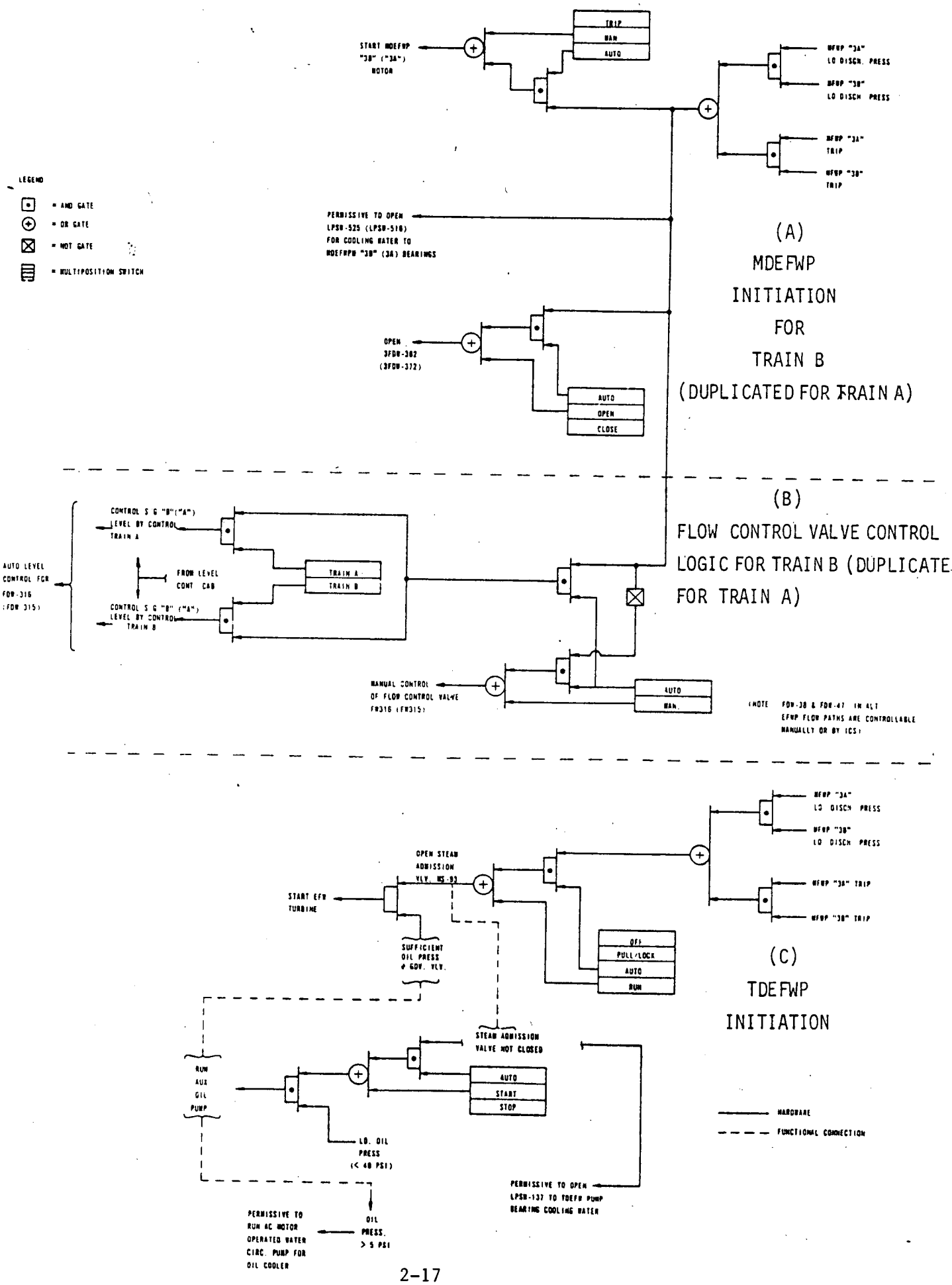

ATTACHMENT 3

OCONEE NUCLEAR STATION

INTEGRATED CONTROL SYSTEM

OCONEE NUCLEAR STATION

INTEGRATED CONTROL SYSTEM

1.0 INTRODUCTION

The Oconee Nuclear Station consists of three pressurized water reactors designated as Unit 1, Unit 2 and Unit 3. The Nuclear Steam Supply System (NSSS) utilized in each of these three units is of the Babcock & Wilcox (B&W) design. The Integrated Control System (ICS) is also B&W supplied. The balance of plant is engineered by Duke Power.

Following the occurrence at Three Mile Island in March 1979, the ICS was thoroughly evaluated and analyzed. A failure modes and effects analysis was performed for Staff review. As a result of the Crystal River transient in February 1980, the ICS came under scrutiny again and several recommendations were included in the Staff's report on the transient response of B&W plants (NUREG-0667).

Section 2 of this report provides a description of the ICS as installed at Oconee Nuclear Station. It includes information which has been provided to the Staff following the Crystal River occurrence, some of which has not been reflected in the Staff report.

The findings of the Staff's investigation of the ICS and the accompanying recommendations are embodied in NUREG-0667. The validity and appropriateness of the associated recommendations for Oconee Nuclear Station are addressed in Section 3.

The Commission Order of May 1979 required that a failure mode and effects analysis of the integrated control system be performed. The results of this generic B&W study were provided in August 1979. By letter dated November 7, 1979, the Staff stated that the review of the report has progressed sufficiently to assure that the recommendations of the report are reasonable. Additional discussions of Duke's ongoing efforts in this area are provided in Section 4.

2.0 INTEGRATED CONTROL SYSTEM DESCRIPTION

The Integrated Control System (ICS) at Oconee is a Bailey 721 NNI/ICS system whereas the Crystal River system is a Bailey 820. One of the major differences between these two systems is the fact that the 721 system does not have the 24 volt "X" and "Y" supplies; but instead, provides AC power to each individual module from a common bus. Also, in the Oconee 721 system, the NNI/ICS system is one integrated system instead of distinct separate systems as those at Crystal River. Due to these inherent differences in systems design, the Oconee systems are not subject to the same failure mode as the Crystal River ICS/NNI systems.

In considering the loss of instrument power incident at Crystal River, the most probable similar event at the Oconee station is a total loss of all AC power to the ICS/NNI system. An event such as this did occur on November 10, 1979 on Oconee Unit 3 and a report on that event has been

submitted. In analyzing the November 10 loss of power to the ICS/NNI system, Duke Power Company has taken specific action to reduce the possibility of a future similar occurrence and to mitigate the consequences of a similar failure should it occur. Specific actions taken are as follows:

A. Improved Reliability of AC Supply to the Integrated Control System

The ICS/NNI system at Oconee is powered from a dedicated static inverter system which receives a DC input from the vital instrumentation and control batteries and a backup AC input from a regulated non-load shed bus. (Refer to the attached Figure 1.) On November 10, the static switch on the output of the inverter system failed preventing either the inverter source or the backup source from feeding the integrated control system. In this particular instance, power was restored by manually switching the backup source to panel 3KI. This was accomplished by the operator such that the ICS system was without power for approximately 2-1/2 minutes. To eliminate the need for a manual transfer and to improve the integrity of this AC supply, an automatic transfer switch has been added such that on a static switch failure, the inverter static switch system will be bypassed and regulated non-load shed power supplied to panel board 3KI through the automatic power transfer switch. This automatic transfer takes place in less than 1.2 seconds and eliminates the need for manual transfer.

B. Separate Power Supply for Transmitters

As a result of our review of the November 10 incident, we have moved a pressurizer level transmitter on both Units 1 and 3 from the ICS power supply to another reliable source to assure the operator has this information available in any future incident. This modification was performed on Unit 2 during the most recent refueling outage. A similar modification was made to a steam generator level transmitter on each steam generator on Unit 3 until the new transmitters are installed on that unit as part of the emergency feedwater system upgrade. This has been completed on Unit 3. The new independent steam generator level transmitters were installed on Unit 1 as part of the emergency feedwater system upgrade during the recent refueling outage and have also been installed on Unit 2 during the most recent refueling outage. The addition of the independent steam generator level transmitters and supplying a pressurizer level transmitter on each unit with power from a source other than the panel board 3KI will assure that the operator has full and complete information available during any future loss of ICS power. In addition, a "display group" has been defined on the plant operator aid computer such that on a loss of ICS power, the operator may quickly have full and complete information on all key primary and secondary system parameters required to manage the plant during the incident by indexing two pushbuttons on the computer panel on the control boards. In addition to the above changes, as a result of the Crystal River event, the controls and indications needed to maintain hot shutdown are being provided independent of ICS/NNI power. See Section 3.0 for a listing.

FIGURE 1
OCONEE NUCLEAR STATION
TYPICAL ICS/NNI AC SUPPLY

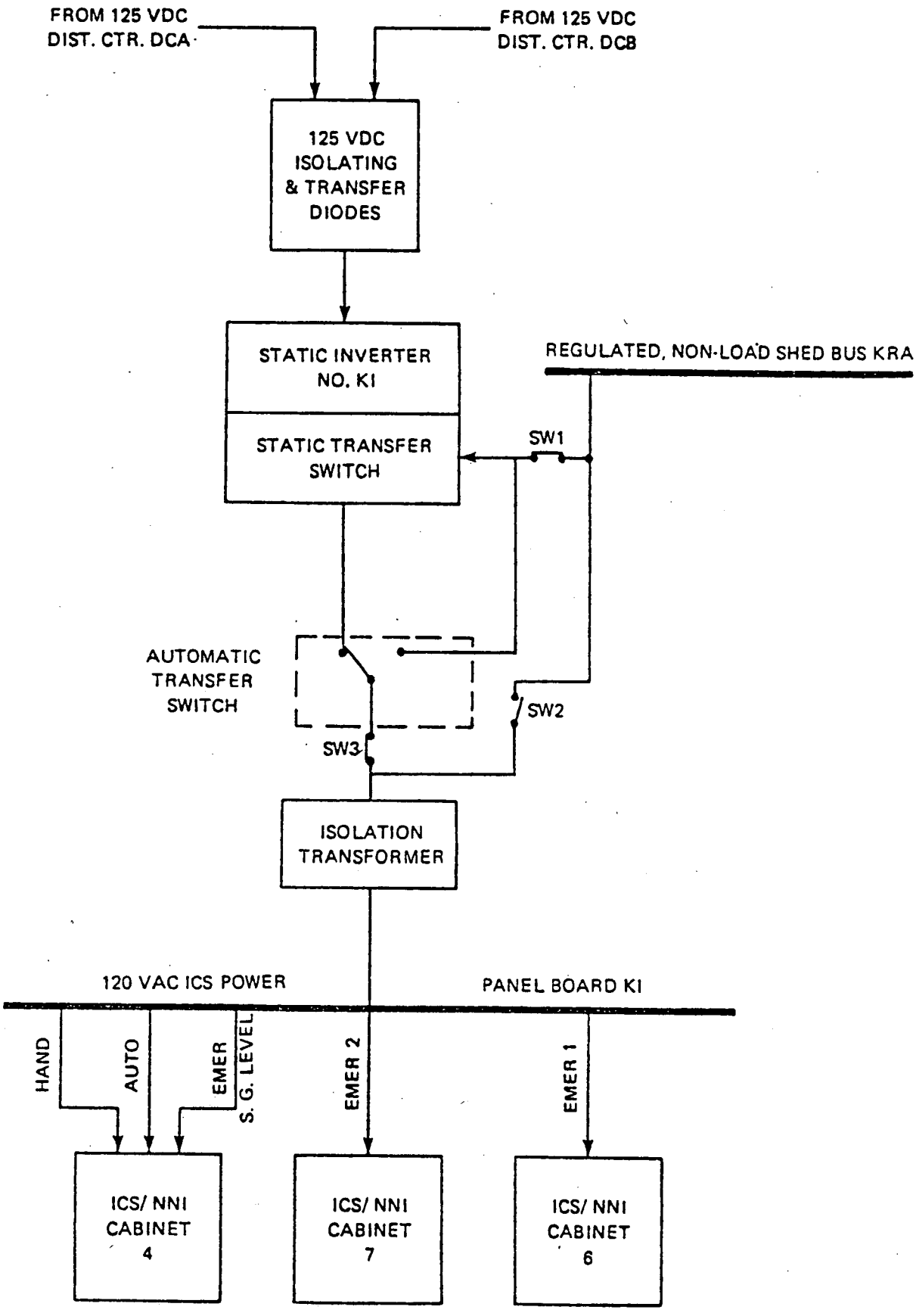

C. Emergency Procedures

As immediate corrective action following the November 10 incident, all shift operating personnel were instructed on manual transfer of ICS power and reviewed the appropriate alarm procedures covering this event. (Note that the automatic transfer switch was installed on Unit 3 prior to the unit returning from service following the November 10 outage and was subsequently installed on Unit 1 during its refueling outage. The automatic power transfer has been added to Unit 2 during the most recent refueling outage.) Further corrective action included the issuance of a new emergency procedure covering the loss of the KI bus supplying power to the integrated control system. This emergency procedure identifies the symptoms characterizing this event and immediate automatic action which will take place and manual action to be executed by the operator in such an event. Further, the emergency procedure identifies all instrumentation and control affected by the loss of power and enumerates the state in which the device will fail on such an event. The emergency procedure also includes the designation of alternate sources of information on key plant parameters if the computer system is also unavailable at this time, thus assuring the operator can obtain this information independent of the ICS power supply and computer failures.

3.0 EVALUATION OF NUREG-0667 RELATIVE TO ONS INTEGRATED CONTROL SYSTEM

In the recently completed NRC Staff evaluation of the "Transient Response of Babcock and Wilcox-Designed Reactors" (NUREG-0667), several conclusions were drawn regarding the ICS of B&W-designed reactors. This section of the report will address the specific recommendations in the NUREG-0667 in light of the ONS ICS design. In this fashion, the validity and/or appropriateness of the recommendations can be determined as they apply to ONS, in particular, and to the extent that ONS is representative of one class of B&W-designed reactors, as they apply to B&W 177 fuel assembly reactors, in general.

The NRC Staff report recommends that B&W plants should improve the reliability of the plant control system, particularly with regard to undesirable failure modes of power source, signal source and the integrated control system itself. To this end, the following specific recommendations were made:

Recommendation 5a

The power buses and signal paths for non-nuclear instrumentation and associated control systems should be separated and channelized to reduce the impact of failure of one bus.

Evaluation

To the extent that this is applicable to the Bailey 721 system, this recommendation has been implemented in the Oconee design. Section 2 of this report provides further details of the Oconee system.

As a result of the Crystal River 3 event, Duke Power Company has evaluated the indications and controls needed to maintain the plant at hot shutdown independent of ICS/NNI power supplies. The ICS/NNI has been modified where necessary to provide the following indications and controls independent of ICS/NNI power:

Indications

1. Steam Generator Levels
2. Pressurizer Level
3. Reactor Coolant System Wide Range Pressure
4. Steam Generator Pressure
5. Reactor Coolant System Wide Range Hot Leg Temperature
6. Reactor Coolant System Cold Leg Temperature
7. Incore Thermocouples
8. Emergency Feedwater Flow
9. Reactor Coolant Pump Total Seal Flow
10. Letdown Storage Tank Level
11. Borated Water Storage Tank Level

Control

1. Seal Flow Control Valve HP-31
2. Makeup Flow Control Valve HP-120
3. Turbine By-Pass Valve Control
4. Pressurizer Heaters
5. Pressurizer Spray Valve
6. Steam Generator Level Control Valves FDW-315 and FDW-316
7. PORV-Valve RC-66
8. PORV-Block Valve RC-4
9. Letdown Control Valve HP-7

Recommendation 5b

The power supply (including protective circuitry) logic arrangement should be reconsidered to eliminate "mid-scale" failures as a preferred failure mode for instrumentation. "Full-scale" or "down-scale" failures may be preferred in that they give the operator more positive indication of instrumentation malfunction.

Evaluation

Midscale failures might tend to confuse plant operators under certain failure modes. (It is not possible to postulate all failure modes and there may be some plant failure mechanisms in which the midscale failure is the preferable failure mode.) The intent of this recommendation has already been achieved in assuring that:

a. the operator recognizes all I&C power failures and,

b. the operator has a clear indication of the controls and displays affected by a power supply failure and those which are unaffected by the failure.

No further action is deemed necessary in response to this recommendation.

Recommendation 5c

Multiple instrument failures, typically caused by power loss, should be unambiguously indicated to guide operator selection of alternate instrumentation that is unaffected by the failure.

Evaluation

The existing design of Oconee systems and existing procedures allow the operator to cope with various combinations of loss of power to the NNI/ICS system. In particular, alarm indications provide information to the operator on loss of various instrument and control functions and emergency procedures provide assurance of positive and safe response by the operator. No further action is deemed necessary.

Recommendation 5d

If control system failures or response to failed input signals can cause substantial plant upsets (e.g., required action by engineered safety features or safety valves), the control system should have provisions for detecting gross failures and taking appropriate defensive action automatically, such as reverting to manual control or some safe state.

Evaluation

It is not a practical or realistic objective to attempt to postulate all failures that might occur in plant control systems and prescribe a "safe" automatic action for the controls on such failures. The integrated control system of a B&W plant is no more prone to such failure modes than the controls of other NSSS vendors or any of the balance of plant controls. The engineered safety features and reactor protective systems are provided to maintain the plant within proper boundaries should any controls malfunction and force the operation of the plant toward a protection system limit. No further action in response to this item is deemed necessary.

Recommendation 5e

The NNI power buses should be reviewed and rearranged, as necessary, to provide redundancy of indication of each reactor coolant and secondary system loop. That is, where indicators for one loop are provided, one channel should be powered from NNI "X" and the other from NNI "Y", instead of loop "A" being powered from NNI "X" and loop "B" from NNI "Y".

Evaluation

This recommendation is explicitly addressed to the Bailey 820 system with "X" and "Y" channels and not the Bailey 721. However, the intent of this recommendation has been accomplished at Oconee by supplying instrumentation and controls needed to maintain hot shutdown separate from NNI/ICS power as described in response to item 5(a).

Recommendation 5f

Prompt follow-up action should be taken on the recommendations contained in BAW-1564 Integrated Control System Reliability Analysis.

Evaluation

A discussion of the actions taken as a result of this study is included in Section 4 of this report.

Recommendation 5g

NRC has reviewed the recommendations contained in NSAC-3/INPO-1 (Analysis and Evaluation of Crystal River Unit 3 Incident). The Staff agrees that licensees should evaluate the effectiveness of these recommendations for their plants, especially with regard to the NNI/ICS aspects.

Response

Duke Power has evaluated these recommendations and has taken actions as deemed appropriate. No further action is deemed necessary in response to this item.

Recommendation 5h

Prompt followup actions should be taken on IE Bulletin 79-27.

Response

Duke Power Company has already taken action on IE Bulletin 79-27. As discussed in item 5(a), the NNI/ICS power supplies have been upgraded to prevent loss of power on static transfer switch failures. In addition, we have supplied the instrumentation and controls needed to maintain hot shutdown independent of ICS/NNI power.

Recommendation 12

A qualified Instrumentation and Control Technician (I&C) should be provided on a round-the-clock basis at all operating B&W reactors.

Response

An I&C should not be provided on an around-the-clock basis for the following reasons:

1. Revisions have been made at Oconee to make the ICS/NNI Power Systems highly reliable.

2. Emergency procedures for loss of ICS/NNI power have been written which provides the operators guidance on what instrumentation will be lost on any given power loss and appropriate backup instruments to be used.

3. It is more appropriate to call out a technician through the existing callout system established for Oconee which assures timely response. This mechanism allows us to choose technicians who are well trained on the particular system which is causing a given problem.

While it is true that the qualified I&C technician at Crystal River aided in determination of the cause of the power failure, it is not certain that his presence is necessarily needed in light of the modifications that have been made to the NNI/ICS.

Therefore, in response to this item, no further action is deemed necessary.

4.0 INTEGRATED CONTROL SYSTEM - FAILURE MODES AND EFFECTS ANALYSIS (BAW-1564)

In summarizing the results of BAW-1564, the FMEA concluded that the reactor core remains protected throughout any of the ICS failures studied. In addition, it was found that the majority of the postulated single failures could cause a reactor trip at some time in core life and at some power level. This was closely related to the new setpoints for the RPS and PORV RC pressure, in which the RPS RC pressure setpoint is now exceeded before the PORV pressure setpoint is reached.

The overall conclusions from operating experience portion of BAW-1564 was that the ICS hardware performance has not led to a significant number of reactor trips.

As a result of the ICS reliability study, B&W made several recommendations to be reviewed on a plant specific basis. For possible changes to enhance ICS reliability, Duke reviewed each of these recommendations and responded to each one in a December 21, 1979 letter to R. W. Reid. (Attached.)

Based on the efforts currently in progress in this area, it is considered that the requirements of this recommendation are being met.

DUKE POWER COMPANY
POWER BUILDING
422 SOUTH CHURCH STREET, CHARLOTTE, N. C. 28242

WILLIAM O. PARKER, JR.
VICE PRESIDENT
STEAM PRODUCTION

TELEPHONE: AREA 704
373-4083

December 21, 1979

Mr. Harold R. Denton, Director
Office of Nuclear Reactor Regulation
U.S. Nuclear Regulatory Commission
Washington, DC 20555

Attention: Mr. R. W. Reid, Chief
Operating Reactor Branch No. 4

Re: Oconee Nuclear Station
Docket Nos. 50-269, -270, -287

Dear Sir:

With regard to your letter dated November 7, 1979, which requested additional information regarding the ICS Reliability Analysis, please find attached our response to the recommendations identified by this analysis.

The schedule for implementation of the items identified has not been established. We intend to implement the identified modifications in a timely manner consistent with availability of equipment, completion of final design work, and unit availability.

Very truly yours,

William O. Parker, Jr.

RLG/sch
Attachment

bcc: Mr. H. B. Tucker
Mr. K. S. Canady
Mr. N. A. Rutherford
Mr. S. R. Lewis
Mr. K. R. Wilson
Mr. J. E. Smith
Mr. R. T. Bond
Master File OS 801.01
Section File OS 801.01
Mr. J. M. Davis (ONS)
Mr. W. A. Coley
Mr. J. E. Cole
Mr. B. M. Rice
Mr. R. E. Ham
B&W Owners Group

dupe of 8001020395
3pp

ELECTRICITY FOR A PROGRESSIVE PIEDMONT
75th Anniversary
DUKE POWER 1904-1979

DUKE POWER COMPANY
Response to NRC Letter of November 7, 1979
ICS Reliability Analysis

NNI/ICS POWER SUPPLY RELIABILITY

The power supply for the ICS is normally supplied from the station batteries through static inverters. An alternate source is provided from the AC regulated power system. A static transfer switch is provided to automatically transfer the ICS panelboard to the regulated power source within 1/4 cycle following loss of inverter power supply. The system will automatically re-transfer from regulated power supply to inverter supply two seconds after the inverter returns to a normal output condition. This scheme will be upgraded to include another transfer switch, down stream of the static switch, which will automatically transfer power back to the regulated power supply if the transfer back to the inverter supply fails. This modification will significantly increase the reliability of the NNI/ICS power supply.

The inverter or regulated AC feeds a panelboard which supplies five feeds to the ICS/NNI - auto, hand and three emergencies. Basically, the original design philosophy was to enable the system to ride through a loss of auto power and not trip the unit. However, subsequent design reviews revealed that the system probably wouldn't ride out an auto power loss and that it would not ride out a hand power loss. Therefore, the solution was to supply the ICS with a highly reliable power source since splitting the loads increased the probability of power loss.

RELIABILITY OF RC FLOW SIGNAL TO ICS

Presently each loop inputs a DP transmitter signal into the ICS. The signal is conditioned by a square root extractor, temperature compensated and then used in BTU limit, ΔTC and load limit control. The capability exists to transfer either or both inputs to buffered RPS system DP transmitter outputs. This is accomplished by manually transferring the cable from one jack to another. To increase the reliability of this signal, we are investigating the feasibility of revising the manual transfer scheme to automatically select each loop's highest flow.

ICS/BOP SYSTEM TUNING - particularly feedwater condensate systems and the ICS controls.

(1) Any particular operational (startup, etc.) problems experienced at your plant with respect to the ICS.

We have had some problems with the Main Feedwater Valves (MFWV) during startup due to excess leakage. Because of this, we have a maintenance program underway to test the valves for leakage and proper operation every refueling. Also, we intend to modify the controls for the MFWVs so that they won't close once opened above 10% power. In addition, we feel that some of our feedwater oscillating are caused by the Heater Drain system level controls. A modification is currently underway to replace the existing level controls with expanded range controllers. The above modifications should make the feedwater/condensate system more reliable and thus increase ICS reliability.

(2) Bases for operational intervention in place of automatic ICS action (including start-up, power operation and shutdown activities).

The operator will not intervene if he feels that the ICS is doing its job. However, if the operator has had a problem previously, chances are he will react in the same manner as before. We do not intend to instruct our operators not to over-ride ICS controls since to do so could lead to additional RPS challenges. We feel that this area is dependent on operator training and have committed ourselves to increased ICS training to further insure optimum use of automatic ICS controls. The plant simulator which is currently being designed will significantly improve the operators understanding of the ICS.

(3) Procedures used by the operator to perform the operation described in (2) above.

There are no specific procedures which tell the operator when to intervene with automatic ICS controls. We feel that this concern is best handled by increased operator training instead of additional procedures. However, there are procedures which deal with possible consequences of ICS failure, e.g., loss of KI Buss, Loss of SG Feedwater, Condensate and Feedwater, Main Steam Line Break, etc.

(4) Additional training provided to the operator.

See Item (2) above.

(5) <u>Balance of Plant</u>

A. Main feedwater pump turbine drive minimum speed control to prevent loss of main feedwater or indication of main feedwater.

A modification is underway to increase the oil pressure to the main feedwater pump to prevent loss during minimum speed control.

B. A means to prevent or mitigate the consequences of a stuck open main feedwater startup valve.

These valves will be tested for leakage and proper operation during every refueling outage. However, if the valve does stick open, the operator will close the block valve to mitigate the consequences.

C. A means to prevent or mitigate the consequences of a stuck open turbine bypass valve.

The operator will recognize a stuck open valve as a steam line break and react to it as that. He will see low S.G. pressure in one loop, large increase in reactor power and low Tave. Upon recognition, he will mitigate the consequences by closing the block valve.

ATTACHMENT 4

OCONEE NUCLEAR STATION

PROCEDURES AND OPERATOR TRAINING

OCONEE NUCLEAR STATION

PROCEDURES AND OPERATOR TRAINING

1.0 INTRODUCTION

NUREG-0667, "Transient Response of Babcock and Wilcox Designed Reactors" draws several conclusions in the area of emergency procedures and operator training. Based on a limited review of emergency procedures at operating plants, the NRC Staff concluded that generally, B&W plants require more manual immediate actions on the part of the operator than other vendor types.

This specific area of concern appears to be based solely on the Staff's knowledge of the reactor trip and LOCA emergency procedures for B&W plants. No discussions were presented of the manual actions required by similar emergency procedures of other NSSS designs. Yet, based on this review, the Staff concludes the plant should be modified to reduce or eliminate manual immediate action for emergency procedures. This conclusion is not valid in the case of Oconee. Section 3.0 provides our basis for these conclusions.

In the area of operator training, the Task Force concluded, based on a survey of B&W training coordinators, that little formal instruction has been given to date. In the case of Oconee and Duke Power, this conclusion is erroneous.

Duke Power trains its operators, and in instances where they need to be promptly made familiar with an event at a similar plant as it affects Oconee, B&W would not be doing the training. It is inappropriate that the NRC base its conclusion on a survey of individuals who would not be involved in the training aspect of interest.

Duke did train its operators on the vital aspects of the Crystal River transient shortly after it occurred. The operators were made aware of the key events of the transient and how similar events would affect Oconee. They were briefed on the hardware and procedural changes that were made as a result of the transient as they are for all changes made to the plant. It is considered that these actions are sufficient for the operators involved and are consistent with other training demands. As with all significant events, this event will be incorporated in the appropriate lecture segment of the requalification program.

2.0 EVALUATION OF EMERGENCY PROCEDURES

A thorough review of the operator actions required in the immediate actions section of Oconee Emergency Procedures was conducted. It is considered that those actions which are manual, versus automatic, should remain so and that those actions are necessary yet their result is to minimize and/or reduce adverse transients and are not absolutely essential to the safe operation of the plant. Many of the items listed as manual actions are verifications of various automatic actions. The "actions" simply assure the correct functioning of automated equipment and often involve simply monitoring meters and gauges. These verifications are necessary to

identify problems which are usually simply corrected by merely realigning pumps or establishing predetermined alternate flow paths. The following is a list of other actions which may be required in certain of the procedures. The possibility of automating the function and the need for the action is discussed in the commentary.

(a) Increase Letdown Flow (open HP-7)	In various loss of heat sink events RCS swell should be corrected if possible without PORV or code safety lifting. Action not readily automated since improper actuation would worsen certain other transients.
(b) Manual Trip Reactor	In many instances it is appropriate to shut the reactor down thereby reducing the heat being put into the RCS. Action is taken in circumstances where automatic trips do not occur. Most of the situations are of an anticipatory nature thereby reduce the severity of the transient.
(c) Isolate Letdown (close HP-5)	The letdown flowpath is isolated to minimize the effect of RCS shrinkage following reactor trips. Automatic actions will eventually restore RCS volume. Automation would present undue risk during other transient conditions. (Additional discussion of the effect of this action is provided in Attachment 1.)
(d) Maintain LDST Level or align HPI pump suction to BWST (open HP-24)	Action assures source of borated water to the HPI pumps. Automatic switchover in the absence of ES actuation is not thought to be necessary or prudent.
(e) Start HPI Flow through injection loops (throttle open HP-26 and align/start additional HPI pump to BWST)	Action not essential to safe operation but allows normal monitoring of RCS conditions. (Additional discussion of the effect of this action is provided in Attachment 1.)
(f) Shutoff Bleed Transfer Pumps	Required during boron dilution events to correct possible source of dilution automation would be impractical. Unambiguous indications of dilution readily observable and actions are not burdensome.
(g) Achievable Natural Circulation (Primarily Verification)	Achieving natural circulation is automatic if several parameters are in acceptable ranges. Verification and corrective actions are more practical than attempting to predict every possible set of conditions.

(h)	Establish conditions whereby unit(s) can be controlled from Auxiliary Shutdown	In events requiring evacuation of the Control Room, certain actions are desired but not necessary. Automation would be highly impractical and unnecessary.
(i)	Stop All Reactor Coolant Pumps	In certain scenarios (to prevent damage to RCP's or to prevent void transfer into core) stopping RCP's may be desirable. Subject is being discussed between utilities/vendors/staff.
(j)	Minimize Flow to Turbine Building (Close turbine bypass, stop CCW flow, etc.)	In case of flooding, it may be necessary to minimize water sources to the turbine building. Potential for inadvertent actuation at inappropriate times with adverse effects prohibits automation.
(k)	Line up CT-5 to Lee Direct	During certain loss of power scenarios manual lineup to Lee is required. This is a backup to the normal sources of emergency power. Automation is not appropriate nor required.
(l)	Isolate Faulted Battery	Certain battery failures may require isolation subsequent to operator review. Automation not practical.
(m)	Trip Service Water Pumps and secure other non-essential CCW cooling	In loss of CCW canal scenarios, manual action must be taken to minimize CCW usage. Potential hazard of inappropriate automatic action precludes automation.
(n)	Manually initiate HPI and restart RCP's	In certain conditions, anticipatory manual initiation of HPI may prevent or minimize severity of transient conditions (such as loss of FDW while in natural circulation). Automatic action is not prudent.
(o)	Trip main FDWP, and operate EFDW valves with nitrogen supply	During loss of instrument air, manual action required to correct resulting events. Automation for very narrow scenario is imprudent.
(p)	Manually transfer power source from KI to "AC Line"	This action is required in the event that automatic transfer has failed. (This type of occurrence is discussed in more detail in Attachment 3.)

3.0 EVALUATION OF TASK FORCE RECOMMENDATIONS

Recommendation 11

Modifications should be made to the plant, to the extent feasible, to reduce or eliminate manual immediate action for emergency procedures.

Evaluation

Based on our review, as discussed in the preceding section, the actions currently required of the operators are necessary and appropriate and no further action in response to this recommendation is necessary.

Recommendation 13

Lectures should be developed and given promptly to all licensed personnel concerning the Crystal River 3 event as well as their plant-specific loss of NNI/ICS analysis. A means to evaluate the training (e.g., quizzes) should be included. This training should be audited by the Office of Inspection and Enforcement.

Evaluation

Based on our review of the training program in effect at Oconee, it is considered that the intent of this recommendation has been met and that no further action is necessary.

Recommendation 14

Licensees should develop and implement promptly plant procedure concerning the loss of NNI/ICS power.

Evaluation

Contrary to the Task Force report, Rancho Seco was <u>not</u> the only facility having procedures that included the effect of the loss of power supply on the total plant. Our letter of March 12, 1980 discussed the emergency procedures which were implemented following the Oconee 3 transient November 10, 1979. Subsequently, these procedures have been revised and confirmed to be valid by the performance of a test on all Oconee units. No further action in response to this recommendation is deemed necessary.

Recommendation 15

Mandatory one-week simulator training should be required for all licensed B&W operators. The training should be oriented toward or include undercooling and overcooling events, solid system operation, and natural circulation cooling. Upgrading of simulator performance in accordance with the recommendations of the TMI-2 Action Plan (NUREG-0660) should be expedited.

Evaluation

As discussed in the report, Duke currently includes simulator training in the operator requalification program. Duke has discussed implementation of

the requirements in NRC letter of March 28, 1980 concerning qualifications of reactor operators. As a result of such discussions, it is considered that the Duke program as implemented meets the intent of the requirements. As such, no further action is deemed necessary in response to this recommendation.

ATTACHMENT 5

OCONEE NUCLEAR STATION

CONTAINMENT PURGE ISOLATION SYSTEM

OCONEE NUCLEAR STATION

INVESTIGATION OF THE NEED FOR
SAFETY-GRADE CONTAINMENT PURGE ISOLATION ON HIGH RADIATION

1.0 INTRODUCTION

NUREG-0667, entitled "Transient Response of Babcock & Wilcox - Designed Reactors", recommended that safety-grade containment high radiation signals be provided to initiate containment purge isolation in addition to the present signals. Currently, the purge system is isolated upon receipt of an Engineered Safeguards (ES) high containment pressure signal at 4.0 psig or low reactor coolant system pressure signal at the ES setpoint of 1500 psig. In addition, the purge isolation and control valves are closed upon receipt of a high radiation signal from unit vent gaseous monitor RIA-45. The purpose of this review is to 1) identify possible scenarios which might require purge isolation on high radiation and 2) evaluate the qualification of the currently installed radiation monitor interlock.

2.0 EVALUATION

2.1 Scenarios of Potential Concern

There are two classes of transients which could result in leakage of reactor coolant but which would not necessarily result in timely automatic containment isolation: 1) overpressure events due to extended loss of feedwater followed by cycling of the pilot-operated relief valve and/or pressurizer safety valves until the quench tank is overpressurized and the rupture disk blows out; and 2) very small loss-of-coolant accidents which do not depressurize the RCS to the low pressure setpoint and which require a long period to increase containment pressure to the high pressure setpoint. Core damage does not result from either of these two types of events. Thus, only normal RCS activity is available for release. Since these events result in relatively small quantities of lost reactor coolant, and since the contamination levels are low, ample time is permitted for assessment of the conditions by the operator and subsequent action to isolate the purge system, should it be in operation.

2.2 Current Isolation System

The containment purge system consists of an inlet line and an outlet line which can be isolated by closure of one of three valves in each line. Each line has an electric motor-operated valve inside containment and two pneumatically operated valves outside containment. Closure of all six valves is initiated by actuation of ES Channels 1 and 2 on high containment pressure or low reactor coolant pressure, providing diverse isolation signals as required by NUREG-0578. In addition, the pneumatically operated valves, valves PR-2, PR-3, PR-4

and PR-5, all receive a closure signal on high radiation. Upon reaching a high radiation setpoint, the unit vent gaseous monitor, RIA-45, generates a signal which causes the solenoid valves which supply air to open the purge valves to deenergize, resulting in closure of the valves. This signal is sealed in, so that resetting the radiation monitor will not result in reopening of the valves. The procedure for startup of the purge system requires a verification that RIA-45 and the unit vent particulate and iodine monitors are operable. The procedure contains additional instructions to assure that the unit vent monitoring is observed closely so that alarm limits are not reached. Assured power to the monitor is provided from a 120 VAC non-load shed panelboard. Thus, although the monitor is not safety-grade, there is reasonable assurance that it will fulfill its function.

3.0 CONCLUSION

A safety-grade high radiation containment isolation signal would effect isolation of the purge system only for classes of transients which would otherwise have very minimal consequences. The delay in achieving isolation by operator action results in only very small releases. This is supported by the discussion in Section 7 of NUREG-0667, which concludes that implementation of such a system would have very little impact on risk reduction. This already small risk is further reduced by the control-grade high radiation signal for purge isolation which is currently provided. Additionally, Duke Power Company has already taken steps to minimize purging while at power operation. The probability of the occurrence of one of the transients discussed during operation of the purge system is therefore very small. Thus, the recommendation does not appear to be justified, and no further action in response to this item is necessary.

ATTACHMENT 6

OCONEE NUCLEAR STATION

MISCELLANEOUS ITEMS

OCONEE NUCLEAR STATION

MISCELLANEOUS ITEMS

1.0 INTRODUCTION

Within NUREG-0667, "Transient Response of B&W Designed Reactors", recommendations were made on various plant systems. The function of this report is to address the validity and appropriateness of these recommendations to Oconee Nuclear Station.

2.0 EVALUATION OF RECOMMENDATIONS

Recommendation 6

A minimum set of parameters should be established to enable the operator to assess plant status. The set recommended by the Task Force follows:

(a) Wide range reactor coolant system pressure,

(b) Wide range pressurizer level,

(c) Wide range reactor coolant system temperatures: hot leg (each loop), cold leg (each loop), and core outlet (two or selectable),

(d) Makeup tank level,

(e) Reactor building pressure,

(f) Wide range steam generator level (both OTSG's),

(g) Wide range steam generator pressure (both OTSG's),

(h) Source range nuclear instrumentation, and

(i) Intermediate range nuclear instrumentation,

(j) Borated-water storage tank (BWST) level.

The instrumentation for the selected parameters must meet the following requirements:

(a) The instrumentation must be reliable and redundant and should meet all applicable codes and standards for protection system instrumentation; and,

(b) In accordance with safety standards, these require a minimum of two redundant channels of all designated information. At least one channel of which shall be recorded automatically on a timely basis for use in trending, instant recall, and post-event evaluation.

Evaluation

Duke Power agrees that a minimum set of parameters should be established to enable the operator to assess plant status. To this end, Duke engineers have actively participated in industry efforts in this area, particularly the AIF Subcommittee on Safety Parameter Integration. Duke endorses this subcommittee's efforts and considers that results, upon implementation by Duke, will effectively meet the intent of this item.

Recommendation 7

All B&W plants should provide the flexibility to substitute appropriate combinations of incore thermocouples for the loop resistance temperature detectors (RTDs) presently used for primary temperature input to the subcooling meter. All B&W plants should provide the capability of having a continuous or trending display of incore thermocouples. This display need not be indicated in the control room at all times but may be called up on demand from the computer.

Evaluation

The existing process computer system is used for saturation calculations at Oconee. The saturation calculations function was incorporated shortly after TMI occurred and provides saturation temperature and pressure margin calculations for each loop utilizing the loop resistance temperature detectors (RTDs) and loop wide range (WR) pressure reading. In addition, a saturation temperature and pressure margin is calculated for the core using the 52 incore thermocouples and core pressure reading. The hot leg RTDs providing input to the computer system from the ICS receive their source of power for signal conversion from a high reliability static inverter system which has several levels of backup power from a non-load shed supply. However, the loop resistance temperature detectors (RTDs) -- hot leg and outlet -- are validity checked and substitutive action is taken if either is found to be invalid. Upon determination of loss of ICS power, the hot leg temperature for each loop is set to a value of zero (0), thereby forcing the calculation to use the non-ICS outlet temperature associated with each loop. This was necessary since the hot leg temperatures fail to a value of 350°F upon loss of ICS power. Each incore thermocouple signal is range checked against the weighted average of the incore thermocouple signals and any invalid signal is discarded and a new average is calculated. Substitution of combinations of incore thermocouples for loop resistance temperature detectors (RTDs) is not provided due to the fact that three (3) individual saturation temperature margins are calculated, one for each loop as well as the incore thermocouples.

The system at Oconee permits the operator to obtain incore thermocouple readings in three forms:

a. A hardcopy digital trend capability is available through the output typers.

b. Incore thermocouples can be displayed on the CRTs mounted on the main control board.

c. The operator may select incore thermocouples to be trended on computer driven trend recorders on the main control board.

Output of the saturation condition values is provided by display on the CRTs located in the control room, hardcopy digital trend capability, and continuous margin value output (provided by 5 second updating of performance indicators located on the main control board).

Based on our review of the design of Oconee, the intent of this recommendation is met and no further modifications are necessary.

Recommendation 17

In order to provide an alternative solution to PORV unreliability and safety system challenge rate concerns, the following proposal (submitted by Consumers Power Company) should receive expenditious staff review for possible consideration and backfit on all B&W operating plants:

(a) Provide a fully qualified safety-grade PORV;

(b) Provide reliable safety-grade indication of PORV position;

(c) Provide dual safety-grade PORV block valves, capable of being automatically closed if a PORV malfunction occurs;

(d) Complete a test program to demonstrate PORV operability;

(e) Install safety-grade anticipatory reactor trip on total loss of feedwater; and

(f) Reset the PORV and high-pressure trip setpoints to their original values of 2255 psig and 2355 psig, respectively.

Evaluation

Duke agrees that the staff should expeditiously review the Consumers proposal. However, this solution is not necessarily suitable for backfit on operating B&W plants, particularly Oconee.

In response to the individual concerns included in this recommendation, the following statements are provided:

(a) Duke has supplied a description of Oconee PORV power supplies in response to NUREG-0578. This has been reviewed by the NRC staff as found in accordance with the requirements. As far as the fully qualified safety-grade PORV is concerned, Duke has committed to participate in the current EPRI program. When this program is complete, Duke will view its applicability to Oconee and make any necessary changes at that time.

(b) An acoustical monitoring system has been installed on each Oconee unit to monitor the position of PORV and safety valves. This acoustical monitoring system is similar to those found acceptable by the staff for this purpose for other pressurized water reactors. It is a reliable, single channel system, powered from a battery backed vital bus. It will provide the operator with positive indication of valve position and an annunciation of an open valve in the control room. The valve position indication components have been seismically and environmentally qualified as appropriate for conditions applicable to their location.

Backup valve position indication is provided by temperature sensors located downstream of the PORV and safety valves and by the quench tank level indicator.

The staff has reviewed the design and concluded that Oconee is in compliance with requirements for direct indication of PORV and safety valve positions.

(c) In response to an NRC letter dated May 7, 1980, which requested commitments to complete five additional TMI-2 related requirements, Duke committed in a letter dated June 13, 1980, to provide a report on overall safety effect of the PORV isolation system (NUREG-0660, Item II, k.3.2) and, if deemed necessary, modify the system appropriately.

(d) As pointed out in item 17 (a), Duke Power is participating in the EPRI program to demonstrate PORV operability.

(e) Duke Power presently has a control grade anticipatory reactor trip on total loss of feedwater installed on all three Oconee units. This control grade trip will be upgraded to safety grade.

(f) Duke Power is in agreement with resetting the PORV and high pressure trip setpoints to their original values.

Based on our review of the design of Oconee and on efforts currently underway in the areas of relief valve testing and PORV isolation system review, no additional actions are necessary.

Recommendation 21

The need to introduce auxiliary feedwater through the top spray sparger during expected transients should be reevaluated by licensees. This reevaluation should consider the reduced depressurization response if auxiliary feedwater could be introduced through the main feedwater nozzle and enter the tube region from the bottom of the unit.

Response

The original design considerations for high injection of AFW, and the benefits and potential problems associated with injecting AFW through the main feedwater nozzles have been reviewed. Based on this review, it has been concluded that this change should not be pursued. The NUREG-0667 recommendation was made to address a concern of potential overcooling.

One function of the auxiliary feed header is to inject feedwater into the steam generator upon loss of all four reactor coolant pumps. This elevated injection enhances the capability to establish natural circulation of the reactor coolant by providing a high effective thermal center in the OTSG. In addition, in the event that both main feed pumps are lost, auxiliary feedwater is used to provide secondary heat removal capability. If a steam generator dryout condition precedes AFW initiation, this means of adding AFW minimizes thermal shock of the steam generator vessel wall and lower tube sheet by providing some heating of the feedwater.

Injection of AFW through the main feedwater nozzles will require a relatively larger steam generator inventory to establish natural circulation due to the lower thermal center. Therefore, for the same AFW flowrate, it will require a longer time to establish a natural circulation condition. Potential overcooling effects with lower AFW injection will still exist unless automatic or manual control action is taken.

There are also structural concerns associated with injecting AFW through the main feedwater nozzles during expected transients. The service life of the main feedwater nozzles would be shortened due to thermal fatigue effects associated with cold auxiliary feedwater and increased usage. The thermal shock effects associated with the introduction of cold auxiliary feedwater to the shell and lower tube sheet would also be significant and may be unacceptable. A dry steam generator condition prior to AFW initiation would aggravate this concern due to the lack of aspirating steam for feedwater heating in the OTSG downcomer. In addition, use of the main feedwater nozzles for AFW injection would increase the potential for water hammer damage to the main feedwater lines and header.

In summary, any potential reduction in overcooling through the use of the main feedwater nozzles for AFW injection are far outweighed by the potential problems, both operational and structural, associated with this change. No further action in response to this recommendation is deemed necessary.