HOLTEC INFORMATION BULLETIN (HIB)*

Parsing the present to protect the future

Title of the Bulletin: VCT Restraint Strap Weld Failure

CoC Holder:	Holtec International	HIB No. (sequential):	67	**Revision Log:**	Name	Date
System Name:	Lift System VCT	Ref. Nuclear Plant:	Diablo Canyon Power Plant	Author (Rev. 0):	Arthur Barrett	7/28/15
				Reviewer (Rev 0):	Robert Tindal	7/28/15
Holtec Program No.:	1027	Period of Occurrence (m/y):	05/2015	Author (Rev. 1):		
				Reviewer (Rev 1):		
Affected Component(s):	Diablo VCT	Affected equipment or part	Diablo Lift Systems VCT	Author (Rev. 2):		
				Reviewer (Rev 2):		

POLICY STATEMENT & APPLICABILITY

The Holtec Information Bulletin (HIB) is principally used by the company to document relevant industry events pertaining to fuel storage at nuclear plants and to disseminate the knowledge gleaned from such events to the Holtec Users' Group (HUG) membership, the company's personnel, affected suppliers, and other stakeholders. While the great majority of the events cataloged in the HIBs focus on our system, a HIB may be issued on industry events involving another nuclear supplier system where the lesson learned can be beneficially applied in the Company's fuel storage program. A HIB is prepared, internally reviewed, and issued expeditiously after an event is determined by the company to be significant to warrant dissemination. HUG members are encouraged to contact NPD Program Manager to suggest events that merit a HIB. Revised versions of the HIB may be distributed as the analysis and evaluation of the event proceeds.

A HIB may also be issued to inform/alert our stakeholders of non-event derived information that is deemed to merit immediate release to assist the Company's customers. Such information may pertain to enhancements in system design/operations proactively developed by the Company or to identify latent errors/weaknesses in the Company's information base discovered from ongoing operations.

Finally, the Company uses the HIB as the vehicle, if applicable, to notify Part 71, Part 72 and Part 50 licensees of immediate and/or interim corrective actions to be taken in response to a development (such as notification of a potential Part 21 filing). HIBs are prepared by the Nuclear Power Division of Holtec International and are aimed to help improve the fuel management program of the Company and all of its customers/suppliers. Accordingly, the Company expects its clients and suppliers to take appropriate action pursuant to this bulletin. This bulletin is subject to internal reviews to ensure accuracy and clarity, and, as such, may be used in the corrective action process, if applicable, under the Company's QA program. This form is stored in g:\generic\HIB\ directory.

URGENCY LEVEL OF THIS NOTIFICATION

Level (use the legend ** below): 3

** 1. High (Immediate attention required by user); 2. Medium (Action by users should occur within a week of receipt); 3. Low (Any required actions should occur as soon as practical); 4. Non- consequential/For Information (No action is required by user)

Note: Severity level indicates the needed urgency of acting on this bulletin to insure safety of operating or soon -to- be -commissioned SSCs provided by Holtec.

ISSUE BACKGROUND & CATEGORIZATION

Background:

During the 2015 loading campaign at Diablo Canyon, the weld at the base of the strap cylinder mount of the VCT that holds the cask belly band failed while the band was being tightened around an empty HI-STORM. The belly band serves the purpose of keeping the HI-STORM or HI-TRAC in position during transport operations with the VCT. No injuries occurred as workers remained clear of all anchorage points as stressed in the pre-job briefs. Diablo Canyon conducted an official investigation of the incident and shared the results with Holtec.

Diablo Canyon has a Lift Systems VCT, which was the first generation of transporters supplied by Holtec to its clients. Upon review, Diablo's Lift System design is unique as it pertains to the strap cylinder mount and the weld at the base. The RH Chassis Assembly part number is identified as 103862. See below for the design and weld detail for the strap cylinder mount.

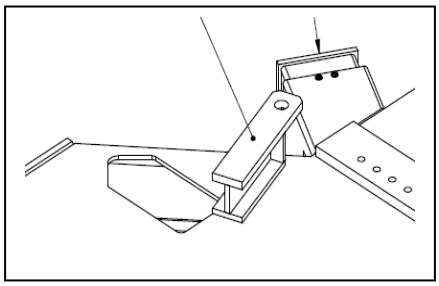

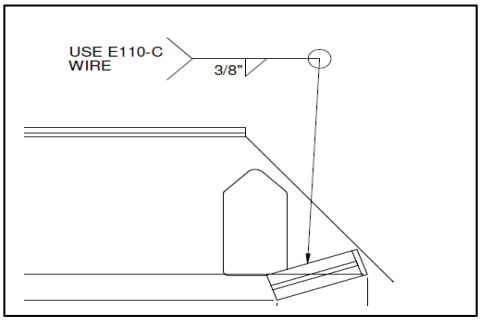

The Diablo VCT was designed to withstand a high seismic event as well be able to climb steep inclines. Therefore the belly band and cylinder are much larger than those provided with the standard VCT used at every other site. The failure of the weld occurred while tightening the belly band as required by procedure.

Thirteen (13) other Lift System VCT's were fabricated and delivered to clients. These thirteen other systems were reviewed and all had a different RH Chassis Assembly part number than Diablo's design. All but one had a 100393A part number. See below for the strap fitting mount for the other VCT's.

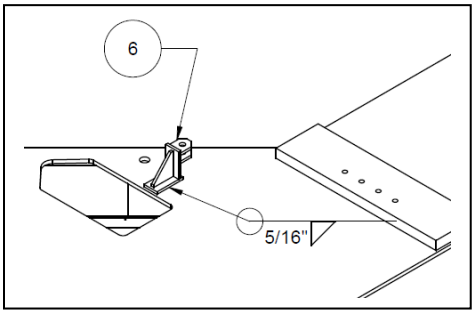

Diablo's investigation into the issue determined the potential cause to be a legacy issue with weld quality during original transporter fabrication along with the weld being undersized during fabrication.

As a corrective action, a weld repair of the failed belly band mount was performed by Diablo Canyon. In addition, the driver's side mount, which did not fail, was also proactively repaired as there were sections of weld not meeting the minimum weld size called out on fabrication drawing (see attached pictures). Once both sides were successfully repaired, the transporter was used to finish out Diablo's 2015 loading campaign with no further VCT weld issues reported.

A review of other Holtec supplied VCTs manufactured by both MMH/KoneCranes and J&R was performed

for each mounting system design. Both designs are shown below. J&R has the mounting welded to the underside of the VCT with a ½" all around fillet weld. MMH/KoneCranes design consisted of a pin connection with a welded subassembly to the VCT top deck. Both designs differ from the Lift Systems design and there is no reason to think that these designs are inadequate for their intended use.

J&R Engineering

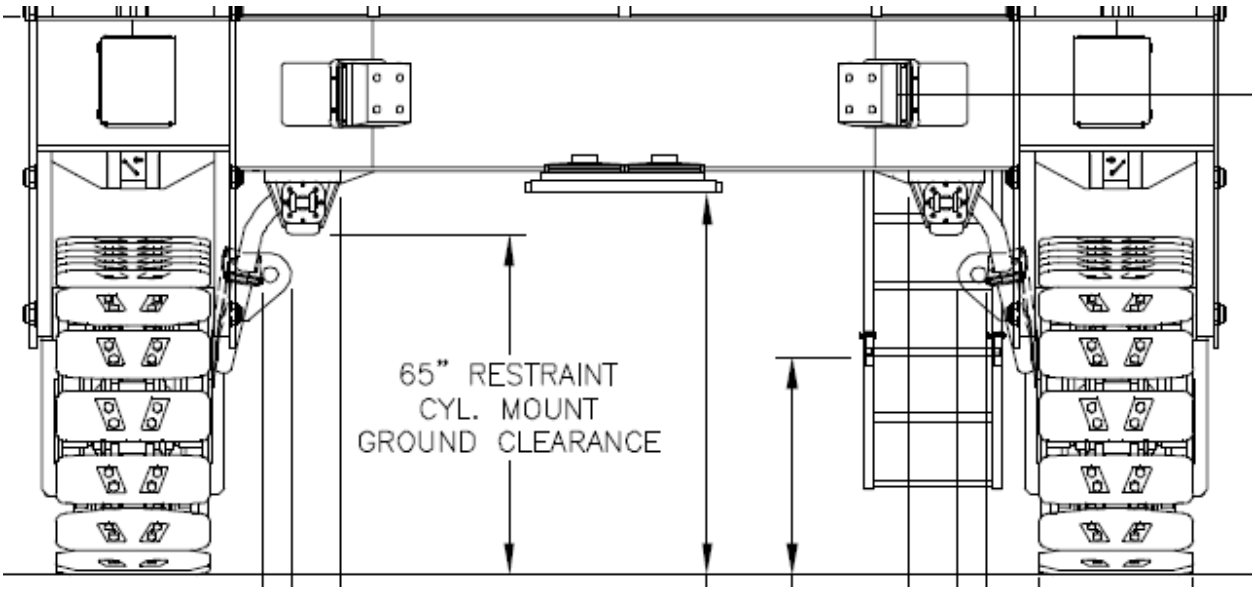

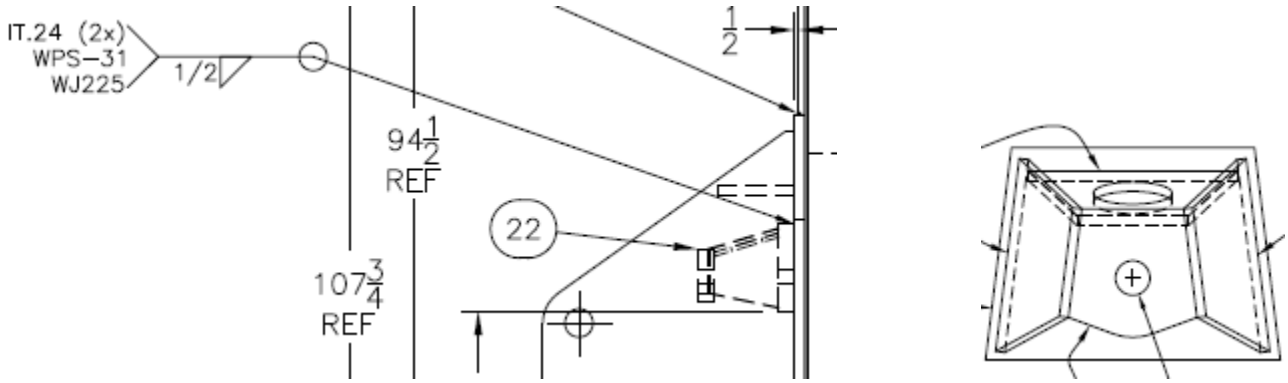

MMH/KoneCranes

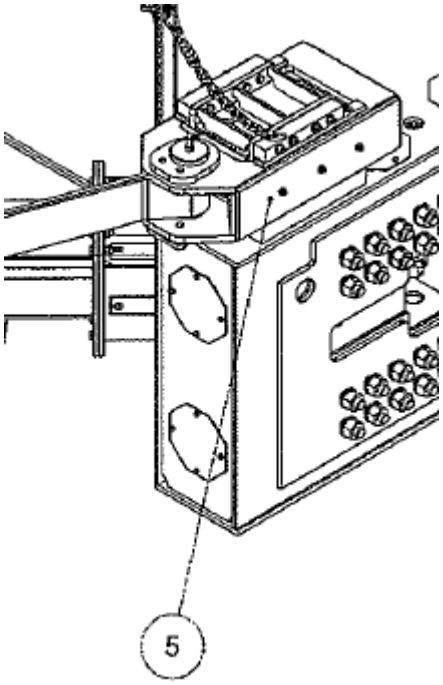

This issue is being treated as a defective weld issue on a Lift Systems manufactured machine supplied to PG&E. The weld was deficient in both size and quality. Probable Causes are laid out in the below section.

Event Category (Use Legend A* Below): G

****Legend A***: H: Holtec system related; P: Peer system related; G: Industry generic; Q: Guided by the Company's (proactive) quality initiative program

PROBABLE CAUSE (IF APPLICABLE)

Diablo's investigation into the issue determined the overall probable cause to be an issue with quality of the weld during original transporter fabrication. There were several contributing factors to the weld failure which are listed below:

- The weld performed on the VCT restraint strap mounts did not meet the minimum weld size of a 3/8" fillet weld specified by the drawing (pictures attached).
- The drawing calls for an all-around weld which was not possible as the mount partially extended over a cutout in the VCT deck for routing of hydraulic hoses. The weld ended adjacent to the cutout and did not wrap down and along the bottom of the mount to weld the transporter plate at the hole. If this had been done then the weld would have met the intentions of an "all around" fillet weld.
- Paint was present at the base metal where the mount was welded. Standard practices were not followed which led to the weld being deposited over a painted surface.
- Large porosity pores were noted in some portions of the failed weld, likely a result from welding on the painted surface.
- Lack of fusion at the weld root was noted in some instances.
- Rusting on the underside of the weld suggests this weld had failed over an extended period of time.

In addition, background on this unit's history revealed that in 2008 multiple cracks in welds were identified with the Diablo VCT and Holtec performed a root cause investigation 2008-4. All cracked welds were discovered on the chassis of the VCT but only critical load bearing welds were looked at, which would not have included the one which cracked during the 2015 campaign. The 2008 investigation identified one of the potential causes as thinner (3/4" and below) A514 base material not being preheated. This should not have been the case with this weld since it included base material which was ¾" and 1". The root cause investigation also identified that the only other VCT manufactured with an A514 chassis was the Cabrera VCT.

Although these previous issues cannot directly be a contributing cause to the current weld issue, they do provide value in tracking the legacy issues seen with this particular Lift Systems unit.

Cause Category (Use Legend B† Below): 8 (Describe Below)

†***Legend B***: (1) Weakness in Mechanical Design (inappropriate or unachievable tolerances, drafting error, etc.); (2) Unsuitable analysis (erroneous input data, inappropriate analysis methodology, or defect in the computer code utilized); (3) Improper material selection (poor weldability, machinability, lamination concerns, etc.); (4) Inadequacy in the client's ISFSI operation procedure; (5) Inadequacy in a procedure provided by Holtec; (6) Administrative deficiency (such as failure to transmit information to the Client); (7) Human Error; (8) Manufacturing Deficiency; (9) Error in procurement, (10) Not event based, part of quality enhancement initiative, (11) miscellaneous.

LESSONS LEARNED & GUIDANCE

(Describe Holtec's Planned Activities and guidance to other stakeholders to implement the Lessons Learned)

- Holtec recommends that all users owning a Lift Systems manufactured VCT add a visual inspection of the clevis to deck assembly weld into their VCT maintenance programs and perform this inspection prior to their next campaign. If there are visible cracks or stress induced defects to the weld, the weld should be repaired accordingly.
- Owners of J&R and MMH/KoneCrane manufactured VCTs may add the equivalent systems weld to their VCT maintenance programs as a defense in depth approach, however this matter is believed to be isolated to a single vendor at this time.
- Sites shall continue to stress the importance of situational awareness practices and instruct workers to stay clear of anchorage points in pre-job briefings.

REFERENCES

- Diablo Canyon Notification: 50701071
- Diablo Canyon Notification: 50701395
- Holtec International QI 1828, 5/15/2015

DISTRIBUTION: All members of the Holtec User Group (HUG), other stakeholder (clients, suppliers, etc). This bulletin is classified as non-proprietary (can be forwarded to third parties as appropriate).

ATTACHMENTS (List all attachments, if any): Photos (provided by courtesy of Diablo Canyon)


50THS
10THS


WELD FILL
WELDING ACCESSORIES AND
3/8"
9.5 mm
THE FIBRE METAL PRODUCTS
CONCORDVILLE PA


5/8"
15.9 mm
1/4"
6.4 mm
WELDING