REGULATORY INFORMATION DISTRIBUTION SYSTEM (RIDS)

ACCESSION NBR:8209140167 DOC.DATE: 82/09/10 NOTARIZED: NO DOCKET #
FACIL:50-287 Oconee Nuclear Station, Unit 3, Duke Power Co. 05000287
AUTH.NAME AUTHOR AFFILIATION
TUCKER,H.B. Duke Power Co.
RECIP.NAME RECIPIENT AFFILIATION
DENTON,H.R. Office of Nuclear Reactor Regulation, Director
STOLZ,J.F. Operating Reactors Branch 4

SUBJECT: Forwards response to 820623 request for addl info re damage, repair & replacement of auxiliary feedwater header. S66 RA

DISTRIBUTION CODE: A001S COPIES RECEIVED:LTR 1 ENCL 1 SIZE: 65
TITLE: OR Submittal: General Distribution

NOTES:AEOD/Ornstein:1cy. 05000287

	RECIPIENT ID CODE/NAME		COPIES LTTR	COPIES ENCL	RECIPIENT ID CODE/NAME		COPIES LTTR	COPIES ENCL
	NRR ORB4 BC	01	7	7				
INTERNAL:	ELD/HDS4		1	0	NRR/DHFS DEPY08		1	1
	NRR/DL DIR		1	1	NRR/DL/ORAB		1	0
	NRR/DSI/RAB		1	1	REG FILE	04	1	1
	RGN2		1	1				
EXTERNAL:	ACRS	09	10	10	LPDR	03	1	1
	NRC PDR	02	1	1	NSIC	05	1	1
	NTIS		1	1				
NOTES:			1	1				

TOTAL NUMBER OF COPIES REQUIRED: LTTR 29 ENCL 27

RO

DUKE POWER COMPANY
P.O. BOX 33189
CHARLOTTE, N.C. 28242

HAL B. TUCKER
VICE PRESIDENT
NUCLEAR PRODUCTION

TELEPHONE
(704) 373-4531

September 10, 1982

Mr. Harold R. Denton, Director
Office of Nuclear Reactor Regulation
U. S. Nuclear Regulatory Commission
Washington, D. C. 20555

Attention: Mr. John F. Stolz, Chief
Operating Reactors Branch No. 4

Subject: Oconee Nuclear Station
Docket No. 50-287

Dear Sir:

In response to your request for additional information dated June 23, 1982, please find attached a report on the Oconee Unit 3 Auxiliary Feedwater Header repairs. Information has been previously provided to the Staff in Licensee Event Report 82-06, dated May 14, 1982, with Revisions 1 and 2 dated June 14, 1982 and August 27, 1982 respectively. Meetings with the Staff in Bethesda on April 23, 1982 and June 24, 1982 were conducted to provide information and address Staff concerns. In addition, a detailed demonstration of the repair technique was provided to the Oconee Project Manager on August 19, 1982 during a visit to Oconee Nuclear Station. These more formal information exchanges as well as numerous informal status updates to the Project Manager and Region II representatives have attempted to keep the Staff informed of our efforts at Oconee Unit 3. This report provides a composite of the Oconee Unit 3 Auxiliary Feedwater Header damage and repairs, and addresses the June 23, 1982 Request for Additional Information as well as other known Staff concerns.

Duke Power Company does take exception to the statement made in your letter of June 23, 1982 that the repairs to the Unit 3 Auxiliary Feedwater Headers involve an unreviewed safety question. Your letter did not specify what the Staff considered to be an unreviewed safety question, and reviews by Duke Power Company have not identified any unreviewed safety questions as defined in 10 CFR 50 §50.59. Thus, the repairs described in this report are being made pursuant to 10 CFR 50 §50.59. However, Duke Power Company intends to cooperate fully with the Staff to resolve any uncertainties concerning our repair efforts.

Oconee Unit 3 is currently scheduled to be on line by October 14, 1982 with the Auxiliary Feedwater Header repairs being critical path. Recent repair efforts are ahead of schedule so an earlier restart (October 1, 1982) may be possible. Thus, prompt review of our submitted information is requested so that any Staff concerns may be addressed prior to restart.

I declare under penalty of perjury that the statements set forth herein are true and correct to the best of my knowledge, executed on September 10, 1982.

A001

Very truly yours,

Hal B. Tucker

JFN/php
Attachment

cc: Mr. James P. O'Reilly, Regional Administrator
U. S. Nuclear Regulatory Commission
Region II
101 Marietta Street, Suite 3100
Atlanta, Georgia 30303

Mr. Philip C. Wagner
Office of Nuclear Reactor Regulation
U. S. Nuclear Regulatory Commission
Washington, D. C. 20555

Mr. W. T. Orders
NRC Resident Inspector
Oconee Nuclear Station

B&W Utility Task Force
Mr. J. R. Lingenfelter, TECO
Mr. D. T. Perry, CPCo
Mr. R. P. Wickert, SMUD
Mr. R. H. Ihde, B&W
Mr. F. R. Burke, B&W

ATTACHMENT A

DUKE POWER COMPANY

OCONEE NUCLEAR STATION

UNIT 3

AUXILIARY FEEDWATER HEADER

DAMAGE, REPAIR AND REPLACEMENT

TABLE OF CONTENTS

LIST OF FIGURES

1.0 Introduction

There are two configurations of auxiliary feedwater (AFW) header assemblies which are used on the steam generators for Babcock & Wilcox's 177 Fuel Assembly Plants. The first type uses an external distribution header mounted outside the once through steam generator (OTSG) with nozzles penetrating the shell and shroud. The second type uses an internal distribution header mounted inside the OTSG. Recent inspections showed damage in the internal AFW headers at three plants: Duke Power Co., Oconee 3, Sacramento Municipal Utility District, Rancho Seco, and Toledo Edison Co., Davis Besse 1. Internal AFW header designs also exist at General Public Utilities, Three Mile Island (TMI-2), and Consumers Power Co. Midland 1 and 2 Units. TMI-2 has not been inspected, and Midland 1 and 2 are still under construction and have not begun commercial operation. The external AFW headers have operated for more than 22 reactor years with no evidence of damage. They are used at: Duke Power Co., Oconee 1 and 2, Arkansas Power & Light Co., ANO-1, Florida Power Corp. Crystal River 3 and General Public Utilities, Three Mile Island-1.

The purpose of this report is to describe the inspection, evaluation and repair activities related to resolving the damaged internal header problems which have occurred at the plants using that header configuration. It will also be used as a failure analysis report under the requirements of ASME Boiler and Pressure Vessel Code, Section XI, Article IWA 7000.

In the following sections of this report, facts will be presented to show that a logical cause has been established and that the intended repair prevents recurrence of that problem in both the non-functional internal header and the new external header. In addition, the report will show that the modified design provides all functional requirements previously provided by the internal header design. Based on these facts, the report will demonstrate that start-up and continued operation of the affected plants is justified.

1.1 Internal AFW Header Design

The internal AFW header is a rectangularly shaped torus fabricated of welded plate segments. The header is positioned on the upper end of the upper vertical cylindrical baffle (upper shroud) (See Fig. 1-1A &B). The header also serves as a continuation of the upper shroud to separate the tube bundle from the steam anulus. The header is positioned and retained by eight sets of inner and outer brackets welded to the bottom of the header and match drilled through the shroud. A dowel passes through each set of brackets and is welded to the inner bracket (See Fig. 1-2).

A single 3 1/2 inch diameter AFW nozzle delivers water to the header via a thermal sleeve which slip fits into the header (See Fig. 1-7). Water leaves the header through 60 - 1 1/2 inch diameter flow holes near the top of the inner header wall. The flow holes are equally spaced around the circumference. There are 8 - 1/4 inch diameter drain holes near the bottom of the inner vertical wall (See Fig. 1-2 and 1-4).

The auxiliary feedwater system piping connects to the AFW nozzle outside each steam generator. During power operation the internal AFW header, thermal sleeve, and a portion of the horizontal piping are filled with dry superheated steam.

The braket and dowel arrangement permits differential thermal movement of the internal AFW header in a radial direction during operation.

1.2 Internal AFW Header Functional Requirements

The internal auxiliary feedwater header provides three functions. The header distributes auxiliary feedwater whenever required over the steam generator tube bundle at a point just below the upper tubesheet. It also acts as an extension of the upper shroud which separates the tube bundle from the steam outlet anulus.

The third function is served while the plant is shutdown. When a plant is in wet lay up the header distributes water and chemicals, during fill and recirculation, to the top of the steam generator secondary side to insure a well mixed solution.

1.3 History of the Problem

In April, 1981 tube leakage was experienced at the Davis-Besse 1 Station. An eddy current (EC) inspection determined that two adjacent peripheral tubes were leaking. The elevation and circumferential location of the tube leaks were aligned with the location of a header bracket pin. An expanded eddy current inspection carried out in this generator in the areas near the other dowel pins identified one additional tube indication (ding) which could be correlated to a dowel pin location.

In May, 1981 tube leakage at Rancho Seco was identified. Although the leaking tube was adjacent to the inspection lane and not related to the header, an eddy current inspection was performed at all dowel pin locations. The inspection recorded dings in tubes at five of the eight dowel pin locations.

In February, 1982 a leaking tube at the bundle periphery was identified at Oconee 3. An eddy current inspection performed at four of the eight dowel pin locations recorded no tube indications.

As a result of these indications more EC inspections of the perhipheral tubes in the OTSG at Davis Besse 1 were planned for their 1982 refueling outage. As a result of these inspections visual examinations of the internal headers were made to check for loose dowel pins in the brackets attaching the internal header to the steam generator shroud. It was during this inspection that the header and bracket damage was first detected. The results of this inspection led to the inspections at Rancho Seco and at Oconee 3 which also employ the internal header design.

Following the preliminary inspections during April of this year at Davis-Besse and Rancho-Seco a meeting was held April 23, 1982, to provide the NRC staff with information then available on this problem. A follow-up meeting was held with the Staff on June 24, 1982 to provide information and address Staff concerns. Duke Power Company provided detailed descriptions of the damage and repairs in License Event Report 287/82-06 dated May 14, 1982 with Revisions 1 and 2 dated June 14, 1982 and August 27, 1982 respectively. Toledo Edison Company and Sacramento Municipal Utility District have also filed Licensee Event Reports with their regional NRC Inspection and Enforcement Offices and Consumer Power Company has filed a 10CFR50.55e Report with their NRC I&E

Figure 1-1A

177FA ONCE-THROUGH
STEAM GENERATOR (OTSG)
LONGITUDINAL VIEW

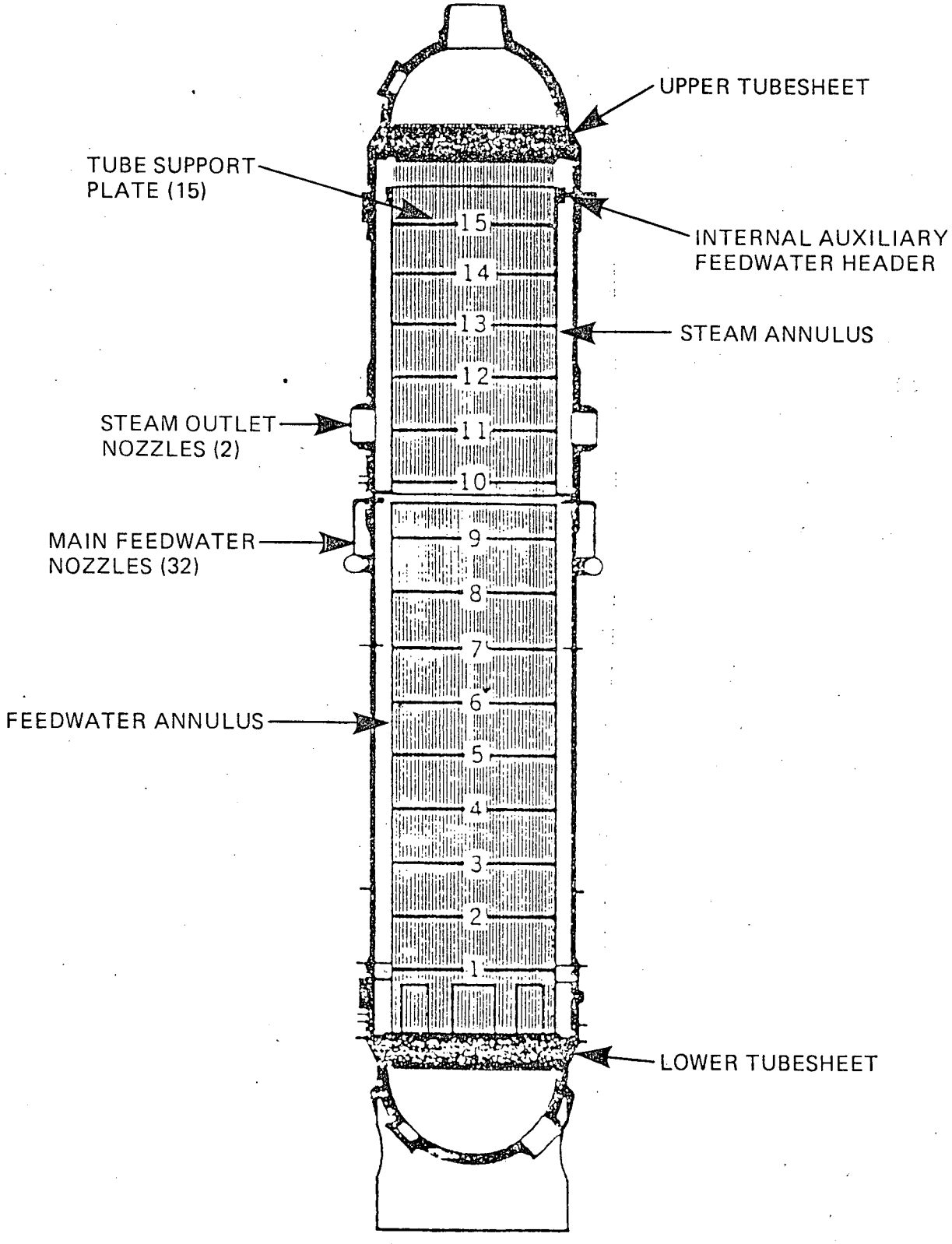

Figure 1-1B

ONCE-THROUGH STEAM GENERATOR
WITH INTERNAL AUX. FEEDWATER HEADER

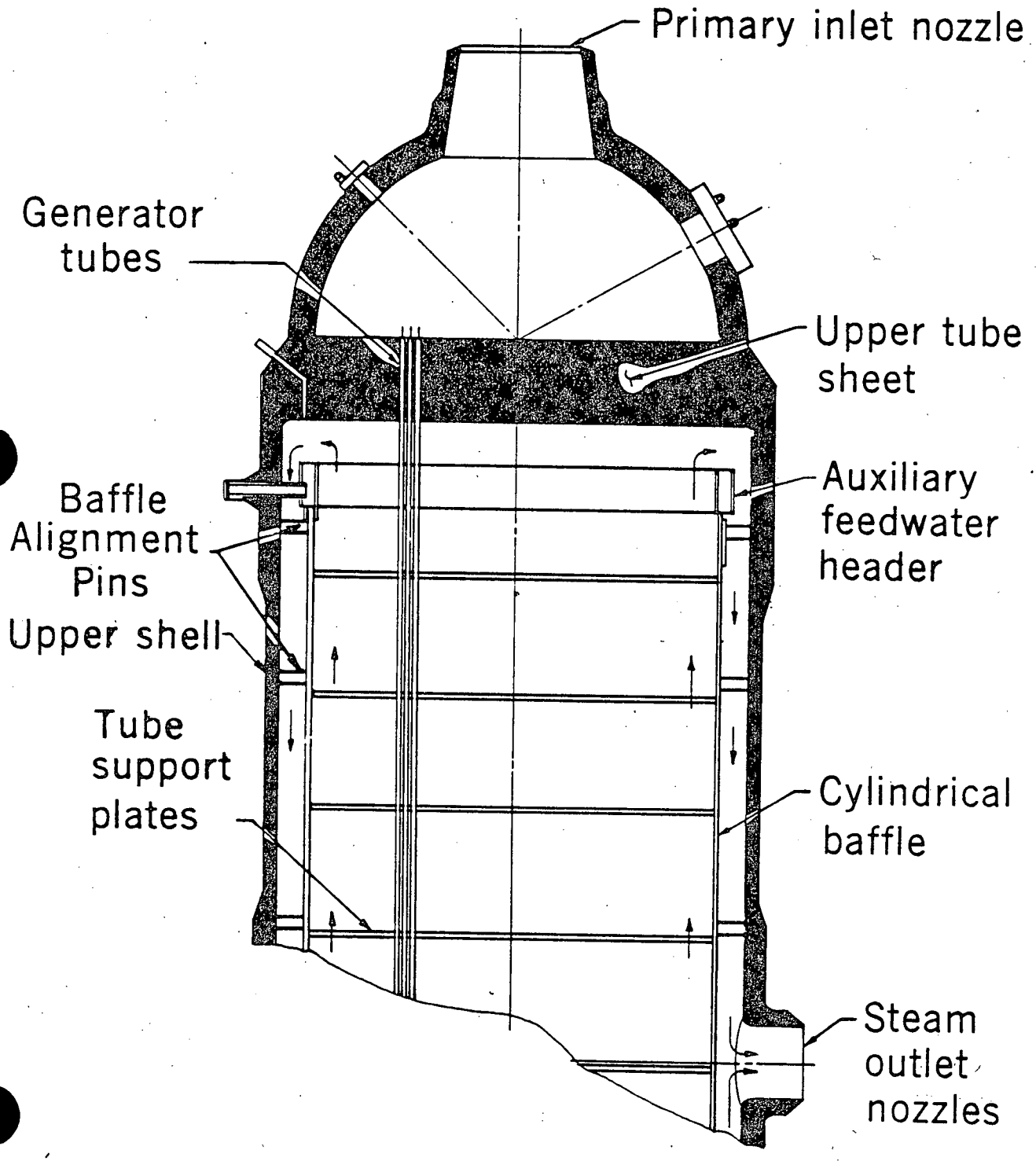

Figure 1-2

INTERNAL AFW HEADER DESIGN
LONGITUDINAL SECTION

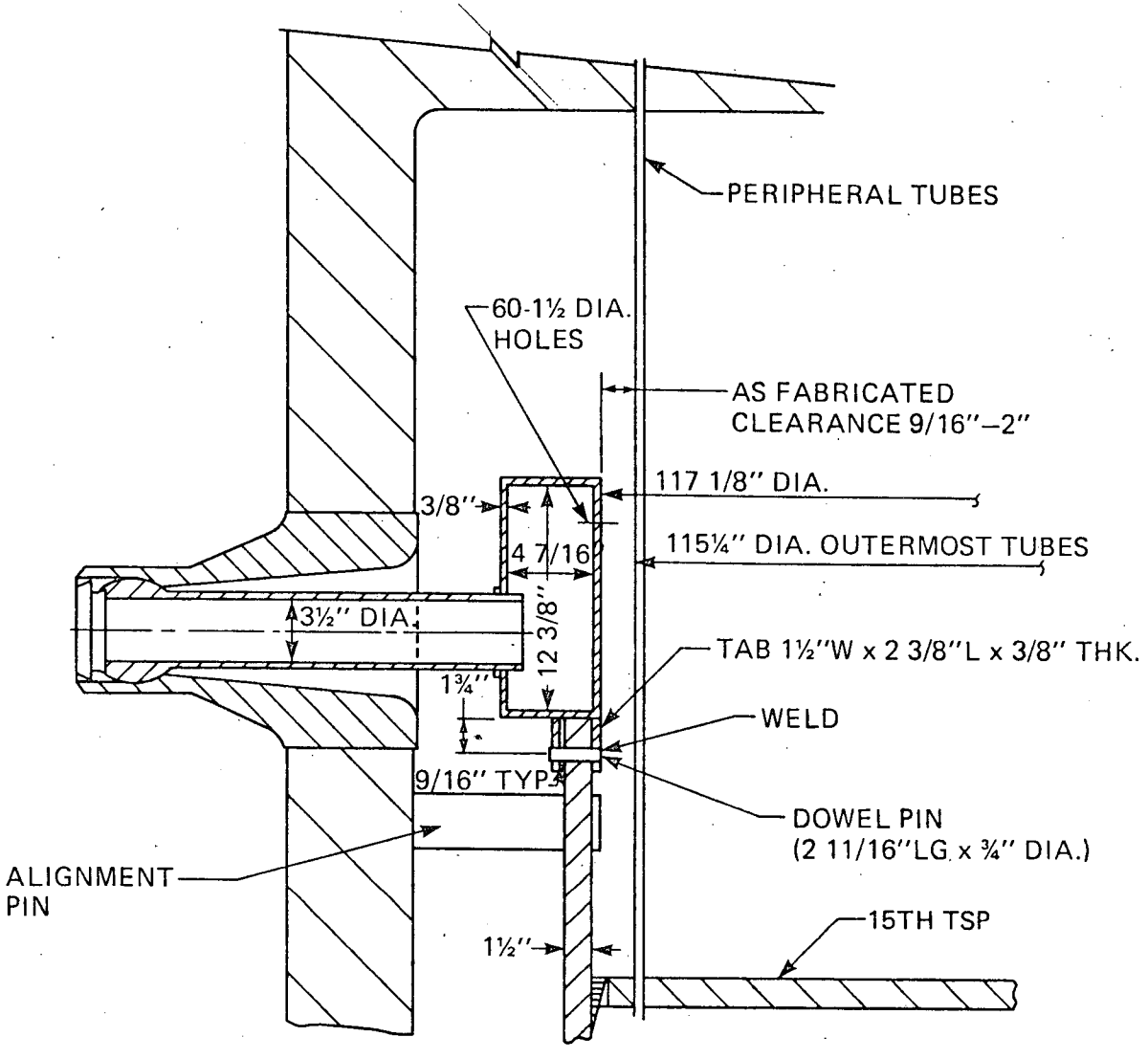

PLAN VIEW OF INTERNAL AUXILIARY
FEEDWATER HEADER

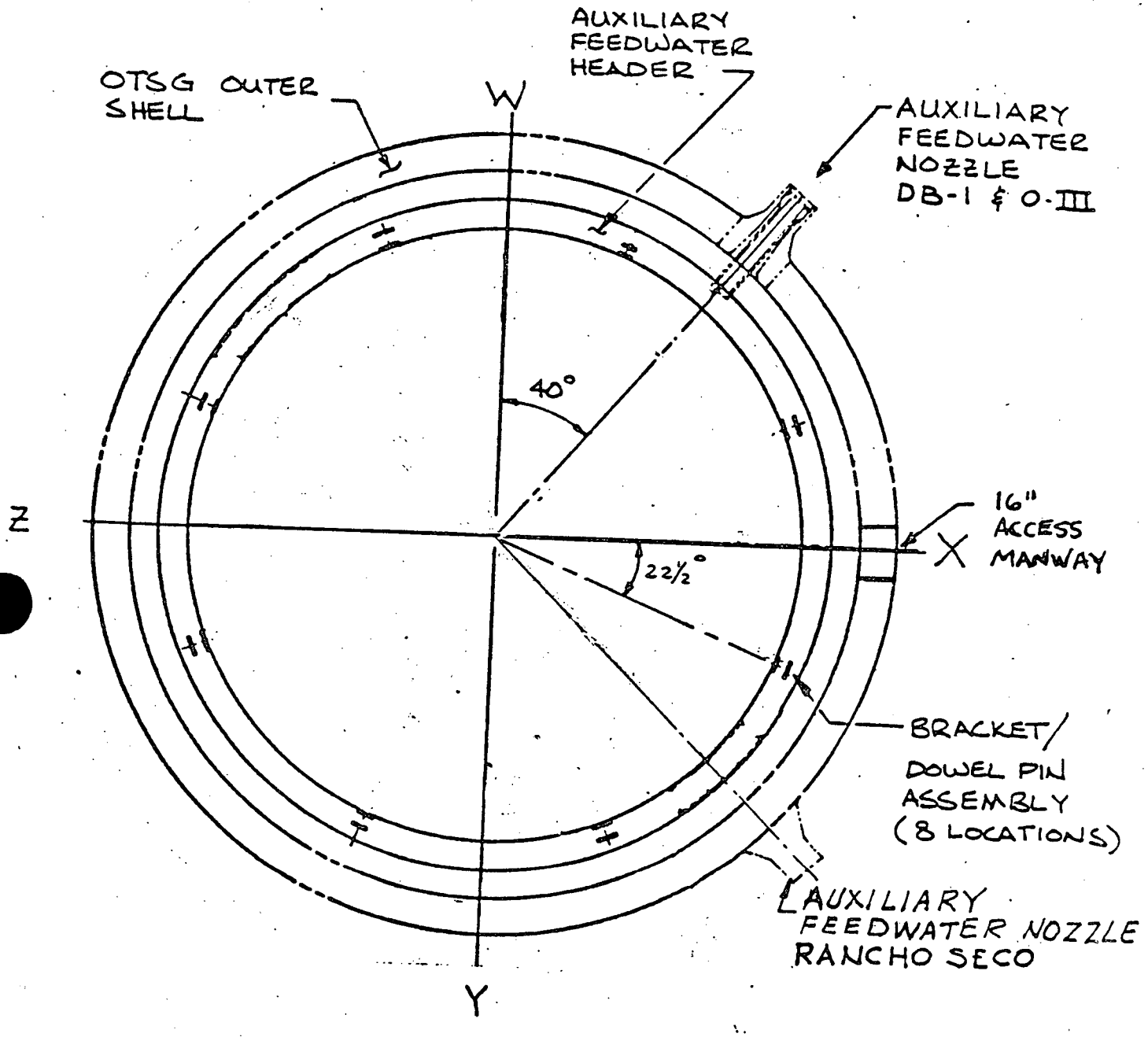

Fig. 1-3

LOCATION OF INTERNAL AUXILIARY FEEDWATER
HEADER FLOW HOLES

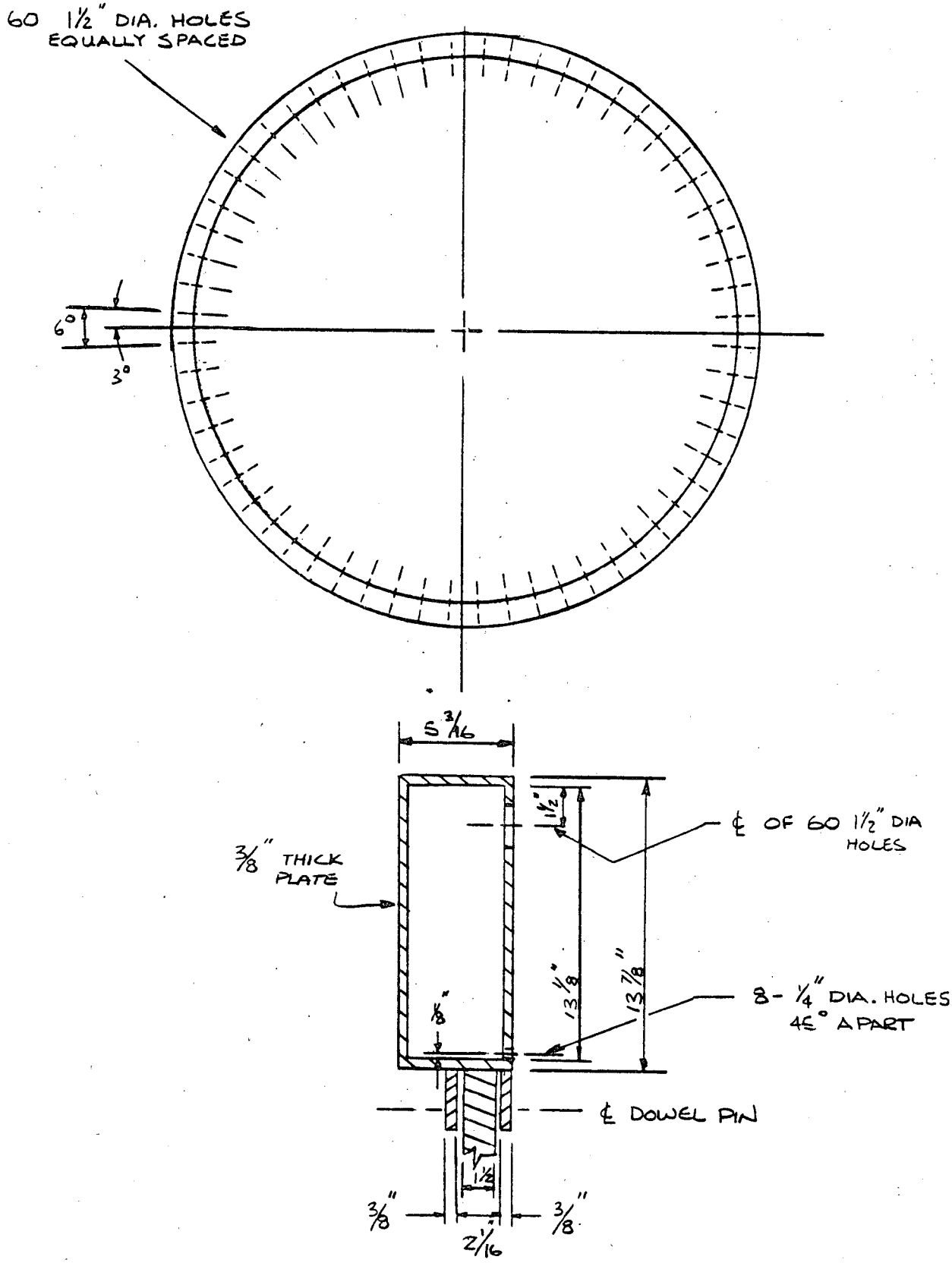

Fig. 1-4

regional office.

2.0 Site Inspections and Results

As a results of the 1981 eddy current inspections, additional inspections were intiated at Davis Besse 1 in March of this year during their planned refueling outage. The damage noted during that inspection and the absence of any plant specific cause suggested the need for inspection of Ranch Seco and Oconee 3 internal headers.

The site inspection techniques used for these inspections include direct visual inspection, dimensional measurement, fiber optics and remote TV camera viewing. In addition, eddy current testing (ECT) is being used to determine tube wall thinning. Debris analysis of the ECT data is used to indicate clearances between peripheral tubes and the inner most parts of the internal headers. Visual examinations along with ultrasonic (UT) and penetrant tests (PT) are also being performed to establish the mechanical integrity of the feedwater header plates and welds and the steam generator shell in the vicinity of the new AFW nozzle penetrations. These results and the status of inspections at the three plants are described in Sections 2.1 through 2.3.

With one exception, the inspection results from all three plants were generally similar. The outer vertical wall of the header was distorted inward toward the center of the generator, the support brackets were bent or damaged and the dowel pins were either out of position or missing. The exception was the presence of three holes in the parent metal plates of the headers at Oconee 3. Also, cracks were found in the corner welds of the headers at Oconee 3 and Rancho Seco.

Clearances between the inner wall and inner brackets and peripheral tubes have been inferred at Davis Besses and Rancho Seco to be minimal. It is postulated that the distortion of the outer vertical wall of the header has led to some inward bowing of the inner vertical wall and movement of the top and bottom corners of the inside of the header closer to the peripheral tubes. This bowing was checked by feeling the inner wall at Davis Besse 1 and SMUD after machining the access holes. This movement along with distortion of the inner brackets could also account for the apparent reduction of inner bracket to perhipheral tube clearance. The distortion of the header inner wall is indicated in Figures 2-1 and 4-1A. Oconee 3 headers were found to have the nominal as-built clearances between the headers and tubes.

UT of the shell and internal header nozzle region was performed prior to machining. These examinations showed those areas to be free of unusual or unacceptable indications.

At all three plants, some gaps were noted between the top of the shroud and the bottom of the header. These gaps varied from 0 to about 1/4".

2.1 Davis Besse 1 Inspection (Final)

During the 1982 refueling outage at DB-1, eddy current inspection identified a number of new indications in tubes corresponding to the dowel pin locations. In addition, a significant number of indications were recorded on peripheral tubes between the dowel pin locations. The indications correlated with the

top and bottom edge of the internal AFW header.

An expanded inspection program was initiated on both of the DB-1 OTSGs to characterize further the initial findings. This included:

- 100% peripheral tube eddy current inspection.
- Selected profilometry inspection of peripheral tubes with eddy current indications in the headers region.
- Secondary side visual inspection of the internal AFW header.

Eddy current inspection showed 24 peripheral tubes in the two generators had indications which were interpreted to show contact with the internal header assembly at some point in time. Of these 24 tubes, seven tubes had outside diameter (OD) indications, and 17 tubes had tube diameter reduction (ding) indications. Three of the OD indications exceeded the technical specification plugging limits of 40% through wall.

Eddy current debris analysis of the peripheral tubes indicated that the header was very near tubes around one axis and showed that there is only slightly more clearance at all other locations.

Profilometry indicated that the direction of the tube diameter reduction for tubes apparently in contact with the header was oriented toward the AFW header. The amount of tube diameter reduction is less than 20 mils.

A visual inspection of the internal headers, followed by a 360° remote video inspection, showed that the outer wall (shellside) of the header is distorted inward (concave) as much as 4 1/2". In addition, the inner vertical wall was noted to be bent inward in some locations. In one generator, the thermal sleeve was disengaged from the inlet hole of the header and was offset from the center of that opening. It was also noted that certain header support brackets were bent, the bottom ligament torn out, or were broken off and that there was evidence of wear and/or distress on dowel pins and brackets. Dowel pins were found to be not in place at the majority of the eight bracket locations in each of the steam generators (See Fig. 2-1). All brackets and all but one dowel pin have been located and retrieved. The missing dowel pin is not in the tube bundle or on the 15th tube support plate.

The internal AFW headers have been thoroughly inspected to assure that their structural integrity is adequate. Several inspection techniques were used depending on accessibility and the objective of the examination. These techniques included:

1) Direct vusual examination

2) Visual via remote TV camera - 3-5x magnification

3) Visual via fiber optics - 3-5x magnification

4) Ultrasonic testing (UT)

5) Dye penetrant testing (PT)

Figures 2-2 A, B, and C show the areas of the header that were examined to assure header stability.

The initial inspections of the DB-1 internal AFW headers were performed using a remote TV camera mounted on a track supported from the shroud alignment pins. The track and camera were rotated around the generator to provide a full 360° view of the header. Several passes were made with the camera at different elevations and orientations to provide a view of the accessible portions of the lower header plate, the outer vertical plate and the top header plate and their connecting welds. While some header blemishes were detected (subsequently reexamined and found inconsequential) in these examinations, no indications of cracks on other deformities which would detract from the structural integrity of the header were identified. Figure 2-2A shows the area encompassed by these inspections.

To provide some basis for the adequacy of the remote TV inspections, additional UT and PT examinations were performed on selected portions of the SG 2 header. The worst deformation of all the internal headers at DB-1, Oconee-3 and Rancho Seco occurred on SG 2 at DB-1 near the manway opening. Consequently, the vertical outer header plate was ultrasonicly tested in this area and a portion of the vertical plate, the lower plate, and connecting weld was dye penetrant tested. These tests showed that no cracks or other detrimental indications exist in the most severely deformed portion of the header. An additional dye penetrant test was performed on the back wall of the header through the AFW inlet nozzle. The PT showed no unusual indications. See Figure 2-2B for specific details of these inspections.

After the eight AFW injection holes were drilled in the shell and shroud of each Davis Besse steam generator, additional inspections of the internal header were performed at each of the hole locations to ensure header integrity. The bottom plate of the header was ultrasonicly tested for approximately one foot on either side of each hole to assure that the material was sound in the area of the tie-down welds (See Section 4.0 Description of Repair). These tests showed the metal to be of full thickness and free of cracks.

Following the discovery of weld cracks at Oconee-3 and Rancho Seco, additional inspections were performed at each hole location. These inspections were very similar in method and quality to those done at Oconee-3 and would have detected cracks similar to those observed at Oconee. Using a fiber optics device through the shell and shroud holes, an examination of the welds connecting the inner vertical plate to the top and bottom plates was performed. Approximately 6 to 8 inches of the lower weld on either side of the hole, and about 6 inches of the upper weld at each hole were examined. These inspections showed the welds to be free of cracks or other significant defects. Figure 2-2C illustrates the areas inspected at each injection hole location.

Althrough a complete inspection of all header plate material and welds was not possible, the extent, diversity, and quality of the examinations performed provides complete confidence that no undetected, gross, cracking phenomenon exists and that the headers are structurally sound.

Eddy current inspection will be performed after securing the header to the shroud to locate any wall thinned tubes that need to be stabilized and plugged and to verify that 1/8" clearance still exists between the header and brackets and the peripheral tubes.

2.2 Rancho Seco Inpsections (as of July 13, 1982)

Examination of the internal headers at Rancho Seco showed similar results. A 360° visual and video inspection of the two headers indicates that there is inward distortion of the outer vertical plate of the header. The concavity approached what was noted at Davis Besse 1. No misalignment of inlet thermal sleeves with the header inlet holes was noted although one sleeve was disengaged from the inlet hole in the header.

Visual inspection of the A steam generator indicated the inner wall of the header at top and bottom to have greater than 1/8" clearance between the header and peripheral tubes. However, four inner brackets appear to be less than 1/8" away from at least one tube. One dowel pin is not in place and the other seven are loose. The missing dowel pin has not been located or retrieved. One inner bracket has a crack in the weld attaching it to the header bottom but all the other 15 brackets are in place and appear to have sound welds.

In the B generator, clearance between the header and peripheral tubes is greater than 1/8". Five inner brackets are in contact with at least one tube, while three have at least 1/8" clearance. The outer brackets are in place with sound welds. Four dowel pins are not in place and four are loose. All missing dowel pins have been located and retrieved.

UT indicated no flaws or plate thinning in the lower plate of either header.

Eddy current inspection will be performed after securing the header to the shroud to locate any wall thinned tubes that need to be stabilized and plugged and to verify that 1/8" clearance still exists between the header and brackets and the peripheral tubes.

2.3 Oconee 3 Inspections

Because of the discovery of damage to the OTSG Internal Auxiliary Feedwater (AFW) Headers at Davis Besse (Toledo Edison) and Rancho Seco (Sacramento Municipal Utility District) the decision was made to shut down Unit 3 on the evening of April 23, 1982 and begin a refueling outage earlier than planned. (Units 1 and 2 utilize an external AFW header and are not subject to this damage.) After Unit 3 was cooled and drained, a visual inspection was begun on the evening of April 29, 1982, and it was reported early the next day that damage had been discovered somewhat similar to that reported by Davis Besse and Rancho Seco.

The following is a description of the observations made during the AFW header inspections. Figure 2-1 defines the steam generator axes and the bracket numbering sequence used in this description.

2.3.1 A OTSG

When viewed visually through the manway on the X axis, the header was distorted slightly toward the W axis and was considerably more distorted toward the Y axis. In all instances the distortion of the header resulted in the outer wall of the header being deformed toward the tubes (away from the shell). Approximately ten to fifteen degrees towards the Y axis, there appeared to be a vertical weld in the header. This area of the header was not deformed. The area of the header past this weld appeared to be severely deformed.

Inspections of the bracket/dowel pin locations using fiber optics and video cameras resulted in the following observations:

Bracket No. 1 - This bracket was intact. The dowel pin was in place and protruding from the bracket approximately 1/2 inch towards the shell. There appeared to be some possible wear on the pin, but neither the bracket nor the pin were significantly bent or damaged. In the general area between Bracket No. 1 and Bracket No. 2, a gap of <3/8 inch was observed over a distance of several feet between the bottom of the ring header and the top of the shroud. Tubes could be seen through the gap.

Bracket No. 2 - This bracket was very slightly bent towards the shell. There was no significant wear or ovalization of the bracket hole. The pin was observed to be recessed approximately 1/4 inch into the shroud. Some wear was observed on the face of the pin. The bracket header weld was intact.

Bracket No. 3 - This bracket was very slightly bent towards the shell. Slight wear was observed on the bracket hole, but no significant ovalization of the hole was observed. The dowel pin was completely out of the bracket but could be seen recessed into the shroud hole approximately 1/4 inch. The pin appeared to be in good shape. The bracket weld was not cracked. This bracket location was also observed from the inside of the header. The inside bracket was bent towards the tubes approximately one inch. The plug weld holding the pin to the bracket was broken. The pin was displaced from the bracket towards the tubes approximately 3/4" inch resulting in the pin almost and possibly touching a tube. There appeared to have been some erosion or wear on the tube where the dowel pin was in close proximity to the tube.

Bracket No. 4 - This bracket was bent approximately one inch out at the bottom. Some wear was observed on the dowel pin. The pin appeared to have moved towards the bundle but was still in the shroud and bracket. The dowel pin and the hole in the bracket were slightly misaligned due to the bracket being bent. The hole in the bracket did not appear to be ovalized or have any significant wear. The bracket weld was intact.

Bracket No. 5 - The bracket hole was elongated and worn and the bracket hole and shroud hole are misaligned. The dowel pin was present but recessed. The bracket to header weld looked good.

Bracket No. 6 - The bracket was pushed out from the shroud, the bracket hole appeared elongated, and the bracket hole and shroud hole were misaligned. The dowel pin was present, but appeared to be worn.

Bracket No. 7 - The bracket to header weld looked good, but the bracket looked battered. The dowel pin was present but slightly recessed.

Bracket No. 8 - The bracket was straight and the braket hole and shroud hole were properly aligned. The dowel pin was missing.

The auxiliary feedwater nozzle was closely examined where it enters the ring header between and X and W axis. The nozzle was still in the hole in the header. The distance between the collar on the nozzle and the header was approximately one inch. There appeared to be some wear on the nozzle adjacent to the header (between the header and the collar).

Visual inspection of the top, outside wall, and bottom of the header revealed a hole in the top plate (see Figure 2-3) and a hole and crack in the bottom plate (see Figure 2-4). While making the bulkhead repairs a small hole was found on the inner vertical wall at the elevation of and between two of the sixty 1 1/2 inch flow holes. This hole is radially at the same location as the hole shown in Figure 2-3. A localized area of corrosion was noted at each hole location on the inside surface of the header only.

2.3.2 B OTSG

Examination of this header visually through the manway revealed that it was considerably more distorted at the X axis location than the header observed in the A OTSG. There was distortion both in the W and towards the Y direction. No vertical weld locations could be discerned. All distortions again appeared as a bending of the outer wall of the header towards the tubes (or away from the shell).

The following is a description of the observations made during the AFW header inspections.

Bracket No. 1 - This bracket was only very slightly bent. However, no pin was observed in the bracket or in the shroud. The bracket weld was intact. The bracket hole showed no significant wear or ovalization.

Bracket No. 2 - This bracket was bent only very slightly. There was a slight offset between the bracket hole and the shroud hole. No pin could be observed in either the bracket hole or in the shroud hole. No significant wear or ovalization of the bracket hole was observed. This bracket location was also observed on the inside of the header. The bracket was only slightly bent towards the tubes. The dowel pin was missing. There was no evidence of tube bracket or tube-dowel pin contact.

Bracket No. 3 - This bracket was bent towards the shell and was the most deformed bracket that we observed during the inspection. It was bent approximately one inch towards the shell. The bracket header weld appeared intact. The hole was not significantly deformed in either the bracket or the shroud. No pin was observed in the bracket or in the shroud.

Bracket No. 4 - This bracket was only slightly bent. There was a slight gap between the header and the shroud through which one could see tubes within

FIG. 2-1

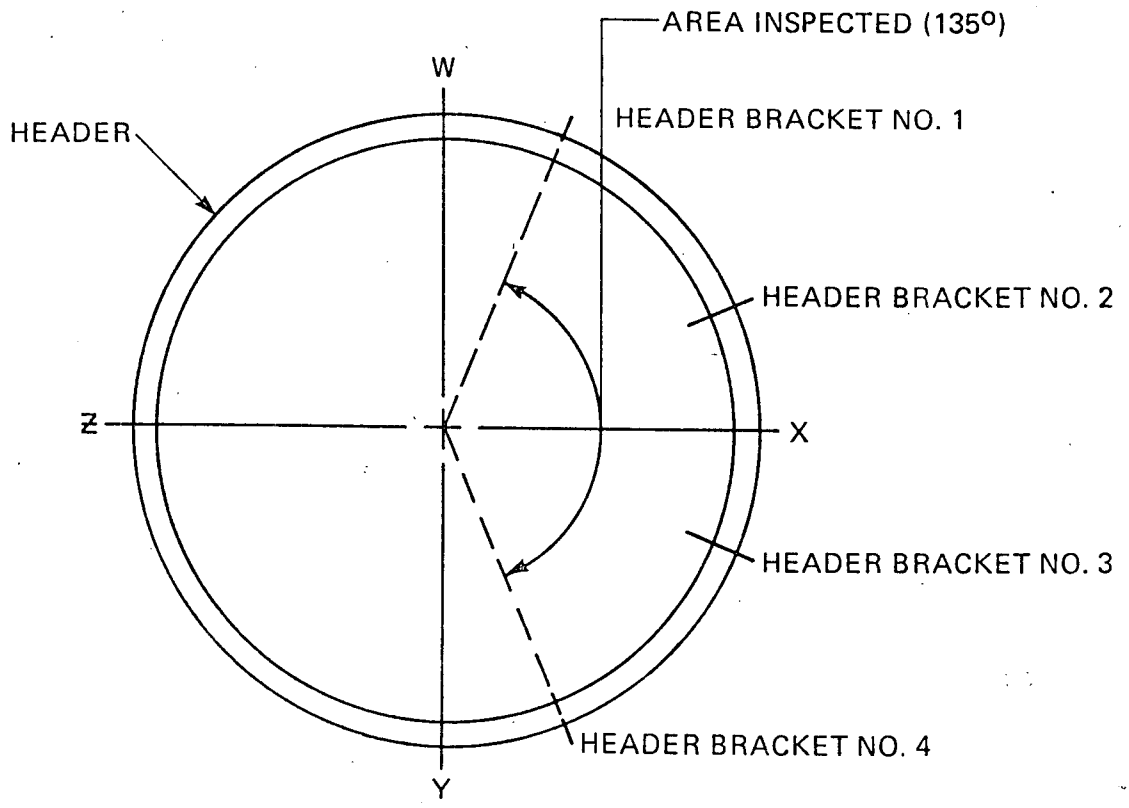

Note: Brackets 5 through 8 numbered clockwise from Y axis

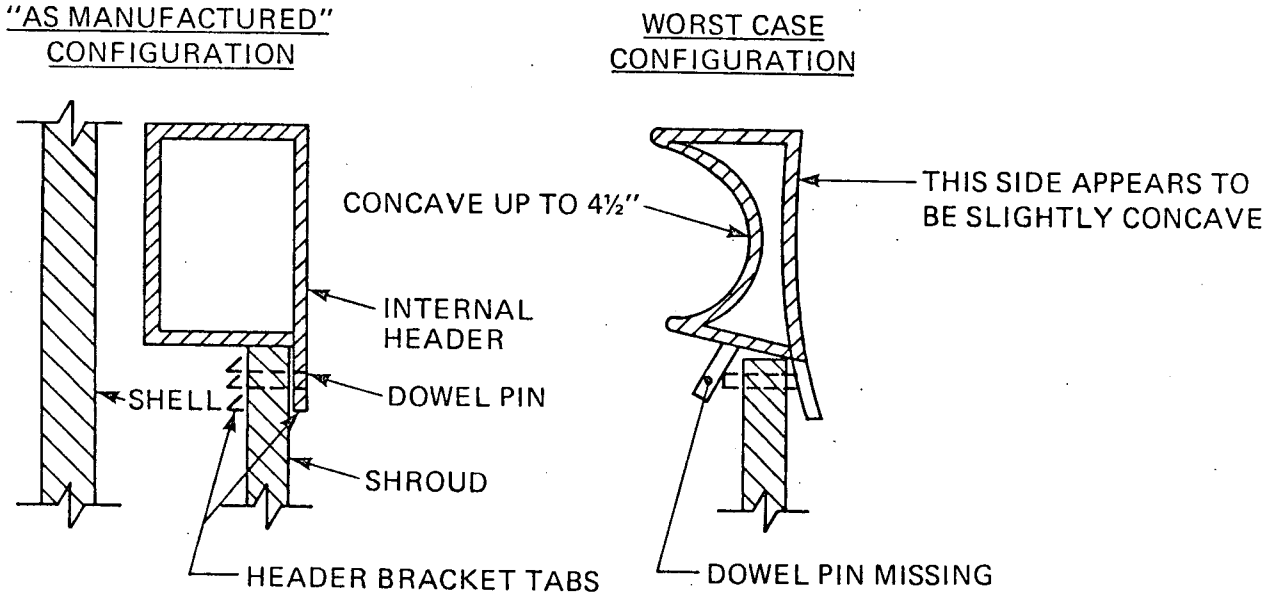

TYPICAL DAMAGE FOUND DURING INITIAL VISUAL INSPECTIONS

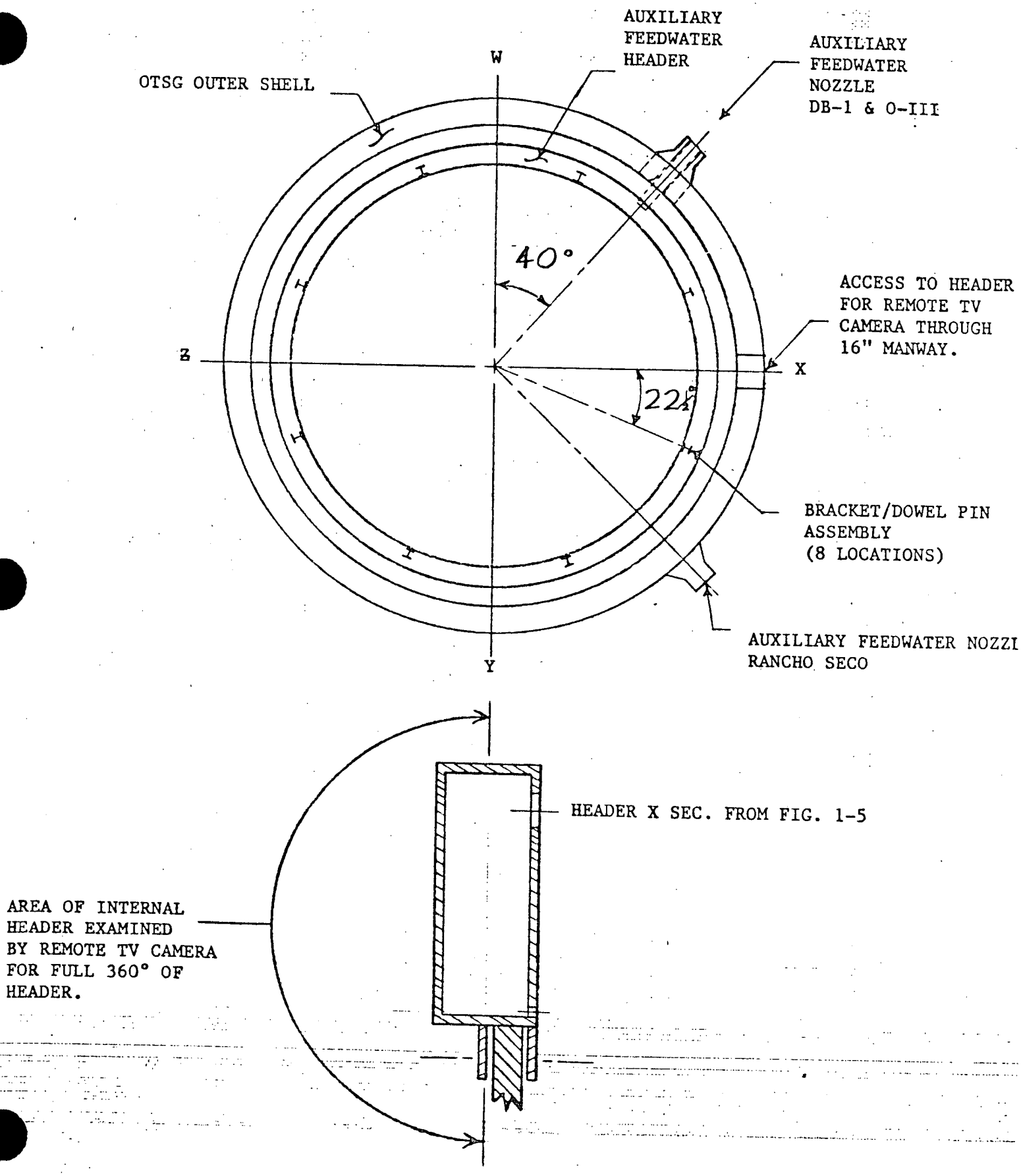
AUXILIARY FEEDWATER HEADER
AUXILIARY FEEDWATER NOZZLE DB-1 & O-III
W
OTSG OUTER SHELL
40°
ACCESS TO HEADER FOR REMOTE TV CAMERA THROUGH 16" MANWAY.
Z
X
22½°
BRACKET/DOWEL PIN ASSEMBLY (8 LOCATIONS)
AUXILIARY FEEDWATER NOZZI RANCHO SECO
Y
HEADER X SEC. FROM FIG. 1-5
AREA OF INTERNAL HEADER EXAMINED BY REMOTE TV CAMERA FOR FULL 360° OF HEADER.

FIGURE 2-2A

UT AND PT EXAMINATIONS OF
DB-1 OTSG 1-2 MANWAY AND AFW NOZZLE

FIGURE 1 OF ATTACHED

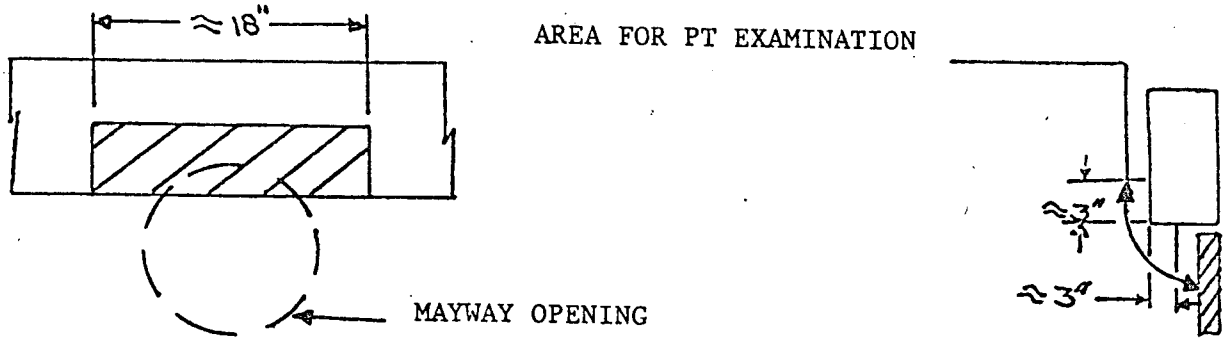

FIGURE 2 OF ATTACHED

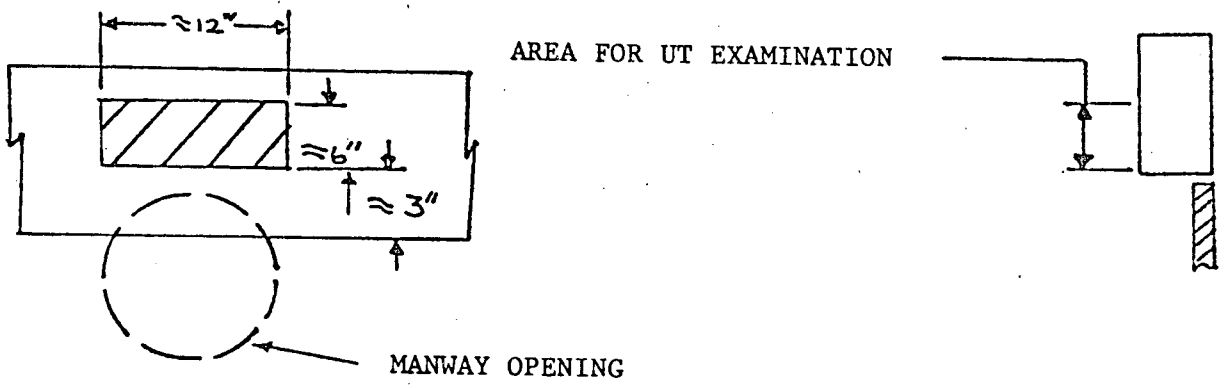

REDUCED FIGURE 2 OF ATTACHED

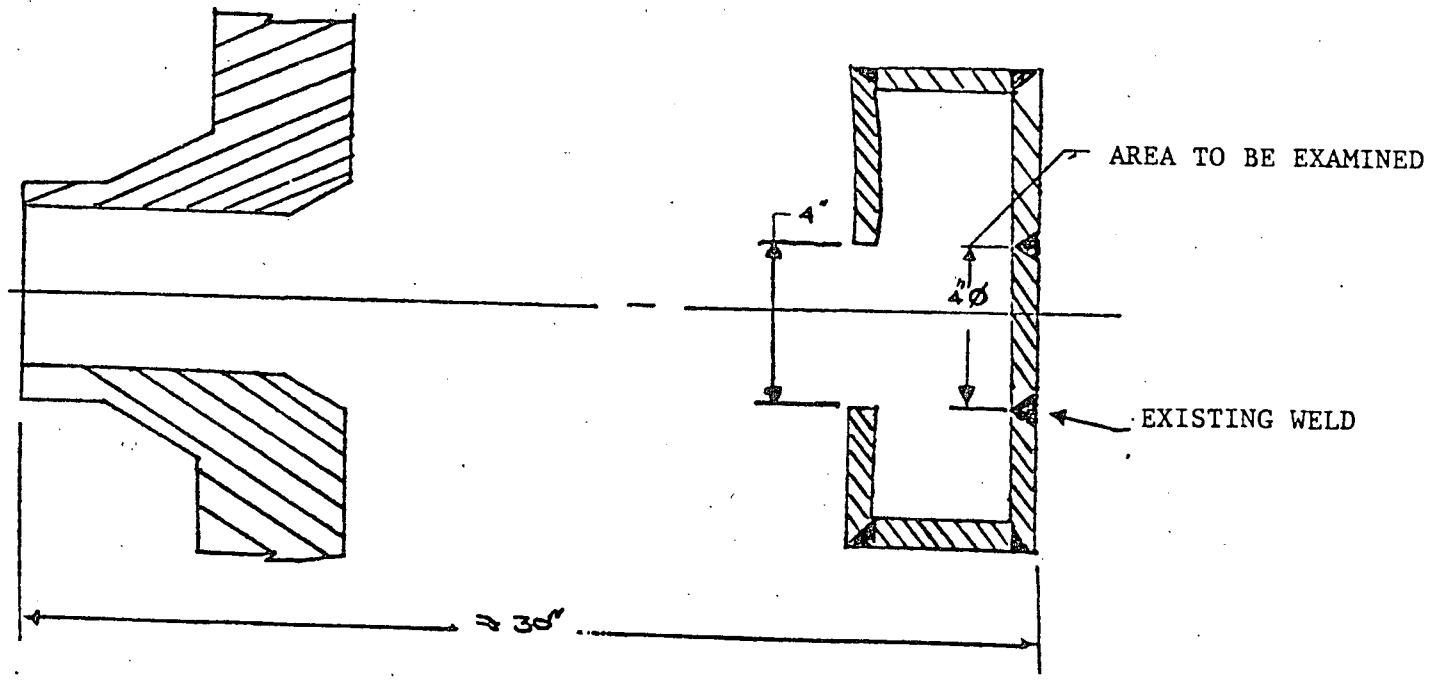

FIGURE 2-2B

INSPECTIONS PERFORMED AT
EACH AFW INJECTION HOLE LOCATION

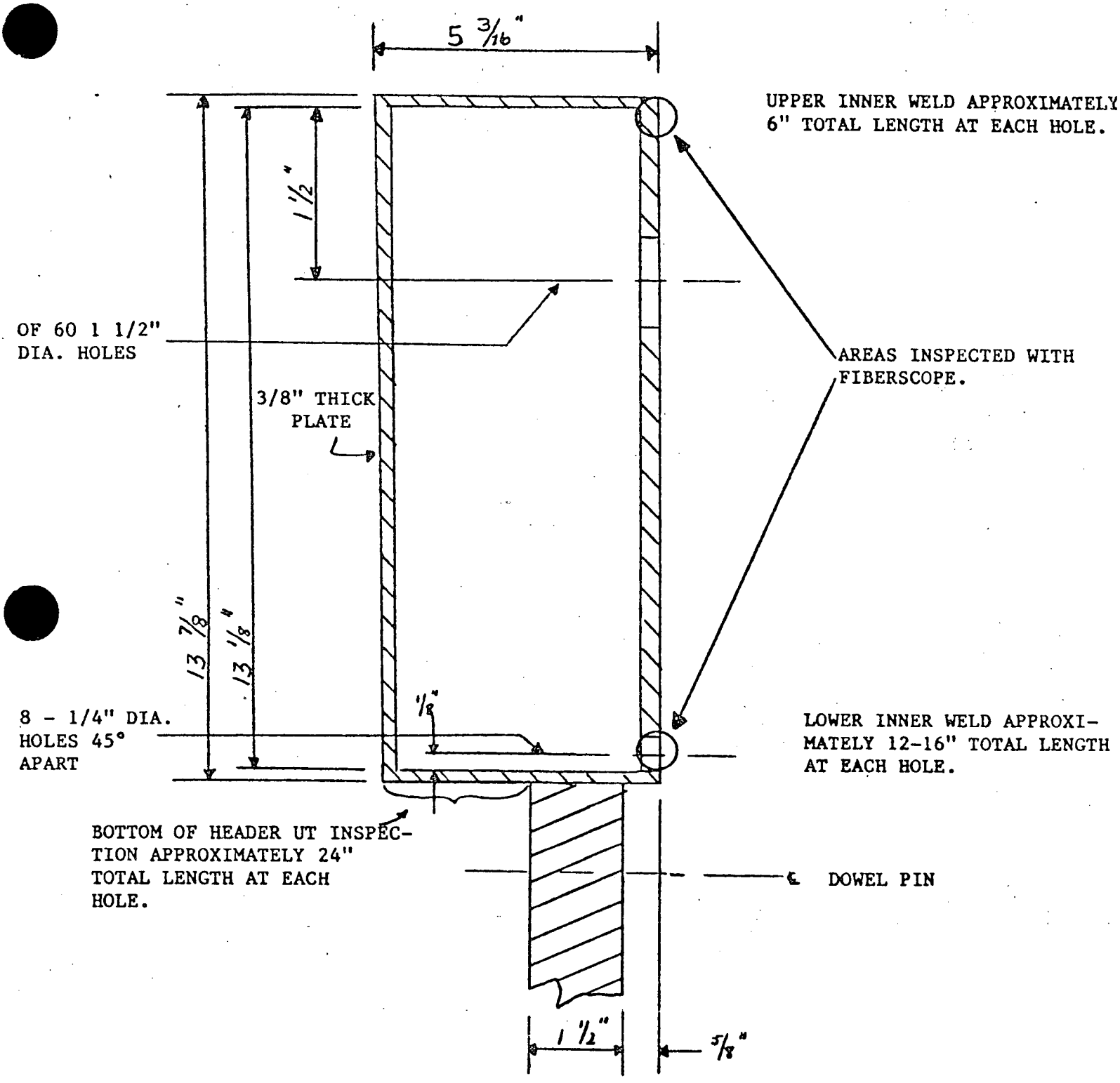

FIGURE 2-2C

Figure 2-3

INCORRECT SCALE - DRAWING IS ~ TWICE as LARGE AS ACTUAL HOLE

Artist's Drawing
Oconee 3 - "A" OTSG
Top Header Plate

Hole is ∿2 to 3 inches long by 1/8 to 1/4 inch wide. Hole is located ∿16 Tube rows from the Z axis lane towards the W axis.

ıre 2-4

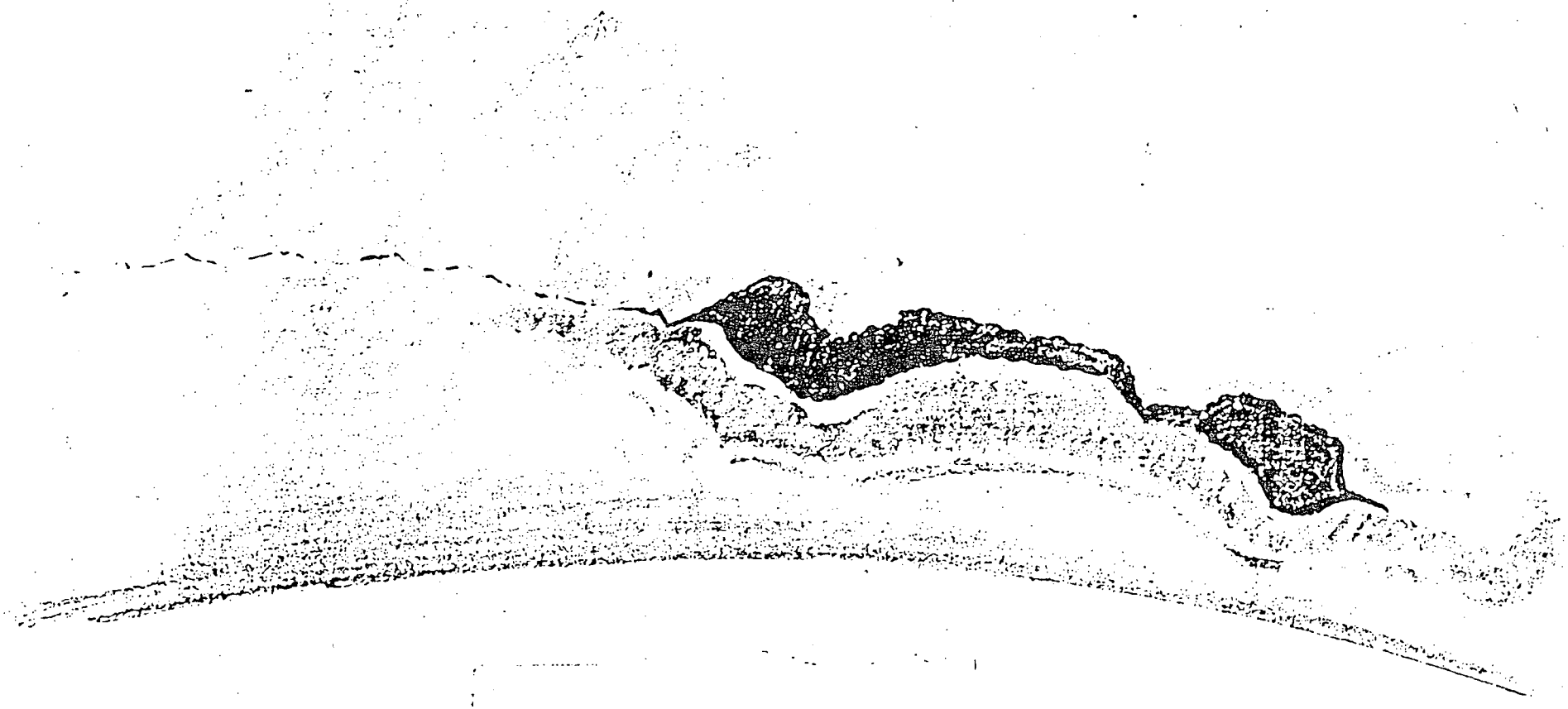

Artist's Drawing
Oconee 3 - "A" OTSG
Bottom Header Plate

Hole is ∿4 inches long by <½ inch in width. Hole is located between brackets 7 and 8.

Figure 2-5

Artist's Drawing
Oconee 3 - "B" OTSG
Top Header Plate

Hole diameter is ∿½ inch. Hole location is slightly towards the Y axis from the Z axis Tube Lane.

the steam generator bundle. The gap was estimated at approximately 1/4 inch. The bracket and the shroud hole were again slightly offset with no deformation of the holes. Again no pin was observed in the hole or in the shroud.

Bracket No. 5 - The bracket hole and shroud hole were misaligned and the bracket was bent out slightly. The dowel pin was missing.

Bracket No. 6 - The bracket hole and shroud hole were misaligned and the bracket was bent out. The dowel pin was missing.

Bracket No. 7 - The bracket hole and shroud hole were misaligned and the dowel pin was missing. There was a slight gap between the shroud and the header.

Bracket No. 8 - The bracket hole and shroud hole were misaligned and the dowel pin was missing.

The location where the auxiliary feedwater nozzle enters the header was observed using fiber optics. Some apparent wear was observed on the nozzle. The gap from the header to the collar on the nozzle appeared to be approximately one and one half inches. The headers was obviously deformed at the location where the nozzle entered the header; however, the nozzle was still in the hole in the header.

Visusal inspection of the top, outside wall, and bottom of the header reveal a hole in the top plate of the header near the Z axis (see Figure 2-5).

2.3.3 Weld Inspections

During the preparations to rotate the A header to allow the hole in the bottom plate to be cut out for analysis, a crack was discovered in the lower inner corner weld of the header. Fiberscope inspections located 180 degrees apart while the header was rotated 180 degrees allowed a 360 degree inspection of the lower-inner corner weld. Visual and UT inspections were made of the lower-outer corner weld. Visual inspections were made on the majority of the upper inner weld. The upper outer weld was inspected visually in a few areas; however, the difficulty in inspecting this weld resulted in less than full inspection. (Due to the other weld cracks, the very conservative approach of assuming all corner welds were fully cracked was taken in the stabilization analysis and thus saved the additional radiation exposure which would have been required for full inspection of all welds prior to repair.) Figure 2-6 shows the as-designed header with the corner construction welds. Figure 2-7 through 2-10 show the areas of weld degradation on the A header. Figure 2-11 shows photographs of two weld samples cut from the A header showing the lack of fusion, lack of full penetration, and lack of lower plate weld prep. While construction drawings required a "V" shaped weld prep at the interface of the vertical and horizontal walls, the analyses show that only the vertical walls were prepped which resulted in an inconsistent weld pattern with areas of lack of fusion and lack of full penetration when the fit up was less than ideal. Those areas of these welds were simply inadequate to withstand the loads generated when the header was deformed during AFW initiations.

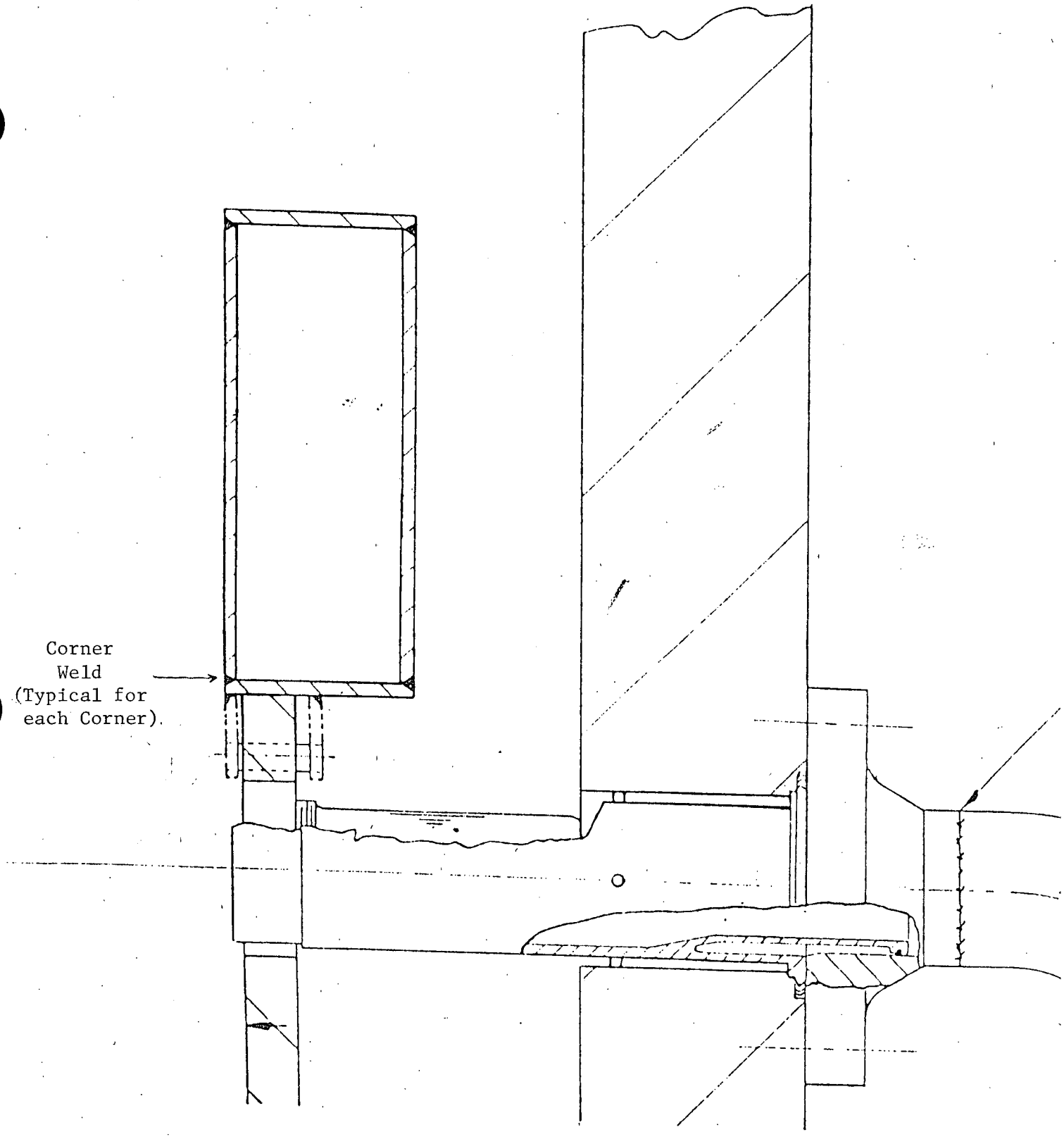

"AS DESIGNED" INTERNAL HEADER
WITH NEW EXTERNAL HEADER INSTALLED.

Figure 2-6

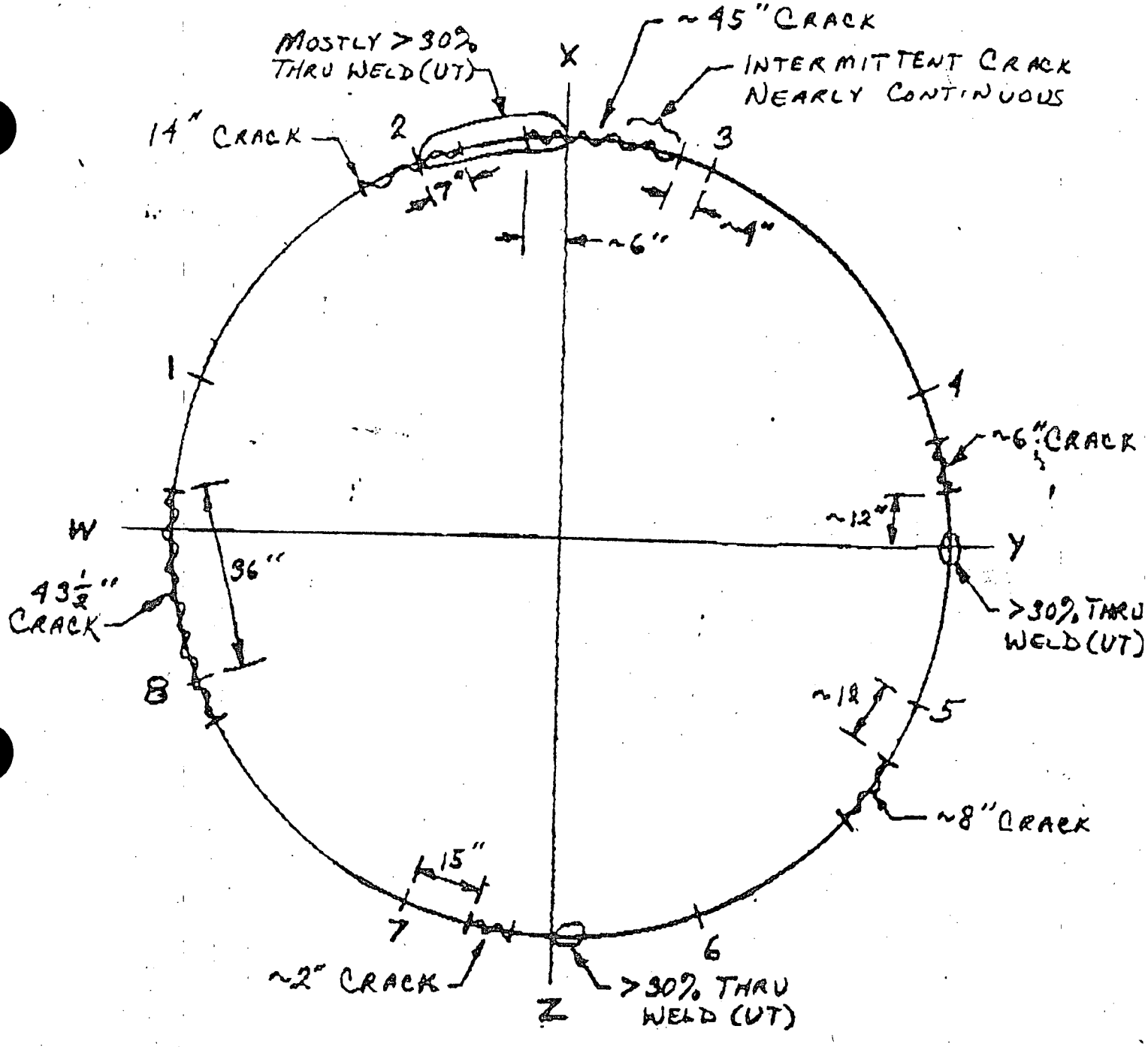

Figure 2-7
"A" AFW Header
Lower-Inner Corner Weld

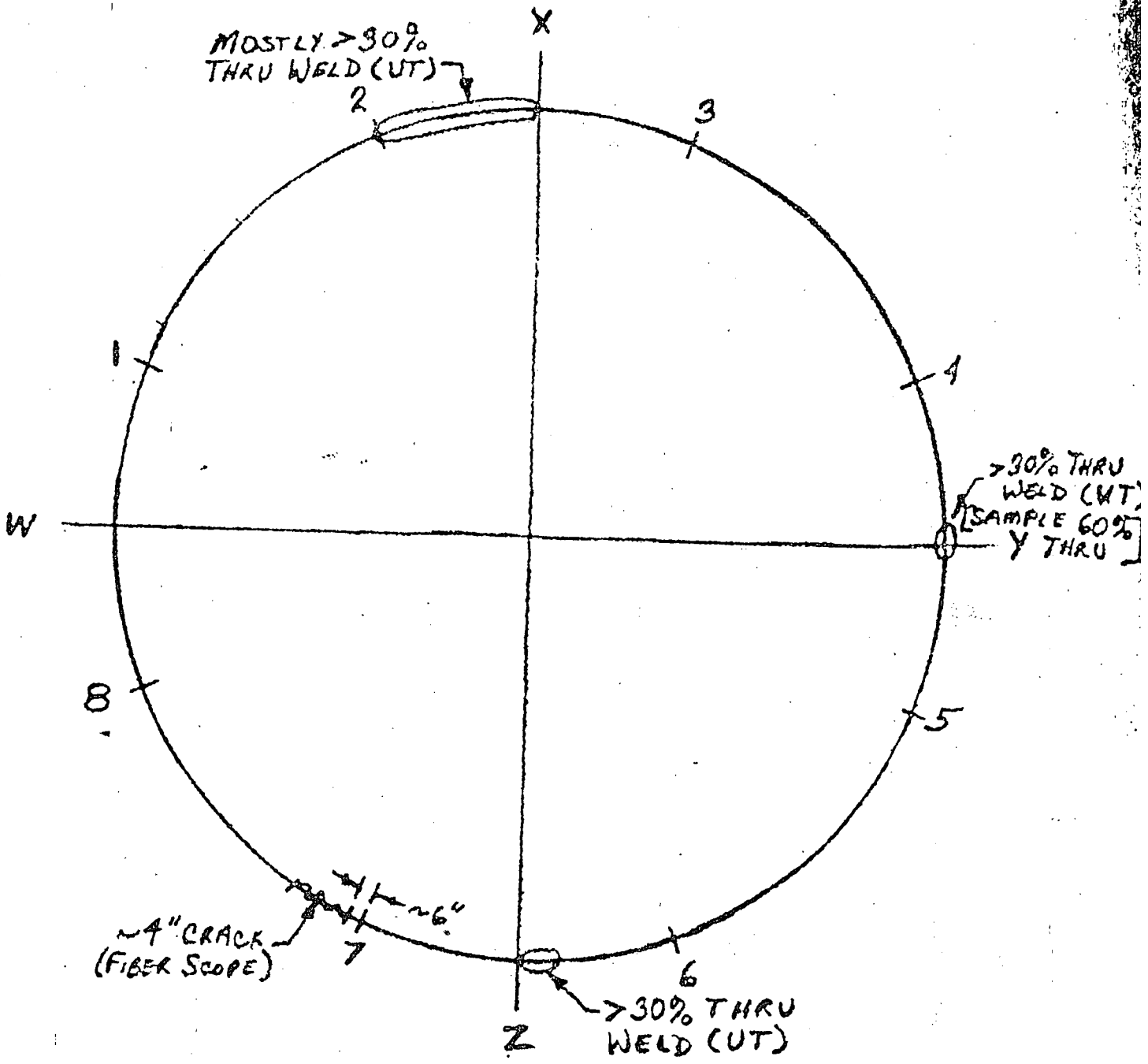

Figure 2-8
"A" AFW Header
Lower-Outer Corner Weld

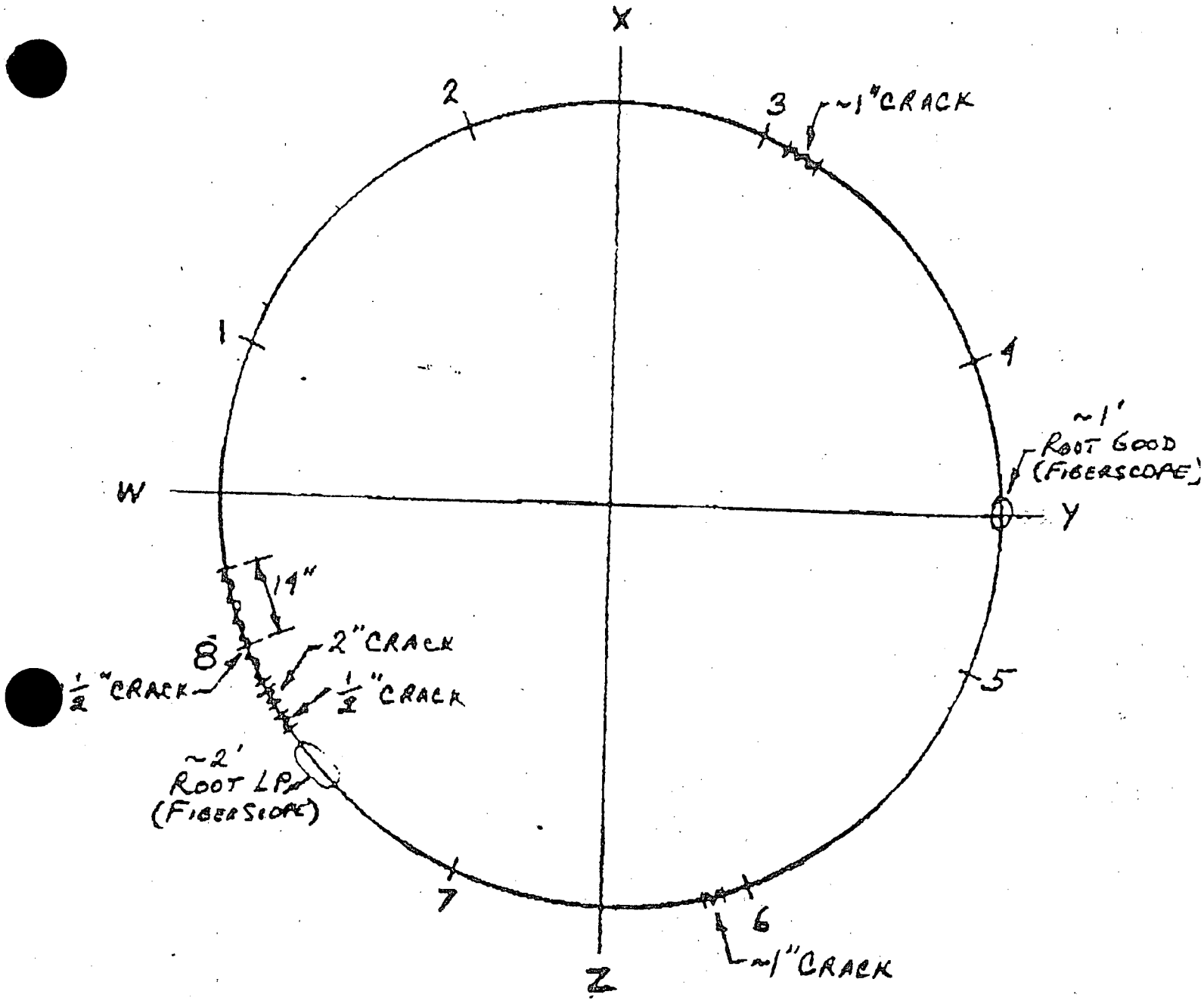

Figure 2-9
"A" AFW Header
Upper-Inner Corner Weld

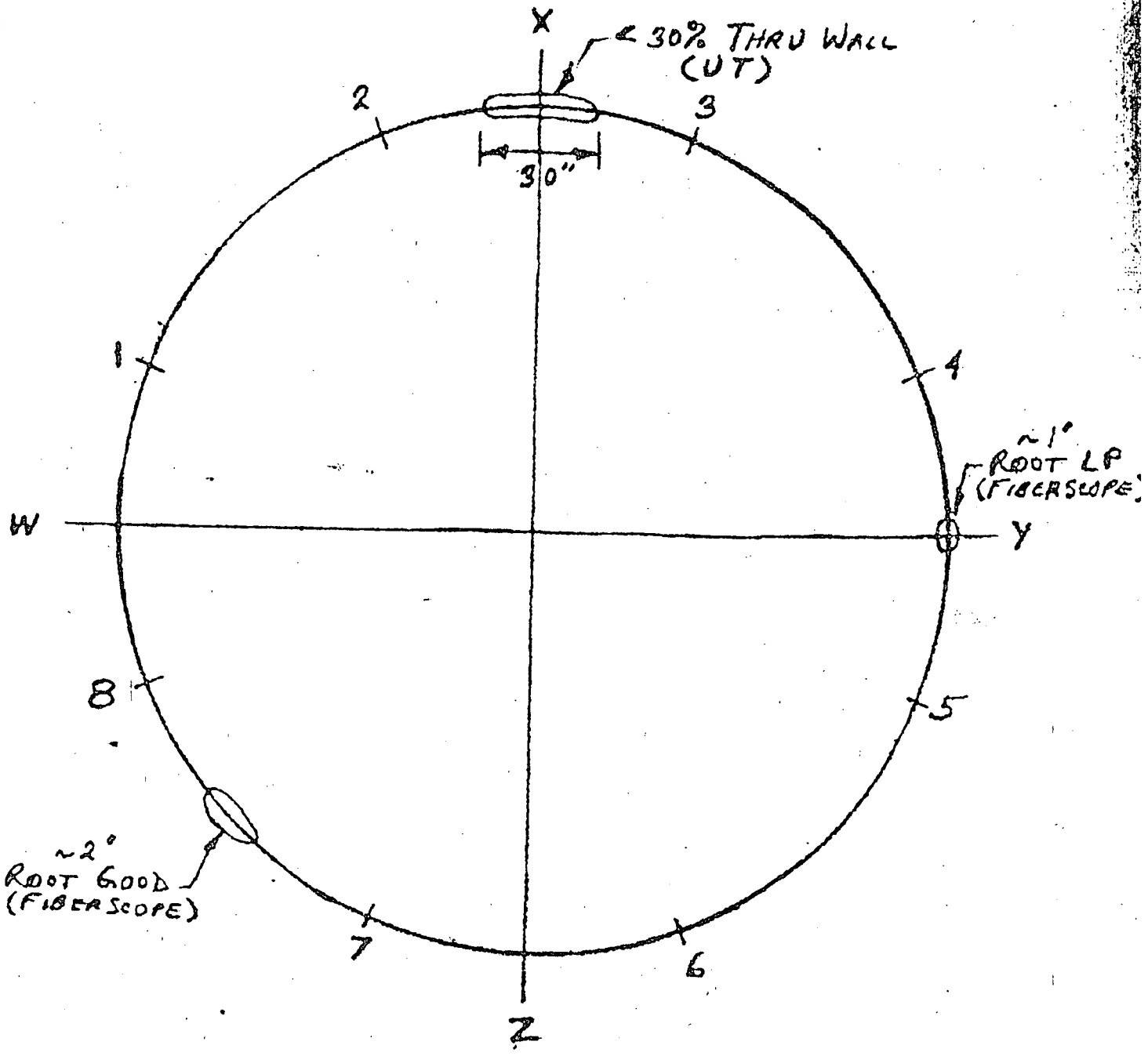

Figure 2-10
"A" AFW Header
Upper-Outer Corner Weld

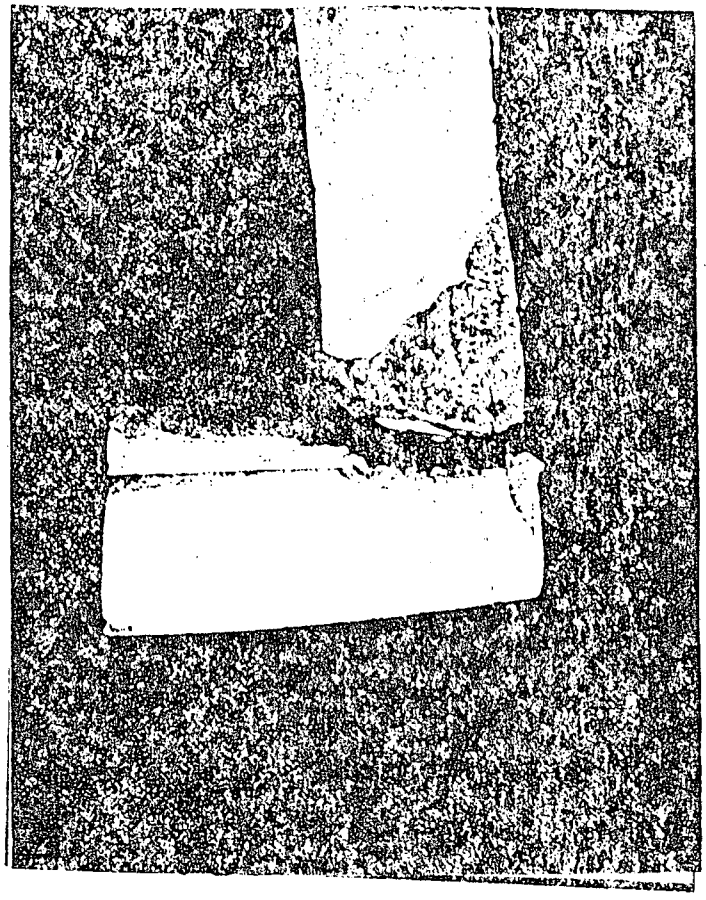

Sample 1

Section of weld from aux. feedwater header Oconee Unit 3 A generator

Approx. 2 1/2 X

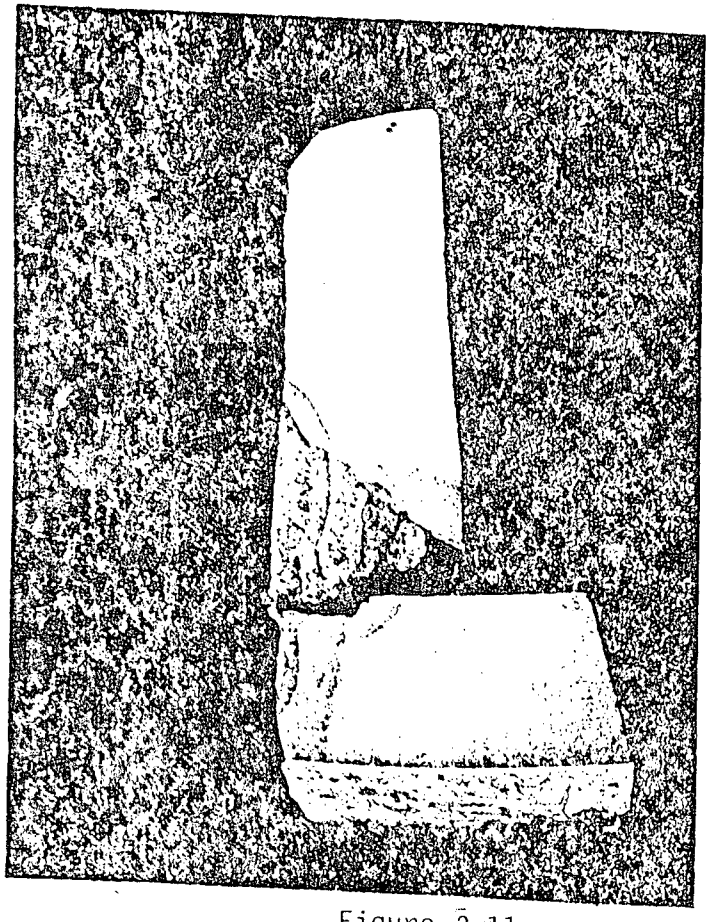

Sample 2

Section of weld from aux. feedwater header Oconee Unit 3 A generator

Approx. 2 1/2 X

Figure 2-11

The discovery of cracks in the A header occurred as the B header was being welded to the shroud. Thus, the header could not be rotated for a full inspection. However, the welds were inspected both visually and using UT through the manway and the six holes drilled in the steam generator. In addition, a fiberscope was inserted through the old auxiliary feedwater nozzle and the welds were inspected from the inside of the header for as far as the fiberscope could reach. The only cracks discovered were two cracks approximately two inches long and three inches apart at the upper inner weld at the number seven bracket location. In addition to the visual and UT inspections, a section of the lower outer weld was cut out for analysis. The analysis showed a weld of higher quality than A which was apparently strong enough to withstand the forces on the welds when the header deformed. The fact that all of the dowel pins were missing from B upon inspection suggests that the lower inner weld was strong enough to break the dowel pin free prior to the header weld cracking. (Seven of eight dowel pins were still present in the A header.)

2.3.4 Degraded Area Inspections

After the discovery of the holes in the header walls, additional inspections were conducted to determine the overall integrity of the headers and the cause of the holes. UT inspections were conducted on the bottom and outer vertical walls to see if any metal corrosion had taken place. The inspections showed equal to or greater than nominal 3/8 inch thickness in all areas except in the vicinity of the holes. Fiberscopic inspections of the inside of both headers showed that no general corrosion had taken place. The decision was made to rotate the A header so that the hole and crack in the bottom plate of the A header could be cut out for analysis.

The section that was removed was examined visually and then sent to B&W labs for detailed analysis. The analysis show that the hole was the result of a highly corrosive attack in a very localized area. The corrosion apparently started on the inside of the header and resulted in gradual wall thinning down to the holes. The areas of corrosion are clearly defined with the adjacent metal showing no evidence of corrosive attack. From the lab analysis it appears that the corrosion has been present for a long period of time. The corrosive agent was no longer present in the sample, but the analysis did show that no corrosive agent was present in the header material itself. Visual inspections of the other two holes in the A header showed identical features.

While the exact cause of these very localized, highly corrosive attacks is not known, it is very possible that a foreign corrosive agent was somehow introduced into the header during construction or prior to installation into the steam generators. If this was the case and the agent had been washed from the areas during normal operation over the years, then it is probable that the exact agent may never be accurately known. The analyses performed on the degraded areas were not able to positively determine that the corrosion process was not active. If active the likely times for corrosion would be when the unit was not operating and the steam generators were not in layup with a proper nitrogen blanket.

The inspections indicate that the A header was more severely attacked than the B header. To monitor the condition of the degraded areas during future inspection, the A header will be stabilized with the degraded areas located in

the vicinity of the X axis manway and the old auxiliary feedwater nozzle. Provisions are being made (such as cutting inspection holes in the outer header wall and inner circumferential bulkhead) to allow future detailed inspections of the degraded areas of the header.

The large hole and crack with the highly corroded area in the bottom of the A header has been cut out and replaced with good metal. The area of the smaller hole in the top plate and the very small hole on the inner vertical wall could not be cut out due to the difficulty in reaching these locations and the close proximity of the steam generator tubes. The corroded areas are being ground or brushed to remove as much scale as possible and to allow better determination during future inspections of the presence of any new corrosion.

3.0 Most Logical Cause

3.1 Mechanisms Examined

A number of mechanisms were evaluated as possible causes of the internal header deformations. Both stress and thermal hydraulic calculations were performed to analyze these mechanisms. Early in the evaluation, phenomena from normal operating conditions were ruled out as candidate mechanisms.

Mechanisms examined were:

- Impingement velocity and turbulent flow conditions due to high AFW flows
- High pressure drop due to high steam flow through header holes at the beginning of AFW flow
- Thermal stresses due to cold AFW flow into a header preheated by steam to about 550-590°F

It was concluded from these evaluations that some other deformation mechanism must be present to cause partial collapse of the internal AFW header. Stress calculations indicated that a pressure differential above about 200 psi would be required for this to occur.

3.2 Most Logical Cause

Condensation-induced high differential pressure has been postulated to be the deformation mechanism which could create large enough pressure differentials to partially collapse the internal AFW header. Vertical walls have less rigidity and tend to buckle inward. This inward distortion could bow the lower plate upward binding the bracket and dowel pins. This could defeat the dowel pin slip mechanism and ratcheting of the brackets and pins could occur. Forces may be sufficient to break bracket ligaments, bend pins, break bracket or dowel pin welds and deform inner brackets. Repeated application of such forces could increase the severity of the damage.

According to the Creare Report, NUREG 0291 [1] condensation-induced high difference pressure can be anticipated under the following conditions:

1. Trapped Steam

2. Sufficient flow of subcooled water

3. Sufficient subcooling

   Resulting in:
   - Rapid condensation of steam
   - Sudden depressurization of steam void

NUREG 0291 describes condensation-induced pressure surge phenomena which can occur in a flowing system. These phenomena can be separated into three distinct stages. Stage #1 is the process of void formation, assumed to occur mainly by fluid mechanical interaction, possibly aided by countercurrent steam flow. Stage #2 is the condensation and heat transfer driven void collapse, resulting in potentially very large localized pressure decreases in the header. Stage #3 is the water slug impact with the upstream water, creating the large amplitude shock waves.

The AFW header internal damage mainly shows evidence of an inward collapse of the outer (shellside) wall. The "ballooning" effects which are typical of feedwater line water hammer (Stage 3) were not evident.

The observed damage to the AFW headers points to a conclusion that the most logical deformation mechanism is condensation-induced high differential pressure. The first phase of the pressure transient appeared to create a condensation induced high pressure difference across the AFW header wall when trapped steam pockets collapsed, resulting in header deformation. The effects of a resulting shock wave were not evident due to the attentuation by both the wall deformation and by the flow holes in the header which provided a fluid "escape route".

4.0 Description of Repair

The repair of the units involved meeting three objectives in an optimum combined manner:

- Retain all AFW functional requirements
- Complete the inspections of the damaged header
- Perform the required repairs

The most logical choice from a functional standpoint was to use a configuration as similar as possible to that used on other operating OTSGs, i.e., the external AFW header. Because it was considered desirable to retain the internal header as an extension of the shroud to serve as a steam flow baffle, it was necessary to have sufficient access to inspect fully the damaged header. It was also necessary to locate the inspection holes so that they could serve both as repair access openings and subsequently as AFW injection points.

The following general considerations will be applied to the inspection and repair program:

- All work will be conducted to minimize radiation exposure of personnel.
- Secondary side lay-up conditions will be monitored and kept within established water chemistry limits.
- Machining techniques used and materials control exercised will be designed to maintain systems' and components' cleanliness, protect the steam generator tubes and prevent the creation of loose parts.

4.1 Internal Header Design Requirements (2)

The evaluation of these considerations led to the establishment of a set of design requirements for securing the internal header. These requirements met by the repair described in Section 4.2 include the following:

- The header must be maintained in a fixed position relative to the tube bundle. The minimum clearance between unplugged (functional) steam generator tubes and the header/restraint is 1/8". The minimum required clearance between the tubes and the stabilized header was determined by accounting for thermal motions and Flow Induced Vibration (FIV). The worst case relative motion, .026", occurs during heatup when the shroud is restricted by the shell. The header motion due to FIV is very small, less than .001" because the FIV loads are small and the header and shroud are relatively stiff. The maximum tube motion due to FIV is .015" for a lane tube. This total of .042" is less than one-half the established criteria of .125".

  It should be noted that although Figure 1-2 indicates a possible nominal clearance of 9/16" to 2" in the original header design, there was no minimum clearance criteria defined. No minimum dimension was specified.

- The secured header must serve as an extension of the shroud to channel steam flow through a similar flow area as it did in the original design.

- Based on analysis performed, the AFW inlet opening in the internal header will not be closed.

- The secured header must withstand the expected static and dynamic loads resulting from:

  1) normal and upset operating transients

  2) seismic conditions (OBE)

  3) flow-induced vibration

- Restrained header must not cause leakage of steam generator tubes when subjected to faulted conditions from the most severe accident (steam line break) and seismic (SSE) conditions.

- The header restraint design must meet ASME, Section III Class 1 allowables.

- The design must minimize the risk of creating loose parts in the steam generator. Any existing brackets and pins which could potentially become loose parts shall either be removed or fastened in such a manner to prevent them from becoming loose during operation.

- The design must be compatible with the carbon steel materials of the header, upper cylindrical baffle, and steam generator shell, and it must be compatible with the feedwater chemistry requirements.

- The process of securing the header must be accomplished via the existing secondary manway and/or the auxiliary feedwater nozzle openings, old and new.

- The process of securing the header must not damage the tubes, create loose parts inside the steam generator, or introduce contaminants which cannot be removed from the steam generator.

- The process of securing the header may use but should not necessarily be limited to existing brackets and dowel dins at locations that are verified by inspection to be sound. Appropriate capture of the dowel pins and brackets must be achieved.

- The design must be licensable without violating any of the plant's design bases.

- A volumetric examination of the lower plate in the areas of attachment of the header is required.

4.2 Internal Header Repair

4.2.1 Header to Shroud Stabilization

The bottom of the internal header will be secured to the shroud in eight locations around the circumference. These will be oriented above and adjacent to the circumferential locations of the shell to shroud alignment pins. At each location a seven (7) inch long continuous fillet weld will be used to attach the outside of the shroud to the bottom of the header. In areas where there is significant separation between the shroud and the header, a shim will be used and will become part of the fillet weld. At each of the fillet weld locations a 1/2 inch thick by 5 inch long by 3 inch wide gusset plate will be fillet welded to the bottom of the header and the outer face of the shroud. Figure 4-1A illustrates the header to shroud stabilization. The existing brackets and remaining dowel pins were removed prior to stabilizing the header. The stabilization welds will be inspected visually using a fiberscope of sufficient magnification to detect surface defects (root pass and final inspection).

The thermal sleeves which were used to direct AFW to the internal headers have been removed. A flange will be welded to the existing nozzle and a blind flange will be used to seal the opening.

As mentioned at the beginning of this section a major consideration in the repair approach was to provide access to the damaged internal header with a

minimum of machining on the shell. An engineering evaluation indicated that 5 inch diameter holes would provide sufficient access for securing the header while still complying with the code requirements for the mechanical strength of the steam generator shell. A demonstration of the ability to secure an internal header to the shroud by the described method was performed on a full scale steam generator mock-up May 21, 1982.

It is important to note that the probable cause of deformation to the internal header, identified in Section 3.2, describes a condition that only exists when that header is used for auxiliary feedwater additions. It is, therefore, considered reasonable to leave the internal header in place, once it is properly secured, since it will no longer be exposed to conditions which produced the deformation.

4.2.2 Analysis of Header to Shroud Stabilization

Analyses were performed to ensure the adequacy of the internal header attachment design. The stabilized header will be subjected to loads which cannot be simulated using axisymetric models. To provide adequate accuracy, the header, eight attachment points and an attenuation length of the shroud were modeled as a three dimensional structure using the ANSYS Finite Element Code. The header was modeled using quadrilateral plate elements to represent the four sides of the header. The circumference of the header was divided into 54 elements with nodes separated by an average of 6.7°. The shroud was also modeled using quadrilateral plate elements and included one dimensional elements at eight node points around the circumference to simulate the alignment pins and their interaction with the steam generator shell. The two structures are connected at eight locations by the use of tie-nodes to represent the welded attachments. In order to avoid excessive computer time the shroud was treated as a super element and thus specific results are not available for it. Figure 4-1B shows the full 360° model which was used.

The model was created primarily to determine the loads imposed on the re-designed connections between the header and shroud. Because of the geometry of the welded attachment, shown in Figure 4-1C, the calculation of the stress intensities from the load and moment vectors required the following assumptions as to the way the welded attachments would carry the load:

1. <u>Radial Horizontal Load</u>

   Because the gusset is relatively flexible in this direction compared to the fillet weld it was conservatively assumed that only the fillet weld would carry this load in shear.

2. <u>Circumferential Horizontal Load</u>

   Both the gusset and fillet welds share this load in shear.

3. <u>Vertical Load</u>

   Both the gusset and fillet welds share this load.

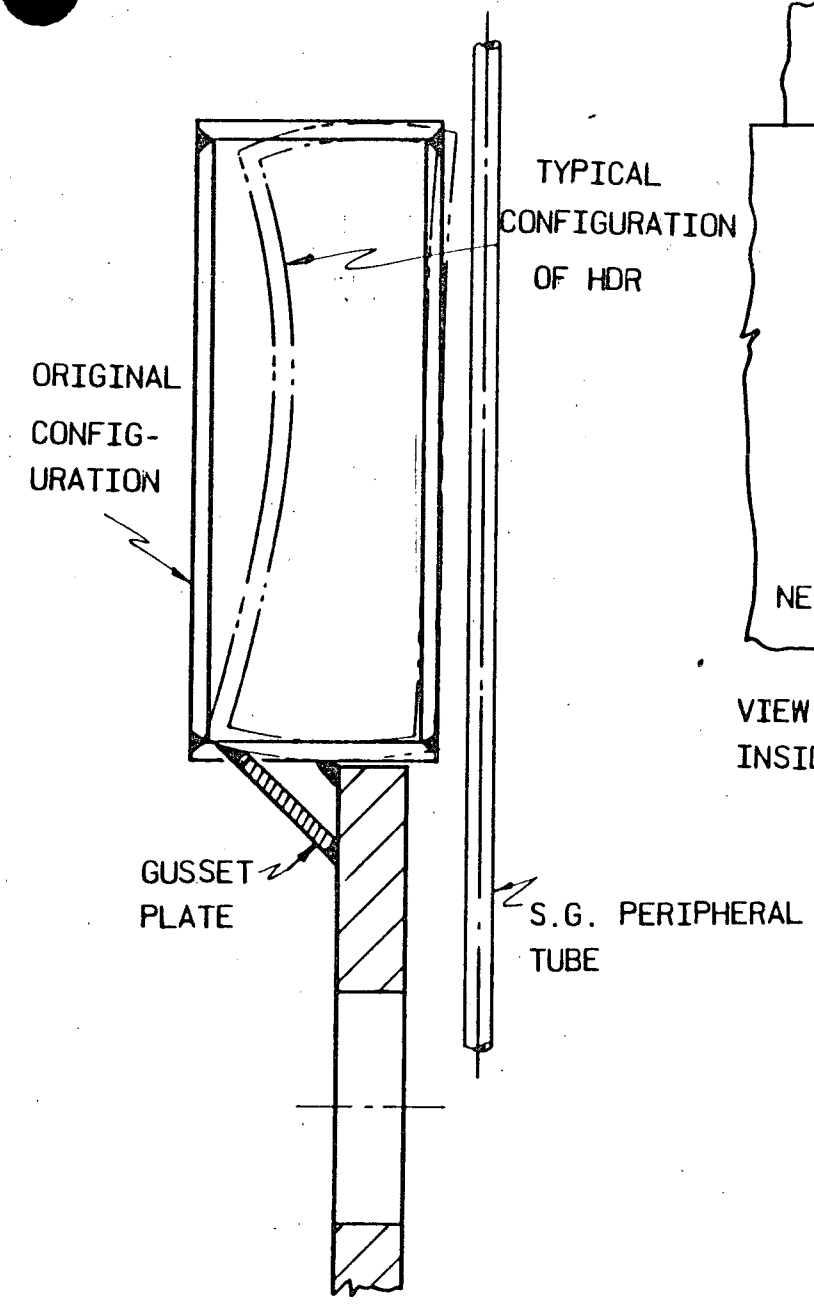

CROSS SECTION OF INTERNAL HEADER

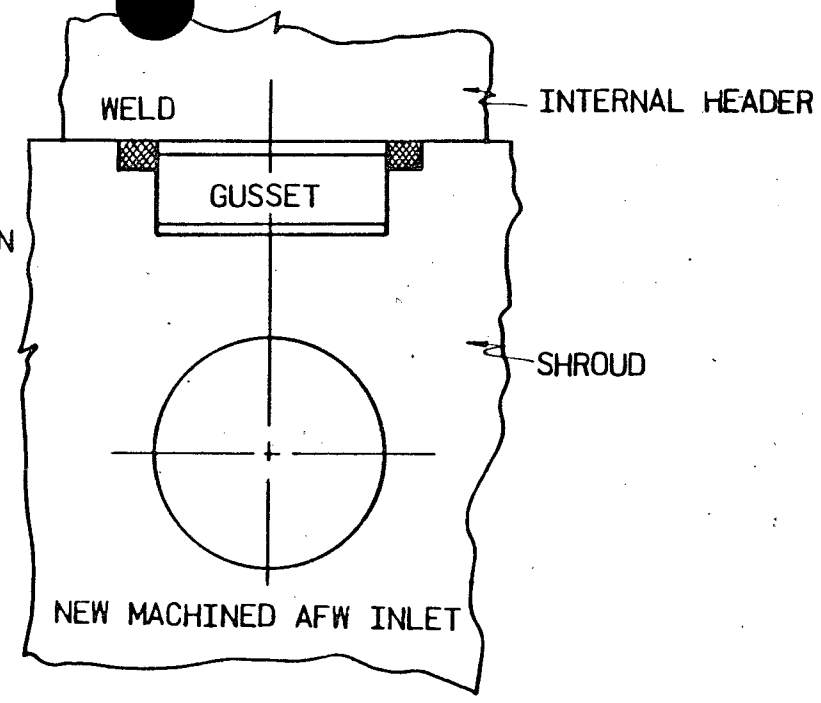

VIEW OF WELD AND GUSSET FROM
INSIDE OF SHELL-TYPICAL OF 8

Figure 4-1A
SECURING INTERNAL AFW HEADER

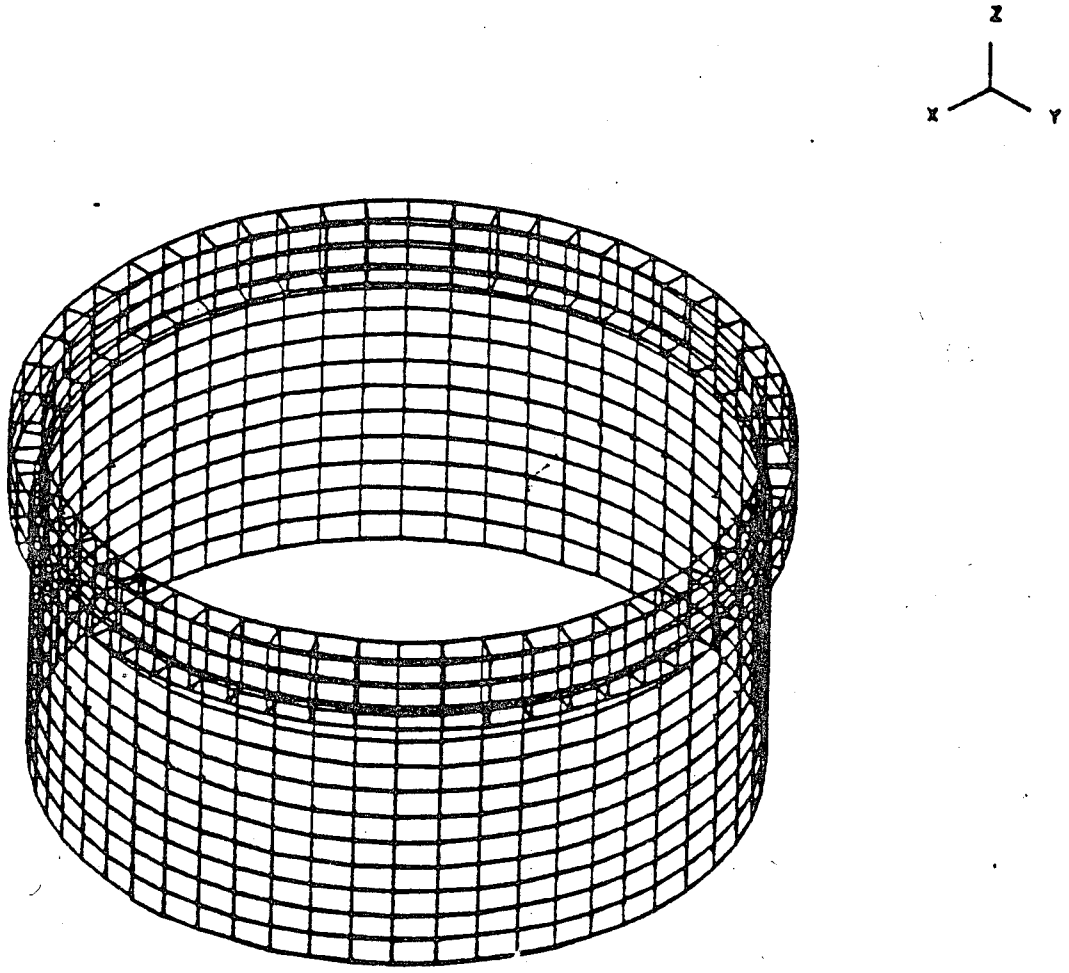

Figure 4-1B COMPLETE 360° F.E. MODEL

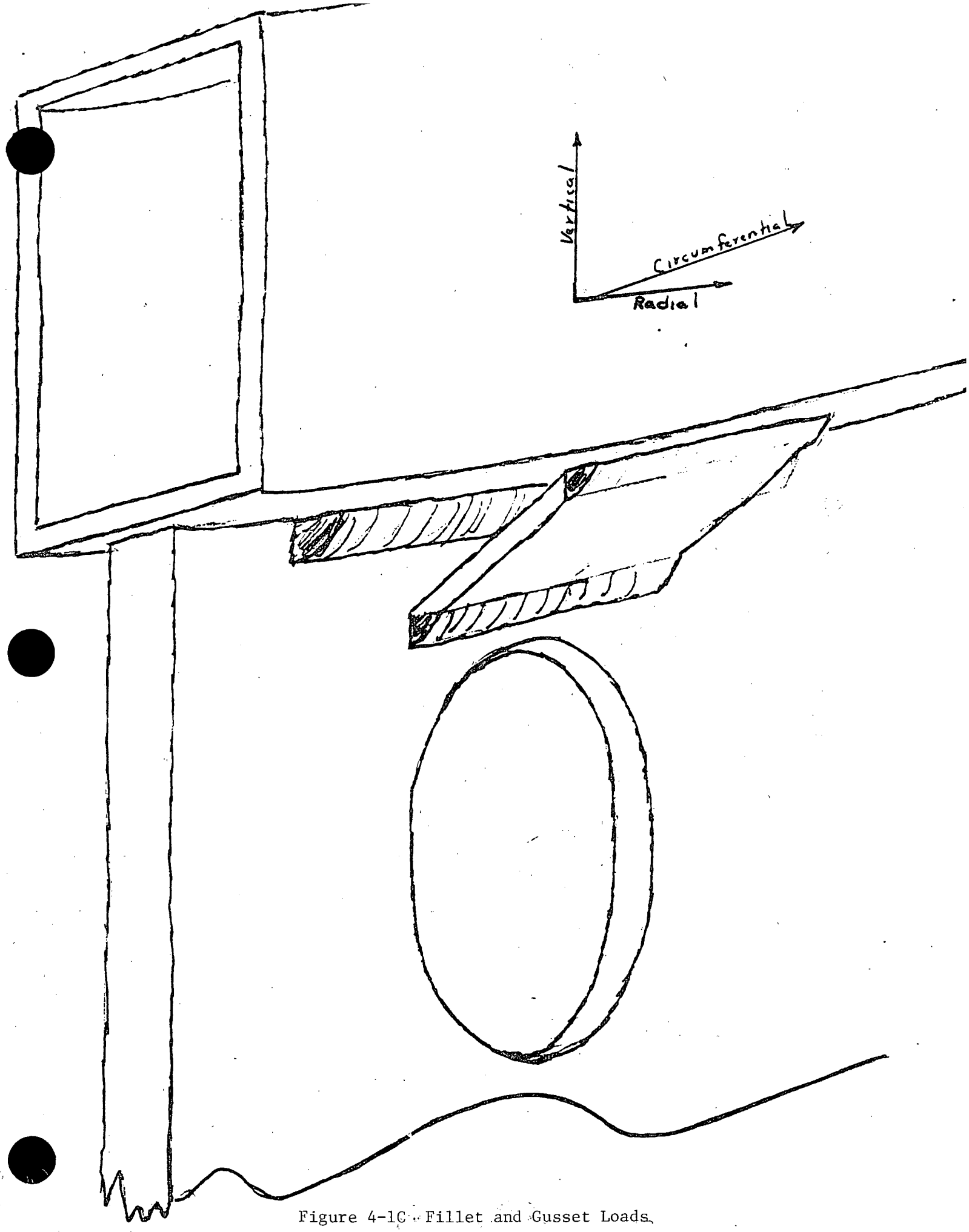

Figure 4-1C - Fillet and Gusset Loads

4. Moment about Radial Axis

Both the gusset and fillet welds share this moment with the centroid being at the center of the welds.

5. Moment about Circumferential Axis

The gusset and fillet take this moment as a vertical couple. The centroid is between the two welds.

6. Moment about Vertical Axis

The gusset and fillet weld share this moment with the centroid being between the welds at the center of the welds.

7. All stresses were converted to stress intensities.

The weld area of the fillet weld is taken to be the theoretical throat times the length. The weld area of the gusset welds is taken to be the thickness times the length. For both welds a weld quality factor of 0.5 is used as is recommended for a fillet weld in Section III Subsection NB paragraph 3356 of the ASME Code 1977 Edition, Summer of 1978 Addenda.

The analysis of the welds in the header itself used a weld quality factor of 1 since these were designed as full penetration welds. The model is constructed such that the full stiffness of these corner welds is used. In considering the stresses in the corner welds the use of the full stiffness is conservative since it maximizes the predicted loads on the weld.

The analyses were performed to ensure that the structural integrity of the stabilized internal headers will be maintained for the remaining life of the plant. The results of the analyses are described relative to the ASME Service Levels A, B, C, and D. For Levels A and B the analysis was performed for the combined Loads of Deadweight, Flow Induced Vibration, Operating Basis Earthquake and thermal transients. Flow induced vibration due to random excitation was calculated and found not to exceed peak loads of 2880 lbs. horizontal and 77.4 lbs vertical once in 40 years. Flutter and Vortex Shedding were considered and found to be negligible. The steady state drag load created a net downward force of less than 1,700 lbs. and a horizontal radial load of less than 60 lbs. The operating base earthquake for Rancho Seco, the plant with highest seismic loads, resulted in acceleration levels of 1.3g's horizontal and .2g's vertical*. All of these loads result in low stresses in the header although they were added into the load combinations. The conditions which do produce significant stresses are two transient conditions, secondary side heatup and initiation of auxiliary feedwater. Both of these are thermal transients which create secondary stresses in the shroud and header. All of the other transients considered did not result in a sufficient change in temperature in the generator to produce significant stresses. In a like manner the stresses in the attachment welds might be considered secondary; however, to be conservative the stresses in these welds were treated as primary stresses.

*These are the accelerations for the internal header due to steam generator motions calculated using lumped mass dynamic models.

The first condition, heatup, causes stress because of the interaction of the shroud alignment pins with the shell. During heatup the shroud and header follows the steam temperature more closely than the shell resulting in a maximum Δt of 70°F. The shroud attempts to expand radially but is prevented by the alignment pins which contact the shell. The shroud deflects into an eight lobed shape. The header which is also at the steam temperature tends to remain round. The analysis was performed by imposing the calculated radial displacement caused by 70°F Δt, .026 inches, inward on the shroud at the eight alignment pin locations. The maximum stress resulting in the most highly stressed bracket from this load combination was 9,600 psi compared to an allowable of 10,000 psi. The allowable stress intensity is S_m (Level A & B primary allowable) times a 0.5 weld quality factor or .5 S_m.

The second transient condition, initiation of auxiliary feedwater, causes stress by cooling the shroud by splashback from the nozzle discharge. The splashback causes local cooling of the shroud at the 6 nozzle locations. The header is not cooled and tends to remain round thereby imposing loads on the attachments. The maximum stress intensity resulting from the load combination including this transient is 6,920 psi compared to 7,900 psi allowable. The allowable is lower than the heatup case because of the higher temperature.

A fatigue analysis of the Level A & B conditions shows that the header attachment welds are adequate for 360 heatup transients 29,000 initiation of a AFW transients and the full compliment of all other transient listed for the plant. A fatigue srtress concentration factor of 4 was used in the analysis.

The Level C analysis was performed considering Dead Weight, Flow Induced Vibration, Thermal Transients and Safe Shutdown Earthquake. All conditions for Level C are the same as analyzed for Levels A & B with the exception of the Safe Shutdown Earthquake which has acceleration levels twice that of the Operating Basis Earthquake. The additional stress due to SSE is small resulting in the Level A&B margins being limiting.

For the Level D analysis two load combinations were considered: (1) Dead Weight, LOCA, and Safe Shutdown Earthquake; (2) Dead Weight, Main Steam Line Break (MSLB) and Safe Shutdown Earthquake. The limiting case is the combination including Main Steam Line Break because of the lateral load resulting from the unsymetric steam flow caused by the break. The lateral load was obtained from an analysis performed on a model representing a steam generator with a tall shroud rather than the combination of shroud and header. The side load taken from that analysis was a distributed pressure loading which when integrated over the header area yielded a load of 23,500 lbs. The header, because it reduces the steam annulus has a higher pressue drop than the tall shroud. A study was performed to access the affect this would have on the MSLB load. It was determined that a factor of 10 would conservatively bound the effect of the different geometry. This yielded a load of 235,000 lbs. The application of this load plus deadweight and SSE yielded a stress intensity of 20,500 in the most highly stressed attachment weld. This compares to an allowable of 21,000 psi which is equal to .35 Su or 0.7 Su times a 0.5 weld quality factor.

The load combination including LOCA is not limiting because the LOCA accelerations of 13.75g's horizontal and 8.25 vertical do not produce significant stresses due to the relatively low mass of the header. The stress in the most

highly stressed attachment weld is 2,100 psi compared to 20,000 psi allowable.

In summary, the header attachment welds are adequate for all anticipated loads. The requirement for these attachments is to hold the header in place atop the shroud and for Level A, B or C Conditions to prevent contact between the header and tubes. The attachments provide sufficient rigidity to satisfy this requirement. For Level D, the requirement is no tube rupture. The attachments by preventing the header from breaking loose avoid any potential for the header to cause tube rupture.

4.2.3 Header Weld Analysis (B OTSG)

The same set of analyses was performed on the welds at the corners of the header. Because these were designed as full penetration welds the analysis was performed using a weld quality factor of one. For Level A, B or C the significant stresses are primary plus secondary stresses where the peak stress intensity in any weld is 11,480 psi compared to an allowable of 47,400 psi which is equal to $3S_m$. This yields a safety factor of 4.1.

For the Level D loads the combination including Main Steam Line Break is most limiting. The most highly stressed of any of the welds has a stress intensity of 17,200 compared to an allowable of 37,920 psi which yields a safety factor of 2.2.

The fatigue analysis for the welds was performed using a stress concentration factor of 4 which is appropriate if cracks are present. (A stress concentration factor of 1.0 would normally be used.) This analysis yielded a fatigue usage factor of .86 for 360 heatup cycles and 29,000 AFW initiation cycles.

These analysis can be used to show that substantial margin exists to encompass the existence cracks in the weld. To meet the code limits for faulted condition only 45.4% of the weld would be required even if all of the weld were stressed at this peak value. For this to be true any cracks would have to be interspersed around the circumference. A reasonably conservative inference would be that 25% of any weld could be fully degraded or cracked if the condition was intermittently distributed.

The stress averaged around the circumference for the corner welds due to the main steam line break is much less than the peak values given. An analysis has been performed using the Main Steam Line Break Load assuming a 28 inch crack to exist in a inner corner weld to determine its effect on the header stress pattern. The result of the analysis was that the crack does cause a slight increase in local stresses in the corner welds but has no significant impact on the stresses elsewhere in the header. This leads us to conclude that the existence of some cracks does not invalidate the analysis reported here and supports the above conclusions. The condition of the B header, with the two small (approximately 2 inch long cracks) cracks, falls well within the above assumptions.

4.2.4 Header Stabilization Analysis (A OTSG)

Because of corner weld cracks found during inspection of the Internal header in the A Steam Generator at Oconee III, the header was determined to be in a more severely degraded state than the internal header in the B steam generator

and the decision was made to take no credit for any corner weld in the A header stabilization. Thus the four header walls had to be "attached" to each other prior to stabilizing the header to the shroud. To accomplish this, an "L" section was cut out, a pail of bulkheads (ribs) were welded on each side to the four walls and the trimmed "L" section was rewelded in place, as shown in Figure 4-1E. This repair was done at fifteen locations around the header. Analyses were performed to determine the adequacy of the reinforced header and the welded attachments between the header and the shroud. The loads were combined according to ASME Code Criteria and the resulting stresses compared with allowable values also in accordance with the ASME Code. The conclusion is that the reinforced header is adequate for all anticipated loads and that the header structure, as reinforced, has sufficient margin such that none of the corner welds of the header are required.

Method of Analysis

The stabilized and reinforced header is subjected to loads which cannot be simulated using axisymetric models. To provide the required accuracy the header, 30 reinforcement ribs, eight attachment points and an attenuation length of the shroud were modeled as a three-dimensional structure using the ANSYS Computer Code. The header and reinforcement ribs were modeled using quadrilateral plate elements. The circumference of the header was divided into 64 segments with nodes separated by an average of 5.6°. Each segment has at least 10 plate elements representing the header walls. Because of the uncertainty about the header corner welds, the model contains no moment or translation connection between the header wall plates. The only exception to this is when pressure forces the corners of the plates together. In this case simple support is modeled. Since fillet welds are used between the reinforcing plates and the header walls, no credit is taken for the weld's ability to carry moments. Each of the 30 reinforcement ribs is represented by 9 elements. The 8 fillet welds which provide a portion of the attachment are modeled by tienodes connecting plates of the shroud and header for a distance of 7 inches. The 8 gusset plates which provide the remainder of the attachment is modeled by two triangular plate elements. The modeling of the attachments is a refinement of the previous model used for the unreinforced header. The shroud is also modeled using quadrilateral plate elements and one dimensional gap elements to simulate the alignment pins and their interaction with the steam generator shell. Figure 4-1D shows the full 360° model which was used.

Attachment and Reinforcement Weld Analysis

Attachment Design

For the A Steam Generator internal header the decision was made to reinforce the header to such an extent that the corner welds would not be required for structural integrity. The internal header attachment design provides eight attachment points between the header and the shroud. Each of the attachment points is located near one of the shroud alignment pins. The attachment is provided by a large fillet weld between the shroud and header in the corner formed by the two parts. In addition, a gusset plate is welded between the bottom of the header and side of the shroud. The attachment design is shown in Figure 4-1C.

To provide reinforcement there are two ribs welded inside the header at each of the attachment points one on each side of the attachment welds and also a pair of reinforcing ribs at mid span between the attachment points. The ribs are connected to the inner and outer walls by fillet welds at least 8 inches long and to the top and bottom by fillet welds at least 2 inches long. This is also shown in Figures 4-1E and 4-1F.

Assumptions

The model for the analysis of the unreinforced header used tienodes between the header and the shroud. To convert these loads to stress required several assumptions. In this analysis the attachments have been modeled more realistically including representation of both the fillet weld and gusset. Because the actual components can be modeled the calculated stress intensities are compared directly to the allowable stress intensities.

The stress area of the fillet welds is taken to be the theoretical throat times the length. The stress area of the gusset is taken as the thickness time the length. For both welds a weld quality factor of .5 is used as is recommended for a fillet weld in Section III Subsection NB paragraph 3356 of the ASME Code 1977 Edition, through the Summer of 1977 Addenda.

The corner welds at the corners of the headers have been found to be cracked in some places and a complete inspection is impractical. Because of this no credit is taken in the analysis of these corner welds.

Load Combinations and Results

Level A & B

This analysis was performed for the combined Loads of Deadweight, Flow Induced Vibration, Operating Basis Earthquake and Thermal Transients. Flow induced vibration of the header due to random excitation was calculated and found not to exceed peak loads of 2880 lbs. horizontal and 77.4 lbs vertical once in 40 years. Flutter and Vortex Shedding were considered and found to be negligible. Because no credit is taken for the corner welds, a study was performed to determine the FIV loads which would occur if the existing cracks were to propagate to the point that no corner weld existed in the span between reinforcing plates. It was determined that neither random excitation, fluid elastic instability nor vortex shedding would cause significant plate vibration. The stresses predicted occur in the header and attachments were well below the code allowable for 10^6 cycles.

The steady state drag load created a net downward force of less than 1700 lbs. and a horizontal radial load of less than 60 lbs. The operating base earthquake for Rancho Seco, the plant with highest seismic loads, resulted in acceleration levels of 1.3g's horizontal and 2g's vertical*. All of these loads result in low stresses as demonstrated in the previous analysis. Because of this they are neglected in this analysis. The conditions which do not produce significant stresses are two transient conditions, secondary side

*These are the accelerations for the internal header due to steam geneator motions calculated using lumped mass dynamic models.

heatup and initiation of auxiliary feedwater. Both of these are thermal transients which create secondary stresses in the shroud and header. All of the other transients considered did not result in a sufficient change in temperature in the generator to produce significant stresses. In the earlier analysis, because of the simplistic modeling of the attachments, the secondary stresses in the attachments were conservatively considered to be primary. With the refined modeling techniques it was felt that sufficient accuracy existed to treat these stresses as secondary.

The first condition, heatup, causes stress because of the interaction of the shroud alignment pins with the shell. During heatup the shroud and header follows the steam temperature more closely than the shell resulting in a maximum Δt of 70°F. The shroud attempts to expand radially but is prevented by the alignment pins which contact the shell. The shell deflects into an eight lobed shape. The header which is also at the steam temperature tends to remain round. The analysis was performed by imposing the calculated radial displacement caused by70°F Δt, .026 inches, inward on the shroud at the eight alignment pin locations. The maximum stress intensity in the most highly stresses attachment weld due to this load is 6,600 psi compared to a secondary stress allowable of 30,000 psi. The maximum stress intensity in the most highly stresses reinforcing rib weld is 9,000 psi also compared to 30,000 psi. The allowable is equal to 3 S_m (Level A and B Primary + Secondary Stress Allowable) times a 0.5 weld qualify factor. The maximum stress intensity in the header walls is calculated to be 15,500 psi for this load. This is compared to an allowable of 60,000 psi.

The second transient condition, initiation of auxiliary feedwater, causes stress by cooling the shroud by splashback from the nozzle discharge. The splashback causes local cooling of the shroud at the 6 locations. The header is not cooled and tends to remain round thereby imposing loads on the attachments. The maximum stress intensity in the most highly stressed attachment is 16,600 psi and for the reinforcing rib is 13,300 psi compared to an allowable of 23,700 psi. The maximum stress intensity in the header walls is 23,200 psi compared to an allowable of 47,400 psi. The allowable is lower than the heatup case because of the higher temperature.

A fatigue analysis of the Level A & B conditions shows that the header attachment welds are adequate for 360 heatup transients 29,000 initiation of a AFW transients and the full compliment of all other transient listed for the plant. A fatigue stress concentration factor of 4 was used in the analysis.

Level C

Level C analysis was performed considering Deadweight, Flow Induced Vibration, Thermal Transients and Safe Shutdown Earthquake. All conditions for Level C are the same as analyzed for Levels A & B with the exception of the Safe Shutdown Earthquake which has acceleration levels twice that of the Operating Basis Earthquake. The additional stress due to SSE is small resulting in the Level A & B margins being limiting.

Level D

Two Load Combinations were considered: (1) Dead Weight, LOCA, and Safe Shutdown Earthquake; (2) Dead Weight, Main Steam Line Break (MSLB) and Safe

Shutdown Earthquake. The limiting case is the combination including Main Steam Line Break because of the lateral load resulting from the unsymmetric steam flow caused by the break. The loading was obtained from an analysis performed on a model representing a steam generator with a tall shroud rather than the combination of shroud and header. The loading taken from that analysis was a distributed pressure loading which caused a net hoop load on the header and a net side load.

The header, because it reduced the steam annulus is expected to cause a higher pressure drop that predicted by the model which simulated only thinner tall shroud. A study was performed to determine the effect this would have on the main steam line break pressure loads. For the previous analysis it was determined that a factor of 10 would conservatively bound the effect of the different geometry. This conservative factor resulted from using worst case estimates for the loss coefficients and using maximum Δp and fluid velocity irrespective of time. Since then, a more detailed review of the steam line break analysis indicates that the assumption of simultaneous maximum Δp and velocity is overly conservative because the two occurrences are widely spaced in time. The largest pressure differential occurs early before significant velocity is established. The use of the actual velocity at the time of the peak differential pressure has lead to a more realistic factor of 5. The conservative approach to calculating loss coefficients has been maintained unchanged.

The application of this load resulted in a maximum stress intensity of 6,700 psi on the most highly stressed attachment weld and 18,600 psi on the most highly stressed reinforcing rib weld. This is to be compared to an allowable stress intensity of 21,000 psi which is equal to 0.7 Su times a 0.5 weld quality factor. The header wall stress intensity is 39,900 psi compared to an allowable of 42,000 psi. The header wall stresses result mainly from bending stresses caused by the conservative assumption of no corner welds.

The load due to LOCA is not limiting because the LOCA accelerations of 13.75g horizontal and 8.25g vertical, although high, do not produce significant loads due to the relatively low mass of the header. Since this was demonstrated in the analysis of the unreinforced header, this load case was not analyzed for the reinforced header.

Reinforcement of Corroded Area at the A Attachment

During initial inspection of the header a hole in the top of the header was discovered. To provide the greatest reinforcement for this area the header was rotated so that the hole could be positioned between two reinforcing ribs at an attachment point. During repair the inner wall of the header was determined to have a significant loss in wall thickness in this same area. Additional reinforcement consisting of a 3/8 inch plate was added over this area in the inner wall. Since the inner wall is most highly stressed there was no need to also put reinforcement over the top hole. The result is that in this area, with the reinforcement, there is 108% of the cross sectional area that would exist in an undamaged inner and top wall. Therefore it is concluded that this area of the header will be at least as strong as an uncorroded section. The reinforcement design is shown in Figure 4-1G.

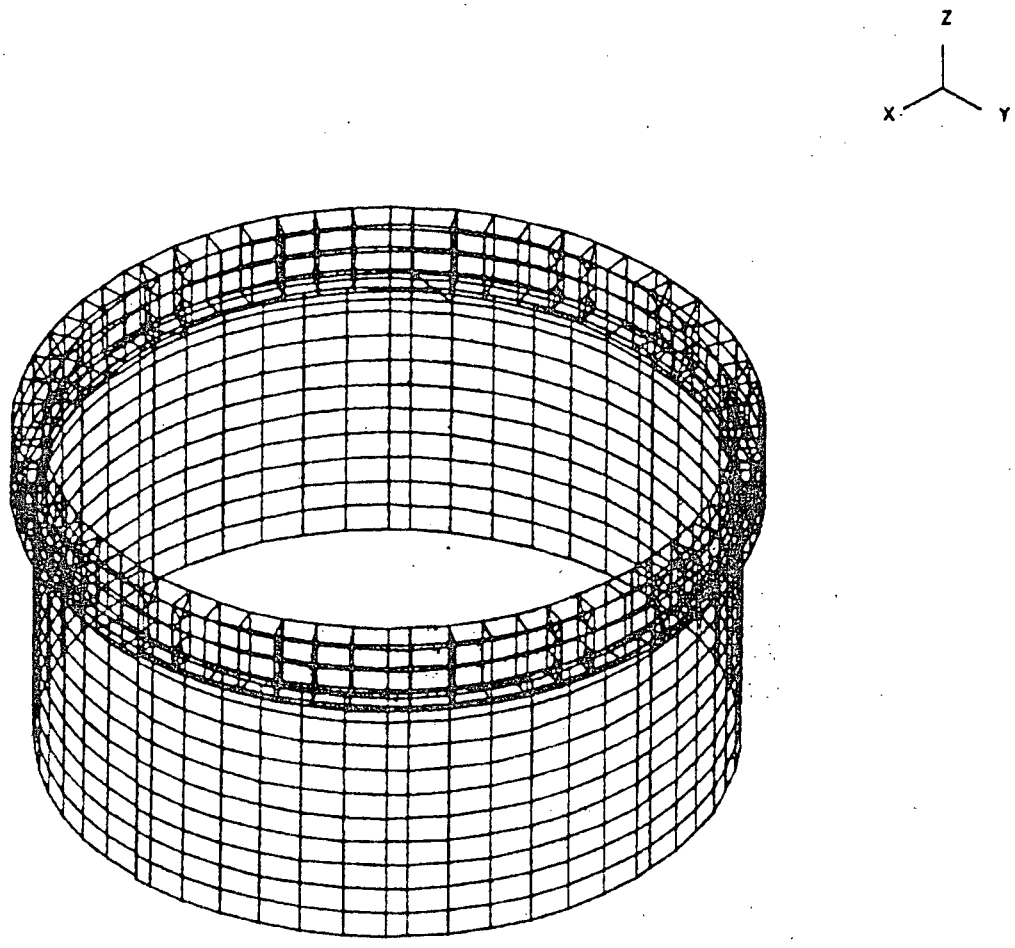

Figure 4-1D Complete 360° F.E. Model (A Header)

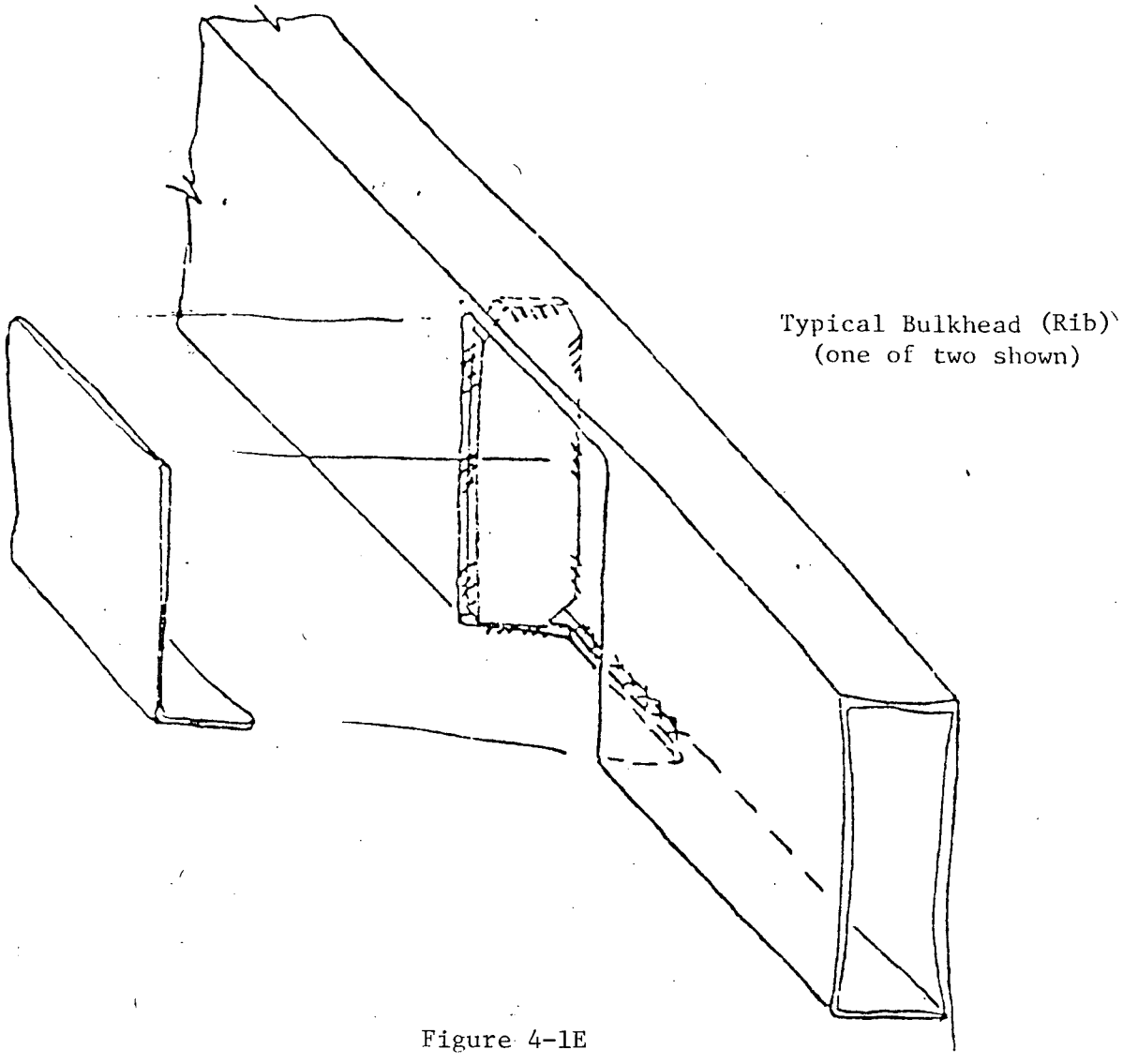

Figure 4-1E

"A" HEADER BULKHEAD
STABILIZATION TECHNIQUE

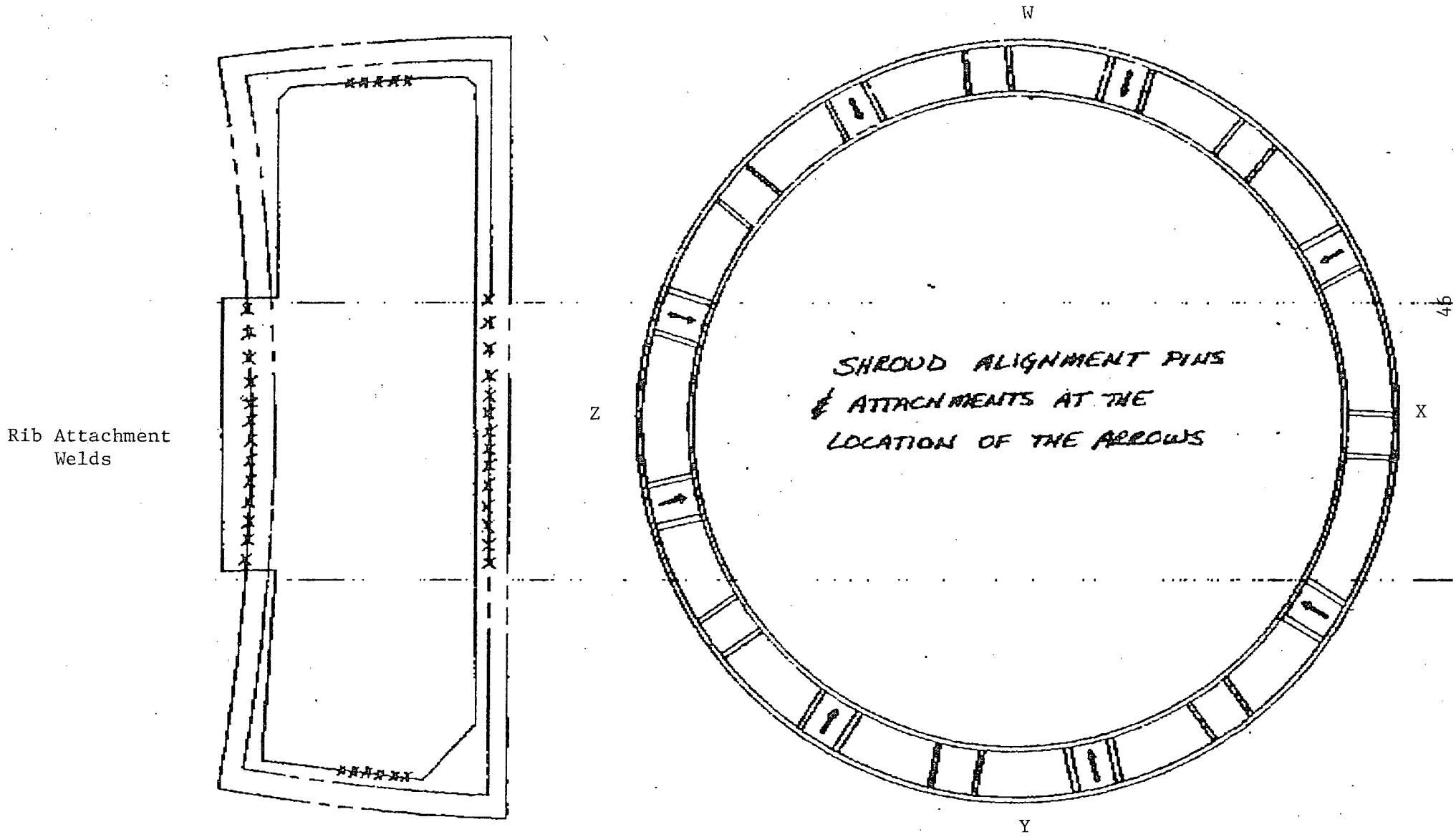

Figure 4.1F
"RIB" REINFORCEMENT LOCATIONS (A HEADER)

TUBE BUNDLE AREA

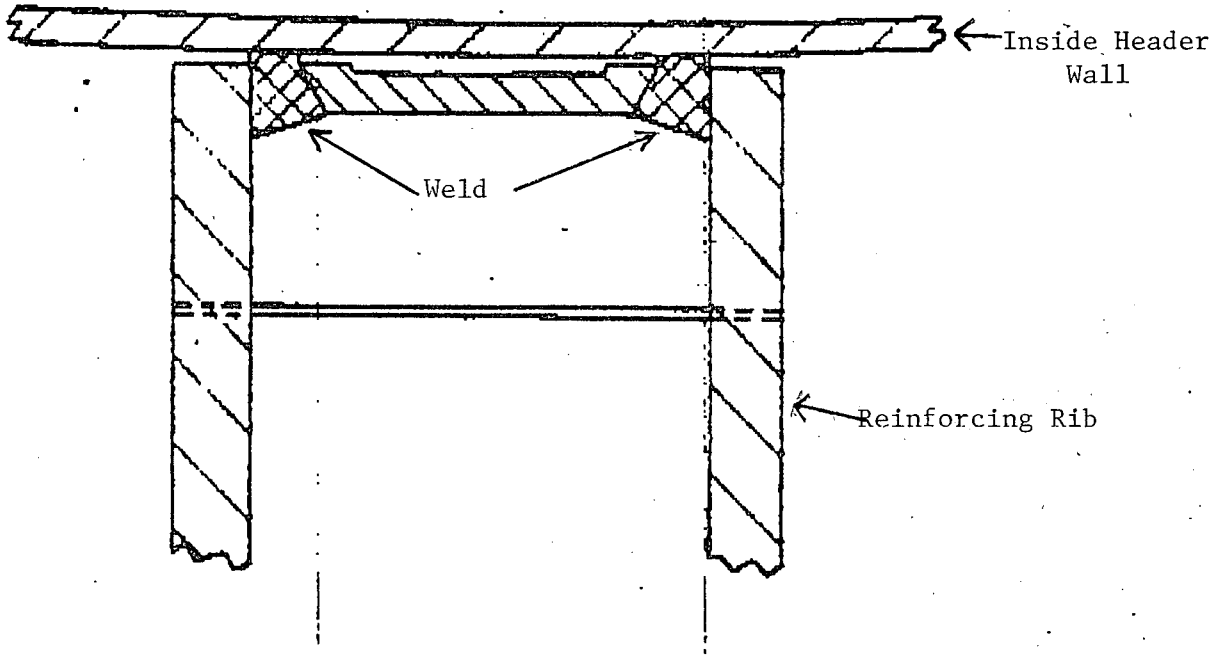

Figure 4.1G.

REINFORCEMENT OF CORRODED AREA (Top View)

Conclusion

The header attachment welds and reinforcing ribs are adequate for all anticipated loads. The requirement for these attachments is to hold the header in place atop the shroud and for Level A, B or C conditions to prevent contact between the header and tubes. The attachments and reinforcing ribs provide sufficient rigidity to satisfy this requirement. For Level D, the requirement is no tube rupture. The attachments, by preventing the header from breaking loose, avoid any potential for the header to cause tube rupture.

4.2.5 Analysis of Stabilized Header to Tube Clearance

The minimum required clearance between the steam generator tubes and the header was first arrived at in a qualitative manner. There is a .250 inch clearance between steam generator tubes which has proved through many reactor years of operation to be adequate to prevent tube damage. The minimum tube to header gap was set at one-half this or .125 inches.

Qualitative analysis for Level A, B and C conditions have been performed to assure that the predicted tube and header motion is less than this minimum clearance of .125 inches and thus no contact will occur.

During Level A and B conditions the effects of dead weight, flow induced vibration, operating base earthquake, and thermal transients have been considered. Deadweight is not significant. Flow Induced vibration of the tubes has been addressed in analysis and test. The lane tube which is known to vibrate the most, has a vibratory amplitude of less than .015 inches. For OBE tube vibration is calculated to be 3×10^{-6} inches which is negligible. The header sees such small loads due to both FIV and OBE that its motion is less than .001 inches. During the heatup transient the shroud is restricted by the shell while the tubes move with the tubesheet which can result in a maximum radial relative motion of .026". This is the maximum shroud deflection and is a conservative estimate for the header. If these motions are assumed to occur simultaneously the total would be 0.042 inches which is approximately 1/3 the .125 inch requirement.

Level C conditions again vary only in that Safe Shutdown Earthquake is considered. The additional transients listed are either not significant in that they do not affect secondary side temperatures or they are similar to the transients considered for Level A & B. The doubling of the acceleration level for SSE has no significant affect on either tube or header relative motion.

There are two conditions considered for Level D conditions LOCA and Main Steam Line Break. For both of these conditions the requirement is that steam generator tubes not rupture. For LOCA, the accelerations do not cause sufficient motion to cause the tube to touch the header. The tube motion is calculated to be 1×10^{-5} inches and the header motion to be .002-.005 inches. For the main steam line break the drag force from the high velocity steam blowing across the tubes may be sufficient to cause the tubes to contact the header. This is acceptable because of the high ductility of the inconel tube which can accommodate as much as 50% strain without rupture. The plastic strain which would result if the tube were to deflect sufficiently to touch the header is less than 5%. This leaves a large margin of ductility to accommodate any local denting which might occur because of contact with the

corner of the header.

4.3 External Header

4.3.1 Description

The new external header will be connected to the existing plant auxiliary feedwater line by 6" diameter piping. The header will be about a 300° circumferential ring made from 6 inch schedule 80 pipe capped at each end. Oconee 3 will employ six 3 inch schedule 80 pipe risers spaced around the ring to feed auxiliary feedwater through the steam generator shell and shroud to the secondary side of the tubes. Flanges will be located in the vertical riser just above the ring and at the point of entry into the steam generator shell.

The centerline of the riser inlet to the steam generator will be located about 14 inches above the top (15th) tube support plate. A tapered thermal sleeve will direct the flow from the shell opening through the shroud to the steam generator secondary side. The risers will contain variable size orifices at the flange in the vertical run to help equalize distribution of flow. Figures 4-2 and 4-3 show the arrangement of the replacement external AFW header.

4.3.2 Functional Design Requirements

Specifications have been issued to insure the header design meets its two basic functional requirements, i.e., supplying and distributing auxiliary feedwater to the steam generator tube bundle and providing distribution of recirculating water and chemicals during wet lay-up.[3]

The effects of flow-induced vibration have been examined [5] [6] to insure that the retrofit design is at least equal to the existing external header design in this area.

The applicable ASME codes will be those which are consistent with the licensing basis of the individual plants. Design, fabrication and analysis of the B&W supplied components will meet the requirements of Section III of the ASME code, Class 2 for the header ring, risers and shell flanges.[4]

4.3.3 Comparison to Existing Designs

As pointed out in Section 1.0 of this document the retrofit of the auxiliary feedwater external header has the advantage of applying a design proven in more than 22 reactor years of operation at five operating plants. No evidence of water hammer or other condensation-induced pressure surges have been noted. The thermal sleeves have been inspected at all operating plants that use the external header design and have been found to be free of damage due to thermal shock or condensate-induced pressure surge.

There are two additional features in the external header design which tend to minimize the possibility of any damage by condensation-induced pressure surges. These are:

1) Top discharge nozzles to preclude header ring draining and surpress slug information, and

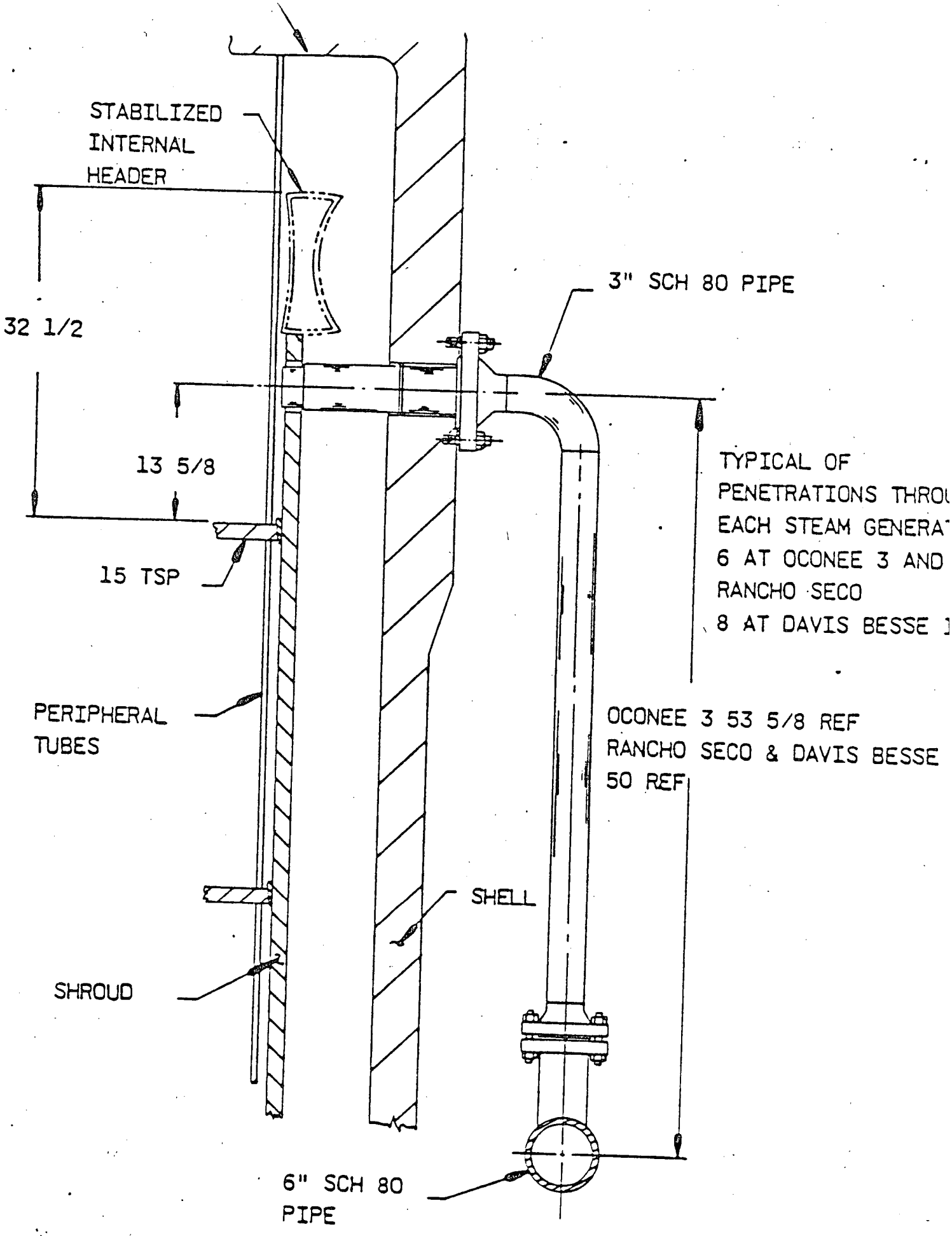

Figure 4-2

RANGEMENT OF REPLACEMENT EXTERNAL AFW HEACER-VERTICAL CROSS-SECTION

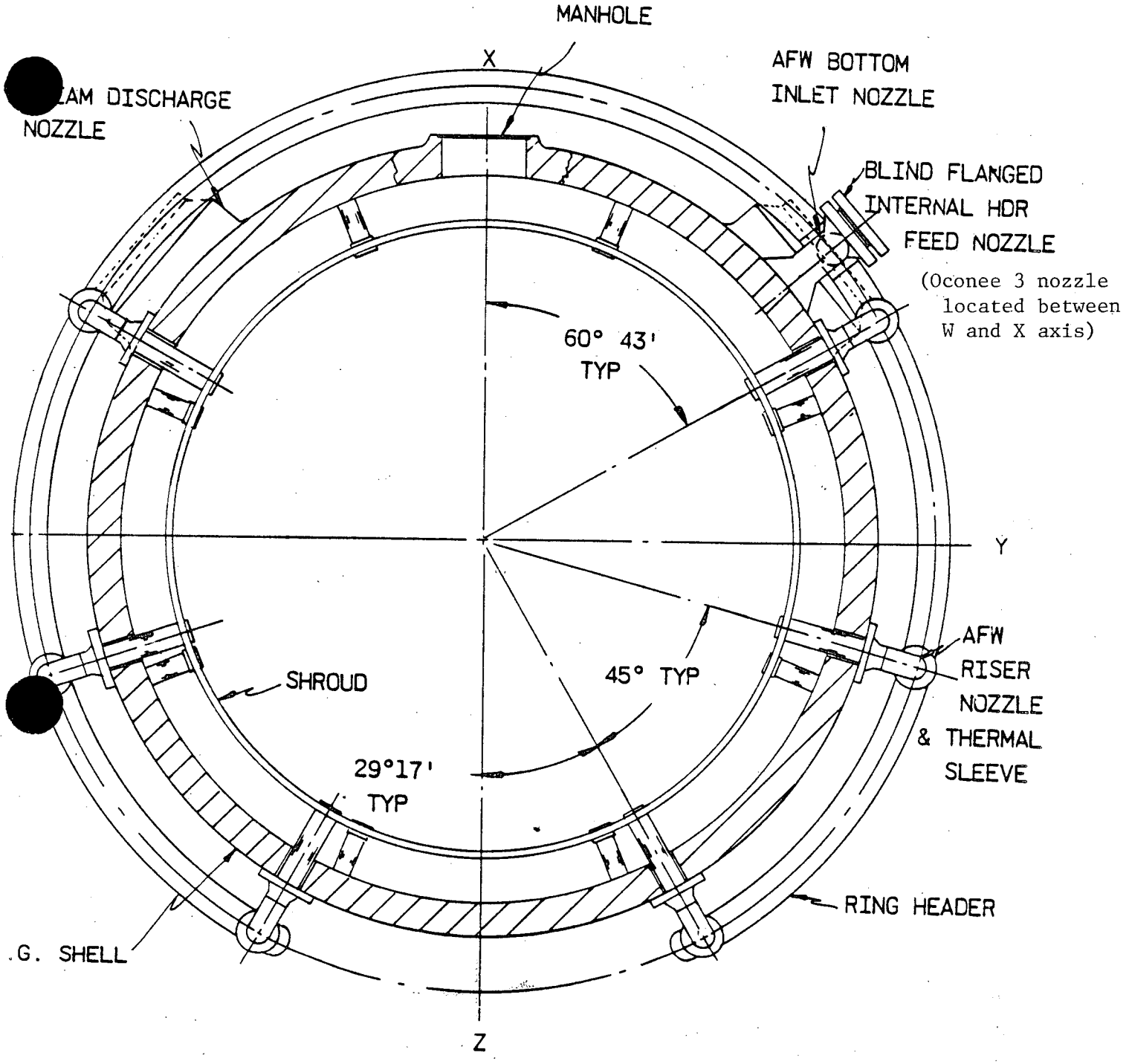

6 NOZZLE CONFIGURATION

SMUD

0-3

Figure 4-3

ARRANGEMENT OF 6 NOZZLE REPLACEMENT EXTERNAL AFW HEADER

-PLAN VIEW-

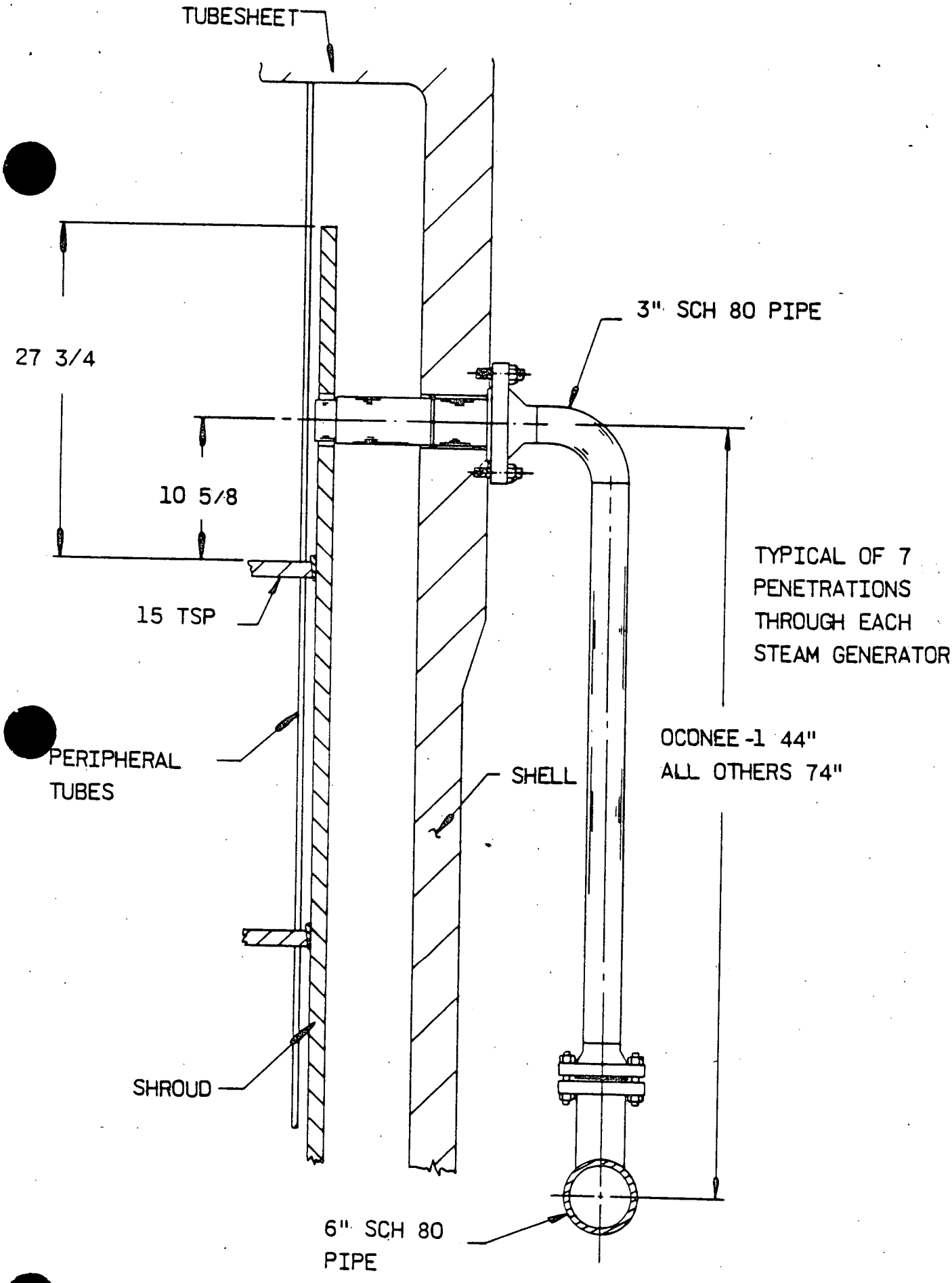

FIGURE 4-4

IGEMENT OF EXISTING EXTERNAL AFW HEADER - VERTICAL CROSS-SECTION

2) Short horizontal runs to limit void formation and slug acceleration.

When compared with Oconee 1 and 2, the Oconee 3 AFW system is identical up to the newly installed external AFW ring header. The only difference between the three units at that point is that Oconee 1 and 2 have seven vertical risers versus six on Oconee 3. However, since the Z axis nozzle on Oconee 1 and 2 is sealed off and no longer functional, the systems are practically identical up to the nozzle thermal sleeves. Since the Oconee 1 and 2 units have been found free of any sort of water hammer problem through years of actual operation, there is absolutely no reason to suspect that the same system on Oconee 3 should be susceptible to a water hammer problem. To conduct a water hammer test would subject the system to an unjustified transient cycle and would subject the workers to needless radiation exposure. For these reasons, no water hammer tests are planned prior to operation.

There are a few other minor differences between the existing design and the retrofit design. Figure 4-4 shows the existing external AFW header arrangement. The injection point for AFW in the retrofit is about three inches higher than in existing designs to allow access for securing the internal header. This could result in an increase in flow induced vibration loads. This increase however is more than offset by a reduction in these flow loads due to a more gradual taper in the thermal sleeve resulting in a lower discharge velocity.

Two features of the retrofit design should provide more equal distribution of AFW flow. These are:

1) The use of variable size orifice plates in the flanges of the vertical riser

2) Feed to the risers at circumferential locations nearer the midpoint of the header ring rather than from one end as is the case for existing designs.

Lastly the thermal sleeve was redesigned and will be constructed partially of inconel, rather than carbon steel providing improved fatigue properties.

4.4 Loose Parts

It is the intent, as part of this repair, to locate and remove all loose parts. Should it be impossible to account for all parts, the location of such parts would be either at the 15th tube support plate, in the steam annulus or possibly in the Main Steam Line. Oconee 3 was found to have all brackets in place and a total of nine dowel pins missing. The brackets and remaining dowel pins have been removed. The one missing dowel pin in the A AFW header and six of the eight missing dowel pins in B have been located and removed from the steam annulus (as was expected). The remaining two dowel pins in B have not been located. An extensive visual inspection of the 15th tube support plate has been made in B and no evidence has been found that any dowel pins are or have been in this area. This is significant since the dowel pins are 2 11/16 inch long by 3/4 inch in diameter while the maximum distance from the header to the periphery tubes at each bracket/dowel pin location (based on the tube patterns and actual measurements taken in the repair effort) is less than 2 inches. The tubes themselves are only 1/4 inch apart. Since neither

gross damage nor spreading of tubes have been noted at any location, the pins could not have entered the tube bundle. It is possible that the pins are captured in some way in the steam annulus, but an extensive cleaning operation in this area has not located these two pins. The other final possibility is that the pins have entered the main steam line. This is of no safety concern since even if the pins were pushed by steam flow along the main steam lines, they could not pass through the screens at the main steam stop valves and would be permanently captured at that position (the position of the screens positively precludes any interference with the operation of the main steam stop valves.

Blankets to catch particles from the boring operations on the shell and shroud followed by a vacuuming to remove residual chips and dust will be used to preclude the machining operations producing contamination or loose parts. A careful inventory of all tools and parts that enter and leave the steam generator is also being kept.

The Vibraiton and Loose Parts Monitoring System at Oconee 3 has sensors located at the top of each steam generator outside the shell near the top of the tubesheet. This sensor location provides good indication of a loose part on the primary side of the steam generator but is not considered reliable as an indication of loose parts on the secondary side.

4.5 Eddy Current Inspection and Tube Plugging

After the internal header has been secured to the shroud an eddy current inspection and debris analysis will be performed on peripheral tubes. Any tubes with greater than 40% wall thinning or in a location where the secured internal header and bracket clearance is less than 1/8" will be stabilized and removed from service by plugging.

Tube stabilization is done by inserting into the tube to be plugged 1/2" diameter inconel rods of whatever length is necessary. Varying lengths are obtained by coupling standard rod lengths. Each rod has a male and female thread at opposite ends to permit coupling. After coupling, the female thread is crimped to prevent decoupling. The rods are screwed into the plug prior to welding.

This stabilization technique is used as a capture mechanism to prevent instabilities due to potential flow-induced vibration and is not intended as a structural device.

The stabilizers are only used in conjunction with plugs in the upper tube sheet. More than 100 of these have been installed in OTSGs since inception of their use in 1976.

5.0 Pre-Operational Tests

Shop and field hydrostatic tests will be performed on the new external header piping, ring header, and risers and on the internal AFW header inlet nozzle and blind flange. These tests will be in accordance with the ASME code requirements.

A leak test of the secondary side will be made after external AFW header shell flange and nozzle installation.

Finally a flow demonstration test at cold shutdown conditions will be run to verify that all lines are clear and free from obstructions. This test will verify that auxiliary feedwater is delivered to the steam generator and will act as a final system leak test.

Prior to restart, a fill/hot soak/drain of the steam generators will be conducted to remove any previously unremoved residue of the cutting fluid from the tubes and shroud walls. The cutting fluid used was specially selected to ensure no adverse chemical properties. The steam generator "rinse" will be performed as an added precaution to ensure steam generator chemistry will be properly maintained.

6.0 Post Operation Inspections

Selected special interest peripheral tubes will be EC inspected in conjunction with other EC tube inspections as required by technical specifications but will not be considered as a part of those required inspections.

At the next two refueling outages for Oconee 3, visual inspections will be made through each of the injection nozzles and the X axis manway of the fillet weld and gusset as well as the general condition of the tubes at each injection point. The headers will be visually inspected at these locations to ensure that no additional degradation has taken place. The B header corner welds will be visually inspected at each location to ensure the integrity of the welds. The A header bulkheads convenient to the injection holes will be inspected visually to ensure their integrity. In addition, a special inspection will be made through the manway and the old AFW nozzle of the degraded areas of the header. The degraded areas will be positioned at these points and special inspection holes provided in the header to aid in monitoring their condition. Based on findings at the next two refueling outage inspections, further such inspections will be performed at least at the next 10 year ISI. Duke Power is committed to the safe operation of our plants and will plan and conduct the necessary inspections to ensure this goal is achieved.

The external AFW header will be inspected in the ISI program in line with the inspections performed on the same systems installed on Units 1 and 2.

7.0 Safety Assessment and Summary

Duke Power Company recognizes that this repair has safety significance. The retrofitted external header is a component of a safety system whose function is designed to mitigate the following events:[3]

1) Loss of Normal Feedwater (LONF) - including main feedwater line break

2) Loss of offsite AC Power

3) Main Steam Line Break (SLB)

4) Small Break Loss of Coolant Accident (LOCA) - less than 0.5 ft^2 break

Furthermore, the repair has considered the need to secure the internal header to assure no damage to steam generator tubes, while retaining the shroud extension function.

The first of these two safety functions, the ability of the steam generators to provide decay heat removal for the above events, has been demonstrated at five different plants during more than 22 reactor years of operation (including Oconee 1 and 2). There are only minor differences between the Oconee 1 and 2 design and the new Oconee 3 external header as described in section 4.3.3 of this report. These minor differences were carefully evaluated in the design of this system and compensating features (such as a more gradual taper in the thermal sleeve to offset the 3 inch higher injection point) were incorporated to ensure an essentially identical functional capability.

As in the case of the external header careful thought and analysis [7] has been put into the repair of the internal header to assure it is securely fastened in-place. The minimum 1/8" clearance between the header and the tubes will be verified after tie down. As an added precaution any tubes closer to the header than 1/8" will be stabilized and removed from service. (Measurements at Oconee B header show a nominal 1/2 inch minimum clearance between the header and tubes with similar results expected in the A header after stabilization.)

In 1981, a thermal sleeve was removed at Oconee to examine peripheral tubes at an AFW external header injection point. Not only was the sleeve in good condition, but also no damage from jet impingement or flow induced vibration was noted on peripheral tubes. This adds assurance to the validity of B&W and Duke Power analyses that show these two mechanisms not to be a concern for the external header design.[5] [6]

Both the retrofitted external header and the secured internal header have had independent evaluations at B&W by in-house Design Review Boards and the Duke Power Company Nuclear Safety Review Board. The Boards have carefully considered the repair effort and have not identified any unreviewed safety questions.

In summary, Duke Power Company working closely with B&W and the other affected owners believe they have established a logical cause for the original problem, and have a repair program that fully considers that cause and will preclude its recurrence. In addition the replacement external header is a proven design that has carefully been analyzed and will be tested. As an added precaution, although the redesign considers the full life time of the plant, the repaired units will be inspected at the end of the next two fuel cycles to assure no degradation of the units. These facts justify start-up and continued operation of the affected plants.

8.0 References

1. NUREG-0291, NRC-1, An Evaluation of PWR Steam Generator Waterhammer, Final Technical Report, June 1, 1976 - December 31, 1976, by Creare, Inc., Hanover, NH.

2. Engineering Requirement for Internal Header Stabilization B&W Doc. No. 51-1134169-06.

3. Functional Specification for Steam Generator Emergency Feedwater Header B&W Doc. No. 18-1134783-00.

4. Equipment Specification for Steam Generator Auxiliary Feedwater Header B&W Do. No. 08-1134172-01.

5. Response of Tubes to Random Turbulence Excitation - AFW B&W Doc. No. 32-1134728-00.

6. Revised AFW Header Capacity B&W Doc. No. 32-1134729-00.

7. Internal AFW Header Tiedown Analysis B&W Doc. No. 32-1134668-00.

ATTACHMENT B

Response to NRC Letter Dated June 23, 1982
Auxiliary Feedwater Header Repair - Request for Additional Information

Request 1

Provide a detailed description of the repairs and modifications to the auxiliary feedwater system. Describe how the as modified system compares to the auxiliary feedwater design used previously in other operating B&W plants. Compare the expected performance of the modified design to that of the original design and of earlier B&W units.

Response 1

For the description of the repairs and modifications, see Section 4 of Attachment A. Identification of differences from existing systems is in Section 4.3.3 and 7.0 of Attachment A.

Request 2

Describe the program to identify and recover loose parts resulting from previous damage and those that may be produced during repair. Describe your loose parts monitoring system(s) and discuss detection capability particularly with reference to any known or potential loose parts. If loose parts will exist after operation, evaluate the safety consequences.

Response 2

Section 4.4 of Attachment A addresses the loose parts issue in detail and specifically provides the requested information. In addition, the loose parts monitoring system (LPMS) at Oconee was described in detail in a May 11, 1982 letter from Mr. William O. Parker, Jr. to Mr. Harold R. Denton.

Request 3

Describe the types of pre-repair inspections performed on the steam generator shell, shroud and header and discuss the results. Supply a drawing or drawings which show the limits of each inspection performed. Identify the criteria used to evaluate the soundness of the header and discuss, where applicable, the ability of the remote visual inspections to detect flaws with respect to the acceptance criteria.

Response 3

Section 2.3 of Attachment A describes in detail the Oconee 3 inspections.

Request 4

Describe the original criteria for minimum acceptable clearances between the AFW header and supports and the peripheral tubes, and relate this to the clearances that will exist after repairs are completed. If clearances after repair are less than the minimum acceptable for the original design, provide the necessary analyses to justify operation under normal, transient, and accident conditions.

Response 4

The acceptability of tube to internal header clearances is discussed in Section 4.1 of Attachment A. Following the internal header stabilization the B header was found to have the nominal as built clearances for the original design. The same results are expected for the A header when stabilization is complete, but the minimum acceptable clearances will not be violated.

Request 5

Discuss your criteria and procedures for plugging and stabilizing of peripheral tubes.

Response 5

Tube plugging is discussed in Section 4.5 of Attachment A.

Request 6

Provide an analysis which demonstrates acceptable results when maximum expected forces are applied to the stabilized header considering normal, transient, and accident conditions.

Response 6

Sections 4.2 and 7 of Attachment A discuss the post stabilized header forces.

Request 7

Describe your acceptance criteria for all welds used to stabilize or reinforce the header. Describe in detail the inspection program to be followed.

Response 7

Sections 4.1 and 4.2 discuss the stabilization, reinforcement, and inspection processes in detail.

Request 8

What inspections will be performed following the stabilization of the header

to ensure that distortion from welding does not reduce clearances between tubes and the header below the minimum acceptable?

Response 8

In addition to direct measurement of tube to header clearances through the injection holes and the manway after stabilization, the inspections described in Section 4.5 of Attachment A will be performed to verify no violation of the minimum clearances allowed.

Request 9

Provide an analysis of AFW flow induced tube vibration for the modified AFW design.

Response 9

Sections 4.3.2, 4.4.4 and 7 of Attachment A discuss in detail the issue of flow induced vibration when utilizing an external auxiliary feedwater header.

Request 10

Describe your plans for revision of the ISI/IST program to include steam generator internals on the steam side.

Response 10

Section 6 of Attachment A describes the planned post-operational inspections.

Request 11

Describe the post-repair startup test and inspection program, including water hammer tests, to be conducted prior to the resumption of power operations.

Response 11

Section 5.0 of Attachment A discusses in detail the planned pre-operational tests. As explained in that section a water hammer test for Oconee 3 is not justified and is not planned.