Part 21 (PAR) Event # 51260

Rep Org:	FLOWSERVE CORPORATION	**Notification Date / Time:**	07/24/2015 04:55 (EDT)
Supplier:	FLOWSERVE CORPORATION	**Event Date / Time:**	07/24/2015 (EDT)
		Last Modification:	07/24/2015
Region:	1	**Docket #:**	
City:	RALEIGH	**Agreement State:**	Yes
County:		**License #:**	
State:	NC		
NRC Notified by:	MICHAEL ROY	**Notifications:**	SILAS KENNEDY R1DO
HQ Ops Officer:	JEFF ROTTON		AARON MCCRAW R3DO
Emergency Class:	NON EMERGENCY		HEATHER GEPFORD R4DO
10 CFR Section:			PART 21/50.55 REACTORS EMAIL
21.21(d)(3)(i)	DEFECTS AND NONCOMPLIANCE		

PART 21 - ACTUATOR SHAFT DID NOT MEET DIMENSIONAL REQUIREMENTS

The following information was excerpted from a facsimile provided by Flowserve:

"In accordance with the provisions of 10CFR Part 21, [Flowserve] has identified a potential issue and is submitting our evaluation of the event.

"DESCRIPTION: Energy Northwest - Columbia Station reported a replacement actuator shaft for 6-900 Anchor/Darling swing check was different than the one removed and could not be installed. After consultation with Flowserve, it was determined the actuator shaft did not meet the dimensional requirements of the manufacturing drawing. The shaft includes an off-set lug that engages the hinge and allows testing or exercising the valve disc. The shaft diameter opposite the lug was too large but must be equal to or less than the basic diameter adjacent to the lug in order to allow free disc swing.

"SCOPE: Replacement actuator shafts supplied by Flowserve using manufacturing drawings that do not definitively specify the radius/diameter at the lug. Applies to Anchor/Darling swing check valves with levers or actuators.

"PROPOSED ACTION: Flowserve will revise actuator shaft drawing to clearly define the radius/diameter at the lug. Flowserve will notify the customers of the attached evaluation of the defect and will request that the actuator shafts be returned to Flowserve for evaluation and/or replacement at no charge.

"SUBJECT: Actuator Shaft supplied for 6-900 Exercisable Swing Check Valve, Drawing No. 3489-3 manufactured by Anchor/Darling Valve Co. and installed at Energy Northwest (ENW) - Columbia Station.

IE19
NRR

"ROOT CAUSE: The actuator shaft was machined by a Flowserve subvendor which incorrectly interpreted the machining drawing and produced the shaft with a large, out of tolerance radius around the lug. The drawing was not clear to the subvendor. Flowserve inspection did not discover the discrepancy during subsequent dimensional inspection.

"POTENTIAL EFFECT: An excessively large diameter at the lug will not allow installation of a replacement actuator shaft. A shaft with a diameter opposite the lug that is greater than design but still small enough to allow installation could retard or prevent free disc swing and adversely affect check valve function.

"EVALUATION: Swing check valves normally operate automatically reacting to fluid flow and do not include external operating mechanisms. Some valves include external mechanisms to confirm valve operation using an external lever or actuator to cycle the disc. Normally these check valves are allowed to swing freely and the external mechanism is not engaged. The external mechanism is only engaged for testing or exercising. The engagement is accomplished by a lug on the actuator shaft that rides in a cut out in the hub of the hinge. The hinge rotates on the actuator shaft during normal, free operation therefore the clearance between the hinge hub bore and shaft is a critical design feature and can affect operation. Proper operation of valve assemblies are verified during production testing therefore are not within the scope of this evaluation.

"CONCLUSION: Although the ENW actuator shaft could not be installed due to the excess material, inadequate removal to allow installation could affect the function. In addition shafts manufactured to similar manufacturing drawings supplied as replacement parts could be capable of installation but not allow complete free disc / hinge swing."

Affected plants include Exelon - Limerick, Exelon - Quad Cities, and Energy Northwest - Columbia.

****

FLOWSERVE®

Flow Control Division
Anchor/Darling Valves
BW/IP Valves
Edward Valves
Valtek Control Products
Worcester Valves

July 24, 2015

US Nuclear Regulatory Commission
Document Control Desk
11545 Rockville Pike
Rockville, MD 20852-2746

Subject: Energy Northwest Columbia – Actuator Replacement Shaft Drawing 3489-3
Exelon Limerick – Actuator Replacement Shaft Drawing W9223896
Exelon Quad Cities – Actuator Replacement Shaft Drawing W8422061, 62

This is to notify the US Nuclear Regulatory Commission that, in accordance with the provisions of 10CFR Part 21, we have identified a potential issue and are submitting our evaluation of the event.

DESCRIPTION: Energy Northwest – Columbia Station reported a replacement actuator shaft for 6-900 Anchor/Darling swing check was different than the one removed and could not be installed. After consultation with Flowserve it was determined the actuator shaft did not meet the dimensional requirements of the manufacturing drawing. The shaft includes an off-set lug that engages the hinge and allows testing or exercising the valve disc. The shaft diameter opposite the lug was to large but must be equal to or less than the basic diameter adjacent to the lug in order to allow free disc swing.

SCOPE: Replacement actuator shafts supplied by Flowserve using manufacturing drawings that do not definitively specify the radius/diameter at the lug. Applies to Anchor/Darling swing check valves with levers or actuators. See table 1 of attached evaluation for list of applicable replacement parts.

PROPOSED ACTION: Flowserve will revise actuator shaft drawing to clearly define the radius/diameter at the lug. Flowserve will notify the customers in table 1 of the attached evaluation of the defect and will request that the actuator shafts be returned to Flowserve for evaluation and/or replacement at no charge.

Please do not hesitate to contact me if you have any questions or require additional information.

Respectfully submitted,

Michael V. Roy
Quality Assurance Manager
Flowserve Corporation
1900 S Saunders St.
Raleigh, NC 27603

FLOWSERVE

ENGINEERING EVALUATION
10CFR21 File No. 89

A 7/23/15

SUBJECT: Actuator Shaft supplied for 6-900 Exercisable Swing Check Valve, Drawing No. 3489-3 manufactured by Anchor/Darling Valve Co. and installed at Energy Northwest (ENW) - Columbia Station.

PROBLEM: ENW – Columbia reported the replacement actuator shaft was different than the one removed and could not be installed. After consultation with Flowserve it was determined the actuator shaft did not meet the dimensional requirements of the manufacturing drawing. The shaft includes an off-set lug that engages the hinge and allows testing or exercising the valve disc. The shaft diameter opposite the lug must be equal to or less than the basic diameter adjacent to the lug in order to allow free disc swing. See figures 1 photos and 2 drawing.

SCOPE: Replacement actuator shafts manufactured by a Flowserve subvendor using manufacturing drawings that do not definitively specify the radius/diameter at the lug. Only applies to Anchor/Darling swing check valves with levers or actuators. See table 1 for list of applicable replacement parts.

ROOT CAUSE: The actuator shaft was machined by a Flowserve subvendor which incorrectly interpreted the machining drawing and produced the shaft with a large, out of tolerance radius around the lug. The drawing was not clear to the subvendor. Flowserve inspection did not discover the discrepancy during subsequent dimensional inspection.

POTENTIAL EFFECT:
An excessively large diameter at the lug will not allow installation of a replacement actuator shaft. A shaft with a diameter opposite the lug that is greater than design but still small enough to allow installation could retard or prevent free disc swing and adversely affect check valve function.

EVALUATION: Swing check valves normally operate automatically reacting to fluid flow and do not include external operating mechanisms. Some valves include external mechanisms to confirm valve operation using an external lever or actuator to cycle the disc. Normally these check valves are allowed to swing freely and the external mechanism is not engaged. The external mechanism is only engaged for testing or exercising. The engagement is accomplished by a lug on the actuator shaft that rides in a cut out in the hub of the hinge. The hinge rotates on the actuator shaft during normal, free operation therefore the clearance between the hinge hub bore and shaft is a critical design feature and can affect operation. Proper operation of valve assemblies are verified during production testing therefore are not within the scope of this evaluation.

CONCLUSION: Although the ENW actuator shaft could not be installed due to the excess material, inadequate removal to allow installation could affect the function. In addition shafts manufactured to similar manufacturing drawings supplied as replacement parts could be capable of installation but not allow complete free disc / hinge swing.

Flowserve U S Inc
Flow Control Division

Raleigh Operations
PO Box 1961
1900 South Saunders Street
Raleigh, NC 27603

Toll Free: 1-800-225-6989
Phone: 1-919-832-0525
Facsimile: 1-919-831-3369
www.flowserve.com

FLOWSERVE

ENGINEERING EVALUATION
10CFR21 File No. 89

Figure 1
ENW Photos of Removed and Replacement Actuator Shafts and Hinge with Disc

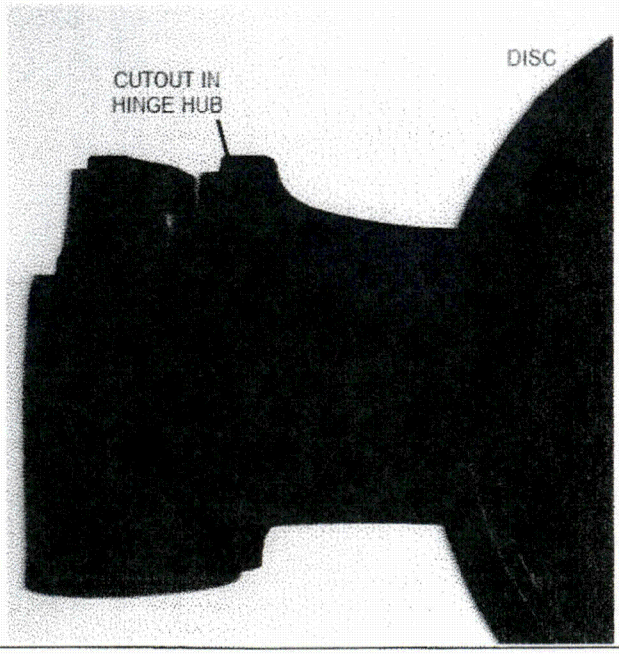

FLOWSERVE

ENGINEERING EVALUATION
10CFR21 File No. 89

Figure 2
Drawing Showing Installed Actuator Shaft and Evaluated Area

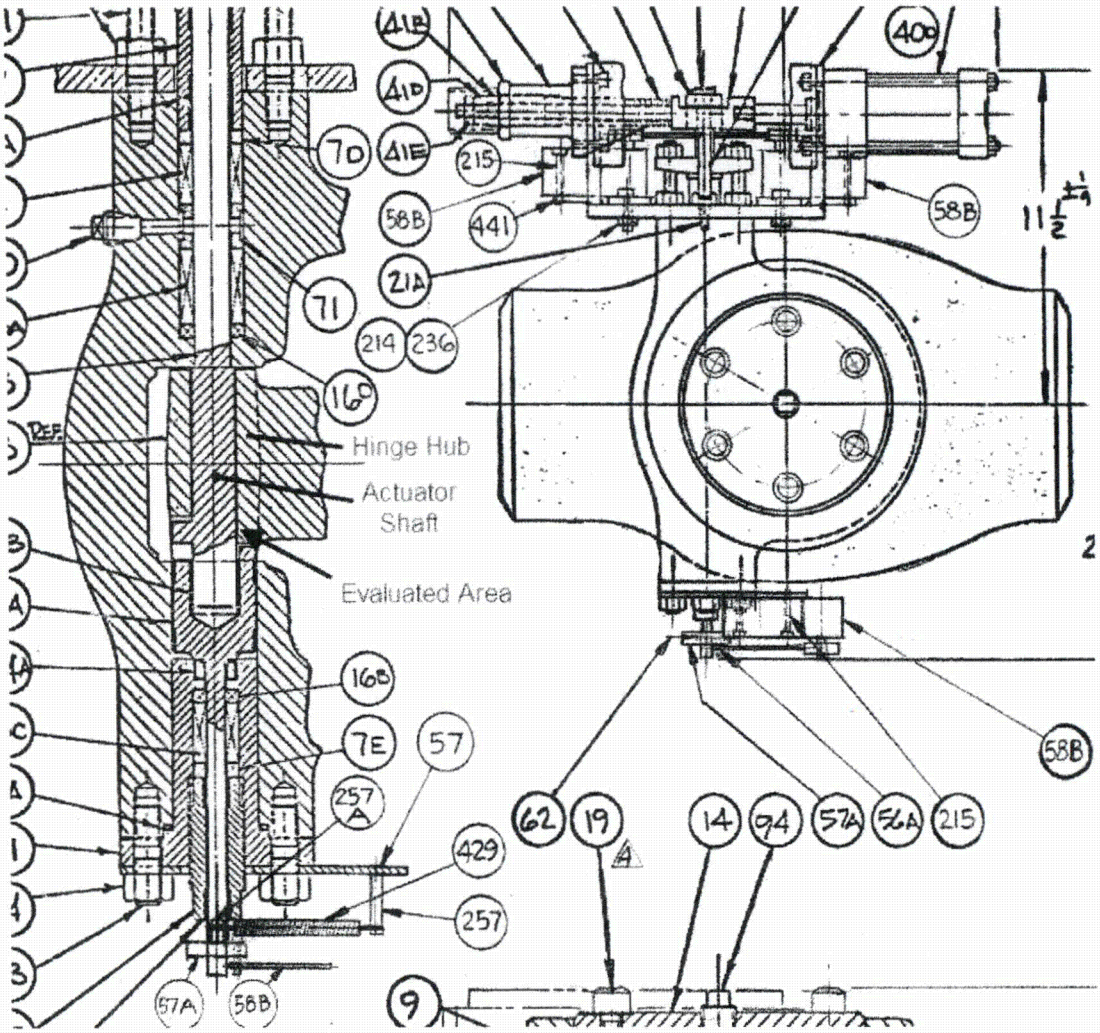

FLOWSERVE

ENGINEERING EVALUATION
10CFR21 File No. 89

TABLE 1
REPLACEMENT ACTUATOR SHAFTS

A/DV Swing Check Actuator Shafts Supplied as Replacements
Manufactured by Subvendor

Evaluation 10CFR21-89
CAR 1392
MDC 7/10/2015

Shaft Part No.	QTY	Drawing	SO	Customer	Drawing	Description		Ship Date
041193269991100	1	B62041	110965	Exelon - Limerick	W9223896	3-150 SC	Test Lever	4/22/2015
041016552283801	1	B63931	22838	Exelon - Quad Cities	W8422061,62	4-900 SC	Test Lever	2/27/2003
041290536019701	1	C32576	60197	ENW-Columbia	3489-3	6-900 SC	Exercisable Air Cylinder	12/30/2010

Mark D Cowell 7/23/15

Prepared By: Mark D. Cowell, PE
Engineering Specialist
Flowserve Inc., Raleigh Operations

FLOWSERVE

DATE INITIATED: 6/4/15	PROPOSAL DUE: 6/16/15	**CORRECTIVE ACTION REQUEST**
MANAGER/SUPERVISOR OR VENDOR: Rebecca Blankenship		
PART, RT# OR OTHER IDENTIFIER: PO 00331494, Part number 04129053 6019701		
10CFR21 EVALUATION REQUIRED? Y ☒ N ☐ Event # 89 MJC 7/24/15		INTERNAL ☒ EXTERNAL ☐
HOW IDENTIFIED: Energy NW VCAR 331494-01		CAR # 1392
INITIATED BY: Kerri Madden	CODE MATERIAL? Y ☐ N ☒	IF CODE, ANI REVIEW:

PROBLEM STATEMENT –(to be completed by QA or responsible department):

Contrary to PO requirement that the parts were to be interchangeable in fit form and function... as to those they are replacing, the actuator shafts would not function as delivered to the customer.

BELOW DESCRIBE THE CONDITION OR CIRCUMSTANCE VIOLATING THE ABOVE LISTED REQUIREMENT

ACKNOWLEDGEMENT OF RECEIPT OF THIS REQUEST (BUYER ACKNOWLEDGES EXTERNAL REQUESTS)	SIGNATURE/DATE Rebecca Blankenship 6/4/15

ROOT CAUSE AND PROPOSED ACTION (to be completed by responsible manager or designee)

Root Cause: The Actuator Shaft was sent outside for machining. After a discussion with our vendor it was determined that the drawing was unclear in regards to the required diameter in the area where the operating lug is located.

Proposed Action: Revise the current drawing to clearly identify the diameter requirements in the area where the operating lug is located.

ACTIONS WILL BE COMPLETED BY (DATE): 7/31/15	SIGNATURE/DATE Rebecca Blankenship 6/16/15

CORRECTIVE ACTION TAKEN TO PRECLUDE RECURRENCE: (attach evidence of actions taken)

Drawing has been revised to clearly show the requirements by using a cut out labeled Section A-A. See attached revision completed on 6/23/15. Part 21 Evaluation was performed and notification was performed with all parties. See attached.

SUBMITTED BY (printed name) Rebecca Blankenship	SIGNATURE AND DATE Rebecca Blankenship 7/29/15

CONFIRMATION OF CORRECTIVE ACTION TAKEN (To be completed by Flowserve QA after review of evidence)

EVIDENCE SUFFICIENT TO CLOSE? Y ☐ N ☐		FURTHER FOLLOW UP REQUIRED? Y ☐ N ☐
CORRECTIVE ACTION REVIEWED BY (QA Manager or Designee)	DATE	SIGNATURE

FORM Q-985 REV. 2

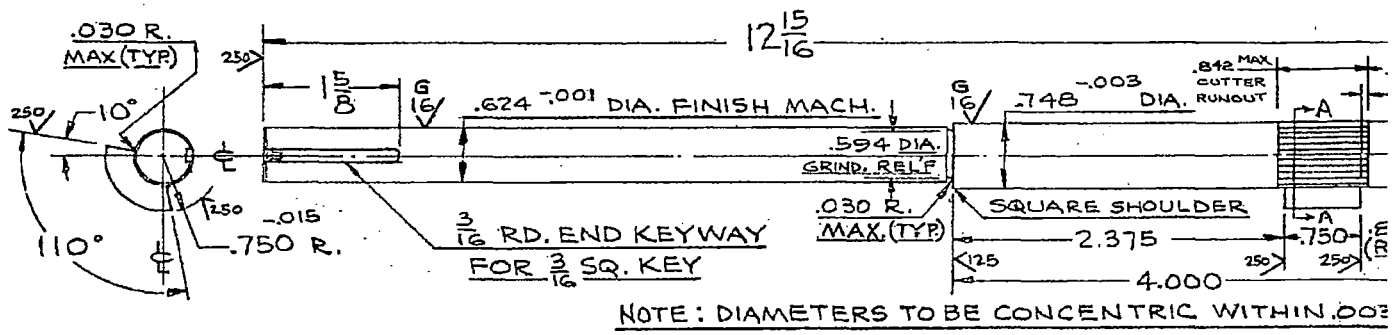

NOTE: DIAMETERS TO BE CONCENTRIC WITHIN .00

MILL OUT SEGMENTS IN 20° INCREMENTS WITH APPROX. 13 FLATS .130 WIDE × .006 DEEP USING 3/8 DIA. CUTTER WITH TOTAL RUNOUT TO .842 MAX. AS SHOWN. SURFACE FLUSH OR UNDER ADJACENT .748 DIA.

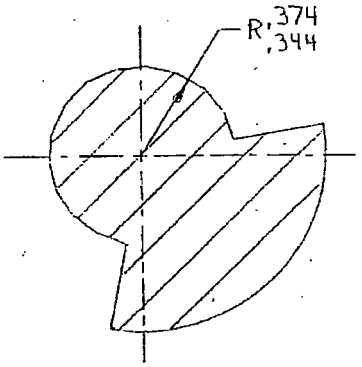

SECTION A-A

HAYWARD DWG: 6333-2-5

PL053-4

REV LTR	DRAWING C
	R
	ANCH

MACHINING TOLERANCES UNLESS OTHERWISE NOTED

DECIMAL: (3 Places).....±.005
DECIMAL: (2 Places).....±.02
FRACTION: 1/16 thru 1/2 ....±1/32
FRACTION: 33/64 thru 6.....±1/16
FRACTION: 6 1/64 thru 18 ...±1/8
FRACTION: above 18 .....±3/16

STANDARD FINISH ✓ = 250 ✓ RMS
BREAK ALL EDGES.....1/64 MIN.
FILLETS 1/64 MIN., ANGLES...±2°
~~DIAMETERS ON COMON ℄ TO BE CONCENTRIC WITHIN .010 T.I.R.~~

DWN BY:
CHK BY: F/ORD
APP'D BY:

04:39:40 p.m. 07-24-2013
Raleigh Marketing Nort
9198313376