Date: Wednesday, January 21, 2015 Time: 2:26:46 PM

TEST REPORT

Question file: ILT-09 NRC EXAM BANK

Copyright:

Test Date: 4/9/2015

Test Name: ILT-09 SRO NRC EXAM

Test Form: 0

Test Version: 0

Test Points: 100.00

Test File: ILT-09 SRO NRC EXAM

Test Path: O:\ILT 9\SENT TO NRC\2015 01 22 DRAFT Exam Submittal\LXR Files\ILT-09 SRO NRC EXAM.LXRTest

1. 201002K3.03 001/05401RMCS/001.010.A.04/NEW/SYS-B/BOTH/201002K3.03/2/2/H/3/ARB/ELJ

Unit 2 is performing a shutdown with reactor power at 13% RTP.

At 13:00, a FAILURE of the MASTER Timer occurs in the Reactor Manual Control System (RMCS).

- The MASTER Timer will NOT energize

At 13:30, a RWM "Insert" ROD BLOCK exists on the currently selected control rod.

- RMCS / RWM ROD BLOCK OR SYSTEM TROUBLE, (603-239) is ILLUMINATED

At 13:05, if the "Rod Movement Control" switch is placed to the "IN" position, the selected control rod _____ INSERT.

At 13:35, if the "Emergency In/Notch Override" switch is placed to the "Emergency In" position, RMCS _____ INSERT the selected control rod.

A. will;
will

B. will;
will NOT

C. will NOT;
will

D. ✓ will NOT;
will NOT

Description:

RMCS provides the electrical components and logic circuitry required to monitor and manipulate, in precise fashion, the control rods used in the Reactor Core. RMCS imposes the operating constraints (**rod blocks**) and permissives related to control rod movement that are appropriate to equipment conditions and the flux density at circumscribed regions about each control rod in the fuel matrix.

A rod is selected for movement by depressing a pushbutton for the desired rod on the reactor control bench board. The arrangement of control rod selection pushbuttons and circuitry permits the selection of only one control rod at a time for movement. The rod selection circuitry is arranged so that a rod selection is sustained until either another rod is selected or automatic action occurs which reverts the selection circuitry to a no-rod-selected condition. Once a rod has been selected, the direction for travel is determined by the Rod Movement Control Switch (RMCS). A rod insert signal is generated by placing the RMCS to the ROD IN position. Turning the RMCS to ROD IN and releasing (spring return to OFF) initiates the Master Timer if

there are no rod inhibit signals from the following:

a. **RWM Insert block**
b. Control Rod Withdraw signal present

The Master Timer energizes the appropriate buses in the required sequence for a rod insertion. Initiating movement of the selected rod prevents the selection of any other rod until the insert cycle of the selected rod is completed. The sequence involves energizing the Insert Bus (valves 121 & 123) for a preset amount of time. The Insert Bus is then automatically deenergized by energizing the Settle Bus (valve 120). The Settle Bus remains energized for a period of time to allow the control rod to settle into the next notch position.

The Rod Movement Control Switch spring returns to the "OFF" position. It indicates notch in and notch out cycles. If held in "NOTCH OUT" the rod will complete one notch out cycle and stop. If held in "ROD IN" position the rod will continuously insert until the switch is released or until a **RWM rod block** is initiated, or control rod is fully inserted.

The "EMERGENCY IN" position bypasses all the interlocks to insert the rod except the **RWM Insert blocks**. It directly energizes the directional control valves by bypassing the timer. It allows continuous rod motion inward with no settle function; water is forced past the seals in the CRD while settling into a notch.

With the Master Timer failure, RMCS will still prevent control rod movement if a **RWM insert block occurs**.

K/A JUSTIFICATION:

The second part of this question satisfies the K/A statement by asking the applicant to determine if RMCS will still process a control rod block using the EMERGENCY IN switch if a failure of RMCS occurs, which in this case is the Master Timer failing.

The "A" distractor is plausible if the applicant thinks about the operation of the "Rod Out/Notch Override" switch and remembers the "Emergency In"switch bypasses the Master Timer and directly energizes the Insert bus allowing control rod insertion. The second part is plausible if the applicant remembers that during the performance of 31EO-EOP-103 that ALL inward rod motion is not prohibited. This is allowed since the RWM is bypassed.

The "B" distractor is plausible if the applicant thinks about the operation of the "Rod Out/Notch Override" switch and remembers the "Emergency In"switch bypasses the Master Timer and directly energizes the Insert bus allowing control rod insertion. The second part is plausible since it is correct.

The "C" distractor is plausible since the first part is correct. The second part is plausible if the applicant remembers that during the performance of 31EO-EOP-103 that ALL inward rod motion is not prohibited. This is allowed since the RWM is bypassed.

A. **Incorrect** - See description above.

B. **Incorrect** - See description above.

C. **Incorrect** - See description above.

D. **Correct** - See description above.

References:
NONE

K/A:

201002 Reactor Manual Control System

K3. Knowledge of the effect that a loss or malfunction of the REACTOR MANUAL CONTROL SYSTEM will have on following: (CFR: 41.7 / 45.4)

K3.03 Ability to process rod block signals 2.9 3.0

LESSON PLAN/OBJECTIVE:

C11-RMCS-LP-05401, Reactor Manual Control System (RMCS), **Ver. 5.0**, EO 001.010.A.04 & EO 001.026.A.01

References used to develop this question:

34GO-OPS-065-0, Control Rod Movement, **Ver. 12.4**

2. 201003A1.02 001/00101C11/001.005.A.10/MOD/SYS-B/BOTH/201003A1.02/2/2/H/2/JSC/ELJ

Unit 2 is operating at 25% RTP while performing a Reactor Startup. The next reactivity manipulation is to withdraw control rods in the selected rod group from position 12 to 20. The OATC observes the following indications:

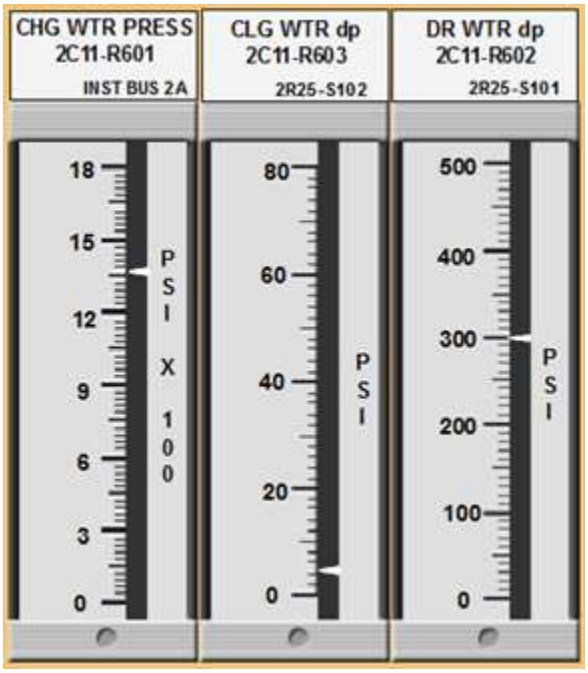

Based on the above conditions,

If a Control Rod is moved, the Control Rod will travel at _____ speed.

Placing the control switch for 2C11-F003, Drive Press Cntl Valve, to OPEN for one (1) second will cause Drive Water dp, 2C11-R602, indication to _____ .

A. ✓ faster than NORMAL;
lower

B. faster than NORMAL;
rise

C. NORMAL;
lower

D. NORMAL;
rise

Description:

Normal Drive water differential pressure is maintained 220-280 psid IAW 34SO-C11-005-2 in order to maintain rod speeds constant. Drive water dp is based on the differential between CRD pressure and RPV pressure. Drive water is used to insert or withdraw control rods. Drive water is applied to the CRDM piston area therefore the higher the differential pressure the faster the

control rod speeds will be. Drive water dp is controlled by positioning 2C11-F003 from H11-P603. To increase dp, the operator has to take 2C11-F003 control switch to the close position. To lower dp, the operator has to take 2C11-F003 control switch to the open position.

IAW 334AB-C11-003-2, Caution 1 states:

OPERATIONS MANAGEMENT APPROVAL IS REQUIRED PRIOR TO INCREASING DRIVE WATER PRESSURE ABOVE 350 PSID FOR CONTROL RODS WHICH ARE NOT FULLY INSERTED.

K/A JUSTIFICATION:

This question satisfies the K/A statement by requiring the applicant to predict how the CRD drive water DP affects rod speeds.

The "B" distractor is plausible since the first part is correct. The second part is plausible if the applicant thinks differential pressure is maintained for drive flow and is measured downstream of 2C11-F003. In this case, opening 2C11-F003 will direct more flow/pressure causing Drive water dp to rise.

The "C" distractor is plausible if the applicant thinks that normal drive water dp ranges up to 350 psid since this differential pressure is used in 34AB-C11-003-2, Inability to Move a Control Rod, for freeing a control rod. During the performance of this abonormal, Operations Management permission is required increase differntial pressure above 350 psid. The normal range for drive water d/p is 220-280 psid. The second part is plausible since it is correct.

The "D" distractor is plausibleif the applicant thinks that normal drive water dp ranges up to 350 psid since this differential pressure is used in 34AB-C11-003-2, Inability to Move a Control Rod, for freeing a control rod. During the performance of this abonormal, Operations Management permission is required increase differntial pressure above 350 psid. The normal range for drive water d/p is 220-280 psid. The second part is plausible if the applicant thinks differential pressure is maintained for drive flow and is measured downstream of 2C11-F003. In this case, opening 2C11-F003 will direct more flow/pressure causing Drive water dp to rise.

A. **Correct** - See description above.

B. **Incorrect** - See description above.

C. **Incorrect** - See description above.

D. **Incorrect** - See description above.

References:
NONE

K/A:

201003 Control Rod and Drive Mechanism

A1. Ability to predict and/or monitor changes in parameters associated with operating the CONTROL ROD AND DRIVE MECHANISM controls including: (CFR: 41.5 / 45.5)

A1.02 CRD drive pressure 2.8 2.8

LESSON PLAN/OBJECTIVE:

C11-CRD-LP-00101, Control Rod Drive System, **Ver 8.0**, EO 001.005.A.10

References used to develop this question:

34SO-C11-005-2, Control Rod Drive Hydraulic System, **Ver 32.0**
34AB-C11-003-2, Inability to Move a Control Rod, **Ver 10.1**

Modified from HLT Database Q#201001A1.03-001

Original Question

The **Unit 2** CRD system is being started per 34SO-C11-005-2, "Control Rod Drive Hydraulic System", with the following plant conditions:

- "2A" CRD pump.....Running
- 2C11-F002A, FCV.....AUTO
- CRD system flow.....50 gpm
- 2C11-F003, Drive Press Cntl Valve.....Full OPEN

Which ONE of the choices below completes the following statement?

As the operator throttles 2C11-F003 in the CLOSED direction, the Drive Water dP will _____; and, 2C11-F002A, FCV, will throttle _____.

A. decrease;
open

B. decrease;
closed

C.✓ increase;
open

D. increase;
closed

3. 201006A1.03 001/05403RWM/H-OP-90000.003/NEW/SYS-I/BOTH/201006A1.03/2/2/F/2/ARB/ELJ

Unit 2 is starting up with the following conditions:

- o Reactor power is 3.5 % RTP
- o Control Rod density equals 60%
- o The currently "Latched" rod step (step 12) has an Insert limit of 24 and a Withdraw limit of 48
- o All Control rods in the currently "Latched" step are at position 48
- o Step 13 Control rods are at position 00

The RWM "Display" will FIRST indicate that Step 13 is "Latched" when the _____ .

After RWM is "Latched" to Step 13, ALL of the Control rods "Latched" in this step will be indicated _____ .

A. first Control rod in step 13 is selected;
on the "List Rods" display of RWM

B.✔ first Control rod in step 13 is selected;
by backlighting on the Control Rod Select Matrix

C. last Control rod in step 12 reached position 48;
on the "List Rods" display of RWM

D. last Control rod in step 12 reached position 48;
by backlighting on the Control Rod Select Matrix

Description:

Rod Selection Matrix (RSM),

The RSM contains 137 pushbuttons, corresponding to the 137 control rods, used by the operator to select a control rod to be moved. Each pushbutton contains backlights which will illuminate brightly if that pushbutton is selected by the operator and pushed. If **greater than 50% rod** density, it will dimly illuminate if that pushbutton is part of the **selected** rod group, or not at all if there is a rod select inhibit associated with that control rod. If less than 50% rod density, once a pushbutton of a control rod group is selected and pushed, that particular pushbutton will backlight brightly and the rest of the pushbuttons belonging to the group will not backlight until the selected rod in the group is moved one notch away from the other rods. This will cause the rest of the group to dimly backlight. When all rods in the group are at the same position, the dimly lit pushbuttons will extinguish. In either condition, since only one rod may be selected at a time, only one pushbutton will be backlighted brightly in a group.

RWM evaluates all control rod positions to determine the current rod step, per the prescribed rod sequence, ten times a second. This evaluation is used to determine the "Latched" Step. The Latched Step is the group of rods that contain the rod that is currently being or has just been

moved per the prescribed sequence. When all the rods in a currently latched step are at their withdraw (insert if shutting down) limit, the RWM will latch into the next higher (lower if shutting down) step when the **first rod in the next step is selected**. An example would be: Rods are being withdrawn in Step 6. When all the rods in step 6 are at their withdraw limit, RWM will still show Step 6 as the Latched Step (this is the step number on the RWM display). As soon as a Step 7 rod is selected, the Step number on the display will change to 7, and the Latched Step will be 7. This is true unless the rods in the higher step are the same rods in the current step, i.e. the rods in Step 4 that are moved from position 04 to 08 are the same rods as in Step 3 that were moved from 00 to 04 (BPWS). If this is the case, the Step Number display will not change until the first rod in the higher step is moved, i.e. the first rod in Step 4 from the previous example is withdrawn past position 04.

"ALL RODS IN" is determined by all rods being at or inserted past position "00". If all rods are fully inserted then ALL RODS IN: YES is displayed. If all rods are not full in then ALL RODS IN: NO and RODS NOT FULL-IN: # (number of rods not full-in) will be displayed. A **LIST RODS** softkey will then be available to determine which rods are not full-in and their position. If more than 16 rods are not full-in, then the softkeys NEXT PAGE and PREVIOUS PAGE will be available to view the remainder of the rods not full-in. These displays will not update automatically as the rod's current position changes.

K/A JUSTIFICATION:

This question satisfies the K/A statement by requiring the applicant to use RWM and specific plant conditions to determine the "Latched" Group.

The "A" distractor is plausible since the first part is correct. The second part is plausible if the applicant remembers that the "List Rods" function will indicate all of the control rods that are not full-in and does not recognize Step 13 Control rods are at position 00. Since Step 13 Control rods are full-in, they will not be displayed on the "List Rods" screen.

The "C" distractor is plausible if the applicant remembers that a withdraw block will occur when position 48 is reached and thinks since all the rods in the current group are now at their withdraw position that RWM will then transition to the next step of control rods to be withdrawn. The second part is plausible if the applicant remembers that the "List Rods" function will indicate all of the control rods that are not full-in and does not recognize Step 13 Control rods are at position 00. Since Step 13 Control rods are full-in, they will not be displayed on the "List Rods" screen.

The "D" distractor is plausible if the applicant remembers that a withdraw block will occur when position 48 is reached and thinks since all the rods in the current group are now at their withdraw position that RWM will then transition to the next step of control rods to be withdrawn. The second part is plausible since it is correct.

A. **Incorrect** - See description above.

B. **Correct** - See description above.

C. **Incorrect** - See description above.

D. **Incorrect** - See description above.

References:
NONE

K/A:

201006 Rod Worth Minimizer System (RWM) (Plant Specific)

A1. Ability to predict and/or monitor changes in parameters associated with operating the ROD WORTH MINIMIZER SYSTEM (RWM) (PLANT SPECIFIC) controls including: (CFR: 41.5 / 45.5)

A1.03 Latched group indication: P-Spec (Not-BWR6) 2.9 3.0

LESSON PLAN/OBJECTIVE:

C11-RWM-LP-05403, Rod Worth Minimizer, **Ver. 6.2**, H-OP-90000.003

References used to develop this question:

34GO-OPS-065-0, Control Rod Movement, **Ver. 12.4**

4. 203000A2.14 001/00701E11/006.005.A.01/MOD/SYS-I/BOTH/203000A2.14/2/1/H/2/ARB/ELJ

Unit 2 is operating at 25% RTP with the following alarm status:

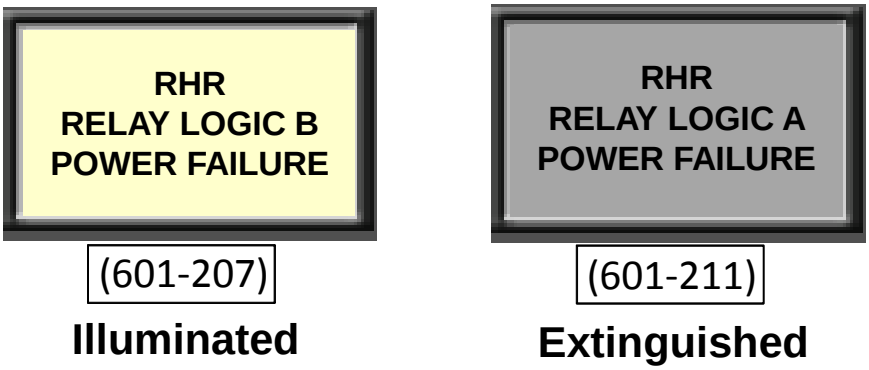

Subsequently, an event occurs resulting in the following conditions:

- o Drywell pressure to stabilize at 4.5 psig
- o RPV pressure decreases to 160 psig

With the current status of the above alarms and plant conditions,

RHR pumps 2B & 2D _____ .

IAW 34AR-601-207-2, RHR Relay Logic B Power Failure, the NPO will confirm Circuit breaker #4 on _____ , is in the CLOSED position.

A. must be manually started;
2R25-S002, 125 VDC Distribution Cabinet 2B

B. must be manually started;
2R25-S006, 125 VDC Distribution Cabinet 2F

C. ✓ will automatically start;
2R25-S002, 125 VDC Distribution Cabinet 2B

D. will automatically start;
2R25-S006, 125 VDC Distribution Cabinet 2F

Description:

Control power for RHR pumps "A" & "D" are in Electrical Division 1 (2R25-S004) with control power for RHR pumps "B" & "C" in Electrical Division 2 (2R25-S006) . If either Division 1 or 2 Control power is lost then the respective two (2) RHR pumps will not have control power for operation of the breaker closure.

Initiation Logic "A" is operated from 2R25-S001, 125 VDC Bus "A" and Initiation Logic "B" is operated from 2R25-S002, 125 VDC Bus "B". If 2R25-S001 or 2R25-S002 fail prior to a LOCA signal being received, then either Div I or Div II logic, will de-energize. If a LOCA signal is then received, the division with power still available will start **ALL** RHR pumps in both Div I

The RHR pumps will initiate from either divisions logic on:

Low Reactor Water Level	-101 inches
High Drywell Pressure	1.85 psig

IAW 34SO-E11-010-2, RHR System, contains the following steps explaining logic power to the RHR pumps:

2.2 Restarting an RHR pump following abnormal conditions affected by anti-pump logic and DCR 98-011 (4160V Breaker Operability Indication):

2.2.1 An auto initiation signal is present and then the pump is manually TRIPPED:

- o The operator is alerted by illumination of the white start disagreement light above the secured pump control switch. This white light remains sealed in illuminated until:
  - The initiation signal clears and is reset.
  OR
  - Power is removed from the applicable 4160V bus.
  OR
  - DC logic power is lost.

- o "The operator **can manually restart the pump** using the control switch (as long as DC logic power OR 4160V bus power has not been lost).

- o "The pump will auto start if the initiation signal clears, is reset, and a subsequent initiation signal occurs.

- o "The pump will auto start if a loss of relay logic power occurs for the division associated with the secured pump (Division I for A and D pumps, Division II for B and C pumps) AND an initiation signal is still present from the opposite division relay logic.

- o "Loss of the opposite division relay logic power does not affect the ability to start/stop the pump with the control switch.

2.2.2 A loss of associated relay logic power exists AND an auto initiation signal is present, and then the pump is manually TRIPPED:

The breaker will TRIP using the control switch.

The white start disagreement light above the control switch will NOT illuminate due to loss of relay logic power.

The green breaker open/pump stopped indicating light will NOT illuminate due to the breaker anti-pump feature being activated because the breaker close signal is still present from the other division relay logic.

To restart the pump, the pump restart pushbutton must be depressed AND held until the green breaker open/pump stopped light illuminates. This removes the breaker close signal from the opposite division and allows the breaker to recharge. When the green light is illuminated, the push button can be released and the pump will restart from the opposite division start signal.

2.2.3 The pump has been manually TRIPPED and then a loss of associated relay logic power occurs:

The green breaker open/pump stopped light is illuminated.

The pump can be started with the control switch.

2.2.4 The pump has been manually TRIPPED, and a loss of associated relay logic power has occurred, and then an initiation signal is received.

The pump will start upon receipt of an automatic initiation signal.

K/A JUSTIFICATION:

This question satisfies the K/A statement by requiring the applicant to predict the impact on RHR pumps (manual start versus auto start) with the failure of Division B initiation logic and then use 34AR-601-207-2 to determine which cabinet power supply must be investigated for the associated power failure.

The "A" distractor is plausible if the applicant thinks about the control power logic instead of the initiation logic and since Div II initiation logic is lost, thinks RHR 2B & 2D must be manually started. This would also be true if an initiation signal is present, the initiation logic is then lost and then the RHR pump is secured, resulting in the RHR pump not auto starting and must be manually started. The second part is plausible since it is correct.

The "B" distractor is plausible if the applicant thinks about the control power logic instead of the initiation logic and since Div II initiation logic is lost, thinks RHR 2B & 2D must be manually started. This would also be true if an initiation signal is present, the initiation logic is then lost and then the RHR pump is secured, resulting in the RHR pump not auto starting and must be manually started. The second part is plausible since this power supply provides control power for RHR 2C, PSW 2D, and CRD 2B, and the applicant can think this is the initiation logic power supply.

The "D" distractor is plausible since the first part is correct. The second part is plausible since this power supply provides control power for RHR 2C, PSW 2D, and CRD 2B, and the applicant can think this is the initiation logic power supply.

A. **Incorrect** - See description above.

B. **Incorrect** - See description above.

C. **Correct** - See description above.

D. **Incorrect** - See description above.

References:
NONE

K/A:

203000 RHR/LPCI: Injection Mode (Plant Specific)

A2. Ability to (a) predict the impacts of the following on the RHR/LPCI: INJECTION MODE (PLANT SPECIFIC) ; and (b) based on those predictions, use procedures to correct, control, or mitigate the consequences of those abnormal conditions or operations: (CFR: 41.5 / 45.6)

A2.14 Initiating logic failure 3.8 3.9*

REPLACED THE BELOW K/A AFTER PHONE CONVERSATION WITH CHIEF EXAMINER PHIL CAPEHART ON 3/27/2014.

A2. Ability to (a) predict the impacts of the following on the RHR/LPCI: INJECTION MODE (PLANT SPECIFIC) ; and (b) based on those predictions, use procedures to correct, control, or mitigate the consequences of those abnormal conditions or operations: (CFR: 41.5 / 45.6)

A2.15 Loop selection logic failure: Plant-Specific 4.2* 4.2*

LESSON PLAN/OBJECTIVE:

E11-RHR-LP-00701, Residual Heat Removal System, **Ver. 7.0**, EO 006.005.A.01 &
EO 006.007.A.02

References used to develop this question:

34AB-R22-001-2, Loss Of DC Buses, **Ver. 4.3**
34AR-601-207-2, RHR Relay Logic B Power Failure, **Ver. 2.2**
34SO-E11-010-2, RHR System, **Ver. 40.4**
Modified from HLT Database Q#209001K3.03-002

Original Question

Unit 2 was operating at 25% RTP when an event occurs causing Drywell pressure to stabilize at 4.5 psig.

An NPO reports the status of the following alarms:

(601-107)	(601-310)
Illuminated	**Extinguished**

With the current status of the above alarms, _____ will be operating and

The 2C EDG frequency indication will be _____ .

A. ONLY one (1) Core Spray pump;
approximately 60 Hz

B. ONLY one (1) Core Spray pump;
greater than 65 Hz

C.✓ BOTH Core Spray pumps;
approximately 60 Hz

D. BOTH Core Spray pumps;
greater than 65 Hz

5. 205000K3.02 001/03401E11/034.002.A.10/MOD/SYS-B/BOTH/205000K3.02/2/1/F/2/ARB/ELJ

Unit 1 is in Mode 4 with RHR Loop B Shutdown Cooling in service.

The following conditions exist:

- o Recirculation Pumps ..... Secured

- o RHR B Pump flow ..... 7700 gpm
- o All other RHR Pumps ..... Standby

Subsequently, a tube rupture occurs in RHR Heat Exchanger 1B.

With the above conditions and NO operator actions,

RWL will start _____ .

IAW 34SO-E11-010-1, RHR System, the MINIMUM listed RHR to RHRSW differential pressure allowed is _____ .

A.✓ going up;
21 psid

B. going up;
31 psid

C. lowering;
21 psid

D. lowering;
31 psid

Description:

Each heat exchanger is a vertical, U tube, single pass heat exchanger. There are two heat exchangers, one per RHR loop. The heat exchangers capacity is based on the most severe mode of operation, which is the SDC mode. It is designed to maintain reactor temperature less than or equal to 125°F, 20 hrs after all rods are fully inserted.
In order to prevent leakage from the RHR system into the RHRSW system, tube side pressure in the heat exchanger is maintained higher than shell side pressure. The differential pressure is maintained by controlling the position of 1E11-F068A/B.
If RHR **(shell side)** pressure was greater than RHRSW (**inside tubes**) pressure and a tube leak existed, a possible radioactive release to the environment could occur (RHRSW discharge flow is directed to the flume).
34SO-E11-010 directs placing the INTERLOCK OVERRIDE keylock switch for 1E11-F068A/B to the override position prior to starting the RHRSW pump in its respective loop. This action overrides the 30 psi interlock on valve F068A/B, thus allowing opening the F068A/B valve prior to starting a RHRSW pump. After the pump is started, immediately return the keylock switch to its normal position. With the keylock switch in normal, 1E11-F068A/B will isolate should the running RHRSW pump trip. When placing the RHRSW system in operation, the tube

side heat exchanger outlet valve (F068A/B) is used to manually control RHRSW pressure higher than RHR pressure by **at least 20 psig**.

A RHRSW (tube) side leak will cause RWL to go up since RHR is taking a suction off the RPV and discharging back to the RPV but now with RHRSW leaking into the shell side. If RHR was inside the tube, the leak would be flowing from RHR to the shell side causing RWL to start going down.

K/A JUSTIFICATION:

This question satisfies the K/A statement by asking the applicant the effect that a malfunction of SDC (tube leak) will have on RWL. In this question, the effect on RWL is that with the SDC tube leak, RWL will start going up from its current value. If RHR was inside the tube, the leak would be flowing from RHR to the shell side causing RWL to start going down.

The "B" distractor is plausible since the first part is correct. The second part is plausible if the applicant thinks about the 30 psig limit vice the 20 psid limit. Would also be correct if asking about the 30 psig limit for F068 closure.

The "C" distractor is plausible if the applicant thinks the high pressure side of the heat exchanger is on the RHR side therefore RWL would lower due to leaking to the RHRSW side. The second part is plausible since it is correct.

The "D" distractor is plausible if the applicant thinks the high pressure side of the heat exchanger is on the RHR side therefore RWL would lower due to leaking to the RHRSW side. The second part is plausible if the applicant thinks about the 30 psig limit vice the 20 psid limit. Would also be correct if asking about the 30 psig limit for F068 closure.

A. **Correct** - See description above.

B. **Incorrect** - See description above.

C. **Incorrect** - See description above.

D. **Incorrect** - See description above.

References:
NONE

K/A:

205000 Shutdown Cooling System (RHR Shutdown Cooling Mode)

K3. Knowledge of the effect that a loss or malfunction of the SHUTDOWN COOLING SYSTEM (RHR SHUTDOWN COOLING MODE) will have on following: (CFR: 41.7 / 45.4)

K3.02 Reactor water level: Plant-Specific 3.2 3.3

LESSON PLAN/OBJECTIVE:

E11-RHRSW-LP-03401, Residual Heat Removal Service Water System (RHRSW), **Ver. 5.0**, EO 034.002.A.10

References used to develop this question:

34SO-E11-010-1, "Residual Heat Removal System", **Ver. 44.1**

Modified from HLT Database Q#LT-034002-017

Original Question

A MINIMUM RHR to RHRSW differential pressure of _____ is procedurally required to be maintained to ensure that any RHR Heat Exchanger leaks result in the leaking water going into the _____ system.

A. 8 psid;
RHR

B. 8 psid;
RHRSW

C.✓ 20 psid;
RHR

D. 20 psid;
RHRSW

6. 206000A1.04 001/00501E41/005.002.A.03/NEW/SYS-B/BOTH/206000A1.04/2/1/F/2/JSC/ELJ

Unit 2 was operating at 100% RTP when a spurious scram occurred.

RPV pressure control has been transferred to the HPCI System due to the MSIVs being manually closed.

IAW 34SO-E41-001-2, HPCI System, HPCI is operating in the Pressure Control Mode at the following times with the associated flows and 2E41-F008, Test To CST Valve, positions:

Time	**HPCI flow**	**2E41-F008**
10:00	Rated gpm	75% open
10:20	Rated gpm	25% open

Based on the above conditions;

The HIGHEST rate of Torus water level increase will be occurring at _____ .

If Torus water level reaches 151 inches, HPCI will be operating _____ .

A. 10:00;
on MINIMUM flow

B. 10:00;
at RATED flow

C. 10:20;
on MINIMUM flow

D.✓ 10:20;
at RATED flow

Description:

With HPCI in the pressure control mode, the amount of exhaust to the suppression pool depends on how much work the HPCI turbine is performing. Since the flow is set at rated, the amount of work is inversely proportional to the F008 position. If F008 is throttled in close direction, the turbine will have to work harder to maintain rated flow since the flow path is being restricted. The turbine will have to increase speed to maintain flow therefore more steam is being exhausted to the suppression pool. The more steam that is exhausted means the level will rise at a faster rate. HPCI Suppression Pool Suction Isolation Valves F041 and F042, isolate the Suppression Pool from the HPCI system. They also provide an automatic transfer of the HPCI pump suction source from the CST to the Suppression Pool. The automatic suction swap will occur when the CST lowers to < 34 inches or the Suppression pool increases to 152 inches.
When either of the above conditions are met, the Suppression Pool Valves F041 and F042 will receive an open signal. When BOTH of these valves are full open, the CST Suction Valve F004 will receive a close signal. This ensures a suction path is maintained for the HPCI pump and prevents draining the CST to the Suppression Pool. 2E41-F008 and F011, Test to CST valves, will receive a close signal when either HPCI Suppression Pool Suction Isolation Valves F041 and F042 are fully open.

K/A JUSTIFICATION:

This question satisfies the K/A statement by requiring the applicant to predict/monitor changes in the suppression pool level based upon the increase in HPCI exhaust.

The "A" distractor is plausible if the applicant thinks about the operation of 2E41-F008. The opening of a valve in a system would usually mean more flow (work) however the Turbine is in automatic control. If HPCI was in manual mode with the F008 opened more (75% vice 25%), the turbine would be performing more work thus level would be increasing faster. The second part is plausible if the applicant thinks about the RCIC system setpt (150.5 inches) instead of the HPCI system setpt (152 inches). If the applicant thinks about the RCIC setpt, the HPCI system would shift suction sources and the test valves (F008/F011) would close causing HPCI to be on minimum flow.

The "B" distractor is plausible if the applicant thinks about the operation of 2E41-F008. The opening of a valve in a system would usually mean more flow (work) however the Turbine is in automatic control. If HPCI was in manual mode with the F008 opened more (75% vice 25%), the turbine would be performing more work thus level would be increasing faster. The second part is plausible since it is correct.

The "C" distractor is plausible since the first part is correct.The second part is plausible if the applicant thinks about the RCIC system setpt (150.5 inches) instead of the HPCI system setpt (152 inches). If the applicant thinks about the RCIC setpt, the HPCI system would shift suction sources and the test valves (F008/F011) would close causing HPCI to be on minimum flow.

A. **Incorrect** - See description above.

B. **Incorrect** - See description above.

C. **Incorrect** - See description above.

D. **Correct** - See description above.

References:
NONE

K/A:

206000 High Pressure Coolant Injection System

A1. Ability to predict and/or monitor changes in parameters associated with operating the HIGH PRESSURE COOLANT INJECTION SYSTEM controls including:
(CFR: 41.5 / 45.5)

A1.04 Suppression pool level: BWR-2,3,4 . . . . . 3.7 3.8

LESSON PLAN/OBJECTIVE:

E41-HPCI-LP-00501, High Pressure Coolant Injection (HPCI), **Ver 6.0**, EO 005.002.A.03

References used to develop this question:

34SO-E41-001-2, High Pressure Coolant Injection (HPCI) System, **Ver 28.3**

7. 206000A4.03 001/00501E41/005.003.A.04/MOD/SYS-B/BOTH/206000A4.03/2/1/F/3/ARB/ELJ

The **Unit 2** HPCI system was manually placed in service following a Feedwater transient.

The following conditions exist:

- o RWL ..... 38 inches (lowest level reached -15 inches)
- o RPV Pressure ..... 920 psig
- o Drywell pressure ..... 0.5 psig (highest pressure reached 0.6 psig)
- o HPCI Bearing temperatures are steadily increasing

The SRO directs the NPO to monitor HPCI Bearing temperatures.

With the above conditions and IAW 34SO-E41-001-2, High Pressure Coolant Injection (HPCI) System,

When HPCI was started, 2E41-F059, Lube Oil Clg Wtr valve, _____ opened.

The NPO will monitor HPCI Bearing temperatures on Panel, _____ .

A. was manually;
2H11-P700

B.✔ was manually;
2H11-P614

C. automatically;
2H11-P700

D. automatically;
2H11-P614

Description:

HPCI Bearing temperatures are monitored on recorder 2E41-R605 on panel **2H11-P614** in the Main Control Room. 2H11-P700 panel, also located in the Main Control Room, is where HPCI parameters such as HPCI Area Coolers can be monitored.

IAW 34SO-E41-001-2, High Pressure Coolant Injection (HPCI) System
7.2.2 <u>Control Room Manual Startup</u>
7.2.2.1 IF required, depress the High Water Level Reset Pushbutton, 2H11-P601.
<u>7.2.2.2 Open 2E41-F059, Lube Oil Clg Wtr Valve.</u>
7.2.2.3 Start 2E41-C002-2, Barom Cndsr Vacuum Pump.
7.2.2.4 Confirm the necessary locations are posted as High Radiation areas, except in an emergency situation.
7.2.2.5 Perform wing steps, 7.2.2.5.1 AND 7.2.2.5.2, in rapid succession:
7.2.2.5.1 Place 2E41-F001, Turb Steam Supply Valve, control switch, to Open, AND

VERIFY the red light illuminates.

7.2.2.5.2 Take 2E41-C002-3, Aux Oil Pump, control switch, to the START position.

7.2.2.6 Open 2E41-F006, Pump Discharge Valve.

7.2.2.7 Confirm the following valves OPEN:

Turbine Control Valve

Turbine Stop Valve

7.2.2.8 Confirm the turbine comes up to speed as directed by 2E41-R612, Flow Control.

7.2.2.9 WHEN flow increases to 790 gpm, confirm 2E41-F012, Min Flow Valve, CLOSED.

7.2.2.10 Confirm closed OR close the following valves:

2E41-F028, Steam Line Drain Valve

2E41-F025, Barom Cndsr Disch To CRW

2E41-F029, Steam Line Drain Valve

2E41-F026, Barom Cndsr Disch To CRW

K/A JUSTIFICATION:

This question satisfies the K/A statement by requiring the applicant to know in the control room where to monitor HPCI Turbine/Bearing temperatures.

The "A" distractor is plausible since the first part is correct. The second part is plausible if the applicant remembers there are HPCI System temperatures located on this panel and thinking this is where Turbine/Bearing temperatures are monitored.

The "C" distractor is plausible if the applicant thinks about the manual startup of RCIC where the manual initiation pushbutton is depressed which then starts up RCIC automatically. The operator then confirms the automatic startup of RCIC. The HPCI system does not have a manual initiation pushbutton, therefore the operator has to perform all actions manually to include the opening of E11-F059. The second part is plausible if the applicant remembers there are HPCI System temperatures located on this panel and thinking this is where Turbine/Bearing temperatures are monitored.

The "D" distractor is plausible if the applicant thinks about the manual startup of RCIC where the manual initiation pushbutton is depressed which then starts up RCIC automatically. The operator then confirms the automatic startup of RCIC. The HPCI system does not have a manual initiation pushbutton, therefore the operator has to perform all actions manually to include the opening of E11-F059. The second part is plausible since it is correct.

A. **Incorrect** - See description above.

B. **Correct** - See description above.

C. **Incorrect** - See description above.

D. **Incorrect** - See description above.

References:
NONE

K/A:

206000 High Pressure Coolant Injection System

A4. Ability to manually operate and/or monitor in the control room:
(CFR: 41.7 / 45.5 to 45.8)

A4.03 Turbine temperatures: BWR-2, 3,4 . . . . . 3.1 3.0

LESSON PLAN/OBJECTIVE:

E41-HPCI-LP-00501, High Pressure Coolant Injection (HPCI), **Ver. 6.0**, EO 005.003.A.04

References used to develop this question:

34SO-E41-001-2, High Pressure Coolant Injection (HPCI) System, **Ver. 28.3**

8. 209001K2.01 001/00801E21/008.001.A.01/MOD/SYS-B/BOTH/209001K2.01/2/1/F/2/ARB/ELJ

Which ONE of the choices below completes the following statements?

The power supply for the 2A Core Spray pump is _____ .

The power supply for the 2B Core Spray pump is _____ .

A. 4160V 2E, 2R22-S005;
4160V 2F, 2R22-S006

B.✔ 4160V 2E, 2R22-S005;
4160V 2G, 2R22-S007

C. 4160V 2F, 2R22-S006;
4160V 2E, 2R22-S005

D. 4160V 2F, 2R22-S006;
4160V 2G, 2R22-S007

Description:

The following Table 1 of R22-ELECT-LP-02702 lists the pumps powered from each 4160V Emergency Bus:

4160V Bus 2E (2R22-S005)

2A PSW Pump
2A RHR Pump
2A CRD Pump
2A Core Spray Pump
2A RHRSW Pump
2A Drywell Chiller Motor

4160V Bus 2F (2R22-S006)

2C PSW Pump
2D PSW Pump
2C RHR Pump
2D RHR Pump
2C RHRSW Pump
2B CRD Pump

4160V Bus 2G (2R22-S007)

2B PSW Pump
2B RHR Pump
2B Core Spray Pump
2B RHRSW Pump
2D RHRSW Pump
2B Drywell Chiller Motor

The power supply for Core Spray pump 2A is 4160V 2E & for 2B is 4160V 2G.

K/A JUSTIFICATION:

This question satisfies the K/A statement by requiring the applicant to know the power supply to Core Spray pump 2A (4160V 2E) & 2B (4160V 2G).

The "A" distractor is plausible since the first part is correct. The second part is plausible if the applicant remembers there is a combination of "A" & "B" pumps that are powered by 4160V "E" & "F" (CRD pumps "A" & "B") and thinks the Core Spay pumps are powered by this arrangement.

The "C" distractor is plausible if the applicant remembers that Core Spray 2A is powered by an Emergency Bus but does not remember which one and thinks this is the power supply for Core Spray 2A. The second part is plausible if the applicant remembers there is a Core Spray pump powered from this bus and thinks it is Core Spray 2B.

The "D" distractor is plausible if the applicant remembers that Core Spray 2A is powered by an Emergency Bus but does not remember which one and thinks Core Spray 2A is powered by this bus. The second part is plausible since it is correct.

A. **Incorrect** - See description above.

B. **Correct** - See description above.

C. **Incorrect** - See description above.

D. **Incorrect** - See description above.

References:
NONE

K/A:

209001 Low Pressure Core Spray System

K2. Knowledge of electrical power supplies to the following:
(CFR: 41.7)

K2.01 Pump power 3.0* 3.1*

LESSON PLAN/OBJECTIVE:

E21-CS-LP-00801, Core Spray System, **Ver. 5.0**, EO 008.001.A.01

References used to develop this question:

34SO-E21-001-2, Core Spray System, Attachment 2 Page 3 of 3, **Ver. 24.0**

Modified from HLT Database Q#295003AK1.04-002

Original Question

A concurrent LOSP and LOCA occurs on **Unit 1**.

- o 4160 VAC "1E" AND "1F" are DE-ENERGIZED and can NOT be recovered.
- o 4160 VAC "1G" is powered from it's associated EDG.

Which of the choices below lists the pumps that are available for injection, if needed?

A. "1A" RHR, "1A" Core Spray, "1A" CRD

B. "1C" RHR, "1C" RHRSW, "1B" CRD

C.✓ "1B" RHR, "1B" Core Spray, "1B" RHRSW

D. "1D" RHR, "1C" PSW, "1D" PSW

9. 211000K1.05 001/01101C41/011.002.A.04/MOD/SYS-B/BOTH/211000K1.05/2/1/F/2/ARB/ELJ

Unit 1 was at 100% RTP when a reactor scram occurred.

- Several control rods did NOT insert (ATWS)
- Boron injection is required
- RWL is 9 inches (lowest RWL reached -5 inches)

On Panel 1H11-P603, the SBLC Pump Select switch is placed in the Start Sys "A" position.

With the above conditions,

1G31-F001, RWCU Isolation valve, will _____ .

1G31-F004, RWCU Isolation valve, will _____ .

A. remain in the open position;
remain in the open position

B.✔ remain in the open position;
have received an isolation signal

C. have received an isolation signal;
remain in the open position

D. have received an isolation signal;
have received an isolation signal

Description:

Primary control of the SBLC system is by a brass keylock switch which manually activates either pump and both squib valves. The switch is located on Control Room panel H11-P603. When this switch is positioned to actuate either SBLC systems, a Reactor Water Clean-Up System Isolation will also be initiated to prevent the removal of the SBLC solution by the filter demin.

Reactor Water Cleanup System Outboard Containment Isolation Valve (**G31-F004**) is interlocked to the SBLC system to close upon initiation of SBLC. This feature is designed to ensure that the SBLC solution enters the RPV and does not enter the RWCU system where the removal of boron would occur when it is needed to shutdown the reactor. The closure of the RWCU suction valve will trip the RWCU pump.

K/A JUSTIFICATION:

This question satisfies the K/A statement by requiring the applicant to determine the **effect** on the RWCU System (1G31-F004 closing) when initiating the SBLC System.

The "A" distractor is plausible if the applicant remembers there is a time when RWCU isolation will not isolate when SBLC is initiated (Local) and thinks both RWCU valves will remain open. The second part is plausible if the applicant remembers there is a time when RWCU isolation will not isolate when SBLC is initiated (Local) and thinks both RWCU valves will remain open.

The "C" distractor is plausible if the applicant remembers there is one RWCU isolation valve that will isolate on SBLC initiation and thinks it is the 1G31-F001. The second part is plausible if the applicant remembers there is a time when RWCU isolation will not isolate (Local) when SBLC is initiated and thinks this RWCU valve will remain open.

The "D" distractor is plausible if the applicant remembers BOTH valves will isolate on any of the following signals: Low RWL, High Differential Flow, High Area Temperature, or High Area Differential Temperature. The second part is plausible since it is correct.

A. **Incorrect** - See description above.

B. **Correct** - See description above.

C. **Incorrect** - See description above.

D. **Incorrect** - See description above.

References:
NONE

K/A:

211000 Standby Liquid Control System

K1. Knowledge of the physical connections and/or cause-effect relationships between STANDBY LIQUID CONTROL SYSTEM and the following:
(CFR: 41.2 to 41.9 / 45.7 to 45.8)

K1.05 RWCU 3.4 3.6

LESSON PLAN/OBJECTIVE:

C41-SBLC-LP-01101, Standby Liquid Control, **Ver. 6.1**, EO 011.002.A.04

References used to develop this question:

34SO-C41-003-1, Standby Liquid Control System, **Ver. 12.2**

Modified from HLT Database Q#LT-011002-007

Original Question

Unit 1 was at 100% rated power when a reactor scram occurred.

- o Several control rods did NOT insert (ATWS)
- o Boron injection is required

On panel 1H11-P603, the SBLC Pump Select switch is placed in the Start Sys "A" position.

_____ squib valve(s) will detonate; AND,

RWCU Isolation valve, _____ will CLOSE.

A. Both;
1G31-F001

B.✓ Both;
1G31-F004

C. Only one;;
1G31-F001

D. Only one;
1G31-F004

10. 212000K6.05 001/01001C71/012.003.C.10/MOD/SYS-B/BOTH/212000K6.05/2/1/F/2/JSC/ELJ

Unit 1 is operating at 30% RTP.

The following failure occurs on Turbine Control Valve (TCV) #1 Emergency Trip Supply (ETS) Oil Pressure Sensor:

- The transmitter for TCV #1, ETS Oil Pressure Sensor, begins drifting down and settles below its trip setpoint

The TCV Closure RPS Scram setpoint is _____ .

Based on the above conditions, a RPS HALF (1/2) Scram _____ be received.

A. ✔ 670 psig;
will

B. 670 psig;
will NOT

C. 1100 psig;
will

D. 1100 psig;
will NOT

Description:

Four independent pressure switches, one on each TCV, monitor the hydraulic trip oil pressure on the disk dump valve. If trip oil (FASTC) pressure decreases below 670 psig, the pressure switches open contacts to input a scram signal to RPS. The four channels input to RPS as follows: CV#1-RPS channnel A1, CV#2-RPS channnel B1, CV#3-RPS channnel A2, CV#4-RPS channnel B2. Any one trip signal will cause a half scram on RPS. A full scram will require a trip signal on both RPS sides.

K/A JUSTIFICATION:

This question satisfies the K/A statement by requiring the applicant to know how a single malfunction in a Control Valve pressure sensor will affect RPS logic.

The "B" distractor is plausible since the first part is correct. The second part is plausible if the applicant thinks about the RPS actuation of the MSIVS or Stop Valves (means and extremes) instead of the RPS actuation of the Control Valves (1/4 taken twice).

The "C" distractor is plausible if the applicant thinks about the automatic start feature of the standby pump (1100 psig) instead of the scram setpt (670 psig). The second part is plausible since it is correct.

The "D" distractor is plausible if the applicant thinks about the automatic start feature of the standby pump (1100 psig) instead of the scram setpt (670 psig). The second part is plausible if the applicant thinks about the RPS actuation of the MSIVS or Stop Valves (means and extremes) instead of the RPS actuation of the Control Valves (1/4 taken twice).

A. **Correct** - See description above.

B. **Incorrect** - See description above.

C. **Incorrect** - See description above.

D. **Incorrect** - See description above.

References:
NONE

K/A:

212000 Reactor Protection System

K6. Knowledge of the effect that a loss or malfunction of the following will have on the REACTOR PROTECTION SYSTEM :
(CFR: 41.7 / 45.7)

K6.05 RPS sensor inputs 3.5 3.8

LESSON PLAN/OBJECTIVE:

C71-RPS-LP-01001, Reactor Protection System, **Ver 6.0**, EO 012.003.C.10 and 012.005.B.02

References used to develop this question:

LFD-1-RPS-15, Turbine Control Valve Trip Oil Pressure-Low, **Ver 33**
LFD-1-RPS-14, Turbine Stop Valve-Closure, **Ver 66**

Modified from HLT Database Q#245000K1.04-001

Original Question

With **Unit 2** at 35% RTP, which ONE of the below choices correctly completes the following statements?

(Limit your response ONLY to direct valve input to RPS Logic, NOT plant integrated response.)

The MINIMUM number of Turbine Control Valves (TCV) that will DIRECTLY cause at least a RPS HALF (1/2) Scram from a TCV Fast Closure Trip is _____ .

The MINIMUM number of Turbine Stop Valves (TSV) that will DIRECTLY cause a RPS FULL Scram from a TSV Closure is _____ .

A. two (2);
three (3)

B. two (2);
two (2)

C.✓ one (1);
three (3)

D. one (1);
two (2)

11. 215003A2.05 001/01202C51/012.003.C.10/NEW/SYS-I/BOTH/215003A2.05/2/1/H/3/ARB/ELJ

A **Unit 2** Reactor startup is in progress.

At 10:00, the IRMs indicate as follows:

- o IRMs A, B, C & D 24/125 on Range 6
- o IRMs E, F, G & H 10/40 on Range 5

IRMs A - D are increasing 3/125 per minute AND
IRMs E - H are increasing 9/40 per minute.

At 10:01, the voltage at the detector for IRM H decreases to one (1) VDC.

With the above IRM conditions,

The EARLIEST listed time that the IRMs will initiate a half scram signal is _____ .

IAW the associated ARPs on 2H11-P603, an OD-7 Option 2, Control Rod Position Check, _____ REQUIRED to be performed.

A. ✔ 10:01;
is

B. 10:01;
is NOT

C. 10:03;
is

D. 10:03;
is NOT

Description:

Phil, this was question 1 of 10 of the previously submitted questions. Changes were incorporated based on your ES-401-9 comments.

Any one of the eight IRMs reaching a downscale (10/125 or 3.2/40), upscale (80/125 or 25.6/40), upscale trip (115/125 or 36.8/40) or an INOP condition will generate a half scram signal, if not bypassed. The power supply output is 100 VDC for application to the detector. A voltage sensing circuit is used to detect decreases in the output voltage and provide a Low High Voltage Trip signal to the Drawer Inop circuit. With the current value on IRMs, all IRMs are below the RPS Scram setpoint of 36.8/40. When the voltage at IRM H drops to one (1) VDC, an IRM Inop trip will be generated in Channel B making 10:01 the EARLIEST listed time that the IRMs will generate a half scram signal. At 10:03, IRMs E, F, G & H will be above their scram setpoint of 36.8/40 (10/40 + 27/40 = 37/40).

IAW 34AR-603-118-2, REACTOR AUTO SCRAM SYSTEM B TRIP, 603-118, Note before step 5.2.4, "IF surveillance testing is in progress which initiates half scram signals, it is

acceptable to delay the performance of the OD-7 Option 2 UNTIL the applicable surveillance is complete. The following step is NOT applicable IF all control rods are inserted. "

K/A JUSTIFICATION:

This question satisfies the K/A statement by requiring the applicant to predict the earlist listed time that the IRMs will initiate a scram signal and then asking the applicant if an OD-7 Option 2, Control Rod Position Check, is required to be performed to mitigate this event. 34AR-603-118-2, will require the Control Rod Position Check to be performed.

The "B" distractor is plausible since the first part is correct. The second part is plausible if the applicant thinks that a full scram is generated and remembers the Note which states that if a full scram is received the step for an OD-7 Option 2 is not required. Also plausible since changing IRM H to IRM A, C, E or G will make the second part correct.

The "C" distractor is plausible if the applicant thinks the the voltage drop on IRM H will only generate a rod block but calculates that at 10:03 that the scram setpoint of 36.8/40 on IRMs E, F, G & H has been exceeded at 10:03. The second part is plausible since it is correct.

The "D" distractor is plausible if the applicant thinks the the voltage drop on IRM H will only generate a rod block but calculates that at 10:03 that the scram setpoint of 36.8/40 on IRMs E, F, G & H has been exceeded at 10:03. The second part is plausible if the applicant thinks that a full scram is generated and remembers the Note which states that if a full scram is received the step for an OD-7 Option 2 is not required. Also plausible since changing IRM H to IRM A, C, E or G will make the second part correct.

A. **Correct** - See description above.

B. **Incorrect** - See description above.

C. **Incorrect** - See description above.

D. **Incorrect** - See description above.

References:
NONE

K/A:

215003 Intermediate Range Monitor (IRM) System

A2. Ability to (a) predict the impacts of the following on the INTERMEDIATE RANGE MONITOR (IRM) SYSTEM ; and (b) based on those predictions, use procedures to correct, control, or mitigate the consequences of those abnormal conditions or operations: (CFR: 41.5 / 45.6)

A2.05 Faulty or erratic operation of detectors/system 3.3 3.5

LESSON PLAN/OBJECTIVE:

C51-IRM-LP-01202, Intermediate Range Monitors, **Ver 5.0**, EO 012.003.C.10

References used to develop this question:

34AR-603-109-2, Reactor Neutron Monitoring Sys Trip, **Ver. 4.5**
34AR-603-118-2, Reactor Auto Scram System B Trip, **Ver. 4.0**
34AR-603-203-2, IRM Bus A Upscale Trip Or Inop, **Ver. 3.0**
34AR-603-212-2, IRM Bus B Upscale Trip Or Inop, **Ver. 3.0**
34AR-603-221-2, IRM Upscale, **Ver. 2.1**
34AR-603-238-2, Rod Out Block, **Ver. 3.2**

12. 215004A3.01 001/01201C51/012.003.A.10/MOD/SYS-B/BOTH/215004A3.01/2/1/H/2/JSC/ELJ

Unit 2 is performing a Reactor Startup IAW 34GO-OPS-001-2, Plant Startup.

- o IRMs are on Range 2
- o SRMs A, B, C, and D are fully inserted in the core
- o SRMs C and D are currently selected for withdrawal

The following indications currently exist:

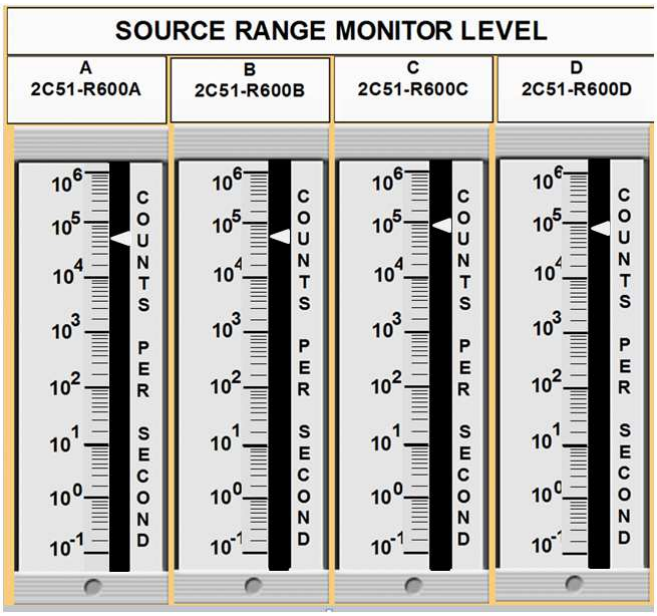

Based on these indications,

Annunicator ROD OUT BLOCK, (603-238) _____ be illuminated.

If the DRIVE OUT pushbutton for SRM/IRM Drive Contol is depressed for 10 seconds and then released, SRM C & D indications above will _____ .

A. will;
stop lowering as soon as the "Drive Out" push button is released

B. will;
continue to lower until SRM C & D are fully withdrawn

C. will NOT;
stop lowering as soon as the "Drive Out" push button is released

D. will NOT;
continue to lower until SRM C & D are fully withdrawn

Description:

The SRM UPSCALE rod block prevents rod withdrawal unless all SRM detectors read less than 7 x 10^4 cps. The rod block for this condition will be bypassed when either one of the following: the associated IRMs are on Range 8 (and above), Mode Switch in RUN, or individual SRM is bypassed.

The SRM drive mechanism positions the shuttle tube (containing SRM detector chamber) from fully inserted position (18 inches above core midplane) to fully withdrawn position (30 inches below the bottom of the active core). When inserting detectors, the IN pushbutton is not required to be held. Once depressed the insertion will seal in until the IN pushbutton is depressed a second time. Depressing the OUT pushbutton while the detectors are inserting will not cancel or stop the insertion. When withdrawing detectors, the OUT signal does not seal in, the OUT pushbutton must be continuously depressed.

K/A JUSTIFICATION:

This question satisfies the K/A statement by requiring the applicant to monitor the SRM cps indication and determine the automatic plant response (Rod Block).

The "B" distractor is plausible since the first part is correct. The second part is plausible since the Drive circuit has a seal in feature for driving the detectors into the core. When withdrawing the detectors the operator must continuously depress the Drive Out pushbutton for the detectors to withdraw. If the detector were to continuously withdraw, the CPS indication would lower until the detector is fully withdrawn.

The "C" distractor is plausible if the applicant thinks about the SRM TRIP (3x10^5 cps) setpoint instead of the SRM UPSCALE alarm (7x10^4 cps). The second part is plausible since it is correct.

The "D" distractor is plausible if the applicant thinks about the SRM TRIP (3x10^5 cps) setpoint instead of the SRM UPSCALE alarm (7x10^4 cps). The second part is plausible since the Drive circuit has a seal in feature for driving the detectors into the core. When withdrawing the detectors the operator must continuously depress the Drive Out pushbutton for the detectors to withdraw. If the detector were to continuously withdraw, the CPS indication would lower until the detector is fully withdrawn.

A. **Correct** - See description above.

B. **Incorrect** - See description above.

C. **Incorrect** - See description above.

D. **Incorrect** - See description above.

References:

K/A:

215004 Source Range Monitor (SRM) System

A3. Ability to monitor automatic operations of the SOURCE RANGE MONITOR (SRM) SYSTEM including:
CFR: 41.7 / 45.7)

A3.01 Meters and recorders 3.2 3.2

LESSON PLAN/OBJECTIVE:

C51-SRM-LP-01201, Source Range Monitors, **Ver 7.0**, EO 012.003.A.10, 012.003.A.06

References used to develop this question:

34AR-603-204-2, SRM UPSCALE OR INOPERATIVE, **Ver 1**
Modified from HLT Database Q#215004K5.03-003

Original Question

Unit 1 is starting up per 34GO-OPS-001-1, "Plant Startup". The reactor is has already been declared CRITICAL.

- o All IRMs are on Range 3
- o SRM detectors are being intermittently withdrawn as required by the procedure

As the SRM "A" detector is being withdrawn, SRM "A" count rate decreases to 150 cps.

When SRM "A" count rate reaches 150 cps, a control rod block _____ have already occurred.

If the "DRIVE OUT" pushbutton continues to be depressed, the SRM "A" detector _____ continue to withdraw further.

A. will;
will

B. will;
will NOT

C.✓ will NOT;
will

D. will NOT;
will NOT

13. 215004K2.01 001/01201C51/012.003.A.09/MOD/SYS-B/BOTH/215004K2.01/2/1/F/2/ARB/ELJ

Unit 2 is starting up with Reactor power at 5% RTP.

24/48 VDC Cabinet 2B, 2R25-S016, de-energizes and can NOT be restored.

SRM Channels _____ will have lost their power supply.

A. 2A & 2C

B. 2A & 2D

C. 2B & 2C

D. 2B & 2D

Description:

Source Range Monitor Power Supplies:

Channels A & C - 24/48 VDC Cabinet 2A, 2R25-S015
Channels B & D - 24/48 VDC Cabinet 2B, 2R25-S016

Typically, power supplies are divisionalized where Div. 1 will be powered by the "A" side of a power system and Div. 2 will be powered by the "B" side of a power system. In some cases this does not hold true, i.e. 2P41-F316**A** & F316**D**, PSW TB Isolation valves are powered by a Div. 1 power supply (2R24-S025) and 2P41-F316**B** & F316**C** are powered by a Div. 2 power supply (2R24-S027) .

K/A JUSTIFICATION:

This question satisfies the K/A statement by requiring the applicant to know the power supply to SRM Channels B and D.

The "A" distractor is plausible if the applicant remembers that this is a power supply to 2 of the SRMs and thinks 2A & 2C SRMs are the SRMs that remain de-energized. Also would be correct if 2R25-S015, 24/48 VDC Cabinet 2A, is de-energized.

The "B" distractor is plausible if the applicant remembers a power arrangement where components "A" & "D" are powered by the same power supply (PSW 2P41-F316A & F316D) and thinks 2A & 2D SRMs are the SRMs that will be de-energized.

The "C" distractor is plausible if the applicant remembers a power arrangement where components "B" & "C" are powered by the same power supply (PSW 2P41-F316B & F316C) and thinks 2B & 2C SRMs are the SRMs that will be de-energized.

A. **Incorrect** - See description above.

B. **Incorrect** - See description above.

C. **Incorrect** - See description above.

D. **Correct** - See description above.

References:
NONE

K/A:

215004 Source Range Monitor (SRM) System

K2. Knowledge of electrical power supplies to the following:
(CFR: 41.7)

K2.01 SRM channels/detectors 2.6 2.8

LESSON PLAN/OBJECTIVE:

C51-SRM-LP-01201, Source Range Monitors, **Ver. 7.0**, EO 012.003.A.09

References used to develop this question:

A-20159, Plant Hatch Load List, 2R25-S015, **Ver. 3.0**
A-20160, Plant Hatch Load List, 2R25-S016, **Ver. 2.0**

Modified from HLT Database Q#215004-011

Original Question

Which of the below electrical distribution cabinets correctly completes the following statement?

The power supply to SRM channels B and D on Unit 2 is _____.

A. 24/48 VDC Cabinet 2A, 2R25-S015

B.✓ 24/48 VDC Cabinet 2B, 2R25-S016

C. 125 VDC A Cabinet, 2R25-S001

D. 125 VDC B Cabinet, 2R25-S002

14. 215005K5.03 001/05401RMCS/300.010.C.01/MOD/P-AB/BOTH/215005K5.03/2/1/H/3/JSC/ELJ

Unit 2 is starting up from a refueling outage.

- o Reactor power is 7% RTP

The NPO has just completed moving a Step of Control Rods (symmetrical pattern) to their withdraw limit of position 08.

Before movement of the next group of control rods, the following occurs,

- o One (1) Control Rod starts drifting out from position 08

With the above Control Rod drifting out,

Notch positions _____ will provide the HIGHEST change in magnitude of LPRM power indication as the control rod drifts through this range of notch positions.

IAW 34AB-C11-004-2, Mispositioned Control Rods, the OATC is required to _____ .

A. 20 to 24;
select the drifting rod AND drive it to position 08 using the EMERGENCY IN switch

B.✓ 20 to 24;
enter 34AB-C71-001-1, Scram Procedure, AND SCRAM the reactor

C. 36 to 40;
select the drifting rod AND drive it to position 08 using the EMERGENCY IN switch

D. 36 to 40;
enter 34AB-C71-001-1, Scram Procedure, AND SCRAM the reactor

Description:

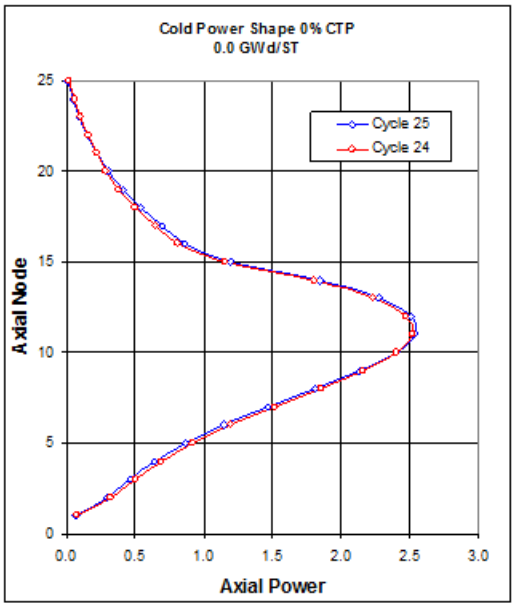

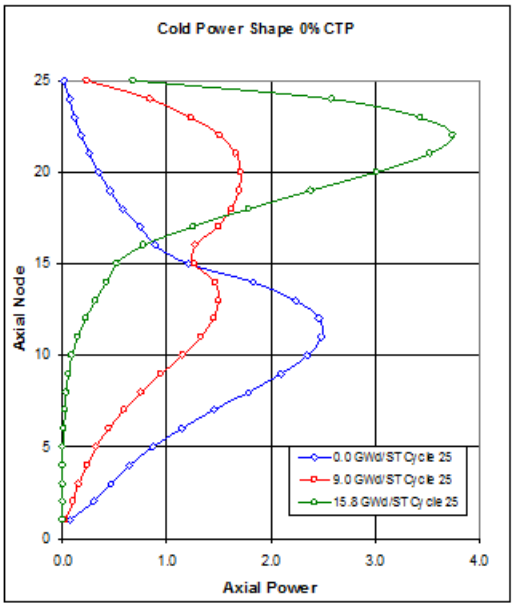

The graph above shows the cold, All Rods-In (ARI) axial power shape for beginning of cycle 24 compared to the previous cycle. The strong mid-peaked power shape is the reason for the additional banking between notches 20 and 30 for BPWS Groups 2-4. (NOTE: the results above are hypothetical and assume that the reactor is critical with all-rods-in. However, the results are representative of the axial flux shape during the approach to critical). Remember that the flux profiles change over cycle life. The mid-peaked flux/power profile at cold ARI conditions gradually shifts to the top of the core as the cycle burns.

CONDITION	POWER	ACTION
More than 1 C/R drifting out OR has drifted out	Any Power	Enter 34AB-C71-001-1, Scram Procedure, AND SCRAM the reactor
More than 4 C/Rs mispositioned greater than 1 notch		
1 OR more C/Rs drifting out OR has drifted out	Less than LPSP (< 21.0% on APRMs)	

K/A JUSTIFICATION:

This question satisfies the K/A statement by asking the applicant to know the axial flux profile of the core which will determine where the higher worth notch positions will be. This in turn will be indicated by the LPRMs as the rod is moved through this region. The applicant has to understand that at the BOC the flux profile is low/mid plane whereas at EOC it shifts to the upper plane region.

The "A" distractor is plausible since the first part is correct. The second part is plausible if the applicant takes the required actions for a Control Rod drifting out when reactor power is above the Low Power Set Point (LPCP) of 26% RTP.

The "C" distractor is plausible if the applicant thinks about the axial profile for the EOC vice the BOC (startup after refueling outage). The second part is plausible if the applicant takes the required actions for a Control Rod drifting out when reactor power is above the Low Power Set Point (LPCP) of 26% RTP.

The "D" distractor is plausible if the applicant thinks about the axial profile for the EOC vice the BOC (startup after refueling outage). The second part is plausible since it is correct.

A. **Incorrect** - See description above.

B. **Correct** - See description above.

C. **Incorrect** - See description above.

D. **Incorrect** - See description above.

References:

NONE

K/A:

215005 Average Power Range Monitor/Local Power Range Monitor System

K5. Knowledge of the operational implications of the following concepts as they apply to AVERAGE POWER RANGE MONITOR/LOCAL POWER RANGE MONITOR SYSTEM : (CFR: 41.5 / 45.3)

K5.03 Control rod symmetrical patterns 2.9 3.3

LESSON PLAN/OBJECTIVE:

C11-RMCS-LP-05401, Reactor Manual Control System, **Ver 6.0**, EO 200.091.A. 03

References used to develop this question:

34AB-C11-004-2, Mispositioned Control Rods, **Ver 4.0**

Modified from HLT Database Q#201001A1.03-001

Original Question

Unit 1 is at 15% power and is performing a reactor startup.

All control rods in the currently latched RWM step are at their Insert Limit.

- The Withdraw Limit for the latched step is position 08
- Control rod 30-31 is currently selected

When control rod 30-31 is withdrawn, the rod begins DRIFTING OUT.

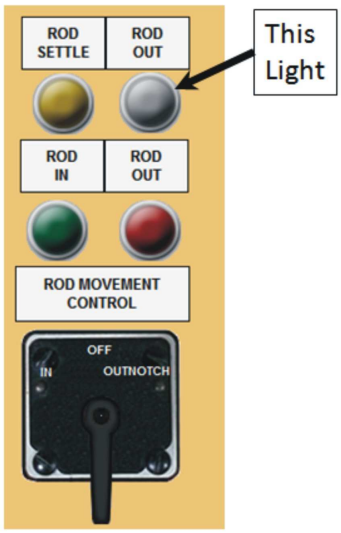

Which ONE of the choices below completes the following statements?

When control rod 30-31 reaches position 10, the Rod Movement Control "Rod Out" white light will be _____; and,

Per 34AB-C11-004-1, "Mispositioned Control Rods", a reactor scram _____ required.

A. extinquished;
is NOT

B. illuminated;
is NOT

C.✓ extinquished;
is

D. illuminated;
is

15. 217000K3.03 001/03901E51/039.013.A.01/NEW/SYS-I/BOTH/217000K3.03/2/1/H/3/ARB/ELJ

After a loss of Main Condenser vacuum transient on **Unit 2**, RCIC is operating in Pressure Control Mode.

The RCIC flow controller, 2E51-R612, is in AUTOMATIC with an output of 75%.

Subsequently, a malfunction causes 2E51-R612 controller output to drift from 75% to 95% resulting in the following RCIC indications:

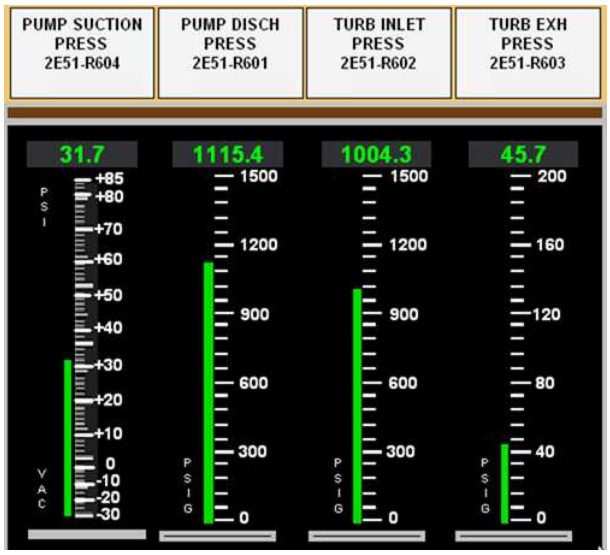

As the RCIC controller output drifts up to 95%, the reactor Cooldown Rate will _____ .

Based on the above indications, RCIC should have _____ .

A. decrease;
ONLY automatically tripped

B. decrease;
automatically tripped AND isolated

C✔ increase;
ONLY automatically tripped

D. increase;
automatically tripped AND isolated

Description:

Phil, this was question 2 of 10 of the previously submitted questions. Changes were incorporated based on your ES-401-9 comments.

RCIC automatically operating in pressure control mode during a scram due to loss of main condenser vacuum (MSIVs shut) will cause a constant work load to be performed with the turbine. As the failure of the controller output failure occurs which causes its setpt to increase from 75% to 95%, the turbine will need more steam to be converted to work thus cooldown rate

will increase.
RCIC indications show a high turbine exhaust pressure of 45.7 psig. This causes RCIC to trip on high turbine exhaust pressure (setpoint 40 psig).
RCIC System Rupture Disks (D001 and D002) provide protection for the RCIC Turbine casing from excessive exhaust pressure. The two diaphragms are in series and are designed to rupture at 150 psig. High pressure between the diaphragms will cause a RCIC System Isolation at 10 psig.

K/A JUSTIFICATION:

This question satisfies the K/A statement by asking the applicant to determine the effect of a RCIC malfunction has on decay heat removal. With RCIC in operation, the reactor cooldown rate is 7°F/hr. After RCIC flow increases, the turbine will have to perform more work therefore the cooldown rate will increase.

The "A" distractor is plausible if the applicant thinks about the failure of the RCIC flow detector senseing a higher output (75% to 95%). This failure would cause the RCIC controller to think that the flow too high and would then correct this by causing the system flow rate to lower to return the detector sensed flow to return to its setpoint. This lower flow would cause Cooldown rate to decrease since the turbine is working less. The second part is plausible since it is correct.

The "B" distractor is plausible if the applicant thinks about the failure of the RCIC flow detector senseing a higher output (75% to 95%). This failure would cause the RCIC controller to think that the flow too high and would then correct this by causing the system flow rate to lower to return the detector sensed flow to return to its setpoint. This lower flow would cause Cooldown rate to decrease since the turbine is working less. The second part is plausible if the applicant thinks that the 45.7 psig is enough to cause the isolation (setpoint 10 psig). The applicant does not understand that the 10 psig is sensed downstream of a diaphragm that ruptures at 150 psig. 45.7 psig would only cause a trip only if the first diaphragm had ruptured already.

The "D" distractor is plausible since the first part is correct. The second part is plausible if the applicant thinks that the 45.7 psig is enough to cause the isolation (setpoint 10 psig). The applicant does not understand that the 10 psig is sensed downstream of a diaphragm that ruptures at 150 psig. 45.7 psig would only cause a trip only if the first diaphragm had ruptured already.

A. **Incorrect** - See description above.

B. **Incorrect** - See description above.

C. **Correct** - See description above.

D. **Incorrect** - See description above.

References:
NONE

K/A:

217000 Reactor Core Isolation Cooling System (RCIC)

K3. Knowledge of the effect that a loss or malfunction of the REACTOR CORE ISOLATION COOLING SYSTEM (RCIC) will have on following:
(CFR: 41.7 / 45.4)

K3.03 Decay heat removal 3.5 3.5

LESSON PLAN/OBJECTIVE:

E51-RCIC-LP-03901, Reactor Core Isolation Cooling (RCIC), **Ver. 6.1**, EO 039.013.A.01

References used to develop this question:

34SO-E51-001-2, Reactor Core Isolation Cooling (RCIC) System, **Ver. 25.1**

16. 218000K1.04 001/03801B21/038.004.A.02/MOD/SYS-I/BOTH/218000K1.04/2/1/H/3/ARB/ELJ

Unit 2 has experienced a Loss of Offsite Power (LOSP).

The following conditions existed at 15:00:

- o ALL low pressure ECCS pumps have been manually started

- o RPV Pressure ..... 860 psig controlled by LLS
- o RWL ……..... -97 inches, lowering at 2 inches/minute
- o Drywell Pressure ……..… 0.85 psig, rising at 0.2 psig/minute

- o ADS Inhibit Switches..... "Normal" position

Given these trends,

The EARLIEST listed time that the ADS valves will have automatically OPENED is _____ .

A. 15:02

B. 15:04

C. ✔ 15:07

D. 15:13

Description:

Refer to logic drawing provided as a reference for developing this test item.

1. With a high Drywell pressure signal present (1.85 psig), the following must occur to initiate ADS.

   a. Low Reactor water level (Level 3) at +3.0"
   b. Low Reactor water level (Level 1) at -101"
   c. 102.5 second timer timed out
   d. CS Pump discharge pressure of 152 psig or RHR Pump discharge pressure of 127 psig
   e. Once the 102.5 second timer has timed out, if RHR or CS Pump discharge pressure is available, all 7 ADS Valves open

   2. Initiation of ADS without high Drywell pressure will occur if the following conditions exist simultaneously:

   a. Low Reactor water level (Level 3) at +3.0"
   b. Low Reactor water level (Level 1) at -101"
   c. High Drywell Pressure Bypass Timer timed out - 11 minutes
   d. 102.5 second timer timed out. Without the high Drywell pressure signal, the 102.5 second timer will not initiate until the High Drywell Pressure Bypass Timer times out and 2.a and 2.b are present.

e. CS Pump discharge pressure of 152 psig or RHR Pump discharge pressure of 127 psig.
f. Once the 102.5 second timer is timed out, if RHR or CS Pump discharge pressure is available, all 7 ADS Valves open.

At 1502, RWL is <-101" and at 1505, DW pressure rises to 1.85 psig, which starts the 102.5 second timer. At 1507 the 102.5 second timer has timed out and the ADS valves have automatically opened.

K/A JUSTIFICATION:

This question satisfies the K/A statement by requiring the applicant to analyze DW pressure and with DW pressure trend, this question is asking the effect that this will have on the ADS logic. The cause-effect is that the ADS logic will initially begin timing the 11 minute timer when RWL lowers to < -101 inches however DW pressure rises to > 1.85 psig and starts the 102.5 second timer (11 minute timer irrelative at this point due to it has longer delay time).

The "A" distractor is plausible if the applicant assumes the ADS permissives are met in 2 minutes when RWL reaches -101 inches causing the ADS valves to auto open.

The "B" distractor is plausible if the applicant ignores the DW pressure permissive and assumes the ADS permissives are met in 4 minutes (based on RPV level rate & 102.5 second timer timing out) causing the ADS valves to auto open.

The "D" distractor is plausible if the applicant assumes the ADS permissives are met in 13 minutes (based on RWL reaching -101 inches in 2 minutes and DW pressure bypass timing out in 11 minutes) causing the ADS valves to auto open.

A. **Incorrect** - See description above.

B. **Incorrect** - See description above.

C. **Correct** - See description above.

D. **Incorrect** - See description above.

References:
NONE

K/A:

218000 Automatic Depressurization System

K1. Knowledge of the physical connections and/or cause effect relationships between AUTOMATIC DEPRESSURIZATION SYSTEM and the following:
(CFR: 41.2 to 41.9 / 45.7 to 45.8)

K1.04 Drywell/containment pressure: Plant-Specific 3.9 4.2

LESSON PLAN/OBJECTIVE:

B21-ADS-LP-03801 "Automatic Depressurization System (ADS)", **Ver 4.0**, EO 038.004.a.02

References used to develop this question:

B21-ADS-03801, Automatic Depressurization System (ADS), Fig 2 & Fig 4
34SO-B21-001-2, ADS and LLS System, **Ver 13.14**

Modified from HLT-7 NRC Exam Q#20

ORIGINAL QUESTION (HLT-7 NRC Exam Q#20)

Unit 2 has experienced a Loss of Offsite Power (LOSP).

The following conditions existed at 15:00:

- Reactor…… All rods in
- RPV Pressure..... 860 psig controlled by LLS
- RWL……... -93 inches, decreasing at 2 inches/minute
- Drywell Pressure……..… 0.6 psig, increasing at 0.05 psi/minute
- ADS Inhibit Switches..... "Normal" position

Given these trends, which ONE of the following predicts the EARLIEST time that the ADS valves will automatically open?

A. 15:04

B. 15:06

C. 15:15

D.✓ 15:17

17. 218000K5.01 001/03801B21/038.001.A.04/BANK/SYS-B/BOTH/218000K5.01/2/1/H/3/ARB/ELJ

Unit 2 was operating at 100% RTP when a LOCA occurred.

o ADS logic automatically opened the ADS valves during the transient

When both ADS Inhibit Switches are placed in the "INHIBIT" position, the ADS valves will _____ AND, the 102.5 second ADS timer _____ .

A. close;
will reset

B.✔ close;
will NOT reset

C. remain open;
will reset

D. remain open;
will NOT reset

Description:

Two ADS Inhibit Switches (Normal/Inhibit) prevent ADS actuation when placed to INHIBIT, by opening contacts in the ADS circuit. A white light above each switch will light to alert the operator of this condition. If the white light above each switch is not illuminated, ADS may not be inhibited. If these switches are placed to **inhibit** with the ADS valves open from an automatic initiation signal, the valves will **close**. If all initiation signals are present and the Inhibit switches are placed in Normal from Inhibit, all ADS valves will immediately open. This is because the **102.5 second timers** and 11 minute timers are **NOT reset** when the Inhibit switch is placed in INHIBIT. See figure below.

ADS LOGIC CHANNEL A

12A same as K6A for valve
K13A same as K7A F013M

C.S. press @ 152#
OR
RHR press @ 127#

K/A JUSTIFICATION:

This question satisfies the K/A statement by requiring the applicant to understand the operation of the ADS logic when the Inhibit switches are positioned and the impact this operation has on the ADS valves (close) and 102.5 second timer (will NOT reset).

The "A" distractor is plausible since the first part is correct. The second part is plausible if the applicant remembers that the Inhibit switch will de-energize one side of the "A" logic and one side of the "B" logic and thinks it is the side that the 102.5 second timer is located on.

The "C" distractor is plausible if the applicant remembers that the "A" Inhibit switch will de-energize one side of the "A" logic and the "B" Inhibit switch will de-energize one side of the "B" logic and thinks it is the path that the 102.5 second timer is located on, in which case would reset the 102.5 second timer but leave the ADS valves open. The second part is plausible if the applicant remembers that the "A" Inhibit switch will de-energize one side of the "A" logic and the "B" Inhibit switch will de-energize one side of the "B" logic and thinks it is the side that the 102.5 second timer is located on.

The "D" distractor is plausible if the applicant remembers that the "A" Inhibit switch will de-energize one side of the "A" logic and the "B" Inhibit switch will de-energize one side of the "B" logic and thinks it is the path that the 102.5 second timer is located on, in which case would reset the 102.5 second timer but leave the ADS valves open. The second part is plausible since it is correct.

A. **Incorrect** - See description above.

B. **Correct** - See description above.

C. **Incorrect** - See description above.

D. **Incorrect** - See description above.

References:
NONE

K/A:

218000 Automatic Depressurization System

K5. Knowledge of the operational implications of the following concepts as they apply to AUTOMATIC DEPRESSURIZATION SYSTEM :
(CFR: 41.5 / 45.3)

K5.01 ADS logic operation 3.8 3.8

LESSON PLAN/OBJECTIVE:

B21-ADS-LP-03801, Automatic Depressurization System (ADS), **Ver. 4.1**, EO 038.001.A.04 & EO 038.003.A.02

References used to develop this question:

34SO-B21-001-2, Automatic Depressurization (ADS) And Low-Low Set (LLS) Systems, **Ver. 13.14**

18. 219000A2.13 001/20310PC/201.074.A.02/MOD/P-EOP/BOTH/219000A2.13/2/2/H/2/JSC/ELJ

Unit 2 is operating at 100% RTP when the following occurs;

At 10:00,
- o 'M' SRV inadvertantly opens
- o Suppression Pool temperature is 94°F and rising 1°F/minute

At 10:01,
- o Shift Supervisor directs a NPO to place RHR Loop A into Suppression Pool Cooling IAW 34SO-E11-010-2, Residual Heat Removal System

At 10:10,
- o 'M' SRV is closed
- o Suppression Pool temperature is 104°F and steady

With the above conditions,

At 10:02 and IAW 34SO-E11-010-2, 2E11-F047A, Hx Inlet Valve, _____ required to be CLOSED prior to starting the first RHR pump.

At 10:10, and IAW 34AB-T23-003-2, Torus Temperature Above 95° F, ALL available RHR Loops _____ required to be placed into Suppression Pool Cooling.

A. is;
are

B. is;
are NOT

C. is NOT;
are

D. is NOT;
are NOT

Description:

Per 34AB-T23-003-2, Torus Temperature Above 95°F, 4.3 states "IF Suppression Pool bulk average temperature exceeds 95°F, PLACE RHR in Suppression Pool cooling per 34SO-E11-010-2, Residual Heat Removal".

Per 34SO-E11-010-2, Inlet to the RHR Hx is initially isolated to prevent damage to the Hx from hydraulic shock created by starting the RHR Pump. Step 7.2.5.1.5 states:

UNLESS directed here by the Emergency Operating Procedures,
OR
UNLESS one RHR Pump is already in service,
<u>CLOSE 2E11-F047A, Hx Inlet Vlv</u>.

Once Torus temperature exceeds 100°F, the Primary Containment Control flowchart will have ALL AVAILABLE SUPPRESSION POOL COOLING PLACED IN SERVICE. Placing all available suppression pool cooling in service does not require the HX Inlet valve to be closed.

K/A JUSTIFICATION:

This question satisfies the K/A statement by requiring the applicant to be able to predict the impact high torus temperature will have on Suppression Pool Cooling. The higher Suppression Pool temperature effects the RHR Hx Inlet valve which now requires the Hx to be isolated prior to starting the first RHR pump based strictly on high Suppression Pool temperature. If Suppression Pool temperature was even higher (>100°F), the Hx would then not be required to be isolated.

The "B" distractor is plausible since the first part is correct. The second part is plausible if the applicant thinks about the TS requirement to secure all testing that puts heat into the Suppression Pool before 105°F instead of the requirement to place all available Suppression Pool Cooling in service at 100°F. The 105°F statement about the temperature is also located in the 34AB-T23-003-2 which adds plausibility to the applicant remembering the wrong temperature.

The "C" distractor is plausible since this is the action that the operator would take if required to placed all Suppression Pool Cooling in service once >100°F. The second part is plausible since it is correct.

The "D" distractor is plausible since this is the action that the operator would take if required to placed all Suppression Pool Cooling in service once >100°F. The second part is plausible if the applicant thinks about the TS requirement to secure all testing that puts heat into the Suppression Pool before 105°F instead of the requirement to place all available Suppression Pool Cooling in service at 100°F. The 105°F statement about the temperature is also located in the 34AB-T23-003-2 which adds plausibility to the applicant remembering the wrong temperature.

A. **Correct** - See description above.

B. **Incorrect** - See description above.

C. **Incorrect** - See description above.

D. **Incorrect** - See description above.

References:
NONE

K/A:

219000 RHR/LPCI: Torus/Suppression Pool Cooling Mode

A2. Ability to (a) predict the impacts of the following on the RHR/LPCI: TORUS/SUPPRESSION POOL COOLING MODE ; and (b) based on those predictions,

use procedures to correct, control, or mitigate the consequences of those abnormal conditions or operations: (CFR: 41.5 / 45.6)

A2.13 High suppression pool temperature 3.5 3.7

LESSON PLAN/OBJECTIVE:

EOP-PC-LP-20310, Primary Containment Control (PC), **Ver 3.0**, EO 201.074.A.02

References used to develop this question:

31EO-EOP-012-2, Primary Containment Control, **Ver 6**
34AB-T23-003-2, Torus Temperature above 95°F, **Ver 2.4**
34SO-E11-010-2, Residual Heat Removal System, **Ver 40.4**

Modified from HLT Database Q#201001A1.03-001 which was used on
NRC Exam 2009-301 Q#43

Original Question

Unit 1 is operating at 90% power.

- o A Safety Relief Valve (SRV) inadvertently opened causing Suppression Pool water temperature to increase
- o Suppression Pool water temperature reaches 97°F before operators are able to close the SRV

IAW 34AB-T23-003-1, "Torus Temperature Above 95°F", which ONE of the below choices correctly completes the following Residual Heat Removal (RHR) Suppression Pool Cooling alignment statement?

Place _____ loop(s) of RHR in Suppression Pool cooling, and
the RHR heat exchanger _____ required to be isolated prior to starting the RHR pump

A.✓ only one;
is

B. only one;
is NOT

C. all available;
is

D. all available;
is NOT

19. 223002A4.01 001/01301T23/013.045.A.05/NEW/SYS-I/BOTH/223002A4.01/2/1/H/3/ARB/ELJ

Unit 2 is operating at 100% RTP.

At 10:00, an event occurred which resulted in the following conditions:

- o HPCI Equipment (Pipe Penetration) Room, 170°F
- o Torus Area Ambient Temperature, 170°F

At 10:15,

- o HPCI Equipment (Pipe Penetration) Room, 185°F
- o Torus Area Ambient Temperature, 185°F

With the above conditions,

The EARLIEST listed time that 2E41-F002, HPCI Isolation valve, should have received an automatic isolation signal is _____ .

2E41-F002 valve position _____ be monitored on 2H11-P601 Vertical Display.

A. ✔ 10:00;
can

B. 10:00;
can NOT

C. 10:15;
can

D. 10:15;
can NOT

Description:

Any one of the following conditions will cause a Group 3 (HPCI) isolation:

1) HPCI Turbine Exhaust Diaphragm Press High (10 psig)
2) HPCI Steam Line Flow High U2 (202 in. H_2O dp or -100 in. H_2O dp)
3) HPCI Steam Line Pressure Low (134 psig)
4) **HPCI Equipment (Pipe Penetration) Room Temp High (165°F)**
5) Suppression Chamber Area Air Temp High (165°F) (14 min TD)
6) Suppression Chamber Area Diff Air Temp High (36°F) (14 min TD)
7) Emergency Area Cooler Temp High (165°F)

Any one of the following conditions will cause a Group 4 (RCIC) isolation:

1) **Suppression Chamber Area Air Temp High (165°F) (29 min TD)**
2) Suppression Chamber Area Diff Air Temp High (36°F) (29 min TD)
3) RCIC Turbine Exhaust Diaphragm Press High (10 psig)

4) RCIC Steam Line Flow High 143" H_2O or -100" H_2O
5) RCIC Steam Line Pressure Low (95 psig)
6) RCIC Equipment Room Temp High (165°F)

With the HPCI Pipe Penetration Room temperature above 165°F, the HPCI system will receive an auto isolation signal without a time delay.

The 2H11-P601 Vertical Display has multiple system valve indications, including some but NOT all from the HPCI System. 2E41-F002, Inboard Isolation valve, is one of the valves listed but 2E41-F041, Inboard Suction valve, is NOT indicated. Both are isolation valves and will close on a Group 3 signal.

K/A JUSTIFICATION:

This question satisfies the K/A statement by requiring the applicant to determine (monitor) 2E41-F002 valve closure of the Primary Containment Isolation System (PCIS) in the Main Control Room. The operator can monitor valve position on Main Control Room panel 2H11-P601.

The "B" distractor is plausible since the first part is correct. The second part is plausible if the applicant remembers that some of the HPCI Isolation valves are on the Vertical Display and thinks about the 2E41-F041 (which is NOT displayed) instead of the 2E41-F002 which is displayed.

The "C" distractor is plausible if the applicant thinks the Torus area ambient temperature isolation has a 14 minute time delay or does not realize that the HPCI Pipe Penetration (equipment) room temperature isolation does not have a time delay at all. The second part is plausible since it is correct.

The "D" distractor is plausible if the applicant thinks the Torus area ambient temperature isolation has a 14 minute time delay or does not realize that the HPCI Pipe Penetration (equipment) room temperature isolation does not have a time delay at all. The second part is plausible if the applicant remembers that some of the HPCI Isolation valves are on the Vertical Display and thinks about the 2E41-F041 (which is NOT displayed) instead of the 2E41-F002 which is displayed.

A. **Correct** - See description above.

B. **Incorrect** - See description above.

C. **Incorrect** - See description above.

D. **Incorrect** - See description above.

References:
NONE

K/A:

223002 Primary Containment Isolation System/Nuclear Steam Supply Shut-Off

A4. Ability to manually operate and/or monitor in the control room:
(CFR: 41.7 / 45.5 to 45.8)

A4.01 Valve closures 3.6 3.5

LESSON PLAN/OBJECTIVE:

T23-PC-LP-01301, Primary Containment, **Ver. 7.1**, EO 013.045.A.05

References used to develop this question:

34AB-C71-001-2, Scram Procedure, **Ver. 12.4**

20. 223002K6.02 001/01401B21/014.007.A.01/NEW/SYS-B/BOTH/223002K6.02/2/1/H/3/JSC/ELJ

Unit 2 is operating at 100% RTP when the following occurs:

- o RPS A DE-ENERGIZES

Two (2) minutes later, a DC Switchgear DE-ENERGIZES as indicated below on Panel, 2H11-P651;

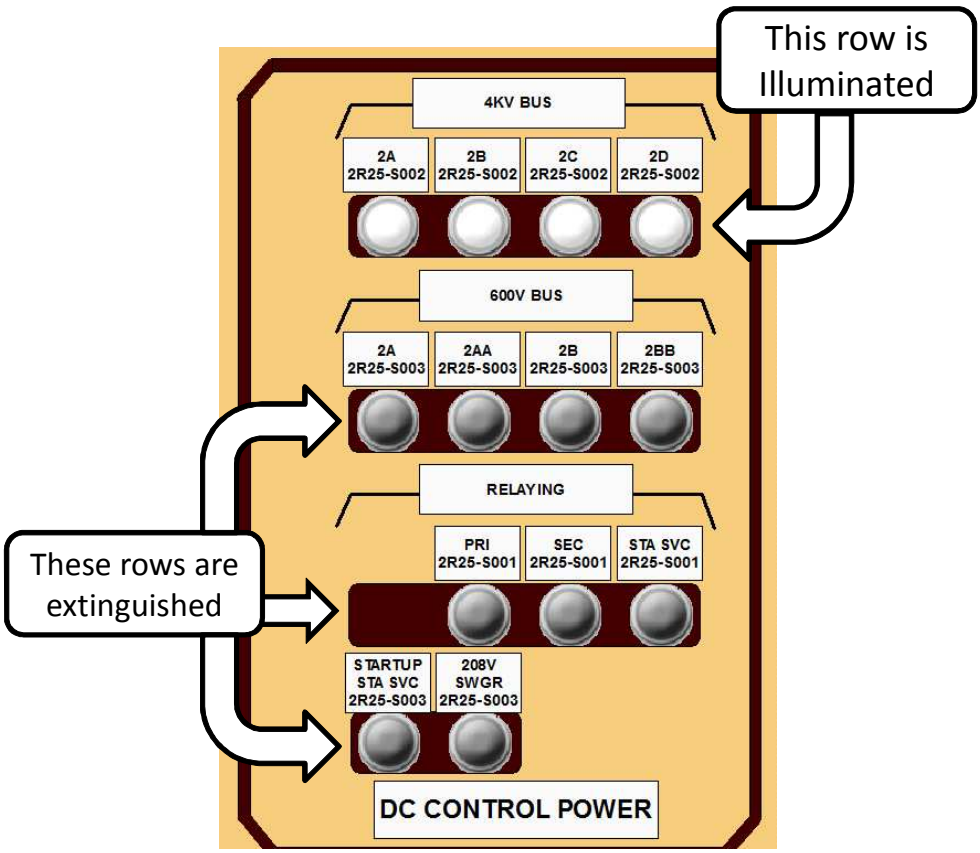

Based on the above electrical losses,

The 125/250 VDC Battery Switchgear that de-energized is _____ .

Ten (10) seconds later, _____ of the Main Steam Isolation Valves (MSIVs) will have automatically isolated.

A. 125/250 VDC Batt Swgr 2B, 2R22-S017; four (4)

B. 125/250 VDC Batt Swgr 2B, 2R22-S017; none

C. ✓ 125/250 VDC Batt Swgr 2A, 2R22-S016; four (4)

D. 125/250 VDC Batt Swgr 2A, 2R22-S016; none

Description:

Valve operation is controlled by a 4-way spool valve which is positioned by two solenoids, one AC powered and one DC powered. With both solenoids de-energized the spool valve supplies pneumatics to close the MSIV. With either of the solenoids energized the spool is positioned to open the MSIV. Having both AC and DC Solenoid Valves provides redundancy to prevent an isolation on the loss of one power supply and also provides a means of opening the MSIVs in an emergency, if either AC or DC power is available. The inboard MSIVs solenoids are powered from RPS A and R25-S001. The outboard MSIV solenoids are powered from RPS B and R25-S002. These solenoids can also be verified energized by checking the RED LEDs are illuminated on the vertical section of H11-P602 for the Inboard MSIVs or H11-P601 for the Outboard MSIVs. These LEDs were added to allow the Operator to monitor the status of each of the MSIVs solenoid valves to reduce the possibility of an inadvertent MSIV closure during testing.

R25-S001 (third row) and R25-S003 (second and fourth row) are both powered from 125/250 VDC Batt Swgr 2A, 2R22-S016.

R25-S002 (top row) is powered from 125/250 VDC Batt Swgr 2B, 2R22-S017.

K/A JUSTIFICATION:

This question satisfies the K/A statement by requiring the applicant to know the effect on the MSIVs (closing and isolating the Main Steam Lines) upon on a loss of DC power (2R25-S001) to the pilot valve solenoid with the given plant conditions.

The "A" distractor is plausible if the applicant thinks that 2R25-S002 is de-energized since 2R22-S016 is lost. An applicant could think this since 2R22-S016 (even numbered) would supply power to the 125/250 VDC Battery Switchgear 2B side based on normal logic scheme of A/C/1/3 and B/D/2/4 and etc.. The second part is plausible since it is correct.

The "B" distractor is plausible if the applicant thinks that 2R25-S002 is de-energized since 2R22-S016 is lost. An applicant could think this since 2R22-S016 (even numbered) would supply power to the 125/250 VDC Battery Switchgear 2B side based on normal logic scheme of A/C/1/3 and B/D/2/4 and etc.. The second part is plausible if the applicant thinks the power supply for the MSIV solenoids is similiar to that of Inboard PCIVs in that those are AC powered since they are inside the Drywell and the Outboard PCIVs are DC powered.

The "D" distractor is plausible since the first part is correct. The second part is plausible if the applicant thinks the power supply for the MSIV solenoids is similiar to that of Inboard PCIVs in that those are AC powered since they are inside the Drywell and the Outboard PCIVs are DC powered.

A. **Incorrect** - See description above.

B. **Incorrect** - See description above.

C. **Correct** - See description above.

D. **Incorrect** - See description above.

References:
NONE

K/A:

223002 Primary Containment Isolation System/Nuclear Steam Supply Shut-Off

K6. Knowledge of the effect that a loss or malfunction of the following will have on the PRIMARY CONTAINMENT ISOLATION SYSTEM/NUCLEAR STEAM SUPPLY SHUT-OFF : (CFR: 41.7 / 45.7)

K6.02 D.C. electrical distribution 3.0 3.2

LESSON PLAN/OBJECTIVE:

B21-SLLS-LP-01401, Main Steam and Low Low Set, **Ver 9.1**, EO 014.007.A.01

References used to develop this question:

34AB-R22-001-2, Loss of DC Buses, **Ver 4.3**

21. 230000K2.02 001/00701E11/006.001.A.02/MOD/SYS-B/BOTH/230000K2.02/2/2/F/2/ARB/ELJ

Unit 2 experiences a Loss of Offsite power.

- o 4160V 2G is the ONLY 4160V bus that is ENERGIZED

Based on the above conditions,

RHR pump 2B _____ be used for Suppression Pool Spray.

RHR pump 2D _____ be used for Suppression Pool Spray.

A. can;
can

B.✔ can;
can NOT

C. can NOT;
can

D. can NOT;
can NOT

Description:

AC Power supplies to RHR pumps:

RHR Pump “A” - Powered by 4160 VAC Emergency Bus “2E”, 2R22-S005
RHR Pump “C” & “D” - Powered by 4160 VAC Emergency Bus “2F”, 2R22-S006
RHR Pump “B” - Powered by 4160 VAC Emergency Bus “2G”, 2R22-S007

EDG 2C supplies power to 4160 VAC Emergency Bus “2G”, 2R22-S007.

RHRSW pump are powered by:

4160 VAC Bus “2E” supplies RHRSW “2A”
4160 VAC Bus “2F” (shared EDG suplies bus) supplies RHRSW “2C”
4160 VAC Bus “2G” supplies RHRSW “2B” and RHRSW “2D”

K/A JUSTIFICATION:

This question satisfies the K/A statement by requiring the applicant to determine which RHR pumps will be available for Torus Spray by knowing the Normal, Alternate & Emergency power supplies to each RHR pump.

The "A" distractor is plausible since the first part is correct. The second part is plausible if the applicant remembers 4160V 2F powers two (2) RHR pumps (2C & 2D) and thinks it is RHR 2B & 2D, leaving 2D RHR pump available for Suppression Pool Spray.

The "C" distractor is plausible if the applicant remembers that one (1) Division 2 RHR pump is powered from 2F & one (1) Division 2 RHR pump is powered from 2G and thinks 2B RHR pump is powered from 2F 4160V bus. The second part is plausible if the applicant remembers 4160V 2F powers two (2) RHR pumps (2C & 2D) and thinks it is RHR 2B & 2D, leaving 2D RHR pump available for Suppression Pool Spray.

The "D" distractor is plausible if the applicant remembers that one (1) Division 2 RHR pump is powered from 2F & one (1) Division 2 RHR pump is powered from 2G and thinks 2B RHR pump is powered from 2F 4160V bus. The second part is plausible since it is correct.

A. **Incorrect** - See description above.

B. **Correct** - See description above.

C. **Incorrect** - See description above.

D. **Incorrect** - See description above.

References:
NONE

K/A:

230000 RHR/LPCI: Torus/Suppression Pool Spray Mode

K2. Knowledge of electrical power supplies to the following: (CFR: 41.7)

K2.02 Pumps 2.8* 2.9*

LESSON PLAN/OBJECTIVE:

E11-RHR-LP-00701, Residual Heat Removal System, EO 006.001.A.02

References used to develop this question:

34SO-E11-010-1, Residual Heat Removal System, **Ver. 44.1**

Used on NRC Exam 2011-301 Q#19
Modified from HLT Database Q#230000K2.02 001

Original Question

Unit 1 experiences a Loss of Offsite power.

- o 4160V 1G is the ONLY 4160V bus that is ENERGIZED.

Which ONE of the following RHR pumps can be used for Torus Spray?

A. RHR pump 1A

B.✓ RHR pump 1B

C. RHR pump 1C

D. RHR pump 1D

22. 239002K1.07 001/01301PC/300.006.A.22/NEW/P-EOP/BOTH/239002K1.07/2/1/F/3/JSC/ELJ

Unit 2 is operating at 100% RTP when at transient occurs resulting in Suppression Pool level lowering with the following times and levels:

TIME	**LEVEL**
10:00	147 inches
10:02	145 inches

Based on the above conditions and IAW TS 3.6.2.2, Suppression Pool Water Level, the EARLIEST listed time that a Required Action Statement (RAS) is entered is _____ .

If Suppression Pool level lowers to 60 inches, the SRV T-Quenchers will be _____ .

A. 10:00;
covered

B. 10:00;
uncovered

C. ✔ 10:02;
covered

D. 10:02;
uncovered

Description:

Per 31EO-OPS-001-0,

VALUE	UNITS	UNIT TWO PRIMARY CONTAINMENT CONTROL EOP INFO
0	psig	Secure torus & D/W sprays prior to this pressure
1.0	%	Chugging will not occur as long as D/W atmosphere contains this amount of non-condensable gases
1.5	%	Minimum detectable H_2 concentration in PC & PCC flow chart entry required above this value
1.85	psig	D/W pressure PCC flow chart entry required & address torus spray(s) initiation before PC pressure reaches 11.0 psig
5.0	%	O_2 concentration deflagration limit & address PC venting irrespective of radiation releases @ PC O_2 concentration ≥ 5.0 % & H_2 concentration ≥ 6.0 %
6.0	%	H_2 concentration deflagration limit & address PC venting irrespective of radiation releases @ PC H_2 concentration ≥ 6.0 % & O_2 concentration ≥ 5.0 %
11.0	psig	Torus pressure @ which to address D/W spray(s) initiation
57.5	inches	Torus water level @ which SRV T-quenchers are uncovered

Per Unit 2 TS,
3.6.2.2 Suppression Pool Water Level

LCO 3.6.2.2 Suppression pool water level shall be > 146 inches and < 150 inches.

APPLICABILITY: MODES 1, 2, and 3.

K/A JUSTIFICATION:

This question satisfies the K/A statement by requiring the applicant to know the physical location of the SRV t-quenchers in the Torus. This is important so that the unit does not open an SRV into the torus with level too low which would directly pressurize the containment.

The "A" distractor is plausible if the applicant remembers the Torus water level low level alarm setpt of 147.25 inches instead of the TS requirement of 146 inches. The second part is plausible since it is correct.

The "B" distractor is plausible if the applicant remembers the Torus water level low level alarm setpt of 147.25 inches instead of the TS requirement of 146 inches. The second part is plausible if the applicant thinks about the Unit 1 Suppression Pool level of 63 inches for uncovering the SRV T-quenchers vice the Unit 2 Suppression Pool level of 57.5 inches.

The "D" distractor is plausible since the first part is correct. The second part is plausible if the applicant thinks about the Unit 1 Suppression Pool level of 63 inches for uncovering the SRV T-quenchers vice the Unit 2 Suppression Pool level of 57.5 inches.

A. **Incorrect** - See description above.

B. **Incorrect** - See description above.

C. **Correct** - See description above.

D. **Incorrect** - See description above.

References:
NONE

K/A:

239002 Relief/Safety Valves

K1. Knowledge of the physical connections and/or cause-effect relationships between RELIEF/SAFETY VALVES and the following: (CFR: 41.2 to 41.9 / 45.7 to 45.8)

K1.07 Suppression pool 3.6 3.8

LESSON PLAN/OBJECTIVE:

T23-PC-LP-01301, Primary Containment, **Ver 7.1**, 300.006.A.22

References used to develop this question:

Unit 2 TS
34AR-602-235-2, Torus Water Level High/Low, **Ver 2.5**

23. 245000K5.07 001/02401R13/024.001.A.05/MOD/P-NORM/BOTH/245000K5.07/2/2/F/3/ARB/ELJ

Unit 2 is operating at 100% RTP when 2R13-C008A, Isophase Bus Cooling Unit fan, trips.

With the above conditions,

The 2R13-C008B, Isophase Bus Cooling Unit fan, _____ .

If 2R13-C008B, Isophase Bus Cooling Unit fan, subsequently trips, the MAXIMUM Unit 2 Main Generator output limit is _____ .

A. will already be running;
12800 amps

B. will already be running;
14000 amps

C. must be manually started;
12800 amps

D. ✔ must be manually started;
14000 amps

Description:

Unit 2 normal configuration for Isophase Bus Duct Cooling is one fan running with the other fan off. If the "A" fan trips, the "B" fan will not auto start and must be manually started. The normal **Unit 1** configuration for Isophase Bus Duct Cooling is for both fans running.

If a total loss of bus duct cooling occurs, the Main Generator output will have to be reduced to within the self-cooled rating of the buses. This rating is 14,000 amps for Unit 2 and 12,800 amps for Unit 1.

K/A JUSTIFICATION:

This question satisfies the K/A statement by requiring the applicant to know the auxiliary system normal operation and the operational implication (Turbine/Generator reduced output) due to the limitations on operating the Main Generator without Isophase Bus Cooling Unit fans in service.

The "A" distractor is plausible if the applicant remembers that one Unit's Isophase Bus Cooling Unit Fans are BOTH normally in service and thinks it is Unit 2, therefore when the C008A fan trips, thinks C008B will already be in service. Also would be correct if asking the question on Unit 1. The second part is plausible if the applicant remembers the 12800 amp value and thinks it applies to Unit 2 instead of the 14000 amp limit. Also would be correct if asking the question on Unit 1.

The "B" distractor is plausible if the applicant remembers that one Units Isophase Bus Cooling Unit Fans are BOTH normally in service and thinks it is Unit 2, therefore when the C008A fan trips, thinks C008B will already be in service. Also would be correct if asking the question on Unit 1. The second part is plausible since it is correct.

The "C" distractor is plausible since it is correct. The second part is plausible if the applicant remembers the 12800 amp value and thinks it applies to Unit 2 instead of the 14000 amp limit. Also would be correct if asking the question on Unit 1.

A. **Incorrect** - See description above.

B. **Incorrect** - See description above.

C. **Incorrect** - See description above.

D. **Correct** - See description above.

References:
NONE

K/A:

245000 Main Turbine Generator and Auxiliary Systems

K5. Knowledge of the operational implications of the following concepts as they apply to MAIN TURBINE GENERATOR AND AUXILIARY SYSTEMS : (CFR: 41.5 / 45.3)

K5.07 Generator operations and limitations 2.6 2.9

LESSON PLAN/OBJECTIVE:

R13-LP-02401, Isophase Bus Duct Cooling, **Ver. 4.0**, EO 024.001.A.05

References used to develop this question:

34SO-N40-001-1, Main Generator Operation, **Ver. 17.4**
34SO-N40-001-2, Main Generator Operation, **Ver. 19.2**

Modified from HLT Database Q#LT-024001-001

Original Question

Unit 1 is operating at 100% RTP.

Which ONE of the choices below, completes the following statements?

The MAXIMUM Unit 1 Main Generator output limit following a complete loss of Isophase Bus Duct Cooling is _____ amps.

If the "A" Isophase Bus Duct Cooling fan trips, the "B" Isophase Bus Duct Cooling fan will _____ .

A. 12,800 amps; be off

B. 14,000 amps; be off

C. 14,000 amps; be running

D.✓ 12,800 amps; be running

24. 256000K6.01 001/03501P51/P70/EO 200.025.A.05/BANK/SYS-B/BOTH/256000K6.01/2/2/F/3/JSC/ELJ

Unit 2 is operating at 100% RTP when a TOTAL loss of Plant Air occurs.

Based on the above conditions,

The MAXIMUM listed Control Air pressure at which 2N21-F111, Feedwater Startup Level Control Valve, will be LOCKED UP in its existing position is _____ .

2N21-F117A and 2N21-F117B**,** RFPT Minimum flow isolation valves, will _____ .

A. ✔ 49 psig;
fail open

B. 49 psig;
remain closed

C. 74 psig;
fail open

D. 74 psig;
remain closed

Description:

On a loss of air at 50 psig, the Feedwater Startup Level Control Valve, 2N21-F111, LOCKS UP in its existing position.

Unit 2 Condensate, Condensate Booster, and Reactor Feed Pump minimum flow (Isolation and Control) valves fail OPEN as air pressure is reduced, possibly decreasing the flow available to the Reactor. Both the isolation valve and control valve are hydraulically operated via air. This is not true for Unit 1 isolation valve. The Unit 1 isolation valve is a motor operated valve therefore on a loss of air only the control valve will fail open not the isolation valve.

K/A JUSTIFICATION:

This question satisfies the K/A statement by requiring the applicant to know the Condensate/Feed system (RFPT minimum flow protection and startup level control valve) response to a loss of Air.

The "B" distractor is plausible since the first part is correct. The second part is plausible since Unit 1 isolation valve (motor operated) will not fail open on a loss of air. This is a Unit difference between the two plants.

The "C" distractor is plausible since this is the pressure (75 psig) at which Turbine Building Instrument Air Pressure, standby prefilter and afterfilter are automatically put into service. The second part is plausible since it is correct.

The "D" distractor is plausible since this is the pressure (75 psig) at which Turbine Building Instrument Air Pressure, standby prefilter and afterfilter are automatically put into service. The second part is plausible since Unit 1 isolation valve (motor operated) will not fail open on a loss of air. This is a Unit difference between the two plants.

A. **Correct** - See description above.

B. **Incorrect** - See description above.

C. **Incorrect** - See description above.

D. **Incorrect** - See description above.

References:
NONE

K/A:

256000 Reactor Condensate System

K6. Knowledge of the effect that a loss or malfunction of the following will have on the REACTOR CONDENSATE SYSTEM : (CFR: 41.7 / 45.7)

K6.01 Plant air systems 2.8 2.8

LESSON PLAN/OBJECTIVE:

P51-P52-P70-PLANT AIR-LP-03501, Plant Air Systems, **Ver 3.0**, EO 200.025.A.05

References used to develop this question:

34AB-P51-001-2, Loss Of Instrument & Service Air System Or Water Instrusion Into The Service Air System, **Ver 4.9**
34SO-N21-007-2, Condensate and Feedwater System, **Ver 52.1**

25. 259001G2.4.35 001/00201N21/002.006.A.03/NEW/SYS-B/BOTH/259001G2.4.35/2/2/F/3/ARB/ELJ

Unit 1 is operating at 100% RTP when an event occurs requiring the Main Control Room to be evacuated.

The ONLY action taken prior to leaving the Main Control Room was to manually scram the reactor.

Control has been established at the Remote Shutdown panels.

The Shift Supervisor dispatches an operator to locally trip RFPT 1A.

The operator will depress the local RFPT 1A trip pushbuttons at the _____ .

After RFPT 1A is tripped locally, without any additional operator actions, RFPT 1A will be _____ .

A. Turbine Building 1H21-P216 Panel; on the turning gear

B. Turbine Building 1H21-P216 Panel; windmilling

C. Turbine Building RFPT 1A area; on the turning gear

D. ✓ Turbine Building RFPT 1A area; windmilling

Description:

31RS-OPS-001-1, Shutdown From Outside Control Room, states (4.13) IF two Feedwater Pumps are in operation, THEN dispatch an operator to manually trip one pump. A local RFPT trip is accomplished using the Master Trip/Emergency Trip pushbuttons locally at the RFPT, which consists of two pushbuttons. Both RFPT trip pushbuttons must be simultaneously pressed to trip the RFPT. Once RFPT 1A is tripped, as long as the Condensate System remains in service, RFPT 1A will lower in speed to approximately 100 rpm and be windmilling. If the Condensate System is not in service or the minimum flow valve does not open, then RFPT 1A will lower in speed and go on Turning gear operation.

K/A JUSTIFICATION:

This question satisfies the K/A statement by requiring the applicant to have knowledge of local operator actions to trip RFPT 1A during a shutdown from outside the Main Control Room (emergency) and the resultant effects to RFPT 1A (windmill or Turning Gear) operation.

The "A" distractor is plausible since there are Feedwater controls at the 2H21-P216 to include the FW isolation valves (N21-F006 A/B) and FW Heaters. If the applicant remembers that there are FW controls at the H21-P216 then they also think that you can trip the RFP there also. The second part is plausible if the applicant thinks that since control of the plant has been established from the Remote Shutdown Panel, that the normal function of the RFPTs will not function and does not consider windmilling operation, therefore the RFPT 1A will coast down to zero (0) rpm and then automatically go on the Turning Gear. This is also plausible if the isolation valves were closed to the RFP then the RFP would not windmill but instead coast down to zero rpm and then automatically go on the Turning Gear.

The "B" distractor is plausible since there are Feedwater controls at the 2H21-P216 to include the FW isolation valves (N21-F006 A/B) and FW Heaters. If the applicant remembers that there are FW controls at the H21-P216 then they also think that you can trip the RFP there also. The second part is plausible since it is correct.

The "C" distractor is plausible since the first part is correct. The second part is plausible if the applicant thinks that since control of the plant has been established from the Remote Shutdown Panel, that the normal function of the RFPTs will not function and does not consider windmilling operation, therefore the RFPT 1A will coast down to zero (0) rpm and then automatically go on the Turning Gear. This is also plausible if the isolation valves were closed to the RFP then the RFP would not windmill but instead coast down to zero rpm and then automatically go on the Turning Gear.

A. **Incorrect** - See description above.

B. **Incorrect** - See description above.

C. **Incorrect** - See description above.

D. **Correct** - See description above.

References:
NONE

K/A:

259001 Reactor Feedwater System

G2.4.35 Knowledge of local auxiliary operator tasks during an emergency and the resultant operational effects. (CFR: 41.10 / 43.5 / 45.13) 3.8 4.0

LESSON PLAN/OBJECTIVE:

N21-CNDFW-LP-00201, Condensate And Feedwater System, **Ver. 9.1**, EO 002.006.A.03

References used to develop this question:

31RS-OPS-001-1, Shutdown From Outside Control Room, **Ver. 5.24**
34SO-N21-007-1, Condensate And Feedwater System, **Ver. 49.2**

26. 259002A3.04 001/04404B11/002.021.A.03/MOD/SYS-B/BOTH/259002A3.04/2/1/H/2/JSC/ELJ

Unit 2 is operating at 100% RTP with the following RWL indications:

- o 2C32-R606A, GEMAC, indication: 37.0 inches
- o 2C32-R606B, GEMAC, indication: 36.6 inches
- o 2C32-R606C, GEMAC, indication: 36.9 inches

Subsequently, a leak occurs on the 2C32-R606A instrument REFERENCE leg which results in a 3 inch/minute change in RWL.

Based on the above conditions and with NO operator actions,

INITIALLY, the indication on RWL instrument 2C32-R606B will _____ .

INITIALLY, Feedwater flow will _____ .

A. ✓ LOWER;
LOWER

B. LOWER;
INCREASE

C. INCREASE;
LOWER

D. INCREASE;
INCREASE

Description:

This question tests the applicants understanding of the INITIAL response to a reference leg break associated with R606A (R606C uses this same reference leg), how it affects the RFPT speed and how the instruments that come off a different reference leg will respond.

A leak in the reference leg causes 2C32-R606A & C to drift UP. Since one of these instruments is the Median signal (the level indication that is in the middle as determined by the SCMS module (C32-K648)), the RWLC sistem senses that RWL is high (above the setpoint of the Master RFP controller). This causes an initial response of a RFP speed reduction, which causes actual RWL to decrease.

Since the "R606B" is working normally, it responds to actual level conditions and its indication begins to decrease.

K/A JUSTIFICATION:

This question satisfies the K/A statement by asking the applicant's understanding of the INITIAL response to a reference leg break associated with R606A (R606C uses this same reference leg), how it affects the Feedwater flow and how the instruments that come off a different reference leg will respond.

The "B" distractor is plausible since the first part is correct and the second if the applicant confuses which instruments will be affected and which way they will fail. If so the applicant could think RWL is going down and think feedwater flow will be increasing.

The "C" distractor is plausible if the applicant remembers two R606s will be affected and thinks R606B is the second instrument. If so, R606B would then be increasing along with R606A. The second part is correct.

The "D" distractor is plausible if the applicant remembers two R606s will be affected and thinks R606B is the second instrument. If so, R606B would then be increasing along with R606A. The second is plausible if the applicant confuses which instruments will be affected and which way they will fail. If so the applicant could think RWL is going down and think Feedwater flow will be increasing.

A. **Correct** - See description above.

B. **Incorrect** - See description above.

C. **Incorrect** - See description above.

D. **Incorrect** - See description above.

References:
NONE

K/A:

259002 Reactor Water Level Control System

A3. Ability to monitor automatic operations of the REACTOR WATER LEVEL CONTROL SYSTEM including: (CFR: 41.7 / 45.7)

A3.04 Changes in reactor feedwater flow 3.2 3.2

LESSON PLAN/OBJECTIVE:

B11-RXINS-LP-04404, Reactor Vessel Instrumentation, **Ver 7.0**, EO 200.002.A.014
C32-RWLC-LP-00202, Reactor Water Level Control, **Ver 6.1**, EO 002.021.A.03

References used to develop this question:

34SO-N21-007-2, Condensate and Feedwater System, **Ver 52.1**

Modified from HLT Database Q#259002K3.07 001. This question used on HLT 6 exam #26.

Original Question

Unit 2 is operating at 100% RTP with the following RWL indications:

o 2C32-R606A, GEMAC, indication: +37.0"
o 2C32-R606B, GEMAC, indication: +36.6"
o 2C32-R606C, GEMAC, indication: +36.9"

Subsequently, the REFERENCE leg for RWL intrument 2C32-R606A developes a significant leak.

With NO operator actions, which ONE of the choices below describes the INITIAL response of BOTH the RWL indicator 2C32-R606B AND the speed of the RPFTs to this reference leg leak?

INITIALLY, the indication on RWL instrument 2C32-R606B will _____ .

INITIALLY, the RFPTs speed will _____.

A.✓ DECREASE
DECREASE

B. DECREASE
INCREASE

C. INCREASE
DECREASE

D. INCREASE
INCREASE

27. 261000A4.02 001/03001T46/030.001.A.01/MOD/SYS-I/BOTH/261000A4.02/2/1/H/2/ARB/ELJ

Unit 2 is operating at 100% RTP.

At 10:00, Secondary Containment receives an isolation signal.

At 10:01, the NPO secures SBGT 2A by placing the SBGT 2A fan control switch to the OFF position and then places the switch to the STBY position. (ONLY switch manipulated)

At 10:02, the following Unit 2 SPDS Diagnostic Screen is observed:

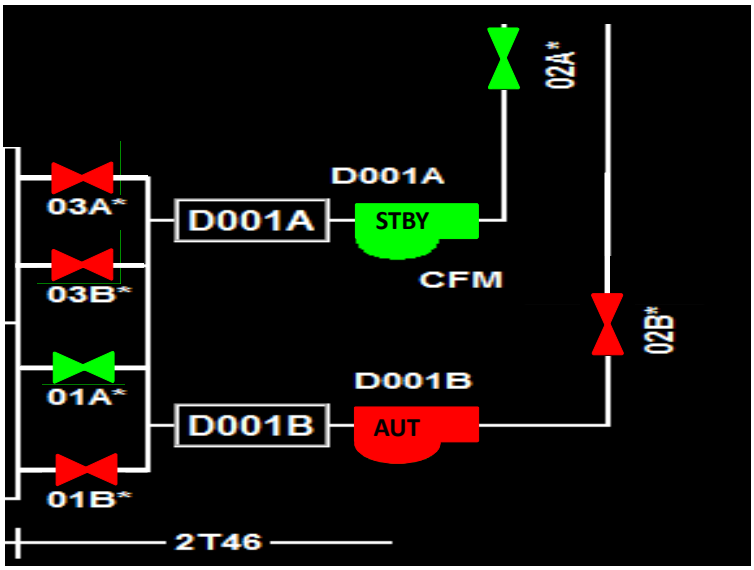

Based on the SPDS Diagnostic Screen at 10:02,

The Unit 2 SBGT system _____ operated as designed.

If SPDS becomes unavailable, Unit 2 SBGT flow can be monitored on Panels 2H11-P657 and _____ .

A. has;
2H11-P654

B. has;
2H11-P700

C. has NOT;
2H11-P654

D. has NOT;
2H11-P700

Description:

The parameter that initiates a Secondary Containment isolation signal will also provide a signal for SBGT to initiate. Upon automatic initiation of Unit 2 SBGT, the following occurs per

34SO-T46-001-2:
7.2.1.1 Upon AUTOMATIC initiation, confirm the following actions:
7.2.1.1.1 2T46-D001A and 2T46-D001B, SBGT A and B Fan/Filters, START.
7.2.1.1.2 SBGT A and B HTR is ON.
7.2.1.1.3 2T46-F001A and 2T46-F001B, SBGT A and B Fltr Inlets From Rx Bldg, OPEN AND
2T46-F003A and 2T46-F003B, SBGT A AND B Fltr Inlets From Refuel Flr, OPEN.
7.2.1.1.4 2T46-F002A and 2T46-F002B, SBGT A AND B Fltr Disch dampers, OPEN.
7.2.1.2 Standby Gas Treatment System Flow increases to 3.0-4.0 KCFM, as indicated on 2T41-R618 and 2U41-R600, SBGT A and B Flow To Main Stack.

Shutting down the Unit 2 SBGT as follows per 34SO-T46-001-2:
7.3.1 Shutdown 2T46-D001A, SBGT A Filter Train
7.3.1.1 Confirm annunciator 657-019, SBGT AUTO SIGNAL PRESENT, is RESET.
7.3.1.2 Confirm OR place 2T46-D001A, SBGT A Fan/Filter, control switch in the AUTO position.
7.3.1.3 Depress SBGT Fltr 2T46-D001A Fan/Htr Auto-Start Reset pushbutton.
7.3.1.4 Confirm SBGT A (Green) HTR OFF Light ILLUMINATED AND (Red) HTR On Light EXTINGUISHED.
7.3.1.5 Confirm Standby Gas Treatment Flow decreases to 0 KCFM as indicated on 2T41-R618 / 2U41-R600, SBGT A Flow to Main Stack.
7.3.1.6 Confirm 2T46-F002A, SBGT A Fltr Disch damper, CLOSES.
7.3.1.7 Confirm annunciator 2H11-P657-093, "SBGT FLTR A HI-HI TEMP TRIP OR FAN/HTR S/D" is NOT in the alarm condition.
7.3.1.8 Confirm closed OR close 2T46-F003A, SBGT A Fltr Inlet From Refuel Flr.
7.3.1.9 Confirm closed OR close 2T46-F001A, SBGT A Fltr Inlet From Rx Bldg.
7.3.1.10 Place the SBGT System A in STANDBY in accordance with the 'Standby - Ready for Automatic Start', subsection, of this procedure.

Based on the SPDS graphic, the SBGT System is NOT operating properly since placing the only placing the SBGT 2A fan control switch to the OFF position will not cause F001A or F003A to automatically close.

Normal SBGT flow is 3000 to 4000 SCFM and is monitored on SPDS and Panel **1H11-P657**.

K/A JUSTIFICATION:

This question satisfies the K/A statement by requiring the applicant to monitor the position of 2T46-F001A, SBGT A Filter Inlet (suction) valve, and know if it operated properly.

The "A" distractor is plausible since this is a Unit difference. 1T46-F001A/B will automatically close on Unit 1 when shutting down the respective Filter train. The 2T46-F001A/B and 2T46-F003A/B are the equivalent to the 1T46-F032A/B and 1T46-F040A/B and these valves operate the same between units. The second part is plausible since it is correct.

The "B" distractor is plausible since this is a Unit difference. 1T46-F001A/B will automatically close on Unit 1 when shutting down the respective Filter train. The 2T46-F001A/B and 2T46-F003A/B are the equivalent to the 1T46-F032A/B and 1T46-F040A/B and these valves operate the same between units. The second part is plausible if the applicant remembers that the 2H11-P700 panel is where SBGT dP is indicated and thinks that this is where SBGT flow is

indicated.

The "D" distractor is plausible since the first part is correct. The second part is plausible if the applicant remembers that the 2H11-P700 panel is where SBGT dP is indicated and thinks that this is where SBGT flow is indicated.

A. **Incorrect** - See description above.

B. **Incorrect** - See description above.

C. **Correct** - See description above.

D. **Incorrect** - See description above.

References:
NONE

K/A:

261000 Standby Gas Treatment System

A4. Ability to manually operate and/or monitor in the control room:
(CFR: 41.7 / 45.5 to 45.8)

A4.02 Suction valves 3.1 3.1

LESSON PLAN/OBJECTIVE:

T46-SBGT-LP-03001, Standby Gas Treatment System, **Ver. 6.0**, EO 030.001.A.01,

References used to develop this question:

34SO-T46-001-1, Standby Gas Treatment System, **Ver. 21.0**
34SO-T46-001-2, Standby Gas Treatment System, **Ver. 14.14**

28. 262001A1.04 001/02702R22/027.010.A.02/MOD/P-NORM/BOTH/262001A1.04/2/1/H/3/JSC/ELJ

Unit 2 is at 60% RTP with an operator transferring 4160 VAC Bus 2A to its Alternate supply. The following conditions currently exist:

- o Voltages are matched
- o Sync switch for the 4160 VAC 2A Alternate breaker is in the ON position
- o Sync light is at its dimmest (12 O'Clock position and steady)
- o Station SVC Interlock Cutout switch for ACB 135434-135454 is in the NORMAL (UP) position

Subsequently, the operator places the control switch for ACB 135454 (Alternate supply breaker) in the close position and IMMEDIATELY releases the switch.

Based on the above conditions,

Ten (10) seconds after the operator releases the control switch, the ampere indication will be as shown on _____ .

Figure 1 Figure 2 Figure 3 Figure 4

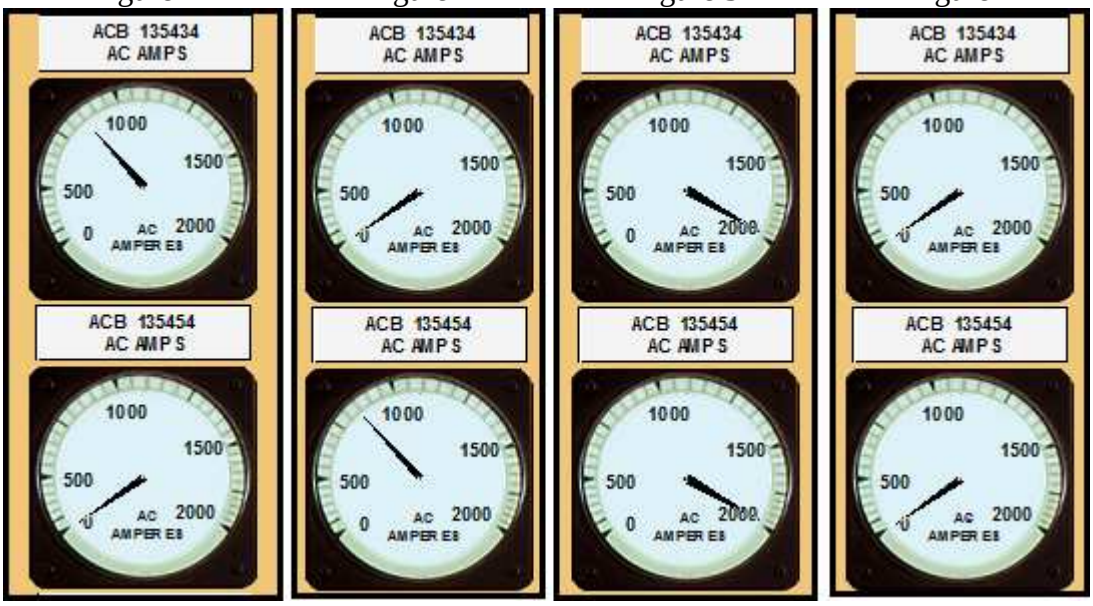

A. Figure 1

B. Figure 2

C. Figure 3

D. Figure 4

Description:

The normal and alternate supply breakers are interlocked to prevent paralleling the 4160 VAC busses. Interlock cutout switches are provided to bypass this interlock between the normal and alternate supply breakers on 4160 VAC busses 2A, 2B, 2C, & 2D for a period of time when swapping the power supplies is desired. This allows the busses to be paralleled only during the time the house loads are being swapped from the startup source to the normal generator on line operation. Use of these switches is also allowed when shutting down to swap the house loads over to the startup source. If both the alternate and supply breakers are closed at the same time with the Interlock Service cutout switch in the NORMAL (UP) position, both breakers will trip open. Immediately is used to ensure that the Interlock service cutout switch works properly. If the alternate supply breaker is held in the close position for a few seconds, the alternate breaker will remain closed.

K/A JUSTIFICATION:

This question satisfies the K/A statement by requiring the applicant to know the expected response concerning load currents to the electrical plant based on breaker interlocks.

The "A" distractor is plausible if the sync switch is left in the OFF position. When the operator places the control switch for the alternate supply to close, it will not attempt to close the alternate supply breaker.

The "B" distractor is plausible if the applicant thinks that the station service buses work the same as the emergency buses do. On the emergency buses, once you place the alternate supply breaker to close, the normal supply breaker will automatically open.

The "C" distractor is plausible under heavy load with both the alternate and normal supply breakers on the station service bus closed at the same time. A note in the 34SO-R22-001-2 states that "the current readings may increase on both the normal AND alternate supplies, WHEN both the normal AND alternate supply breakers are closed"per engineering evaluations. This is only plausible when both breakers are still closed.

A. **Incorrect** - See description above.

B. **Incorrect** - See description above.

C. **Incorrect** - See description above.

D. **Correct** - See description above.

References:
NONE

K/A:

262001 A.C. Electrical Distribution

A1. Ability to predict and/or monitor changes in parameters associated with operating the A.C. ELECTRICAL DISTRIBUTION controls including: (CFR: 41.5 / 45.5)

A1.04 Load currents 2.7 2.9

LESSON PLAN/OBJECTIVE:

R22-ELECT-LP-02702, 4160 VAC, **Ver 6.1**, EO 027.010.A.02

References used to develop this question:

34SO-R22-001-2, 4160 VAC System, **Ver 21.0**

Modified from HLT Database Q#LT-027010-004

Original Question

On **Unit 2**, an operator has been ordered to transfer 4160 VAC Bus 2A from its Normal to its Startup Supply.

The following switch positions for the 4160 VAC Bus 2A Startup Supply feeder breaker exist:

Switch	Position
Interlock Cutout Switch	NORMAL (up)
Sync Switch	ON
Breaker Control Switch	mid-position

Which ONE of the choices below completes the following statement?

If the operator positions the 4160 VAC Bus 2A Alternate Supply Breaker Control Switch to the CLOSE position and immediately releases the switch, the 4160 VAC Bus 2A:

Normal Breaker will be _____ ,
Startup Breaker will be _____ .

A. closed;
closed

B. closed;
open

C. open;
closed

D.✓ open;

29. 262002K4.01 001/02705R25/200.020.A.05/NEW/SYS-B/BOTH/262002K4.01/2/1/F/2/ARB/ELJ

Unit 2 is operating at 100% RTP when the following indications are received on Panel 2H11-P651;

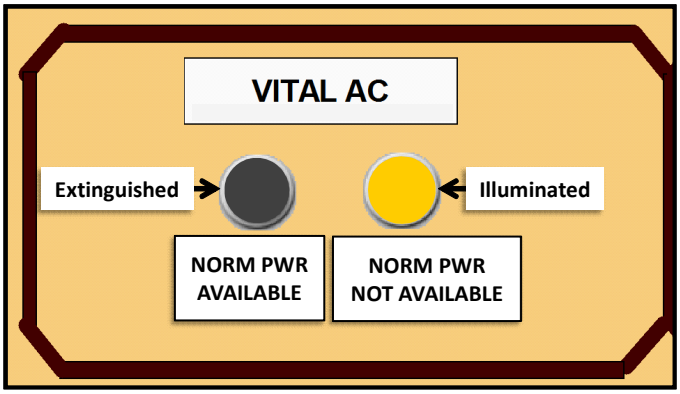

Based on the above indications and,

Fifteen (15) seconds later, the Vital AC Bus is receiving power from its _____ Power Supply.

The Alternate AC supply for the Vital AC Bus is _____ .

A. Alternate AC;
600V Bus 2C

B. Alternate AC;
600V Bus 2D

C. ✔ Backup DC;
600V Bus 2C

D. Backup DC;
600V Bus 2D

Description:

The graphic provided indicates that the normal power supply from the battery charger via 600VAC Bus 2D is no longer available to provide power to the Vital AC bus. Vital AC will then transfer to its first alernate power supply, Vital AC Batteries. If battery voltage drops below 208 VDC, the alternate power supply from 600 VAC Essential Bus "C" will automatically pick up the Vital AC Bus.

Normal supply is 600V 2D via the battery charger, then to the Batteries until battery voltage drops below 208 VDC then transfers to Alternate (600V 2C).

K/A JUSTIFICATION:

This question satisfies the K/A statement by requiring the applicant to determine the power supply to Vital AC which based on plant conditions has transferred power from Normal (preferred) to batteries (First Alternate).

The "A" distractor is plausible if the applicant remembers that 600V 2D is a power supply to Vital AC but does not remember the correct bus transfer sequence; incorrect-[Normal (600V 2D) to Alternate (600V 2C) to Batteries] versus the correct-[Normal (600V 2D) to Batteries to Alternate (600V 2C).] The second part is plausible since it is correct.

The "B" distractor is plausible if the applicant remembers that 600V 2D is a power supply to Vital AC but does not remember the correct bus transfer sequence; incorrect-[Normal (600V 2D) to Alternate (600V 2C) to Batteries] versus the correct-[Normal (600V 2D) to Batteries to Alternate (600V 2C).] The second part is plausible if the applicant remembers that 600V 2D is a power supply to Vital AC and would be correct if asking for the Vital AC Normal power source.

The "D" distractor is plausible since the first part is correct. The second part is plausible if the applicant remembers that 600V 2D is a power supply to Vital AC and would be correct if asking for the Vital AC Normal power source.

A. **Incorrect** - See description above.

B. **Incorrect** - See description above.

C. **Correct** - See description above.

D. **Incorrect** - See description above.

References:
NONE

K/A:

262002 Uninterruptable Power Supply (A.C./D.C.)

K4. Knowledge of UNINTERRUPTABLE POWER SUPPLY (A.C./D.C.) design feature(s) and/or interlocks which provide for the following: (CFR: 41.7)

K4.01 Transfer from preferred power to alternate power supplies 3.1 3.4

LESSON PLAN/OBJECTIVE:

R25-ELECT-LP-02705, Vital AC Electrical System, **Ver. 3.0**, EO 200.020.A.05

References used to develop this question:

34SO-R25-002-2, 120/240 Volt Vital AC System, **Ver. 5.2**
34AR-651-133-2, 240V Vital AC Batt Volts Low, **Ver. 1.0**
34AR-651-134-2, Vital AC Sys Trouble, **Ver. 1.2**

30. 263000G2.1.19 001/05601SPDS/056.002.C.03/MOD/SYS-I/BOTH/263000G2.1.19/2/1/H/2/JSC/ELJ

Unit 2 was operating at 100% RTP when an event occurred resulting in an electrical power supply de-energizing.

While monitoring SPDS, the following indications exist on the PCIS Diagnostic Groups 1, 3, 4, & 5 Status screen;

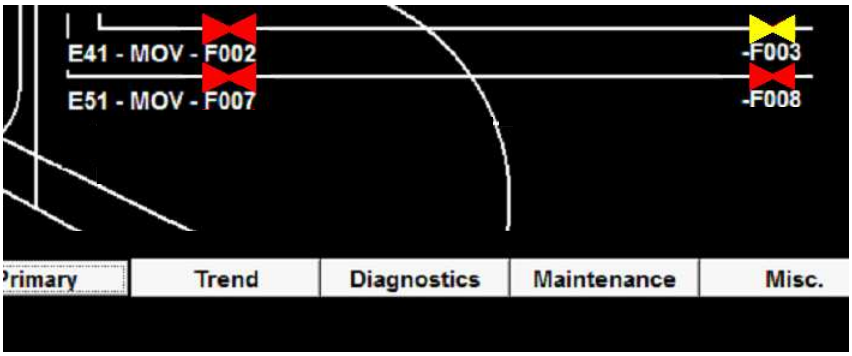

Based on the above SPDS indications,

A loss of _____ has occurred.

If HPCI receives a valid initiation signal, HPCI _____ start and inject into the RPV.

A. 600V Rx. Bldg. MCC 2B, 2R24-S011A;
will

B. 600V Rx. Bldg. MCC 2B, 2R24-S011A;
will NOT

C. 250 VDC MCC 2B, 2R24-S022;
will

D✓ 250 VDC MCC 2B, 2R24-S022;
will NOT

Description:

Per 34SO-X75-002-2, Operation of SPDS Equipment, Attachment 4:

3. For valves:
   a. Green - closed.
   b. Red - open.
   c. Red and Green - in transit.
   d. Yellow - valve position data not available.

The SPDS indication for the PCIVs will turn yellow when the valve position is not available (i.e. power loss). 2E41-F003 has lost power. Its power supply is 2R24-S022. The loss of 2R24-S022 also removes power from the HPCI aux oil pump therefore the HPCI system will not start on an initiation signal.

K/A JUSTIFICATION:

This question satisfies the K/A statement by requiring the applicant to know how the SPDS computer monitors the status of the PCIVs and how the indications will change based on loss of power.

The "A" distractor is plausible since this is the power supply for the inboard isolation valve for HPCI. The second part is plausible since if HPCI was already operating, it would continue to operate (aux oil pump shuts off once sufficient pressure is obtained based on a shaft driven oil pump).

The "B" distractor is plausible since this is the power supply for the inboard isolation valve for HPCI. The second part is plausible since it is correct.

The "C" distractor is plausible since the first part is correct. The second part is plausible since if HPCI was already operating, it would continue to operate (aux oil pump shuts off once sufficient pressure is obtained based on a shaft driven oil pump).

A. **Incorrect** - See description above.

B. **Incorrect** - See description above.

C. **Incorrect** - See description above.

D. **Correct** - See description above.

References:
NONE

K/A:

263000 D.C. Electrical Distribution

G2.1.19 Ability to use plant computers to evaluate system or component status.
(CFR: 41.10 / 45.12) 3.9 3.8

LESSON PLAN/OBJECTIVE:

X75-SPDS-LP-05601, Safety Parameter Display System, **Ver 6.1**, EO 056.002.C.03

References used to develop this question:

34SO-X75-002-2, Operation of SPDS Equipment, **Ver 4.0**

Modified from HLT Database Q#206000-010

Original Question

Unit 2 HPCI is being operated in the CST to CST mode for testing.

- o A loss of Station Service 250VDC "2B" 2R24-S022 occurs
- o One (1) minute later, Drywell pressure increases to 2.1 psig

The valve position indicating lights on 2H11-P601 for HPCI Steam Supply Isolation Valve, 2E41-F001, will be _____ .

HPCI will _____ .

A. lit;
remain in CST to CST mode

B. lit;
inject to the core

C.✓ extinguished;
remain in CST to CST mode

D. extinguished;
inject to the core

31. 263000K5.01 001/02704R42/027.044.A.03/MOD/SYS-B/BOTH/263000K5.01/2/1/F/3/ARB/ELJ

Unit 2 is operating at 100% RTP with the "2A" and "2B" 125/250VDC Station Service Batteries on "Equalize" charge.

Subsequently,

- All Control Building Chillers and fans trip and can NOT be restored
- Control Building temperatures start increasing

With the "2A" and "2B" 125/250VDC Station Service Batteries on "Equalize" charge, the 125/250VDC Station Service Battery Chargers output voltage will be _____ the battery voltage.

With Control Building temperatures increasing and NO operator actions, the 125/250VDC Station Service Battery _____ .

A. equal to;
Room Hydrogen concentrations will rise in each of the battery rooms

B. equal to;
Chargers will trip when their high temperature trip setpoint is reached

C.✔ greater than;
Room Hydrogen concentrations will rise in each of the battery rooms

D. greater than;
Chargers will trip when their high temperature trip setpoint is reached

Description:

Battery chargers can be supplying a float or equalizing charge for the batteries during their normal lineup. If a battery is on a float charge, the battery chargers output voltage is equal to the battery voltage and the battery is “floating” on the system. The battery charger is supplying enough output to equal the load on the bus with current input and output from the battery equal.

If a battery is on an equalizing charge, the battery charger output voltage is elevated slightly over battery voltage, with voltage input to the battery greater than the output. In this case, the battery acts as a load on the battery charger. An equalizing charge brings the battery up to a fully charged condition.

A ventilation system in each battery room prevents a buildup of combustible gases and helps ensure operation during emergency conditions. With a loss of CR ventilation and battery chargers in service, then the Emergency Exhaust Fans must be started to prevent hydrogen buildup. The battery chargers have an alarm on high temperatures but have internal fans that keep them cool. Also, the battery chargers do NOT have a high temperature trip.

K/A JUSTIFICATION:

This question satisfies the K/A statement by requiring the applicant to determine that during the time the batteries are being charged (equalized) and with the loss of normal ventilation, the station service battery rooms will be experiencing higher than normal concentrations of hydrogen.

The "A" distractor is plausible if the applicant thinks about a float charge instead of an equalize charge on the batteries. In this case the applicant will think that since the chargers are on equalize that the voltages must be equal. The second part is correct since it is correct.

The "B" distractor is plausible if the applicant thinks about a float charge instead of an equalize charge on the batteries. In this case the applicant will think that since the chargers are on equalize that the voltages must be equal. The second part is plausible if the applicant remembers the battery chargers have a high temperature alarm but forgets that they do not have a high temperature trip and thinks the chargers will trip.

The "D" distractor is plausible since the first part is correct. The second part is plausible if the applicant remembers the battery chargers have a high temperature alarm but forgets that they do not have a high temperature trip and thinks the chargers will trip.

A. **Incorrect** - See description above.

B. **Incorrect** - See description above.

C. **Correct** - See description above.

D. **Incorrect** - See description above.

References:

NONE

K/A:

263000 D.C. Electrical Distribution

K5. Knowledge of the operational implications of the following concepts as they apply to D.C. ELECTRICAL DISTRIBUTION : (CFR: 41.5 / 45.3)

K5.01 Hydrogen generation during battery charging. 2.6 2.9

LESSON PLAN/OBJECTIVE:

R42-ELECT-LP-02704, DC Electrical Distribution, **Ver. 7.1**, EO 027.044.A.03

References used to develop this question:

34SO-R42-001-2, 125 VDC & 125/250 VDC System, **Ver. 7.15**
34AR-654-040-2, Battery Room Exh Fan C015 Flow Low, **Ver. 3.0**
34AR-657-028-2, Battery Room Exh Fan C014 Flow Low, **Ver. 2.0**

Modified from HLT 2012-301 NRC Exam Q#32

Original Question

Unit 2 is operating at 100% power, with the "2A" and "2B" 125/250VDC Station Service Batteries on equalize charge.

- o All Control Building Chillers and fans trip and can NOT be restored
- o Control Building temperatures start increasing

Which ONE of the following completes both statements concerning the effect of charging the batteries with the above conditions present and any required actions to mitigate the consequences of the event?

With the above conditions, _____ .

To mitigate the consequences of this event, the operator will enter _____ .

A.✓ Hydrogen concentration will rise in the battery rooms;

34AB-T41-001-2, "Loss Of ECCS, MCREC Or Area Ventilation Systems" and start Emergency Exhaust Fans 2Z41-C014 and 2Z41-C015

B. Hydrogen concentration will rise in the battery rooms;

34SO-R42-001-2, "125 VDC AND 125/250 VDC SYSTEM", and secure all the battery chargers

C. the Battery Chargers will trip when their high temperature trip setpoint is reached;

34AB-T41-001-2, "Loss Of ECCS, MCREC Or Area Ventilation Systems" and start Emergency Exhaust Fans 2Z41-C014 and 2Z41-C015

D. the Battery Chargers will trip when their high temperature trip setpoint is reached;

34SO-R42-001-2, "125 VDC AND 125/250 VDC SYSTEM", and secure all the battery chargers

32. 264000A3.06 001/03301P41/033.003.A.04/MOD/SYS-B/BOTH/264000A3.06/2/1/F/3/JSC/ELJ

Unit 1 and **Unit 2** are operating at 100% RTP when a TOTAL Loss Of Offsite Power (LOSP) occurs.

The Diesel Gen 1B Keylock control switch is in the REMOTE UNIT 1 position.

With the above conditions,

The automatic start of the Standby Diesel Service Water Pump, 2P41-C002, can be monitored for operation at _____ .

INITIALLY, the Standby Diesel Service Water Pump, 2P41-C002 will be powered via 4160V _____ .

A. 2H11-P652 ONLY;
1F

B. 2H11-P652 ONLY;
2F

C.✔ 2H11-P652 and 1H11-P652;
1F

D. 2H11-P652 and 1H11-P652;
2F

Description:

The Standby Diesel Service Water pump can be monitored in four locations. These locations are 1H11-P652, 2H11-P652, 1B EDG room, and locally at pump. 1H11-P652 and 2H11-P652 have a pressure gauge (vertical section) and a indicating light with control switch.
The STANDBY DIESEL SERVICE WATER PUMP is located in the intake structure on the pump deck between the Unit 1 and Unit 2 RHR Service Water Strainers along the north wall. The pump provides cooling water (normal source) to the "1B" Diesel Generator coolers and is a centrifugal pump rated at 700 gpm at 232' TDH. The pump is a powered from 600/208 MCC 1B ESS Div B (1R24-S026). Either Unit can supply power to 1R24-S026 from 4160 VAC bus "1F" or "2F". The normal power supply to 1R24-S026 is from 4160 VAC 1F. 1R24-S026 will transfer over to 4160 VAC 2F upon a loss of site power to the 4160 VAC 2F bus.

Per Attachment 3 of 34AB-R43-001-2, on a complete Loss of Site Power, the Unit that will receive the 1B EDG depends upon the switch position for the EDG in the 1B EDG room. The Select Switch is Normally aligned to Unit 1 per procedure.

Unit 2	LOSP	-----	Unit 1
Unit 2	-----	LOSP	Unit 2
Unit 1	LOCA	-----	Neither
Unit 2	-----	LOCA	Neither
Unit 1	LOCA/LOSP	-----	Unit 1
Unit 1	-----	LOCA LOSP	Unit 2
Unit 2	LOCA/LOSP	-----	Unit 1
Unit 2	-----	LOCA/LOSP	Unit 2
Unit 1	LOCA/LOSP	LOSP	Unit 1
Unit 1	LOSP	LOCA/LOSP	Unit 2
Unit 2	LOCA/LOSP	LOSP	Unit 1
Unit 2	LOSP	LOCA/LOSP	Unit 2
Either Unit	**LOCA/LOSP**	**LOCA/LOSP**	**Neither**
Unit 1	LOSP	LOCA	Unit 1
Unit 2	LOCA	LOSP	Unit 2
Unit 1	**LOSP**	**LOSP**	**Unit 1**
Unit 2	**LOSP**	**LOSP**	**Unit 2**
Unit 1	LOCA	LOSP	Unit 2
Unit 2	LOSP	LOCA	Unit 1

K/A JUSTIFICATION:

This question satisfies the K/A statement by requiring the applicant to determine what the cooling supply to EDG 1B will be during automatic operation.

The "A" distractor is plausible since it is partially correct. The standby diesel service water pump can be monitored at 1H11-P652 and 2H11-P652. The applicant may think that it can be only monitored on 2H11-P652 since the pump is labeled 2P41-C002. The second part is plausible since it is correct.

The "B" distractor is plausible since it is partially correct. The standby diesel service water pump can be monitored at 1H11-P652 and 2H11-P652. The applicant may think that it can be only monitored on 2H11-P652 since the pump is labeled 2P41-C002. The second part is plausible if Unit 2 were to receive a LOCA signal combined with the LOSP (since both have a LOSP). Also would be plausible if the Diesel Gen 1B Keylock control switch was positioned to the REMOTE UNIT 2 position.

The "D" distractor is plausible since the first part is correct. The second part is plausible if Unit 2 were to receive a LOCA signal combined with the LOSP (since both have a LOSP). Also would be plausible if the Diesel Gen 1B Keylock control switch was positioned to the REMOTE UNIT 2 position.

A. **Incorrect** - See description above.

B. **Incorrect** - See description above.

C. **Correct** - See description above.

D. **Incorrect** - See description above.

References:
NONE

K/A:

264000 Emergency Generators (Diesel/Jet)

A3. Ability to monitor automatic operations of the EMERGENCY GENERATORS (DIESEL/JET) including: (CFR: 41.7 / 45.7)

A3.06 Cooling water system operation 3.1 3.2

LESSON PLAN/OBJECTIVE:

P41-PSW-LP-03301, Plant Service Water System, **Ver 10.3**, EO 033.003.A.02 and 033.003.A.04

References used to develop this question:

34SO-R43-001-1, Diesel Generator Standby AC System, **Ver 27.0**
34AB-R43-001-2, Diesel Generator Recovery, **Ver 3.4**

Modified from HLT Database Q#264000K1.04-001 which was used on
2012-301 NRC Exam Q#31

Original Question

Unit 1 and Unit 2 are experiencing a TOTAL loss of Off-Site power.

The Diesel Gen 1B Keylock control switch is in the REMOTE UNIT 1 position.

Subsequently, **Unit 2** receives a LOCA signal.

Which ONE of the following identifies the Emergency Bus being powered from, and the cooling water supply to, 1B Emergency Diesel Generator (EDG)?

1B EDG is powering 4160 V _____ Emergency Bus

1B EDG is receiving cooling water from _____ .

A. 1F;
2P41-C002, Standby Diesel Service Water Pump

B. 1F;
Unit 1 Division 1 Plant Service Water

C.✓ 2F;
2P41-C002, Standby Diesel Service Water Pump

D. 2F;
Unit 1 Division 1 Plant Service Water

33. 271000K4.01 001/03101N62/031.001.A.13/MOD/SYS-B/BOTH/271000K4.01/2/2/F/3/ARB/ELJ

Unit 2 is starting up from an outage with the Off-Gas System being purged.

The following Off-Gas System Loop Seal Isolation valves are in the OPEN position;

- o 2N62-F085, Holdup Line Drain
- o 2N62-F030A, Cndsr/Sep A Drain
- o 2N62-F030B, Cndsr/Sep B Drain

The **Unit 2** Off-Gas System is purged with Service Air for a minimum of one (1) hour prior to placing the system in operation to _____ .

While purging the Off-Gas System, if the Off-Gas System pressure increases to 8 psig, IAW 34SO-N61-001-2, Main Condenser Vacuum System And Closeout, the Off-Gas System Loop Seals Isolation valves are required to be _____ .

A. ✓ dilute any hydrogen left in the system from previous use; manually isolated

B. dilute any hydrogen left in the system from previous use; confirmed to have automatically isolated

C. remove any radioactive Iodine deposited on the charcoal adsorbers; manually isolated

D. remove any radioactive Iodine deposited on the charcoal adsorbers; confirmed to have automatically isolated

Description:

The Off Gas System is purged for one hour with air prior to use to **dilute any Hydrogen** left from previous use. The purge also provides flow through the recombiner while heating to 350°F to ensure that it is free of moisture.

IAW 34SO-N61-001-2, Main Condenser Vacuum System And Closeout, if pressure increases to greater than 6 psig on 2N62-R600, O/G To Prehtr, THEN close the following Loop Seal Isolation Valves: 2N62-F085, Holdup Line Drain, 2N62-F030A, Cndsr/Sep A Drain, 2N62-F030B, Cndsr/Sep B Drain. These valves are manually operated on Panel 2N62-P600.

K/A JUSTIFICATION:

This question satisfies the K/A statement by requiring the applicant to determine the reason (design) to purge with service air the hydrogen from the Off Gas System for the dilution of hydrogen gas. Also the design feature to isolate the loop seals if Off Gas pressure exceeds 6 psig preserving the loop seals.

The "B" distractor is plausible since the first part is correct. The second part is plausible if the applicant remembers that these valves will automatically close on certain Off Gas System parameters and thinks the loop seals will automatically isolate on >6 psig.

The "C" distractor is plausible if the applicant remembers that radioactive Iodine is deposited onto the charcoal adsorbers and exchanged with nonradioactive Iodine and thinks purging with air will remove it. The radioactive iodine on the adsorbers will not be removed by purging with air and will normally be removed when the charcoal in the adsorber is replaced. The second part is plausible since it is correct.

The "D" distractor is plausible if the applicant remembers that radioactive Iodine is deposited onto the charcoal adsorbers and exchanged with nonradioactive Iodine and thinks purging with air will remove it. The radioactive iodine on the adsorbers will not be removed by purging with air and will normally be removed when the charcoal in the adsorber is replaced. The second part is plausible if the applicant remembers that these valves will automatically close on certain Off Gas System parameters and thinks the loop seals will automatically isolate on >6 psig.

A. **Correct** - See description above.

B. **Incorrect** - See description above.

C. **Incorrect** - See description above.

D. **Incorrect** - See description above.

References:
NONE

K/A:

271000 Offgas System

K4. Knowledge of OFFGAS SYSTEM design feature(s) and/or interlocks which provide for the following: (CFR: 41.7)

K4.01 Dilution of hydrogen gas concentration 2.9 3.3

LESSON PLAN/OBJECTIVE:

N62-OG-LP-03101, Off Gas System, **Ver. 6.0**, EO 031.001.A.13 and EO 031.001.A.14

References used to develop this question:

34SO-N61-001-2, Main Condenser Vacuum System And Closeout, **Ver. 21.6**
34SO-N62-001-2, Off Gas System, **Ver. 21.1**

Modified from HLT Database Q#LT-031001-011

Original Question

Which ONE of the choices below describes the reason for air purging the Off-Gas system for one hour prior to placing the system in operation?

A. To provide cooling air to the hydrogen recombiner.

B.✓ To dilute any hydrogen left in the system from previous use.

C. To provide cooling air to the post treatment radiation monitors.

D. To remove any radioactive Iodine deposited on the charcoal adsorbers

34. 272000A3.02 001/10007D11/200.030.A.05/BANK/SYS-B/BOTH/272000A3.02/2/2/F/2/JSC/ELJ

Which ONE of the choices below is the set of conditions which will cause an automatic isolation of the **Unit 2** Main Stack Isolation valve, 2N62-F057?

Post Treatment Radiation Monitor channel "A" is _____ , AND

Post Treatment Radiation Monitor channel "B" is _____ .

A. ✔ INOP;
DOWNSCALE

B. INOP;
HIGH

C. HIGH;
DOWNSCALE

D. HIGH;
HIGH

Description:

If a Hi-Hi-Hi, Inop or Downscale condition occurs on both Offgas Post Treatment Radiation detectors, then the following valves close:

Offgas Stack Isolation Valve, 2N62-F057
Offgas Cooler Condenser/Moisture Separator Valves 2N62-F030A and B
Offgas Holdup Line Drain, 2N62-F085

For a trip to occur and the Offgas system to isolate, both detectors must have any combination of Hi-Hi-Hi, Downscale, or Inop alarms

If a Hi alarm is received on either detector, then the carbon bed bypass valve, 2N62-F043, closes and the carbon bed inlet valve, 2N62-F042, opens.

K/A JUSTIFICATION:

This question satisfies the K/A statement by requiring the applicant to know the automatic closure of 2N62-F057, Offgas Stack Isolation Valve based upon Post Treatment Radiation monitors.

The "B" distractor is plausible since the first part is correct. The second part is plausible since a HI alarm will cause 2N62-F043 to close and 2N62-F042 to open.

The "C" distractor is plausible since a HI alarm will cause 2N62-F043 to close and 2N62-F042 to open. The second part is plausible since it is correct.

The "D" distractor is plausible since a HI alarm will cause 2N62-F043 to close and 2N62-F042 to open. The second part is plausible since a HI alarm will cause 2N62-F043 to close and 2N62-F042 to open.

A. **Correct** - See description above.

B. **Incorrect** - See description above.

C. **Incorrect** - See description above.

D. **Incorrect** - See description above.

References:
NONE

K/A:

272000 Radiation Monitoring System

A3. Ability to monitor automatic operations of the RADIATION MONITORING SYSTEM including: (CFR: 41.7 / 45.7)

A3.02 Offgas system isolation indications 3.6 3.7

LESSON PLAN/OBJECTIVE:

D11-PRM-LP-10007, Process Radiation Monitors, **Ver 5.0**, EO 200.030.A.05

References used to develop this question:

34SO-N62-001-2, Off Gas System, **Ver 21.1**

Bank question LT-200030-005 from HLT Database

35. 288000K1.04 001/01303T41/037.004.A.01/BANK/SYS-B/BOTH/288000K1.04/2/2/F/3/ARB/ELJ

On **Unit 1**,

Cooling water to the Safeguard Equipment Cooling (SEC) coolers is supplied by the _____ System.

Cooling water to the Main Control Room Air Conditioning Unit Condensers is supplied by the _____ System.

A. Reactor Building Chilled Water;
Plant Service Water

B. Reactor Building Chilled Water;
Control Building Chilled Water

C. ✔ Plant Service Water;
Plant Service Water

D. Plant Service Water;
Control Building Chilled Water

Description:

Cooling Water Systems

The Plant Service Water System provides cooling for the SEC Coolers on BOTH units provides cooling water to the Main Control Room Air Conditioning Units (MCREC).

K/A JUSTIFICATION:

This question satisfies the K/A statement by requiring the applicant to know the cooling water (PSW) interface (physical connection) of the SEC coolers and the Main Control Room Air Conditioning Units (MCREC). Both sets of coolers are part of the Plant Ventilation System.

The "A" distractor is plausible since Reactor Building Chill Water supplies cooling water to the ventilation coolers inside the Reactor Building where the SEC coolers are also located in the Reactor Building. The second part is plausible since it is correct.

The "B" distractor is plausible since Reactor Building Chill Water supplies cooling water to the ventilation coolers inside the Reactor Building where the SEC coolers are also located in the Reactor Building. The second part is plausible if the applicant remembers Control Building Chilled Water cools ventilation in the Control Building such as Vital AC rooms on both Units. Since the Main Control Room is located in the Control Building, the applicant may think then Control Building Chill Water instead of PSW.

The "D" distractor is plausible since the first part is correct. The second part is plausible if the applicant remembers Control Building Chilled Water cools ventilation in the Control Building such as Vital AC rooms on both Units. Since the Main Control Room is located in the Control Building, the applicant may think then Control Building Chill Water instead of PSW.

A. **Incorrect** - See description above.

B. **Incorrect** - See description above.

C. **Correct** - See description above.

D. **Incorrect** - See description above.

References:
NONE

K/A:

288000 Plant Ventilation Systems

K1. Knowledge of the physical connections and/or cause-effect relationships between PLANT VENTILATION SYSTEMS and the following:
(CFR: 41.2 to 41.9 / 45.7 to 45.8)

K1.04 Applicable component cooling water system: Plant-Specific 2.6 2.6

LESSON PLAN/OBJECTIVE:

T41-SC HVAC-LP-01303, Secondary Containment HVAC Systems, **Ver. 5.1**, EO 037.004.A.01

References used to develop this question:

36. 290001A4.02 001/00301G31/003.002.A.10/NEW/P-AB/BOTH/290001A4.02/2/2/F/2/JSC/ELJ

Unit 1 is operating at 100% RTP with RWCU Pump 1A in service.

NPOs in the Main Control Room, monitoring the RWCU System, observe the following:

Time	RWCU HX Room Temp	RWCU Pump 1A Room Temp
10:55	125°F	125°F
11:00	145°F	145°F
11:05	168°F	168°F

Based on the above conditions,

When the RWCU Room temperatures reached their isolation setpoint, the RWCU System should have automatically isolated _____ .

The EARLIEST listed time that the NPO is procedurally required to manually isolate the RWCU System is _____ .

A. ✔ immediately;
11:00

B. immediately;
11:05

C. after a time delay;
11:00

D. after a time delay;
11:05

Description:

1G31-F001, RWCU Inboard Isolation, AND 1G31-F004, RWCU Outboard Isolation, CLOSE on the following signals:

- Low Reactor water level, -35 inches.
- High differential flow, 56 gpm for 42.5 sec.
- High RWCU area ventilation differential temperature.
  - RWCU Pump Room 60°F
  - RWCU Hx Room 45°F
  - RWCU Phase Separator Room 40°F
- High RWCU area ambient temperature.
  - RWCU Pump Room 140°F (Annunciated at 130°F)
  - RWCU Hx Room 140°F (Annunciated at 130°F)
  - RWCU Phase Separator Room 140°F (Annunciated at 130°F)

K/A JUSTIFICATION:

This question satisfies the K/A statement by requiring the applicant to know the Group 5 isolation signals associated with room ventilation temperatures.

The "B" distractor is plausible since the first part is correct. The second part is plausible if the applicant thinks about the HPCI or RCIC room high temperature isolation (165°F) instead of the RWCU room temperature isolation (140°F).

The "C" distractor is plausible if the applicant remembers the time delay associated with the High Differential Flow isolation (56 gpm for 42.5 seconds) instead of the High Ambient temperature isolation. The applicant also may think about the HPCI/RCIC high temperature isolation signals (29 min/14 min). The second part is plausible since it is correct.

The "D" distractor is plausible if the applicant confuses the time delay associated with the High Differential Flow isolation (56 gpm for 42.5 seconds) with that of the High Ambient temperature isolation. The applicant also may think about the HPCI/RCIC high temperature isolation signals (29 min/14 min). The second part is plausible if the applicant thinks about the HPCI or RCIC room high temperature isolation (165°F) instead of the RWCU room temperature isolation (140°F).

A. **Correct** - See description above.

B. **Incorrect** - See description above.

C. **Incorrect** - See description above.

D. **Incorrect** - See description above.

References:
NONE

K/A:

290001 Secondary Containment

A4. Ability to manually operate and/or monitor in the control room:
(CFR: 41.7 / 45.5 to 45.8)

A4.02 Reactor building area temperatures: Plant-Specific 3.3 3.4

REPLACED THE BELOW K/A AFTER PHONE CONVERSATION WITH CHIEF EXAMINER PHIL CAPEHART ON 9/17/2014.

A4. Ability to manually operate and/or monitor in the control room:
(CFR: 41.7 / 45.5 to 45.8)

A4.04 Auxiliary building area temperature: Plant-Specific 2.6* 2.7

LESSON PLAN/OBJECTIVE:

G31-RWCU-LP-00301, Reactor Water Cleanup, **Ver 5.2**, EO 003.002.A.10

References used to develop this question:

34SO-G31-003-1, Reactor Water Cleanup System, **Ver 42.5**
34SO-E41-001-1, High Pressure Coolant Injection (HPCI) System, **Ver 28.1**
34SO-E51-001-1, Reactor Core Isolation Cooling, (RCIC) System, **Ver 28.0**

37. 295001AA2.06 001/00401B31/200.037.A.02/MOD/SYS-I/BOTH/295001AA2.06/1/1/H/3/ARB/ELJ

A **Unit 2** startup is in progress IAW 34GO-OPS-001-2, Plant Startup.

The following sequence of events occur:

- o Both Recirc Pump speeds were raised from minimum speed to 30%
- o After the Recirc Pump speeds were raised, ASD 2A tripped

With the above current conditions,

To manually calculate core flow rate, Loop "A" Jet Pump flow, 2B21-R611A, must be _____ Loop B Jet Pump Flow, 2B21-R611B.

Core Flow Recorder, 2B21-R613, _____ be indicating accurate core flow.

A. subtracted from;
will NOT

B. subtracted from;
will

C. ✔ added to;
will NOT

D. added to;
will

Description:

During single loop operation (sensed by the "ASD Not Running" status provided by the Recirc NXG computer), when the speed of the running pump decreases below approximately 35% speed, positive flow through the idle pump loop due to natural circulation overcomes the negative flow due to reverse flow. The total core flow summing circuitry will continue to subtract this positive idle loop flow from the running loop flow and give a misleading LOW core flow indication. Total Core Flow can be calculated by adding the JET PUMP LOOP “A” AND the JET PUMP LOOP “B” flows. (Convert to % core flow by dividing total core flow by 77 Mlbm/hr).

K/A JUSTIFICATION:

This question satisfies the K/A statement by requiring the applicant to determine if the Core Flow Recorder 2B21-R613, (Nuclear Boiler Instrument) is accurate based on Loop A & B Jet Pump Flows and the speed of the operating Recirc pump. After the applicant makes this determination, the correct method of determing accurate core flow using Loop Jet pump flows is established.

The "A" distractor is plausible if the applicant remembers that Loop A & B flows are always automatically subtracted when one Recirc pump is in service to obtain an accurate core flow and would be correct if the running Recirc pump speed was higher than 35%. The second part is plausible since it is correct.

The "B" distractor is plausible if the applicant remembers that Loop A & B flows are always automatically subtracted when one Recirc pump is in service to obtain an accurate core flow and would be correct if the running Recirc pump speed was higher than 35%. The second part is plausible if the applicant does not consider < 35% running Recirc speed and the natural circulation effect on core flow indication. In this case the applicant will think the recorder is accurate.

The "D" distractor is plausible since the first part is correct. The second part is plausible if the applicant does not consider < 35% running Recirc speed and the natural circulation effect on core flow indication. In this case the applicant will think the recorder is accurate.

A. **Incorrect** - See description above.

B. **Incorrect** - See description above.

C. **Correct** - See description above.

D. **Incorrect** - See description above.

References:
NONE

K/A:

295001 Partial or Complete Loss of Forced Core Flow Circulation

AA2. Ability to determine and/or interpret the following as they apply to PARTIAL OR COMPLETE LOSS OF FORCED CORE FLOW CIRCULATION : (CFR: 41.10 / 43.5 / 45.13)

AA2.06 Nuclear boiler instrumentation 3.2 3.3

LESSON PLAN/OBJECTIVE:

B31-RRS-LP-00401, Reactor Recirculation System, **Ver. 10.5**, EO 200.037.A.02

References used to develop this question:

34SO-B31-001-2, Reactor Recirc System, **Ver. 44.6**, P&L 5.1.5
34AR-602-127-2, Recirc Loop A Out Of Service, **Ver. 3.0**
34SV-SUV-023-2, Jet Pump & Recirc Flow Mismatch Operability, **Ver. 7.15**

Modified from HLT Database Q#295001AK1.01-002

ORIGINAL QUESTION

A **Unit 2** startup is in progress in accordance with 34GO-OPS-001-2, Plant Startup.

The following sequence of events occur:

- Both Recirc Pump speeds were raised from minimum speed to 30%
- After the recirc pump speeds were raised, the 2A ASD tripped.

Five minutes after the ASD trip, the following control panel indications exist:

- Annunciator "RECIRC LOOP A OUT OF SERVICE" (602-127) in alarm
- Core Flow Recorder 2B21-R613 7.2 Mlb/hr
- Loop A Jet Pump Flow 2B21-R611A 5.6 Mlb/hr
- Loop B Jet Pump Flow 2B21-R611B 12.8 Mlb/hr

Given these current conditions, which ONE of the choices below is correct?

A.✓ Core Flow recorder indication is NOT correct.
"A" and "B" jet pump flows should be summed to obtain an accurate core flow rate.

B. Core Flow recorder indication is NOT correct.
"A" jet pump flow must be added to the recorder flow to obtain an actual core flow rate.

C. Core Flow recorder indication is correct.
"A" jet pump flow is being subtracted.

D. Core Flow recorder indication is correct.

"A" jet pump flow is NOT being subtracted.

38. 295003AK2.04 001/03301P41/033.002.A.03/BANK/SYS-I/BOTH/295003AK2.04/1/1/H/3/JSC/ELJ

Unit 1 was operating at 100% RTP when a Loss of Offsite Power occurred.

The following conditions exist:

- o "1E" 4160 VAC Bus ..... DE-ENERGIZES and remains de-energized
- o "1F" 4160 VAC Bus ..... ENERGIZED
- o "1G" 4160 VAC Bus ..... DE-ENERGIZES and remains de-energized

With NO operator actions and based on the above conditions,

The PSW System WILL supply cooling water to the Reactor Building _____ .

The TOTAL number of PSW pumps supplying cooling water to these buildings is _____ .

A. and Diesel Building ONLY;
one (1)

B. and Diesel Building ONLY:
two (2)

C. Turbine Building and Diesel Building;
one (1)

D. ✓ Turbine Building and Diesel Building;
two (2)

Description:

The Turbine Building Isolation Valves (two valves in series in each division header) isolate on any of the following:

A signal from either Core Spray System LOCA logic Div 1 or Div 2. (-101" RWL or 1.85 psig D/W pressure)
LOSP - The valves will close <u>after power is restored to the valves</u>. <u>During the power loss, the valves remain in the open position because they are MOVs and have no power to reposition.</u>
Condenser Room Flooding - Level switches are located in the Cond Bay floor with a small dam around each switch. The switches will pick up if water level increases to 3" above the floor level. There is a keylock override switch (one per division) in the Control Room (P652 panel) to override the closure of the TB isolation valves due to a LOCA or LOSP signal.

Power Supplies:

“A” pump - 4160 VAC bus “E” (R22-S005)
“B” pump - 4160 VAC bus “G” (R22-S007)
“C” & “D” pumps - 4160 VAC bus “F” (R22-S006)

With 1E & 1G de-energized, none of the TB isolation valves have power to close, therefore will remain in their normal open position. With 1F energized the 1C & 1D PSW pump will be running supplying water to the Reactor, Turbine and Diesel Generator Buildings.

K/A JUSTIFICATION:

This question satisfies the K/A statement by requiring the applicant to know the response to the partial loss of the emergency buses (loss of E/G) and the affected loads (PSW pumps and Turbine Building Isolation valves P41-F310A-D).

The "A" distractor is plausible since the Turbine Building Isolation Valves do close on a LOSP however power has to be restored before they close automatically. If the valves close, flow will be to the Diesel Building and Reactor Building ONLY. The second part is plausible if the applicant thinks about the power supply for the RHRSW pumps instead of the PSW pumps. THe applicant may also think about 1E or 1G being energized then only one PSW pump would be running.

The "B" distractor is plausible since the Turbine Building Isolation Valves do close on a LOSP however power has to be restored before they close automatically. If the valves close, flow will be to the Diesel Building and Reactor Building ONLY. The second part is plausible since it is correct.

The "C" distractor is plausible since the first part is correct. The second part is plausible if the applicant thinks about the power supply for the RHRSW pumps instead of the PSW pumps. THe applicant may also think about 1E or 1G being energized then only one PSW pump would be running.

A. **Incorrect** - See description above.

B. **Incorrect** - See description above.

C. **Incorrect** - See description above.

D. **Correct** - See description above.

References:
NONE

K/A:

295003 Partial or Complete Loss of A.C. Power

AK2. Knowledge of the interrelations between PARTIAL OR COMPLETE LOSS OF A.C. POWER and the following: (CFR: 41.7 / 45.8)

AK2.04 A.C. electrical loads 3.4 3.5

LESSON PLAN/OBJECTIVE:

P41-PSW-LP-03301, Plant Service Water, **Ver 10.3**, 033.002.A.03 and 033.015.A.02

References used to develop this question:

34AB-R22-002-1, Loss of 4160V Emergency Bus, **Ver 1.10**

Bank question used from HLT Database LT-028025 008

39. 295004AK2.01 001/02704R42/027.044.A.04/MOD/P-NORM/BOTH/295004AK2.01/1/1/H/2/ARB/ELJ

Unit 2 is operating at 70% RTP when the following sequence of events occur:

- o 11:00 - 125/250V DC SWITCHGEAR 2B, 2R22-S017, de-energizes due to a fault
- o 11:10 - 2R22-S017 fault is determined to be one of the previous in service Division II 125 VDC Battery Chargers
- o 11:24 - ALL Division II 125 VDC Battery Charger AC Input and DC Output breakers are placed in the OFF position
- o 11:30 - Maintenance replaces the Division II Battery Fuses and 2R22-S017 is re-energized from the Division II Batteries

IAW 34SO-R42-001-2, 125 VDC & 125/250 VDC System and with the above conditions,

Local manipulation of a Throwover Switch _____ REQUIRED to return the new combination of Division II 125 VDC Battery Chargers to service.

When placing a Battery Charger in service, in order to PREVENT Battery Charger damage, the proper sequence of AC Input and DC Output breaker operation is to FIRST position the _____ breaker to the ON position.

A. is;
AC Input

B. is;
DC Output

C. is NOT;
AC Input

D. is NOT;
DC Output

Description:

There are two throwover switches per division used to determine which chargers are in service and which is in standby. The throwover switches are manually operated, four pole switches, which allows the battery chargers to be rotated to equalize wear. The throwover switches are located in the associated 125/250 VDC Switchgear rooms. Below is a table depicting the throwover switch alignment.

125 VDC Throwover Switch position	2R26-M031C	up	up	down
	2R26-M031D	down	up	down

With 2 chargers normally in service the throwover switches will be aligned for charger output. If one of the in-service chargers is the faulted load the throwover switches will be re-aligned for the new combination of chargers.

The battery chargers on the 125/250 VDC Station Service Power Supply system requires the AC input breaker closed first, then the DC output breaker closed when starting up. The order of breaker operation is to prevent damage to the main control card in the battery charger. The other battery chargers in the various DC systems are started by closing the DC output breaker and then closing the AC input breaker. If the AC input breaker was closed first, the charger sees a zero volts condition on the output and goes to maximum voltage. This could result in an excessive current surge upon closure of the DC output breaker and could result in damage to the battery charger.

K/A JUSTIFICATION:

This question satisfies the K/A statement by requiring the applicant to know how the throwover switches are arranged after a loss of 2R22-S017 DC switchgear and the proper relationship with restoring the individual breakers (AC Input and DC Output) for the new combination of battery chargers.

The "B" distractor is plausible since the first part is correct. The second part is plausible if the applicant remembers there are other battery chargers that are started by closing the DC output breaker and then closing the AC input breaker and thinks this is how the 125/250 Battery Chargers operate.

The "C" distractor is plausible if the applicant does not understand the operation of the DC Throwover Switches and thinks the original alignment does not need to be changed for the 2 Chargers being placed into service. The applicant may also think about how the Fire Protection Diesel pump battery chargers operate. The Fire Protection Diesels are started by one of two 24 VDC batteries and chargers. The normal alignment is to have both chargers in service at all times. There is not a throwover in this system. The second part is plausible since it is correct.

The "D" distractor is plausible if the applicant does not understand the operation of the DC Throwover Switches and thinks the original alignment does not need to be changed for the 2 Chargers being placed into service. The applicant may also think about how the Fire Protection Diesel pump battery chargers operate. The Fire Protection Diesels are started by one of two 24 VDC batteries and chargers. The normal alignment is to have both chargers in service at all times. There is not a throwover in this system. The second part is plausible if the applicant remembers there are other battery chargers that are started by closing the DC output breaker and then closing the AC input breaker and thinks this is how the 125/250 Battery Chargers operate.

A. **Correct** - See description above.

B. **Incorrect** - See description above.

C. **Incorrect** - See description above.

D. **Incorrect** - See description above.

References:
NONE

K/A:

295004 Partial or Complete Loss of D.C. Power

AK2. Knowledge of the interrelations between PARTIAL OR COMPLETE LOSS OF D.C. POWER and the following: (CFR: 41.7 / 45.8)

AK2.01 Battery charger 3.1 3.1

LESSON PLAN/OBJECTIVE:

R42-ELECT-LP-02704, DC Electrical Distribution, **Ver. 7.1**, EO 027.044.A.04

References used to develop this question:

34SO-R42-001-2, 125 VDC & 125/250 VDC System, **Ver. 7.15**
34SO-X43-001-1, Fire Pumps Operating Procedure, **Ver 6.1**

Modified from HLT Database Q#LT-027030-002

Original Question

Which ONE of the choices below correctly describes the proper sequence of component operations that would PREVENT Battery Charger damage when placing a Unit 2, 125 VDC battery charger in service?

A. Place the AC input breaker in the ON position, reposition throwover switches to the required combination of battery chargers, then place the DC output breaker in the ON position.

B. Reposition throwover switches to the required combination of battery chargers, place the DC output breaker in the ON position, then place the AC input breaker in the ON position.

C.✓ Reposition throwover switches to the required combination of battery chargers, place the AC input breaker in the ON position, then place the DC output breaker in the ON position.

D. Place the DC output breaker in the ON position, reposition throwover switches to the required combination of battery chargers, then place the AC input breaker in the ON position.

40. 295005AK3.02 001/00401RRS/004.001.A.11/MOD/P-NORM/BOTH/295005AK3.02/1/1/F/3/JSC/ELJ

Unit 1 is operating late in core life with the EOC RPT breakers in service.

If the Main Turbine trips, the MINIMUM reactor power level which will result in an EOC RPT breaker trip is _____ .

The trip of the EOC RPT breakers is designed to prevent exceeding the _____ limit.

A. 24.0%;
APLHGR

B. 24.0%;
MCPR

C. 27.6%;
APLHGR

D. ✔ 27.6%;
MCPR

Description:

The EOC-RPT instrumentation initiates a recirculation pump trip (RPT) to reduce the peak RPV pressure and power resulting from turbine trip or generator load rejection transients to provide additional margin to core thermal MCPR Safety Limits (SLs). A pressure transient such as a turbine trip without bypass valves could add positive reactivity sufficient to approach MCPR limits. Late in core life control rods are further out resulting in longer scram times. In addition, the core is more reactive due to decrease in the effective delayed neutron fraction, the void coefficient is less negative and control rod worth is less. To limit the reactivity effect due to pump coast-down time during a load reject pressure transient, two RPT (Recirc Pump Trip) breakers have been installed in series between the ASD and the recirc pump motor.
The EOC-RPT breakers are required to open when reactor power is >27.6% during a load reject or turbine trip to prevent approaching the MCPR limit.

K/A JUSTIFICATION:

This question satisfies the K/A statement by requiring the applicant to know the reason for EOC RPT breaker trips as it relates to a turbine trip and safety limits.

The "A" distractor is plausible if the applicant thinks about the thermal power limit concerning TS 3.2.2 Minimum Critical Power Ratio (MCPR) with the turbine trip and EOC RPT breaker trip instead of the reactor power limit for the Safety limit concerning low flow/low pressure conditions. The second part is plausible since this is the reasoning behind the Safety limit for low flow/low pressure conditions.

The "B" distractor is plausible if the applicant thinks about the thermal power limit concerning TS 3.2.2 Minimum Critical Power Ratio (MCPR) with the turbine trip and EOC RPT breaker trip instead of the reactor power limit for the Safety limit concerning low flow/low pressure conditions. The second part is plausible since it is correct.

The "C" distractor is plausible since the first part is correct. The second part is plausible since this is the reasoning behind the Safety limit for low flow/low pressure conditions.

A. **Incorrect** - See description above.

B. **Incorrect** - See description above.

C. **Incorrect** - See description above.

D. **Correct** - See description above.

References:
NONE

K/A:

295005 Main Turbine Generator Trip

AK3. Knowledge of the reasons for the following responses as they apply to MAIN TURBINE GENERATOR TRIP: (CFR: 41.5 / 45.6)

AK3.02 Recirculation pump downshift/trip: Plant-Specific 3.4 3.5

LESSON PLAN/OBJECTIVE:

B31-RRS-LP-00401, Reactor Recirculation System, **Ver 10.5**, EO 004.001.A.11 and EO 004.002.A.06

References used to develop this question:

Modified from HLT 3 audit exam #88

ORIGINAL QUESTION

With the **Unit 1** reactor operating near rated conditions at the end of an operating cycle, the Recirculation System RPT Breakers are discovered to be inoperable.

SELECT the statement that describes the most probable potential effect of the inop RPT Breakers if a Turbine Trip were to occur, and

The EOC-RPT instrumentation is required to be operable when thermal power is greater than or equal to _____ % power.

A. Pressure could exceed the reactor coolant system integrity safety limit.
27.6%

B.✓The MCPR thermal limit may be exceeded.
27.6%

C. The APLHGR thermal limit may be exceeded.
30%

D. Cladding temperature could exceed 1,500 °F followin g the scram.
30%

41. 295006G2.1.31 001/00101C11/001.013.A.07/MOD/SYS-I/BOTH/295006G2.1.31/1/1/H/2/JSC/ELJ

Unit 2 is operating at 100% RTP with the 2C11-F002A, Flow Control Valve, in service.

Subsequently, a transient occurs resulting in RWL lowering to -10 inches (lowest RWL reached) before being restored to normal with Feedwater.

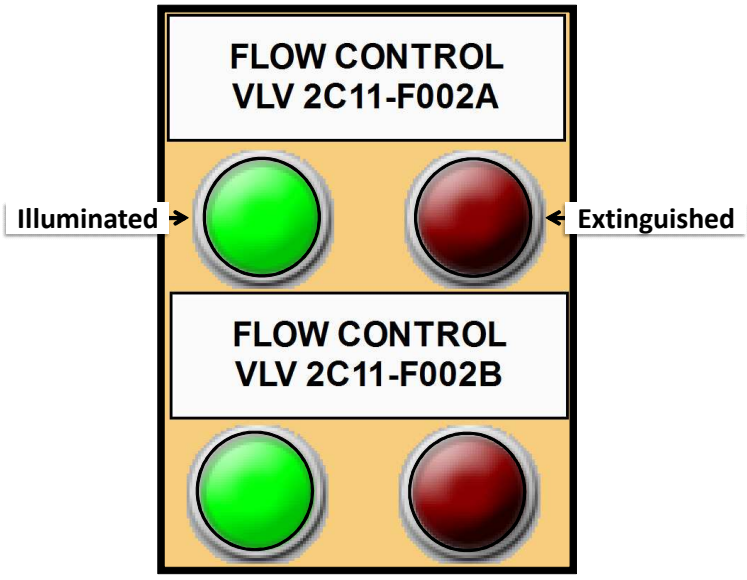

One (1) minute later and based on the above indications/conditions,

2C11-F002A _____ responding correctly.

2C11-F002A indicating LIGHTS are located _____ .

A. is;
2H11-P603 and locally at the 2C82-P001, Remote Shutdown Panel

B. ✔ is;
on 2H11-P603 Panel ONLY

C. is NOT;
2H11-P603 and locally at the 2C82-P001, Remote Shutdown Panel

D. is NOT;
on 2H11-P603 Panel ONLY

Description:

Phil, this was question 3 of 10 of the previously submitted questions. Changes were incorporated based on your ES-401-9 comments.

The cause of the Scram can effect how the system responds. On a NON-LOCA SCRAM, the CRD pumps will remain running and the system will respond as follows: The flow control, valve F002A/B, senses maximum flow and closes. Due to valve construction, 5 gpm is maintained to the CRD system to prevent thermal shock when the scram is reset and flow is returned to the normal flow path. When the Scram is reset, the accumulators will recharge, the Flow Control Valve will open, and the system returns to normal conditions.

The System response for a Scram with a LOCA signal is similar except the CRD pumps will trip and the flow controller will sense no flow, causing the Flow Control Valve (F002) to open fully.

2C11-F002A/B indications are located on 2H11-P603.

K/A JUSTIFICATION:

This question satisfies the K/A statement by requiring the applicant to know the effect of a NON-LOCA scram has on C11-F002A, Flow Control valve and know where the indications exist in the MCR for the flow control valve.

The "A" distractor is plausible since the first part is correct. The second part is plausible since other control rod drive components are located on 2C82-P001, Remote Shutdown Panel (2B CRD pump).

The "C" distractor is plausible if the applicant thinks that the valve should have opened since the flow control valve will sense low flow condition and fail open on a LOCA scram since the CRD pumps will be tripped. The second part is plausible since other control rod drive components are located on 2C82-P001, Remote Shutdown Panel (2B CRD pump).

The "D" distractor is plausible if the applicant thinks that the valve should have opened since the flow control valve will sense low flow condition and fail open on a LOCA scram since the CRD pumps will be tripped. The second part is plausible since it is correct.

A. **Incorrect** - See description above.

B. **Correct** - See description above.

C. **Incorrect** - See description above.

D. **Incorrect** - See description above.

References:
NONE

K/A:

295006 SCRAM

G2.1.31 Ability to locate control room switches, controls, and indications, and to determine that they correctly reflect the desired plant lineup. (CFR: 41.10 / 45.12) 4.6 4.3

LESSON PLAN/OBJECTIVE:

C11-CRD-LP-00101, Control Rod Drive System, **Ver 9.0**, EO 001.013.A.07

References used to develop this question:

34SO-C11-005-2, Control Rod Drive Hydraulic System, **Ver 32.0**

Modified from HLT Database Q#LT-001013-004

Original Question

Unit 1 was operating at 100% RTP when a scram occurred on low Reactor water level (-20" lowest level reached).

Which ONE of the choices below describes the response of the CRD system Flow Control Valve, 1C11-F002A?

The FCV _____ , because (to) _____ .

A.✓ fully closes
it senses high flow to the accumulators

B. slightly closes
return flow rate to its preset value

C. slightly opens to
return flow rate to its preset value

D. fully opens
it senses no CRD system flow

42. 295008G2.1.20 001/01401B21/014.003.A.02/NEW/P-AB/BOTH/295008G2.1.20/1/2/H/2/JSC/ELJ

Unit 2 was operating at 100% RTP when a transient results in the following:

- o RWL increases to 102 inches
- o RPV pressure is 490 psig

A NPO places the control switch for Safety Relief Valve, 2B21-F013M, in the OPEN position.

Based on the above conditions and when 2B21-F013M control switch is placed to OPEN,

INITIALLY, 2B21-F013M will be passing _____ .

2B21-F013M "Amber" indicating light will ILLUMINATE _____ .

A. ✔ steam;
immediately

B. steam;
after several seconds

C. water;
immediately

D. water;
after several seconds

Description:

Each relief valve tailpipe contains two pressure switches. Both of the tailpipe pressure switches provide an input to the Low-low set logic and are set at 85 psig. One pressure switch provides additional inputs to SPDS for SRV position and illuminates an amber light above the relief valve control switch on H11-P602. Actuation of either the temperature or pressure switch indicates that the relief valve may be passing steam to the suppression chamber due to leakage or actuation. The pressure switch may not actuate, or may have a delayed actuation, if the SRV is passing water or 2 phase flow.
Water begins entering the MSLs when RWL reaches 111" (U1 & U2). The fluid state at the SRV inlet will depend upon the water level in the MSL below the SRV. If the water level is low the SRV, when opened, will pass steam. If the water level is intermediate the SRV, when opened, will pass steam with a rapid transition to two-phase flow. If the MSL is full, the valve, when opened, will pass liquid which may be transitioned to two-phase flow and then to steam. The water temperature under the above cases could range from approximately 200°F to 490°F [350°F to 60°F sub-cooling]. A longer total SRV opening time is possible when the MSL and SRVs are full of water. A total maximum valve opening time of 2 to 4 seconds could be anticipated under these conditions. A valve main disc stroke time of approximately 0.500 seconds can be expected.In the January 26, 2000 Unit 1 scram, initial SRV manual actuations produced tailpipe temperatures peaking at 220°F or 380°-420°F. The lower peaks may be a result of greater subcooling of the water passing through the SRVs.
In the presence of a water or two phase mixture, when an SRV is opened:

-Peak downstream tailpipe pressures may not reach the 85 psig required to actuate tailpipe pressure switches for some time. Water/two-phase mixtures create smaller shock forces than saturated steam.
-There may be a significant delay in receiving the amber light. In the most recent scram, a delay of 3.5 minutes was seen in one case.
-Tailpipe temperatures can range from about 220°F to 420°F. The temperature trace indicates temperatures of 400°F can be reached when the SRVDL pressure is maintained near 225 to 250 psia.
-RPV pressure may not change appreciably.
-Since the medium at the SRV is water or two phase flow, discharge leg temperatures for given pressures cannot be predicted using an isenthalpic process on a Mollier diagram.

K/A JUSTIFICATION:

This question satisfies the K/A statement by requiring the applicant to be able to interpret a step in the 34AB-C32-001-2 procedure concerning the Condensate system as it applies to the situation with RWL > +60 inches. The student must decide what actions to take if any are necessary.

The "B" distractor is plausible since the first part is correct. The second part is plausible if the applicant thinks the MSLs are full of water. OE at Hatch proved that the amber light may not come on with water discharging on January 26, 2000. The applicant may also think that RPV pressure is too low to actually create the 85 psig to actuate the amber light.

The "C" distractor is plausible if the applicant thinks that the bottom of the MSLs is at 100 inches since 34AB-C32-001-2 has the operator secure all injection sources except CRD at +100 inches and if the injection sources cannot be secured the operator will have to close the MSIVs if +100 inches is exceeded. The second part is plausible since it is correct.

The "D" distractor is plausible if the applicant thinks that the bottom of the MSLs is at 100 inches since 34AB-C32-001-2 has the operator secure all injection sources except CRD at +100 inches and if the injection sources cannot be secured the operator will have to close the MSIVs if +100 inches is exceeded. The second part is plausible if the applicant thinks the MSLs are full of water. OE at Hatch proved that the amber light may not come on with water discharging on January 26, 2000. The applicant may also think that RPV pressure is too low to actually create the 85 psig to actuate the amber light.

A. **Correct** - See description above.

B. **Incorrect** - See description above.

C. **Incorrect** - See description above.

D. **Incorrect** - See description above.

References:
NONE

K/A:

295008 High Reactor Water Level

G2.1.20 Ability to interpret and execute procedure steps.
(CFR: 41.10 / 43.5 / 45.12) 4.6 4.6

LESSON PLAN/OBJECTIVE:

B21-SLLS-LP-01401, Main Steam and Low Low Set, **Ver 9.1**, EO 014.003.A.02

References used to develop this question:

34AB-C32-001-2, Reactor Water Level Above +60 inches, **Ver 1.1**

43. 295014AA2.04 001/40001C95/400.060.E.01/MOD/P-NORM/BOTH/295014AA2.04/1/2/H/3/ARB/ELJ

Unit 2 is operating at 65% RTP when an inadvertent initiation of HPCI occurs.

The HPCI initiation signal will NOT reset.

HPCI injects at rated flow for approximately 30 seconds before the NPO secures HPCI.

The STA reports the following Thermal Limit values:

MFLCPR	1.013
MFLPD	0.974
MAPRAT	0.936
PCRAT	0.979

With the above conditions,

IAW 34SO-E41-001-2, High Pressure Coolant Injection (HPCI) System, to shutdown HPCI, the NPO DEPRESSED and HELD the Trip Pushbutton and _____ .

A Thermal Limit VIOLATION _____ occur.

A. IMMEDIATELY placed 2E41-F001, HPCI Turb Steam Supply valve, to the CLOSE position;

did

B. IMMEDIATELY placed 2E41-F001, HPCI Turb Steam Supply valve, to the CLOSE position;

did NOT

C. ✔ WAITED until HPCI speed reached ZERO rpm and then placed 2E41-C002-3, Aux Oil Pump, in the PULL-TO-LOCK OFF position;

did

D. WAITED until HPCI speed reached ZERO rpm and then placed 2E41-C002-3, Aux Oil Pump, in the PULL-TO-LOCK OFF position;

did NOT

Description:

IAW 34SO-E41-001-2, High Pressure Coolant Injection (HPCI) System, contains the following steps:

7.3.1.1 - IF the HPCI System must be shutdown with an initiation signal present, THEN use the Preventing HPCI Injection to the RPV subsection of this procedure.

7.3.1.2 - Confirm the HPCI system is no longer required to be in operation for reactor vessel level OR pressure control.

7.3.1.3 - Confirm OR place in START control switch for 2E41-C002-2, Barom Cndsr Vacuum Pump.

7.3.1.4 - Confirm a HPCI Initiation Signal is NOT present, by depressing the HPCI Initiation Signal Reset pushbutton on panel 2H11-P601 AND confirming the white light EXTINGUISHES.

7.3.1.4.1 - IF HPCI Initiation signal "White Light" will NOT reset, THEN shutdown HPCI per the 'Preventing HPCI Injection to the RPV', subsection 7.4.4.

7.3.1.5 - Using 2E41-R612, HPCI Flow Control, reduce turbine speed to about 2000 rpm AND depress AND hold the Turbine Trip pushbutton.

7.3.1.6 - Confirm 2E41-C002-3, Aux Oil Pump, AUTO starts, PRIOR to the turbine speed decreasing below 1500 rpm.

7.3.1.7 - Close 2E41-F001, Turb Steam Supply Valve.

7.3.1.8 - WHEN 2E41-F001, Turb Steam Supply Valve, is fully CLOSED, release the Turbine Trip pushbutton.

7.4.4.1 - IF HPCI is NOT operating, place 2E41-C002-3, HPCI Aux Oil Pump, in PULL-TO-LOCK, panel 2H11-P601.

7.4.4.2 - IF HPCI is operating, perform the following:

7.4.4.2.1 - Depress AND hold the HPCI Turbine Trip pushbutton.

7.4.4.2.2 - WHEN the HPCI turbine has stopped, place 2E41-C002-3, HPCI Aux Oil Pump, in PULL-TO-LOCK.

7.4.4.2.3 - WHEN HPCI TURBINE BRG OIL PRESS LOW alarm is received, release the HPCI Turbine Trip push-button.

Since the Initiation Signal will NOT reset, section 7.4.4 will be performed which places the HPCI Aux Oil pump in the PULL-TO-LOCK position.

The plant process computer is continually monitoring the inputs from the local power range monitors (LPRMs) and other sources to determine the status of the plant's departure from established thermal limits. Computer programs such as the P-1 program and the 3D Monicore program report the status of these limits. The reports show the established limits and actual calculated values. Human Factors Engineering has been employed to enable the operator to determine the safety of the plant with a minimum of effort or analysis. All analyses of the values for the thermal limits **have been programmed to provide a reported value of less than 1.0 for a safe condition**. This allows the operator to quickly scan the report and determine the thermal limit status.

The maximum fraction of limiting power distribution (MFLPD) for each region of the core is calculated. Information provided includes the MFLPD limit, as well as the ten or twelve most limiting core locations for this limit. A listing of **less than 1.0** for all regions of the core ensures that the linear heat generation rate (LHGR) limit has not been exceeded.

The maximum average planar ratio (MAPRAT) for each region of the core is calculated. Information provided includes the MAPRAT limit, as well as the ten or twelve most limiting core locations for this limit. A listing of **less than 1.0** for all regions of the core ensures that the average planar linear heat generation rate (APLHGR) limit has not been exceeded.

The maximum fraction of limiting critical power ratio (MFLCPR) for each region of the core is calculated. Information provided includes the MFLCPR limit as well as the ten or twelve most limiting core locations for this limit. A listing of **less than 1.0** for all regions of the core ensures that the critical power ratio (CPR) limit has not been exceeded.

With the MFLCPR value greater than 1.0, Thermal limits have been violated.

K/A JUSTIFICATION:

This question satisfies the K/A statement by requiring the applicant to review the fuel thermal limits (MFLCPR, MFLPD, MAPRAT & PCRAT) and then determine if any of the thermal limits were violated during the positive reactivity being added by the cold water injection from HPCI.

The "A" distractor is plausible if the applicant remembers the section for the normal shut down of the HPCI system. In the normal shutdown section, the initiation signal will reset therefore the F001 is shut after pressing the Turbine trip pushbutton. The second part is plausible since it is correct.

The "B" distractor is plausible if the applicant remembers the section for the normal shut down of the HPCI system. In the normal shutdown section, the initiation signal will reset therefore the F001 is shut after pressing the Turbine trip pushbutton. The second part is plausible if the applicant remembers that one of the thermal limits is safe when the value is above 1.0 and thinks MFLCPR is the one that is >1.0 and the remaining thermal limits are indicating <1.0.

The "D" distractor is plausible since the first part is correct. The second part is plausible if the applicant remembers that one of the thermal limits is safe when the value is above 1.0 and thinks MFLCPR is the one that is >1.0 and the remaining thermal limits are indicating <1.0.

A. **Incorrect** - See description above.

B. **Incorrect** - See description above.

C. **Correct** - See description above.

D. **Incorrect** - See description above.

References:
NONE

K/A:

295014 Inadvertent Reactivity Addition

AA2. Ability to determine and/or interpret the following as they apply to INADVERTENT REACTIVITY ADDITION : (CFR: 41.10 / 43.5 / 45.13)

AA2.04 †Violation of fuel thermal limits 4.1 4.4*

LESSON PLAN/OBJECTIVE:

C95-PC-LP-40001, Process Computer, **Ver. 3.0**, EO 400.060.E.01

References used to develop this question:

34SO-E41-001-2, High Pressure Coolant Injection (HPCI) System, **Ver. 28.3**
34SV-SUV-020-0, Core Parameter Surveillance, **Ver. 17.18**

Modified from HLT Database Q#206000A4.10-003

Original Question

The **Unit 2** HPCI system is in service with the following parameters:

- o RPV water level ..... +38" (lowest level reached -15")
- o Reactor Pressure .....920 psig
- o Drywell pressure ..... 1.0 psig (highest pressure reached 1.2 psig)

IAW 34SO-E41-001-2, "High Pressure Coolant Injection (HPCI) System", to shutdown HPCI with the above conditions, the Trip Pushbutton is DEPRESSED and _____.

A. 2E41-F001, HPCI Turb Steam Supply valve, is placed to the CLOSE position ONLY after reaching ZERO rpm

B.✓ 2E41-F001, HPCI Turb Steam Supply valve, is placed to the CLOSE position IMMEDIATELY

C. 2E41-C002-3, Aux Oil Pump, is placed to the PULL-TO-LOCK OFF position ONLY after reaching ZERO rpm

D. 2E41-C002-3, Aux Oil Pump, is placed to the PULL-TO-LOCK OFF position IMMEDIATELY

44. 295015AK1.02 001/20328RCA/201.070.A.06/NEW/P-AB/BOTH/295015AK1.02/1/2/H/3/JSC/ELJ

Unit 1 was operating at 100% RTP when an ATWS occurred.

- o Reactor power is 10% RTP
- o SBLC is injecting
- o RWL is being maintained between -110 inches and -140 inches

Subsequently, the following conditions exist:

- o 45 Control Rods are at various positions (cannot be inserted)
- o SBLC Tank level is 12%

Based on the current conditions,

IAW 31EO-EOP-017, CP-3, RWL will be REQUIRED to be maintained between _____ .

If a RPV pressure reduction occurs, Reactor power _____ to the point of Criticality.

A. -110 inches and -140 inches;
will increase

B. -110 inches and -140 inches;
will NOT return

C. +3 inches and +50 inches;
will increase

D. ✓ +3 inches and +50 inches;
will NOT return

Description:

Injection of the Cold Shutdown Boron Weight (CSBW) into the RPV also provides adequate assurance that the reactor is and will remain shutdown. The CSBW is the least weight of soluble boron which, if injected into the RPV and mixed uniformly, will maintain the reactor shutdown under all conditions. This weight is utilized to assure the reactor will remain shutdown irrespective of control rod position or RPV temperature. CSBW has been injected when SBLC tank level reaches 14% or as determined by alternate injection methods. The Hot Shutdown Boron Weight (HSBW) is defined to be the least weight of soluble boron which, if injected into the RPV and uniformly mixed, will maintain the reactor shutdown under hot standby conditions. HSBW has been injected when SBLC tank level reaches 35% or as determined by alternate injection methods.

methods see 31EO-EOP-109-1

WHILE PERFORMING THE FOLLOWING	
IF SBLC tank level drops to 8%	THEN trip the SBLC pumps

K/A JUSTIFICATION:

This question satisfies the K/A statement by requiring the applicant to know the operational implications of cooling down will have on plant if CSBW is not injected into the RPV.

The "A" distractor is plausible if the applicant thinks that 8% is the percentage required for CSBW to be injected. 8% is the lower instrument level tap for SBLC and this is where an override on the RCA flowchart has the crew secure SBLC to prevent damage to the pump. Therefore is the applicant thinks CSBW has not been injected, RWL can not be increased. The second part is plausible since reactivity is being added to the core due to the positive temperature coeffient of reactivity, however the core will remain shutdown under all conditions since CSBW has been injected. The core just will not have as much margin.

The "B" distractor is plausible if the applicant thinks that 8% is the percentage required for CSBW to be injected. 8% is the lower instrument level tap for SBLC and this is where an override on the RCA flowchart has the crew secure SBLC to prevent damage to the pump. Therefore is the applicant thinks CSBW has not been injected, RWL can not be increased. The second part is plausible since it is correct.

The "C" distractor is plausible since the first part is correct. The second part is plausible since reactivity is being added to the core due to the positive temperature coeffient of reactivity, however the core will remain shutdown under all conditions since CSBW has been injected. The core just will not have as much margin.

A. **Incorrect** - See description above.

B. **Incorrect** - See description above.

C. **Incorrect** - See description above.

D. **Correct** - See description above.

References:
NONE

K/A:

295015 Incomplete SCRAM

AK1. Knowledge of the operational implications of the following concepts as they apply to INCOMPLETE SCRAM : (CFR: 41.8 to 41.10)

AK1.02 Cooldown effects on reactor power 3.9 4.1

LESSON PLAN/OBJECTIVE:

EOP-RCA-LP-20328, RPV Control, ATWS (RCA), **Ver 3.0**, EO 201.070.A.06

References used to develop this question:

31EO-EOP-011-1, RCA RPV Control (ATWS), **Ver 10.0**
31EO-EOP-017-1, ATWS Level Control, **Ver 11.0**

45. 295016G2.4.11 001/05201C82/010.018.A.02/BANK/P-AB/BOTH/295016G2.4.11/1/1/F/3/ARB/ELJ

An evacuation of the Main Control Room has occurred.

- o The **Unit 1** Reactor was NOT scrammed prior to leaving the Control Room
- o SPDS is NOT available

IAW 31RS-OPS-001-1, Shutdown From Outside Control Room,

Guidance is given to LOCALLY scram the reactor by tripping the Scram Discharge Volume (SDV) _____ .

This procedure provides guidance to confirm the Reactor is shutdown by visually verifying that each _____ .

A. Thermal Level Switches;
SDV Vent and Drain valve is CLOSED

B. Thermal Level Switches;
HCU Scram Inlet and Outlet valve is OPEN

C. Float Level Switches;
SDV Vent and Drain valve is CLOSED

D✓ Float Level Switches;
HCU Scram Inlet and Outlet valve is OPEN

Description:

There are no switches on the RSDP which will shutdown the reactor. There are two methods to locally scram the reactor covered in the remote shutdown procedures. The Reactor Protection System (RPS) can be momentarily de-energized. This is done by opening breakers CB3A and CB3B in the RPS distribution panel, C71-P001. These breakers de-energize the Average Power Range Monitors (APRMs) resulting in an APRM Inop scram signal. This panel is located on the 130' elevation of the Control Building (RPS MG set room). The automatic scram signal which occurs when the breakers are opened should result in the control rods fully inserting, thus shutting the reactor down. After both breakers have been opened reclose the breakers.
The Hi-Hi scram discharge volume level switch can be manually tripped to input a SCRAM. There are four level switches that are used to detect the level in the scram discharge volume where an auto scram is initiated (C11-NO13-A-D). These switches are on the Scram Discharge Volume piping located the 130' elevation of the Reactor Building, two of them on the northwest side, the other two on the southwest side. The switches are tripped to indicate a high level in the scram discharge volume. The switches are tripped by unscrewing the screw on top of the cover, removing the cover housing to expose the switch, and tripping the magnetrol switches. When two switches on either the north side or south side are actuated (tripped) a scram occurs causing control rods to be inserted.

31RS-OPS-001-1 calls (step 4.4.2) for tripping of the level switches 1C11-N013A-D which are the float level switches (the thermals are 1C11-N060A-D). The procedure also has the operator check (step 4.6) the scram inlet/outlet valves are open (the SDV vent and drains are expected to

close but are not used as indication of rod insertion).

K/A JUSTIFICATION:

This question satisfies the K/A statement by requiring the applicant to know 31RS-OPS-001-1 steps for inputting a RPS scram signal (step 4.4.2) and where to monitor (step 4.6) for a successful scram.

The "A" distractor is plausible since either the float switches or thermal switches will cause a scram due to SDV volume however the float switches are the only ones manipulated to cause a manual SDV scram per 31RS-OPS-001-1. The second part is plausible because when a scram is input these valves will travel closed to bottle up the SDV but are not an indication that the individual control rod scram valves have opened.

The "B" distractor is plausiblesince either the float switches or thermal switches will cause a scram due to SDV volume however the float switches are the only ones manipulated to cause a manual SDV scram per 31RS-OPS-001-1. The second part is plausible since it is correct.

The "C" distractor is plausible since the first part is correct. The second part is plausible because when a scram is input these valves will travel closed to bottle up the SDV but are not an indication that the individual control rod scram valves have opened.

A. **Incorrect** - See description above.

B. **Incorrect** - See description above.

C. **Incorrect** - See description above.

D. **Correct** - See description above.

References:
NONE

K/A:

295016 Control Room Abandonment

G2.4.11 Knowledge of abnormal condition procedures.
(CFR: 41.10 / 43.5 / 45.13) 4.0 4.2

LESSON PLAN/OBJECTIVE:

C82-RSDP-LP-05201, Remote Shutdown Panel (RSDP), **Ver. 4.0**, EO 010.018.A.02

References used to develop this question:

31RS-OPS-001-1, Shutdown From Outside Control Room, **Ver. 5.24**
34AB-C71-001-1, Scram Procedure, **Ver. 12.7**
57SV-C11-001-1, Scram Discharge Level FT&C, **Ver. 6.0**

Bank question used on HLT 2009-301 NRC Exam

46. 295018AA2.02 001/03301P41/033.015.A.01/MOD/SYS-B/BOTH/295018AA2.02/1/1/H/3/JSC/ELJ

Unit 2 is starting up at 2% RTP, with the CRD and RWCU Systems maintaining RWL.

- o RWCU dump flow is 50 gpm

Subsequently:

- o RWCU dump flow is raised to 75 gpm
- o 2P41-F316A and 2P41-F316D, Turbine Bldg. PSW Isolation valves, close
- o CONDENSER ROOM FLOODING, 650-164, alarm is ILLUMINATED

RBCCW suction temperature is 102°F and increasing and the Reactor is manually scrammed.

Based on the above conditions,

The RBCCW system response is due to _____ .

2P41-F316A and 2P41-F316D _____ be overridden and re-opened from the MCR.

A. a loss of cooling medium to the RBCCW Hx;
can

B.✔ a loss of cooling medium to the RBCCW Hx;
can NOT

C. an excessive RWCU dump flow ONLY;
can

D. an excessive RWCU dump flow ONLY;
can NOT

Description:

Turbine Building Isolation Valves 2P41-F316A-D (1P41-F310A-D)
The Turbine Building Isolation Valves (two valves in series in each division header) isolate on any of the following:

a. A signal from either Core Spray System LOCA logic Div 1 or Div 2. (-101" RWL or 1.85 psig D/W pressure)
b. LOSP - The valves will close after power is restored to the valves. During the power loss, the valves remain in the open position because they are MOVs and have no power to reposition.
c. Condenser Room Flooding - Level switches are located in the Cond Bay floor with a small dam around each switch. Switches will pick up if water level rises to 3" above the floor level.
d. There is a keylock override switch (one per division) in the Control Room (P652 panel) to override the closure of the TB isolation valves due to a LOCA or LOSP signal.

With 2P41-F316A-D valves closing, all cooling water is isolated from the RBCCW Hx. Increasing RWCU Dump flow will cause RBCCW temp to increase, just not to the extent that isolating all flow to the RBCCW Hx.

K/A JUSTIFICATION:

This question satisfies the K/A statement by requiring the applicant to know the effect of the loss of PSW and RWCU dump flow has on the RBCCW system cooling water temperature.

The "A" distractor is plausible since the first part is correct. The second part is plausible since the TB isolation valves can be overriden for a LOCA or LOSP however condenser bay flooding cannot be overriden.

The "C" distractor is plausible since the increased dump flow will cause NRHX temperature to increase therefore increasing RBCCW cooling water temperature however this effect is minimal as compared to the loss of PSW to the RBCCW heat exchanger. The second part is plausible since the TB isolation valves can be overriden for a LOCA or LOSP however condenser bay flooding cannot be overriden.

The "D" distractor is plausible since the increased dump flow will cause NRHX temperature to increase therefore increasing RBCCW cooling water temperature however this effect is minimal as compared to the loss of PSW to the RBCCW heat exchanger. The second part is plausible since it is correct.

A. **Incorrect** - See description above.

B. **Correct** - See description above.

C. **Incorrect** - See description above.

D. **Incorrect** - See description above.

References:

NONE

K/A:

295018 Partial or Complete Loss of Component Cooling Water

AA2. Ability to determine and/or interpret the following as they apply to PARTIAL OR COMPLETE LOSS OF COMPONENT COOLING WATER :
(CFR: 41.10 / 43.5 / 45.13)

AA2.02 Cooling water temperature 3.1 3.2

LESSON PLAN/OBJECTIVE:

P41-PSW-LP-03301, Plant Service Water, **Ver 10.3**, EO 033.015.A.01

References used to develop this question:

34AB-P42-001-2, Loss of Reactor Building Closed Cooling Water, **Ver 2.6**
34AB-P41-001-2, Loss of Plant Service Water, **Ver 12.0**

Modified from HLT-6 (2011-301) NRC Exam Q#87

Original Question

Unit 2 is starting up at 2% RTP, with the CRD and RWCU Systems maintaining RWL.

- o RWCU dump flow is 50 gpm.

Subsequently:

- o RWCU dump flow is raised to 75 gpm
- o 2P41-F316A and 2P41-F316D, Turbine Bldg. PSW Isolation valves, inadvertently close.

RBCCW suction temperature is 102°F and increasing and the reactor is manually scrammed.

Which ONE of the following identifies the cause of the RBCCW System response AND the reporting requirements IAW REG-0025, One, Four, and Eight Hour Reporting Requirements of 10 CFR 50.72?

A.✓ Loss of cooling medium to the RBCCW Hx;
4 Hour report is required

B. Loss of cooling medium to the RBCCW Hx;
1 Hour report is required

C. Excessive RWCU dump flow ONLY;

4 Hour report is required

D. Excessive RWCU dump flow ONLY;
1 Hour report is required

47. 295019AA1.02 001/03501P51/P70/200.025.A.03/MOD/SYS-I/BOTH/295019AA1.02/1/1/H/2/ARB/ELJ

Unit 2 is operating at 100% RTP when a complete (100%) rupture on the Non-Essential Instrument Air Header, down stream of 2P52-F015, occurs.

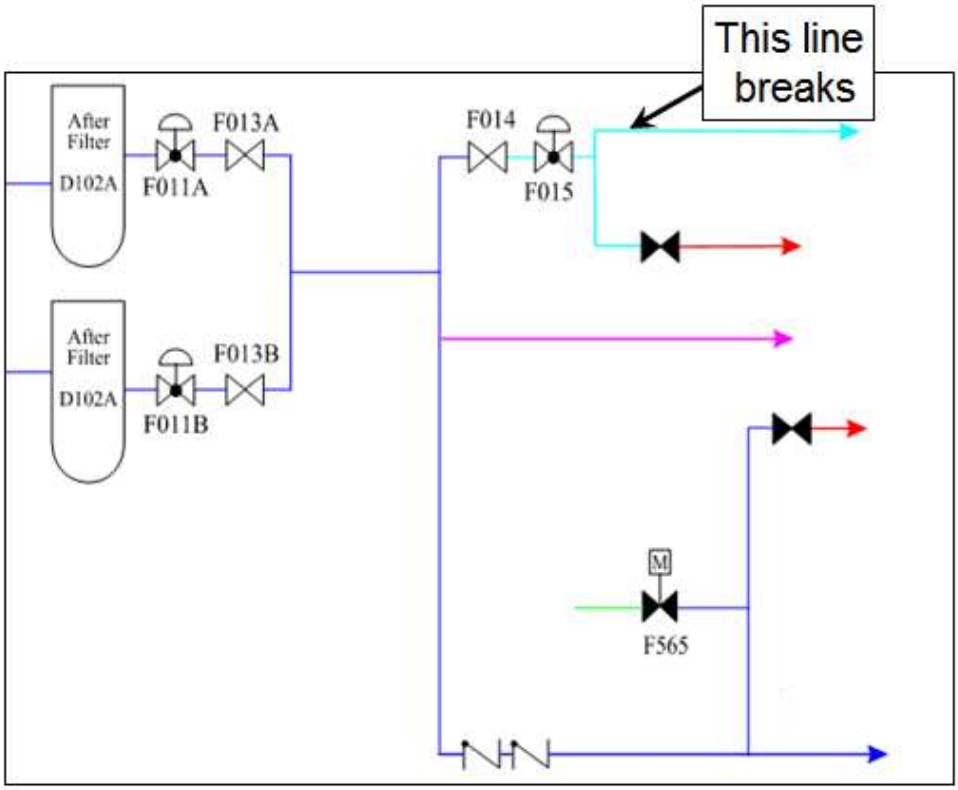

With NO operator action, the 2P52-F015, Turb. Bldg Inst Air To RW Bldg Isol valve, will _____ .

The setpoint for 2P52-F565, Rx Bldg Inst N_2 To Non-Int Air El. 185 Isol Vlv, to automatically open is _____ .

A. close and remain closed;
70 psig

B. close and remain closed;
80 psig

C. continously cycle open and closed;
70 psig

D. ✓ continously cycle open and closed;
80 psig

Description:

Automatic Initiations and Isolations:

The standby Service Air Compressor (A or B) starts at 100 psig and “C” starts at 107 psig.
The Nitrogen Backup Valve, F565, opens automatically at 80 psig decreasing to supply Nitrogen pressure to the Non-Interruptible Essential Air Header.
The Air Compressor Discharge Valves F010A/B/C (F200A/B/C) close if compressor discharge pressure decreases to 80 psig.
At 70 psig, the Service Air Isolation valve F017 closes, isolating the Service Air System.
At 50 psig, Non-Essential Instrument Air Header Isolation Valve closes, isolating the Non-Essential Instrument Air Header.

In this question, where the break is, the F015 would cycle close then open as pressure cycles up and down due to isolation of the leak and due to the location of the pressure sensing line (upstream of valve).

K/A JUSTIFICATION:

This question satisfies the K/A statement by requiring the applicant to determine (monitor) the status of Instrument air system valve (F015) with a loss of instrument air.

The "A" distractor is plausible if the applicant thinks that the sensing line for F015 is downstream of the valve. If downstream, the valve would close and remain closed. The second part is plausible if the applicant thinks about the pressure setpoint (70 psig) for the F017 and thinks this is the setpoint for the F565.

The "B" distractor is plausible if the applicant thinks that the sensing line for F015 is downstream of the valve. If downstream, the valve would close and remain closed. The second part is plausible since it is correct.

The "C" distractor is plausible since the first part is correct. The second part is plausible if the applicant thinks about the pressure setpoint (70 psig) for the F017 and thinks this is the setpoint for the F565.

A. **Incorrect** - See description above.

B. **Incorrect** - See description above.

C. **Incorrect** - See description above.

D. **Correct** - See description above.

References:
NONE

K/A:

295019 Partial or Complete Loss of Instrument Air

AA1. Ability to operate and/or monitor the following as they apply to PARTIAL OR COMPLETE LOSS OF INSTRUMENT AIR : (CFR: 41.7 / 45.6)

AA1.02 Instrument air system valves: Plant-Specific 3.3 3.1

LESSON PLAN/OBJECTIVE:

P51-P52-P70-PLANT AIR-LP-03501, Plant Air Systems, **Ver. 3.0**, EO 200.025.a.03

References used to develop this question:

34SO-P51-002-2, Instrument And Service Air Systems, **Ver. 21.5**

Modified from question in HLT Database Q# LT-200025-066

ORIGINAL QUESTION

Unit 2 is at 100% rated power when a complete (100%) rupture on the Non-Essential Instrument Air Header, down stream of 2P52-F015, occurs.

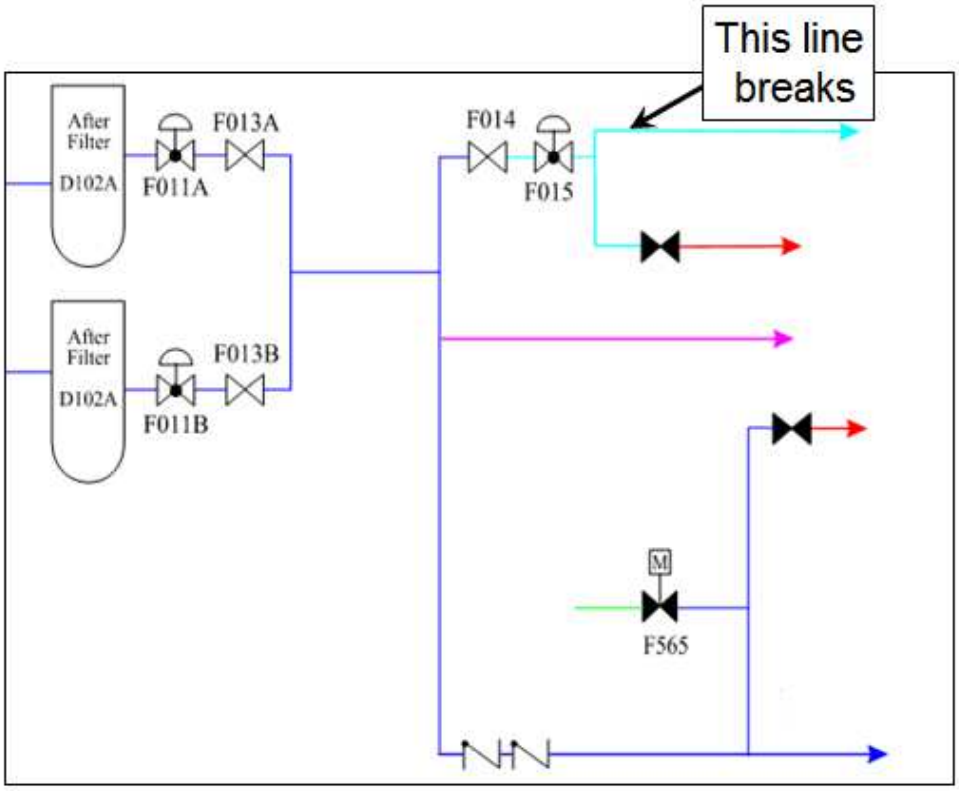

With NO operator action, which ONE of the choices below describes how the plant will respond to this pipe break?

The Turb. Bldg Inst Air To RW Bldg Isol valve, 2P52-F015, will _____; and,

The Service Air Header Isolation valve, 2P51-F017, will _____.

A.✓continously cycle open and closed;
close and remain closed;

B. close and remain closed;
close and remain closed;

C. continously cycle open and closed;
continously cycle open and closed

D. close and remain closed;
continously cycle open and closed

48. 295020AA1.02 001/01301T23/013.009.A.01/BANK/P-NORM/BOTH/295020AA1.02/1/2/H/3/JSC/ELJ

Unit 2 is operating at 100% RTP.

o Nitrogen (N_2) is being added to the Unit 2 Drywell (DW) from the Unit 1 N2 Storage Tank

34SO-T48-002-2, "Containment Atmosphere Control and Dilution System" section 7.3.1, "Alternate Primary Containment Nitrogen Makeup From CAD loop A, Unit 1 or Unit 2 N_2 Storage Tank" is being used to add the N2.

o 2T48-F113, "Nitrogen to DW isolation valve" is OPEN
o 2T48-F114, "Nitrogen to DW isolation valve" is OPEN
o DW venting using Standby Gas Treatment is in progress

o An inadvertant loss of the"2A" Reactor Protection System (RPS) bus occurred
o It will take 8 hours to restore the "2A" RPS bus

If the operator stationed at the 2H11-P657 panel does NOT take any action, which ONE of the following describes the operational implications for the DW?

A. ✔ N_2 addition to the DW will continue and a loss of DW cooling will eventually occur due to high DW pressure

B. N_2 addition to the DW will continue and DW cooling will remain in operation indefinitely

C. N_2 addition to the DW will automatically isolate and DW cooling will remain in operation indefinitely

D. N_2 addition to the DW will automatically isolate and a simultaneous loss of DW cooling will occur

Description:

The procedure (34SO-T48-002-2) explains that 2T48-F113, 2T48-F114 will not close on a Group 2 isolation and that an operator must be stationed to close the valves in the event that an isolation signal/condition actually occurs.

As a result of the loss of RPS, a Group 2 signal will be generated; however, nitrogen will continue to be added to the Drywell. The Group 2 signal will isolate the DW vent line up. As a result, Drywell pressure will increase and eventually result in a High Drywell pressure LOCA signal (assuming no operator actions are taken, which the question stem states).

Typically nitrogen addition to the Drywell automatically isolates on a Group 2 isolation signal; however, when performing Alternate Nitrogen makeup (as in this question), it does not automatically isolate.

K/A JUSTIFICATION:

This question satisfies the K/A statement by requiring the applicant to know how a Group 2 signal will affect the Drywell atmosphere when making up Nitrogen to the Drywell via alternate methods.

The "B" distractor is plausible since Drywell cooling will be lost eventually when a High Drywell pressure LOCA signal occurs. The second part is plausible if the candidate assumes that Drywell venting remains in service.

The "C" distractor is plausible since Nitrogen addition will not auto isolate and Drywell cooling will eventually be lost when a Drywell pressure LOCA signal occurs. **Plausible** if the candidate assumes nitrogen addition auto isolates due to the Gr 2 signal generated by the loss of RPS.

The "D" distractor is plausible since nitrogen addition does not auto isolate. 2nd part is not correct, Drywell cooling is not lost until the Drywell pressure signal is received (in this case). **Plausible** if the candidate assumes that Drywell cooling is lost as a result of a Group 2 signal which is generated due to the RPS loss. Drywell cooling loss would actually occur if a Group 2 signal due to Drywell pressure (1.85 psig) occurs

A. **Correct** - See description above.

B. **Incorrect** - See description above.

C. **Incorrect** - See description above.

D. **Incorrect** - See description above.

References:
NONE

K/A:

295020 Inadvertent Containment Isolation

AA1. Ability to operate and/or monitor the following as they apply to INADVERTENT CONTAINMENT ISOLATION : (CFR: 41.7 / 45.6)

AA1.02 Drywell ventilation/cooling system 3.2 3.2

LESSON PLAN/OBJECTIVE:

T23-PC-LP-01301, Primary Containment, **Ver 7.1**, EO 013.009.A.01

References used to develop this question:

34SO-T48-002-2, Containment Atmospheric Control and Dilution Systems, **Ver 25.2**
34AB-C71-002-2, Loss of RPS, **Ver 5.4**

Bank question from 2009 HLT 4 NRC exam question 48 (HLT questions NRC2009301 048)

49. 295021AK3.01 001/00701E11/007.007.A.02/BANK/P-AB/BOTH/295021AK3.01/1/1/F/3/ARB/ELJ

With the plant shutdown in Mode 4 and RHR loop "B" operating in Shutdown Cooling, the following conditions exist:

- RPV pressure is 0 psig
- Recirc suction temperature is 170°F
- Reactor water level indicates 58 inches on 2C32-R606A-C, GEMACs
- RHR Loop "B" flow is 7700 gpm

RHR Loop "B" develops a leak and a SDC isolation results. Following the isolation the following parameters exist:

- RPV pressure is 0 psig
- Recirc suction temperature is 170°F
- RWL indicates 1 inch on 2C32-R606A-C

IAW 34AB-E11-001-2, Loss of Shutdown Cooling,

RWL will be raised to a MINIMUM of 53 inches as indicated on _____ .

The reason RWL is raised is to _____ .

A. 2B21-R605, Floodup Range;
increase coolant inventory ONLY

B.✔ 2B21-R605, Floodup Range;
increase coolant inventory AND ensure a flow path for natural circulation

C. 2C32-R606A, Narrow Range;
increase coolant inventory ONLY

D. 2C32-R606A, Narrow Range;
increase coolant inventory AND ensure a flow path for natural circulation

Description:

RWL must be greater than +53 inches if RHR flow is less than 7700 gpm (>53 inches allows for natural circulation). If RHR flow is greater than 7700 gpm, RWL must be maintained above +33 inches. When shutdown cooling is placed in service, RHR flow is adjusted to 6200-8200 gpm (7700-8200 gpm). This ensures adequate cooling and flow through the core (prevents stratification).

IAW 34AB-E11-001-2, Loss of Shutdown Cooling, step 4.6 states "IF a minimum RHR water flow of 7700 gpm through the reactor vessel CANNOT be maintained, **increase** reactor vessel water level **greater than 53 inches corrected** AND as high as possible within the indicated range to ensure a flow path for **natural circulation** AND to increase **coolant inventory**."

Also the prior NOTE states: "During cold conditions (≤212°F), 2C32-R606A, 2C32-R606B, AND 2C32-R606C, Reactor Level Instruments, read approximately **15 inches highe**r than actual reactor water level. To utilize 2B21-R605 for water level determination, refer to 34SV-SUV-019-2."

K/A JUSTIFICATION:

This question satisfies the K/A statement by requiring the applicant to know that with a loss of SDC, RWL is raised to >+53 inches to increase coolant inventory and to promote natural circulation flow in the core.

The "A" distractor is plausible since the first part is correct. The second part is plausible if the applicant understands that by increasing RWL to >53 inches, coolant inventory will thus be increased, thinking this is the reason to raise RWL and does not consider a flow path for natural circulation.

The "C" distractor is plausible if the applicant does not remember the Narrow Range RWL instruments have a (-) 15" correction factor while in Mode 4 and thinks the normal (0-60") RWL instruments are still valid. The second part is plausible if the applicant understands that by increasing RWL to >53 inches, coolant inventory will thus be increased, thinking this is the reason to raise RWL and does not consider a flow path for natural circulation.

The "D" distractor is plausible if the applicant does not remember the Narrow Range RWL instruments have a (-) 15" correction factor while in Mode 4 and thinks the normal (0-60") RWL instruments are still valid. The second part is plausible since it is correct.

A. **Incorrect** - See description above.

B. **Correct** - See description above.

C. **Incorrect** - See description above.

D. **Incorrect** - See description above.

References:
NONE

K/A:

295021 Loss of Shutdown Cooling

AK3. Knowledge of the reasons for the following responses as they apply to LOSS OF SHUTDOWN COOLING : (CFR: 41.5 / 45.6)

AK3.01 Raising reactor water level 3.3 3.4

LESSON PLAN/OBJECTIVE:

E11-RHR-LP-00701, Residual Heat Removal System, **Ver. 9.1**, EO 007.007.A.02

References used to develop this question:

34AB-E11-001-2, Loss Of Shutdown Cooling, **Ver. 6.13**

50. 295023AK1.03 001/05401RMCS/001.010.A.12/MOD/P-NORM/BOTH/295023AK1.03/1/1/F/3/JSC/ELJ

Unit 1 has just entered Mode 5.

- ALL Control Rods FULLY inserted
- RPS Shorting Links INSTALLED

Subsequently, while performing HCU tagouts, it is discovered that four (4) Control Rods in one quadrant have re-positioned to the FULL OUT position.

SRM A indicates the following:

- 300 cps and rising
- Slight positive period

The remaining SRMs continue to indicate 30 cps.

Based on these indications and with NO operator actions:

Annunicator, ROD DRIFT, 603-247, will FIRST be ILLUMINATED as soon as a Control Rod moves _____ .

If SRM A continues to increase, SRM A _____ automatically initiate a FULL Scram to stop the Reactor Power increase.

A. away from position 00;
will

B. ✔ away from position 00;
will NOT

C. past position 02;
will

D. past position 02;
will NOT

Description:

When a control rod is at any other reed switch other than an even reed switch position, a rod drift alarm occurs unless the rod drift is bypassed for that control rod. Drift alarm senses power to the insert, withdraw and settle buses. The alarm is bypassed when any of the three are energized for that rod. A rod drifting while other normal rod movement is being conducted will still initiate a "ROD DRIFT" alarm.

The UPSCALE TRIP (High High scram) is used only during refueling operations (setpoint 3 x 10^5 cps). With the shorting links removed, a single trip signal from any nuclear instrument channel (8 IRMs or 4 SRMs) or a single 2/4 voter module will cause a Full Reactor scram. For a single 2/4 logic module to trip, it must see a trip from at least 2 OPERABLE & UNBYPASSED APRMs. The shorting links are required to be removed by the Technical Requirements Manual

in Mode 5 with any Control Rod withdrawn from a core cell containing one or more fuel assemblies and SDM not demonstrated per 42CC-ERP-010-0, Shutdown Margin Demonstration, for current core configuration.

K/A JUSTIFICATION:

This question satisfies the K/A statement by requiring the applicant to know the indications of a critical quadrant and the know the operational implications as associated with increasing reactor power with the shorting links installed based on the input from the SRMs.

The "A" distractor is plausible since the first part is correct. The second part is plausible if the applicant thinks about the operational implications associated with the Shorting links removed. A full reactor scram will occur if any SRM/IRM/Voter Module were to have a scram signal (1 of 16 logic). With the shorting links installed, the SRMs can not cause a scram and IRM/PRMs operate normally.

The "C" distractor is plausible if the applicant thinks that Rod Drift alarm is only actuated when an odd number reed switch is made up with the insert, withdraw or the settle bus not energized. The applicant may think that position 02 is correct since the RWM uses position 02 in determining if the reactor is shutdown based on rod positions. The second part is plausible if the applicant thinks about the operational implications associated with the Shorting links removed. A full reactor scram will occur if any SRM/IRM/Voter Module were to have a scram signal (1 of 16 logic). With the shorting links installed, the SRMs can not cause a scram and IRM/PRMs operate normally.

The "D" distractor is plausible if the applicant thinks that Rod Drift alarm is only actuated when an odd number reed switch is made up with the insert, withdraw or the settle bus not energized. The applicant may think that position 02 is correct since the RWM uses position 02 in determining if the reactor is shutdown based on rod positions. The second part is plausible since it is correct.

A. **Incorrect** - See description above.

B. **Correct** - See description above.

C. **Incorrect** - See description above.

D. **Incorrect** - See description above.

References:
NONE

K/A:

295023 Refueling Accidents

AK1. Knowledge of the operational implications of the following concepts as they apply to REFUELING ACCIDENTS : (CFR: 41.8 to 41.10)

AK1.03 Inadvertent criticality 3.7 4.0

LESSON PLAN/OBJECTIVE:

C11-RMCS-LP-05401, Reactor Manual Control System, **Ver 6.0**, EO 001.010.A.12

References used to develop this question:

34AR-603-247-1, ROD DRIFT, **Ver 5.2**

Modified from HLT Database which was used on HLT-5 NRC Exam Q#15

Original Question

Unit 2 is in a refueling outage.

Plant conditions:

- o Reactor Protection System (RPS) Shorting Links have been REMOVED
- o Due to a detector malfunction, the SRM "A" count rate begins to rise

Which ONE of the choices below completes the following statement?

When SRM "A" count rate increases to 4 x 10^5 cps , THEN a _____ will exist.

A. control rod block (ONLY)

B. control rod block AND a trip in RPS Channel "A" (ONLY)

C.✓ control rod block AND a trip in BOTH RPS Channels

D. "SRM Upscale OR Inoperative" (603-204) alarm (ONLY)

51. 295024EA2.08 001/01301T23/013.046.A.05/MOD/SYS-B/BOTH/295024EA2.08/1/1/H/2/ARB/ELJ

Unit 2 was operating at 55% RTP, due to a fuel leaker, when a steam line break inside containment occurs.

Plant conditions are below:

- o Drywell pressure is 10.5 psig and slowly increasing
- o Drywell radiation is 95.0 R/hr and steady
- o Torus pressure is 10.0 psig and slowly increasing
- o Neither Drywell or Torus sprays have been initiated

With the above conditions,

At this time, _____ Sprays are REQUIRED to be placed in service.

The AMBER light above 2T48-F318, Torus Vent Valve, will be _____ .

A. BOTH Drywell and Torus;
extinguished

B. BOTH Drywell and Torus;
illuminated

C. ✓ ONLY Torus;
extinguished

D. ONLY Torus;
illuminated

Description:

The determination that Torus pressure cannot be maintained below 11 psig (Unit1 10 psig), which is the Suppression Chamber Spray Initiation Pressure (SCSIP), can be made before reaching the actual limit based on trend or future prediction based on other plant conditions. Torus sprays are initiated before exceeding the Suppression Chamber Spray Initiation Pressure of 11 psig (Unit 1 10 psig). Although operation of Torus sprays may not, by itself, preclude chugging, torus sprays are initiated before reaching the Suppression Chamber Spray Initiation Pressure to assure that operation of this system is attempted for reducing primary containment pressure before operation of Drywell Sprays is directed. Also, it is unknown if the high pressure was caused by noncondensables being forced into the torus or if there exists some bypass path which has created the elevated pressure.

With Unit 2 Torus pressure 10 psig only Torus sprays will be initiated.

At 138 R/hr in the drywell, all the primary containment 18" purge and vent valves close. The valves are; Drywell purge, T48-F307 and F308; Torus purge, T48-F309 and F324; Drywell vent,

T48-F319 and F320; and Torus vent T48-F318 and F326. If the valves are closed on a High Radiation signal, then an **amber** light above the valve indicator on H11-P602 will illuminate to tell the operator that the valves closed, or would have closed, on high radiation in the drywell.

NOTE: These valves are part of PCIS Group 2.

Group 2 Isolation;

a. Either of the following conditions will cause a Group 2 isolation:
   1) Reactor Water Level Low (Level 3) (+3.0")
   2) Drywell Pressure High (1.85 psig)

IAW NMP-EP-110-GL02, HNP-EALs-ICs, Threshold Values and Basis, 84 R/Hr is a loss of the RCS Barrier on the DW radiation monitors.

KA JUSTIFICATION:

This question satisfies the K/A statement by requiring the applicant to interpret high Drywell/Torus pressures along with Drywell radiation levels and determine if a PCIS isolation signal will be indicated by the high Drywell radiation level (Amber light above 2T48-F318).

The "A" distractor is plausible if the applicant remembers the Unit 1 value of 10.0 psig in the Torus and thinks both the Drywell & Torus are required to have sprays initiated and would be correct if asking on Unit 1. The second part is plausible since it is correct.

The "B" distractor is plausible if the applicant remembers the Unit 1 value of 10.0 psig in the Torus and thinks both the Drywell & Torus are required to have sprays initiated and would be correct if asking on Unit 1. The second part is plausible if the applicant remembers 84 R/hr (radiation value for RCS Barrier) and thinks that this is the value associated with that the amber light and thinks it will be illuminated (recent change from 138 R/hr).

The "D" distractor is plausible since the first part is correct. The second part is plausible if the applicant remembers 84 R/hr (radiation value for RCS Barrier) and thinks that this is the value associated with that the amber light and thinks it will be illuminated (recent change from 138 R/hr).

A. **Incorrect** - See description above.

B. **Incorrect** - See description above.

C. **Correct** - See description above.

D. **Incorrect** - See description above.

References:
NONE

K/A:

295024 High Drywell Pressure

EA2. Ability to determine and/or interpret the following as they apply to HIGH DRYWELL PRESSURE: (CFR: 41.10 / 43.5 / 45.13)

EA2.08 Drywell radiation levels 3.6 4.0

LESSON PLAN/OBJECTIVE:

T23-PC-LP-01301, Primary Containment, **Ver. 7.1**, EO 200.004.A.03
EOP-PC-LP-20310, Primary Containment Control (PC), **Ver. 3.0**, EO 201.076.A.16

References used to develop this question:

31EO-EOP-012-2, PC Primary Containment Control, **Ver. 6.0**
34AR-602-436-2, Containment Radiation High/Inop, **Ver. 2.4**
NMP-EP-110-GL02, HNP EALs - ICs, Threshold Values and Basis, **Ver 3.0**

Modified from HLT Database Q#295024EA2.06-001, which also was used on
2012-301 HLT-7 NRC Exam Q#50

Original Question

A steam line break inside containment has occurred on **Unit 2**.

o Drywell pressure is 10.5 psig and slowly increasing
o Torus pressure is 10 psig and slowly increasing
o Neither Drywell or Torus sprays have been initiated

Which ONE of the following describes the effect of the steam line break on Torus water temperature and requires Primary Containment sprays with these conditions?

The Torus water temperature will heat up _____ .
With the above conditions and at this time, _____ Sprays are REQUIRED to be placed in service.

A. uniformly throughout the Torus due to the design of the downcomers;

BOTH Drywell and Torus

B.✓ uniformly throughout the Torus due to the design of the downcomers;

ONLY Torus

C. directly under the area of the DW leak due to the energy being distributed directly to the Torus water in that area;

BOTH Drywell and Torus

D. directly under the area of the DW leak due to the energy being distributed directly to the Torus water in that area;

ONLY Torus

52. 295025EK2.01 001/01001C71/300.008.A.02/MOD/P-AB/BOTH/295025EK2.01/1/1/H/3/JSC/ELJ

Unit 2 is operating at 73% RTP when the following MSIVs close:

- o 2B21-F022A, Inboard Main Steam Isolation Valve
- o 2B21-F028B, Outboard Main Steam Isolation Valve

- o RPV pressure peaks at 1078 psig

Based on the above conditions,

Closure of the above combination of MSIVs, _____ result in a RPS half (1/2) Scram signal from MSIV position input to the RPS logic.

The High Reactor Pressure RPS Scram setpoint _____ been exceeded.

A. will;
has

B. will;
has NOT

C. will NOT;
has

D. will NOT;
has NOT

Description:

Bases: High pressure in the Reactor could cause a rupture to the nuclear system process barrier, resulting in the release of fission products. The Reactor high-pressure scram works in conjunction with the pressure relief system in preventing RPV pressure from exceeding the maximum allowable pressure. The Reactor high-pressure scram also protects the core from exceeding thermal-hydraulic limits during certain pressure transients, which occur when the Reactor is operating at less than rated power and flow. The scram setpoint is chosen far enough above the normal operating pressure to avoid spurious scrams, yet set low enough to provide a wide margin to the maximum allowable pressure. The scram signal is set to 1074 psig.

1) The MSIV scram logic is as follows:
a) Closure of any MSIV: NO ACTION
b) Closure of either MSIV in MSLs A & D (B & C): NO ACTION
c) Closure of either MSIV in MSLs A & B (or C & D):HALF SCRAM CHANNEL "A"
d) Closure of either MSIV in MSLs A & C (or B & D):HALF SCRAM CHANNEL "B"
e) Closure of any MSIV in three MSLs: FULL SCRAM

K/A JUSTIFICATION:

This question satisfies the K/A statement by requiring the applicant to diagnose a reactor scram

and determine its cause. The applicant has to know how the MSIV logic works and how the closure of the MSIVs affects RPV pressure which causes the transient.

The "B" distractor is plausible since the first part is correct. The second part is plausible if the applicant thinks the RPS scram logic signal for RPV pressure is 1080 psig which the the TS setpoint for the RPV pressure. TS requires the setpoint to be ≤ 1080 psig. The setpoint is 1074 psig which is a conservative pressure to TS.

The "C" distractor is plausible since not all combinations of MSIV closures will result in the RPS actuation (half scram). Combinations that will cause a half scram are A/B, D/C, B/D, and A/C. Combinations that will not cause a half scram are B/C and A/D. The second part is plausible since it is correct.

The "D" distractor is plausible since not all combinations of MSIV closures will result in the RPS actuation (half scram). Combinations that will cause a half scram are A/B, D/C, B/D, and A/C. Combinations that will not cause a half scram are B/C and A/D. The second part is plausible if the applicant thinks the RPS scram logic signal for RPV pressure is 1080 psig which the the TS setpoint for the RPV pressure. TS requires the setpoint to be ≤ 1080 psig. The setpoint is 1074 psig which is a conservative pressure to TS.

A. **Correct** - See description above.

B. **Incorrect** - See description above.

C. **Incorrect** - See description above.

D. **Incorrect** - See description above.

References:
NONE

K/A:

295025 High Reactor Pressure

EK2. Knowledge of the interrelations between HIGH REACTOR PRESSURE and the following: (CFR: 41.7 / 45.8)

EK2.01 RPS 4.1* 4.1

LESSON PLAN/OBJECTIVE:

C71-RPS-LP-01001, Reactor Protection System, **Ver 8.2**, EO 300.008.A.02

References used to develop this question:

34AR-603-104-2, MSIVs Not Fully Open Trip, **Ver 3.0**

Modified from HLT Database Q#LT-300008-006

Original Question

Unit 2 is at 60% power when Inboard MSIV 2B21-F022B and Outboard MSIV 2B21-F028A inadvertently fail closed.

Which ONE of the choices below completes the following statement?

INITIALLY, reactor power will _____; and, a RPS half scram signal _____ be generated.

A.✓ increase;
will

B. increase;
will NOT

C. remain the same;
will

D. remain the same;
will NOT

53. 295026EK1.02 001/20310PC/201.074.A.09/MOD/P-EOP/BOTH/295026EK1.02/1/1/F/3/ARB/ELJ

A leak inside the Drywell (DW) has occurred on **Unit 2** resulting in the following conditions:

- o DW pressure is 1.2 psig and slowly increasing
- o DW temperature is 135°F and slowly increasing

- o Torus pressure is 0.8 psig and slowly increasing
- o Torus temperature is 101°F and slowly increasing

With the above conditions,

Steam condensation from the event will cause Torus water temperature to heat up _____ .

IAW 31EO-EOP-012-2, PC Primary Containment Control, the LOWEST listed Torus temperature requiring entry into RC Point A of 31EO-EOP-010-2, RC RPV Control (NON-ATWS), is _____ .

A. ✓ uniformly throughout the Torus due to the design of the downcomers;
111°F

B. uniformly throughout the Torus due to the design of the downcomers;
121°F

C. directly under the area of the DW leak due to the energy being distributed directly to the Torus water in that area;
111°F

D. directly under the area of the DW leak due to the energy being distributed directly to the Torus water in that area;
121°F

Description:

The steam will enter the torus via a ring header and downcomers. The ring header helps to ensure steam distribution is approximately equal throughout the torus. The plausibility for local area heating of the torus is SRVs leaking.

Torus temperature control is necessary to preserve the capability of the plant's emergency heat sink to depressurize the reactor. The loss of the plant's pressure suppression capability due to high torus water temperature may permit high containment pressures to be reached since the decay heat energy in the form of pressure cannot be quenched. As torus water temperature increases, torus cooling is placed in service. If bulk torus temperature increases to 110°F, a manual reactor scram (Mode switch to S/D) is required per Tech Specs.

IAW 31EO-EOP-012-2, PC Primary Containment Control, entering either RC or RCA flowchart at point "A" assures that, if possible, the reactor is scrammed and shutdown by control rod insertion before the requirement for boron injection is reached. Entry into the RC [A] must be explicitly stated because conditions requiring entry into the PC flowchart do not necessarily

require entry into the RC [A] flowchart. Therefore, a scram may not have been initiated yet. IF Suppression Pool bulk average temperature exceeds **110ºF**, RC Point A is entered. 110°F is the limit for exceeding the Boron Injection Initiation Temperature.

K/A JUSTIFICATION:

This question satisfies the K/A statement by requiring the applicant to understand the concept of steam condensing into the Torus either by SRV discharge or LOCA and as a result of the Torus heating up from this steam condensation, the temperature at which a reactor scram is required.

The "B" distractor is plausible since the first part is correct. The second part is plausible if the applicant remembers that 120°F is the TS temperature at which the NPO enters 34GO-OPS-013-2, Normal Plant Shutdown, AND reduces RPV pressure to < 200 PSIG within 12 hours.

The "C" distractor is plausible if the applicant does not understand the purpose/design of the ring header/ downcomers and does not remember that the downcomer will evenly distribute the heat. The applicant could think the downcomer/ring header works like the SRVs since a SRV opening will heat up a local area of the Torus based on which SRV opens. The second part is plausible since it is correct.

The "D" distractor is plausible if the applicant does not understand the purpose/design of the ring header/ downcomers and does not remember that the downcomer will evenly distribute the heat. The applicant could think the downcomer/ring header works like the SRVs since a SRV opening will heat up a local area of the Torus based on which SRV opens. The second part is plausible if the applicant remembers that 120°F is the temperature at which the NPO enters 34GO-OPS-013-2, Normal Plant Shutdown, AND reduces RPV pressure to < 200 PSIG within 12 hours.

A. **Correct** - See description above.

B. **Incorrect** - See description above.

C. **Incorrect** - See description above.

D. **Incorrect** - See description above.

References:
NONE

K/A:

295026 Suppression Pool High Water Temperature

EK1. Knowledge of the operational implications of the following concepts as they apply to SUPPRESSION POOL HIGH WATER TEMPERATURE : (CFR: 41.8 to 41.10)

LESSON PLAN/OBJECTIVE:

EOP-PC-LP-20310, Primary Containment Control (PC), **Ver. 3.0**, EO 201.074.A.14 & EO 201.074.A.08

References used to develop this question:

31EO-EOP-012-2, PC Primary Containment Control, **Ver. 6.0**

Modified from ILT-7 NRC Exam 2012-301 Q#50

Original Question

A steam line break inside containment has occurred on **Unit 2**.

- o Drywell pressure is 10.5 psig and slowly increasing
- o Torus pressure is 10 psig and slowly increasing
- o Neither Drywell or Torus sprays have been initiated

Which ONE of the following describes the effect of the steam line break on Torus water temperature and requires Primary Containment sprays with these conditions?

The Torus water temperature will heat up _____

With the above conditions and at this time, _____ Sprays are REQUIRED to be placed in service.

A. uniformly throughout the Torus due to the design of the downcomers;

BOTH Drywell and Torus

B.✓ uniformly throughout the Torus due to the design of the downcomers;

ONLY Torus

C. directly under the area of the DW leak due to the energy being distributed directly to the Torus water in that area;

BOTH Drywell and Torus

D. directly under the area of the DW leak due to the energy being distributed directly to the Torus water in that area;

ONLY Torus

54. 295028G2.1.25 001/04401B11/200.002.A.02/MOD/P-AB/BOTH/295028G2.1.25/1/1/H/2/JSC/ELJ

Unit 2 has experienced a LOCA.

At 10:00, the following conditions exist:

o RTD 2T47-N001A	300°F
o RTD 2T47-N001K	275°F
o RPV pressure	1000 psig and steady
o 2B21-R623B, Wide Range (compensated)	-90 inches

Based on the above conditions, and IAW 34AB-B21-002-2, RPV Water Level Corrections,

Corrected RWL is _____ .

If reactor pressure decreases to 300 psig within the next fifteen (15) minutes, 2B21-R623B, _____ can be used for accurate RWL indication.

Reference Provided

A. -99 inches;
Fuel Zone ONLY

B. -99 inches;
Wide Range AND Fuel Zone

C. ✓ -102 inches;
Fuel Zone ONLY

D. -102 inches;
Wide Range AND Fuel Zone

Description:

Wide Range Yarway (Compensated or Uncompensated) Instrumentation is required for level monitoring AND Bulk Average Drywell temperature is greater than 150°F. In order to use the wide range instruments, EOP cautions 1 and 2 must be considered. The wide range instruments can not be used if they are showing erratic behavior or they do not meet the Minimum Indicated Level when using the Maximum Run Temperature (highest RTD in group). To determine the RWL, the applicant must determine the max temp for the instrument and subtract the correction factor if temp >165°F using attachment 4 of 34AB-B21-002-2.

Caution from 34AB-B21-002-2:
2B21-LI-R604A (2B21-LI-R604B) and 2B21-LR-R623A (2B21-LR-R623B)
(Wide Range Signals) cannot be used to determine RPV water level during rapid RPV depressurization below 500 psig.

K/A JUSTIFICATION:

This question satisfies the K/A statement by requiring the applicant to know how to determine RWL based on high DW temperature IAW 34AB-B21-002-2, RPV Water Level Corrections. The applicant must understand how to interpret the RWL wide range compensation graph.

The "A" distractor is plausible if the applicant uses the wrong RTD group to determine correction factor from graph. The applicant's mistake would be using -9 inches correction instead of the required -12 inches correction. The second part is plausible since it is correct.

The "B" distractor is plausible if the applicant uses the wrong RTD group to determine correction factor from graph. The applicant's mistake would be using -9 inches correction instead of the required -12 inches correction. The second part is plausible if the applicant does not understand that a rapid depressurization (700 psig in 15 minutes) below 500 psig would cause erratic behavior of the wide range instrument.

The "D" distractor is plausible since the first part is correct. The second part is plausible if the applicant does not understand that a rapid depressurization (700 psig in 15 minutes) below 500 psig would cause erratic behavior of the wide range instrument.

A. **Incorrect** - See description above.

B. **Incorrect** - See description above.

C. **Correct** - See description above.

D. **Incorrect** - See description above.

References:
34AB-B21-002-2, RPV Water Level Corrections, Att. 1 & Att. 4.
REMOVE CAUTION FROM BOTTOM OF ATT.1, PAGE 3.

K/A:

295028 High Drywell Temperature

G2.1.25 Ability to interpret reference materials, such as graphs, curves, tables, etc. (CFR: 41.10 / 43.5 / 45.12) 3.9 4.2

LESSON PLAN/OBJECTIVE:

B11-RXINS-LP-04404, Reactor Vessel Instrumentation, **Ver 7.0**, EO 200.002.A.02

References used to develop this question:

34AB-B21-002-2, RPV Water Level Corrections, **Ver 6.15**

Modified from HLT Database Q#295028G4.03-001

Original Question

Unit 2 has experienced a LOCA.

Plant conditions:

- o RTD 2T47-N001A ..... 305°F
- o RTD 2T47-N001K ..... 252°F
- o Reactor pressure ..... 700 psi and steady
- o 2B21-R623A, Wide Range (compensated) ..... (-)60 inches

Based on the above plant conditions.
Which one of the choices below correctly complete the following statement?

IAW 34AB-B21-002-2, "RPV Water Level Corrections," and using 2B21-R623A, "Wide Range RWL" indication, actual Reactor Water Level is determined to be _____.

REFERENCE PROVIDED (34AB-B21-002-2, RPV Water Level Corrections, Attachment 1(page 1 and 2 of 3) RTD Group assignments and first half of Caution 1, and Attachment 4 (page 1 of 1) Temperature correction graph,)

A. (-)53 inches

B. (-)60 inches

C.✓ (-)67 inches

D. (-)71 inches

55. 295030EA1.05 001/20310PC/201.075.A.11/MOD/P-EOP/BOTH/295030EA1.05/1/1/H/3/ARB/ELJ

Unit 1 was scrammed from 80% RTP.

- o RPV pressure is being controlled by LLS
- o RWL is -50 inches and steady
- o HPCI is the ONLY high pressure injection source
- o Torus level is 116 inches and decreasing at 2 inches/minute

IAW 31EO-EOP-012-1, Primary Containment Control,

One (1) minute later, the HPCI System is _____ .

Ten (10) minutes later, the Ring Header DOWNCOMER openings are _____ .

A. REQUIRED to have been manually shutdown; COVERED

B.✔ REQUIRED to have been manually shutdown; UNCOVERED

C. ALLOWED to continue injecting into the RPV; COVERED

D. ALLOWED to continue injecting into the RPV; UNCOVERED

Description:

The torus level needs to be maintained above the discharge of the HPCI steam turbine exhaust line to ensure adequate steam condensing. This precludes possible primary containment failure due to over pressurization caused by HPCI steam exhaust discharging directly into the torus air space. Operation of the HPCI System with its exhaust discharge line (located at 115 inches with Unit 2 at 110 inches) not submerged will directly pressurize the torus air space. HPCI operation is therefore secured, and prevented from restarting, to preclude the occurrence of this condition. NO instruction regarding RCIC operation is included in this step (or in an equivalent step) for two reasons:

The exhaust flow rate of RCIC is approximately equal to that of decay heat, and is thus consistent with the basis used for determining the Primary Containment Pressure Limit. Elevated torus pressure will cause the RCIC turbine to trip much sooner than the HPCI turbine.

Therefore the Unit 1 HPCI System will NOT be injecting when Torus water level drops below 115 inches.

The RPV is not permitted to remain at pressure if suppression of steam discharged from the RPV into the drywell cannot be assured. When the downcomer vent openings are not adequately submerged (Unit 1 is 102 inches and Unit 2 is 98 inches), any steam discharged from the RPV into the drywell may not condense in the torus before torus pressure reaches unacceptable levels.

Emergency RPV depressurization will be required at or before the point at which this low water level condition occurs.

Torus water level at which the SRV T-Quenchers are uncovered is 63.0 inches.

K/A JUSTIFICATION:

This question satisfies the K/A statement by requiring the applicant to know the operation of HPCI with Torus water level decreasing and then securing HPCI when Torus level can NOT be maintained >115 inches.

The "A" distractor is plausible since the first part is correct. The second part is plausible if the applicant thinks about the torus level at which the SRV T-Quenchers become uncovered (63.0 inches) and thinks this is the value for the Downcomers becoming uncovered (102 inches).

The "C" distractor is plausible if the applicant thinks about 110 inches on Unit 1 instead of that on Unit 2 which has a value of 115 inches and thinks one minute later HPCI will still be injecting. Unit Difference. The second part is plausible if the applicant thinks about the torus level at which the SRV T-Quenchers become uncovered (63.0 inches) and thinks this is the value for the Downcomers becoming uncovered (102 inches).

The "D" distractor is plausibleif the applicant thinks about 110 inches on Unit 1 instead of that on Unit 2 which has a value of 115 inches and thinks one minute later HPCI will still be injecting. Unit Difference. The second part is plausible since it is correct.

A. **Incorrect** - See description above.

B. **Correct** - See description above.

C. **Incorrect** - See description above.

D. **Incorrect** - See description above.

References:
NONE

K/A:

295030 Low Suppression Pool Water Level

EA1. Ability to operate and/or monitor the following as they apply to LOW SUPPRESSION POOL WATER LEVEL: (CFR: 41.7 / 45.6)

EA1.05 HPCI 3.5 3.5

REPLACED THE BELOW K/A AFTER PHONE CONVERSATION WITH CHIEF

EA1. Ability to operate and/or monitor the following as they apply to LOW SUPPRESSION POOL WATER LEVEL: (CFR: 41.7 / 45.6)

EA1.03 HPCS: Plant-Specific 3.4 3.4

LESSON PLAN/OBJECTIVE:

EOP-PC-LP-20310, Primary Containment Control (PC), **Ver. 3.0**, EO 201.075.A.11 & EO 201.075.A.13

References used to develop this question:

31EO-EOP-012-1, PC Primary Containment Control, **Ver. 6.0**
31EO-EOP-012-2, PC Primary Containment Control, **Ver. 6.0**
31EO-OPS-001-0, EOP General Information, **Ver 1.8**

Modified from HLT Database Q#295030EA1.02-001

Original Question

Unit 1 was scrammed from 80% power.

- RPV pressure is being controlled by LLS
- RWL is -153 inches and steady
- RCIC is the ONLY high pressure injection source
- Torus level is 114 inches and decreasing at 2 inches a minute

IAW 31EO-EOP-012-1, Primary Containment Control, which ONE of the choices below completes these statements?

The RCIC System _____ required to be shutdown/tripped.

The HIGHEST Torus water level at which an Emergency Depressurization is required, is BEFORE Torus level reaches _____ .

A.✓ is NOT;
102 inches

B. is NOT;
98 inches

C. is;
102 inches

D. is;

98 inches

56. 295031EK2.09 001/00401B31/004.003.A.02/MOD/SYS-I/BOTH/295031EK2.09/1/1/H/3/JSC/ELJ

Unit 2 is at 60% RTP with the following conditions:

- o 2A RFP is in AUTOMATIC
- o 2B RFP has just been transferred to the M/A Station

Subsequently, RFP 2A experiences a malfunction that results in RFP 2A speed lowering to 2100 rpm and stabilizes.

- o RWL is recovered to normal using the RFP 2B
- o LOWEST RWL reached was -8 inches

With the above conditions,

Of the listed RWL values, the HIGHEST RWL at which a Recirc Pump runback signal will FIRST be generated is _____ .

The FINAL Recirc Pump speed will be _____ .

A. ✔ 29 inches;
22%

B. 29 inches;
33%

C. 31 inches;
22%

D. 31 inches;
33%

Description:

#3 SL to 61%	
CBP median suction pressure low	[40 psig, 10 sec delay]
OR	
RFP median suction pressure low	[225 psig, 5 sec delay]

#4 SL Variable 100% to 33%
6.7 % speed decrease per ONE inch decrease in RWL (from 30 to 20 inches)

A #4 runback occurs due to RWL lowering to < 30 inches and the runback will cause recirc to lower to 33% speed since RWL lowers to < 20 inches.

The #1 runback will occur since RWL lowered to < 3 inches which caused the plant to scram. This satisfied the requirements for total F/W flow to be < 20%. The #1 runback will occur also due to RWL < 20 inches and total steam flow < 60% of previous 6 min average.

The #2 runback will not occur since neither RFP has a trip signal from TMR.

K/A JUSTIFICATION:

This question satisfies the K/A statement by requiring the applicant to know Recirc Runbacks logic. Three of the four runback signals use low RWL as an input.

The "B" distractor is plausible since the first part is correct. The second part is plausible since the conditions are met for a #4 runback to occur and the Recirc pumps would lower to 33% however a #1 runback is more limiting.

The "C" distractor is plausible if the applicant thinks that a #2 runback conditions have been met. All conditions are met for a #2 runback with the exception that neither RFP has a trip signal from the TMR. The second part is plausible since it is correct.

The "D" distractor is plausible if the applicant thinks that a #2 runback conditions have been met. All conditions are met for a #2 runback with the exception that neither RFP has a trip signal from the TMR. The second part is plausible since the conditions are met for a #4 runback to occur and the Recirc pumps would lower to 33% however a #1 runback is more limiting.

A. **Correct** - See description above.

B. **Incorrect** - See description above.

C. **Incorrect** - See description above.

D. **Incorrect** - See description above.

References:
NONE

K/A:

295031 Reactor Low Water Level

EK2. Knowledge of the interrelations between REACTOR LOW WATER LEVEL and the following: (CFR: 41.7 / 45.8)

EK2.09 Recirculation system: Plant-Specific 3.3 3.4

LESSON PLAN/OBJECTIVE:

B31-RRS-LP-00401, Reactor Recirculation System, Ver 10.5, EO 004.003.A.02

References used to develop this question:

34SO-B31-001-2, Reactor Recirculation System, **Ver 44.6**

Modified from HLT Database Q#202002K3.03-001 which was used on
HLT-7 2012-301 NRC Exam Q#3.

Original Question

Unit 2 is at 100% RTP when a malfunction causes a Recirc runback signal to Speed Limiter #1 on BOTH Recirc Pumps.

While the Recirc Pumps are reducing speed, INDICATED reactor water level on 2C32-R606A, B & C, "Narrow Range" instruments will _____.

The FINAL Recirc Pump speeds will be _____.

A. decrease;
22%

B. decrease;
33%

C.✓ increase;
22%

D. increase;
33%

57. 295032EK3.03 001/03901E51/039.012.A.02/MOD/P-EOP/BOTH/295032EK3.03/1/2/F/3/ARB/ELJ

Unit 2 is operating at 100% RTP when a pipe ruptures in the Torus Area.

The RCIC System has automatically isolated due to high temperatures in the Torus Area.

IAW 34SO-E51-001-2, Reactor Core Isolation Cooling (RCIC) System, the time delay for the RCIC isolation is _____ .

The reason for the RCIC System isolation at this setpoint is _____ .

A. 29 minutes;
because the Max Safe Operating temperature limit has been exceeded

B.✔ 29 minutes;
to limit radioactive release to the public to within FSAR DBA assumptions

C. 14 minutes;
because the Max Safe Operating temperature limit has been exceeded

D. 14 minutes;
to limit radioactive release to the public to within FSAR DBA assumptions

Description:

IAW 34SO-E51-001-2,
5.2.2 The RCIC System will automatically isolate upon receipt of any of the following signals:
5.2.2.4 Steam Leak Detection System High Temperatures:
Instrument Setpoint ≥ 165°F or ≥ 36°F diff temp for more than 29 minutes.
Technical Specifications Limit < 169°F OR < 42°F diff temp.

IAW TS Bases 3.3.6.1, The primary containment isolation instrumentation automatically initiates closure of appropriate primary containment isolation valves (PCIVs). The function of the PCIVs, in combination with other accident mitigation systems, is to limit fission product release during and following postulated Design Basis Accidents (DBAs). Primary containment isolation within the time limits specified for those isolation valves designed to close automatically **ensures that the release of radioactive material to the environment will be consistent with the assumptions used in the analyses for a DBA**.

The Max Safe Operating Temperature is defined as the highest temperature at which safe shutdown equipment will not fail NOR will personnel access required for safe shutdown be precluded. The Max Safe Operating Temperatures are based on Georgia Power analysis for **equipment qualification** in high temperature environments.

K/A JUSTIFICATION:

This question satisfies the K/A statement by requiring the applicant to know why a system

(RCIC) is isolated with area temperatures above the Maximum Normal Operating value.

The "A" distractor is plausible since the first part is correct. The second part is plausible if the applicant thinks about the Maximum Safe Operating temperatures and they are based upon Georgia Power EQ analysis and thinks that this is why the system is isolated.

The "C" distractor is plausible if the applicant remembers the HPCI system Steam Leak Detection System High Temperature isolation occurs after a 14 minute time delay. The second part is plausible if the applicant thinks about the Maximum Safe Operating temperatures and they are based upon Georgia Power EQ analysis and thinks that this is why the system is isolated.

The "D" distractor is plausible if the applicant remembers the HPCI system Steam Leak Detection System High Temperature isolation occurs after a 14 minute time delay. The second part is plausible since it is correct.

A. **Incorrect** - See description above.

B. **Correct** - See description above.

C. **Incorrect** - See description above.

D. **Incorrect** - See description above.

References:
NONE

K/A:

295032 High Secondary Containment Area Temperature

EK3. Knowledge of the reasons for the following responses as they apply to HIGH SECONDARY CONTAINMENT AREA TEMPERATURE : (CFR: 41.5 / 45.6)

EK3.03 Isolating affected systems 3.8 3.9*

LESSON PLAN/OBJECTIVE:

E51-RCIC-LP-03901, Reactor Core Isolation Cooling (RCIC), **Ver 6.1**, EO 039.012.A.02

References used to develop this question:

34SO-E41-001-2, High Pressure Coolant Injection (HPCI) System, **Ver 28.3**
34SO-E51-001-2, Reactor Core Isolation Cooling (RCIC) System, **Ver 25.1**

Modified from question used on DAEC 2009 NRC Exam Q#65.

Original Question

65. What is the reason for automatic closure of the RWCU Primary Containment Isolation Valves if a RWCU area high temperature were to occur.

    What is the reason for this requirement?

A.✓ To ensure that the release of radioactive material to the environment will be consistent with the assumptions used in the final safety analyses.

B. To minimize moisture buildup and overheating in the Standby Gas Treatment System charcoal beds.

C. To prevent exceeding the Environmental Qualification temperature limits on the electrical buses in the Turbine Building required for safe shutdown.

D. To ensure operator access to secondary containment for event mitigation actions.

58. 295033EK2.02 001/03701Z41/037.008.A.02/MOD/SYS-B/BOTH/295033EK2.02/1/2/F/3/JSC/ELJ

Maintenance is in the process of removing the **Unit 2** Steam Dryer from the RPV when the Steam Dryer momentarily becomes partially uncovered.

- o Contamination does not become Airborne as a result of the momentarily uncovering of the Steam Dryer

ALL Unit 2 Refueling Floor Area Radiation Monitors (ARMs) increase to 17 mr/hr before lowering to their pre-event value.

With the above conditions and NO operator actions,

The **Unit 2** SBGT System fans will _____ .

The Main Control Room Environmental Control (MCREC) System will _____ .

A. have automatically started;
have aligned to Pressurization Mode

B. have automatically started;
remain in the Standby Mode

C✔ remain in Standby;
have aligned to Pressurization Mode

D. remain in Standby;
remain in the Standby Mode

Description:

Phil, this was question 4 of 10 of the previously submitted questions. Changes were incorporated based on your ES-401-9 comments.

Any of the following signals for Unit 1 or Unit 2 will initiate all four SBGT Trains:

Unit 1 or 2 Reactor Zone exhaust high radiation:
- Unit 1: 18 mrem/hr on 1D11-K609 A-D
- Unit 2: 18 mrem/hr on 2D11-K609 A-D

Unit 1 or 2 Refueling Zone exhaust high radiation:
- Unit 1 18 mrem/hr on 1D11-K611-A-D
- Unit 2 18 mrem/hr on 2D11-K611 A-D, OR **6.9 mrem/hr on 2D11-K634 A-D**, OR **5.7 mrem/hr on 2D11-K635 A-D.**

High Drywell pressure (1.85 psig).
Low Reactor water level (-35 inches)

These radiation monitors are grouped such that it requires an "A" and a "B" Reactor Building high radiation monitor reaching a high radiation setpoint to start the "A" SBGT. "C" and "D" monitors would have to actuate to start the "B" SBGT. The Unit 2 Refueling Floor high radiation logic uses 12 detectors consisting of the K611's, K634's, and K635's. To actuate "A"

SBGT a K611A and K634B reaching a high radiation setpoint and would auto start SBGT "A".

SBGT will not start in this situation given the Steam Dryer momentarily becomes partially exposed and will remain wet therefore not allowing ventilation detectors to be directly affected. With the steam dryer being wet, it will remain as a point source vice allowing airborne particles to be moved through the ventilation system.

The Control Room Ventilation System will automatically switch to the Pressurization Mode, in order to protect Control Room personnel, on any of the following signals:

LOCA signal from Unit 1 or Unit 2
RF Area High Radiation (ARM) from Unit 1 or Unit 2 (15 mr/hr)
Main Steam Line High Flow from Unit 1 or Unit 2
Main Control Room Air Intake High Radiation

K/A JUSTIFICATION:

This question satisfies the K/A statement by requiring the applicant to evaluate which systems are actuated automatically from ARMs and/or PRMs (interrelations). The MCREC system will automatically shift to the pressurization mode due to the elevated area radiation levels on the Refuel Floor but SBGT will automatically initiate on process radiation monitors.

The "A" distractor is plausible if the applicant thinks SBGT will start on Area Radiation Monitor (ARM) signal on the refuel floor vice the ventilation radiation detectors. If the process radiation monitors indicated 16-17 mr/hr they will have exceeded 2D11-K634 and K635 setpoints for Unit 2 SBGT start signals. The applicant may think that these instruments are in the same vicinity therefore thinking that SBGT will start. The second part is plausible since it is correct.

The "B" distractor is plausible if the applicant thinks SBGT will start on Area Radiation Monitor (ARM) signal on the refuel floor vice the ventilation radiation detectors. If the process radiation monitors indicated 16-17 mr/hr they will have exceeded 2D11-K634 and K635 setpoints for Unit 2 SBGT start signals. The applicant may think that these instruments are in the same vicinity therefore thinking that SBGT will start. The second part is plausible if the applicant thinks the only radiation signal that will cause MCREC to shift to the pressurization mode is the Main Control Room air intake high radiation (0.9 mrem/hr). Based on this reasoning, since the radiation condition is limited to the Refuel Floor, MCREC would remain is the Standby Mode. Also plausible if the applicant thinks the signal to start MCREC comes from the same signal that causes secondary containment to isolate.

The "D" distractor is plausible since the first part is correct. The second part is plausible if the applicant thinks the only radiation signal that will cause MCREC to shift to the pressurization mode is the Main Control Room air intake high radiation (0.9 mrem/hr). Based on this reasoning, since the radiation condition is limited to the Refuel Floor, MCREC would remain is the Standby Mode. Also plausible if the applicant thinks the signal to start MCREC comes from the same signal that causes secondary containment to isolate.

A. **Incorrect -** See description above.

B. **Incorrect -** See description above.

C. **Correct** - See description above.

D. **Incorrect** - See description above.

References:
NONE

K/A:

295033 High Secondary Containment Area Radiation Levels

EK2. Knowledge of the interrelations between HIGH SECONDARY CONTAINMENT AREA RADIATION LEVELS and the following: (CFR: 41.7 / 45.8)

EK2.02 Process radiation monitoring system 3.8 4.1

LESSON PLAN/OBJECTIVE:

Z41-MCREC-LP-03701, Main Control Room Environmental Control System, **Ver 6.0**,
EO 037.008.A.02

References used to develop this question:

34SO-Z41-001-1, Control Room Ventilation System, **Ver 22.2**
34SO-T46-001-2, Standby Gas Treatment System, **Ver 14.14**

Modified from HLT Database Q#295023AA1.04-001 which was used on
HLT-7 2012-301 NRC Exam Q#49

Original Question

A refueling accident occurs on **Unit 2**.

The following Area Radiation Monitors (ARM) red Trip Lights illuminate at Control Room ARM Panel 2D21-P600:

- o 2D21-K601A, Reactor head laydown area
- o 2D21-K601M, Spent Fuel Pool & New Storage

Which ONE of the following predicts how the Main Control Room Environmental Control (MCREC) system is affected and operation of the ARMs?

With the above conditions, the MCREC system will _____ .

Trip setpoints, the ARM red TRIP lights _____ reset.

A. remain in the Normal Mode;
must be manually

B. remain in the Normal Mode;
will automatically

C.✓ align to the Pressurization Mode;
must be manually

D. align to the Pressurization Mode;
will automatically

59. 295036EA1.04 001/20325SCRR/201.093.A.01/MOD/P-EOP/BOTH/295036EA1.04/1/2/H/3/ARB/ELJ

Unit 2 is operating at 100% RTP when a leak occurs in Secondary Containment (SC) requiring entry into 31EO-EOP-014-2, SC Secondary Containment Control/ RR Radioactivity Release.

Subsequently, a loss of 2R25-S064, Instrument Bus 2A, occurs.

The Shift Supervisor directs the NPO to monitor SC water and radiation levels.

SC radiation levels _____ be monitored by using area radiation monitoring (ARM) instrumentation located in the Main Control Room.

Personnel _____ to determine that Max Normal SC Water level has been exceeded.

A. can NOT;
can use the Main Control Room SC sump alarms by themselves

B.✔ can NOT;
must be dispatched LOCALLY

C. can;
can use the Main Control Room SC sump alarms by themselves

D. can;
must be dispatched LOCALLY

Description:

The Secondary Containment Radiation monitors are powered from 2R25-S064, Instrument Bus 2A. Since this bus is de-energized, radiation levels can NOT be monitored from the Control Room ARM panel (Breaker #9).

A recent change to the Annunciator Response Procedures associated with Secondary Containments water level, requires local observation of water level for determination of Max Normal levels.

K/A JUSTIFICATION:

This question satisfies the K/A statement by requiring the applicant to determine if radiation levels can be monitored from the Main Control Room and if high area sump level annunciation can be used in the Main Control Room for determining if Max Normal SC Water levels have been exceeded.

The "A" distractor is plausible since the first part is correct. The second is plausible if the applicant remembers that the Maximum Normal water levels could be determined using sump level annunciators on the 2H11-P657 however SC water levels have been changed to 4 inches above floor level. The annunciators will still be alarm however level may not reach Max Normal levels.

The "C" distractor is plausible if the applicant thinks the power supply is Instrument Bus 2B vice Instrument Bus 2A for the ARM panel in the Control Room. The second is plausible if the applicant remembers that the Maximum Normal water levels could be determined using sump level annunciators on the 2H11-P657 however SC water levels have been changed to 4 inches above floor level. The annunciators will still be alarm however level may not reach Max Normal levels.

The "D" distractor is plausible if the applicant thinks the power supply is Instrument Bus 2B vice Instrument Bus 2A for the ARM panel in the Control Room. The second part is plausible since it is correct.

A. **Incorrect** - See description above.

B. **Correct** - See description above.

C. **Incorrect** - See description above.

D. **Incorrect** - See description above.

References:
NONE

K/A:

295036 Secondary Containment High Sump/Area Water Level

EA1. Ability to operate and/or monitor the following as they apply to SECONDARY CONTAINMENT HIGH SUMP/AREA WATER LEVEL : (CFR: 41.7 / 45.6)

EA1.04 Radiation monitoring: Plant-Specific 3.1 3.4

LESSON PLAN/OBJECTIVE:

EOP-SCRR-LP-20325, Secondary Containment / Radioactivity Release Control,
EO 201.093.A.01

Reference(s) used to develop this question:

A-20181, Plant Hatch Load List, 2R25 S064, **Ver. 39.0**
A-20182, Plant Hatch Load List, 2R25 S065, **Ver. 28.0**
31EO-EOP-014-2, SC Secondary Containment Control/ RR Radioactivity Release, **Ver. 11.0**

Modified from HLT Database Q#295036EA1.04-001 which was used on
Hatch ILT-6 2011-301 NRC Exam Q#59.

Original Question

Unit 2 is operating at 100% RTP when a leak occurs in Secondary Containment (SC) requiring entry into 31EO-EOP-014-2, SC Secondary Containment Control/ RR Radioactivity Release.

Subsequently, a loss of Instrument Bus 2A occurs.

The Shift Supervisor directs the NPO to monitor SC water and radiation levels.

Which ONE of the choices below completes the following statements?

SC radiation levels _____ be monitored by using area radiation monitoring (ARM) instrumentation located in the Main Control Room.

Personnel _____ to determine that Max Normal SC Water level has been exceeded.

A. can NOT;
can use the Main Control Room SC sump alarms by themselves

B.✓ can NOT;
must be dispatched LOCALLY

C. can;
can use the Main Control Room SC sump alarms by themselves

D. can;
must be dispatched LOCALLY

60. 295037EK3.03 001/20327CP3/201.089.A.02/MOD/P-EOP/BOTH/295037EK3.03/1/1/H/2/JSC/ELJ

Unit 2 was operating at 100% RTP when an ATWS occurred.

RC-1 actions are completed.

Reactor power stabilizes at 8% RTP.

Based on the above conditions and IAW 34AB-C71-001-2, Scram Procedure, the Recirc pumps will be _____ .

The reason RWL will be intentionally lowered is to _____ .

A. tripped;
DECREASE core inlet subcooling by uncovering feedwater spargers

B. tripped;
INCREASE void fraction inside the core shroud

C. operating at minimum speed;
DECREASE core inlet subcooling by uncovering feedwater spargers

D. operating at minimum speed;
INCREASE void fraction inside the core shroud

Description:

RC-1: IMMEDIATE SCRAM REACTIVITY CONTROL ACTIONS

1. INSERT MANUAL SCRAM. ☐
2. PLACE MODE SWITCH to SHUTDOWN. ☐
3. IF **BLUE** SCRAM LIGHTS are NOT ILLUMINATED, MANUALLY INITIATE ARI. ☐
4. CONFIRM **ALL RODS IN** by observing FULL IN LIGHTS, SPDS, OR RWM DISPLAY. ☐
5 NOTIFY SS of ROD POSITION CHECK. ☐
6. PLACE SDV ISOL. VLV SW to "ISOL" & CONFIRM **CLOSED**. ☐
7. IF NOT TRIPPED, PLACE RECIRC PUMPS at MINIMUM SPEED. ☐
8. IF REACTOR POWER IS ABOVE 5%, TRIP THE RECIRC PUMPS. ☐
9. INSERT SRMS AND IRMS. ☐
10. IF REACTOR POWER REMAINS ABOVE 5%, INJECT SBLC. ☐
11. SHIFT RECORDERS to read IRMS, when required. ☐
12. RANGE IRMS to bring reading on Scale. ☐
13. NOTIFY SS when above actions are complete. ☐

Ref: 34AB-C71-001-2

To prevent or mitigate the consequences of any large irregular neutron flux oscillations induced by neutronic/thermal-hydraulic instabilities, RWL is lowered sufficiently below the elevation of the feedwater sparger nozzles. This places the *feedwater spargers* in the *steam space* providing *effective heating* of the relatively cold feedwater and eliminating the potential for high core inlet subcooling.

K/A JUSTIFICATION:

This question satisfies the K/A statement by requiring the applicant to know the basis for lowering RWL during an ATWS.

The "B" distractor is plausible since the first part is correct. The second part is plausible since lowering RWL will cause the void fraction to increase inside the shroud however as steam production is reduced (power lowering due to *effective heating* of the relatively cold feedwater and eliminating the potential for high core inlet subcooling) void fraction will decrease back to its original value.

The "C" distractor is plausible since RC-1 has the step to place the recirc pumps at minimum speed if they are not tripped. The second part is plausible since it is correct.

The "D" distractor is plausible since RC-1 has the step to place the recirc pumps at minimum speed if they are not tripped. The second part is plausible since lowering RWL will cause the void fraction to increase inside the shroud however as steam production is reduced (power lowering due to *effective heating* of the relatively cold feedwater and eliminating the potential for high core inlet subcooling) void fraction will decrease back to its original value.

A. **Correct** - See description above.

B. **Incorrect** - See description above.

C. **Incorrect** - See description above.

D. **Incorrect** - See description above.

References:
NONE

K/A:

295037 SCRAM Condition Present and Reactor Power Above APRM Downscale or Unknown

EK3. Knowledge of the reasons for the following responses as they apply to SCRAM

UNKNOWN : (CFR: 41.5 / 45.6)

EK3.03 Lowering reactor water level 4.1* 4.5*

LESSON PLAN/OBJECTIVE:

EOP-CP3-LP-20327, Level Power Control (CP-3), **Ver 4.0**, EO 201.089.A.02

References used to develop this question:

31EO-EOP-017-2, ATWS Level Control, **Ver 13**
34AB-C71-001-2, Scram Procedure, **Ver 12.4**

Modified from HLT Database Q#G2.4.9-001

Original Question

Which ONE of the choices below completes the following statements concerning an ATWS condition on **Unit 1**?

IAW CP-3, the LOWEST listed Reactor power that would require RWL to be intentionally lowered is _____ RTP.

The basis for the EOP step below (lowering RWL) is to _____ .

Lower RPV Water Level to maintain between -90 in and -60 in with Table 13 Systems

A. 8%;
DECREASE core inlet subcooling of the incoming feedwater

B. 8%;
INCREASE void fraction inside the core shroud

C.✓ 6%;
DECREASE core inlet subcooling of the incoming feedwater

D. 6%;
INCREASE void fraction inside the core shroud

61. 295038EA1.01 001/10007D11/200.030.A.08/MOD/P-EP/BOTH/295038EA1.01/1/1/H/3/ARB/ELJ

The **Unit 1** SS suspects an abnormal offsite radiation release is occurring.

The following Main Stack annunciators are illuminated:

- o OFF GAS VENT RADIATION HIGH-HIGH (601-412)
- o OFF GAS VENT RADIATION HIGH (601-418)

The SS has directed 73EP-EIP-018-0, Prompt Offsite Dose Assessment (PODA), to be performed.

The current normal average daily site dose rate is 1.0 E^{-3} mR/hr.

The result from the PODA is a peak TEDE dose rate of 1.0 E^{-1} mR/hr.

Based on the above conditions,

The Main Stack Effluent Accident Range Gas Monitors (KAMANs) _____ .

IAW 73EP-EIP-018-0, a radioactive release from the Main Stack _____ in progress.

A. ✓ have automatically started;
is

B. have automatically started;
is NOT

C. are in standby;
is

D. are in standby;
is NOT

Description:

Radiation monitors are used to monitor, indicate, record, and annunciate radiation levels at various points from gasses flowing through the system. The following areas are sampled: Two **Pre-Treatment** Monitors (gamma compensated Ion Chambers) sample just prior to the holdup volume. Two **Post-Treatment** Monitors (Scintillation detectors) sample from the discharge of the first carbon bed in each train and just prior to the after filters. Two Stack Monitors (Scintillation detectors) sample the Off-Gas flow going up the stack and will activate the Main Stack Effluent Accident Range Gas Monitor on a Hi-Hi signal. The sample probes are arranged across the stack to ensure a representative sample is obtained. Two Carbon vault monitors (Geiger-Mueller) sample for buildup of radiation due to long-lived particulates.

Any combination of Inoperable, Downscale, or Hi-Hi-Hi radiation signals, simultaneously in both trip channels of the **Post-Treatment** Monitors, will cause the Main Stack Inlet Valve 2N62-F057 to prevent additional release. Cooler Condenser and Moisture Separator, 2N62-F030A/B, and Holdup volume 2N62-F085 Loop Seal Drain valves close to prevent an

inadvertent release, since these valves drain to Radwaste instead of the Main Condenser.

There are two gamma sensitive Scintillation detectors in the Main Stack Radiation Monitoring System. A gas sample is drawn through an Isokinetic Probe which is located high enough in the main stack vent stream to assure representative sampling. The sample passes through two shielded chambers where the radiation level of the vent gas is measured. The detectors have three alarms: Downscale-loss of power causes alarm, Hi-alarm only, and Hi-Hi - starts Main Stack Kaman and isolates normal Main Stack Radiation monitors.

IAW 73EP-EIP-018-0, Prompt Offsite Dose Assessment:

NOTE:The current calculated daily average site dose rate is E^{-03} mR/hr

19. IF the peak TEDE dose rate (mR/hr) value is an order of magnitude (10 times) higher than the current calculated daily average AND an emergency has been declared, THEN notify the Emergency Director a radioactive release is in progress.

20. IF the peak TEDE Dose Rate value exceeds 0.057 mR/hr (5.7 E-02 mR/hr), THEN notify the Emergency Director for possible emergency classification declaration or upgrade AND notify the affected Unit Shift Supervisor for possible EOP Actions.

K/A JUSTIFICATION:

This question satisfies the K/A statement by requiring the applicant to monitor the Main Stack gas monitoring system by observing the Pre-Treatment & Post-Treatment Radiation Monitors and based on the associated release rate alarm determine if the Main Stack has been isolated from Unit 2, thereby reducing the high off-site release rate.

The "B" distractor is plausible since the first part is correct. The second part is plausible if the applicant remembers the value of 0.57 mrem/hr associated with the RR-Radioactivity Release Control flowchart (entry condition) and determines 0.1 mrem/hr is less than the entry condition. A radioactive release occurs at 10 X normal values therefore would be occurring at 0.01 mrem/hr.

The "C" distractor is plausible if the applicant remembers that the Kamans do not automatically shutdown and thinks that they must be manually started. The applicant could also think about the operation of the Post Treatment Monitors and think that since they need a Hi-Hi-Hi alarm to cause an isolation that the Kamans need a Hi-Hi-Hi alarm also. The second part is plausible since it is correct.

The "D" distractor is plausible if the applicant remembers that the Kamans do not automatically shutdown and thinks that they must be manually started. The applicant could also think about the operation of the Post Treatment Monitors and think that since they need a Hi-Hi-Hi alarm to cause an isolation that the Kamans need a Hi-Hi-Hi alarm also. The second part is plausible if the applicant remembers the value of 0.57 mrem/hr associated with the RR-Radioactivity Release Control flowchart (entry condition) and determines 0.1 mrem/hr is less than the entry condition. A radioactive release occurs at 10 X normal values therefore would be occurring at 0.01 mrem/hr.

A. **Correct** - See description above.

B. **Incorrect** - See description above.

C. **Incorrect** - See description above.

D. **Incorrect** - See description above.

References:
NONE

K/A:

295038 High Off-Site Release Rate

EA1. Ability to operate and/or monitor the following as they apply to HIGH OFF-SITE RELEASE RATE : (CFR: 41.7 / 45.6)

EA1.01 Stack-gas monitoring system: Plant-Specific 3.9 4.2

LESSON PLAN/OBJECTIVE:

D11-PRM-LP-10007, Process Radiation Monitoring, **Ver 5.0**, EO 200.030.A.08

References used to develop this question:

NMP-EP-104-F07, Offsite Dose Assessment Hatch Prompt Offsite Dose Assessment, **Ver 1.0**
34AR-601-412-1, OFF GAS VENT RADIATION HIGH-HIGH, **Ver 4.4**
34AR-601-418-1, OFF GAS VENT RADIATION HIGH, **Ver 3.3**
34SO-N62-001-1, Off Gas System, **Ver. 19.3**

Modified from HLT Database Q#LT-200030-009

Original Question

The Main Stack Effluent Accident Range Monitors (KAMANS) will automatically start as soon as the Main Stack Rad Monitors exceed the _____ setpoint.

Once the KAMANS have started, they will remain in service until _____ .

A. Hi;
they are manually secured

B. Hi;
the Main Stack Rad Monitors readings are below the trip setpoint

C.✓ Hi-Hi;
they are manually secured

D. Hi-Hi;
the Main Stack Rad Monitors readings are below the trip setpoint

62. 300000G2.2.44 001/03501P51/P70/200.025.A.02/MOD/P-AB/BOTH/300000G2.2.44/2/1/H/2/JSC/ELJ

Unit 2 is operating at 80% RTP when 34AB-P51-001-2, Loss of Instrument or Service Air System or Water Intrusion into the Service Air System, is entered due to lowering air pressure.

The following conditions exist,

- o 2P52-F565, Rx Bldg Inst N2 To Non-Int Air El. 185 Isol Vlv, Danger Tagged CLOSED

- o SCRAM VLV PILOT AIR HDR PRESS HIGH/LOW (603-131) is illuminated
- o CRD HYD TEMP HIGH (603-140) is illuminated

Based on the above conditions and IAW 34AB-P51-001-2,

A Reactor scram _____ required to be inserted at this time.

If the crosstie between Unit One and Unit Two Service Air Systems CANNOT be opened, the _____ MSIVs will drift close as air pressure continues to lower.

A. is;
Inboard

B.✔ is;
Outboard

C. is NOT;
Inboard

D. is NOT;
Outboard

Description:
The loss of air is a complex situation for the plant in that many components fail in different ways throughout the plant. Based on the indications given, air pressure will be less than 70 psig based on the annunicator SCRAM VLV PILOT AIR HDR PRESS HIGH/LOW (603-131) setpoint is received when the scram air header pressure is >75 psig or <70 psig. This is confirmed due to the CRD HYD TEMP HIGH annunciator being received.

The 34AB-P51-001-2 requires a scram as follows:

1)SCRAM VLV PILOT AIR HDR PRESS HIGH/LOW (603-131) COINCIDENT with CRD HYD TEMP HIGH (603-140).
2) Scram pilot valve air header pressure less than or equal to 50 PSIG as indicated locally on 2C11-R013.

A loss of Instrument Air results in a difficult transient for operators even if all equipment operates as intended. Abnormal responses from many systems and components can occur simultaneously because a large number of components are supplied by Instrument Air. Identifying the affected components, their failure modes, and the resultant effect on system operation and system interactions is a complicated task. Valves may fail closed, open, or as-is;

controllers may fail with a maximum or minimum demand signal or may lockup with the pre-event demand output. Although most components are designed to fail in a safe position, some manual actions may be required to override or bypass component failures in order to minimize the severity of the subsequent transients.

A gradual loss of Instrument Air is also a difficult transient for operators. In that condition, components fail in a random sequence, depending on the rate of air pressure decrease in various portions of the system and the different pressure requirements for operating individual components. The random sequence of failures makes it more difficult for the operator to identify and diagnose the problems. Depending on the particular failure sequence, the type and severity of subsequent plant transients will vary in a non-predictable way.

Symptoms and Indications of an Instrument Air Failure in excess of Nitrogen Backup capabilities (Nitrogen backup valve 2P52-F565 is dangered tagged out). There are many other symptoms and indications but only one discussed here. Outboard Main Steam Isolation Valves drift closed (Inboard MSIVs are supplied by Drywell Pneumatic System).

K/A JUSTIFICATION:

This question satisfies the K/A statement by requiring the applicant to be able to diagnose the resultant effect on the operation of the affected unit (MSIVs) with the inability to open the cross connect between the units.

The "A" distractor is plausible since the first part is correct. The second part is plausible if the applicant thinks that the Inboard MSIVs are supplied with Plant Air vice Drywell Pneumatics.

The "C" distractor is plausible if the applicant thinks that along with the current annunciators that Scram Pilot Valve Air Header pressure less than or equal to 50 PSIG is required to also exist concurrently before the plant is required to be scrammed. The second part is plausible if the applicant thinks that the Inboard MSIVs are supplied with Plant Air vice Drywell Pneumatics.

The "D" distractor is plausible if the applicant thinks that along with the current annunciators that Scram Pilot Valve Air Header pressure less than or equal to 50 PSIG is required to also exist concurrently before the plant is required to be scrammed. The second part is plausible since it is correct.

A. **Incorrect** - See description above.

B. **Correct** - See description above.

C. **Incorrect** - See description above.

D. **Incorrect** - See description above.

References:
NONE

K/A:

300000 Instrument Air System (IAS)

G2.2.44 Ability to interpret control room indications to verify the status and operation of a system, and understand how operator actions and directives affect plant and system conditions. (CFR: 41.5 / 43.5 / 45.12) 4.2 4.4

REPLACED THE BELOW K/A AFTER PHONE CONVERSATION WITH CHIEF EXAMINER PHIL CAPEHART ON 3/27/2014.

G2.2.42 Ability to recognize system parameters that are entry-level conditions for Technical Specifications. (CFR: 41.7 / 41.10 / 43.2 / 43.3 / 45.3) 3.9 4.6

LESSON PLAN/OBJECTIVE:

P51-P52-P70-Plant Air-LP-03501, Plant Air Systems, **Ver 3.0**, EO 200.025.A.02

References used to develop this question:

34AB-P51-001-2, Loss of Instrument or Service Air System or Water Intrusion into the Service Air System, **Ver 4.9**

Modified from HLT Database which was used on HLT-4 NRC Exam Q#47

Original Question

Unit 2 is operating at 100% power.

- 2P52-F565, "Rx Bldg Inst N2 To Non-Int Air El 185 Isol Vlv", has been tagged in the closed position.
- Unit 2 experiences a loss of all Unit 2 Station Service Air Compressors.
- The air cross-tie valve between Unit 1 and Unit 2 cannot be opened due to a bent stem.

Which one of the following predicts the final MSIV positions with respect to the availability of a pneumatic supply?

A. The Inboard and Outboard MSIVs will remain OPEN.

B. The Inboard and Outboard MSIVs will eventually drift CLOSED.

C.✓ The Inboard MSIVs will remain OPEN;
The Outboard MSIVs will eventually drift CLOSED.

D. The Inboard MSIVs will eventually drift CLOSED;
The Outboard MSIVs will remain OPEN.

63. 400000K4.01 001/00901P42/200.014.A.06/BANK/SYS-I/BOTH/400000K4.01/2/1/H/3/ARB/ELJ

Unit 2 is operating at 30% RTP.

- Two (2) RBCCW pumps are running
- One (1) RBCCW pump is Danger tagged out of service

The following sequence of events occur:

- 11:00 - A loss of a 600V bus results in One (1) RBCCW pump being de-energized
- 11:03 - RBCCW system pressure decreases below the RBCCW pump auto start setpoint
- 11:05 - Power is restored to the 600V bus

Based on the above plant conditions,

After power is restored to the 600V bus, the Non-Essential Load Lockout _____ REQUIRED to be depressed prior to the restart of the associated RBCCW pump.

Manipulation of the RBCCW pump control switch at panel 2H11-P650 _____ REQUIRED to start the RBCCW pump that was de-energized.

A. is;
is

B. is;
is NOT

C. is NOT;
is

D. is NOT;
is NOT

Description:

2 Pumps are powered from 600 VAC Bus “C” (R23-S003). 1 Pump is powered from 600 VAC Bus “D” (R23-S004). Standby Pump auto-starts if system pressure decreases to 90 psig with the pump control switch in AUTO. The RBCCW Pumps cannot be started following an undervoltage trip on the associated 600 VAC bus **until** the Non-essential Load Lockout Pushbutton is depressed on H11-P652. This feature provides overload protection for the emergency diesel generators. Once this pushbutton is depressed, the pump control switch **will be** required to be placed into the off position, the returned to auto position and then the pump will **restart** if a low pressure condition exists. If a low pressure condition does not exist, the pump can be started by placing the switch to start. Either condition requires the Non-essential Load Lockout Pushbutton to be depressed, then manual actions with the control switch.

K/A JUSTIFICATION:

This question satisfies the K/A statement by requiring the applicant to know the design feature of the pump breaker/start logic in which the Non-essential load lockout must be depressed to allow the auto start of the standby pump. The applicant must also know the design feature of manipulating the standby pump control switch (reset trip) which allows the standby pump to auto start.

The "B" distractor is plausible since the first part is correct. The second is plausible if the applicant thinks RBCCW operates like PSW. On a LOSP, PSW pumps will trip and subsequently re-energize following a loading sequence once the EDGs tie to the bus. The applicant may also think they will automatically start since a low pressure start signal is present.

The "C" distractor is plausible if the applicant remembers that the non-essential load lockout does not have to be depressed for all equipment powered from the 600V Emergency Bus and thinks that the RBCCW pump is one of them. The second part is plausible since it is correct.

The "D" distractor is plausible if the applicant remembers that the non-essential load lockout does not have to be depressed for all equipment powered from the 600V Emergency Bus and thinks that the RBCCW pump is one of them. The second is plausible if the applicant thinks RBCCW operates like PSW. On a LOSP, PSW pumps will trip and subsequently re-energize following a loading sequence once the EDGs tie to the bus. The applicant may also think they will automatically start since a low pressure start signal is present.

A. **Correct** - See description above.

B. **Incorrect** - See description above.

C. **Incorrect** - See description above.

D. **Incorrect** - See description above.

References:
NONE

K/A:

400000 Component Cooling Water System (CCWS)

K4. Knowledge of CCWS design feature(s) and or interlocks which provide for the following: (CFR: 41.7)

K4.01 Automatic start of standby pump 3.4 3.9

LESSON PLAN/OBJECTIVE:

P42-RBCCW-LP-00901, Reactor Building Closed Cooling Water **Ver. 3.0**, EO 200.014.A.06

References used to develop this question:

34AR-650-239-2, RBCCW Pumps Disch Press Low, **Ver. 2.2**

Bank question from HLT Database bank Q# 400000K4.01 005

64. 600000AK1.02 001/03601FPS/200.092.A.01/BANK/P-AB/BOTH/600000AK1.02/1/1/F/2/JSC/ELJ

Which ONE of the following plant fire locations REQUIRES a manual reactor scram IAW 34AB-X43-001-2, "Fire Procedure", when a major fire exists.

A. Turbine Building Unit 2 East Cableway

B. Unit Auxilary Transformer

C. ✔ Oil Storage Tank Room

D. Intake Structure

Description:

OIL STORAGE TANK ROOM
-De-energize local electrical equipment as necessary.
-For a major fire, enter 34AB-C71-001-2, Scram Procedure, AND SCRAM the reactor.

Of the listed fire locations, only Major Oil fires require the unit to be scrammed.

K/A JUSTIFICATION:

This question satisfies the K/A statement by requiring the applicant to have the knowledge of the operational implications of having a major fire in the Plant (oil fire) and the required actions to be taken IAW 34AB-X43-001-2, Fire Procedure.

The "A" distractor is plausible since the Fire Procedure has actions concerning a fire in the Turbine Building Unit 2 East Cableway if a scram has occurred. The team will have to perform safe shutdown actions listed in its appropriate attachment.

The "B" distractor is plausible since the unit has to be shutdown per 34GO-OPS-014-2, Fast Reactor Shutdown. The Fire Procedure has actions concerning a fire in the Unit Auxilary Transformer if a scram has occurred. The team will have to perform safe shutdown actions listed in its appropriate attachment.

The "D" distractor is plausible since the unit has to be shutdown per 34GO-OPS-014-2, Fast Reactor Shutdown if PSW header pressure cannot be maintained $\geq$ 60 psig or temperatures start to increase on PSW cooled components. The Fire Procedure has actions concerning a fire in the Intake Structure if a scram has occurred. The team will have to perform safe shutdown actions listed in its appropriate attachment.

A. **Incorrect** - See description above.

B. **Incorrect** - See description above.

C. **Correct** - See description above.

D. **Incorrect** - See description above.

References:
NONE

K/A:

600000 Plant Fire On Site

AK1 Knowledge of the operation applications of the following concepts as they apply to Plant Fire On Site:

AK1.02 Fire Fighting 2.9 3.1

LESSON PLAN/OBJECTIVE:

X43-FPS-LP-03601, Fire Protection System, **Ver 5.0**, EO 200.092.A.01

References used to develop this question:

34AB-X43-001-2, Fire Procedure, **Ver 14.2**

Bank Question originally used on HLT 5 NRC exam Q#64

65. 700000G2.2.44 001/02706S11/200.116.A.01/BANK/P-AB/BOTH/700000G2.2.44/1/1/H/3/ARB/ELJ

Unit 1 and **Unit 2** are operating at 100% RTP.

Following a grid disturbance, the following conditions/alarms exist:

- o 4160 Bus 1E Voltage Low, (652-122)
- o 4160 Bus 1F Voltage Low, (652-222)
- o 4160 Bus 1G Voltage Low, (652-322)

- o 4160 Bus 2E Voltage Low, (652-122)
- o 4160 Bus 2F Voltage Low, (652-222)
- o 4160 Bus 2G Voltage Low, (652-322)

- o All 4160 VAC buses indicate 3820 VAC

- o Voltage in the 230 KV switchyard is 231 KV

- o The load dispatcher reports that these conditions will exist for 4 hours

IAW 34AB-S11-001-0, Operation With Degraded Voltage, and the existing conditions,

The 4160 VAC Emergency Bus voltages are _____ the MINIMUM ACCEPTABLE voltage.

One (1) hour later, _____ required to be supplying power to an Emergency Bus on <u>each</u> Unit.

A. ✔ less than;
ONLY one EDG is

B. less than;
NO EDGs are

C. greater than;
ONLY one EDG is

D. greater than;
NO EDGs are

Description:

34AB-S11-001-0, "Operation With Degraded Voltage," section 1.0 states that "Normal minimum voltage with either Unit in Modes 1, 2, or 3 is **233kV**. This means that the switchyard voltage is less than the normal minimum voltage level.

Step 4.4 states "<u>IF</u> the 4160 VAC bus voltages <u>CANNOT</u> be maintained above 3825VAC (Tech Spec), the following action will be taken:". This means that the 4160 VAC Emergency Bus voltages are less than the minimum acceptable voltages.

Step 4.4.3 states "IF the 4160 VAC Bus voltages are NOT RESTORED to acceptable levels WITHIN 30 minutes, perform the following to maintain 4160V 1E emergency bus voltage. (Two handed operations will be necessary):

4.4.3.1 Start the 1R43-S001A D/G, using the start switch, panel 1H11-P652.
4.4.3.2 Start the 2R43-S001A D/G, using the start switch, panel 2H11-P652

K/A JUSTIFICATION:

This question satisfies the K/A statement by requiring the applicant to interpret control room indications for 4160 V Emergency bus alarms/voltages along with 230 KV switchyard voltages and then determine if the minimum voltage still exists and the number of EDGs to be placed in service IAW the abnormal procedure.

The "B" distractor is plausible since the first part is correct. The second part is plausible if the applicant remembers the TS requirement to restore 4160 VAC bus voltages to acceptable levels within 1 hour (stated in 34AB-S11-001-0 step 4.4). The applicant then thinks he has 30 minutes more to start a EDG on each Unit for a total of 1.5 hours. The procedure has both the 1 hour and the 30 minute requirement being performed simultaneously.

The "C" distractor is plausible if the applicant remembers the TS requirement for minimum voltage on starting the EDGs is ≥ 3740 V and ≤ 4243 V. This requirement is checked using several Surveillance Requirements (SRs) in TS. These include 3.8.1.2, 3.8.1.5, 3.8.1.7, 3.8.1.9, 3.8.1.10, 3.8.1.13, 3.8.1.17, and 3.8.1.18. The second part is plausible since it is correct.

The "D" distractor is plausible if the applicant remembers the TS requirement for minimum voltage on starting the EDGs is ≥ 3740 V and ≤ 4243 V. This requirement is checked using several Surveillance Requirements (SRs) in TS. These include 3.8.1.2, 3.8.1.5, 3.8.1.7, 3.8.1.9, 3.8.1.10, 3.8.1.13, 3.8.1.17, and 3.8.1.18. The second part is plausible if the applicant remembers the TS requirement to restore 4160 VAC bus voltages to acceptable levels within 1 hour (stated in 34AB-S11-001-0 step 4.4). The applicant then thinks he has 30 minutes more to start a EDG on each Unit for a total of 1.5 hours. The procedure has both the 1 hour and the 30 minute requirement being performed simultaneously.

A. **Correct** - See description above.

B. **Incorrect** - See description above.

C. **Incorrect** - See description above.

D. **Incorrect** - See description above.

References:
NONE

K/A:

700000 Generator Voltage and Electric Grid Disturbances

G2.2.44 Ability to interpret control room indications to verify the status and operation of a system, and understand how operator actions and directives affect plant and system conditions. (CFR: 41.5 / 43.5 / 45.12) 4.2 4.4

LESSON PLAN/OBJECTIVE:

S11-LP-02706-02, Basic Grid Operating Concepts, **Ver. 2.0**, EO 200.116.A.01

References used to develop this question:

34AB-S11-001-0, Operation With Degraded Voltage, **Ver. 4.0**

Original Question-question HLT bank Q# 700000G2.4.45 001

66. G2.1.23 001/00201N21/026.029.A.01/MOD/SYS-I/BOTH/G2.1.23/3/F/3/JSC/ELJ

Unit 2 is performing Low Pressure Feedwater Injection IAW 34SO-N21-007-2, Condensate and Feedwater System, during a Reactor startup.

The following conditions exist:

- o One Condensate Pump is running
- o One Condensate Booster Pump running

- o Condensate/Feed system is lined up for injection
- o Turbine Bypass valves are controlling RPV pressure

- o 2N21-F165, Cleanup Recirc FCV, is throttled open to maintain RWL

Based on the above conditions,

As RPV pressure increases, 2N21-F165 will be throttled in the _____ direction.

IAW 34SO-N21-007-2, to avoid excessive vibration on the piping returning to the Main Condenser, the MAXIMUM throttled position allowed for 2N21-F165 is _____ .

A. ✔ close;
55%

B. close;
70%

C. open;
55%

D. open;
70%

Description:

2N21-F165, Cleanup Recirc valve, is located downstream of the RFPs and is used for multiple purposes. It is used for short/long cycle cleanup prior to injecting FW into the RPV during a startup. Water is cleaned up first in short cycle then long cycle. While performing long cycle cleanup, N21-F006A/B, FW Isolation s moving water through the demins. Water is directed back to the condenser through 2N21-F165. From long cycle, feedwater is injected to the RPV by opening the FW Isolation Valves. Discharge pressure is controlled by throttling 2N21-F165 and 2N21-F111, Startup Level Control Valve. If 2N21-F165 is throttled close (less directed back to condenser), FW pressure will increase until greater than RPV pressure. This d/p will cause flow to RPV and RWL will increase.

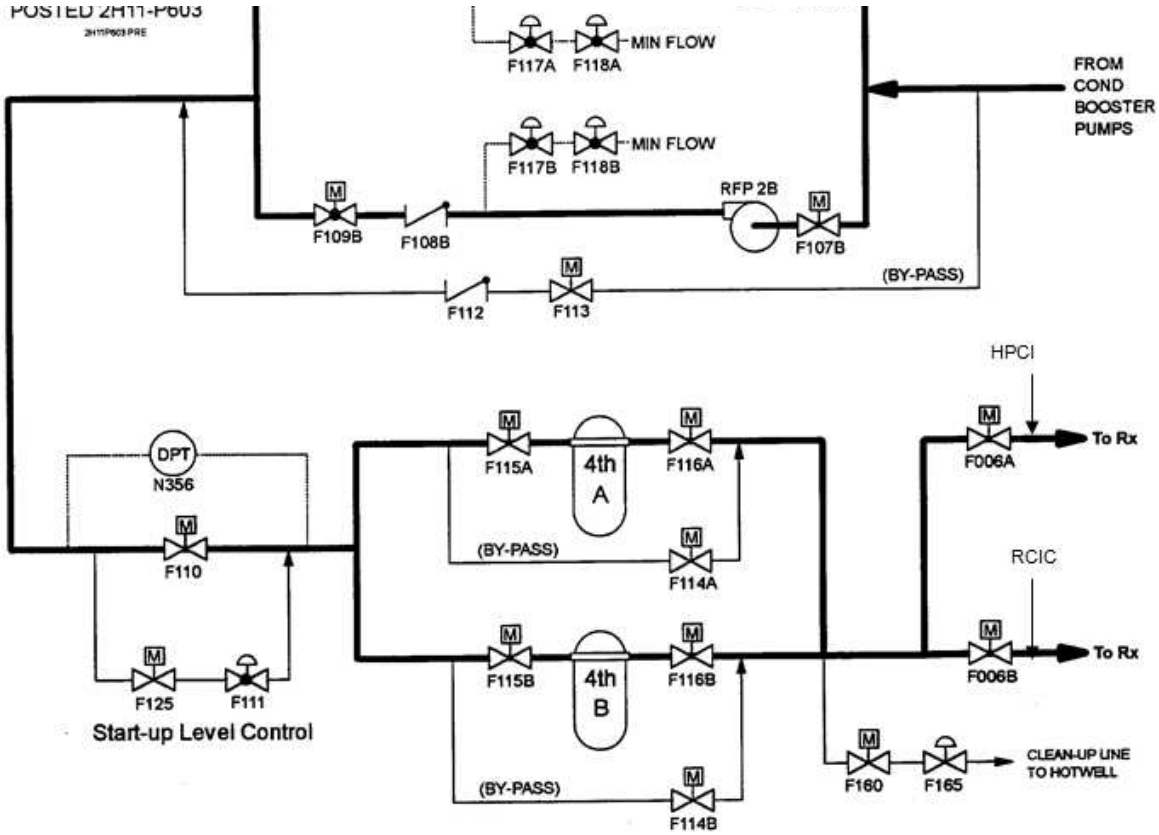

Per Caution in 34SO-N21-007-2, Condensate and Feedwater Sytem-2N21-F165, Cleanup Recirc valve, must not be opened more than 70% with only a Condensate pump running or more than 55% with a Condensate Booster Pump running to avoid excessive vibration on the piping returning to the Main Condenser.

K/A JUSTIFICATION:

This question satisfies the K/A statement by requiring the applicant to understand how to control RWL during a reactor startup while at a low power condition. This step is performed per 34SO-N21-007-2 section 7.1.6, Low Pressure Feedwater Injection and is an integrated part of a reactor startup.

The "B" distractor is plausible since the first part is correct. The second part is plausible if the applicant thinks 70% is the limit since this is the limit if only a Condensate pump is operating. The valve has a lower limit with a CBP running to prevent excessive vibration from occurring.

The "C" distractor is plausible if the applicant thinks 2N21-F165, Cleanup Recirc Valve, is similiar to the operation of 2N21-F111, Startup Level Control Valve. Both valves are used in conjunction with each other during startups while at low power. If 2N21-F111 is throttled in the close direction as RPV pressure increases, RWL will decrease since the valve is in line with the flowpath. The second part is plausible since it is correct.

The "D" distractor is plausible if the applicant thinks 2N21-F165, Cleanup Recirc Valve, is similiar to the operation of 2N21-F111, Startup Level Control Valve. Both valves are used in conjunction with each other during startups while at low power. If 2N21-F111 is throttled in the close direction as RPV pressure increases, RWL will decrease since the valve is in line with the flowpath. The second part is plausible if the applicant thinks 70% is the limit since this is the

limit if only a Condensate pump is operating. The valve has a lower limit with a CBP running to prevent excessive vibration from occurring.

A. **Correct** - See description above.

B. **Incorrect** - See description above.

C. **Incorrect** - See description above.

D. **Incorrect** - See description above.

References:
NONE

K/A:

2.1 Conduct of Operations

G2.1.23 Ability to perform specific system and integrated plant procedures during all modes of plant operation. (CFR: 41.10 / 43.5 / 45.2 / 45.6) 4.3 4.4

LESSON PLAN/OBJECTIVE:

N21-CNDFW-LP-00201, Condensate and Feedwater System, **Ver 9.1**, 026.029.A.01

References used to develop this question:

34SO-N21-007-2, Condensate and Feedwater System, **Ver 52.1**

Modified from HLT Database Q#LT-026029-006

Original Question

Unit 2 Startup is in progress with one Condensate and one Condensate Booster pump running. The Condensate and Feedwater System is in a Long Cycle Cleanup mode with the Cleanup Recirc CV, 2N21-F165, 76% opened.

Which ONE of the choices below completes the following statement?

IAW 34SO-N21-007-2, "Condensate & Feedwater System", Section 7.3.3, "Condensate System Long Cycle Startup", the required procedure action for the above conditions is to immediately _____ for the cleanup recirc valve.

A. increase the valve position by 24%.

B. decrease the valve position by 6%.

C.✓ decrease the valve position by 21%.

D. decrease the valve position by 76%.

67. G2.1.40 001/04502F15/300.048.A.03/MOD/P-NORM/BOTH/G2.1.40/3/F/3/ARB/ELJ

Unit 2 is performing fuel movement in the RPV.

IAW 34FH-OPS-001-0, Fuel Movement Operation,

The Reactor Mode Switch _____ REQUIRED to be LOCKED in the REFUEL position.

The MINIMUM RPV water level for fuel movement to continue is _____ above the top of the irradiated fuel assemblies seated in the RPV.

A. is;
21 feet

B.✔ is;
23 feet

C. is NOT;
21 feet

D. is NOT;
23 feet

Description:

IAW 34FH-OPS-001-0, Fuel Movement Operation, Attachment 1 step 1.2.6 states "Reactor Mode Switch is *locked* in the *REFUEL* position and key removed". Step 1.2.7 states "Reactor water level is at least 23 feet above the top of the irradiated fuel assemblies seated in the RPV".

Also in Limitations, steps 5.2.2 & 5.2.3 state:

5.2.2 Fuel movements in the reactor vessel may be performed only WHEN the Reactor Mode switch is **LOCKED** in the **REFUEL** position.

5.2.3 Reactor Vessel water level shall be maintained **>23**' and Fuel Pool Water level shall be maintained **>21 fee**t, above the top of the fuel assemblies seated in the Vessel and Fuel Pool. Fuel Pool level readings can be obtained from 1T24-R001 and 2T24-R001, Fuel Pool level indicators, located in the Fuel Pools.

K/A JUSTIFICATION:

This question satisfies the K/A statement by requiring the applicant to know the Refueling administrative requirements for the position of the Reactor Mode switch and the minimum requirement for water level for fuel movement to continue.

The "A" distractor is plausible since the first part is correct. The second is plausible if the applicant remembers that 21 feet is the requirement for fuel pool level not the requirement for fuel assemblies seated in the RPV.

The "C" distractor is plausible if the applicant remembers the mode switch must be in the Refuel position and thinks the only time the mode switch is locked is when it is locked in the Shutdown position due to INOP Nuclear Instruments. The second is plausible if the applicant remembers that 21 feet is the requirement for fuel pool level not the requirement for fuel assemblies seated in the RPV.

The "D" distractor is plausible if the applicant remembers the mode switch must be in the Refuel position and thinks the only time the mode switch is locked is when it is locked in the Shutdown position due to INOP Nuclear Instruments. The second is plausible since it is correct.

A. **Incorrect** - See description above.

B. **Correct** - See description above.

C. **Incorrect** - See description above.

D. **Incorrect** - See description above.

References:
NONE

K/A:

2.1 Conduct of Operations

G2.1.40 Knowledge of refueling administrative requirements.
(CFR: 41.10 / 43.5 / 45.13) 2.8 3.9

LESSON PLAN/OBJECTIVE:

F15-RF-LP-04502, Refueling, **Ver. 4.0**, EO 300.048.A.03 & EO 300.048.A.01

References used to develop this question:

34FH-OPS-001-0, Fuel Movement Operation, **Ver. 25.4**

Modified from HLT Database Q#G2.1.40-002

Original Question

IAW 34FH-OPS-001-0, Fuel Movement Operation, which ONE of the choices below is the required Reactor Mode Switch position and the MINIMUM Reactor Pressure Vessel (RPV) water level for fuel movement to occur in the RPV?

Fuel movement in the RPV will be performed when the Reactor Mode Switch is in the _____ position.

The MINIMUM RPV water level for fuel movement to continue is _____ feet above the top of the irradiated fuel assemblies seated in the RPV.

A.✓ locked REFUEL;
23

B. SHUTDOWN;
21

C. SHUTDOWN;
23

D. locked REFUEL;
21

68. G2.2.21 001/00701E11/100.035.A.03/BANK/P-NORM/BOTH/G2.2.21/3/H/3/JSC/ELJ

Given the following:

1E11-F017A, RHR Injection valve, was declared INOPERABLE for preventative maintenance (PM).

Following the PM, operators performed the stroke test on 1E11-F017A IAW 34SV-E11-002-1, RHR Valve Operability.

The stroke test data is shown below:

Column 1	Column 2		Column 3				Column 4		Column 5	
VALVE NO.	Reference Stroke OPER. TIME (SEC)		CALCULATED ALLOWABLE TIMES (SEC)				OPERATING TIMES (SEC)		MAXIMUM TIME LIMIT (SEC)	
	OPEN	CLOSE	OPEN		CLOSE		OPEN	CLOSE	OPEN	CLOSE
1E11-F017A MOV	24.2	N/A	20.6	27.8	N/A	N/A	30.5	N/A	≤ 34	N/A

IAW 34SV-E11-002-1,

To time 1E11-F017A OPEN, the NPO will START the stopwatch when the _____ .

Based on the above data, 1E11-F017A _____ be IMMEDIATELY declared OPERABLE.

A. control switch is placed to OPEN;
can

B. control switch is placed to OPEN;
can NOT

C. red light FIRST illuminates;
can

D. red light FIRST illuminates;
can NOT

Description:

34SV-E11-002-1, RHR Valve Operability, step 4.3.5 states: Full-stroke time is that time interval from initiation of the actuating signal to the end of the actuation cycle. Valves will be timed from WHEN the switch is positioned UNTIL either the green light EXTINGUISHES (open) OR the red light EXTINGUISHES (close). Step 7.7.2.2 states: Valves with OPERATING times that do NOT meet the CALCULATED ALLOWABLE time will be immediately retested OR declared inoperable. They can not be immediately declared OPERABLE.

K/A JUSTIFICATION:

This question satisfies the K/A statement by requiring the applicant to know the requirements to return a component to operable status. The valve is inoperable prior to re-testing and the applicant has to make the determination to restore it to operable based on surveillance performance.

The "A" distractor is plausible since the first part is correct. The second is plausible if the applicant thinks that since the valve meet the Maximum Time Limit, it can be immediately declared operable. The valve must be immediately re-tested.

The C" distractor is plausible if the applicant thinks timing occurs when the red light first illuminates and does not know the procedure requirement. The second is plausible if the applicant thinks that since the valve meet the Maximum Time Limit, it can be immediately declared operable. The valve must be immediately re-tested.

The "D" distractor is plausible if the applicant thinks timing occurs when the red light first illuminates and does not know the procedure requirement. The second part is correct.

A. **Incorrect** - See description above.

B. **Correct** - See description above.

C. **Incorrect** - See description above.

D. **Incorrect** - See description above.

References:
NONE

K/A:

2.2 Equipment Control

G2.2.21 Knowledge of pre- and post-maintenance operability requirements. (CFR: 41.10 / 43.2) 2.9 4.1

LESSON PLAN/OBJECTIVE:

E11-RHR-LP-00701, Residual Heat Removal System, **Ver 9.1**, EO 100.035.A.03
LT-LP-30005, Technical Specifications, **Ver 10.1**, EO 300.006.A.23

References used to develop this question:

34SV-E11-002-1, RHR Valve Operability, **Ver 20.1**

Bank question used on 2011 HLT 6 NRC exam question #69

69. G2.2.36 001/03001T46/030.002.A.06/MOD/P-NORM/BOTH/G2.2.36/3/F/3/ARB/ELJ

Unit 1 and **Unit 2** are operating at 100% RTP. On your Control Room tour during turnover, you note the change in status in the Standby Gas Treatment System (SBGT) as shown below:

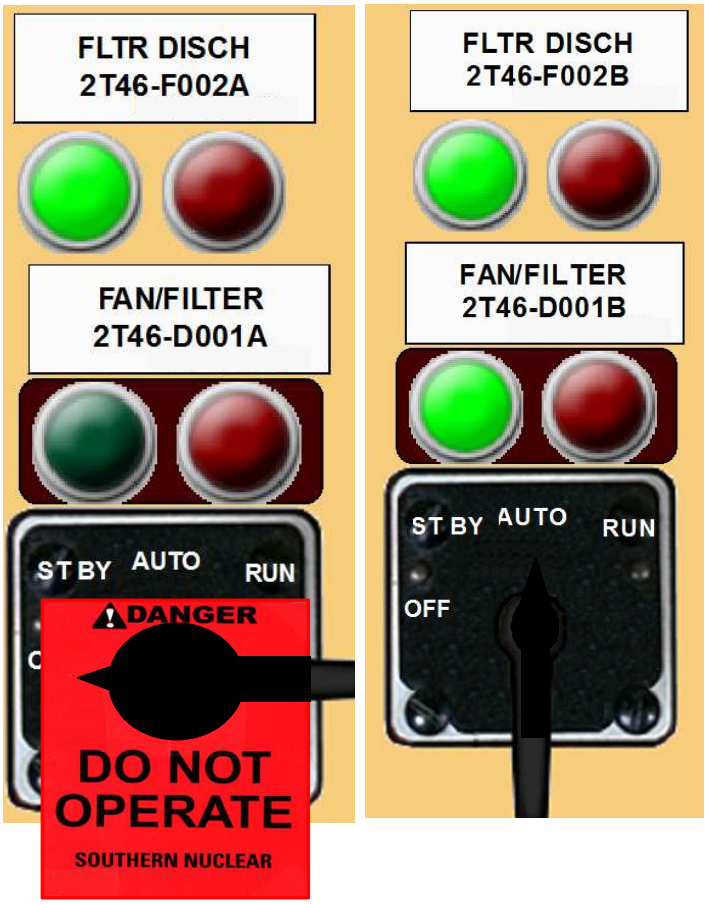

With the above status of SBGT,

Troubleshooting on the feeder breaker to _____ will impact the LCO for the SBGT System if the troubleshooting activity resulted in tripping the feeder breaker to the MCC.

A✓ 2R24-S012, Rx. Bldg. MCC 2B

B. 2R24-S013, Rx. Bldg. MCC 2A

C. 2R24-S014, Rx. Bldg. MCC 2D

D. 2R24-S015, Rx. Bldg. MCC 2F

Description:

The following table lists the power supplies for U1 & U 2 SBGT Systems:

Component	Power Supply
SBGT Fan 2T46-C001A	600/208 VAC Essential MCC 2C (2R24-S011)
SBGT Fan 2T46-C001B	600/208 VAC Essential MCC 2B (2R24-S012)
SBGT Fan 1T46-C001A	600/208 VAC Essential MCC 1C (1R24-S011)
SBGT Fan 1T46-C001B	600/208 VAC Essential MCC 1B (1R24-S012)

With SBGT 2A "Danger" tagged out of service and inoperable, a 7 day Required Action Statement (TS 3.6.4.3 Condiation B) exists. With Maintenance performing troubleshooting activities on the feeder breaker for 2R24-S012, Rx. Bldg. MCC 2B, which 2R24-S012 is the power supply to SBGT 2B, if this breaker trips, both Unit 2 SBGT Systems will be inoperable. TS 3.6.4.3 Condition E, Required Action E.1 would then be entered requiring LCO 3.0.3 immediately.

K/A JUSTIFICATION:

This question satisfies the K/A statement by requiring the applicant to determine the potential effect (analyze) of troubleshooting (maintenance activity) a power source on the LCO for the SBGT System.

The "B" distractor is plausible if the applicant remembers that this MCC is located in the Unit 2 Reactor Building (same elevation as 2R24-S012) and believes this bus is the power supply to SBGT 2B and concludes that troubleshooting on this bus will effect the LCO for SBGT.

The "C" distractor is plausible if the applicant remembers that this MCC is located in the Unit 2 Reactor Building (same elevation as 2R24-S012) and believes this bus is the power supply to SBGT 2B and concludes that troubleshooting on this bus will effect the LCO for SBGT.

The "D" distractor is plausible if the applicant remembers that this MCC is located in the Unit 2 Reactor Building (same elevation as SBGT 2B) and believes this bus is the power supply to SBGT 2B and concludes that troubleshooting on this bus will effect the LCO for SBGT.

A. **Correct** - See description above.

B. **Incorrect** - See description above.

C. **Incorrect** - See description above.

D. **Incorrect** - See description above.

References:
NONE

K/A:

2.2 Equipment Control

G2.2.36 Ability to analyze the effect of maintenance activities, such as degraded power sources, on the status of limiting conditions for operations.
(CFR: 41.10 / 43.2 / 45.13) 3.1 4.2

LESSON PLAN/OBJECTIVE:

T46-SBGT-LP-03001, Standby Gas Treatment System, **Ver. 6.0**, EO 030.002.A.06 & EO 300.010.C.01

References used to develop this question:

34SO-R23-001-2, 600V/480V AC System, **Ver. 8.0**
U1 TS 3.6.4.3, Standby Gas Treatment (SGT) System, **Amendment 256**
U2 TS 3.6.4.3, Standby Gas Treatment (SGT) System, **Amendment 135**

Modified for Plant Hatch from 2010 Oyster Creek NRC Exam Q#68

Original Question

Troubleshooting on the feeder breaker to ...

A. USS 1A2

B. USS 1B2

C. USS 1B3

D. VMCC 1B2

Answer: B

70. G2.3.11 001/20312EOP101/013.054.A.07/BANK/P-EOP/BOTH/G2.3.11/3/F/3/JSC/ELJ

Which ONE of the following is the BASIS for restarting the Turbine Building (TB) Ventilation when executing 31EO-EOP-014-2, “SC Secondary Containment Control - RR Radioactivity Release Control"?

Restarting the TB Ventilation _____ **AND** assures a release from the TB Ventilation System is monitored prior to exiting the _____ .

A. preserves personnel accessibility;
Main Stack

B. ✔ preserves personnel accessibility;
Reactor Building Stack

C. maintains equipment operability;
Main Stack

D. maintains equipment operability;
Reactor Building Stack

Description:

Continued personnel access to the turbine building may be essential for responding to emergencies or transients which may degrade into emergencies. The turbine building is not an air-tight structure. A radioactivity release inside the turbine building would limit personnel access and eventually lead to an unmonitored ground level release. Operation of the turbine building ventilation system: helps preserves turbine building accessibility, AND assures that radioactivity in turbine building areas is discharged through a monitored release point. (Discharged to the reactor building stack).

K/A JUSTIFICATION:

This question satisfies the K/A statement by requiring the applicant to know where the Turbine Building exhaust release point is occurring and the reason why restarting the ventilation is required.

The "A" distractor is plausible since the first part is correct. The second part is plausible if the applicant remembers that SBGT system discharges to the Main Stack and since the Turbine Building Ventilation will be processing the TB atmosphere, that it will discharge to the Main Stack as well.

The "C" distractor is plausible if the applicant thinks that since there is equipment that may be operated in the Turbine Building then equipment operability is the reason. The second part is plausible if the applicant remembers that SBGT system discharges to the Main Stack and since the Turbine Building Ventilation will be processing the TB atmosphere, that it will discharge to the Main Stack as well.

The "D" distractor is plausible if the applicant thinks that since there is equipment that may be operated in the Turbine Building then equipment operability is the reason. The second part is plausible since it is correct.

A. **Incorrect** - See description above.

B. **Correct** - See description above.

C. **Incorrect** - See description above.

D. **Incorrect** - See description above.

References:
NONE

K/A:

2.3 Radiation Control

G2.3.11 Ability to control radiation releases.
(CFR: 41.11 / 43.4 / 45.10) 3.8 4.3

LESSON PLAN/OBJECTIVE:

EOP-SCRR-LP-20325, Secondary Containment / Radioactivity Release Control, **Ver 2.1**, EO 201.082.A.01

Reference(s) used to develop this question:

31EO-EOP-014-2, Secondary Containment Control - Radioactivity Release Control, **Ver 11**

Bank question used on 2011 NRC Exam Q#70

71. G2.3.13 001/30008ADMRAD/M30008.003/BANK/P-NORM/BOTH/G2.3.13/3/F/3/ARB/ELJ

Two NPOs are required to enter a "Locked High Radiation" area room to perform a tagout. The NPOs will be accompanied by a Radiation Protection (RP) Technician (Tech).

IAW 62RP-RAD-016-0, Control Of High Radiation Areas, which ONE of the choices below completes the following statements?

The keys to the "Locked High Radiation" area room can be issued from _____ .

After exiting the Locked High Radiation Area, the door can be verified secure by _____ .

A. ✔ the RP Office ONLY
one of the NPOs

B. the RP Office ONLY
the RP Tech ONLY

C. either the the RP Office OR the Work Control Center;
one of the NPOs

D. either the the RP Office OR the Work Control Center;
the RP Tech ONLY

Description:

62RP-RAD-016-0, Step 5.2.3.3 & 5.2.3.4 states that for Very High Radiation Area and Locked High Radiation Area keys, the keys will ONLY be issued to RP technicians. Upon exiting Locked High Radiation Area doors, concurrent verification is required assuring that the door/padlock is secured AND locked. This will be performed by the RP technician holding the key and a second worker that will act as the verifier. For entry in to Very High Radiation Areas, RP personnel only will verify that the door used during the entry is secured, AND locked.

K/A JUSTIFICATION:

This question satisfies the K/A statement by requiring the applicant to understand the radiological procedures for access into locked high radiation areas and the requirements for key control and door verification.

The "B" distractor is plausible since the first part is correct. The second is plausible if the applicant thinks about the requirements for a Very High Radiation Area door and thinks these are the requirements for a Locked High Radiation area. Very High requires RP personnel to verify the door.

The "C" distractor is plausible if the applicant thinks that since the Work Control Center provides the work package for performing work that you could check out the high radiation door key to perform work in High radiation areas as well. The second part is plausible since it is correct.

The "D" distractor is plausible if the applicant thinks that since the Work Control Center provides the work package for performing work that you could check out the high radiation door key to perform work in High radiation areas as well. The second is plausible if the applicant thinks about the requirements for a Very High Radiation Area door and thinks these are the requirements for a Locked High Radiation area. Very High requires RP personnel to verify the door.

A. **Correct** - See description above.

B. **Incorrect** - See description above.

C. **Incorrect** - See description above.

D. **Incorrect** - See description above.

References:
NONE

K/A:

2.3 Radiation Control

G2.3.13 Knowledge of radiological safety procedures pertaining to licensed operator duties, such as response to radiation monitor alarms, containment entry requirements, fuel handling responsibilities, access to locked high-radiation areas, aligning filters, etc. (CFR: 41.12 / 43.4 / 45.9 / 45.10) 3.4 3.8

LESSON PLAN/OBJECTIVE:

LT-LP-30008, Radiation Control Adminstration Procedures And Instrumentation, LO LT-30008.003

Reference(s) used to develop this question:

62RP-RAD-016-0, Control Of High Radiation Areas, **Ver. 33.0**

Bank question from HLT Database Q#G2.3.13-001 used on Hatch 2011-301 NRC Exam Q#72

72. G2.3.14 001/30004ADMIN/LT-30008.002/BANK/P-NORM/BOTH/G2.3.14/3/F/2/JSC/ELJ

Unit 1 is operating at 100% RTP.

34SV-E51-002-1, RCIC Pump Operability, will be performed within the next hour.

IAW 34SV-E51-002-1, the _____ (RCIC) diagonal will be posted as a _____ during the RCIC run.

A. Southwest;
Radiation Area ONLY

B.✔ Southwest;
High Radiation Area

C. Northwest;
Radiation Area ONLY

D. Northwest;
High Radiation Area

Description:

IAW 34SV-E51-002-1, step 5.1.8 states "The number of personnel in the RCIC Room And Torus Area will be limited during testing due to **High Radiation Areas** AND the potential for a high energy line break in these rooms." Step 6.1 states "At least one hour PRIOR to running this equipment, notify Health Physics to post the necessary locations as **High Radiation Areas**."

A High Radiation Area is an area with radiation dose rates >100 mr/hr.

Unit 1 RCIC is located in the Southwest diagonal while Unit 2 RCIC is located in the Northwest diagonal.

K/A JUSTIFICATION:

This question satisfies the K/A statement by requiring the applicant to know the effects that running RCIC will have on the radiation levels in the RCIC diagonal and the required posting requirements.

The "A" distractor is plausible since the first part is correct. The second part is plausible if the applicant remembers that this area is already a Radiation Area without RCIC in operation.

The "C" distractor is plausible if the applicant thinks about the Unit 2 location vice the Unit 1 location. This would be correct if asking for Unit 2. The second part is plausible if the applicant remembers that this area is already a Radiation Area without RCIC in operation.

The "D" distractor is plausible if the applicant thinks about the Unit 2 location vice the Unit 1 location. This would be correct if asking for Unit 2. The second part is plausible since it is correct.

A. **Incorrect** - See description above.

B. **Correct** - See description above.

C. **Incorrect** - See description above.

D. **Incorrect** - See description above.

References:
NONE

K/A:

2.3 Radiation Control

G2.3.14 Knowledge of radiation or contamination hazards that may arise during normal, abnormal, or emergency conditions or activities.
(CFR: 41.12 / 43.4 / 45.10) 3.4 3.8

LESSON PLAN/OBJECTIVE:

LT-LP-30008, Radiation Control Administrative Procedures and Instrumentation, EO LT-30008.002

References used to develop this question:

34SV-E51-002-1, RCIC Pump Operability, **Ver 26.1**

Original Question-question HLT bank #G2.3.14 003

73. G2.4.21 001/00701RHR/006.005.A.02/MOD/SYS-I/BOTH/G2.4.21/3/H/3/ARB/ELJ

Unit 2 is in a forced outage with RHR Loop "B" in Shutdown Cooling Mode.

- o RPV pressure is 115 psig

Subsequently, a leak occurs in the Drywell resulting in Drywell pressure increasing to 1.9 psig.

Based on the above conditions and with NO operator actions,

RHR Loop "B" _____ REMAIN in the Shutdown Cooling Mode.

HPCI _____ AUTOMATICALLY start and inject into the RPV.

A. will;
will

B. will;
will NOT

C. will NOT;
will

D.✓ will NOT;
will NOT

Description:

Phil, this was question 5 of 10 of the previously submitted questions. Changes were incorporated based on your ES-401-9 comments.

2E11-F015A/B will automatically close if a PCIS Group 2 signal is received (3 inches RWL or 1.85 psig Drywell pressure) while in the SDC mode.

HPCI will receive an isolation signal due to low steam supply pressure at 134 psig.

K/A JUSTIFICATION:

This question satisfies the K/A statement by requiring the applicant to understand the status of the RHR Systems during SDC (core cooling & heat removal) operation along with Torus Cooling (containment condition) operation and then addessing the safety status, i.e. still in service providing function or isolated and not providing function.

The "A" distractor is plausible if the applicant thinks about the SDC valves F008/F009 will only close on low RWL at 3 inches or high RPV pressure at 138 psig and thinks SDC will remain in service based on the fact that neither one of these conditions are met. F015A/B acts as a Group 2 valve only when F008 and F009 are open. Therefore the normal operation of the F015A/B would receive an open signal on the receipt of a LOCA signal. The second part is plausible if the applicant thinks about the setpoint for RCIC isolating on Low RPV pressure at 95 psig and thinks this is the HPCI setpoint.

The "B" distractor is plausible if the applicant thinks about the SDC valves F008/F009 will only close on low RWL at 3 inches or high RPV pressure at 138 psig and thinks SDC will remain in service based on the fact that neither one of these conditions are met. F015A/B acts as a Group 2 valve only when F008 and F009 are open. Therefore the normal operation of the F015A/B would receive an open signal on the receipt of a LOCA signal. The second part is plausible since it is correct.

The "C" distractor is plausible since the first part is correct. The second part is plausible if the applicant thinks about the setpoint for RCIC isolating on Low RPV pressure at 95 psig and thinks this is the HPCI setpoint.

A. **Incorrect** - See description above.

B. **Incorrect** - See description above.

C. **Incorrect** - See description above.

D. **Correct** - See description above.

References:
NONE

K/A:

2.4 Emergency Procedures / Plan

G2.4.21 Knowledge of the parameters and logic used to assess the status of safety functions, such as reactivity control, core cooling and heat removal, reactor coolant system integrity, containment conditions, radioactivity release control, etc.
(CFR: 41.7 / 43.5 / 45.12) 4.0 4.6

LESSON PLAN/OBJECTIVE:

E11-RHR-LP-00701, Residual Heat Removal System, **Ver. 9.1**, EO 006.005.A.02

Reference(s) used to develop this question:

34SO-E11-010-2, Residual Heat Removal System, **Ver. 40.4**
34SO-E41-001-2, High Pressure Coolant Injection (HPCI) System, **Ver 28.3**
34SO-E51-001-2, Reactor Core Isolation Cooling (RCIC) System, **Ver 25.1**

Modified from HLT Database Q#205000G2.4.21-001

Original Question

Unit 2 is in a forced outage with the following conditions:

At 11:00

- o RHR Loop "A" in Torus Cooling mode
- o RHR Loop "B" in Shutdown Cooling (SDC) mode

- o Reactor pressure 20 psig LOWERING at 2 psig/minute due to RHR SDC
- o Torus temperature 98°F LOWERING at 0.3°F/minute

At 11:05 RPS MG set 2A trips

Which ONE of the following completes both statements? (Assume NO Operator action)

RHR _____ will REMAIN in its' current lineup.

At 11:20 a Tech Spec Mode change _____ have occurred.

A.✓ Loop A;
will NOT

B. Loop A;
will

C. Loop B;
will NOT

D. Loop B;
will

74. G2.4.32 001/21401EP/H-EP-001.042.A.05/MOD/P-EP/BOTH/G2.4.32/3/H/2/JSC/ELJ

Unit 2 was operating at 100% RTP when a loss of electrical power results in a loss of a significant number of Main Control Room annunciators (P603, P602 & P601) with a Reactor scram.

- o An Alert Emergency classification is declared

IAW NMP-EP-111-002, Emergency Notification Network Communicator Instructions - Hatch,

The LATEST time that the INITIAL Plant Page Announcement can be made is _____ .

Without additional direction from the Emergency Director, the operator _____ REQUIRED to repeat the Plant Page Announcement for the next two (2) hours.

A. ✓ 14 minutes; is

B. 14 minutes; is NOT

C. 29 minutes; is

D. 29 minutes; is NOT

Description:

The loss of annunciators concurrent with a significant transient (scram) is an Alert emergency based on SA4.

SA4 - UNPLANNED Loss of Most or All Safety System Annunciation or Indication in Control Room With **EITHER** (1) a SIGNIFICANT TRANSIENT in Progress, **OR** (2) Compensatory Non-Alarming Indicators are Unavailable. (Pg. 56)

1. UNPLANNED loss of most or all (approximately 75% of annunciators on panels 601, 602, & 603) MCR annunciators or indicators associated with safety systems for greater than 15 minutes
   AND EITHER
   a. A SIGNIFICANT TRANSIENT is in progress
   OR
   b. Compensatory non-alarming indications are **NOT** available

Once an Alert emergency is declared, the following events have to occur:

IAW NMP-EP-111-002, section III, INSTRUCTIONS & STANDARD ANNOUNCEMENT FOR ALERT EMERGENCY:states "The appropriate emergency tone and announcement must

be made as soon as possible, but not to exceed 15 minutes after the initial emergency declaration"

IAW NMP-EP-111-F12, 6.0 b. states "After the first two (2) hours, repeat the announcement as directed by the ED, SM, or SS and track time of announcement.

K/A JUSTIFICATION:

This question satisfies the K/A statement by requiring the applicant to know the announcement requirements for the emergency associated with a loss of annunciators.

The "B" distractor is plausible since the first part is correct. The second part is plausible if the applicant thinks that they need direction from the Emergency Director as required if the emergency lasts longer than 2 hours. NMP-EP-111-F12 states "After the first two (2) hours, repeat the announcement as directed by the ED, SM, or SS and track time of announcement." The operator does not need further direction to repeat the announcement for the first two hours IAW NMP-EP-111-F12.

The "C" distractor is plausible if the applicant thinks about the followup announcement time requirement of repeating the announcement every 30 minutes instead of the required 15 minute limit. The second part is plausible since it is correct.

The "D" distractor is plausible if the applicant thinks about the followup announcement time requirement of repeating the announcement every 30 minutes instead of the required 15 minute limit. The second part is plausible if the applicant thinks that they need direction from the Emergency Director as required if the emergency lasts longer than 2 hours. NMP-EP-111-F12 states "After the first two (2) hours, repeat the announcement as directed by the ED, SM, or SS and track time of announcement." The operator does not need further direction to repeat the announcement for the first two hours IAW NMP-EP-111-F12.

A. **Correct** - See description above.

B. **Incorrect** - See description above.

C. **Incorrect** - See description above.

D. **Incorrect** - See description above.

References:
NONE

K/A:

2.4 Emergency Procedures / Plan

G2.4.32 Knowledge of operator response to loss of all annunciators.

LESSON PLAN/OBJECTIVE:

EP-SS-LP-21401, Operations Fundamentals, **Ver 4.0**, EO H-EP-001.042.A.05

References used to develop this question:

NMP-EP-111-F12, Emergency Page Announcement Instructions, **Ver 1.0**
NMP-EP-111-002, Emergency Notification Network Communicator Instructions-Hatch, **Ver 1.0**

Original Question-HLT 7 NRC exam q#75

Unit 2 was operating at 100% RTP when a loss of electrical power results in a loss of a significant number of Main Control Room annuciators and a reactor scram.

An ALERT Emergency classification is declared.

Which ONE of the choices below completes the following statement?

The LATEST time from the ALERT declaration that the INITIAL Plant Page Announcement can be made and still meet the requirements of NMP-EP-111-002, Emergency Notification Network Communicator Instructions - Hatch, is _____ .

Without additional direction from the Emergency Director, the operator is REQUIRED to make _____ .

A.✓ 15 minutes;
the INITIAL Plant Page Announcement, followed by a repeat Plant Page Announcement approximately 30 minutes later

B. 15 minutes;
ONLY the Initial Plant Page Announcement

C. 30 minutes;
the INITIAL Plant Page Announcement, followed by a repeat Plant Page Announcement approximately 30 minutes later

D. 30 minutes;
ONLY the Initial Plant Page Announcement

75. G2.4.49 001/01501MSRFW/200.050.B.02/MOD/P-AB/BOTH/G2.4.49/3/F/3/ARB/ELJ

Unit 2 is at 100% RTP when a loss of Feedwater Heating event occurs.

IAW 34AB-N21-001-2, Loss Of Feedwater Heating,

The Immediate Operator Action is to depress the _____ and reactor power will INITIALLY be reduced and maintained _____ below the steady state power level prior to the feedwater temperature reduction.

A. Individual Recirc Flow Control LOWER FAST pushbuttons; 3% to 5%

B. Individual Recirc Flow Control LOWER FAST pushbuttons; >20%

C.✔ Master Recirc Flow Control LOWER FAST pushbutton; 3% to 5%

D. Master Recirc Flow Control LOWER FAST pushbutton; >20%

Description:

IAW 34AB-N21-001-2 step 3.1 states "Maintain Reactor power BELOW the **steady state power level prior to the feedwater temperature reduction**, via recirc, using the **Master Recirc Flow Control LOWER FAST pushbutton**, per 34SO-B31-001-2 AND 34GO-OPS-005-2."

K/A JUSTIFICATION:

This question satisfies the K/A statement by requiring the applicant to know (without reference) the Immediate operator action for a loss of Feedwater Heating which is to lower reactor power using the appropriate controls (Master Recirc Flow Control LOWER FAST) to a specified value (the steady state power level prior to the feedwater temperature reduction).

The "A" distractor is plausible since the Individual Recirc Flow Control LOWER FAST pushbuttons will reduce recirc speeds but are not required to be used IAW 34SO-N21-001-2. The second part is plausible since it is correct.

The "B" distractor is plausible since the Individual Recirc Flow Control LOWER FAST pushbuttons will reduce recirc speeds but are not required to be used IAW 34SO-N21-001-2. The second part is plausible if the applicant remembers the subsequent actions of reducing more than 20% pre-event power level which 65% RTP would meet.

The "D" distractor is plausible since the first part is correct. The second part is plausible if the applicant remembers the subsequent actions of reducing more than 20% pre-event power level which 65% RTP would meet.

A. **Incorrect** - See description above.

B. **Incorrect** - See description above.

C. **Correct** - See description above.

D. **Incorrect** - See description above.

References:
NONE

K/A:

2.4 Emergency Procedures / Plan

2.4.49 Ability to perform without reference to procedures those actions that require immediate operation of system components and controls.
(CFR: 41.10 / 43.2 / 45.6) 4.6 4.4

LESSON PLAN/OBJECTIVE:

N22-MSRFW-LP-01501, Moisture Separator Reheaters And Feedwater Heaters, **Ver. 5.2**
EO 200.050.B.02

Reference(s) used to develop this question:

34AB-N21-001-2, Loss Of Feedwater Heating, **Ver. 7.9**
34GO-OPS-005-2, Power Changes, **Ver. 28.3**

Modified from HLT Database Q#295014G2.1.25-001 & Q#NRC2009302-075
Q#NRC2009302-075 was used on 2009 Hatch NRC Exam Q#75

Original Question Q#295014G2.1.25-001

Unit 2 is at 100% power when a loss of feedwater heating event occurs.

Which ONE of the following completes the following statement IAW 34AB-N21-001-2, "Loss Of Feedwater Heating" Section 3.0 Immediate Operator Actions?

Maintain Reactor power BELOW _____ using _____ .

A. 65%;
recirc

B. 65%;
control rods

C.✓ the steady state power level prior to the feedwater temperature reduction;
recirc

D. the steady state power level prior to the feedwater temperature reduction;
control rods

Original Question Q#NRC2009302-075

Unit 2 is at 100% RTP when a loss of feedwater heating event occurs.

- o Reactor power is reduced IAW 34AB-N21-001-2, "Loss Of Feedwater Heating".
- o Reactor power is STABLE at 75% RTP.

Which ONE of the choices below completes the following statements?

IAW 34AB-N21-001-2, the OATC was INITIALLY directed to depress the _____ to

lower reactor power.

IAW 34GO-OPS-005-2, Power Changes, the HIGHEST listed Final Feedwater Temperature at 75% RTP which would REQUIRE the Final Feedwater Temperature Reduction Cumulative Usage to be tracked is _____ .

Reference Provided

A. Master Recirc Flow Control LOWER FAST pushbutton; 390°F

B.✓ Master Recirc Flow Control LOWER FAST pushbutton; 380°F

C. Individual Recirc Flow Control LOWER FAST pushbuttons; 390°F

D. Individual Recirc Flow Control LOWER FAST pushbuttons; 380°F

76. 202001A2.26 001/00401B31/004.002.A.02/NEW/P-NORM/SRO ONLY/202001A2.26/2/2/H/3/JSC/ELJ

Unit 2 is recovering from a transient due to the trip of both Recirc Pumps.

34SO-B31-001-2, Reactor Recirculation System, Recirc Pump Quick Restart, is in progress.

At 10:00, the following conditions exist:

- o RPV saturation temperature 530°F and steady
- o "A" Recirc suction temperature 510°F lowering 1°F/minute
- o "B" Recirc suction temperature 505°F lowering 1°F/minute
- o Vessel Bottom Head Drain temperature 425°F lowering 2°F/minute
- o An operator depresses the ASD A START pushbutton

Two (2) minutes after the ASD A START pushbutton was depressed, 2B31-F031A, Recirc Pump A Discharge Valve, red AND green indicating lights are BOTH illuminated.

Based on the above conditions,

IAW TS 3.4.9 RCS Pressure and Temperature (P/T) Limits, the LATEST listed time the crew could have started Recirc pump 2A and still meet TS 3.4.9 temperature requirements is NO LATER THAN _____ .

Three (3) minutes after the ASD A START pushbutton was depressed, Recirc Pump 2A will be _____ .

A. ✓ 10:20;
tripped

B. 10:20;
running at minimum speed

C. 10:30;
tripped

D. 10:30;
running at minimum speed

Description:

The jog circuit for the Recirc discharge valve is designed to ensure a slow steady increase in core flow on a Recirc Pump start. Two seconds after the ASD starts, the Discharge Valve Jog Circuit is energized and the valve receives an open signal for three seconds. <u>If the valve does not come free of its closed seat within this period, the ASD Trips</u>. After 96 seconds the Aux Timer resets the Main Timer.
After a ten-second time delay, the valve receives four one second open signals separated by 10-second time delays. Following a final ten second time delay, the valve receives a sealed in

open signal until one of three things happen:
-The valve opens fully (normally takes about 34 seconds).
-The valve stops at a point not fully open, but greater than 90% open, in which the Auxiliary timer will reset the main timer after a total of 96 seconds.
-The valve stops less than 90% open in which the Aux Timer will reset the Main Timer and Trip the ASD thus stopping the Recirc Pump.

SR 3.4.9.3 Verify the difference between the bottom head coolant temperature and the RPV coolant temperature is ≤ 145°F.
SR 3.4.9.4 Verify the difference between the reactor coolant temperature in the recirculation loop to be started and the RPV coolant temperature is ≤ 50°F.
Based on the 34SO-B31-001-2 procedure and TS, The 2A Recirc pump can be restarted no later than 10:20 based on the rate of cooldown of Vessel Bottom Head Drain temperature. This 20 minute period will place the differential temperature between the 2A Recirc loop and the Vessel Bottom Head Drain temperature at the limit of 145°F. The other two differential temperatures points would be as follows: 5°F for the loop to loop and 40°F for the loop to RPV Saturation.

SRO JUSTIFICATION:

The SRO must have detailed administrative procedure knowledge of 34SO-B31-001-2 in regards to starting Recirc pumps due to the Tech spec implications. The SRO must be able to choice the latest time the Recirc pump can be restarted and meet the TS SR 3.4.9.3 and 3.4.9.4 requirements.

K/A JUSTIFICATION:

This question satisfies the K/A statement by requiring the applicant to know the Recirc restart prerequisites and they are not satisified (incomplete start). The SRO must then know which procedure to enter as a result.

The "B" distractor is plausible since the first part is correct. The second part is plausible if the applicant remembers that the ASD will trip if it does not come off its close seat within 3 seconds after the ASD START pushbutton is depressed. By the indications given, the discharge valve did come off its closed seat therefore the applicant will think that the pump should be running at minimum speed. The second part is also plausible if the applicant remembers that the ASD will trip if the valve is 90% full open and thinks that the valve satisfies this requirement by being >90% but <100%.

The "C" distractor is plausible if the operator remembers the 50°F differential requirement between the Recirc loop and the RPV Saturation temperature. It will take 30 minutes (10:30) to reach this differential limit. The first part is also plausible if the applicant remembers that there is a 30 minute requirement to start the Recirc pump but this is only if the applicant can not get Vessel Bottom Head Drain temperature directly. The second part is plausible since it is correct.

The "D" distractor is plausible if the operator remembers the 50°F differential requirement between the Recirc loop and the RPV Saturation temperature. It will take 30 minutes (10:30) to reach this differential limit. The first part is also plausible if the applicant remembers that there is a 30 minute requirement to start the Recirc pump but this is only if the applicant can not get Vessel Bottom Head Drain temperature directly. The second part is plausible if the applicant remembers that the ASD will trip if it does not come off its close seat within 3 seconds after the

ASD START pushbutton is depressed. By the indications given, the discharge valve did come off its closed seat therefore the applicant will think that the pump should be running at minimum speed. The second part is also plausible if the applicant remembers that the ASD will trip if the valve is 90% full open and thinks that the valve satisfies this requirement by being >90% but <100%.

A. **Correct** - See description above.

B. **Incorrect** - See description above.

C. **Incorrect** - See description above.

D. **Incorrect** - See description above.

References:
NONE

K/A:

202001 Recirculation System

A2. Ability to (a) predict the impacts of the following on the RECIRCULATION SYSTEM; and (b) based on those predictions, use procedures to correct, control, or mitigate the consequences of those abnormal conditions or operations: (CFR: 41.5 / 45.6)

A2.26 Incomplete start sequence: Plant-Specific 2.9 3.1

SRO only because of link to 10CFR55.43 (b)(2):Facility operating limitations in the TS and their bases. Application of Required Actions (Section 3) and Surveillance Requirements (SR) (Section 4) in accordance with rules of application requirements (Section 1)

LESSON PLAN/OBJECTIVE:

B31-RRS-LP-00401, Reactor Recirculation System, **Ver 10.5**, EO 004.002.A.02

References used to develop this question:

SRO ONLY Guideline
34SO-B31-001-2, Reactor Recirculation System, **Ver 44.6**

Clarification Guidance for SRO-only Questions
Rev 1 (03/11/2010) Q#76 K/A 202001A2.26

II. Some examples of additional knowledge and abilities as they pertain to an SRO license and the 10 CFR 55.43(b) topics [ES-401, Section D.1.c]:

A. Conditions and limitations in the facility license. [10 CFR 55.43(b)(1)]

Some examples of SRO exam items for this topic include:

- Reporting requirements when the maximum licensed thermal power output is exceeded.
- Administration of fire protection program requirements such as compensatory actions associated with inoperable sprinkler systems, fire doors, etc.
- The required actions for not meeting administrative controls listed in Technical Specification (TS) Section 5 or 6, depending on the facility (e.g., shift staffing requirements).
- National Pollutant Discharge Elimination System (NPDES) requirements, if applicable.
- Processes for TS and FSAR changes.

Note: The analysis and selection of required actions for TS Sections 3 and 4 may be more appropriately listed in the following 10 CFR 55.43 topic.

B. Facility operating limitations in the TS and their bases. [10 CFR 55.43(b)(2)]

Some examples of SRO exam items for this topic include:

- Application of Required Actions (Section 3) and Surveillance Requirements (SR) (Section 4) in accordance with rules of application requirements (Section 1).
- Application of generic Limiting Condition for Operation (LCO) requirements (LCO 3.0.1 thru 3.0.7; SR 4.0.1 thru 4.0.4).
- Knowledge of TS bases that are required to analyze TS required actions and terminology.
- Same items listed above for the Technical Requirements Manual (TRM) and Offsite Dose Calculation Manual (ODCM).

SRO-only knowledge generally cannot be claimed for questions that can be answered *solely* based on knowledge of ≤ 1 hour action statements and the safety limits since Reactor Operators (ROs) are typically required to know these items.

SRO-only knowledge generally cannot be claimed for questions that can be answered *solely* based on expected RO TS knowledge. RO's are typically expected to know the LCO statements and associated applicability information, i.e., the information above the double line separating the

Clarification Guidance for SRO-only Questions
Rev 1 (03/11/2010) Q#76 K/A 202001A2.26

Figure 1: Screening for SRO-only linked to 10 CFR 55.43(b)(2) (Tech Specs)

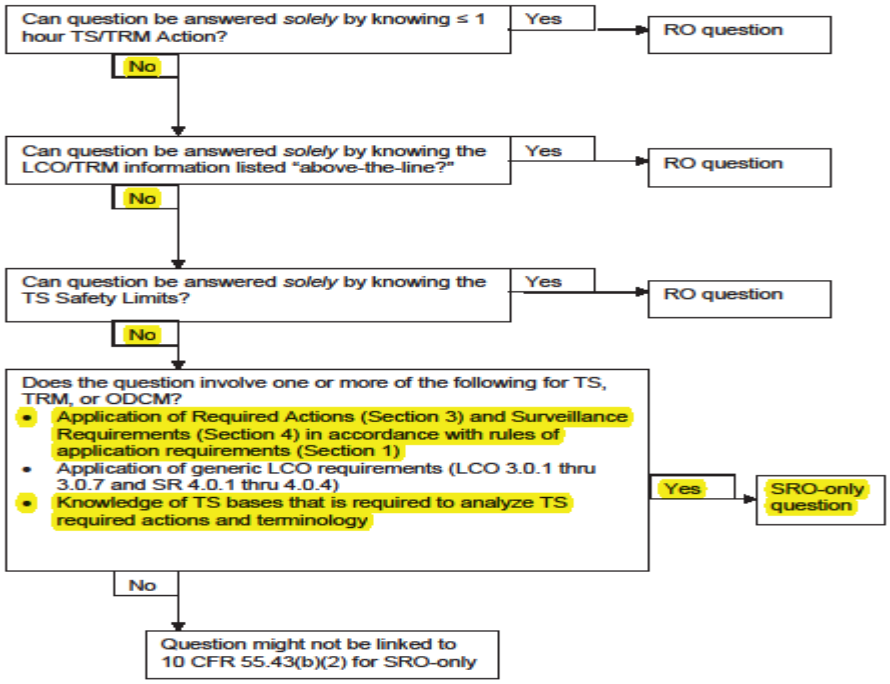

Page 5 of 16

77. 205000A2.07 001/00701E11/400.067.A.27/MOD/TECH SPECS/SRO ONLY/205000A2.07/2/1/H/3/ARB/ELJ

Unit 1 is in Mode 3 following a shutdown 18 hours earlier for refueling with the following plant conditions:

- o RPV Level is 40 inches and steady
- o BOTH Recirc ASDs are Danger tagged for maintenance
- o RHR pump 1A is Danger tagged due to motor ground
- o RHR pump 1B is Danger tagged for breaker failure
- o RHR Loop B is in Shutdown Cooling

RHRSW PUMPS BRG TEMP HIGH, 650-430, alarm is received. Investigation reveals cooling water to RHRSW pump 1B motor has been lost and CANNOT be restored.

RHRSW pump 1B is shutdown and RHRSW pump 1D is started.

With the above conditions,

After RHRSW pump 1D is started and IAW TS LCO 3.4.7, Residual Heat Removal (RHR) Shutdown Cooling System - Hot Shutdown, the REQUIRED number of OPERABLE RHR Shutdown Cooling Subsystems _____ met.

IAW 31GO-OPS-006-0, Conditions, Required Actions, And Completion Times, when Unit 1 enters Mode 4, the Required Action Sheet (RAS) for RHRSW pump 1B _____ .

A. is;
MUST remain active

B. is;
CAN be replaced with a Tracking RAS

C. is NOT;
MUST remain active

D✓ is NOT;
CAN be replaced with a Tracking RAS

Description:

Phil, this was question 6 of 10 of the previously submitted questions. Changes were incorporated based on your ES-401-9 comments.

Alarm RHRSW PUMPS BRG TEMP HIGH, 650-430, requires the RHRSW pump to be shutdown when the following temperatures are exceeded:

	GE	Reliance
Thrust Bearing	212°F	222°F
Upper Guide Bearing	212°F	222°F
Lower Guide Bearing	220°F	205°F

With the loss of cooling water the RHRSW pumps will be securred.

IAW TS B3.4.7 Residual Heat Removal (RHR) Shutdown Cooling System - Hot Shutdown, Two RHR shutdown cooling subsystems are required to be OPERABLE, and when no recirculation pump is in operation, one shutdown cooling subsystem must be in operation. An OPERABLE RHR shutdown cooling subsystem consists of one OPERABLE RHR pump and the associated heat exchanger, piping and valves which can provide the capability to reduce and maintain the reactor coolant temperature to < 212°F. Additionally, it should be noted that the Residual Heat Removal Service Water (RHRSW) System is a support system for the RHR shutdown cooling function.
Two OPERABLE RHRSW system pumps are required **per heat exchanger** to transfer the heat necessary to reduce and maintain reactor coolant temperature to < 212°F. OPERABILITY requirements for the RHRSW System in Mode 3 are addressed by LCO 3.7.1, "Residual Heat Removal Service Water (RHRSW) System."
The two required RHR shutdown cooling subsystems have a common suction source and are allowed to have a common heat exchanger and common discharge piping. Since the piping and heat exchangers are passive components that are assumed not to fail, they are allowed to be common to both required subsystems. Thus, to meet the LCO, <u>both RHR pumps in one loop</u> or **one RHR pump in each of the two loops must be OPERABLE**.
If the two required subsystems consist of an RHR pump in each loop, both heat exchangers, **each with two OPERABLE RHRSW System pumps** supplying cooling water, are required since one heat exchanger will not be common to both subsystems. Each shutdown cooling subsystem is considered OPERABLE if it can be manually aligned (remote or local) in the shutdown cooling mode for removal of decay heat. In MODE 3, the RHR cross tie valve (1E11-F010) may not be opened (per LCO 3.5.1) to allow pumps in one loop to discharge through the opposite recirculation loop.

IAW TS B3.4.8, Residual Heat Removal (RHR) Shutdown Cooling System - Cold Shutdown, Two RHR shutdown cooling subsystems are required to be OPERABLE, and when no recirculation pump is in operation, one RHR shutdown cooling subsystem must be in operation. An OPERABLE RHR shutdown cooling subsystem consists of one OPERABLE RHR pump and the associated heat exchanger, one RHRSW pump providing cooling to the heat exchanger, and the associated piping and valves which can provide the capability to maintain the reactor coolant temperature < 212°F. The two required RHR shutdown cooling subsystems have a common suction source and are allowed to have a common heat exchanger and common discharge piping. Since the piping and heat exchangers are passive components that are assumed not to fail, they are allowed to be common to both required subsystems. Thus, to meet the LCO, both RHR pumps in one loop or one RHR pump in each of the two loops must be OPERABLE. If the two required subsystems consist of an RHR pump in each loop, both heat exchangers are required since one heat exchanger will not be common to both subsystems. In MODE 4, the RHR cross tie valve (1E11-F010) may be opened (per LCO 3.5.2) to allow pumps in one loop to discharge through the opposite recirculation loop to make a complete subsystem.

Similarly, to meet the LCO, the cooling supply for the heat exchanger(s) requires two RHRSW pumps (either one pump in each RHRSW loop or two pumps in one RHRSW loop). With one RHR heat exchanger common to both RHR shutdown cooling subsystems, each RHRSW pump is required to be capable of providing cooling to that heat exchanger (**Note: the RHRSW cross tie valves may be open to allow the RHRSW pump(s) in one loop to provide cooling to a heat exchanger in the opposite loop to make a complete subsystem**), or with both heat exchangers required, each heat exchanger is required to have an RHRSW pump capable of providing coolant to that heat exchanger.

In this case, even though the RHR Shutdown Cooling subsystem remains circulating reactor coolant, without the cooling water to the heat exchanger, the subsystem is still inop.

IAW TS B3.7.1 Residual Heat Removal Service Water (RHRSW) System, Two RHRSW subsystems are required to be OPERABLE to provide the required redundancy to ensure that the system functions to remove post accident heat loads, assuming the worst case single active failure occurs coincident with the loss of offsite power.

An RHRSW subsystem is considered OPERABLE when:

a. Two pumps are OPERABLE;
b. An OPERABLE flow path is capable of taking suction from the intake structure and transferring the water to the RHR heat exchangers at the assumed flow rate. Additionally, the **RHRSW crosstie valves (which allow the two RHRSW loops to be connected) must be closed** so that failure of one subsystem will not affect the OPERABILITY of the other subsystems.

SRO JUSTIFICATION:

The SRO must have detailed knowledge of TS Bases concerning TS 3.4.7 & TS 3.4.8 to answer this question and must properly apply 31GO-OPS-006 and TS 3.0.2 to answer this question. Even though the RO may know that two RHR Shutdown Cooling subsystems must be operable, what constitues a subsystem and the 31GO-OPS-006 requirements is above the RO knowledge level.

K/A JUSTIFICATION:

This question satisfies the K/A statement by requiring the applicant to understand that a loss of motor cooling to RHRSW pump 1B motor results in the pump being secured. Securing RHRSW pump due to loss of motor cooling and then starting the other RHRSW pump, allows the applicant to determine (predict) whether or not a RHR Shutdown Cooling subsystem is inoperable and IAW TS Bases, if an alternate method of decay heat removal is required to be verified available. Based on the loss of motor cooling and subsequent pump secured, the applicant will determine whether or not the RHRSW System still meets the requirements of TS Bases 3.4.7 & 3.4.8 for an operable RHRSW Subsystem.

The "A" distractor is plausible if the applicant remembers LCO 3.4.8 subsystem requirements which defines an operable subsystem exists when one RHR pump has one RHRSW pump available and thinks since both Loop A and Loop B meet this condition that the LCO requirement for two operable subsystems is met. The second part is plausible if the applicant does not apply 31GO-OPS-006-0 or does not apply LCO 3.0.2 properly. Also if the applicant does not recognize the LCO is no longer applicable in Mode 4.

The "B" distractor is plausible if the applicant remembers LCO 3.4.8 subsystem requirements which defines an operable subsystem exists when one RHR pump has one RHRSW pump available and thinks since both Loop A and Loop B meet this condition that the LCO requirement for two operable subsystems is met. The second part is plausible since it is correct.

The "C" distractor is plausible since the first part is correct. The second part is plausible if the applicant does not apply 31GO-OPS-006-0 or does not apply LCO 3.0.2 properly. Also if the

applicant does not recognize the LCO is no longer applicable in Mode 4.

A. **Incorrect** - See description above.

B. **Incorrect** - See description above.

C. **Incorrect** - See description above.

D. **Correct** - See description above.

References:
NONE

K/A:

205000 Shutdown Cooling System (RHR Shutdown Cooling Mode)

A2. Ability to (a) predict the impacts of the following on the SHUTDOWN COOLING SYSTEM (RHR SHUTDOWN COOLING MODE) ; and (b) based on those predictions, use procedures to correct, control, or mitigate the consequences of those abnormal conditions or operations: (CFR: 41.5 / 45.6)

A2.07 Loss of motor cooling: Plant-Specific 2.7 2.7

SRO only because of link to 10CFR55.43(b)(2): Facility operating limitations in the technical specifications and their bases.

LESSON PLAN/OBJECTIVE:

E11-RHR-LP-00701, Residual Heat Removal System, **Ver. 9.1**, EO 400.067.A.27

Reference(s) used to develop this question:

SRO ONLY Guideline (See below)
U1 TS 3.4.7 RHR Shutdown Cooling System - Hot Shutdown, **Amendment 266**
U1 TS Bases 3.4.7 RHR Shutdown Cooling System - Hot Shutdown, **Revision 15**
U1 TS 3.4.8 RHR Shutdown Cooling System - Cold, **Amendment 266**
U1 TS Bases 3.4.8 RHR Shutdown Cooling System - Cold Shutdown, **Revision 1**
31GO-OPS-006-0, Conditions, Required Actions, And Completion Times, **Ver. 8.2**
34AB-E11-001-1, Loss of Shutdown Cooling, **Ver. 3.14**
34AR-650-430-1, RHRSW Pumps Brg Temp High, **Ver. 1.5**

Browns Ferry 2008 NRC Written Exam Q#89
Modified from HLT Database Q#205000A2.05-001

Original Question

Given the following plant conditions:

- **Unit 1** is in Mode 4 at 195°F following a shutdown 18 hours earlier for refueling
- RPV Level is 40 inches and steady
- BOTH Recirc ASDs are Danger tagged for maintenance
- "B" Loop RHR is in Shutdown Cooling when a loss of RPS 'B' occurs

Which ONE of the choices below describes the effects on core circulation and decay heat removal in accordance with 34AB-E11-001-1, "Loss of Shutdown Cooling," and the required actions to restore a PRIMARY decay heat removal method IAW 34AB-C71-002-1, "Loss of RPS?"

A. ONLY an alternate method of decay heat removal is required.

Align RHR Loop II for Shutdown Cooling then manually transfer RPS 'B' to alternate and reset PCIS.

B.✓ Alternate methods of decay heat removal AND core circulation are required.

Manually transfer RPS 'B' to alternate, reset PCIS and align RHR Loop II for Shutdown Cooling.

C. ONLY an alternate method of core circulation is required.

Manually transfer RPS 'B' to alternate, reset PCIS and align RHR Loop II for Shutdown Cooling.

D. EITHER an alternate method of decay heat removal OR core circulation is required.

Align RHR Loop II for Shutdown Cooling then manually transfer RPS 'B' to alternate and reset PCIS.

Clarification Guidance for SRO-only Questions
Rev 1 (03/11/2010) Q#77 K/A 205000A2.07

II. Some examples of additional knowledge and abilities as they pertain to an SRO license and the 10 CFR 55.43(b) topics [ES-401, Section D.1.c]:

A. Conditions and limitations in the facility license. [10 CFR 55.43(b)(1)]

Some examples of SRO exam items for this topic include:

- Reporting requirements when the maximum licensed thermal power output is exceeded.
- Administration of fire protection program requirements such as compensatory actions associated with inoperable sprinkler systems, fire doors, etc.
- The required actions for not meeting administrative controls listed in Technical Specification (TS) Section 5 or 6, depending on the facility (e.g., shift staffing requirements).
- National Pollutant Discharge Elimination System (NPDES) requirements, if applicable.
- Processes for TS and FSAR changes.

Note: The analysis and selection of required actions for TS Sections 3 and 4 may be more appropriately listed in the following 10 CFR 55.43 topic.

B. Facility operating limitations in the TS and their bases. [10 CFR 55.43(b)(2)]

Some examples of SRO exam items for this topic include:

- Application of Required Actions (Section 3) and Surveillance Requirements (SR) (Section 4) in accordance with rules of application requirements (Section 1).
- Application of generic Limiting Condition for Operation (LCO) requirements (LCO 3.0.1 thru 3.0.7; SR 4.0.1 thru 4.0.4).
- Knowledge of TS bases that are required to analyze TS required actions and terminology.
- Same items listed above for the Technical Requirements Manual (TRM) and Offsite Dose Calculation Manual (ODCM).

SRO-only knowledge generally cannot be claimed for questions that can be answered *solely* based on knowledge of ≤ 1 hour action statements and the safety limits since Reactor Operators (ROs) are typically required to know these items.

SRO-only knowledge generally cannot be claimed for questions that can be answered *solely* based on expected RO TS knowledge. RO's are typically expected to know the LCO statements and associated applicability information, i.e., the information above the double line separating the

78. 206000A2.07 001/20309CP1/201.083.A.08/NEW/P-EOP/SRO ONLY/206000A2.07/2/1/H/3/JSC/ELJ

Unit 2 was at 100% RTP when a seismic event occurred.

The following conditions exist:

- o RWL is -150 inches and steady
- o HPCI flowrate is at rated (ONLY high pressure system available)

- o A leak from the Torus that cannot be isolated

o Torus level	144 inches and lowering
o Torus pressure	3 psig
o Torus temperature	185°F

- o CST is unavailable

Based on the above conditions and IAW EOPs,

At 140 inches in the Torus, the HPCI NPSH Graph 17A & 17B _____ be IGNORED.

At 75 inches in the Torus, RPV pressure control will be directed from _____ .

Reference Provided

A. can;
31EO-EOP-015-2, CP-1 Point G, Emergency Depress Path

B. can;
31EO-EOP-010-2, RC (Non-ATWS) flow chart, RC/P path

C. can NOT;
31EO-EOP-015-2, CP-1 Point G, Emergency Depress Path

D. can NOT;
31EO-EOP-010-2, RC (Non-ATWS) flow chart, RC/P path

Description:

Align, operate, and maximize injection using the following systems:
- Table 8
- Table 2A
- Table 9 per 31EO-EOP-110-2 (Table 9 system use is permitted but not required at this time)

Ignore NPSH and Vortex Limits

- RCIC, with suction from the condensate storage tank if available, per 34SO-E51-001-2. If necessary, defeat any or all of the following:
  - -high torus water level suction transfer logic per 31EO-EOP-100-2
  - -low reactor pressure isolation per 31EO-EOP-100-2
  - -high area temperature isolation per 31EO-EOP-100-2
- HPCI, with suction from the condensate storage tank if available, per 34SO-E41-001-2. If necessary, defeat one or both of the following:
  - -high torus water level suction transfer logic per 31EO-EOP-100-2
  - -high area temperature isolation per 31EO-EOP-100-2

Based on the condition where RWL is being maintained at -150 inches with only HPCI injecting, the applicant will have to look at the NPSH limit graphs for HPCI and conclude that HPCI is operating in the safe region until a leak occurs in the Torus (lowers <146 inches) which causes HPCI to move to the unsafe region due to shifting from graph 17A to 17B. CP-1 states "align, operate and maximize injection using the following systems. HPCI is one of the Table 2A systems. CP-1 also states that NPSH and Vortex limits can be ignored. The SRO will have to decide if HPCI flow can be lowered to return to the Safe region of the NPSH limit graph.

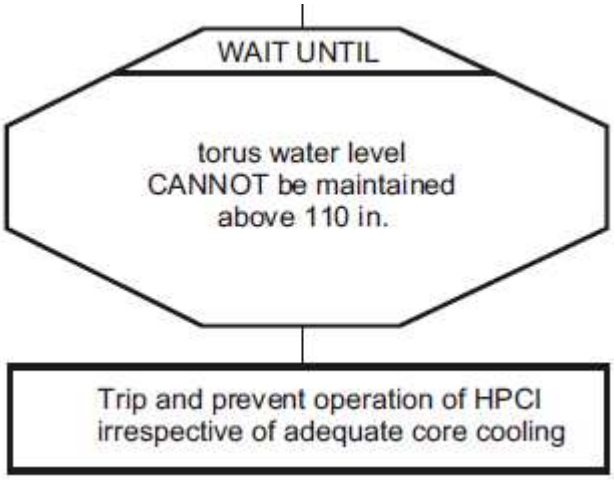

As Torus continues to lower to 75 inches, HPCI has to be tripped and operation prevented so that the turbine exhaust line does not become uncovered and overpressurize the containment. Since HPCI is secured, RWL will lower rapidly since it was the only high pressure injection source. Once it is determined RWL cannot be maintained above -185 inches, an emergency depressurization will be performed.

Once it is determined that an emergency depressurization is required, the SRO will transition from the RC flowchart RC/P path due to the override below. The applicant will then go to CP-1 Point G and perform an Emergency Depressurization.

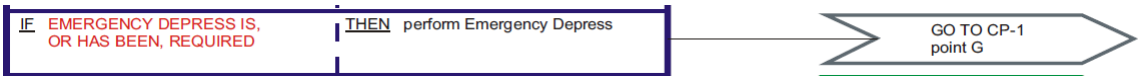

SRO JUSTIFICATION:

The SRO must have detailed procedure knowledge of the EOPs. The SRO is required to understand two seperate parts for the detailed knowledge of the EOPs. The first is to know that the HPCI system is allowed to be operated beyond its NPSH limit in order to maintain adequate core cooling (maintaining RWL above top of active fuel). This decision step is beyond the required knowledge of a RO applicant. The second question deals with EOP flow chart usage and decision points on the EOP CP-1 flowchart. The SRO must make a decision on CP-1 override asking if Emergency Depressurization is required then transition to the CP-1 flowchart point G.

K/A JUSTIFICATION:

This question satisfies the K/A statement by requiring the applicant to know the effects that lowering Torus water level will have on the HPCI system. If the applicant does not remove HPCI from service prior to uncovering the exhaust line, containment will become inoperable. The SS will have to predict this by knowing in detail the steps in the PC flowchart.

The "B" distractor is plausible since the first part is correct. The second part is plausible if the applicant thinks HPCI is still in operation and maintaining RWL at -150 inches. If the applicant thinks about RCIC and realizes that RCIC does not have to be shutdown before its exhaust is uncovered and thinks HPCI is the same as RCIC. The applicant may also think that the Torus level for uncovering the HPCI exhaust is 57.5 inches which is the level the SRV T quenchers become uncovered.

The "C" distractor is plausible if the applicant thinks that operating in the UNSAFE region mandates that the flow has to be lowered so that all flow is not completely removed. The applicant may also think that flow must be lowered if they think HPCI and RCIC are similiar since RCIC does not have NPSH limitations. The flow could also be lowered if the RWL was increasing therefore the applicant could lower to the point where level is steady. The second part is plausible since it is correct.

The "D" distractor is plausible if the applicant thinks that operating in the UNSAFE region mandates that the flow has to be lowered so that all flow is not completely removed. The applicant may also think that flow must be lowered if they think HPCI and RCIC are similiar since RCIC does not have NPSH limitations. The flow could also be lowered if the RWL was increasing therefore the applicant could lower to the point where level is steady. The second part is plausible if the applicant thinks HPCI is still in operation and maintaining RWL at -150 inches. If the applicant thinks about RCIC and realizes that RCIC does not have to be shutdown before its exhaust is uncovered and thinks HPCI is the same as RCIC. The applicant may also think that the Torus level for uncovering the HPCI exhaust is 57.5 inches which is the level the SRV T quenchers become uncovered.

A. **Correct** - See description above.

B. **Incorrect** - See description above.

C. **Incorrect** - See description above.

D. **Incorrect** - See description above.

References:
Unit 2 Graph 17A and 17B HPCI PUMP NPSH LIMIT

K/A:

206000 High Pressure Coolant Injection System

A2. Ability to (a) predict the impacts of the following on the HIGH PRESSURE COOLANT INJECTION SYSTEM ; and (b) based on those predictions, use procedures to correct, control, or mitigate the consequences of those abnormal conditions or operations: (CFR: 41.5 / 45.6)

A2.07 Low suppression pool level: BWR-2,3,4 . . . . . 3.4 3.6

SRO only because of link to 10CFR55.43 (b)(5):Assessing plant conditions (normal, abnormal, or emergency) and then selecting a procedure or section of a procedure to mitigate, recover, or with which to proceed

LESSON PLAN/OBJECTIVE:

E41-HPCI-LP-00501, High Pressure Coolant Injection (HPCI), **Ver 6.0**
EOP-CP1-LP-20309, Contingency Procedures (CP-1), **Ver 2.0**, EO 201.083.A.08

References used to develop this question:

SRO ONLY Guideline (See below)
31EO-EOP-010-2 RPV CONTROL (NON-ATWS), **Ver 9**
31EO-EOP-015-2, Alternate Level Control, Steam Cooling & Emergency RPV Depressurization, **Ver 8**
Unit 2 Graph 17A and 17B HPCI Pump NPSH Limit

Clarification Guidance for SRO-only Questions
Rev 1 (03/11/2010) Q#78 K/A 206002A2.07

C. Facility licensee procedures required to obtain authority for design and operating changes in the facility. [10 CFR 55.43(b)(3)]

Some examples of SRO exam items for this topic include:

- 10 CFR 50.59 screening and evaluation processes.
- Administrative processes for temporary modifications.
- Administrative processes for disabling annunciators.
- Administrative processes for the installation of temporary instrumentation.
- Processes for changing the plant or plant procedures.

Section IV provides an example of a satisfactory SRO-only question related to this topic.

D. Radiation hazards that may arise during normal and abnormal situations, including maintenance activities and various contamination conditions. [10 CFR 55.43(b)(4)]

Some examples of SRO exam items for this topic include:

- Process for gaseous/liquid release approvals, i.e., release permits.
- Analysis and interpretation of radiation and activity readings as they pertain to selection of administrative, normal, abnormal, and emergency procedures.
- Analysis and interpretation of coolant activity, including comparison to emergency plan criteria and/or regulatory limits.

SRO-only knowledge should not be claimed for questions that can be answered *solely* based on RO knowledge of radiological safety principles; e.g., RWP requirements, stay-time, DAC-hours, etc.

E. Assessment of facility conditions and selection of appropriate procedures during normal, abnormal, and emergency situations. [10 CFR 55.43(b)(5)]

This 10 CFR 55.43 topic involves both 1) assessing plant conditions (normal, abnormal, or emergency) and then 2) selecting a procedure or section of a procedure to mitigate, recover, or with which to proceed. One area of SRO level knowledge (with respect to selecting a procedure) is knowledge of the content of the procedure versus knowledge of the procedure's overall mitigative strategy or purpose.

The applicant's knowledge can be evaluated at the level of 10 CFR 55.43(b)(5) by ensuring that the additional knowledge of the procedure's content is required to correctly answer the written test item, for example:

79. 215002G2.1.7 001/30005TS/300.006.A.18/NEW/TECH SPEC/SRO ONLY/215002G2.1.7/2/2/H/3/ARB/ELJ

Unit 2 is operating at 70% RTP with Control Rod movement in progress.

While withdrawing a control rod, the following valid indications exist:

- o Reactor Power increases to 71% RTP

- o RBM A indication increases to 111%
- o RBM B indication increases to 107%

NO alarms are received.

NO Control Rod Blocks are received.

TS LCO 3.3.2, Control Rod Block Instrumentation is entered:

- o Required Action B.1 is COMPLETE

With the above conditions,

LCO 3.3.2 was entered due to the indications of RBM _____ .

IAW Tech Specs 3.0.4 and WITHOUT any further risk assessments, reactor power _____ be maintained at the current power level for an unlimited period of time.

Reference Provided

A. ✔ "A" ONLY;
can

B. "A" ONLY;
can NOT

C. "A" AND "B";
can

D. "A" AND "B";
can NOT

Description:

Both RBM instruments separately receive the STP value from each of the four APRM channels. Based on this value, the RBM instrument selects one of three different RBM Average Flux Upscale setpoints or automatically bypasses itself. Each RBM channel designates a hierarchy of normal and alternate APRM channels to use as their reference APRM channel. The alternate channels are used in hierarchical order when the preferred channels are not available. The primary reference APRM for RBM "A" is APRM "A" with first alternate as "C" APRM and the second alternate is "D" APRM. The primary reference APRM for RBM "B" is APRM "B" with

first alternate as "D" APRM and the second alternate is "C" APRM. The RBM channel automatically bypasses itself when the reference APRM STP value is below the RBM Low Power Setpoint. The Low Trip Setpoint is active when STP is between the RBM Low Power Setpoint and the Intermediate Power Setpoint, the intermediate Trip Setpoint is active when STP is between the Intermediate Power Setpoint and the High Power Setpoint, and the High Trip setpoint is active when STP is above the High Power Setpoint. Seemingly contrary to their designations, the Low Trip Setpoint is a greater value than the Intermediate Trip Setpoint which, in turn, is a greater value than the High Trip Setpoint. This reflects the reduction of operating margin before an alarm is reached as the overall reactor power increases. The designation or name of the trip indicates the range of STP values over which the trip setpoint is active.

The RBM Alarm Setpoints are as follows:

Upscale High Alarm	105.5%
Upscale Int. Alarm	109.3%
Upscale Low Alarm	115.1%
Downscale Alarm	95.0%

RBM Power Setpoints:

High Power Setpoint	82.0%
Int. Power Setpoint	62.0%
Low Power Setpoint	27.0%

IAW TS LCO 3.3.2.1, RBM is required to be operable when reactor power is ≥29% RTP. Below this value, RBM is not required, therefore not meeting the applicability.

With reactor power at 70% RTP, the Intermediate Power Setpoint will be in effect (109.3%). RBM A exceeded this setpoint but did not generate an alarm nor control rod block, therefore, will be considered inoperable.

LCO 3.0.4 states "When an LCO is not met, entry into a mode or other specified condition in the Applicability shall only be made:

a. When the associated ACTIONS to be entered permit continued operation in the MODE or other specified condition in the Applicability for an **unlimited** period of time,

b. After performance of a risk assessment addressing inoperable systems and components, consideration of the results, determination of the acceptability of entering the MODE or other specified condition in the Applicability, and establishment of risk management actions, if appropriate; exceptions to this specification are stated in the individual Specifications, or

c. When an allowance is stated in the individual value, parameter, or other Specification."

Althouh the LCO is NOT met, operation at this power level is allowed due to LCO 3.0.4a. above.

SRO JUSTIFICATION:

The SRO must have detailed knowledge of LCO 3.0.4, Motherhood Statements" in order to answer this question. This type of knowledge is above the RO knowledge level.

K/A JUSTIFICATION:

This question satisfies the K/A statement by requiring the applicant to evaluate RBM instrument indication (plant performance) and then decide on the maximum reactor power allowed (operational judgment) based on RBM instruments.

The "B" distractor is plausible since the first part is correct. The second part is plausible if the applicant does not properly apply TS 3.0.4 and thinks that continuous operation above 29% will not be allowed, therefore lowering reactor power to below the LCO applicability.

The "C" distractor is plausible if the applicant uses the low power setpoint versus the intermediate power setpoint and then thinks both RBM instruments are above the upscale setpoint without generating an alarm or control rod block. The second part is plausible since it is correct.

The "D" distractor is plausible if the applicant uses the low power setpoint versus the intermediate power setpoint and then thinks both RBM instruments are above the upscale setpoint without generating an alarm or control rod block. The second part is plausible if the applicant does not properly apply TS 3.0.4 and thinks that continuous operation above 29% will not be allowed, therefore lowering reactor power to below the LCO applicability.

A. **Correct** - See description above.

B. **Incorrect** - See description above.

C. **Incorrect** - See description above.

D. **Incorrect** - See description above.

References:
U2 TS 3.3.2, Control Rod Block Instrumentation (page 3.3-15) and Partial Table 3.3.2.1-1 (page 3.3-15) ONLY

K/A:

215002 Rod Block Monitor System

G2.1.7 Ability to evaluate plant performance and make operational judgments based on operating characteristics, reactor behavior, and instrument interpretation.
(CFR: 41.5 / 43.5 / 45.12 / 45.13) 4.4 4.7

REPLACED THE BELOW K/A AFTER PHONE CONVERSATION WITH CHIEF EXAMINER PHIL CAPEHART ON 10/20/2014.

215002 Rod Block Monitor System

G2.1.19 Ability to use plant computers to evaluate system or component status. (CFR: 41.10 / 45.12) 3.9 3.8

SRO only because of link to 10CFR55.43(b)(2): Facility operating limitations in the technical specifications and their bases.

LESSON PLAN/OBJECTIVE:

LT-LP-30005, Technical Specifications, **Ver.8.0**, EO 300.006.A.18
C51-PRNM-LP-01203, Power Range Neutron Monitoring System, **Ver. 8.0**, EO 300.010.C.01

References used to develop this question:

SRO ONLY Guideline (See below)
TS LCO 3.0.4, **Amendment 194**
TS LCO 3.3.2.1, Control Rod Block Instrumentation, **Amendment 135**
TS Table 3.3.2.1-1, Control Rod Block Instrumentation Table, **Amendment 210**

80. 223002A2.01 001/30005TS/300.006.A.22/MOD/TECH SPECS/SRO ONLY/223002A2.01/2/1/H/2/JSC/ELJ

Unit 2 is operating at 60% RTP when 600V Bus 2D de-energizes.

Maintenance reports it will take approximately 10 hours to repair.

With the above condition,

2G31-F004, RWCU Outboard Isolation, valve will _____ .

IAW Tech Specs, a Required Action Statement MUST be entered for _____ .

A. ✓ travel close;
600VAC 2D ONLY

B. travel close;
600VAC 2D and ALSO for Essential Cabinet 2B

C. remain open;
600VAC 2D ONLY

D. remain open;
600VAC 2D and ALSO for Essential Cabinet 2B

Description:

TS LCO 3.0.6 states the following:
<u>When a supported system LCO is not met solely due to a support system LCO not being met, the Conditions and Required Actions associated with this supported system are not required to be entered. Only the support system LCO ACTIONS are required to be entered.</u> This is an exception to LCO 3.0.2 for the supported system. In this event, additional evaluations and limitations may be required in accordance with specification 5.5.10, "Safety Function Determination Program (SFDP)." If a loss of safety function is determined to exist by this program, the appropriate conditions and required actions of the LCO in which the loss of safety function exists are required to be entered.
When a support system's required action directs a supported system to be declared inoperable or directs entry into conditions and required actions for a supported system, the applicable conditions and required actons shall be entered in accordance with LCO 3.0.2.

The power supply for the 2G31-F004 is 2R24-S022, 250V DC Rx Bldg Essential 2B.

<u>SRO JUSTIFICATION:</u>

The SRO must have detailed administrative procedure knowledge of technical specifications and how to determine LCO applicability based on LCO 3.0.6.

<u>K/A JUSTIFICATION:</u>

This question satisfies the K/A statement by requiring the applicant to know the effect that a loss

of power will have a PCIS (2G31-F004) and then requiring the applicant to know the required TS action to take based on the loss of power.

The "B" distractor is plausible since the first part is correct. The second part is plausible since TS directs it, however basis allows administrative control (vice hands on) is allowed for high radiation areas components. The second part is plausible if the applicant does not apply LCO 3.0.6 to the loss of 600D and cascades to the essential bus 2B.

The "C" distractor is plausible if the applicant thinks the power supply to 2G31-F004 is 2R24-S012. This is plausible if the applicant thinks this since the inboard isolation valve, 2G31-F001, is powered from 2R24-S011. This is how most inboard/outboard PCIS valves work. Since the loss of 600D causes the loss of RPS 2B, 2G31-F004 will travel close (still being powered). The second part is plausible since it is correct.

The "D" distractor is plausible if the applicant thinks the power supply to 2G31-F004 is 2R24-S012. This is plausible if the applicant thinks this since the inboard isolation valve, 2G31-F001, is powered from 2R24-S011. This is how most inboard/outboard PCIS valves work. Since the loss of 600D causes the loss of RPS 2B, 2G31-F004 will travel close (still being powered). The second part is plausible if the applicant does not apply LCO 3.0.6 to the loss of 600D and cascades to the essential bus 2B.

A. **Correct** - See description above.

B. **Incorrect** - See description above.

C. **Incorrect** - See description above.

D. **Incorrect** - See description above.

References:
NONE

K/A:

223002 Primary Containment Isolation System/Nuclear Steam Supply Shut-Off

A2. Ability to (a) predict the impacts of the following on the PRIMARY CONTAINMENT ISOLATION SYSTEM/NUCLEAR STEAM SUPPLY SHUT-OFF ; and (b) based on those predictions, use procedures to correct, control, or mitigate the consequences of those abnormal conditions or operations: (CFR: 41.5 / 45.6)

A2.01 A.C. electrical distribution failures 3.2 3.5

SRO only because of link to 10CFR55.43 (b)(2): Knowledge of TS bases that are required to analyze TS required actions and terminology.

LESSON PLAN/OBJECTIVE:

LT-LP-30005, Technical Specifications, **Ver 8**, EO 300.006.A.22

References used to develop this question:

SRO ONLY Guideline (See below)
34AB-R22-001-2, Loss of DC Buses, Attachment 6, **Ver 4.3**
Unit 2 TS, **Ver 211**
Unit 2 Bases, **Ver 82**

Modified from HLT Database Q#262002A2.01-001 which was used on
NRC Exam 2009-301 Q#80

Original Question

Unit 2 was operating at 100% power when a loss of 600VAC "2D" occurred.

Which ONE of the below choices completes both of these statements concerning the power supply for 2R25-S063, Vital AC Distribution Bus and Tech Specs applicable to 600 VAC "2D" and Essential Cabinet "2B"?

IMMEDIATELY following the loss of 600VAC "2D", 2R25-S063 will be powered from _____ .

In accordance with Tech Specs, a Required Action Statement MUST be entered for _____ .

A.✓ the Vital AC Batteries;
600VAC "2D" ONLY

B. 600 VAC "2C";
600VAC "2D" ONLY

C. the Vital AC Batteries;
600VAC "2D" AND also for Essential Cabinet "2B"

D. 600 VAC "2C";
600VAC "2D" AND also for Essential Cabinet "2B"

Clarification Guidance for SRO-only Questions
Rev 1 (03/11/2010) Q#80 K/A 223002A2.01

II. Some examples of additional knowledge and abilities as they pertain to an SRO license and the 10 CFR 55.43(b) topics [ES-401, Section D.1.c]:

A. Conditions and limitations in the facility license. [10 CFR 55.43(b)(1)]

Some examples of SRO exam items for this topic include:

- Reporting requirements when the maximum licensed thermal power output is exceeded.
- Administration of fire protection program requirements such as compensatory actions associated with inoperable sprinkler systems, fire doors, etc.
- The required actions for not meeting administrative controls listed in Technical Specification (TS) Section 5 or 6, depending on the facility (e.g., shift staffing requirements).
- National Pollutant Discharge Elimination System (NPDES) requirements, if applicable.
- Processes for TS and FSAR changes.

Note: The analysis and selection of required actions for TS Sections 3 and 4 may be more appropriately listed in the following 10 CFR 55.43 topic.

B. Facility operating limitations in the TS and their bases. [10 CFR 55.43(b)(2)]

Some examples of SRO exam items for this topic include:

- Application of Required Actions (Section 3) and Surveillance Requirements (SR) (Section 4) in accordance with rules of application requirements (Section 1).
- Application of generic Limiting Condition for Operation (LCO) requirements (LCO 3.0.1 thru 3.0.7; SR 4.0.1 thru 4.0.4).
- Knowledge of TS bases that are required to analyze TS required actions and terminology.
- Same items listed above for the Technical Requirements Manual (TRM) and Offsite Dose Calculation Manual (ODCM).

SRO-only knowledge generally cannot be claimed for questions that can be answered *solely* based on knowledge of ≤ 1 hour action statements and the safety limits since Reactor Operators (ROs) are typically required to know these items.

SRO-only knowledge generally cannot be claimed for questions that can be answered *solely* based on expected RO TS knowledge. RO's are typically expected to know the LCO statements and associated applicability information, i.e., the information above the double line separating the

Clarification Guidance for SRO-only Questions
Rev 1 (03/11/2010) Q#80 K/A 223002A2.01

Figure 1: Screening for SRO-only linked to 10 CFR 55.43(b)(2) (Tech Specs)

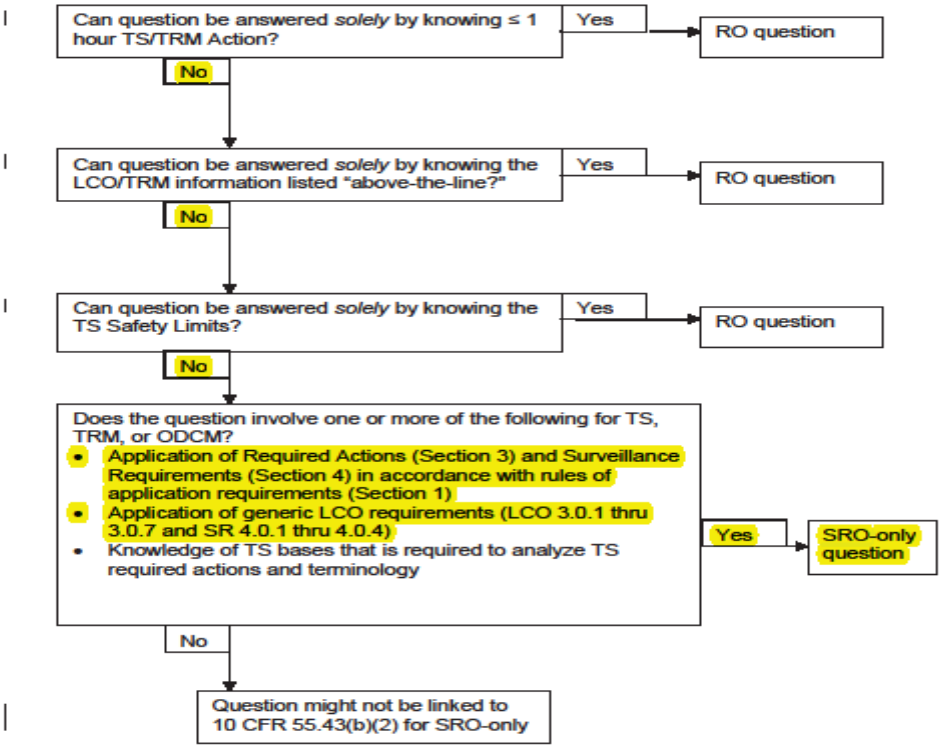

Page 5 of 16

81. 259002G2.4.20 001/20326CP2/201.087.A.15/NEW/P-EOP/SRO ONLY/259002G2.4.20/2/1/H/3/ARB/ELJ

Unit 2 was operating 100% RTP when a leak inside the Drywell occurs resulting in the following conditions:

- o All RWL instruments display erratic indication simultaneously
- o Drywell pressure stabilizes at 17 psig
- o Torus pressure stabilizes at 15 psig

Subsequently, the Reactor is Emergency Depressurized.

- o RPV injection is started
- o RPV pressure stabilizes at 60 psig

IAW the EOPs and with the above conditions,

Injection was FIRST allowed when RPV pressure dropped below the _____ .

With RPV pressure stabilizing at 60 psig, securing injection pumps or throttling injection valves _____ ALLOWED.

A. Minimum Steam Cooling Pressure;
is

B. Minimum Steam Cooling Pressure;
is NOT

C. shutoff head of the operating pumps;
is

D. ✓ shutoff head of the operating pumps;
is NOT

Description:

CP-2 is required because all level instruments are unavailable (erratic behavior). CP-1 is the normal emergency depressurization flowchart. All actions associated with flooding and emergency depressurization are located on CP-2 for this situation. These actions include opening at least 5 SRVs and then bottling up the RPV to allow level to rise to the MSLs and water to flow out the SRVs. This will ensure adequate core cooling.

There are two legs for CP-2 flooding. One is for an ATWS and the other one is for non-ATWS flooding. The difference between the two is the flooding portion after the ED.

For a Non-ATWS, flooding is accomplished by starting and operating as many injection sources to establish at least a 50 psid from RPV pressure and Torus pressure. Injection will **first** occur as soon as RPV pressure lowers to less than the shutoff head of the available pumps. Shutoff

head is 383 psig for CS and 220 psig for RHR on Unit 2.

An ATWS flooding is different in that RPV pressure has to be reduced to below the Minimum Steam Cooling Pressure before injection is **first** allowed to raise the RPV pressure above this minimum steam cooling pressure. It is performed one pump at a time (CS only used if absolutely necessary) to raise RPV pressure.

EOP Note 12 on CP-2, Non-ATWS flooding leg of the flowchart states "Raise injection means to start and operate as many injection systems as necessary to establish reactor pressure at least 50 psid above torus pressure and not decreasing, with at last 5 SRVs open. **Once RPV flooding pressure is reached, pumps may be sequenced off or throttled**." Injection systems can NOT be sequenced off or injection valves throttled with RPV pressure only 45 psid (60 psig - 15 psig Torus pressure = 45 psid).

SRO JUSTIFICATION:

The SRO must have detailed procedure knowledge of the EOP flowchart Notes. Note 12 is located deep inside the CP-2 EOP flowchart and the SRO must properly adhere to the content of Note 12 prior to sequencing off or throttling injection systems. This type of detailed EOP procedure knowledge is above the RO knowledge level.

K/A JUSTIFICATION:

This question satisfies the K/A statement by requiring the applicant to exhibit knowledge of EOP Note 12 on CP-2, Non-ATWS flooding leg of the flowchart which states "Raise injection means to start and operate as many injection systems as necessary to establish reactor pressure at least 50 psid above torus pressure and not decreasing, with at last 5 SRVs open. Once RPV flooding pressure is reached, pumps may be sequenced off or throttled." This question meets the K/A by asking the applicant when is it allowed to start sequencing off or throttling injection sources while maintaining adequate core cooling based on an EOP Note.

The "A" distractor is plausible if the applicant remembers the normal wait until RPV pressure is below the Minimum Steam Cooling pressure for injection to first start during an ATWS and does not properly apply CP-2 flowchart steps and thinks this is when to inject. The second part is plausible if the applicant does not remember the requirements for the 50 psid is above Torus pressure and thinks it is just RPV pressure >50 psig, thus thinking the steps for adequate core cooling have been satisified.

The "B" distractor is plausible if the applicant remembers the normal wait until RPV pressure is below the Minimum Steam Cooling pressure for injection to first start during an ATWS and does not properly apply CP-2 flowchart steps and thinks this is when to inject. The second part is plausible since it is correct.

The "C" distractor is plausible since the first part is correct. The second part is plausible if the applicant does not remember the requirements for the 50 psid is above Torus pressure and thinks it is just RPV pressure >50 psig, thus thinking the steps for adequate core cooling have been satisified.

A. **Incorrect** - See description above.

B. **Incorrect** - See description above.

C. **Incorrect** - See description above.

D. **Correct** - See description above.

References:
NONE

K/A:

259002 Reactor Water Level Control System

G2.4.20 Knowledge of the operational implications of EOP warnings, cautions, and notes. (CFR: 41.10 / 43.5 / 45.13) 3.8 4.3

SRO only because of link to 10CFR55.43 (5): Assessment of facility conditions and selection of appropriate procedure.

LESSON PLAN/OBJECTIVE:

EOP-CP2-LP-20326, CP-2 RPV Flooding, **Ver. 2.0**, EO 201.087.A.15

References used to develop this question:

SRO ONLY Guideline (See below)
31EO-EOP-016-2, CP-2, **Ver. 9.0**

82. 262002G2.4.46 001/02705R25/200.020.A.07/MOD/P-AB/SRO ONLY/262002G2.4.46/2/1/H/2/JSC/ELJ

Unit 2 is operating at 80% RTP.

At 13:00, the Vital AC Bus, 2R25-S063, DE-ENERGIZES and the following alarms ILLUMINATE:

- o VITAL AC SYS TROUBLE, (651-134)
- o FEEDWATER CONTROL SYSTEM TROUBLE, (603-132)
- o RFPT CONTROLLER TROUBLE, (603-150)
- o RWCU PUMP HIGH TEMP TRIP, (602-415)
- o 4TH STAGE HTR B007A/B LEVEL LOW, (656-007)
- o 4TH STAGE HTR B007B LEVEL LOW, (656-019)

- o TURB CNTL VLV FAST CLOSURE TRIP, (603-102)
- o TURB STOP VLV CLOSURE TRIP, (603-103)
- o REACTOR AUTO SCRAM SYSTEM A TRIP, (603-117)
- o REACTOR AUTO SCRAM SYSTEM B TRIP, (603-118)

Based on the above conditions,

The plant response at 13:00 _____ consistent with the loss of the Vital AC Bus.

IAW NMP-AD-031, SNC Reportability Roles, Responsibilities, and Fleet Requirements, a _____ report to the NRC Operations Center is REQUIRED.

A. was;
one (1) hour

B. was;
four (4) hour

C. was NOT;
one (1) hour

D. was NOT;
four (4) hour

Description:

Upon a loss of Vital AC, the following conditions will occur:
1. One or more of the following annunciators will alarm
-VITAL AC SYS TROUBLE (651-134)
-FEEDWATER CONTROL SYSTEM TROUBLE (603-132)
-RFPT CONTROLLER TROUBLE (603-150)
-RWCU PUMP HIGH TEMP TRIP (602-415)
-4TH STAGE HTR BOO7A LEVEL LOW (656-007)
-4TH STAGE HTR B007B LEVEL LOW (656-019)
-RFP C005A DISCH FLOW LOW (656-039)
-RFP C005B DISCH FLOW LOW (656-045)

2. Loss of rod position information system.
3. Loss of power to feedwater control system FW Master Controller and RFPT 2B M/A Station.
4. ALL recirc runbacks (# 1, # 2, # 3, & # 4) are disabled.
5. Increasing reactor power due to loss of extraction steam to 4th stage heaters.
(Extraction valves automatically restore once Vital AC is reenergized).
6. Loss of SJAE A and SJAE B, due to loss of signal input to main steam and 3rd Stage Pressure Controllers.
7. Loss of power to 2N21-R603, Condenser Hotwell Level Controller, and 2N21-N310, Condenser Hotwell "A" level transmitter.
8. 2C32-R603A, 2C32-R603B, 2C32-R603C, and 2C32-R603D, MSL Flow Indicators, indicate downscale.

The following Automatic actions will occur:
1. RFPT 2B speed control auto swaps to the Speed Setter at the last speed setting PRIOR to the power loss. RFPT 2A continues to operate in automatic mode based on the RWL signal selected.
2. Control Rod Select Block with any selected rod de-selecting.
3. 2N62-F057, Off Gas Stack Inlet valve, CLOSES.
4. Reactor Water Cleanup Pump Trips and 2G31-F001 and 2G31-F004 CLOSE.
5. Condensate, Condensate Booster, and Reactor Feed Pump minimum flow control valves fail OPEN.
6. IF vacuum decreases to 22.3 in. Hg, Main Turbine and RFPT's TRIP.
7. Loss of power supply to HMI monitors 2N32-K4001A AND 2N32-K4001B, KVM Extenders, and the HMI computers.
8. Main Turbine TRIPS, IF 2R25-S021 (backup power supply for Mark VI) is not available.

The Main Turbine should not trip solely based on a loss of Vital AC at this power level even if Mark VI controls loses its normal power supply. Mark VI will remain powered from 2R25-S021. 2R25-S021 120/208V Dist Pnl 2A is the backup supply to Mark VI.

SRO JUSTIFICATION:

The SRO must have detailed administrative procedure knowledge of NMP-AD-031, SNC Reportability Roles, Responsibilities, and Fleet Requirements. The candidate must know the reporting requirements to the NRC based on 1 hour and 4 hour notifications.

K/A JUSTIFICATION:

This question satisfies the K/A statement by requiring the applicant to understand the plant conditions associated with available alarms in the MCR and be able to make Notifications to the NRC within the required time limits.

The "A" distractor is plausible since all the annunciators are consistent with a loss of Vital AC if the loss were to occur at 100% RTP. If the loss occurred at 100% RTP, the Unit would scram due to an APRM Upscale trip on a loss of FW heating (loss of extraction steam to the 4th stage heaters). The second part is plausible since the SRO is required to know both the 1 hour and 4 hour reporting requirements from memory.

The "B" distractor is plausible since all the annunciators are consistent with a loss of Vital AC if the loss were to occur at 100% RTP. If the loss occurred at 100% RTP, the Unit would scram due to an APRM Upscale trip on a loss of FW heating (loss of extraction steam to the 4th stage heaters). The second part is plausible since it is correct.

The "C" distractor is plausible since the first part is correct. The second part is plausible since the SRO is required to know both the 1 hour and 4 hour reporting requirements from memory.

A. **Incorrect** - See description above.

B. **Incorrect** - See description above.

C. **Incorrect** - See description above.

D. **Correct** - See description above.

References:
NONE

K/A:

262002 Uninterruptable Power Supply (A.C./D.C.)

G2.4.46 Ability to verify that the alarms are consistent with the plant conditions. (CFR: 41.10 / 43.5 / 45.3 / 45.12) 4.2 4.2

SRO only because of link to 10CFR55.43 (b)(1): Conditions and limitations in the facility license. (Reporting Requirements)

LESSON PLAN/OBJECTIVE:

R25-ELECT-LP-02705, Vital AC Electrical System, **Ver 3.0**, 200.020.A.07

References used to develop this question:

SRO ONLY Guideline
34AB-R25-001-2, Loss of Vital AC Bus, **Ver 6.13**
NMP-AD-031, SNC Reportability Roles, Responsibilities, and Fleet Requirements, **Ver 5.0**
34AR-603-109-2, REACTOR NEUTRON MONITORING SYS TRIP, **Ver 4.5**

Modified from HLT Database Q#295006AA2.05-001 which was used on
HLT-7 2012-301 NRC Exam Q#84

Original Question

Unit 2 is operating at 22% RTP when a pressure transient occurs resulting in the following:

- Reactor pressure lowers to 830 psig (lowest reached)
- Reactor water level increases to 50 inches (highest reached)

Subsequently, operators stabilize Reactor pressure and water level in their Normal bands.

With the above conditions, which ONE of the choices below describes the current plant status AND the reporting requirements IAW REG-0025, One, Four, and Eight Hour Reporting Requirements of 10 CFR 50.72?

When plant conditions stabilize, the U2 Reactor is expected to _____ and a _____ report is required for this transient.

A. have automatically scrammed;
one (1) Hour

B. have automatically scrammed;
four (4) Hour

C.✓ still be operating at 22% RTP;
one (1) Hour

D. still be operating at 22% RTP;
four (4) Hour

83. 268000A2.01 001/30005TS/300.010.A.06/NEW/TECH SPEC/SRO ONLY/268000A2.01/2/2/H/3/ARB/ELJ

Unit 2 is operating at 100% RTP.

At 08:00, Drywell Floor Drain Leakage was 1.3 gpm.

At 09:15, a small pipe break in the Drywell occurs.

Subsequent Drywell Floor Drain Leakage rates were calculated at the following times:

09:20 3.4 gpm
09:40 5.1 gpm

At 10:15, 2G11-F003, Floor Drain Valve, fails CLOSED.

At 10:25, the following alarm is received on Panel 2H11-P602:

- Drywell Floor Drains Sump Level High-High, 602-402

With the above Drywell leakage rates and conditions,

IAW TS LCO 3.4.4, RCS Operational Leakage, the FIRST time a Required Action Statement (RAS) is REQUIRED to be entered is _____ .

IAW TS Bases 3.4.5, RCS Leakage Detection Instrumentation, the LATEST listed time that the Drywell Floor Drain Sump Monitoring System will still be OPERABLE is _____ .

A. 09:20;
10:14

B.✔ 09:20;
10:24

C. 09:40;
10:14

D. 09:40;
10:24

Description:

Phil, you have already okayed this question (would be 7 of 10) for the K/A that was replaced on 10/23/2014. No changes have been made since you saw this question.

TS LCO 3.4.4 states:

RCS operational LEAKAGE shall be limited to:
a. No pressure boundary LEAKAGE;
b. ≤ 5 gpm unidentified LEAKAGE;
c. ≤ 30 gpm total LEAKAGE averaged over the previous 24 hour period; and

d. **≤ 2 gpm** increase in unidentified LEAKAGE within the previous 24 hour period in MODE 1.

TS Bases B3.4.5 states: - The drywell floor drain sump monitoring system is required to **alarm** in the control room, as well as quantify the unidentified LEAKAGE from the RCS. For the system to be considered OPERABLE, one of the two sump level monitoring portions of the system must be OPERABLE. **Upon receipt of an alarm (602-402)** from the sump level monitoring instrumentation, the unidentified LEAKAGE rate can be quantified by either the normal flow monitoring instrumentation or alternate means. Therefore, the normal flow monitoring portion of the system need not be OPERABLE for the drywell floor drain sump monitoring system to be considered OPERABLE. At 10:15, the normal flow monitoring instrumentation becomes inoperable but without alarm **(602-402)** present, therefore, the alternate means of quantifying is available. Once the alarm is received, the normal and alternate methods are inoperable.

The SRO must have detailed knowledge of TS B3.4.5 to understand that with the Drywell Floor Drain Monitoring system isolated, the system is still operable since there are NO alarms illuminated on Panel 2H11-P602. Once the alarm is received, the Drywell Floor Drain Monitoring System, is inoperable. This is above the RO knowledge level for TS.

K/A JUSTIFICATION:

This question meets the K/A by asking the applicant to determine the impact of a leak (pipe rupture) in the DW (DW Floor Drain sumps are a part of RADWASTE System) on TS entries and then using TS Bases to determine operability of the DW Floor Drain Sump Monitoring System.

The "A" distractor is plausible since the first part is correct. The second part is plausible if the applicant does not consider TS Bases and thinks since the DW Floor Drain system is isolated that the system is now inoperable.

The "C" distractor is plausible if the applicant only considers exceeding 5.0 gpm and does not consider the 2 gpm increase in a 24 hour period which occurred at 10:20. The second part is plausible if the applicant does not consider TS Bases and thinks since the DW Floor Drain system is isolated that the system is now inoperable.

The "D" distractor is plausible if the applicant only considers exceeding 5.0 gpm and does not consider the 2 gpm increase in a 24 hour period which occurred at 10:20. The second part is plausible since it is correct.

A. **Incorrect** - See description above.

B. **Correct** - See description above.

C. **Incorrect** - See description above.

D. **Incorrect** - See description above.

References:
NONE

K/A:

268000 Radwaste

A2. Ability to (a) predict the impacts of the following on the RADWASTE ; and (b) based on those predictions, use procedures to correct, control, or mitigate the consequences of those abnormal conditions or operations: (CFR: 41.5 / 45.6)

A2.01 System rupture 2.9 3.5

REPLACED THE BELOW K/A AFTER PHONE CONVERSATION & EMAIL WITH CHIEF EXAMINER PHIL CAPEHART ON 10/23/2014.

A2. Ability to (a) predict the impacts of the following on the RADWASTE ; and (b) based on those predictions, use procedures to correct, control, or mitigate the consequences of those abnormal conditions or operations: (CFR: 41.5 / 45.6)

A2.02 High turbidity water 2.3 2.7

SRO only because of link to 10CFR55.43(b)(2): Facility operating limitations in the technical specifications and their bases.

LESSON PLAN/OBJECTIVE:

LT-LP-30005, Technical Specifications, **Ver. 10.1**, EO 300.010.A.06

References used to develop this question:

Item 1: SRO ONLY Guideline
34AR-602-402-2, Drywell Floor Drains Sump Level High-High, **Ver. 3.4**
Unit 1 TS 3.4.4 RCS Operational LEAKAGE, **Amendment 266**
Unit 1 TS Bases B3.4.5, RCS Leakage Detection Instrumentation, **Rev. 15**

84. 295001G2.1.7 001/00401B31/300.010.A.13/MOD/TECH SPECS/SRO ONLY/295001G2.1.7/1/1/H/3/JSC/ELJ

Unit 2 was operating at 100% RTP with both Recirc pump speeds at 99% when ASD 2A malfunctions resulting in the following Recirc System indications:

At 11:00,

- o Jet Pump Total "A"Flow indication 28.6 Mlbm/hr
- o Jet Pump Total "B"Flow indication 42.2 Mlbm/hr

- o Recirc Pump 2A speed indication 83.6%
- o Recirc Pump 2B speed indication 99.0%

Subsequently, Recirc pump "B" speed is reduced which results in the following indications:

- o Jet Pump Total "A"Flow indication 31.3 Mlbm/hr
- o Jet Pump Total "B"Flow indication 36.3 Mlbm/hr

- o Recirc Pump 2A speed indication 83.6 %
- o Recirc Pump 2B speed indication 89.3 %

Based on the above conditions,

At 11:00, the MAXIMUM amount of time that the Jet Pump flow mismatch can EXIST without exceeding Tech Specs RAS and/or Abnormal Procedure limits is _____ .

After Recirc "B" Loop Jet Pump flow is reduced to 36.3 Mlbm/hr, Tech Specs RAS and/or Abnormal Procedure Jet Pump flow mismatch limits _____ SATISFIED.

A. 1.5 hours;
are

B. 1.5 hours;
are NOT

C. 24.0 hours;
are

D✓ 24.0 hours;
are NOT

Description:

Technical specifications require two loop operation or thermal limits to be adjusted for single loop operations within 24 hours of the mismatch. The plant is currently operating in single loop operation due to the flow mismatch.

According to SR 3.4.1.1, jet pump flows are required to be as follows:

both recirculation loops are in operation.

Verify recirculation loop jet pump flow mismatch with both recirculation loops in operation is:

a. ≤ 10% of rated core flow when operating at < 70% of rated core flow; and

b. ≤ 5% of rated core flow when operating at ≥ 70% of rated core flow.

At a total jet flow of 70.8 Mlbm/hr (70.8/77 = 92%), the flows are required to be within 5% (3.85 Mlbm/hr) of each other to be restored to two loop operation.

At a total jet flow of 67.6 Mlbm/hr (67.6/77 = 92%), the flows are required to be within 5% (3.85 Mlbm/hr) of each other to be restored to two loop operation.

100% rated flow is 77 mlbm/hr on Unit 2.

SRO JUSTIFICATION:

The SRO must have detailed administrative procedure knowledge Technical Specifications associated with the determination of operating in single loop mode and the associated times allowed before required actions are taken. This meets the SRO level since this is > 1 hr TS call.

K/A JUSTIFICATION:

This question satisfies the K/A statement by requiring the applicant to intrepret plant performance based on the reduced Jet pump flow and subsequent recover and make operability determinations on flow limits.

The "A" distractor is plausible if the applicant remembers the time limits associated with the recovery of a Recirc pump that has undergone a large flow mismatch of >35%. This large flow mismatch recovery is located in 34AB-B31-001-2, Reactor Recirculation Pump(s) Trip, or Recirc Loops Flow Mismatch, or ASD Power Cell Failure, attachment 1. This chart allows 0.5 hrs for the return of the loop to a positive flow condition and another 1 hr for the recovery of the flow to be within 35% of the operating loop. This total is 1.5 hours for the recovery. The second part is plausible if the applicant thinks the required flow mismatch has to be to be ≤ 10% (7.7 Mlbm/hr) of rated core flow. The 10% mismatch is applicable only if total jet pump flow is <70% (53.9 Mlbm/hr).

The "B" distractor is plausible if the applicant remembers the time limits associated with the recovery of a Recirc pump that has undergone a large flow mismatch of >35%. This large flow mismatch recovery is located in 34AB-B31-001-2, Reactor Recirculation Pump(s) Trip, or Recirc Loops Flow Mismatch, or ASD Power Cell Failure, attachment 1. This chart allows 0.5 hrs for the return of the loop to a positive flow condition and another 1 hr for the recovery of the flow to be within 35% of the operating loop. This total is 1.5 hours for the recovery. The second part is plausibe since it is correct.

The "C" distractor is plausible since the first part is correct. The second part is plausible if the applicant thinks the required flow mismatch has to be to be ≤ 10% (7.7 Mlbm/hr) of rated core flow. The 10% mismatch is applicable only if total jet pump flow is <70% (53.9 Mlbm/hr).

A. **Incorrect** - See description above.

B. **Incorrect** - See description above.

C. **Incorrect** - See description above.

D. **Correct** - See description above.

References:
NONE

K/A:

295001 Partial or Complete Loss of Forced Core Flow Circulation

G2.1.7 Ability to evaluate plant performance and make operational judgments based on operating characteristics, reactor behavior, and instrument interpretation.
(CFR: 41.5 / 43.5 / 45.12 / 45.13) 4.4 4.7

SRO only because of link to 10CFR55.43 (b)(2): Facility operating limitations in the TS and their bases.

LESSON PLAN/OBJECTIVE:

B31-RRS-LP-00401, Reactor Recirculation System, **Ver 10.5**, EO 300.010.A.13

References used to develop this question:

SRO ONLY Guideline
34AB-B31-001-2, Reactor Recirculation Pump(s) Trip, or Recirc Loops Flow Mismatch, or ASD Power Cell Failure, **Ver 10.8**
Unit 2 TS, **Ver 211**

Bank Question #295001AK1.02-003

Unit 1 is operating at 100% RTP when a malfunction results in the following Recirc System flow indications:

- Jet Pump Total "A"Flow indication 32.0 Mlb/hr
- Jet Pump Total "B"Flow indication 40.0 Mlb/hr
- Drive Flow "A" indication 40,000 gpm

Which ONE of the following choices correctly completes BOTH parts of this statement?

IAW 34AB-B31-001-1, "Reactor Recirculation Pump(s) Trip, or Recirc Loops Flow Mismatch" the "1A" Recirc Pump is considered to be _____ operation AND the "1B" Recirc Pump is operating _____ 100% rated pump flow.

A. in;
below (within)

B. in;
above (exceeding)

C. NOT in;
below (within)

D.✓ NOT in;
above (exceeding)

85. 295006AA2.02 001/20328RCA/201.071.A.03/MOD/P-EOP/SRO ONLY/295006AA2.02/1/1/H/3/ARB/ELJ

At 11:00, **Unit 1** was operating at 6% RTP.

A scram occurs resulting in the following conditions:

- o Twenty (20) Control rods at position 14
- o Eight (8) Control rods at position 08
- o ALL other Control rods at position 00

- o All IRMs are on RANGE 6 indicating mid-scale

At 11:01, the SRO enters 31EO-EOP-011-1, RCA RPV Control (ATWS).

At 11:04, the following conditions are reported:

- o Ten (10) Control rods at position 14
- o ALL other Control rods at position 00

- o All IRMs are on RANGE 3 indicating mid-scale

NO Boron has been injected.

All Containment and Reactor parameters are within normal bands following the scram.

IAW 31EO-EOP-011-1, RCA RPV Control (ATWS),

At 11:01, the SRO directed the OATC to insert Control rods using _____ .

At 11:04, RC/Q path _____ required to be exited.

A. 34AB-C11-005-1, Control Rod Insertion Methods;
is

B. 34AB-C11-005-1, Control Rod Insertion Methods;
is NOT

C. ✓ 31EO-EOP-103-1, EOP Control Rod Insertion Methods;
is

D. 31EO-EOP-103-1, EOP Control Rod Insertion Methods;
is NOT

Description:

At 11:01, IAW 31EO-EOP-011-1, RCA RPV Control (ATWS), based on the Control rod positions and resultant IRM status, if IRMs are above range 6 and NO boron has been injected, then the reactor is not shutdown and **31EO-EOP-103-1**, is entered to insert Control rods.

At 11:04, IAW 31EO-EOP-011-2, RCA RPV Control (ATWS), based on the new Control rod positions and resultant IRM status, IRMs are below range 6 and still NO boron has been injected, the reactor is shutdown (subcritical with IRMs below range 6) and 34AB-C71-001-2, Scram Procedure, is entered and the **RC/Q flowpath is exited**.

SRO JUSTIFICATION:

The SRO must have detailed procedure knowledge of RCA EOP flowchart including which procedure will be used based on plant conditions, Control rod position, IRM data, etc., and then decide if the RC/Q path is required to be exited (branched off) based on new plant conditions. This type of EOP flowchart knowledge is above the RO knowledge level.

K/A JUSTIFICATION:

This question satisfies the K/A statement by requiring the applicant to determine which procedure will be used to change the Control rod positions from14 & 08 to position 00.

The "A" distractor is plausible if the IRMs were below Range 6 and subcritical (shutdown) therefore 34AB-C11-005-1 would be used. The second part is plausible since it is correct.

The "B" distractor is plausible if the IRMs were below Range 6 and subcritical (shutdown) therefore 34AB-C11-005-1 would be used. The second part is plausible if the applicant does not remember the RC/Q override, which branches off to 34AB-C71-001-1, Scram Procedure, and thinks the RC/Q path is maintained. This would also be correct if IRMs remain above range 6 or if boron is injected.

The "D" distractor is plausible since the first part is correct. The second part is plausible if the applicant does not remember the RC/Q override, which branches off to 34AB-C71-001-1, Scram Procedure, and thinks the RC/Q path is maintained. This would also be correct if IRMs remain above range 6 or if boron is injected.

A. **Incorrect** - See description above.

B. **Incorrect** - See description above.

C. **Correct** - See description above.

D. **Incorrect** - See description above.

References:
NONE

K/A:

295006 SCRAM

AA2. Ability to determine and/or interpret the following as they apply to SCRAM : (CFR: 41.10 / 43.5 / 45.13)

AA2.02 Control rod position 4.3* 4.4*

SRO only because of link to 10CFR55.43(b)(5): Assessment of facility conditions and selection of appropriate procedure, recalling the action in the body of procedure and when to take the action.

LESSON PLAN/OBJECTIVE:

EOP-RCA-LP-20328, RPV Control - ATWS (RCA), **Ver. 3.0**, EO 201.071.A.03

Reference(s) used to develop this question:

SRO ONLY Guideline
31EO-EOP-011-1, RCA RPV Control (ATWS), **Ver.10.0**
34AB-C71-001-1, Scram Procedure, **Ver. 12.7**

Modified from HLT Database Q#295020G2.4.2-001 which was used on HLT 2011-301 NRC Exam Q#88

Original Question

Unit 1 was operating at 100% RTP when the MSIVs inadvertently closed. The following conditions exist after the closure AND PRIOR to entering any EOP flowcharts:

- o IRMs — Fully inserted
- o Reactor power — 40/125 IRM Range 4
- o Control rods — 50 rods NOT Full In
- o Reactor pressure — controlled by LLS
- o RWL — 9" and steady (lowest level reached 0.0")
- o NO Boron has been injected

IAW 31EO-EOP-011-1, RCA RPV Control (ATWS), which ONE of the following completes the statement concerning reactor pressure entry condition AND the procedure for inserting control rods?

The Entry condition for reactor pressure _____ EXCEEDED.

The Shift Supervisor is REQUIRED to enter _____ to insert control rods.

A.✓ was;
34AB-C11-005-1, Control Rod Insertion Methods

B. was NOT;
34AB-C11-005-1, Control Rod Insertion Methods

C. was;
31EO-EOP-103-1, Control Rod Insertion Methods

D. was NOT;
31EO-EOP-103-1, Control Rod Insertion Methods

86. 295008AA2.01 001/20327CP3/201.089.A.01/MOD/P-AB/SRO ONLY/295008AA2.01/1/2/H/3/ARB/ELJ

Unit 2 has scrammed from 100% RTP due to MSIV closure.

The following conditions exist:

- o Reactor Power — 3% and slowly increasing
- o RWL — 62 inches and slowly increasing
- o RPV Pressure — Maintained by LLS
- o HPCI injection flowrate — 4000 gpm
- o Torus Temperature — 101°F and slowly increasing

The LOWEST listed RWL that will cause the HPCI System to receive an automatic trip signal from high RWL is _____ .

With the above conditions, the SS will order ALL injection into the RPV stopped, except CRD, IAW _____ .

A. ✓ 52.0 inches;
34AB-C32-001-2, Reactor Water Level Above +60 inches

B. 52.0 inches;
31EO-EOP-113-2, Terminating and Preventing Injection into the RPV

C. 55. 0 inches;
34AB-C32-001-2, Reactor Water Level Above +60 inches

D. 55. 0 inches;
31EO-EOP-113-2, Terminating and Preventing Injection into the RPV

Description:

IAW 34SO-N30-001-2, Main Turbine Operation, the Unit 2 Main Turbine will trip when RWL reaches 54.0 inches. IAW 34SO-E41-001-2, High Pressure Coolant Injection (HPCI) System, Unit 2 HPCI will trip when RWL reaches 51.7 inches. Therefore, the LOWEST listed RWL that will cause HPCI to receive an automatic trip signal from high RWL is 52.0 inches.

The conditions listed in the override statement on 31EO-EOP-017-2, CP-3, combined with the inability to shut down the reactor through control rod insertion, dictate a requirement to promptly reduce reactor power in order to preserve primary containment integrity since, as long as these conditions exist, Torus heatup will continue. The method used to promptly reduce reactor power is the lowering of RWL. It's very important to note that this override divides CP-3 into two distinct flow paths:

- o When primary containment is NOT threatened, the conditions of the override are not met and a prompt reduction in reactor power is not required. RWL is not intentionally

lowered to below -60 inches unless the conditions of the next override require it.

- When the primary containment IS threatened and RWL is above TAF, the conditions of the override ARE met and RWL IS intentionally lowered all the way to -155 inches if required.

The SRO must pay very close attention to this override to ensure that actions are taken to lower RWL and reduce reactor power as soon as the conditions of the overrides are met.

IAW 31EO-EOP-017-2, CP-3, the override at C-2 will NOT be met since power is <5%, and Torus temp (101°F) is NOT in the BIIT curve eventhough SRVs are controlling RPV pressure and adding heat to containment. With the override at C-2 NOT met, the SRO will be required to address the next override at D-2 which will NOT be met also since power is <5%, thus proceeding further down the CP-3 path. With Primary Containment NOT being challenged and power is <5%, CP-3 requires RWL to be maintained between -185 inches and +50 inches (NOT lowered or terminated).

34AB-C32-001-2, step 4.2 requires all injection into the RPV to be terminated prior to RWL exceeding +100 inches. With RWL +62 inches and slowly increasing, the order to terminate all injection will be dictated by this abnormal procedure, not CP-3 steps.

SRO JUSTIFICATION:

The SRO must have detailed procedure knowledge of CP-3 overrrides and 34AB-C32-001-2 subsequent actions. The RO may know that RWL is required to be lowered just will not have the detailed procedure knowledge as to where this direction is coming from.

K/A JUSTIFICATION:

This second part of this question satisfies the K/A statement by requiring the applicant to decide which procedure will provide the guidance to control RWL during a high RWL ATWS condition. The CP-3 overrides use RWL as one of the parameters monitored and based on all conditions the SRO then decides which procedure steps are executed to control RWL. The first part of the question is RO knowledge.

The "B" distractor is plausible since the first part is correct. The second part is plausible if the applicant does not correctly apply the overrides/actions of CP-3 and only considers using the normal method of terminating RWL injection during an ATWS which is 31EO-EOP-113-2, Terminating and Preventing Injection into the RPV.

The "C" distractor is plausible since this is the RWL value at which the Main Turbine will automatically trip (actual setpoint is 54.0 inches) and would be correct if asking for the Main Turbine automatic trip setpoint. The second part is plausible since it is correct.

The "D" distractor is plausible since this is the RWL value at which the Main Turbine will automatically trip (actual setpoint is 54.0 inches) and would be correct if asking for the Main Turbine automatic trip setpoint. The second part is plausible if the applicant does not correctly apply the overrides/actions of CP-3 and only considers using the normal method of terminating RWL injection during an ATWS which is 31EO-EOP-113-2, Terminating and Preventing

Injection into the RPV.

A. **Correct** - See description above.

B. **Incorrect** - See description above.

C. **Incorrect** - See description above.

D. **Incorrect** - See description above.

References:
NONE

K/A:

295008 High Reactor Water Level

AA2. Ability to determine and/or interpret the following as they apply to HIGH REACTOR WATER LEVEL : (CFR: 41.10 / 43.5 / 45.13)

AA2.01 Reactor water level 3.9 3.9

REPLACED THE BELOW K/A AFTER PHONE CONVERSATION WITH CHIEF EXAMINER PHIL CAPEHART ON 10/20/2014.

295008 High Reactor Water Level

AA2. Ability to determine and/or interpret the following as they apply to HIGH REACTOR WATER LEVEL : (CFR: 41.10 / 43.5 / 45.13)

AA2.05 Swell 2.9 3.1

SRO only because of link to 10CFR55.43(b)(5): Assessment of facility conditions and selection of appropriate procedure, recalling the action in the body of procedure and when to take the action.

LESSON PLAN/OBJECTIVE:

EOP-CP3-LP-20327, Level / Power Control (CP-3), **Ver. 4.0**, EO 201.089.A.01

References used to develop this question:

SRO ONLY Guideline
34AB-C32-001-2, Reactor Water Level Above +60 Inches, **Ver 1.1**
34SO-E41-001-2, High Pressure Coolant Injection (HPCI) System, **Ver. 28.3**

34SO-N30-001-2, Main Turbine Operation, **Ver. 27.1**

Modified from HLT Database Q#295008AA2.01-001

Original Question

Unit 2 has scrammed from 100% power.

The following conditions exist:

- o Reactor Power ..... 3% (slowly decreasing)
- o Reactor Pressure ..... 750 psig (slowly decreasing)
- o Reactor Water Level (RWL) ..... (+)72 inches (slowly increasing)
- o SPDS ..... Unavailable
- o High Pressure Coolant Injection (HPCI) injecting into the RPV ..... 4000 gpm

Based on the above plant conditions,

Which one of the following correctly IDENTIFIES if RWL indication must be corrected for Rx pressure prior to using for RWL determination and the procedure used to terminate injection into the RPV?"

RWL indication _____ have to be corrected for Rx pressure for RWL determination.

The SS will order ALL injection terminated into the RPV, except CRD, IAW _____ .

A. does;
31EO-EOP-113-2, "Terminating and Preventing Injection into the RPV"

B. does;
34AB-C32-001-2, "Reactor Water Level Above +60 inches"

C. does NOT;
31EO-EOP-113-2, "Terminating and Preventing Injection into the RPV"

D.✓ does NOT;
34AB-C32-001-2, "Reactor Water Level Above +60 inches"

87. 295014G2.4.11 001/01501MSRFW/200.050.B.02/NEW/P-AB/SRO ONLY/295014G2.4.11/1/2/H/3/ARB/ELJ
need new SRO guideline sheet.
Unit 2 is operating at 76% RTP when a loss of feedwater heating event results in a feedwater temperature reduction to 360°F.

- o ALL required Reactor power reductions are complete
- o Verification of Core thermal limits is in progress

With the above conditions,

IAW 34AB-N21-001-2, Loss Of Feedwater Heating, the MAXIMUM listed Reactor power ALLOWED is _____ .

The Final Feedwater temperature _____ REQUIRED to be tracked IAW 34SV-SUV-020-0, Core Parameter Surveillance.

Reference Provided

A. 55% RTP;
is

B. 55% RTP;
is NOT

C. ✔ 65% RTP;
is

D. 65% RTP;
is NOT

Description:

If necessary reduce Rx Power by performing the flow chart in 34AB-N21-001.

The reduction in thermal power is necessary to maintain or prevent exceeding thermal limits. A reduction in feedwater injection temperature is a positive reactivity addition and causes all three thermal limits to have reduced margins.

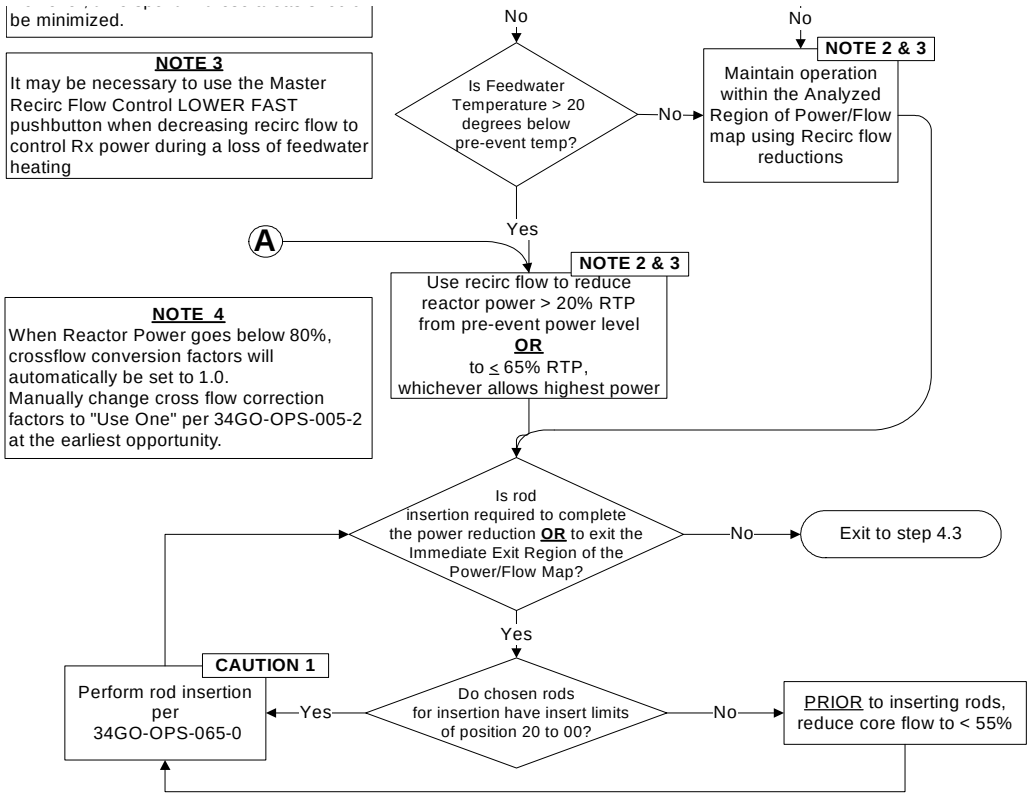

The FINAL FEEDWATER TEMPERATURE REDUCTION CUMULATIVE USAGE TRACKING Attachment of this procedure will be performed any time that the Final Feedwater Temperature is more than 10 degrees below the Nominal Temperature Line of the Feedwater Temperature vs. Core Power Map of 34GO-OPS-005-1/2, Power Changes.

SRO JUSTIFICATION:

The SRO must have detailed procedure knowledge of the Loss of Feedwater Heating abnormal procedure and select the correct section of the procedure (flowchart) and be able to make decisions to mitigate core damage (reduced margin to thermal limits).

K/A JUSTIFICATION:

This question satisfies the K/A statement by requiring the applicant to have detailed knowledge of the Loss of Feedwater Heating abnormal procedure and take actions to mitigate the Inadvertant Reactivity addition due to lower Feedwater temperatures.

The "A" distractor is plausible if the applicant reduces Reactor power >20% as allowed by the first part of the flowchart step and disregards the OR statement. The statement reads Use recirc flow to reduce reactor power > 20% RTP from pre-event power level OR to ≤ 65% RTP, whichever allows highest power. (76%-(>20%) = 55% RTP). The second part is plausible since it is correct.

The "B" distractor is plausible if the applicant reduces Reactor power >20% as allowed by the first part of the flowchart step and disregards the OR statement. The statement reads Use recirc flow to reduce reactor power > 20% RTP from pre-event power level OR to ≤ 65% RTP, whichever allows highest power. (76%-(>20%) = 55% RTP). The second part is plausible if the

applicant thinks that since the Final Feedwater temperature remains in the acceptable operating range of Feedwater Temperature vs. Core Power Map (Attachment 1) that 34SV-SUV-020 in not required. Final Feedwater temperature at 360°F is 20° below the Standard Feedwater temperature line.

The "D" distractor is plausible since the first part is correct. The second part is plausible if the applicant thinks that since the Final Feedwater temperature remains in the acceptable operating range of Feedwater Temperature vs. Core Power Map (Attachment 1) that 34SV-SUV-020 in not required. Final Feedwater temperature at 360°F is 20° below the Standard Feedwater temperature line.

A. **Incorrect** - See description above.

B. **Incorrect** - See description above.

C. **Correct** - See description above.

D. **Incorrect** - See description above.

References:
Attachment 1, 34AB-N21-1, Feedwater Temperature Vs Core Power Map

K/A:

295014 Inadvertent Reactivity Addition

G2.4.11 Knowledge of abnormal condition procedures.
(CFR: 41.10 / 43.5 / 45.13) 4.0 4.2

SRO only because of link to 10CFR55.43 (b)(5): Assessment and selection of procedures: Assessing plant conditions (normal, abnormal, or emergency) and selecting a procedure or section of a procedure to mitigate, recover, or with which to proceed.

LESSON PLAN/OBJECTIVE:

N22-MSRFW-LP-01501, Moisture Separator Reheaters and Feedwater Heaters, **Ver. 5.2**, EO 200.050.B.02

References used to develop this question:

34AB-N21-001-2, Loss of Feedwater Heating, **Ver 7.9**

88. 295024EA2.02 001/01301PC/200.032.A.01/MOD/P-EOP/SRO ONLY/295024EA2.02/1/1/H/3/JSC/ELJ

Unit 1 is operating at 100% RTP when a loss of Drywell Cooling occurs.

34AB-T47-001-1, Complete Loss of Drywell Cooling, is in progress.

At 12:00, the first Drywell temperature on Attachment 1, Peak Drywell Temperature, is exceeded.

At 12:15, the following Drywell conditions exist:

- o Drywell pressure is being manually controlled between 0.5 psig and 1.2 psig
- o Average Drywell temperature is 267°F, increasing 1°F/minute

Based on the above conditions,

IAW Unit 1 TS Bases, if a DBA LOCA were to occur with the Drywell conditions at 12:15, the resultant peak accident temperature _____ EXCEED the Drywell design temperature.

At 12:29, the reactor is REQUIRED to be shutdown IAW _____ .

A. ✓ will;
31EO-EOP-010-1, RC RPV Control (Non-ATWS) Point A

B. will;
34GO-OPS-014-1, Fast Reactor Shutdown

C. will NOT;
31EO-EOP-010-1, RC RPV Control (Non-ATWS) Point A

D. will NOT;
34GO-OPS-014-1, Fast Reactor Shutdown

Description:

Phil, this was question 8 of 10 of the previously submitted questions. Changes were incorporated based on your ES-401-9 comments.

34AB-T47-001-1 "Complete Loss of DW Cooling" contains a subsequent action that if any of the temperatures are exceeded in Attachment 1, then a 30 minute clock starts for restoring temperatures. If this time limit is exceeded, then a Fast Reactor Shutdown will be initiated per 34GO-OPS-014-1.

	-N001J -N001K	
Middle	1T47-N003 -N009	240°F
Lower	1T47-N001L -N001M -N004 -N005 -N007 -N008	200°F

IAW 31EO-EOP-012-1, Primary Containment Control:

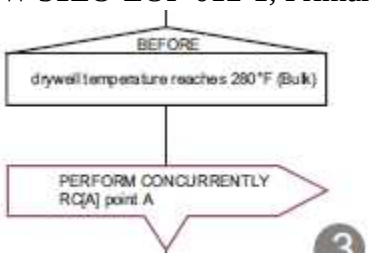

IAW Unit 1 TS B3.6.1.5 Drywell Air Temperature, In the event of a DBA, with an initial drywell average air temperature **less than or equal to** the LCO temperature limit, the resultant peak accident temperature **is** maintained **below** the drywell design temperature. As a result, the ability of primary containment to perform its design function **is ensured**.

SRO JUSTIFICATION:

The SRO must have detailed knowledge of TS Bases concerning Drywell temperature as to when the design temperature will be exceeded if a DBA were to occur. The SRO must also have detailed knowledge of abnormal procedures and the EOP PC flowchart to know when to shutdown the Unit based on the increasing pressure/temperature environment. The SRO must select which procedure will be directing the shutdown of the Unit. The RO may know that a unit shutdown is required but not which procedure is directing this action.

K/A JUSTIFICATION:

This question satisfies the K/A statement by requiring the applicant to know where the direction (procedure selection) is requiring the unit to be shutdown based upon interpreting high Drywell temperatures and pressures. Also satisfies the K/A statement by determining if a DBA were to occur with the higher Drywell temperatures, whether or not the resultant peak accident temperature will be maintained below the Drywell design temperature. This is TS Bases information.

The "B" distractor is plausible since the first part is correct. The second part is plausible if the applicant thinks that a Fast Reactor shutdown is required within 30 minutes and does not understand that a Reactor scram is required per the Primary Containment control flowchart prior to reaching 280°F. Even if the 30 minute time limit was exceeded, the EOP PC flowchart would take priority over the abnormal procedure requirements.

The "C" distractor is plausible if the applicant remembers a Drywell temperature limit of 340°F (Unit difference) and that an emergency depress is required prior to exceeding this design temperature and thinks there is sufficient margin that if a DBA were to occur, the resultant peak temperature will be maintained below the Drywell design temperature since it occurs less than the design temperature. Also plausible if the applicant does not consider that the bases for exceeding the design temperature begins with exceeding 150°F. The second part is plausible since it is correct.

The "D" distractor is plausible if the applicant remembers a Drywell temperature limit of 340°F (Unit difference) and that an emergency depress is required prior to exceeding this design temperature and thinks there is sufficient margin that if a DBA were to occur, the resultant peak temperature will be maintained below the Drywell design temperature since it occurs less than the design temperature. Also plausible if the applicant does not consider that the bases for exceeding the design temperature begins with exceeding 150°F. The second part is plausible if the applicant thinks that a Fast Reactor shutdown is required within 30 minutes and does not understand that a Reactor scram is required per the Primary Containment control flowchart prior to reaching 280°F. Even if the 30 minute time limit was exceeded, the EOP PC flowchart would take priority over the abnormal procedure requirements.

A. **Correct** - See description above.

B. **Incorrect** - See description above.

C. **Incorrect** - See description above.

D. **Incorrect** - See description above.

References:
NONE

K/A:

295024 High Drywell Pressure

EA2. Ability to determine and/or interpret the following as they apply to HIGH DRYWELL PRESSURE: (CFR: 41.10 / 43.5 / 45.13)

EA2.02 Drywell temperature 3.9 4.0

SRO only because of link to 10CFR55.43 (5): Assessment of facility conditions and selection of appropriate procedure, recalling the action in the body of procedure and when to take the action. Also SRO only because this is a detailed knowledge of when to implement attachments and appendices, including how to coordinate these items with procedure steps.

LESSON PLAN/OBJECTIVE:

T23-PC-LP-01301, Primary Containment, **Ver 7.1**, EO 200.032.A.01

References used to develop this question:

SRO ONLY Guideline
31EO-EOP-012-1, Primary Containment Control, (PC), **Ver. 6.0**
34AB-T47-001-1, Complete Loss of Drywell Cooling,**Ver. 2.3**

Original question from HLT question database used on 2009 HLT-5 NRC exam q#87

Which ONE of the choices below completes the following statement IAW 34AB-T47-001-2, Complete Loss of Drywell Cooling, Attachment 1, Peak Drywell Temperature?

The crew is required to enter _____ when any peak temperature listed in Attachment 1 has been exceeded for at least _____ .

A. 34AB-C71-001-2, Reactor Scram Procedure;
1 hour

B. 34AB-C71-001-2, Reactor Scram Procedure;
30 minutes

C. 34GO-OPS-014-2, Fast Reactor Shutdown;
1 hour

D.✓ 34GO-OPS-014-2, Fast Reactor Shutdown;
30 minutes

89. 295026EA2.01 001/20308RC/201.074.A12/BANK/P-EOP/SRO ONLY/295026EA2.01/1/1/H/3/ARB/ELJ

Unit 1 scrammed on low reactor water level due to a loss of the Condensate system.

Current plant conditions are:

- o Control rods ..... Fully inserted
- o Reactor Water Level ..... -135 inches and stable
- o RPV Pressure ..... 780 psig and stable
- o Torus Level ..... 120 inches and slowly increasing

Which ONE of the following choices answers both of these statements IAW 31EO-EOP-012-1, Primary Containment Control EOP Flowchart?

Of the listed temperatures and based on the above conditions, the LOWEST Torus Temperature at which the plant will be in the UNSAFE region of the Heat Capacity Temperature Limit is _____ .

With the plant in the UNSAFE region, the Shift Supervisor will order _____ .

Reference provided

A. 165°F;
a RPV pressure band that places the plant in the SAFE region of HCTL Graph, without exceeding the cooldown rate limit, IAW 31EO-EOP-010-1, RC RPV Control (NON-ATWS) RC/P path

B. 165°F;
an Emergency Depressurization of the RPV IAW 31EO-EOP-015-1, CP-1 Alternate Level Control, Steam Cooling, & Emergency RPV Depressurization

C. 180°F;
a RPV pressure band that places the plant in the SAFE region of HCTL Graph, without exceeding the cooldown rate limit, IAW 31EO-EOP-010-1, RC RPV Control (NON-ATWS) RC/P path

D. ✓ 180°F;
an Emergency Depressurization of the RPV IAW 31EO-EOP-015-1, CP-1 Alternate Level Control, Steam Cooling, & Emergency RPV Depressurization

Description:

The EOPs require maintaining in the Safe Area of the HCTL graph, but if the unsafe area is entered the reactor will be emergency depressurized. The HCTL graph requires plotting of 3 factors (RPV pressure, Torus level and Torus temperature).

Pressure reduction is allowed to prevent from entering the UNSAFE region, but once there, the plant is not allowed to restore to the SAFE region except by Emergency Depressurization. This is a confusion point with SRV Tail Pipe Level limit which allows reducing pressure to exit the UNSAFE into the SAFE region without performing an emergency depressurization.

The SRO must determine the lowest Torus temperature where the plant would be in the UNSAFE area of the HCTL graph. An important point being tested is whether to use the 600 psig line or the 800 psig. If the operator chooses the 600 psig line, they will miss the question. The applicant is given that the plant is in the UNSAFE area of the HCTL, therefore the SRO must know if RPV pressure can be reduced just enough to exit the unsafe region (SRV Tail Pipe Limit) or know that RPV pressure must be controlled via an emergency depress (HCTL).
The override wording on the PC Torus Temperature path is exactly the same as the override on the RC/P path.

SRO JUSTIFICATION:

The SRO must have detailed knowledge of the EOP RC/P and PC Torus temperature path Overrides and then based on the overrides/graph determine the correct RPV pressure control path. An RO may have knowledge of how to correctly plot the various points but not have the knowledge to interpret the plots and decide on the method of RPV pressure control.

K/A JUSTIFICATION:

This question satisfies the K/A statement by requiring the applicant to interpret Suppression pool water temperature and then determine the required EOP actions based on the value of Suppression pool water temperature.

The "A" distractor is plausible if the applicant uses the 600 psig RPV pressure line vice the conservative 800 psig RPV pressure line. The applicant has to choose which line to use since RPV pressure is 780 psig. The second part is plausible if the applicant remembers that the SRV Tail Pipe Level curve can be violated and that RPV pressure may be lowered irrespective of cooldown rates to re-enter the safe region of the SRVTPLL without having to ED. If the applicant thinks that the HCTL is like the SRVTPLL then this answer is plausible.

The "B" distractor is plausible if the applicant uses the 600 psig RPV pressure line vice the conservative 800 psig RPV pressure line. The applicant has to choose which line to use since RPV pressure is 780 psig. The second part is plausible since it is correct.

The "C" distractor is plausible since the first part is correct. The second part is plausible if the applicant remembers that the SRV Tail Pipe Level curve can be violated and that RPV pressure may be lowered irrespective of cooldown rates to re-enter the safe region of the SRVTPLL without having to ED. If the applicant thinks that the HCTL is like the SRVTPLL then this answer is plausible.

A. **Incorrect** - See description above.

B. **Incorrect** - See description above.

C. **Incorrect** - See description above.

D. **Correct** - See description above.

References:
U1 EOP Graph 2, Heat Capacity Temperature Limit

K/A:

295026 Suppression Pool High Water Temperature

EA2. Ability to determine and/or interpret the following as they apply to SUPPRESSION POOL HIGH WATER TEMPERATURE: (CFR: 41.10 / 43.5 / 45.13)

EA2.01 Suppression pool water temperature 4.1* 4.2*

SRO only because of link to 10CFR55.43(b)(5): Assessment of facility conditions and selection of appropriate procedure, recalling the action in the body of procedure and when to take the action.

LESSON PLAN/OBJECTIVE:

EOP-RC-LP-20308, RPV Control (NON-ATWS), **Ver. 2.0**, EO 201.074.A12

Reference(s) used to develop this question:

SRO ONLY Guideline
31EO-EOP-012-1, PC Primary Containment Control, **Ver. 6.0**
Unit 1 EOP Graph 2, Heat Capacity Temperature Limit

Bank Question which was used on 2011 Hatch NRC Exam 2011-301 Q#90

90. 295028EA2.05 001/20310PC/201.073.A.15/BANK/P-EOP/SRO ONLY/295028EA2.05/1/1/H/2/JSC/ELJ

Unit 1 has experienced a small LOCA and the following conditions currently exist:

- o RWL ..... 9 inches / stable
- o RPV pressure ..... 950 psig / stable

- o Torus level ..... 150 inches / stable
- o Torus pressure ..... 6.5 psig, rising 1.0 psig/minute

- o Drywell pressure ..... 8.0 psig, rising 1.0 psig/minute
- o Bulk Average Drywell temperature ... 275°F, rising 2°F/minute

IAW 31EO-EOP-012-1, PC chart, with the above conditions, which ONE of the choices below completes the following statements?

On the Drywell temperature path (DW/T), Torus Spray _____ REQUIRED to be placed into service PRIOR to spraying the Drywell.

Without additional operator actions and five (5) minutes later, the NEXT REQUIRED EOP action to be taken is to _____ .

Reference Provided

A. is;
spray the Drywell

B. is;
emergency depressurize the reactor

C. is NOT;
spray the Drywell

D. is NOT;
emergency depressurize the reactor

Description:

Torus Sprays **are not** ALWAYS REQUIRED to be placed into service PRIOR to spraying the Drywell. The PC-DW/T path does not require Torus sprays to be initiated prior to spraying the Drywell. 5 minutes later Torus pressure will be above the required 10 psig for the PC-DW/P path allowing the Drywell to be sprayed, however Drywell temperature will be above 280°F **requiring an emergency depress**. This number is 340°F on U2.

SRO JUSTIFICATION:

The SRO must have detailed administrative procedure knowledge of the EOPs and have the ability to recall from the body of the EOP the actions necessary to combat the parameter.

K/A JUSTIFICATION:

This question satisfies the K/A statement by requiring the applicant to know the relationship between high drywell temperature and torus pressure. The applicant must know the actions necessary to combat these situations and their priority.

The "A" distractor is plausible if the applicant only remembers the DW/P path, which initates Torus sprays always before DW sprays. The second part is plausible because this is a required action but it is not the next required action (Emergency Depress is the next action).

The "B" distractor is plausible if the applicant only remembers the DW/P path, which initates Torus sprays always before DW sprays. The second part is correct.

The "C" distractor is plausible since the first part is correct. The second part is plausible because this is a required action but it is not the next required action (Emergency Depress is the next action).

A. **Incorrect** - See description above.

B. **Incorrect** - See description above.

C. **Incorrect** - See description above.

D. **Correct** - See description above.

References:
U1 Graph 8 Drywell Spray Initiation Curve

K/A:

295028 High Drywell Temperature

EA2. Ability to determine and/or interpret the following as they apply to HIGH DRYWELL TEMPERATURE : (CFR: 41.10 / 43.5 / 45.13)

EA2.05 Torus/suppression chamber pressure: Plant-Specific 3.6 3.8

SRO only because of link to 10CFR55.43(b)(5): Assessment of facility conditions and selection of appropriate procedure, recalling the action in the body of procedure and when to take the action.

LESSON PLAN/OBJECTIVE:

EOP-PC-LP-20310, Primary Containment Control (PC), **Ver 3.0**, 201.073.A.15

References used to develop this question:

SRO ONLY Guideline
31EO-EOP-012-1, Primary Containment Control (PC), **Ver 6**
Unit 1 Graph 8, Drywell Spray Initiation Curve

Bank question used on HLT 7 Audit #89

91. 295035EA2.01 001/30005TS/300.006.A.18/NEW/TECH SPECS/SRO ONLY/295035EA2.01/1/2/H/3/ARB/ELJ

Unit 2 is operating at 100% RTP operating in TYPE "A" Containment with 2T41-C007A, Rx Bldg Vent Exhaust Fan, Danger Tagged out of service.

At 12:00, the following conditions exist:

- o RB INSIDE TO OUTSIDE AIR DIFF PRESS LOW, (654-001), alarm is received
- o 2T46-R604A, SEC CNMT DIFF PRESS A, indicates (+) 0.3 inches WC
- o 2T46-R604B, SEC CNMT DIFF PRESS B, indicates (+) 0.3 inches WC

At 12:10, investigation reveals 2T41-C007B, Rx Bldg Vent Exhaust Fan, has experienced a shaft failure.

At 12:15, Unit 2 Reactor Building Ventilation is secured and SBGT 2B is started.

Based on the above conditions,

Entry conditions have been met for _____ .

At 12:00, Secondary Containment Integrity _____ REQUIRED to be declared INOPERABLE immediately IAW TS Bases 3.6.4.1, Secondary Containment.

A. 34AB-T22-002-2, Loss Of Secondary Containment Integrity, ONLY;

was

B. 34AB-T22-002-2, Loss Of Secondary Containment Integrity, ONLY;

was NOT

C. 34AB-T22-002-2, Loss Of Secondary Containment Integrity, AND
31EO-EOP-014-2, SC Secondary Containment Control RR Radioactivity Release Control;

was

D. 34AB-T22-002-2, Loss Of Secondary Containment Integrity, AND
31EO-EOP-014-2, SC Secondary Containment Control RR Radioactivity Release Control;

was NOT

Description:

The entry conditions for 34AB-T22-002-2, Loss Of Secondary Containment Integrity, are:
1.1 ANNUNCIATORS
1.1.1 REFUELING FLOOR OUTSIDE AIR DIFF PRESS LOW, 657-001
1.1.2 **RB INSIDE TO OUTSIDE AIR DIFF PRESS LOW, 654-001**
1.2 Failure of the required SBGT subsystem when Secondary Containment is required.
1.3 Inability to secure closed an inoperable ventilation system isolation valve necessary to maintain secondary containment integrity.

1.4 Inability to maintained closed at least one door in each access opening to the Secondary Containment.
1.5 Visual observation of failure of the reactor building to remain intact.

The entry conditions for 31EO-EOP-014-2, SC/RR EOP flowchart are:

Differential pressure at or above 0 in. of water,
Area or HVAC exhaust radiation level above Table 6 Maximum Normal Operating Radiation Level
Area water level above Table 5 Maximum Normal Operating Water Level
Area ambient or differential temperature above Table 4 Maximum Normal Operating Temperature

With alarm **654-001 illuminated** and **differential pressure indicating (+) 0.3 inches WC**, **both** 34AB-T22-002-2 and 31EO-EOP-014-2 have entry conditions met.

The function of the secondary containment is to contain, dilute, and hold up fission products that may leak from primary containment following a Design Basis Accident (DBA). In conjunction with operation of the Standby Gas Treatment (SGT) System and closure of certain valves whose lines penetrate the secondary containment, the secondary containment is designed to reduce the activity level of the fission products prior to release to the environment and to isolate and contain fission products that are released during certain operations that take place inside primary containment, when primary containment is not required to be OPERABLE, or that take place outside primary containment.

To prevent ground level exfiltration while allowing the secondary containment to be designed as a conventional structure, the secondary containment requires support systems to maintain the control volume pressure at less than the external pressure. Requirements for these systems are specified separately in LCO 3.6.4.2, "Secondary Containment Isolation Valves (SCIVs)," and LCO 3.6.4.3, "Standby Gas Treatment (SGT) System."

For the secondary containment to be considered OPERABLE, it must have adequate leak tightness to ensure that the required vacuum (0.20 inch of vacuum) **can be established and maintained**. The secondary containment boundary required to be OPERABLE is dependent on the operating status of both units, as well as the configuration of doors, hatches, refueling floor plugs, SCIVs, and available flow paths to SGT Systems. The required boundary encompasses the zones which can be postulated to contain fission products from accidents required to be considered for the Condition of each unit, and furthermore, must include zones not isolated from the SGT subsystems being credited for meeting LCO 3.6.4.3.

Tech Spec Bases SR 3.6.4.1.3 and SR 3.6.4.1.4 states: The Unit 1 and Unit 2 SGT Systems exhaust the secondary containment atmosphere to the environment through appropriate treatment equipment. To ensure that all fission products are treated, SR 3.6.4.1.3 verifies that the appropriate SGT System(s) will rapidly establish and maintain a negative pressure in the secondary containment. This is confirmed by demonstrating that the required SGT subsystem(s) **will draw down** the secondary containment to **≥ 0.20 inch of vacuum water gauge in ≤120 seconds** (13 seconds of diesel generator startup and breaker closing time is included in the 120 second drawdown time). This cannot be accomplished if the secondary containment boundary is not intact. Secondary Containment will be inoperable and entry into the Required Action Statement will be required if Secondary Containment differential pressure cannot be established. In this case Secondary Containment is still operable.

SRO JUSTIFICATION:

The SRO must have detailed knowledge of Tech Spec Bases in order to fully answer this question correctly. ROs are NOT responsible for detailed Tech Spec Bases knowledge from memory and are above the RO knowledge level.

K/A JUSTIFICATION:

This question satisfies the K/A statement by requiring the applicant to interpret Secondary Containment Differential Pressure (DP), which is high (headed towards a positive value - less negative), and based on the Reactor Building and Refuel Floor DPs determine the operability of Secondary Containment.

The "A" distractor is plausible if the applicant remembers that 654-001 is an entry condition but does not consider entering 31EO-EOP-014-2 since there are NO actions on this EOP flowchart to address the higher than normal differential pressures, therefore only entering 34AB-T22-002-2. The second part is plausible if the applicant remembers the > 0.20 inch of vacuum water gauge requirement and since differential pressure is positive concludes that Secondary Contaiment is inoperable immediately at 12:00. If the support systems of Secondary Containment (SBGT & SCIVs) do not assist bringing the Secondary Contaiment pressure to the required value, then Secondary Containment will NOT be intact and is therefore inoperable.

The "B" distractor is plausible if the applicant remembers that 654-001 is an entry condition but does not consider entering 31EO-EOP-014-2 since there are NO actions on this EOP flowchart to address the higher than normal differential pressures, therefore only entering 34AB-T22-002-2. The second part is plausible since it is correct.

The "C" distractor is plausible since the first part is correct. The second part is plausible if the applicant remembers the > 0.20 inch of vacuum water gauge requirement and since differential pressure is positive concludes that Secondary Contaiment is inoperable immediately at 12:00. If the support systems of Secondary Containment (SBGT & SCIVs) do not assist bringing the Secondary Contaiment pressure to the required value, then Secondary Containment will NOT be intact and is therefore inoperable.

A. **Incorrect** - See description above.

B. **Incorrect** - See description above.

C. **Incorrect** - See description above.

D. **Correct** - See description above.

References:
NONE

K/A:

295035 Secondary Containment High Differential Pressure

EA2. Ability to determine and/or interpret the following as they apply to SECONDARY CONTAINMENT HIGH DIFFERENTIAL PRESSURE: (CFR: 41.8 to 41.10)

EA2.01 Secondary containment pressure: Plant-Specific 3.8 3.9

SRO only because of link to 10CFR55.43(b)(2): Facility operating limitations in the technical specifications and their bases.

LESSON PLAN/OBJECTIVE:

LT-LP-30005, Technical Specifications, **Ver. 8.0**, EO 300.006.A.18
T41-SC-LP-01302, Secondary Containment Systems, **Ver. 5.0**, EO 300.006.C.03

References used to develop this question:

SRO ONLY Guideline
34AB-T22-002-2, Loss of Secondary Containment Integrity, **Ver. 1.1**
31EO-EOP-014-2, SC / RR EOP flowchart; **Ver. 11.0**
34AR-654-001-2, RB Inside To Outside Air Diff Press Low, **Ver. 6.3**

92. 295038G2.4.8 001/20325SCRR/201.079.A.05/MOD/P-EOP/SRO ONLY/295038G2.4.8/1/1/H/3/JSC/ELJ

Unit 2 is operating at 50% RTP due to a fuel leaker. HPCI is DANGER Tagged out of service.

A Seismic Event causes a Group 1 Isolation and results in the following:

- o RWL is -135 inches and steady with RCIC
- o All Low Pressure ECCS systems are UNAVAILABLE

- o A steam leak occurs on the RCIC Exhaust Line in the Torus Area

- o LEAK DET AMBIENT TEMP HIGH (601-327) is alarming
- o RCIC ISOL TIMER INITIATED, (602-303) is alarming

- o Radiation levels in the Reactor Building cause Secondary Containment to ISOLATE

- o Offsite dose rate at the Site Boundary is 0.7 mr/hr TEDE

The following procedures are entered (not a complete list):

- o 34AB-T22-001-2, Primary Coolant System Pipe Break Reactor Building
- o 31EO-EOP-010-2, RC RPV Control (NON-ATWS)
- o 31EO-EOP-014-2, Secondary Containment Control/Radioactivity Release Control

Based on the above conditions and listed procedures,

The RCIC System High Area Temperature Isolation Signal _____ ALLOWED to be bypassed.

31EO-EOP-014-2, _____ ALLOW the Reactor Building Ventilation to be restarted .

A. is;
does

B. ✔ is;
does NOT

C. is NOT;
does

D. is NOT;
does NOT

Description:

Based on the initial conditions, RCIC is the only injection source available. Feed and condensate are not available due to the Group I signal. HPCI is tagged out of service. Low pressure ECCS systems are unavailable to inject. Since RWL is -135 inches and lowering, the Shift Supervisor will transition to CP-1 for Alternate Level Control. When RCIC develops a leak, it is allowed to remain in service by overriding the high area temperature isolation signal (31EO-EOP-100-2) per

Table 2 on RC and CP-1 flowcharts.

Isolate ALL systems discharging into area EXCEPT systems required to:
- assure adequate core cooling
- shut down reactor
- suppress fire
- maintain primary containment integrity

Table2A INJECTION SYSTEMS 4

- CRD per 34SO-C11-005-2
- RCIC, with suction from the condensate storage tank if available, per 34SO-E51-001-2. If necessary, defeat any or all of the following:
  - -high torus water level suction transfer logic per 31EO-EOP-100-2
  - -low reactor pressure isolation per 31EO-EOP-100-2
  - -high area temperature isolation per 31EO-EOP-100-2
- HPCI, with suction from the condensate storage tank if available, per 34SO-E41-001-2. If necessary, defeat one or both of the following:
  - -high torus water level suction transfer logic per 31EO-EOP-100-2
  - -high area temperature isolation per 31EO-EOP-100-2

Reactor Building HVAC systems cannot be restarted since high radiation conditions exist however it could be restarted for other conditions that include high Drywell pressure and low RWL.

IF Reactor Building HVAC isolates AND a Unit 1 or Unit 2 secondary containment radiation condition does NOT exist	THEN restart Reactor Building HVAC per 34SO-T41-005-2 If necessary defeat high drywell pressure AND low RWL isolation interlocks per 31EO-EOP-100-2

SRO JUSTIFICATION:

The SRO must have detailed administrative procedure knowledge of the 34AB-T22-001-2 and CP-1 procedures which will specify hierarchy, implementation, and/or coordination of plant normal, abnormal, and emergency procedures. This question asks the SRO to make a decision based on conflicts between the EOPs and 34AB-T22-001-2 (maintaining RCIC injecting into the core with a validated isolation signal). This question involves knowledge of administrative procedures that specific hierachy (EOPs vs Abnormal).

K/A JUSTIFICATION:

This question satisfies the K/A statement by requiring the applicant to know the effects that high offsite release rates will have on the decisions of the Shift Supervisor when abnormal procedures differ from the guidance of the EOPs in dealing with the high off site release rates.

The "A" distractor is plausible since the first part is correct. The second part is plausible since Reactor Building HVAC systems can be restarted for other conditions except high radiation conditions. These conditions include high Drywell pressure and low RWL.

The "C" distractor is plausible if RWL can be maintained to assure adequate core cooling via any other system. SC flowchart directs the action to isolate ALL systems discharging into area EXCEPT systems required to assure adequate core cooling. The second part is plausible since Reactor Building HVAC systems can be restarted for other conditions except high radiation

conditions. These conditions include high Drywell pressure and low RWL.

The "D" distractor is plausible if RWL can be maintained to assure adequate core cooling via any other system. SC flowchart directs the action to isolate ALL systems discharging into area EXCEPT systems required to assure adequate core cooling. The second part is plausible since it is correct.

A. **Incorrect** - See description above.

B. **Correct** - See description above.

C. **Incorrect** - See description above.

D. **Incorrect** - See description above.

References:
NONE

K/A:

295038 High Off-Site Release Rate

G2.4.8 Knowledge of how abnormal operating procedures are used in conjunction with EOPs. (CFR: 41.10 / 43.5 / 45.13) 3.8 4.5

SRO only because of link to 10CFR55.43 (b)(5): Assessment of facility conditions and selection of appropriate procedures during normal, abnormal, and emergency situations; Knowledge of diagnostic steps and decision points n the emergency operating proedures (EOP) that involve transitions to event specific sub-procedures or emergency contingency procedures. Knowledge of administrative procedures that specify hierarchy, implementation, and/or coordination of plant normal, abnormal, and emergency procedures.

LESSON PLAN/OBJECTIVE:

EOP-SCRR-LP-20325, Secondary Containment, Radioactivity Release Control, **Ver 2.1**, EO 201.079.A.05, 201.081.A.01, 201.081.B.01

References used to develop this question:

SRO ONLY Guideline
31EO-EOP-014-2, SC-Secondary Containment, RR-Radioactivity Release Control, **Ver 11**
31EO-EOP-015-2, Alternate Level Control, Steam Cooling & Emergency RPV Depressurization, **Ver 8**
34AB-T22-001-2, Primary Coolant System Pipe Break Reactor Building, **Ver 0.5**

Modified from HLT Database Q#295023G2.4.45-001

Original Question

Unit 2 is in day 5 of a Refueling outage with fuel movement in progress.

A Refueling accident occurs resulting in the following alarms being received and confirmed to be valid on ALL associated monitors:

- o U1 (603-225-1), Rx Bldg Stack Radn Mon High
- o U1 (601-409-1), Refueling Floor Vent Exhaust Radiation High

- o U2 (603-223-2), Rx Bldg Vent Exhaust Radiation High
- o U2 (601-409-2), Refueling Floor Vent Exhaust Radiation High
- o U2 (601-403-2), Refueling Floor Vent Exhaust Radiation Hi-Hi

Unit 1 Reactor Building Ventilation Systems _____ have isolated.

IAW 31EO-EOP-014-2, SC/RR, the **Unit 2** Reactor Building Ventilation System _____ to be restarted if it has shutdown and isolated.

A. should;
is allowed

B. should NOT;
is allowed

C.✓ should;
is NOT allowed

D. should NOT;
is NOT allowed

93. 600000G2.4.47 001/03601X43/036.013.A.01/NEW/P-AB/SRO ONLY/600000G2.4.47/1/1/H/3/ARB/ELJ

Unit 2 is operating at 100% RTP with the Station Service Air Compressor (SSAC) 2A tagged out.

At 10:00, a fire is reported coming from the SSAC area.

- o Heavy black smoke is obscuring the source of the fire
- o ALL SSACs are placed to Pull-To-Lock "OFF" position

The following procedures have been entered:

- o 34AB-P51-001-2, Loss Of Instrument And Service Air System Or Water Intrusion Into The Service Air System
- o 34AB-X43-001-2, Fire Procedure

At 10:20, a Notification Of Unusual Event (NOUE) Emergency is declared.

With the above conditions,

The SS will direct an operator to Isolate the Fire Protection Sprinklers IAW _____ .

The Emergency Classification declaration time _____ meet the requirements of NMP-EP-110, Emergency Classification Determination and Initial Action.

A. 34AB-P51-001-2;
does

B✔ 34AB-P51-001-2;
does NOT

C. 34AB-X43-001-2;
does

D. 34AB-X43-001-2;
does NOT

Description:

Phil, this was question 9 of 10 of the previously submitted questions. Changes were incorporated based on your ES-401-9 comments.

34AB-P51-001-2, Loss of Instrument and Service Air System or Water Intrusion into the Service Air System, step 4.6 states the following:

> 4.6 Isolate the Fire Protection Sprinklers listed on Attachment 1, IF NO fire exists in their protection areas.

The steps to isolate the sprinklers are necessary to prevent complicating the recovery actions during a loss of Air.

IAW NMP-EP-110-GL02, Figure 2, HU2 - FIRE within PROTECTED AREA boundary NOT Extinguished within 15 Minutes of Detection is the classification that will be declared. An NOUE is declared due to the fire duration lasting longer than 15 minutes within the protected area. Note 2 requires the ED to not wait until the 15 minutes has elapsed before declaring if the duration will likely exceed the 15 minute limit. The heavy black obscuring the location is enough information to know to state that the crew does not know if the fire is still burning or has been extinguished.

HU2 - FIRE Within PROTECTED AREA Boundary **NOT** Extinguished Within 15 Minutes of Detection
(Pg. 107)

1. FIRE in buildings or areas contiguous to any of the following areas **NOT** extinguished within 15 minutes of control room notification or control room alarm unless disproved by personnel observation within 15 minutes of the alarm:

Primary Containment	Reactor Building
Diesel Generator Building	Control Building
Intake Structure	

Note 2

The Emergency Director should not wait until 15 minutes has elapsed, but should declare the event as soon as it is determined that the duration has or will likely exceed 15 minutes.

SRO JUSTIFICATION:

The SRO must have detailed procedure knowledge of NMP-EP-110-GL02, HNP EALs - ICs, Threshold Values and Basis, and recoginition of the specific plant conditions to classify the appropriate emergency. Declaration of the emergency within prescribed time restraints per notes in the procedure are above the RO knowledge level. Declaration of an emergency is above the RO knowledge level.

K/A JUSTIFICATION:

This question satisfies the K/A statement by requiring the applicant to diagnose/recognize an emergency classification due to a fire in the Protected Area within a TIMELY manner. The classification is complicated due to the added Notes on the EAL charts which states the ED should not wait until the 15 minutes has elapsed to make the correct Notifications.

The "A" distractor is plausible since the first part is correct. The second part is plausible since most classifications are not within time constraints and regulated by attached notes therefore the ED has up to 15 minutes to declare an Emergency after conditions are met. The declaration for this question was made well within the normal 15 minute time limit however Note 2 applies for this Fire.

The "C" distractor is plausible because there are steps in an abnormal procedure (34AB-X43-002-0) which isolate the deluge headers; this makes 34AB-X43-001-2 plausible. The second part is plausible since most classifications are not within time constraints and regulated by attached notes therefore the ED has up to 15 minutes to declare an Emergency after conditions are met. The declaration for this question was made well within the normal 15 minute time limit however Note 2 applies for this Fire.

The "D" distractor is plausible because there are steps in an abnormal procedure (34AB-X43-002-0) which isolate the deluge headers; this makes 34AB-X43-001-2 plausible. The second part is is plausible since it is correct.

A. **Incorrect** - See description above.

B. **Correct** - See description above.

C. **Incorrect** - See description above.

D. **Incorrect** - See description above.

References:
NONE

K/A:

600000 Plant Fire On Site

G2.4.47 Ability to diagnose and recognize trends in an accurate and timely manner utilizing the appropriate control room reference material.
(CFR: 41.10 / 43.5 / 45.12) 4.2 4.2

SRO only because of link to 10CFR55.43(b)(5): Assessment of facility conditions and selection of appropriate procedure, recalling the action in the body of procedure and when to take the action.

LESSON PLAN/OBJECTIVE:

X43-FPS-LP-03601, Fire Protection, **Ver. 5.0**, EO 036.013.A.01
EP-LP-20101, Initial/Terminating Activities,**Ver. 4.1**, EO 001.017.A.01

Reference(s) used to develop this question:

SRO ONLY Guideline
34AB-P51-001-2, Loss Of Instrument And Service Air System Or Water Intrusion Into The Service Air System, **Ver. 4.9**
34AB-X43-002-0, Fire Protection System Failures, **Ver 3.1**
NMP-EP-110-GL02, HNP EALs - ICs, Threshold Values and Basis, Figure 2, **Ver. 3.0**

94. G2.1.39 001/20201AB/LT20201.019/MOD/P-AB/SRO ONLY/G2.1.39/3/H/3/ARB/ELJ

Security has just notified the Main Control Room that armed intruders have just penetrated the Protected Area and are headed towards the Service Building.

- o Both Units are manually scrammed
- o An Emergency has been declared IAW NMP-EP-110, Emergency Classification Determination

IAW 34AB-Y22-004-0, Credible Imminent Threat Of Attack On The Plant, and based on the above conditions,

A page announcement will be made to direct all TSC Emergency Responders to _____ .

An aggressive cooldown of greater than 100°F/hr _____ REQUIRED to be initiated.

A. report to their Emergency Response Facility immediately;
is

B. report to their Emergency Response Facility immediately;
is NOT

C. cease all activities and take cover in their immediate vicinity;
is

D. ✓ cease all activities and take cover in their immediate vicinity;
is NOT

Description:

Phil, this was question 10 of 10 of the previously submitted questions. Changes were incorporated based on your ES-401-9 comments.

IAW 34AB-Y22-004-0, Credible Imminent Threat Of Attack On The Plant, step 4.5 requires the crew to enter the section (4.7) and make an announcement for all personnel to cease all activities and take cover in your immediate vicinity. This is due to the threat being an "Immeditate Security Threat" (in progress). The caution at this step states the Emergency Response Facilities will not be activated during the performance of the next step (4.7.1) unless the Emergency Director can ensure the nature and proximity of the threat poses no threat to facility activation and/or function. With armed intruders headed to the Service Building, the Emergency Director can not ensure facility activation will not pose a threat. Step 4.7.11 requires an aggressive cooldown on both units to be initiated.

SRO JUSTIFICATION:

The SRO must have detailed knowledge of this procedure which involves three different sections to evaluate and then remember an applicable "Caution" to obtain the correct answer.

K/A JUSTIFICATION:

This question satisfies the K/A statement by requiring the applicant to know the conservative actions displayed in this abnormal procedure. With intruders headed toward the Service Building, which houses the Operations Support Center and accesses the Technical Support Center (TSC), the conservative action would be to NOT assemble Emergency Responders in the TSC, hence the reason this abnormal procedure provides this conservative action. If the applicant does not remember the actual procedure step, then based on the conditions, will make the conservative decision.

The "A" distractor is plausible if the applicant does not remember the section on an "Immediate" threat and remembers only the "Informational Security Threat" section which requires the TSC responders to report to their response facility. The second part if the applicant if the applicant thinks that there is a need to remove as much energy from the plant as soon as possible for the given threat. There are multiple cases in the EOPs where reducing RPV pressure is allowed irrespective of cooldown rate to include performing an emergency depressurization.

The "B" distractor is plausible if the applicant does not remember the section on an "Immediate" threat and remembers only the "Informational Security Threat" section which requires the TSC responders to report to their response facility. The second part is plausible since it is correct.

The "C" distractor is plausible since the first part is correct. The second part if the applicant if the applicant thinks that there is a need to remove as much energy from the plant as soon as possible for the given threat. There are multiple cases in the EOPs where reducing RPV pressure is allowed irrespective of cooldown rate to include performing an emergency depressurization.

A. **Incorrect -** See description above.

B. **Incorrect -** See description above.

C. **Incorrect -** See description above.

D. **Correct -** See description above.

References:
NONE

K/A:

2.1 Conduct of Operations

G2.1.39 Knowledge of conservative decision making practices.
(CFR: 41.10 / 43.5 / 45.12) 3.6 4.3

SRO only because of link to 10CFR55.43(b)(5): Assessment of facility conditions and selection of appropriate procedure, recalling the action in the body of procedure and when to take the action.

LESSON PLAN/OBJECTIVE:

LT-LP-20201, Introduction To Abnormal Procedures, LT-20201.019

Reference(s) used to develop this question:

SRO ONLY Guideline
34AB-Y22-004-0, Credible Imminent Threat Of Attack On The Plant, **Ver. 6.1**

Modified question which was used on the 2011-301 HLT-6 NRC Exam, Question #99

Original Question

Security has just notified the control room that armed intruders have just penetrated the Protected Area and are headed towards the Service Building.

- Both Units are manually scrammed
- An Emergency has been declared IAW NMP-EP-110, Emergency Classification Determination

IAW 34AB-Y22-004-0, Credible Imminent Threat Of Attack On The Plant, which ONE of the following completes both statements?

A page announcement will be made to direct all TSC Emergency Responders to _____ .

An aggressive cooldown (60°F/hr to 100°F/hr) _____ required to be initiated.

A. report to their Emergency Response Facility immediately;
is

B. report to their Emergency Response Facility immediately;
is NOT

C. cease all activities and take cover in their immediate vicinity;
is NOT

D. ✓ cease all activities and take cover in their immediate vicinity;
is

95. G2.2.14 001/00501E41/300.006.A.13/NEW/P-NORM/SRO ONLY/G2.2.14/3/H/3/ARB/ELJ

Unit 2 is operating at 100% RTP with the following conditions:

- o HPCI Pump Operability has just been completed
- o RHR B Loop is operating in Torus Cooling Mode

Subsequently, a NPO is performing 34SV-SUV-018-2, ECCS Status Checks, and reports to the Shift Supervisor the following Off-Normal valve positions:

o 2E11-F028B, Torus Spray or Test Vlv,	OPEN
o 2E11-F024B, Full Flow Test Line Vlv,	OPEN
o 2E11-F048B, Hx Bypass Vlv,	CLOSED
o 2E41-F008, Test To CST Vlv,	OPEN
o 2E41-F011, Test To CST Vlv,	OPEN

- o ALL other valves were in the Operable (Normal) position

With the above valve positions, _____ considered INOPERABLE.

The procedure steps that return the valves to their required position are contained in _____ .

A. ONLY One (1) ECCS Injection System is;
34SV-SUV-018-2, ECCS Status Checks

B.✔ ONLY One (1) ECCS Injection System is;
the associated system operating procedure

C. TWO (2) ECCS Injection Systems are;
34SV-SUV-018-2, ECCS Status Checks

D. TWO (2) ECCS Injection Systems are;
the associated system operating procedure

Description:

IAW 34SV-SUV-018-2, Step 7.3.2.1 which states "WHEN a Loop of RHR is required to be operable, each Residual Heat Removal System Valve in the LPCI or Suppression Pool Cooling or Suppression Pool Spray or Drywell Spray flow path, that is NOT locked, sealed OR otherwise secured in position, is in the **correct position listed in Tables 3 and 4(5)** OR the Shift Supervisor had determined from other plant requirements, e.g., **Shutdown Cooling** required, that the Loop is operable." With RHR in Torus Cooling, RHR is still operable for LPCI.

Step 7.3.2.3, which states "WHEN HPCI is required to be operable, each HPCI System Valve in the flow path, that is NOT locked, sealed OR otherwise secured in position, is in the **correct position listed in Table 6**, unless the Shift Supervisor had determined from other plant requirements, HPCI aligned to Torus, that HPCI is operable." Table 6 requires 2E41-F008 & 2E41-F011 to be in the CLOSED positiion.

IAW 34SV-E41-002-2, HPCI Pump Operability, step 7.2.9 states "Notify the Shift Supervisor to declare HPCI INOP AND place it under an RAS." HPCI is declared inop when the 2E41-F008 is open due to its stroke time. Therefore, with 2E41-F008 & F011 open, HPCI is inoperable.

All of the above mentioned valves will reposition to there required positions on receipt of an initiation signal.

SRO JUSTIFICATION:

The SRO must have detailed procedure knowledge of 34SV-SUV-018 and 34SV-E41-002 to determine if the ECCS systems are inoperable based on the positions of the associated valves. The RO will know to report the valve positions to the SRO but the SRO will have the knowledge to decide whether or not the ECCS system is operable.

K/A JUSTIFICATION:

This question satisfies the K/A statement by requiring the applicant to know the status of ECCS systems (operable verses inoperable) based strictly on valve positions and the governing document to control/reposition the valves (process) and return the ECCS system to an operable status.

The "A" distractor is plausible since the first part is correct. The second part is plausible if the applicant remembers that 34SV-SUV-018-2 lists all of the ECCS required positions and thinks this procedure will also allow the repositioning of the associated valves to the operable (normal) position.

The "C" distractor is plausible if the applicant remembers that some ECCS systems are inoperable when certain valves are not in their operable (normal) position and believes with 2E11-F048B, RHR Heat Exchanger Bypass valve closed and 2E41-F008 &F011,Test To CST Vlvs, open, that both HPCI & RHR Loop B are inoperable. The second part is plausible if the applicant remembers that 34SV-SUV-018-2 lists all of the ECCS required positions and thinks this procedure will also allow the repositioning of the associated valves to the operable (normal) position.

The "D" distractor is plausible if the applicant remembers that some ECCS systems are inoperable when certain valves are not in their operable (normal) position and believes with 2E11-F048B, RHR Heat Exchanger Bypass valve closed and 2E41-F008 &F011,Test To CST Vlvs, open, that both HPCI & RHR Loop B are inoperable. The second part is plausible since it is correct.

A. **Incorrect** - See description above.

B. **Correct** - See description above.

C. **Incorrect** - See description above.

D. **Incorrect** - See description above.

References:
NONE

K/A:

2.2 Equipment Control

G2.2.14 Knowledge of the process for controlling equipment configuration or status. (CFR: 41.10 / 43.3 / 45.13) 3.9 4.3

SRO only because of link to 10CFR55.43(b)(5): Assessment of facility conditions and selection of appropriate procedure, recalling the action in the body of procedure and when to take the action.

LESSON PLAN/OBJECTIVE:

E41-HPCI-LP-00501, High Pressure Coolant Injection (HPCI), **Ver. 6.0**, EO 300.006.A.13
E11-RHR-LP-00701, Residual Heat Removal System, **Ver. 9.1**, EO 300.006.A.34
LT-LP-30005, Technical Specifications, **Ver. 10.1**, EO 300.010.A.06

References used to develop this question:

SRO ONLY Guideline
34SV-SUV-018-2, ECCS Status Checks, **Ver. 6.9**
34SV-E41-002-2, HPCI Pump Operability, **Ver. 36.1**

96. G2.2.25 001/02702R22/300.006.A.10/MOD/TECH SPECS/SRO ONLY/G2.2.25/3/H/2/JSC/ELJ

Unit 2 is operating at 100% RTP when the following occurs:

- o The 30 amp DC breaker for ACB 135574, 4160V Bus "2F" Normal Supply breaker TRIPS
- o The 30 amp DC breaker CANNOT be closed
- o 4160V Bus "2F" is on Alternate Supply

With the above conditions;

IAW TS Bases 3.8.1, AC Sources - Operating, entry into a TS Required Action Statement (RAS) _____ REQUIRED.

If the Main Generator trips, the MAXIMUM number of Station Service Buses that will be energized is _____ .

A✓ is;
zero (0)

B. is;
two (2)

C. is NOT;
zero (0)

D. is NOT;
two (2)

Description:

Tech Spec Section 3.8.1, AC Sources - Operating

TS 3.8.1 requires two qualified circuits between the offsite transmission network and the Unit's on-site Class 1E Electrical Power Distribution System (4160 VAC Bus E, F & G). This includes the feeder breakers to the ESF bus even though the Weekly Breaker Alignment Check surveillance does not trace the circuit that far.

The Bases for 3.8.1 states that the <u>4160 VAC "F" bus requires both feeder breakers to be operable</u> while only one breaker to 4160 VAC "E" & "G" buses are required, provided each bus is supplied from a different SAT.

Upon a loss of the Normal Power source to 4160 VAC busses A, B, C and D, the *normal* supply breakers will automatically open and the *alternate* supply breakers will automatically close when both generators output PCBs are opened. This is known as a FAST TRANSFER. This operation normally occurs following a manual or auto turbine trip. It ensures that all loads remain energized. There are several conditions in the electrical distribution system which will lockout (prevent) a fast transfer. Those conditions are as follows:

If the fast transfer does not occur within 0.2 seconds, the automatic fast transfer is locked out, requiring a manual transfer to re-energize the 4160 VAC Station Service Busses 2A, B,

C, & D.
If any of the 4160 VAC Emergency Busses are tied to the 2C SAT (Alternate), a fast transfer of house loads is prohibited and the SAT supply breakers to 4160 2A and B receive a trip signal.

When the Main Turbine trips, the Fast transfer will not occur, therefore leaving all Station Service buses de-energized. Manual transfer to SAT 2D is allowed for the 4160 VAC Busses 2C and 2D only, and is required if the generator is no longer available.

SRO JUSTIFICATION:

The SRO must have detailed administrative procedure knowledge of Facility operating limitations in the TS and their bases.

K/A JUSTIFICATION:

This question satisfies the K/A statement by requiring the applicant to understand the differences between the 4160 emergency buses TS requirements as annotated in the bases document.

The "B" distractor is plausible since the first part is correct. The second part is plausible if the applicant thinks that only 2 buses did not Fast transfer and that Station Service Bus 2C & 2D will be manually re-energized from SAT 2D.

The "C" distractor is plausible if the applicant thinks about the bases for either 4160 2E or 2G. Only one of the feeder breakers for these two buses are required to be operable if 4160 2E and 2F are being powered from different SATs. The second part is plausible since it is correct.

The "D" distractor is plausible if the applicant thinks about the bases for either 4160 2E or 2G. Only one of the feeder breakers for these two buses are required to be operable if 4160 2E and 2F are being powered from different SATs. The second part is plausible if the applicant thinks that only 2 buses did not Fast transfer and that Station Service Bus 2C & 2D will be manually re-energized from SAT 2D.

A. **Correct** - See description above.

B. **Incorrect** - See description above.

C. **Incorrect** - See description above.

D. **Incorrect** - See description above.

References:
NONE

K/A:

2.2 Equipment Control

G2.2.25 Knowledge of the bases in Technical Specifications for limiting conditions for operations and safety limits. (CFR: 41.5 / 41.7 / 43.2) 3.2 4.2

SRO only because of link to 10CFR55.43 (b)(2):Facility operating limitations in the TS and their bases.

LESSON PLAN/OBJECTIVE:

R22-ELECT-LP-02702, 4160 VAC Electrical Distribution, **Ver 6.1**, EO 300.006.A.10

References used to develop this question:

SRO ONLY Guideline
Unit 2 TS and Bases
34SO-R22-001-2, 4160 VAC System, **Ver 21.0**

Original Question HLT-8 NRC exam q#84

Unit 2 is operating at 100% power with the following electrical lineup:

- The 30 amp DC breaker tripped for ACB 135554, 4160V Bus "2E" Normal Supply breaker
- The 30 amp DC breaker CANNOT be closed
- 4160V Bus "2E" is on Alternate Supply from SAT 2C

- 4160V Bus "2F" is on Normal Supply from SAT 2D
- 4160V Bus "2G" is on Normal Supply from SAT 2D

With the above conditions;

IAW TS Bases 3.8.1, "AC Sources - Operating", entry into a TS Required Action Statement (RAS) _____ REQUIRED.

ACB 135554 breaker _____ have a trip signal due to the loss of the 30 amp DC breaker.

A. ✓ is NOT;
will NOT

B. is NOT;
will

C. is;
will NOT

D. is;
will,

Original Question HLT-6 NRC exam q#28

Unit 2 is operating at 50% RTP with 4160 VAC 2E, 2R22-S005, powered from Startup Auxilary Transformer (SAT) 2C.

Subsequently, the Unit 2 Main Turbine trips.

Which ONE of the following completes the statements concerning the Station Service Buses?

After the Main Generator trips, the MAXIMUM number of Station Service Buses that will be energized is _____ .

At this time, 34SO-R22-001-2, 4160V AC System Operation, can be used to MANUALLY re-energize 4160V Buses _____ .

A. ✓ zero (0);
2C and 2D
B. zero (0);
2A and 2B
C. two (2);
2C and 2D
D. two (2);
2A and 2B

97. G2.3.12 001/01301PC/300.010.A.12/MOD/TECH SPECS/SRO ONLY/G2.3.12/3/H/3/ARB/ELJ

Unit 1 is in Hot Shutdown Mode to inspect the Drywell for leakage.

Upon Drywell entry, it is identified that the INNER airlock door seal is no longer intact.

A Required Action Statement (RAS) is written for the INNER airlock door.

- o The OUTER airlock door has been verified to be locked closed

IAW Tech Spec 3.6.1.2, Primary Containment Airlock,

While Maintenance is actively repairing the INNER Airlock door,
the OUTER Airlock door _____ .

To comply with subsequent Tech Spec verification requirements that the OUTER Airlock door is still locked closed, Tech Specs _____ ALLOW the verification to be accomplished by administrative controls (i.e. without entering the Drywell Access).

A. CAN be left open while Maintenance workers are in the airlock;
does

B. CAN be left open while Maintenance workers are in the airlock;
does NOT

C. ✔ MUST be immediately closed after each entry and exit;
does

D. MUST be immediately closed after each entry and exit;
does NOT

Description:

TS 3.6.1.2 Condition A.1, requires the outer airlock door closed within one hour and locked within 24 hours. TS Bases B3.6.1.2 Actions, states, The ACTIONS are modified by Note 1, which allows entry and exit to perform repairs of the affected air lock component. If the outer door is inoperable, then it may be easily accessed to repair. If the inner door is the one that is inoperable, however, then a short time exists when the containment boundary is not intact (during access through the outer door). The allowance to open the OPERABLE door, even if it means the primary containment boundary is temporarily not intact, is acceptable due to the low probability of an event that could pressurize the primary containment during the short time in which the OPERABLE door is expected to be open. The OPERABLE door must be ***immediately closed after each entry and exit***. While Maintenance is actively repairing the INNER Airlock door, the OUTER Airlock door can NOT be left open.

Required Action A.3 ensures that the air lock with an inoperable door has been isolated by the use of a locked closed OPERABLE air lock door. This ensures that an acceptable primary containment leakage boundary is maintained. The Completion Time of once per 31 days isbased on engineering judgment and is considered adequate in view of the low likelihood of a locked door being mispositioned and other administrative controls. Required Action A.3 is modified by

a Note that applies to air lock doors located in high radiation areas or areas with limited access due to inerting and allows these doors to be verified locked closed by use of administrative controls. Allowing verification by administrative controls is considered acceptable, since access to these areas is typically restricted. Therefore, the probability of misalignment of the door, once it has been verified to be in the proper position, is small.

SRO JUSTIFICATION:

The SRO must have detailed knowledge of TS Bases concerning the inoperable Airlock door and must properly apply 31GO-OPS-006-0, Conditions, Required Actions, And Completion Times, and TS 3.0.2, to answer this question. This is above the RO knowledge level.

K/A JUSTIFICATION:

This question satisfies the K/A statement by requiring the applicant to have knowledge of how to control the containment airlock doors during containment entry to protect personnel from the radiological hazards located beyond the containment airlock doors.

The "A" distractor is plausible if the applicant does not remember the TS Bases requirement for only allowing the operable door to be opened then closed after each entry/exit. Also plausible since leaving the outer door open could be considered a safety requirement for preventing personnel from getting trapped in the airlock. The second part is plausible since it is correct.

The "B" distractor is plausible if the applicant does not remember the TS Bases requirement for only allowing the operable door to be opened then closed after each entry/exit. Also plausible since leaving the outer door open could be considered a safety requirement for preventing personnel from getting trapped in the airlock. The second part is plausible if the applicant does not apply the note above the requirement for the door to be checked every 31 days. There are multiple instances in TS that do not have the same note for this type of check.

The "D" distractor is plausible since the first part is correct. The second part is plausible if the applicant does not apply the note above the requirement for the door to be checked every 31 days. There are multiple instances in TS that do not have the same note for this type of check.

A. **Incorrect** - See description above.

B. **Incorrect** - See description above.

C. **Correct** - See description above.

D. **Incorrect** - See description above.

References:
NONE

K/A:

2.3 Radiation Control

G2.3.12 Knowledge of radiological safety principles pertaining to licensed operator duties, such as containment entry requirements, fuel handling responsibilities, access to locked high-radiation areas, aligning filters, etc.
(CFR: 41.12 / 45.9 / 45.10) 3.2 3.7

SRO only because of link to 10CFR55.43(b)(2): Facility operating limitations in the technical specifications and their bases.

LESSON PLAN/OBJECTIVE:

T23-PC-LP-01301, Primary Containment, **Ver. 7.2**, EO 300.010.A.12

Reference(s) used to develop this question:

SRO ONLY Guideline
U1 Technical Specifications 3.6.1.2, Primary Containment Airlock, **Amendment 195**
U1 Technical Specifications Bases B3.6.1.2, **Rev. 0.0**

Origianl question used on 2009 Hatch NRC Exam 2009-301 Q#97

ORIGINAL QUESTION

Unit 1 is in Hot Shutdown Mode to inspect the Drywell for leakage. Upon Drywell entry, it is identified that the INNER airlock door seal is no longer intact. A Required Action Statement (RAS) is written for the INNER airlock door.

IAW Tech Spec 3.6.1.2, "Primary Containment Airlock," which ONE of the following completes both statements?

While Maintenance is actively repairing the INNER Airlock door,
the OUTER Airlock door _____ .

If Unit 1 enters Cold Shutdown Mode, during repair activities,
the INNER Airlock door RAS _____ .

A. MUST be immediately closed after each entry and exit;
MUST remain active

B. CAN be left open while Maintenance workers are in the airlock;
MUST remain active

C.✓ MUST be immediately closed after each entry and exit;
CAN be replaced with a Tracking RAS

D. CAN be left open while Maintenance workers are in the airlock;

CAN be replaced with a Tracking RAS

98. G2.3.15 001/05101D11/300.006.C.02/BANK/TECH SPEC/SRO ONLY/G2.3.15/3/H/2/JSC/ELJ

Unit 2 is operating at 85% RTP when an event occurs requiring the Drywell to be vented using 2T48-F319 and 2T48-F320, Drywell Vent valves.

- o Drywell pressure is being maintained between 0.5 psig and 1.0 psig.

Concerning 2T48-F319 and 2T48-F320 and the 2D11-K621A & B, Drywell Radiation Monitors,

If 2D11-K621A & B, Drywell Radiation Monitors increase to 145 R/hr, 2T48-F319 and 2T48-F320 will _____ .

IAW TS Bases 3.3.6.1, the Drywell Radiation - High function, _____ .

A. ✔ close;
is NOT assumed in the U2 FSAR accident or transient analysis because the MSIV leakage path is MORE limiting

B. close;
is assumed in the U2 FSAR accident or transient analysis because the MSIV leakage path is LESS limiting

C. remain open;
is NOT assumed in the U2 FSAR accident or transient analysis because the MSIV leakage path is MORE limiting

D. remain open;
is assumed in the U2 FSAR accident or transient analysis because the MSIV leakage path is LESS limiting

Description:

Two Drywell channel monitors (2D11-K621A & B, Drywell Radiation Monitors) have a range of 1 to 107 R/hr and provide alarms, indication, and isolations. At 138 R/hr in the drywell, all the primary containment 18" purge and vent valves close. The valves are; Drywell purge, T48-F307 and F308; Torus purge, T48-F309 and F324; Drywell vent, T48-F319 and F320; and Torus vent T48-F318 and F326. If the valves are closed on a High Radiation signal, then an amber light above the valve indicator on H11-P602 will illuminate to tell the operator that the valves closed, or would have closed, on high radiation in the drywell.
IAW TS Bases 3.3.6.1, High drywell radiation indicates possible gross failure of the fuel cladding. Therefore, when Drywell Radiation - High is detected, an isolation is initiated to limit the release of fission products. However, this Function is not assumed in any accident or transient analysis in the FSAR because other leakage paths (e.g., MSIVs) are more limiting.

SRO JUSTIFICATION:

The SRO must have detailed administrative procedure knowledge Tech Spec bases concerning DW radiation monitors to answer this question. This knowledge is above the required RO knowledge.

K/A JUSTIFICATION:

This question satisfies the K/A statement by requiring the applicant to know the effects that the Drywell Radiation Monitors have on the ability to fast vent the DW during conditions that exhibit high radiation levels.

The "B" distractor is plausible since the first part is correct. The second part is plausible if the applicant thinks Drywell radiation high would be assumed in the analysis just because Drywell radiation has such a high range of indication.

The "C" distractor is plausible if the applicant does not remember the setpoint for the isolation and thinks this is not high enough for an isolation. The second part is plausible since it is correct.

The "D" distractor is plausible if the applicant does not remember the setpoint for the isolation and thinks this is not high enough for an isolation. The second if the applicant thinks Drywell radiation high would be assumed in the analysis just because Drywell radiation has such a high range of indication.

A. **Correct** - See description above.

B. **Incorrect** - See description above.

C. **Incorrect** - See description above.

D. **Incorrect** - See description above.

References:
NONE

K/A:

2.3 Radiation Control

G2.3.15 Knowledge of radiation monitoring systems, such as fixed radiation monitors and alarms, portable survey instruments, personnel monitoring equipment, etc.
(CFR: 41.12 / 43.4 / 45.9) 2.9 3.1

SRO only because of link to 10CFR55.43(b)(2): Facility operating limitations in the technical specifications and their bases.

LESSON PLAN/OBJECTIVE:

D11-CAMS-LP-05101,Containment Atmospheric Monitoring System, **Ver 3.0**,
EO 300.006.C.02

References used to develop this question:

SRO ONLY Guideline
TS Bases 3.3.6.1
34AR-602-436-2, Containment Radiation High/Inop, **Ver 2.4**

Bank question from HLT Database used on 2011 NRC Exam Q#98

99. G2.4.9 001/20102EP/001.088.A.01/NEW/P-EP/SRO ONLY/G2.4.9/3/H/3/ARB/ELJ

Unit 1 was operating at 5% RTP when an unisolable MSL break occurs in the Turbine Bldg.

At 12:30,

- o A radiation release is in progress
- o An Emergency is declared

At 13:00, NMP-EP-104-F07, Offsite Dose Assessment Hatch Prompt Offsite Dose Assessment, (PODA) results in the following:

- o 1 mile is 1200 mr/hr TEDE
- o 2 mile is 600 mr/hr TEDE

At 13:02, an Emergency Depressurization is performed

At 13:15, NMP-EP-104-F07 is performed again resulting in the following:

- o 1 mile is 50 mr/hr TEDE
- o 2 mile is 20 mr/hr TEDE

Based on the above conditions,

NMP-EP-112, Protective Action Recommendations, _____ REQUIRED to be entered.

Based on the results of the PODA at 13:15 and IAW NMP-EP-104-F07, the Emergency classification _____ be DOWNGRADED.

A. is;
can

B. ✔ is;
can NOT

C. is NOT;
can

D. is NOT;
can NOT

Description:

GENERAL EME

RB Vent Accident Range Mon 1/2D11-P005 2.9 uCi/cc
Main Stk Accident Range Mon 1D11-P006 8.8 x 10^3 uCi/cc

OR

2. Dose assessment using actual meteorology indicates doses greater than 1000 mR TEDE **OR** 5000 mR thyroid CDE at or beyond the site boundary.

OR

3. Field survey results indicate CLOSED WINDOW dose rates exceeding 1000 mR/hr expected to continue for more than one hour, **OR** analyses of field survey samples indicate thyroid CDE of 5000 mR for one hour of inhalation, at or beyond the site boundary.

IAW NMP-EP-112, Protective Action Recommendations:
This procedure provides guidelines for determining Protective Action Recommendations (PARs) which will be communicated to offsite authorities during a General Emergency. PARs are provided as an input to the protective action decision making process for the development of protective action orders. Protective action orders are communicated to the general public by offsite authorities to avoid or reduce the exposure incurred from an accident condition that results in a significant radiological effluent release or has the potential for a release based on degraded plant conditions.
Protective actions are recommended to offsite authorities to avoid or reduce the radiological exposure that may be incurred by the public from an accident condition that results in a significant radiological effluent release or has the potential for a release based on degraded plant conditions.
This procedure is performed, as required, for declared emergencies following declaration of a General Emergency. Attachments 2, 3, and 4 are site specific. Non-applicable site attachments may be removed and discarded to ensure usage of the correct site-specific attachment.

IAW NMP-EP-104-F07, Offsite Dose Assessment Hatch Prompt Offsite Dose Assessment, Limitations:
This procedure can NOT be used to downgrade the severity of an emergency classification.

SRO JUSTIFICATION:

The SRO must have detailed procedure knowledge of NMP-EP-112/NMP-EP-104-F07 and remember the mitigation strategy of declaring a General Emergency based on release rates then determine the use of PARs for the situation. This knowledge level is above the RO knowledge level.

K/A JUSTIFICATION:

This question satisfies the K/A statement by requiring the applicant to use NMP-EP-112 to provide protective actions (mitigation strategies) to the public due to the loss of coolant accident (MSL break in Turbine Building). Providing the actions to the public mitigates the effect to the public from this accident.

The "A" distractor is plausible since the first part is correct. The second part is plausible since the conditions for declaring a General Emergency no longer exist.

The "C" distractor is plausible if the applicant realizes that an emergency is declared (given in stem) but does not declare a General Emergency but declares a lower classification for an emergency. Conditions are met for an Site Area Emergency due to exceeding 100 mrem/hr

TEDE or 500 mrem/hr Thyroid. The second part is plausible since the conditions for declaring a General Emergency no longer exist.

The "D" distractor is plausible if the applicant realizes that an emergency is declared (given in stem) but does not declare a General Emergency but declares a lower classification for an emergency. Conditions are met for an Site Area Emergency due to exceeding 100 mrem/hr TEDE or 500 mrem/hr Thyroid. The second part is plausible since it is correct.

A. **Incorrect** - See description above.

B. **Correct** - See description above.

C. **Incorrect** - See description above.

D. **Incorrect** - See description above.

References:
NONE

K/A:

2.4 Emergency Procedures / Plan

G2.4.9 Knowledge of low power/shutdown implications in accident (e.g., loss of coolant accident or loss of residual heat removal) mitigation strategies.
(CFR: 41.10 / 43.5 / 45.13) 3.8 4.2

SRO only because of link to 10CFR55.43 (5): Assessment of facility conditions and selection of appropriate procedure.

LESSON PLAN/OBJECTIVE:

EP-LP-20102, Protective Actions, **Ver. 3.0**, EO 001.088.A.01

References used to develop this question:

NMP-EP-112, Protective Action Recommendations, **Ver. 4.0**
NMP-EP-104-F07, Offsite Dose Assessment Hatch Prompt Offsite Dose Assessment, **Ver 1.0**

100. G2.4.31 001/00401B31/004.001.A.07/NEW/P-EP/SRO ONLY/G2.4.31/3/H/2/JSC/ELJ

Unit 2 is operating at 90% RTP when the following annunciators and indications are received:

- o DRYWELL PRESS HIGH, (602-210)
- o PRIMARY CNMT HIGH PRESSURE TRIP, (603-106)
- o· PRIMARY CNMT PRESSURE HIGH, (603-115)

- o Drywell pressure is 8.5 psig and slowly increasing

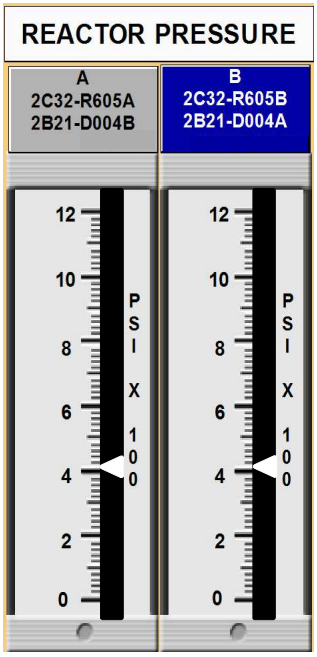

Based on the above conditions,

2B31-F031A, Recirc pump 2A discharge valve, _____ have received a signal to AUTOMATICALLY close.

IAW NMP-EP-110-GL02, HNP EALs - ICs, Threshold Values and Basis, the HIGHEST Emergency Classification is _____ .

A. will;
an Alert Emergency

B. will;
a Notification of Unusual Event

C✓ will NOT;
an Alert Emergency

D. will NOT;
a Notification of Unusual Event

Description:

The auto closure of the recirc pump discharge valve is initiated when RPV pressure decreases to

The auto closure of the recirc pump discharge valve is initiated when RPV pressure decreases to 370 psig and a LOCA signal (from either Div I or Div II isolation logic) is present simultaneously. The valve cannot be opened if a LOCA signal is present, regardless of reactor pressure.

An Alert emergency is declared based on the Fission Product Barrier Evaluation Chart-Modes 1-2-3. Based on the 8.5 psig in the drywell, the plant has a loss of the RCS barrier.

Figure 1 - Fission Product Barrier Evaluation Chart - Modes 1 – 2 – 3			
GENERAL EMERGENCY	SITE AREA EMERGENCY	ALERT	UNUSUAL EVENT
FG1 Loss of ANY Two Barriers AND Loss or Potential Loss of Third Barrier	FS1 Loss or Potential Loss of ANY Two Barriers	FA1 ANY Loss or Potential Loss of EITHER Fuel Clad OR RCS Barrier	FU1 ANY Loss or Potential Loss of Containment Barrier

Fuel Clad Barrier (Pg. 37)	
Loss	**Potential Loss**
1. Primary Coolant Activity Level (Pg. 37) Total Coolant Activity greater than 300 uCi/gm DEI_{131} OR 2.93E+03 uCi/gm total RCS activity	
2. Reactor Vessel Water Level (Pg. 38) Level less than -193 inches	2. Reactor Vessel Water Level (Pg. 38) Level less than -155 inches
3. Drywell Radiation Monitoring (Pg. 38) DWRRM greater than 7,000 R/hr	
4. Other Indications (Pg. 38) Offgas pre- and post-treatment monitors Offscale High OR Drywell Post LOCA Monitor Offscale High	
5. Emergency Director Judgment (Pg. 38) Judgment by the ED that the Fuel Clad Barrier is lost. Consider conditions not addressed and inability to determine the status of the Fuel Clad Barrier	5. Emergency Director Judgment (Pg. 38) Judgment by the ED that the Fuel Clad Barrier is potentially lost. Consider conditions not addressed and inability to determine the status of the Fuel Clad Barrier.

RCS Barrier (Pg. 39)	
Loss	**Potential Loss**
1. Drywell Pressure (Pg. 39) Pressure greater than 1.85 PSIG	
2. Reactor Vessel Water Level (Pg. 39) Level less than -155 inches	
3. RCS Leak Rate (Pg. 39) Unisolable Main Steamline break as indicated by the failure of both MSIVs in any one line to close AND A. High MSL Flow OR B. High Steam Tunnel Temperature annunciators OR C. Turbine Building MSL leak annunciator OR D. Direct report of steam release	3. RCS Leak Rate (Pg. 39) RCS leakage GREATER THAN 50 gpm inside the drywell OR Unisolable primary system leakage outside drywell as indicated by Secondary Containment operating temperatures or radiation levels above Max. Normal Operating Values (SC - Secondary Containment Control Flowchart – Table 4 & Table 6)
4. Drywell Radiation Monitoring (Pg. 39) DWRRM greater than 84 R/hr	
5. Other Indications (Pg. 40) Drywell Post LOCA Monitor 4.71E+04 cpm	
6. Emergency Director Judgment (Pg. 40) Judgment by the ED that the RCS Barrier is lost. Consider conditions not addressed and inability to determine the status of the RCS Barrier	6. Emergency Director Judgment (Pg. 40) Judgment by the ED that the RCS Barrier is potentially lost. Consider conditions not addressed and inability to determine the status of the RCS Barrier.

Containment Barrier (Pg. 41)	
Loss	**Potential Loss**
1. Drywell Pressure (Pg. 41) Rapid unexplained decrease following initial increase OR Drywell pressure response not consistent with LOCA conditions	1. Drywell Pressure (Pg. 41) 56 PSIG AND rising OR Greater than or equal to 6% H_2 AND greater than or equal to 5% O_2
	2. Reactor Vessel Water Level (Pg. 41) Primary containment flooding required by EOPs as indicated by entry into procedure 31EO-EOP-112-1/2 Primary Containment Flooding.

The conditions to declare a Notification of an Unusual event have also been met based on SU5-RCS Leakage.

2. IDENTIFIED leakage greater than 25 gpm.

SRO JUSTIFICATION:

The SRO must have detailed procedure knowledge of NMP-EP-110-GL02, HNP EALs - ICs, Threshold Values and Basis, and recoginition of the specific plant conditions to classify the appropriate emergency. Declaration of an emergency is above the RO knowledge level.

K/A JUSTIFICATION:

This question satisfies the K/A statement by requiring the applicant to be able to diagnose indications of a failure of both Recirc pump seals in one loop and be able to respond to the situation by isolating the leak based on annunciator response procedures and then be able to classify the emergency.

The "A" distractor is plausible if the applicant thinks about the annunciator REACTOR PRESS LOW 500 PSIG (601-314) which has a setpt of 425 psig. At this pressure, LPCI and CS valves open to lineup for injection. Injection will occur as soon as pressure lowers below the shutoff head of each pump. The answer is plausible also if RPV pressure were below 370 psig. The second part is plausible since it is correct.

The "B" distractor is plausible if the applicant thinks about the annunciator REACTOR PRESS LOW 500 PSIG (601-314) which has a setpt of 425 psig. At this pressure, LPCI and CS valves open to lineup for injection. Injection will occur as soon as pressure lowers below the shutoff head of each pump. The answer is plausible also if RPV pressure were below 370 psig. The second part is plausible since a Notification of an Unusual Event (SU5) conditions have been met however it is not the highest emergency level classification.

The "D" distractor is plausible since the first part is correct. The second part is plausible since a Notification of an Unusual Event (SU5) conditions have been met however it is not the highest emergency level classification.

A. **Incorrect** - See description above.

B. **Incorrect** - See description above.

C. **Correct** - See description above.

D. **Incorrect** - See description above.

References:
NONE

K/A:

2.4 Emergency Procedures / Plan

G2.4.31 Knowledge of annunciator alarms, indications, or response procedures. (CFR: 41.10 / 45.3) 4.2 4.1

SRO only because of link to 10CFR55.43(b)(5): Assessment of facility conditions and selection of appropriate procedure, recalling the action in the body of procedure and when to take the action.

LESSON PLAN/OBJECTIVE:

B31-RRS-LP-00401, Reactor Recirculation System, **Ver 10.5**, EO 004.001.A.07

References used to develop this question:

34AR-601-314-2, REACTOR PRESS LOW 500 PSIG, **Ver 2.4**

You have completed the test!