UNITED STATES OF AMERICA
NUCLEAR REGULATORY COMMISSION

Title: BRIEFING ON STATUS OF WEST VALLEY PROJECT

Location: ROCKVILLE, MARYLAND

Date: MARCH 29, 1989

Pages: 64

NEAL R. GROSS AND CO., INC.

COURT REPORTERS AND TRANSCRIBERS
1323 Rhode Island Avenue, Northwest
Washington, D.C. 20005
(202) 234-4433

DISCLAIMER

This is an unofficial transcript of a meeting of the United States Nuclear Regulatory Commission held on MARCH 29, 1989 in the Commission's office at One White Flint North, Rockville, Maryland. The meeting was open to public attendance and observation. This transcript has not been reviewed, corrected or edited, and it may contain inaccuracies.

The transcript is intended solely for general informational purposes. As provided by 10 CFR 9.103, it is not part of the formal or informal record of decision of the matters discussed. Expressions of opinion in this transcript do not necessarily reflect final determination or beliefs. No pleading or other paper may be filed with the Commission in any proceeding as the result of, or addressed to, any statement or argument contained herein, except as the Commission may authorize.

UNITED STATES OF AMERICA

NUCLEAR REGULATORY COMMISSION

- - - -

BRIEFING ON STATUS OF WEST VALLEY PROJECT

- - - -

PUBLIC MEETING

Nuclear Regulatory Commission
One White Flint North
Rockville, Maryland

Wednesday, March 29, 1989

The Commission met in open session, pursuant to notice, at 10:00 a.m., Lando W. Zech, Jr., Chairman, presiding.

COMMISSIONERS PRESENT:

Lando W. Zech, Jr., Chairman of the Commission
Thomas M. Roberts, Commissioner
Kenneth M. Carr, Commissioner
Kenneth C. Rogers, Commissioner
James R. Curtiss, Commissioner

STAFF SEATED AT THE COMMISSION TABLE:

SAMUEL J. CHILK, Secretary

WILLIAM C. PARLER, General Counsel

JOHN E. BAUBLITZ, Acting Director
Office of Remedial Action & Waste Technology

DR. JOSEPH COLEMAN, Director
Division of Waste Treatment Projects

ROY THOMAS, President
West Valley Nuclear Services
Westinghouse Electric Corporation

TED K. DeBOER, Director
Radioactive Waste Management Program
New York State Energy Research & Development Authority

HOWARD A. JACK, General Counsel, Secretary
New York State Energy Research & Development Authority

1 P-R-O-C-E-E-D-I-N-G-S

2 2:00 p.m.

3 CHAIRMAN ZECH: Good afternoon, ladies and
4 gentlemen.

5 Today, the Commission will be briefed on the
6 West Valley Demonstration Project by the Department of
7 Energy and the State of New York.

8 The briefing will be conducted by John
9 Baublitz, Acting Director, Office of Remedial Action
10 and Waste Technology at the Department of Energy, and
11 Ted DeBoer, Director of Radioactive Waste Management,
12 New York State Energy Research and Development
13 Authority.

14 West Valley Demonstration Project Act
15 instructs the NRC to monitor the project to ensure
16 that public health and safety are protected. The
17 Agency fulfills its responsibility by reviewing safety
18 analysis reports, conducting site visits, and
19 providing consultation to the Department of Energy.

20 Although the Act does not require NRC
21 licensing of either low-level and transuranic waste
22 disposal or decontamination and decommissioning
23 process, it is my understanding that all those
24 activities are to be carried out in accordance with
25 the applicable NRC licensing requirements.

1 All activities in the project require good
2 coordination between the staffs of the Nuclear
3 Regulatory Commission, the Department of Energy and
4 the State of New York. The Commission is interested
5 in hearing today as to how the cooperation and
6 coordination between these organizations is
7 progressing.
8 Copies of the slide, I understand, are
9 available at the entrance to the meeting room.
10 Do any of my fellow Commissioners have any
11 comments to make before we begin?
12 If not, gentlemen, we welcome you here today
13 and we'll ask you to proceed.
14 Mr. Baublitz, are you going to be first?
15 MR. BAUBLITZ: Yes, sir. Thank you, Mr.
16 Chairman. It is my pleasure to be here today to brief
17 you on the West Valley Project. As you remember, I
18 was here several months ago, last summer, and gave you
19 a review of the programs in our Remedial Action and
20 Waste Technology Office, which have close involvement
21 with the Commission and the staff. As a follow-on to
22 that, we understood that you were interested
23 specifically in some more specific information about
24 the West Valley Project, how it was going, and then
25 specifically, as you mentioned, Mr. Chairman, the

1 interaction and relationships between us, NRC, and New
2 York State.
3 Let me introduce to you those that are
4 accompanying me here today. On my left, Doctor Joseph
5 Coleman, who is our Director of the Division of Waste
6 Treatment Projects. His division is responsible for
7 our West Valley activities.
8 Doctor Willis Bixby is our Director of the
9 West Valley Project in New York. He could not be with
10 us today, but representing him, in the back, is Chuck
11 Lunbird, who is the gentleman who's done the most work
12 on developing the plans for the environmental impact
13 statement which is the focus of our initial work on
14 this close coordination with New York State for the
15 final site closure.
16 Then on the left here, Doctor Roy Thomas,
17 who is President of West Valley Nuclear Services, the
18 prime contractor for the project at West Valley.
19 Mr. DeBoer, as you mentioned, will be giving
20 the presentation following mine for New York State.
21 (Slide) Could I have the first slide,
22 please?
23 This is a simple organization chart to
24 simply remind you how we fit together
25 organizationally, just to put the pieces in

1 perspective. I work for the Assistant Secretary of
2 Nuclear Energy and under our overall jurisdiction, the
3 Idaho Operations Office is directly responsible for
4 the West Valley Project and have provided a project
5 office and project team at the West Valley location to
6 implement the day to day management of the project.
7 As we mentioned, the West Valley Nuclear Services
8 Company is the principal contractor that's carrying
9 that out.
10 In a very close coordination role, of
11 course, with us is the New York Energy Research and
12 Development Authority, as shown by the dashed lines on
13 the chart, and they also have a project office at the
14 site which is staffed by their own personnel
15 (Slide) Next slide, please.
16 To introduce the project, I'm providing a
17 bit of background, a current status on where we are
18 right now. Then I'll go into the plans for what we
19 call our Phase II, the final decontamination and
20 decommissioning phase of the project which leads
21 ultimately to site closure.
22 To review the history briefly, we have a
23 chronology listed here going all the way back to 1961,
24 when New York State acquired property for the
25 establishment of the Western New York Nuclear Services

1 Center, to be a commercial reprocessing facility for
2 nuclear fuel.
3 An agreement was reached in 1962 with the
4 Atomic Energy Commission and New York State to
5 construct such a plant and the construction was
6 completed in 1966.
7 From that year until '72, Nuclear Fuel
8 Services reprocessed spent nuclear fuel, a total of
9 approximately 640 metric tons. Then, in 1972, the
10 plant was shut down for modification and expansion.
11 From '73 through '75, while the plant was
12 shut down, they continued to receive spent nuclear
13 fuel in the assumption, the expectation that
14 reprocessing would be resumed.
15 Finally then in 1976, NFS decided to
16 withdraw from the reprocessing business and did so.
17 Subsequently, to deal with the waste that was at the
18 site, the remaining spent fuel and the necessary
19 clean-up associated with the entire site, Congress in
20 1980 passed a specific piece of legislation that
21 authorized the Department to carry out a high-level
22 waste demonstration project in conjunction with New
23 York State.
24 In 1981, the Department selected
25 Westinghouse and its principal subsidiary, which Mr.

1 Thomas now heads, to be the operating contractor. In
2 February of 1982, we assumed operational control of
3 the project premises.
4 (Slide) Next slide, please.
5 This shows pictorially a simple sketch of
6 the key parts of the West Valley site. The processing
7 plant is that facility which was built and used for
8 the reprocessing itself.
9 There are two tanks, named 8D-1 and 8D-2,
10 which contain the high-level liquid waste that was
11 resulting from the reprocessing operations, and there
12 are two waste disposal areas. The one that's labeled
13 New York State Low-Level Waste Disposal Area had no
14 direct connection with the high-level waste processing
15 facility. It was a general low-level waste site for
16 commercial low-level waste. And then the so-called
17 NDA, the Nuclear Regulatory Commission Disposal Area,
18 that did in fact receive waste from the processing
19 plant while it was operated. Mr. DeBoer, in his
20 discussion, will talk about those parts of the
21 facility.
22 (Slide) Next slide, please.
23 The goal of our project, of course, is to
24 demonstrate solidification of the high-level liquid
25 waste that's at the site and prepare it for permanent

1 disposal in a federal repository. The authority is
2 the legislation that was enacted in 1980.
3 (Slide) Next slide.
4 To accomplish all the objectives of the
5 project, we divided into two phases. The first phase
6 which we are currently involved in now is to solidify
7 the high-level waste in a form suitable for ultimate
8 disposal and develop the containers that would be
9 needed to, in fact, contain it for disposal. So, the
10 solidification part is the focus of Phase I.
11 Phase II picks up the transport of that
12 solidified waste to the repository, disposal of the
13 low-level and transuranic waste that's produced by the
14 solidification project and decontamination and
15 decommission of all those facilities that were used in
16 the project.
17 (Slide) Next slide.
18 Our current schedule for the project is to
19 complete the solidification phase by 1998. I might
20 mention at this point, in my earlier briefing I
21 believe I probably gave you some similar information
22 on this project in a shorter form. Since that time,
23 as a result of the actions on the 1990 budget, the
24 project completion date has stretched. We told you
25 probably in June that the completion of Phase I was

1994. We have slipped by four years as a result of the actions on the 1990 budget.

The second phase, the D&D phase, goes on for a very long time and is estimated now to be completed in the year 2020.

Implementation of the project is, as I had mentioned before, assigned to our project office at West Valley and the cost of the project is shared in accordance with the terms of the legislation, 90 percent DOE, 10 percent state.

(Slide) Next slide, please.

I've summarized here the NRC role in accordance with the authorizing legislation. NRC is required by the legislation to review and consult with the Department on our plans for high-level waste removal; solidification and preparation for disposal; our plans for decontamination of the facilities used for the solidification; on the form and containers to be used for the high-level waste disposal; and also then, the safety analysis reports that are prepared for the individual parts of the facility as they are developed and readied for operation; and, of course then, in a more generalized way, all information related to potential hazards to public health and safety in a broad general operational sense.

1 (Slide) Next slide, please.

2 The NRC, of course, also has free access to
3 the site to monitor our activities and they are
4 specifically to prescribe requirements for
5 decommissioning and decontamination in terms of what
6 we would loosely call clean-up criteria.

7 (Slide) Next slide, please.

8 The Department and the NRC implemented a
9 memorandum of understanding subsequent to the passage
10 of the legislation to establish the procedures for the
11 relationship between the agencies. The scope of the
12 agreement encompasses the development, design,
13 construction, operation, decontamination and
14 decommissioning activities. In other words, the
15 entire scope of the project.

16 The focus of the responsible parties with
17 the Department are the Office of Nuclear Energy, as I
18 mentioned focused in our West Valley Project Office;
19 and with the NRC, the Office of Nuclear Material
20 Safety and Safeguards in Region I up in King of
21 Prussia.

22 (Slide) And then a very brief summary on
23 the next slide of the contents of the MOU, very
24 straightforward. It was agreed to and signed in
25 September of 1981.

1 (Slide) Next slide, please.

2 What I'd like to do now is review briefly
3 the status of the project in that part which we call
4 Phase I, whose objective is the demonstration of the
5 solidification and preparation of the high-level waste
6 for disposal. We have outlined on this slide the
7 portions of the total project scope that fall under
8 Phase I, the solidification of the waste, the
9 development of the containers, and then the
10 decontamination of facilities that we would need to do
11 the solidification work.

12 (Slide) The next slide is a simple
13 pictorial to give you essentially a quick photo of
14 what the basic Phase I project is all about. Taking
15 the high-level waste in the 8D-2 tank, which is
16 divided basically into two phases, there's a liquid
17 supernatant phase and a sludge phase at the bottom of
18 the tank. The supernatant, which is predominantly
19 contaminated with cesium, is processed in one stream
20 to produce ultimately drums of low-level radioactive
21 waste. The sludge is processed through a different
22 stream to produce the glass logs that will ultimately
23 go to the repository.

24 (Slide) The next slide shows --

25 COMMISSIONER ROGERS: Excuse me. What's the

1 difference between 8D-2 and 8D-1?

2 MR. BAUBLITZ: 8D-2 has the --

3 COMMISSIONER ROGERS: Is there a difference?

4 MR. BAUBLITZ: 8D-2 has the large bulk
5 volume of the waste. 8D-1 has a much smaller volume
6 of waste. That will be, in fact, combined with the
7 8D-2 waste and all be handled together ultimately.
8 This is an oversimplified rendering, just for
9 convenience.

10 (Slide) The next slide is again, of course,
11 still a schematic, a slightly more complicated view to
12 show the steps in the two processes. We've defined
13 the two processes to be used to solidify the waste as
14 low-level waste and high-level waste defined by the
15 end product of that stream. As I mentioned, the
16 supernatant gets treated first. That is treated
17 through a series of zeolite beds to remove the cesium.
18 There's an evaporation step to concentrate it and then
19 the liquid remaining, which is now a low activity, is
20 solidified in cement and those cement drums are
21 currently in storage, or being put in storage as
22 they're produced, pending a final decision on
23 disposal.

24 The vitrification cycle is the lower half of
25 the picture where the sludge in the waste tanks is

1 combined with the zeolite bed material from the
2 supernate processing and that combined then is made
3 into the glass in the vitrification system which
4 produces the roughly 300 glass logs which will
5 ultimately be disposed of in the repository.
6 (Slide) The next slide just gives you a
7 current status of where we are in the Phase I of the
8 project. The supernatant processing system was
9 started up with radioactive processing in May of last
10 year. We've had very good operational success.
11 Decontamination factors through the zeolite beds has
12 ranged from 5,000 to 150,000 under different operating
13 conditions, well above that range and the entire range
14 is well above the design goal of 1,000.
15 The product acceptance rate, that is the
16 acceptance rate for the cement drums at the other end
17 of the screen, has been very high. The dose rates on
18 the drums has been about a factor of ten below design
19 expectations. We have achieved full NRC staff
20 concurrence on the cement waste form and the
21 interactions with the staff in reaching that agreement
22 I think have been very good. We've had very good
23 working relationships with the staff in reaching that
24 objective.
25 As of March 10th, a total of 150,000 odd

1 gallons have been processed and we produced about 2900
2 cement drums. Referring back to the earlier slide
3 where our total number of drums is some 15,000, you
4 can see we're a third or so, a little less than a
5 third of the way along.
6 COMMISSIONER CARR: Initial estimate looked
7 like it might have been 13,000, and that's ten percent
8 or so. What happened? It just turns out you're
9 getting more drums than you thought you would?
10 MR. BAUBLITZ: I think our experience is
11 showing more accurately what our long-term expectation
12 is. We're still, I guess it's fair to say, fine
13 tuning the process a bit in terms of bead rates,
14 dilution factors in terms of the feed. That all
15 affects the actual number of drums produced.
16 Our overall goal of the operation of the
17 system is to try to get as much of the cesium out of
18 the system as possible and make as few glass logs as
19 we can. In other words, to get as much out of the
20 front end of the cycle to reduce the number of logs as
21 we can.
22 (Slide) The next slide --
23 COMMISSIONER CARR: Do you mean by that
24 you're expecting -- if you get more drums, you'll get
25 fewer logs?

1 MR. BAUBLITZ: In a rough way.

2 COMMISSIONER CARR: Okay.

3 MR. BAUBLITZ: Only roughly.

4 The next slide shows our current overall
5 schedule. We are in the process now of processing
6 supernatant and doing what is called the civil
7 construction. That's the building and shielding
8 construction in preparation for the vitrification
9 system. When that is complete in 1991, we will be
10 finishing or proceeding with the rest of the
11 construction of the vitrification system, the sludge
12 mobilization system, and processing additional washing
13 of the sludge to try to get as much of the cesium out
14 as we can. Leading then, in about late 1994, to cold
15 operation of the new melter and hot operation of the
16 melter in about late 1996, about a two year
17 operational cycle for the melter to produce the logs.

18 COMMISSIONER ROGERS: What happens in the
19 cold operations?

20 MR. BAUBLITZ: That's basically a full
21 check-out of the melter in cold system. We have
22 operated a melter at the site for a number of years.
23 I guess we will complete something like five years of
24 operation of that melter in the next year. That
25 melter will, in fact, then be taken off-line and

1 refurbished as a back-up. A brand new melter will be
2 procured and installed for the actual production. So,
3 the cold ops. is principally to get the new melter
4 operating and get all the operating parameters down
5 very confidently before we start our operations.
6 (Slide) I've included on the next slide a
7 summary of what is called the waste acceptance process
8 because it does relate to the operation of the melter
9 and the things that we're doing along with the
10 repository program at DOE to assure ourselves that the
11 logs that will be produced by the project will
12 successfully be handled by the repository program, the
13 licensing action that they will be going through with
14 the NRC for the repository and then ultimately the
15 successful disposal of the logs at the repository.
16 There's a sequence of steps that had been
17 identified for the project in conjunction with a
18 repository program. Some waste acceptance preliminary
19 specifications, as they're called, have been
20 developed. That provides the targets for the
21 operation of the melter. We, as a waste form
22 producer, develop, produce and characterize the waste
23 to meet the requirements of those specifications.
24 There's a series of documents that are prepared to
25 provide the trail of that development. There's a

1 waste form compliance plan that's under development
2 now. There's a waste qualification report that will
3 summarize all the data from our current operations of
4 the test melter. It will include the cold operations
5 of the production melter and then finally when we get
6 into production in a hot sense, we will maintain
7 production records of what is actually being produced.
8 The repository program evaluate the waste
9 form as part of their work in site characterization to
10 establish suitability for licensing and, of course,
11 interact with the Commission for the repository
12 license. Then, of course, finally, the canisters and
13 the production records are provided for final
14 acceptance and disposal in the repository.
15 That concludes the summary on Phase I.
16 (Slide) The next slide initiates the
17 discussion on Phase II. Again, we've outlined the
18 parts and project scope that are included, the
19 transport of the glass logs to the repository, the
20 disposal of the waste that's been created in the
21 project and the decontamination and decommissioning of
22 the facilities that have been used in the project.
23 (Slide) The next slide shows our schedule
24 for the Phase II project. You can see we have two
25 options identified here to highlight the fact that

1 within the Department we're looking at ways that we
2 might be able to speed up the final steps of this
3 project by retaining the glass logs in storage for a
4 shorter period of time.
5 The base case shows that following
6 completion of the vitrification in 1998, we will have
7 the logs under storage until about 2009, which is the
8 earliest we expect the repository to be in a position
9 to accept them. The dashed line shows an alternate
10 case. If we can identify a location within the
11 Department for storage of the logs while they're
12 waiting for the repository, and the obvious point here
13 is that DOE will have other vitrification facilities
14 operating, producing logs for disposal, that will be
15 in storage. And if it's feasible to combine the West
16 Valley logs with those Defense waste logs, we can save
17 a significant amount of time on the tail end of the
18 project.
19 There's no real safety issue here. It's
20 just clearly an economic issue that this project can
21 certainly save a significant amount of funds and time
22 if we could close up shop quite a few years earlier.
23 That's an issue that's open within the Department now
24 and quite possibly won't get resolved rapidly. But,
25 of course, it's not a real near-term issue, but it is

1 an important one.

2 (Slide) The next slide describes the
3 environmental impact statement for Phase II which we
4 have just initiated. We published a record of intent
5 in *The Federal Register* in December. We identified
6 that the EIS will address the completion of the
7 project which is the joint responsibility of DOE and
8 New York State under the terms of the legislation.
9 And, in addition, it will address the closure of the
10 overall center which will be the state's
11 responsibility following completion of the project.

12 The Department and New York State will
13 cooperate fully on the preparation of the EIS. We are
14 the lead agency for National Environmental Policy Act
15 compliance and New York State is the lead agency for
16 compliance with their equivalent legislation for
17 environmental compliance in New York State. The
18 process was kicked off with public scoping meetings in
19 Springville, New York, near the project site, in
20 February of this year.

21 (Slide) The next slide identifies those
22 things in the notice of intent that will be included
23 for decision-making by the project, the State and the
24 DOE together in the project sense. The first category
25 of things is building structures and system

1 components. This includes the former reprocessing
2 plant itself and the systems that we have installed in
3 it for the vitrification process, the high-level waste
4 storage tanks and vaults, the supernatant treatment
5 system which the project has installed in the vicinity
6 of the plant where the storage tanks are, the high-
7 level waste vitrification facility itself, and then an
8 assortment of miscellaneous auxiliary structures and
9 systems that are associated with the plant and the
10 operating facilities.
11 (Slide) The next slide shows the second
12 category of items to be evaluated. These are solid
13 and liquid waste management or disposal units. This
14 covers radioactive waste storage structures, stored
15 solidified high-level waste, stored low-level waste
16 and stored true waste.
17 That portion of the NRC licensed disposal
18 area, the so-called NDA, that is used for project
19 waste, I didn't mention it in the initial discussion
20 when I showed that snapshot of the site that showed
21 the NDA, but if you remember it's somewhat horseshoe-
22 shaped. The portion of that facility that's in the
23 horseshoe, some of it has been used by the project for
24 storage of project waste. So, that waste that was
25 stored there by the project will, of course, remain

1 the responsibility of the project.

2 Then there's a low-level liquid waste
3 treatment system that was part of the original
4 facility that the project is using for certain low-
5 level waste treatment for operational things.

6 (Slide) The next slide then shows the
7 proposed alternatives that will be considered, in this
8 case the decontamination, decommissioning enclosure
9 activities. This will include, for the primary
10 building structures and systems, a whole series of
11 options: decontamination for unrestricted use;
12 decontamination and sealing for restricted access--
13 that's sort of an entombment kind of option;
14 decontamination, demolition and in situ disposal;
15 decontamination, demolition and off-site disposal; and
16 then the no action alternative which is, I'm sure you
17 recognize, required by NEPA as opposed to be some
18 option that we would really seriously consider.

19 (Slide) Then in the category of solid and
20 liquid waste management of disposal units, the
21 alternatives include stabilization and closure;
22 exhumation, repackaging and disposal; or, again, the
23 no action option.

24 (Slide) The next slide shows a category of
25 alternatives that are associated specifically with

1 waste. The previous discussion of alternatives had
2 within it alternatives for treating facilities and
3 equipment that would produce waste. We've broken
4 these options out, just for information, to better
5 understand what's being planned to discuss, the
6 options that we're going to consider specifically for
7 disposal of waste.
8 This slide shows the considerations for
9 options or alternatives for disposal of waste other
10 than high-level. The ones that we're looking at are
11 fairly straightforward, on-site, off-site and interim
12 storage pending availability of some other disposal
13 capacity, as well as the no action alternative.
14 (Slide) The next slide talks to the
15 transportation of the stored high-level waste. This
16 provides us for the consideration of what I mentioned
17 was being considered early ship-out to an interim
18 storage site of the high-level waste, vitrified waste,
19 or on-site storage awaiting the availability of the
20 repository, or again the no action alternative.
21 (Slide) Then, finally, the last two slides
22 are devoted to a summary of the key areas of NRC
23 involvement. For the integrated radwaste treatment
24 system, that's the system currently operating,
25 periodic product quality reviews and long-term cement

1 performance reviews are both things that the
2 Commission staff are involved in and are very
3 important.
4 In the area of low-level waste storage and
5 disposal, a key item is the criteria for closure of
6 the West Valley Project, the item that we tend to
7 refer to colloquially sort of as D&D criteria. Very
8 important. The evaluation of West Valley's approach
9 for low-level waste and TRU disposition. That has to
10 be a very key item.
11 (Slide) The final slide continues this
12 list. The sludge mobilization system, preparation of
13 a safety evaluation report prior to our hot operation
14 of that system. For the vitrification system,
15 consultation on the final waste form and also a safety
16 evaluation report prior to hot operation of that
17 system. When we get to the stage of waste
18 transportation, the certification of appropriate
19 casks, and then finally, in general, the ongoing
20 monitoring of DOE on-site activities. We're
21 continuing with that.
22 That concludes my prepared presentation.
23 I'd be glad to take questions now or, if you prefer,
24 let Mr. DeBoer proceed and take questions after.
25 CHAIRMAN ZECH: Well, let's see if we have

1 any questions first for you, Mr. Baublitz. We
2 appreciate again your being with us here today.
3 Questions of my colleagues?
4 Commissioner Roberts?
5 COMMISSIONER ROBERTS: No.
6 CHAIRMAN ZECH: Commissioner Carr?
7 COMMISSIONER CARR: Sure, I've got some
8 curiosity questions.
9 I gather you haven't produced any glass logs
10 yet.
11 MR. BAUBLITZ: That's right.
12 COMMISSIONER CARR: Well, what are you doing
13 with the overflow from the supernatant treatment that
14 shows the drop down there? I mean you must be
15 generating something that --
16 MR. BAUBLITZ: The zeolite that is being
17 produced as we go along with the clean-up of the
18 supernatant is simply being stored. That will be
19 combined then with the sludge when we get ready for
20 vitrification.
21 COMMISSIONER CARR: Is it in the tank that
22 it's going to go to there to --
23 MR. BAUBLITZ: I guess it's being collected
24 in the bottom of the tank where it's being produced.
25 What we've done, there was a spare tank that was

1 essentially empty. We've installed zeolite beds in
2 this tank. And so, the supernatant runs in through
3 the beds in this tank and then out and over to the
4 main building. At the conclusion of a cycle, when we
5 need to change zeolite, we just drop the zeolite into
6 the bottom of this tank and just stay there until --
7 COMMISSIONER CARR: So, there will come a
8 point in time where if you can't vitrify, you're going
9 to have to stop when you fill that tank up, I guess?
10 MR. BAUBLITZ: I don't think they're linked
11 that way, no.
12 MR. THOMAS: They wouldn't fill the tank up.
13 MR. BAUBLITZ: Yes, we won't fill the tank.
14 In other words, we don't have to get vitrification
15 started by a certain time to catch up with the zeolite
16 production.
17 COMMISSIONER CARR: Okay. And maybe -- the
18 other question, you talk about campaigns, what's a
19 campaign? I gather this thing is not a continuous
20 process.
21 MR. BAUBLITZ: It's a batch operation, in a
22 sense, yes. Our campaigns for the supernatant
23 treatment system had been running about what, about
24 four weeks, something like that?
25 MR. THOMAS: About four weeks. A campaign

1 basically is determined by the level of cesium loading
2 on the zeolite columns. When we reach what we call a
3 breakthrough level, the campaign stops.
4 COMMISSIONER CARR: Okay. And how long does
5 it take between campaigns then?
6 MR. THOMAS: About two weeks.
7 COMMISSIONER CARR: The timetable for your
8 EIS that you're getting ready to run now, what does
9 that look like?
10 MR. BAUBLITZ: We're anticipating that it
11 will take us about four years to get all of it
12 completed.
13 COMMISSIONER CARR: From today?
14 MR. BAUBLITZ: From today. December, it's
15 close to today.
16 COMMISSIONER CARR: That's all I have right
17 now.
18 CHAIRMAN ZECH: Thank you.
19 Commissioner Rogers?
20 COMMISSIONER ROGERS: Well, I don't know
21 whether this would be answered in a later
22 presentation, but I was just curious as to what the
23 timetable is for processing the supernatant because
24 there seems to be some slippage in the schedule, but
25 it was different from what you just mentioned. The

1 supernatant decontamination and solidification process
2 extends into mid-1991 on your slide 17 here, while in
3 an earlier report that was supposed to be finished in
4 late 1989. Now, you mentioned some later dates for
5 completion of the full solidification.
6 MR. BAUBLITZ: Yes, there were two different
7 things that have happened.
8 COMMISSIONER ROGERS: There are two
9 different aspects of this.
10 MR. BAUBLITZ: We essentially re-baselined
11 the whole project. In other words, we started
12 essentially with a fresh slate from the bottom up on
13 the project about a year ago. We had experienced a
14 couple of specific things with regard to the planning
15 for the vitrification design and construction and
16 there were a number of other specific things that put
17 us well behind where our original target should have
18 been. So, at that time, we re-baselined the entire
19 project, came up with a new baseline and cost estimate
20 that was approved last summer and was the basis for my
21 discussion of last June, I guess. That was a delay
22 from the earlier information that you are probably
23 referring to that's had us completing supernatant
24 processing in '89.
25 According to our new revised schedule last

1 year, we were able to get the process started on time
2 this last spring and we're on track to meet the new
3 target as it's laid out here.
4 Now, the thing I mentioned at the outset was
5 that in preparing our 1990 budget, both for the year
6 1990 and the four subsequent years, because of the
7 shortness of overall dollars, we've had to stretch
8 everything out significantly. That has created a four
9 year stretch to the tail end of the entire Phase I
10 project.
11 COMMISSIONER ROGERS: I see. Okay. How
12 many programs at DOE interact with the West Valley
13 Project? How many things have to be coordinated here
14 to --
15 MR. BAUBLITZ: Well, I guess --
16 COMMISSIONER ROGERS: -- that are involved?
17 MR. BAUBLITZ: -- I should mention two
18 specifically. What we call the high-level waste
19 program, the Office of Civilian and Radioactive Waste
20 Management that's responsible for development of the
21 repository, we have a very formal link with them
22 through this high-level waste qualification process
23 and their interaction for licensing considerations on
24 the repository.
25 We also have a very vigorous but more

1 informal link with the Defense Programs people who are
2 developing vitrification facilities for the Defense
3 waste program. That's more of a technical interface.
4 The interface with high-level waste people is
5 technical and procedural and administrative as well.
6 COMMISSIONER ROGERS: Just those two then?
7 MR. BAUBLITZ: We have our Environment
8 Safety and Health Oversight people who have a close
9 role, for example, in the EIS process and those kind
10 of things. They have an important role in general
11 safety oversight of our operation. So they're clearly
12 important too.
13 I think those are the main ones. Have I
14 forgotten anybody important.
15 DOCTOR COLEMAN: Other than the normal
16 administrative and environmental oversight.
17 MR. BAUBLITZ: We get a lot of advice from
18 the General Counsel as a routine matter. I guess we
19 should throw him in.
20 A VOICE: Probably very helpful. Very good.
21 CHAIRMAN ZECH: Good advice like we get from
22 our General Counsel, I'm sure.
23 COMMISSIONER ROGERS: Does this all go
24 through a single contact point at DOE?
25 MR. BAUBLITZ: Yes. Our office is the focus

1 for the project.

2 COMMISSIONER ROGERS: Yes. There aren't

3 multiple approaches to the people there?

4 MR. BAUBLITZ: No. I think we have a good

5 point of contact system established. I would say that

6 resolution of all the issues is not necessarily easy

7 and smooth, but I don't think we have problems

8 associated with interfaces.

9 COMMISSIONER CARR: On the waste form

10 suitability part of the problem, I gather from what

11 you told us that the cement waste form has been deemed

12 suitable by all hands?

13 MR. BAUBLITZ: Yes, sir.

14 COMMISSIONER CARR: But you're still working

15 on the glassification waste form?

16 MR. BAUBLITZ: That's right and that's an

17 interesting issue because on one hand the Department

18 clearly wants to approach NRC and its licensing

19 process for the repository with a good story to tell,

20 having good data and good documentation, et cetera, et

21 cetera, on the waste to be produced.

22 On the other hand, from a practical point of

23 view, the glasses that we look through sometimes,

24 we're going to be producing 300 logs compared to

25 multi-tens of thousands of logs that the Defense

1 Programs people will produce and we'll share space in
2 the repository with a lot of spent fuel which is a
3 whole different ball of wax.
4 So, we feel from a technical point of view
5 there's probably legitimately less concern about the
6 quality of the West Valley glass logs than many of
7 these other things. But all of that notwithstanding,
8 we are, in fact, conforming to this process so that we
9 will have a good documented record of what it is we're
10 producing.
11 COMMISSIONER CARR: So that view of yours is
12 not necessarily shared by your Office of Civilian
13 Waste?
14 MR. BAUBLITZ: That's an accurate summary.
15 COMMISSIONER CARR: Right. So, there is
16 some liaison that's got to go on there?
17 MR. BAUBLITZ: Yes, sir.
18 COMMISSIONER ROGERS: Are there any overseas
19 sites that have similar approach to these problems to
20 the ones that you're adopting?
21 MR. BAUBLITZ: Yes. There are facilities, I
22 guess, in Germany that use a similar melter system.
23 We've had people over there, I guess sort of once a
24 year, on a regular basis, to share information. In
25 addition, we've had a lot of exchange of information

1 with the French that are using a different technology
2 from the liquid fed ceramic melter, but have a lot of
3 experience with the system they're operating. So,
4 there is a fairly vigorous exchange of information
5 there.
6 COMMISSIONER ROGERS: I think you may have
7 said something to it, but perhaps you could just
8 repeat it if you have, how you see the DOE
9 interactions with the NRC staff on matters relating to
10 West Valley. Have we provided appropriate guidance in
11 a timely fashion, for example?
12 MR. BAUBLITZ: Yes. I feel strongly that
13 the interface there has been good, that the staff
14 responses have been good and that it's been a positive
15 working relationship. I think that's gone well.
16 CHAIRMAN ZECH: Thank you.
17 Commissioner Curtiss?
18 COMMISSIONER CURTISS: Just a couple of
19 quick questions. On the waste form and the container
20 design, what's the pacing item now on the container
21 design? I guess I'm curious of your thoughts on
22 whether we're going to end up with a single container
23 that the civilian waste, the Defense vitrified waste
24 and this waste will be placed in for the repository or
25 whether you're looking at different container designs.

1 MR. BAUBLITZ: Let me clarify the question.
2 There is a canister into which the liquid waste will
3 be poured and then there will be some kind of a
4 container which will be part of its ultimate package
5 for disposal. The canister right now for the West
6 Valley Project is very similar to the canister that
7 will be used for the Defense waste facilities but
8 slightly different. We are looking right now at
9 whether or not some modifications to the canisters for
10 West Valley could be done simply and cheaply that
11 would make them really the same. The idea there is if
12 that were possible, there might clearly be some cost
13 savings overall by procuring some large number of
14 these canisters, a much larger procurement of the same
15 thing.
16 Now, separate from that, the repository
17 program is looking at the question of containers that
18 would be part of the disposal package. We're only
19 generally aware of what they're doing there. I really
20 couldn't give you much good information on where they
21 stand on their development of containers.
22 COMMISSIONER CURTISS: Do you intend to take
23 any credit for the canister that you're developing in
24 the repository program?
25 MR. BAUBLITZ: I don't think the canister

1 shows up as --

2 COMMISSIONER CURTISS: Just the container.

3 DOCTOR COLEMAN: It's not one of the

4 concerns we have under study. That's a repository

5 responsibility. The canister, as we view it, is

6 primarily for containment of the glass and for

7 handling and transportation and storage purposes.

8 Beyond that, I think you'd have to refer to the

9 repository program, what they're looking toward the

10 primary canister for.

11 COMMISSIONER CURTISS: The date that you

12 gave for sending the material to the repository, 2009,

13 is the pacing item for that the waste acceptance

14 schedule or is there something else that pushes that

15 out six years beyond when it opens?

16 MR. BAUBLITZ: Our understanding with the

17 repository people is that the first that they would be

18 ready to accept waste from West Valley would be six

19 years or five years, whatever it is, after they

20 initially open.

21 COMMISSIONER CURTISS: One other question.

22 Could you briefly discuss what kind of QA program you

23 have in place?

24 MR. BAUBLITZ: Maybe I'll defer that to Roy

25 Thomas to describe the QA program.

1 MR. THOMAS: I'm not prepared to describe it
2 in any significant detail. The QA program is under
3 development now. It's being developed in accordance
4 with the specification provided by the Office of
5 Geological Repository under OCRWM. I can say it will
6 be very extensive. It will be an integrated quality
7 assurance program that is tiered from Department of
8 Energy down through the contractor and integrated. It
9 should be finished within, oh, the next six to nine
10 months.
11 CHAIRMAN ZECH: Well, I'm pleased to hear
12 that you believe you're getting a cooperative and
13 positive results from your relationship with the NRC
14 staff.
15 The slip in your schedule for four years
16 because of the budget impacts from 1994 to 1998, do
17 you see any safety concerns in that slippage at all?
18 MR. BAUBLITZ: No, sir. The impacts are
19 associated with delays in getting the vitrification
20 equipment procured, installed and operating. That
21 requires some big bucks in fiscal '90 and '91. Those
22 are the two peak years. By having the dollars in
23 those two years reduced, it causes significant chunks
24 of the project to move out. But there would be no
25 safety concern at all, no, sir.

1 CHAIRMAN ZECH: All right. My fellow
2 Commissioners have already asked questions about your
3 relationships in DOE, the various offices you have
4 involved with waste matters, your offices and the
5 Office of Nuclear Energy. We interface, as you know,
6 with the Office of Civilian Radioactive Waste
7 Management as far as a repository is concerned. We're
8 well aware of the Office of Defense Projects and their
9 responsibilities for Savannah River and you mention
10 other DOE offices that have responsibilities.
11 It seems to me that you do have a challenge
12 as far as interacting with all those offices in DOE to
13 make sure that you have an integrated program.
14 Although that certainly -- in your area of
15 responsibility, I would hope that you are interfacing
16 closely with those other offices because they come
17 over and make presentations to us too and we would
18 like to feel like we're getting a consistent DOE
19 position. I would just encourage you to interface
20 with those offices. I know they may have different
21 views, but it's important that you have a consistent
22 view. I would encourage you to do that.
23 Are there any other questions before we
24 proceed?
25 Commissioner Carr?

1 COMMISSIONER CARR: I might ask a couple
2 more.
3 Do you see a mixed waste problem coming out
4 of this before we're through?
5 MR. BAUBLITZ: Not at this time. We have
6 entered into dialogue with those parts of the New York
7 State agencies that have those kind of
8 responsibilities, as well as EPA Region II with regard
9 to the possibility of needing permits under RCRA, for
10 example, on the site and so forth. Everything that's
11 developed so far does not indicate that we would have
12 a mixed waste problem.
13 COMMISSIONER CARR: Okay. Because I noticed
14 in our letter we cautioned you to consider any mixed
15 waste, but as far as you know there isn't any, right?
16 MR. BAUBLITZ: It hasn't reared its ugly
17 head so far. We're certainly keeping in tune with
18 that possibility because it is a special case.
19 COMMISSIONER CARR: Okay. And it looks like
20 that we owe you something in determining whether the
21 cement stabilized waste is TRU or low-level waste. Do
22 we owe you that decision, and if so, when by?
23 MR. BAUBLITZ: I would have to admit I think
24 that the ball is more in our court than yours at this
25 time. We do need to get your determination but we need

1 to provide an analysis of the waste --

2 COMMISSIONER CARR: You're going to give us

3 the basis for that determination, we hope?

4 MR. BAUBLITZ: That's right. That's right.

5 COMMISSIONER CARR: Do you have any idea

6 when you're going to do that?

7 MR. BAUBLITZ: It's part of the process that

8 will be involved in supporting analyses that will go

9 into the EIS. So, it's certainly in the next few

10 years. But at this point in time, we don't have a

11 finer tune on that.

12 COMMISSIONER CARR: Well, another thing, I

13 would say that in your EIS draft which we looked at, I

14 certainly commend you and our guys both for the total

15 site approach. I think there's no reason not to, once

16 you turn loose this thing, have it fixed whichever way

17 it goes. So I think you're going the right direction

18 on that. I'm sorry it's going to take four years.

19 CHAIRMAN ZECH: I would agree with the total

20 site approach too. I noted that and commend you for

21 that.

22 MR. BAUBLITZ: Thank you.

23 CHAIRMAN ZECH: Any other comments before we

24 proceed?

25 Mr. DeBoer, you may proceed, please.

1 MR. DeBOER: Thank you, Mr. Chairman.

2 It is a pleasure to be here today. I will
3 discuss the state activities associated with the
4 preparation of the Environmental Impact Statement for
5 completion of the West Valley Demonstration Project
6 and closure of the Western New York Nuclear Service
7 Center.

8 With me today is Mr. Howard Jack, the Energy
9 Authority's Secretary and General Counsel.

10 (Slide) Next slide, please.

11 This is a layout of the Western New York
12 Nuclear Service Center and the site is commonly called
13 the West Valley site. Almost all the facilities are
14 clustered in an approximately 200 acre area near the
15 center of the site. For the duration of the
16 demonstration project, the Department of Energy has
17 possession and control of almost all of the 200 acres
18 with the exception of the state licensed disposal
19 area. That is known as the project premises.

20 The remaining 3,000 acres of the site,
21 including the state disposal area, is under the
22 possession and control of the Energy Authority.

23 (Slide) Next viewgraph.

24 This is a similar slide to what Mr. Baublitz
25 showed and I just want to point out that the two

1 disposal areas are southeast of the process plant.
2 They are adjacent to each other, only a few feet
3 separate them, as well as most of the facilities at
4 the site. So, this is about the only way you could
5 really address all the issues and address closure of
6 the site, would be through joint cooperation. It
7 would be very difficult to separate out what you are
8 going to do with the closure or stabilization of
9 individual facilities.
10 Even though the NRC licensed disposal area
11 is within the project premises, the Energy Authority
12 has some responsibility for the decontamination and
13 decommissioning of that area.
14 COMMISSIONER CARR: How big is that New York
15 State low-level waste disposal area itself?
16 MR. DeBOER: It's about 400 by 500 feet.
17 Not much, just a few acres, I think.
18 (Slide) Next viewgraph.
19 In addition to being involved with the
20 Department of Energy in the West Valley Demonstration
21 Project activities outlined by Mr. Baublitz, the state
22 activities that we will be pursuing include the
23 decontamination and decommissioning of the balance of
24 the center, which includes the state-licensed disposal
25 area, the portion of the NRC-licensed disposal area

where Nuclear Fuel Services put plant waste prior to Department of Energy taking over the site on February 25th, 1982, the 3,000 acres outside of the project premises.

Another activity would be repossession of the project premises, taking it over from DOE, transfer from DOE to the Energy Authority and then long-term management of the center.

(Slide) Next slide.

State-licensed disposal area was operated by Nuclear Fuel Services from 1963 to 1975 as a commercial disposal facility. Total volume disposed was approximately 87,000 cubic yards or 2.4 million cubic feet of low-level waste. Since March 1983, it has been maintained and we are responsible for the state-licensed disposal area. It is licensed by our State Department of Environmental Conservation and our State Department of Labor.

(Slide) Next slide.

This picture shows the state-licensed disposal area. It consists of 14 trenches. Traditional shallow land burial techniques were used. The trenches are approximately 30 feet wide, 20 feet deep and 400 to 600 feet long. Trenches 6 and 7 really aren't trenches. Number 6 is a series of holes

1 that were made in the ground to place radioactive
2 wastes that were higher than would be normally put in
3 the rest of the trenches. These were done on the
4 basis of special approvals by the regulatory agencies
5 and that consists mostly of reactor components.
6 COMMISSIONER CURTISS: Are those squiggly
7 lines creeks or rivers?
8 MR. DeBOER: No, that's one thing I was
9 going to point. They're ravines. On the north side
10 of the disposal area, at the end of 2, 3, 4 and 5, and
11 about 20 to 30 yards only from the ends of those
12 trenches, is about a 30 foot drop-off down to a stream
13 on the bottom. On the east side of the disposal area,
14 it drops off about 10 feet to a stream.
15 COMMISSIONER CURTISS: Is the north
16 downgraded on this chart?
17 MR. DeBOER: North is --
18 COMMISSIONER CURTISS: Is it the way the
19 water flows?
20 MR. DeBOER: Yes, that is the direction in
21 which the hydrogeological characteristics of the soil
22 dictate the water flow.
23 COMMISSIONER CURTISS: Do you monitor in
24 that direction for ground water?
25 MR. DeBOER: Yes. There are streams on both

1 sides and we monitor in those streams as well as many
2 other places on the site.
3 COMMISSIONER CURTISS: What are you finding?
4 MR. DeBOER: The site has been -- is well
5 under control and no elevated levels of radionuclides.
6 But as you can see, that presents one of their biggest
7 problems and challenges in closing the site, the
8 erosion and landsliding being two major
9 considerations. The caps on the trenches are about
10 eight feet thick and they're covered with a good stand
11 of grass at the moment.
12 (Slide) Next slide.
13 This just gives you an idea of some of the
14 materials that were buried in the disposal area and,
15 of course, these all have to be considered in looking
16 at the various alternatives and closure options.
17 Source materials is 470,000 kilograms. That's mostly
18 depleted uranium with some natural uranium. Included
19 in that is about 1235 kilograms of U-235.
20 Plutonium is five kilograms and two
21 kilograms of that are two snap reactors or power
22 generators that were placed in the disposal area.
23 Enriched uranium, that was a ten percent
24 enrichment roughly, the 487 kilograms.
25 By-product materials were 700,000 curies

1 originally and that's down under 200,000 curies now.
2 And the primary radionuclides in this disposal area
3 are tritium, cobalt 60, strontium 90, cesium, and
4 carbon 14.
5 Then there are some radium and americium
6 sources that make up the bulk of the 500 curies.
7 (Slide) Next slide.
8 The NRC-licensed disposal area, that was put
9 into operation for disposal of plant-generated wastes
10 that were too high-level to be put into the commercial
11 disposal area. But while the state-licensed disposal
12 area was operating, Nuclear Fuel Services did put all
13 their low-level waste that met the criteria of that
14 disposal area into that facility. The state disposal
15 area was shut down in 1975. So, after 1975 and from
16 1975 through 1981, all of the plant generated waste
17 went into the NRC disposal area. The total volume
18 there was about 150,000 cubic feet or 5,600 cubic
19 yards.
20 (Slide) Next slide.
21 This is a layout of the NRC licensed
22 disposal area. As Mr. Baublitz mentioned, the NFS
23 wastes were placed in a horseshoe around the outer
24 edge of the facility and the demonstration project did
25 dispose of some real low-level Class A wastes in the

1 center portion there prior to 1986. The state
2 disposal area is immediately to the right on this
3 chart and adjacent to it.
4 In the area, most of the radioactivity was
5 the cladding hulls which came from the reprocessing of
6 the spent fuel. The method used primarily to dispose
7 of waste here was to dig holes that were about three
8 feet by seven feet and 50 feet deep with a clamshell.
9 Most of the wastes were put in there in 55 gallon
10 drums. Also in the hulls and ends hulls area, 42
11 Hanford end fuel elements found their way into the
12 disposal area and they are contained in three 55
13 gallon drums encased in concrete down at the bottom of
14 one of those holes.
15 COMMISSIONER CURTISS: Do you have a feel
16 for how deep these holes are?
17 MR. DeBOER: Fifty feet.
18 COMMISSIONER CURTISS: Fifty feet? That's
19 the deepest depth at which waste is buried here?
20 MR. DeBOER: Yes.
21 COMMISSIONER CURTISS: Okay.
22 MR. DeBOER: And on the state disposal area,
23 it was 20 feet. There also are a number of holes in
24 this area, shallow holes that were dug to put specific
25 pieces of equipment in and also the area -- there are

1 some reprocessing solvents in that disposal area that
2 were absorbed on absorbent clay, kitty litter, and
3 placed in -- about 500 gallons were placed in 1,000
4 gallon tanks and that was buried in these areas.
5 There's some -- we think there are 26 tanks in the
6 facility and placed in nine separate holes.
7 (Slide) Next slide.
8 COMMISSIONER CARR: The data they gave me
9 said that instead of three 55 gallon drums, those were
10 three 30 gallon drums. That's just for your
11 information.
12 MR. DeBOER: Okay. That may be right.
13 COMMISSIONER CARR: I'm sure nobody's looked
14 at them.
15 MR. DeBOER: The next slide gives some idea
16 of what materials are in the NRC-licensed disposal
17 area. Source materials, 1800 kilograms. That's
18 mostly the U-238. That came from the cladding hulls
19 that was left in.
20 The uranium fissionable, 23 kilograms.
21 About 3.3 of that is the fuel and 20 kilograms would
22 be in the hulls.
23 Then plutonium, five kilograms. .8 of that
24 is in the fuel and 4 in the hulls.
25 By-product materials, the primary

1 radionuclides that are there now as far as by-product
2 materials are cobalt 60, strontium 90 and cesium 137.
3 Reprocessing solvent, the best we can
4 determine from the records is that about 13,000
5 gallons of the spent solvent, which was tributyl
6 phosphate and kerosene, ended up in that disposal
7 area.
8 COMMISSIONER CARR: Is that in a tank or is
9 that just --
10 MR. DeBOER: They're in thousand gallon
11 tanks. It's our understanding that 500 gallons of the
12 solvent were mixed with the absorbent material in
13 those tanks. There was some migration noted in 1983
14 and the Department of Energy took quick action and
15 identified what the source of the kerosene was and two
16 holes were exhumed. I think it was a total of eight
17 tanks had been exhumed.
18 (Slide) Next slide, please.
19 Some of the alternatives that we will be
20 considering for the two areas -- well, they're the
21 same as were discussed by Mr. Baublitz for similar
22 facilities a few minutes ago. So, I won't bother
23 going through those.
24 (Slide) Next slide.
25 Another activity is repossession of the

1 Demonstration Project premises. The NRC license that
2 Nuclear Fuel Services had with the NRC was suspended
3 on February 25th, 1982 when Department of Energy took
4 possession and control of those project premises.
5 And, upon completion of the demonstration project, the
6 project premises will be returned to the Energy
7 Authority and NRC licensing action is required. Some
8 sort of an NRC licensing action would be required and
9 it is not certain at this point whether state
10 licensing action would be required.
11 (Slide) Next slide.
12 COMMISSIONER ROGERS: Excuse me. What would
13 be the issues that would have to be decided to resolve
14 those questions?
15 MR. JACK: If I could, Commissioner. The
16 primary question will be, depending on what is
17 determined through the Environmental Impact Statement
18 analysis and decision-making process, what kinds of
19 materials will remain on site or are proposed to
20 remain on site and then how does that affect whether
21 the NRC will then have jurisdiction over those
22 portions of the site or whether the state, as an
23 agreement state, will have jurisdiction over continued
24 regulation of it.
25 MR. DeBOER: Next slide.

1 CHAIRMAN ZECH: Proceed, please. Thank you.

2 MR. DeBOER: Among the major considerations

3 in closing the entire 3,345 acre site are -- well, it

4 was just mentioned the amount and type of radioactive

5 material to be left at the site and the surveillance

6 and monitoring programs and requirements that will be

7 necessary in the future and also consideration of what

8 areas can be released for unrestricted use, if any.

9 All of these will have to be considered in the

10 Environmental Impact Statement.

11 COMMISSIONER CARR: Is it a given that some

12 amount and type of radioactive material will be left

13 there?

14 MR. DeBOER: When you look at the potential

15 impacts and costs of exhuming everything that is at

16 the site, it leads you to think that that may be

17 something that may happen. But, of course, this will

18 not be determined until the Environmental Impact

19 Statement is completed.

20 COMMISSIONER CARR: Okay.

21 CHAIRMAN ZECH: What would the levels be

22 that might remain under those circumstances?

23 MR. DeBOER: I think it depends on the--

24 well, the NRC has to prescribe the decontamination and

25 decommissioning criteria and also, I think they have

1 already prescribed the performance objectives.

2 CHAIRMAN ZECH: But you'd intend to meet

3 those requirements, is what I'm saying.

4 MR. DeBOER: Yes.

5 COMMISSIONER CARR: But it's a cost trade-

6 off is what you're telling me?

7 MR. DeBOER: It's a -- pardon me?

8 COMMISSIONER CARR: A cost trade-off as to

9 whether it's complete --

10 MR. DeBOER: Well, cost and also if you did

11 exhume it, where would you put it? Many of these

12 materials would not be acceptable -- most of the

13 materials would not be acceptable in the new state-

14 licensed disposal area or any commercial disposal

15 area. I don't know where you would --

16 COMMISSIONER CARR: No place to put them

17 then?

18 MR. DeBOER: That's one of the big

19 considerations. And the personnel exposures, of

20 course, the worker exposures.

21 COMMISSIONER CARR: But this is what the EIS

22 is designed to work out.

23 MR. DeBOER: Yes.

24 MR. JACK: Another question would be what

25 would be the impact of trying to remove all the

1 radioactive materials from the site to some other
2 location?
3 COMMISSIONER CARR: Okay.
4 MR. DeBOER: (Slide) Next slide, please.
5 We were asked to discuss some of our issues
6 and concerns that we had. The key areas of NRC
7 involvement that were identified by Mr. Baublitz are
8 obviously those that we are very interested in. The
9 licensing action upon completion of the demonstration
10 project and the funding of the project, we are very
11 displeased with the OMB action that just is occurring
12 with the fiscal year '90 budget and which has resulted
13 apparently in the extension of the project for four
14 years. We hope that in 1991, the availability of
15 dollars will be restored to reduce the impact on the
16 project.
17 COMMISSIONER CURTISS: Is your ten percent
18 share constrained by state funding limitations or are
19 you pretty much able to get the necessary funds?
20 MR. DeBOER: Our funds are appropriated year
21 annually, the same way that the federal funds are. So
22 far, all our funds have been appropriated.
23 COMMISSIONER CURTISS: So, the funding
24 constraint is at the federal level rather than the
25 state level?

1 MR. DeBOER: Well, we are having our
2 problems in the state too. So, I don't know.
3 MR. JACK: We are doing our best to get full
4 appropriations from the state for our share and we
5 have not been advised of any problem in getting that.
6 MR. DeBOER: And the availability of the
7 high-level waste repository, unless the glass high-
8 level waste canisters produced at West Valley are
9 taken to some interim storage facility, then any
10 slippage in the licensing or operation of the high-
11 level waste repository will impact the Demonstration
12 Project and our cost.
13 The final one is the high-level waste form
14 acceptance specifications. Here we disagree with
15 Department of Energy and in particular RW. DOE
16 estimates that two-thirds of the spent fuel in the
17 first repository -- or two-thirds of the waste in the
18 first repository will be spent fuel and one-third will
19 be the glass. The plans that I have seen call for
20 over-packing the spent fuel.
21 In developing of the waste acceptance
22 specifications, DOE RW appears to have completely
23 ignored the presence of the spent fuel and have
24 established criteria which are quite restrictive, in
25 fact, which are somewhat difficult to meet and

1 certify. They provide also a waste form that is far
2 superior than any waste form you'll have with spent
3 fuel.
4 Millions of dollars have been spent and are
5 being spent to meet these waste acceptance
6 specifications. Since almost any glass that we make
7 at West Valley or Savannah River or Hanford will have
8 waste form properties that are far superior to spent
9 fuel and will be going to the same repository, we in
10 the Energy Authority in New York feel that it is
11 really unreasonable and extremely wasteful to require
12 these ultra conservative specifications.
13 CHAIRMAN ZECH: DOE wish to comment?
14 MR. BAUBLITZ: We recognize the Energy
15 Authority's position on this and, as I indicated
16 before, we also recognize that it is an issue and
17 questions can be raised. But our position is that we
18 recognize the need for DOE as a whole to be able to
19 deal consistently with the Commission and others in
20 terms of making judgments about the adequacy of the
21 repository for the waste forms. So, we're doing our
22 best to meet the needs of that process while keeping
23 the costs as under control as we can.
24 CHAIRMAN ZECH: Does New York have any
25 further comment?

1 MR. DeBOER: No, sir.

2 CHAIRMAN ZECH: All right.

3 MR. DeBOER: That concludes my formal

4 comments.

5 CHAIRMAN ZECH: Thank you very much.

6 Comments from my fellow Commissioners?

7 Commissioner Roberts?

8 Commissioner Carr?

9 COMMISSIONER CARR: I'm trying to get this

10 thing in perspective. You're running a demonstration

11 project to show that this can be done and,

12 incidentally, get rid of those two tanks of high-level

13 waste, right?

14 MR. DeBOER: That's right.

15 COMMISSIONER CARR: That's one piece of the

16 action and when that's done, you're required to clean

17 it up.

18 MR. DeBOER: Yes.

19 COMMISSIONER CARR: That piece of the

20 action, those two tanks plus the plan, I guess.

21 MR. BAUBLITZ: The general definition has

22 been the things that we used to solidify waste in the

23 first place, which is generally the plan and then the

24 extra facilities that we created to do it.

25 COMMISSIONER CARR: And we will have a place

1 to put that, that part of the cleaned up?

2 MR. BAUBLITZ: Yes. We don't know what it

3 is yet in the sense that we have to go through this

4 analysis and look at alternatives and so forth. We

5 believe technically everything we know right now is

6 that technically an on-site disposal should be

7 sufficient in the technical criteria, but that has to

8 be demonstrated and meet the requirements of the

9 environmental review process.

10 COMMISSIONER CARR: So, it may be the

11 solution to that problem is when you get through you

12 just leave it where it is, depending on what the EIS

13 comes out with?

14 MR. BAUBLITZ: I'm talking about the waste

15 that is created as part of the project.

16 COMMISSIONER CARR: That's what I'm talking

17 about.

18 MR. BAUBLITZ: As opposed to the stuff that

19 was there before.

20 COMMISSIONER CARR: You changed the form of

21 it.

22 MR. BAUBLITZ: Right.

23 COMMISSIONER CARR: And hopefully you'll be

24 able to ship it to a repository, that high-level waste

25 portion of it, the glass. The concrete is low-level

1 waste.

2 MR. BAUBLITZ: Right.

3 COMMISSIONER CARR: And so it may be just as

4 easy to leave it there as it is to ship it, depending

5 on what the EIS comes out with.

6 MR. BAUBLITZ: That's correct.

7 COMMISSIONER CARR: I guess I'm really

8 trying to figure out what kind of a problem we're

9 trying to solve.

10 MR. BAUBLITZ: Certainly one aspect of the

11 problem is dealing effectively with what I would call

12 local community and elected representatives' concerns

13 about what we're doing and how we're doing it. You

14 might appreciate that from the perspective of those

15 that live and represent those that live in the area,

16 their perspective is that the right thing to do is

17 simply get everything that's there now away, out.

18 COMMISSIONER CARR: Completely?

19 MR. BAUBLITZ: Completely.

20 COMMISSIONER CARR: Well, that's objective

21 one.

22 MR. BAUBLITZ: Right. So, the NEPA process

23 essentially provides a vehicle for those kind of

24 concerns to be addressed and dealt with in a formal

25 way, so that if we go through the careful analysis of

1 options and look at the impacts of the alternate
2 options and then come to some formal conclusion in a
3 public arena kind of way to decide, okay, here is
4 exactly what we will do and why.
5 As I said earlier, from a technical point of
6 view, from everything we know right now, there really
7 would be no reason we would not be able to dispose of
8 the low-level waste produced by the project on-site.
9 But it has to meet the muster of that process.
10 COMMISSIONER CARR: Well, even if you take
11 the low-level waste produced by the project and get
12 rid of it somewhere else, plus your high-level waste
13 that you've solidified and get rid of it, plus your
14 concrete and get rid of it, there's still a major
15 problem up there.
16 MR. BAUBLITZ: Yes.
17 COMMISSIONER CARR: That's not part of what
18 we're addressing except we're trying to include it all
19 in the same project now.
20 MR. BAUBLITZ: That's correct. The analysis
21 that's going to go on will include that --
22 COMMISSIONER CARR: But the law is only
23 forcing us to do the first part of this.
24 MR. BAUBLITZ: That's correct.
25 COMMISSIONER CARR: Thanks.

1 MR. JACK: Excuse me, Commissioner. The
2 West Valley Demonstration Project Act only covers the
3 first part of it.
4 COMMISSIONER CARR: That's right.
5 MR. JACK: However, the State of New York,
6 we will have to satisfy the Commission with respect to
7 those portions of the site which are licensed by the
8 Commission but are not part of the project, including
9 the previously disposed of waste in the NRC licensed
10 disposal area. And then we will have to satisfy --
11 COMMISSIONER CARR: You've got two licensed
12 areas up there and we still have to worry about it.
13 MR. JACK: Right. Then we have the state-
14 licenced low-level radioactive disposal facility and
15 we have to satisfy the regulatory concerns over
16 closure of that portion of the site, on the state
17 side. Again, outside, that's not part of the federal
18 objective.
19 COMMISSIONER CARR: So, we've got a lot of
20 hurdles to cross before we're ever going to take that
21 fence down.
22 MR. JACK: That's correct.
23 COMMISSIONER CARR: Okay.
24 CHAIRMAN ZECH: Commissioner Rogers?
25 COMMISSIONER ROGERS: Yes. Maybe you could

1 just clarify something. It's my understanding that
2 the solidified drums have about 30 to 40 nanocuries
3 per gram of actonides in them. Yet the West Valley
4 Demonstration Project Act of 1980 puts a restriction
5 of ten nanocuries per gram on storage on the site.
6 What's your approach to that?
7 MR. BAUBLITZ: Well, there's another part to
8 what the act says about that. It says ten nanocuries
9 per gram or some other limit as prescribed by the
10 Commission. What's currently in process is we're
11 undertaking an analysis of the waste that's being
12 produced that's in this 30 to 40 range and will
13 present to the Commission an analysis that we hope
14 will support disposal at the site of that waste. But
15 that has to be proven.
16 COMMISSIONER ROGERS: But that's not done
17 yet?
18 MR. BAUBLITZ: Correct.
19 COMMISSIONER ROGERS: I see.
20 Mr. DeBoer, I guess. On your February 9th
21 public scoping meeting, did anything come out of that
22 that suggests some new approaches or new questions
23 that had to be dealt with?
24 MR. DeBOER: These are being evaluated by
25 the site operating contractor. I haven't seen any of

1 the results of that yet. I don't think any --

2 MR. BAUBLITZ: There were no surprises, but

3 we haven't completed, I guess, the full resolution of

4 all comments. But there was nothing really new in

5 that, some startling new alternative or a new issue or

6 anything like that.

7 COMMISSIONER ROGERS: Okay. Thank you.

8 COMMISSIONER CARR: Could I ask you what

9 this whole site was set aside for in the first place,

10 this how many hundred acres there were there?

11 MR. DeBOER: 3,345. It was set aside to be,

12 as we understand it, a complete nuclear facility,

13 starting out with fuel reprocessing. And I think

14 there were thoughts of having other nuclear facilities

15 built on the site, like fabrication facilities,

16 although it never got that far. And, going back

17 through the records, there is some indication that

18 people thought it would be a real nuclear park.

19 COMMISSIONER CARR: We haven't violated

20 anybody's original intent when they set this thing

21 aside to be something nuclear, even though they didn't

22 know what it was going to be, I guess. And it's still

23 set aside for that purpose?

24 MR. DeBOER: Yes.

25 COMMISSIONER ROGERS: What's the level of

1 effort of the Westinghouse people on the site and your
2 New York State office on-site and at headquarters?
3 How many people do you have involved and how many
4 people are --
5 MR. THOMAS: Currently approximately 500
6 people.
7 COMMISSIONER ROGERS: 500 people. And the
8 New York State --
9 MR. DeBOER: We have on-site a two person
10 office who work very closely with the Department of
11 Energy's on-site office. Then, in Albany, I have a
12 staff of four.
13 COMMISSIONER ROGERS: Well, do they work
14 just on this?
15 MR. DeBOER: Two of the people in Albany
16 work just on the Demonstration Project and others are
17 part-time, as well as support from counsel and others
18 that are part of the Energy Authority.
19 COMMISSIONER ROGERS: Okay. Thank you.
20 CHAIRMAN ZECH: Thank you very much.
21 Commissioner Curtiss?
22 Mr. DeBoer, are you satisfied with the
23 guidance and support you've received from the NRC
24 staff on this project?
25 MR. DeBOER: The support is primarily

1 directly between the NRC and Department of Energy.

2 CHAIRMAN ZECH: Yes.

3 MR. DeBOER: I've been fully aware of the

4 interaction and the support has been very good.

5 CHAIRMAN ZECH: All right.

6 MR. DeBOER: And the NRC support is very

7 valuable and continued interactions and support in the

8 future I think would be very valuable also.

9 CHAIRMAN ZECH: All right. Fine. Thank

10 you.

11 Well, let me just say, unless there are any

12 questions of my fellow Commissioners, on behalf of the

13 Commission I'd like to thank you, Mr. Baublitz, and

14 you, Mr. DeBoer, and the other gentlemen with you here

15 today for a very useful and informative briefing. The

16 Commission is pleased to hear that the project

17 activities seem to be progressing very satisfactorily.

18 The Commission earlier complimented the

19 Department of Energy for the site-wide approach that

20 they're taking. I think it would also be appropriate

21 for the Commission to compliment the State of New York

22 for their adopting a site-wide approach to this

23 endeavor in addressing the waste disposal and the

24 decommissioning issues and also taking an active role

25 in the preparation of the Environmental Impact

1 Statement. It is encouraging to see a cooperative
2 effort going on on a very important matter like this
3 and to see that progress is being made, even though we
4 recognize that there's still issues to be addressed.
5 I believe that we can be encouraged by the
6 efforts being put forward by the Department of Energy
7 and by the State of New York across the board. And
8 again, I compliment you both for taking what would
9 certainly appear to be a site-wide approach to the
10 whole endeavor.
11 The West Valley Demonstration Project will
12 continue to be of interest to the Commission and we'd
13 urge both the Department of Energy and the State of
14 New York to keep us informed and to bring forward any
15 significant issues that you feel should be brought
16 forward to the Commission regarding the West Valley
17 Project.
18 But thank you very much for a very useful
19 and informative presentation.
20 If there are no other comments from my
21 colleagues, we stand adjourned. Thank you, gentlemen.
22 (Whereupon, at 3:25 p.m., the meeting was
23 adjourned.)
24
25

CERTIFICATE OF TRANSCRIBER

This is to certify that the attached events of a meeting of the United States Nuclear Regulatory Commission entitled:

TITLE OF MEETING: BRIEFING ON STATUS OF WEST VALLEY PROJECT

PLACE OF MEETING: ROCKVILLE, MARYLAND

DATE OF MEETING: MARCH 29, 1989

were transcribed by me. I further certify that said transcription is accurate and complete, to the best of my ability, and that the transcript is a true and accurate record of the foregoing events.

Judy Hadley

Reporter's name: PETER LYNCH

/ 3/29/89

SCHEDULING NOTES

TITLE: BRIEFING ON STATUS OF WEST VALLEY PROJECT

SCHEDULED: 2:00 P.M., WEDNESDAY, MARCH 29, 1989 (OPEN)

DURATION: APPROX 1-1/2 HRS

PARTICIPANTS: DOE — 45 MINS

- JOHN E. BAUBLITZ, ACTING DIRECTOR
  OFFICE OF REMEDIAL ACTION AND WASTE TECHNOLOGY

- DR. JOSEPH A. COLEMAN, DIRECTOR
  DIVISION OF WASTE TREATMENT PROJECTS

- DR. WILLIS W. BIXBY, DIRECTOR
  WEST VALLEY PROJECT OFFICE

- ROY THOMAS, PRESIDENT
  WEST VALLEY NUCLEAR SERVICES
  WESTINGHOUSE ELECTRIC CORPORATION

NEW YORK STATE — 15 MINS

- TED K. DEBOER, DIRECTOR
  RADIOACTIVE WASTE MANAGEMENT PROGRAM
  NEW YORK STATE ENERGY RESEARCH AND DEVELOPMENT AUTHORITY

- HOWARD A. JACK
  GENERAL COUNSEL/SECRETARY
  NEW YORK STATE ENERGY RESEARCH AND DEVELOPMENT AUTHORITY

DEPARTMENT OF ENERGY

WEST VALLEY DEMONSTRATION PROJECT

BRIEFING FOR THE
NUCLEAR REGULATORY COMMISSION

MARCH 29, 1989

JOHN E. BAUBLITZ

WEST VALLEY DEMONSTRATION PROJECT
PROJECT ORGANIZATION

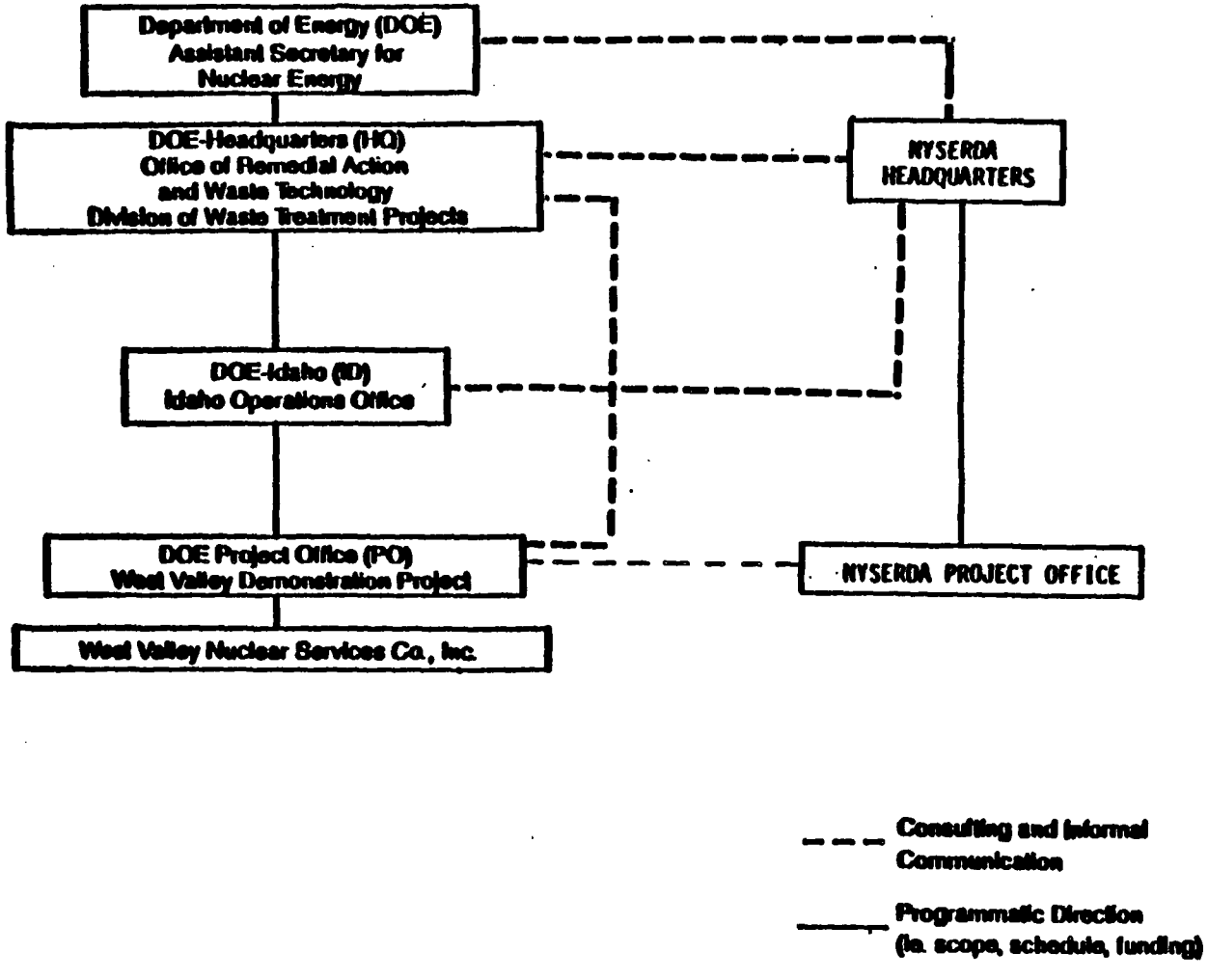

WEST VALLEY HISTORY

1961	NY STATE ACQUIRES 3345 ACRES NEAR WEST VALLEY, NY, FOR THE WESTERN NEW YORK NUCLEAR SERVICE CENTER
1962	NUCLEAR FUEL SERVICES (NFS) REACHED AGREEMENT WITH AEC AND NEW YORK STATE TO CONSTRUCT REPROCESSING PLANT
1966	PLANT CONSTRUCTION COMPLETED
1966-1972	NFS REPROCESSED 640 METRIC TONS OF SPENT NUCLEAR FUEL
1972	PLANT SHUT DOWN FOR MODIFICATIONS/EXPANSION
1973-1975	SPENT NUCLEAR FUEL RECEIVED IN PREPARATION FOR RESUMPTION OF REPROCESSING

WEST VALLEY HISTORY (CONTINUED)

1976	NFS DECIDED TO WITHDRAW FROM REPROCESSING BUSINESS
1980	CONGRESS AUTHORIZED DOE TO CARRY OUT HIGH-LEVEL NUCLEAR WASTE MANAGEMENT DEMONSTRATION
1981	WESTINGHOUSE SELECTED AS OPERATING CONTRACTOR OF WEST VALLEY DEMONSTRATION PROJECT
2/25/82	DOE ASSUMED OPERATIONAL CONTROL OF THE PROJECT PREMISES

WESTERN NEW YORK NUCLEAR SERVICE CENTER 1981

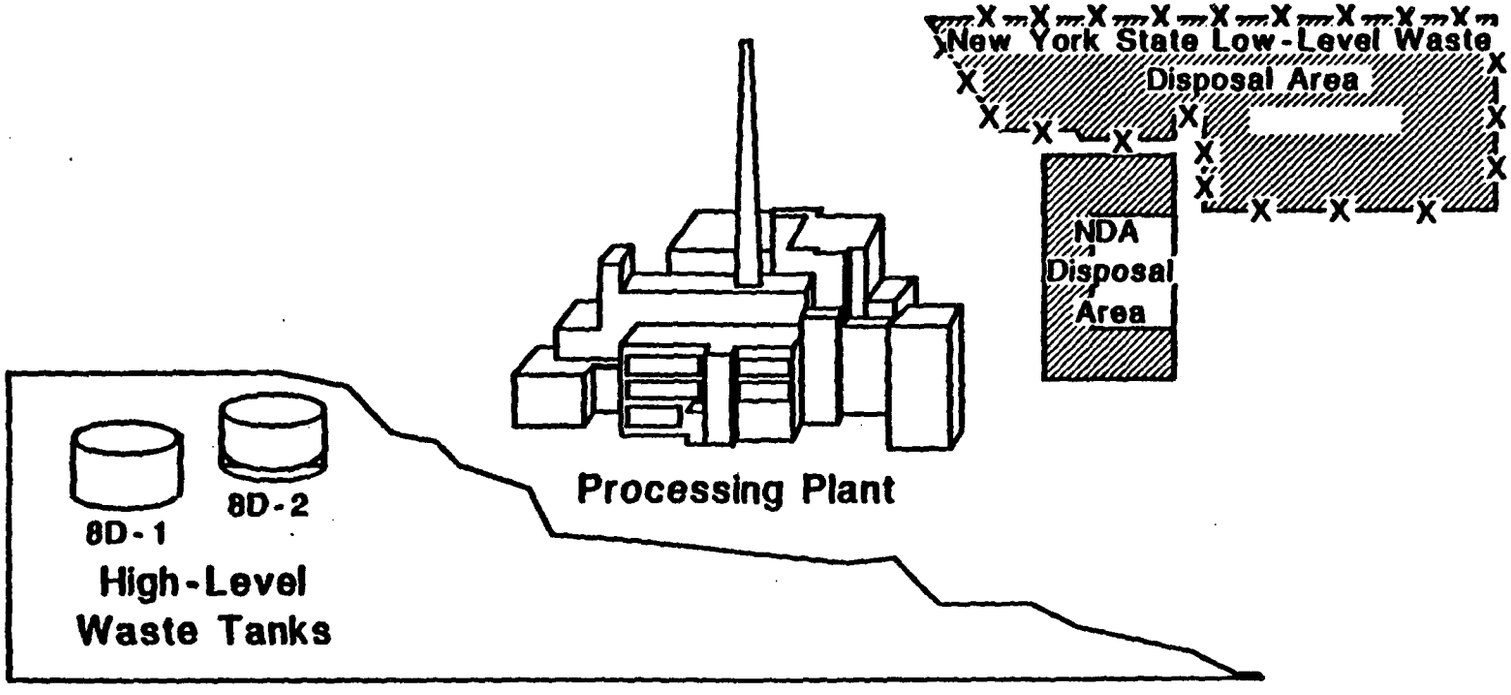

WEST VALLEY DEMONSTRATION PROJECT

GOAL

DEMONSTRATE SOLIDIFICATION AND PREPARATION OF HIGH-LEVEL WASTE FOR PERMANENT DISPOSAL

AUTHORITY

PUBLIC LAW 96-368, WEST VALLEY DEMONSTRATION PROJECT ACT

WEST VALLEY DEMONSTRATION PROJECT

OBJECTIVES

- PHASE I
  - SOLIDIFY LIQUID HIGH-LEVEL WASTE IN A FORM SUITABLE FOR TRANSPORTATION AND DISPOSAL
  - DEVELOP CONTAINERS SUITABLE FOR PERMANENT DISPOSAL
- PHASE II
  - TRANSPORT SOLIDIFIED WASTE TO FEDERAL REPOSITORY FOR PERMANENT DISPOSAL
  - DISPOSE OF LOW-LEVEL AND TRANSURANIC WASTE PRODUCED
  - DECONTAMINATE AND DECOMMISSION TANKS, FACILITIES, MATERIAL, AND HARDWARE USED IN THE PROJECT

WEST VALLEY DEMONSTRATION PROJECT

SCHEDULE

- HIGH-LEVEL WASTE SOLIDIFICATION (PHASE I) TO BE COMPLETE BY END OF FY 1998
- DECONTAMINATION AND DECOMMISSIONING (PHASE II) TO BE COMPLETE APPROXIMATELY FY 2020

IMPLEMENTATION

- ASSIGNED TO WEST VALLEY PROJECT OFFICE AT WEST VALLEY, NEW YORK
- COST SHARING: 90% DOE/10% STATE

NRC ROLE PER PUBLIC LAW 96-368

- o REVIEW AND CONSULTATION ON
  - DOE PLANS FOR HLW REMOVAL, SOLIDIFICATION, AND PREPARATION FOR DISPOSAL
  - DOE PLANS FOR THE DECONTAMINATION OF FACILITIES USED FOR HLW SOLIDIFICATION
  - HLW FORM AND CONTAINERS TO BE USED FOR HLW DISPOSAL
  - SAFETY ANALYSIS REPORTS AND OTHER INFORMATION RELATED TO POTENTIAL HAZARD TO PUBLIC HEALTH AND SAFETY

NRC ROLE PER PUBLIC LAW 96-368 (CONTINUED)

- HAVE ACCESS TO WEST VALLEY SITE TO MONITOR DOE ACTIVITIES
- PRESCRIBE REQUIREMENTS FOR DECONTAMINATION AND DECOMMISSIONING

DOE/NRC MEMORANDUM OF UNDERSTANDING

PURPOSE

ESTABLISH PROCEDURES FOR INFORMAL REVIEW AND CONSULTATION BY NRC

SCOPE

ENCOMPASSES DEVELOPMENT, DESIGN, CONSTRUCTION, OPERATION, DECONTAMINATION AND DECOMMISSIONING ACTIVITIES

RESPONSIBLE PARTIES

DOE - OFFICE OF NUCLEAR ENERGY
- WEST VALLEY PROJECT OFFICE

NRC - OFFICE OF NUCLEAR MATERIAL SAFETY AND SAFEGUARDS
- REGION I, KING OF PRUSSIA

DOE/NRC MEMORANDUM OF UNDERSTANDING

CONTENTS

- PURPOSE AND SCOPE
- RESPONSIBILITIES OF PARTIES
- AGREEMENTS BETWEEN PARTIES
- EFFECTIVE DATE - SEPTEMBER 23, 1981

Phase I

OBJECTIVE

Demonstrate Solidification and Preparation of High-Level Waste for Permanent Disposal

AUTHORITY

Public Law 96-368, West Valley Demonstration Project Act

SCOPE

Solidify Liquid High-Level Waste

Develop Containers

Transport to Federal Repository

Dispose of Low-Level and Transuranic Waste

Decontaminate and Decommission Facilities Used (To Support Solidification)

SOLIDIFICATION OF HIGH-LEVEL WASTE

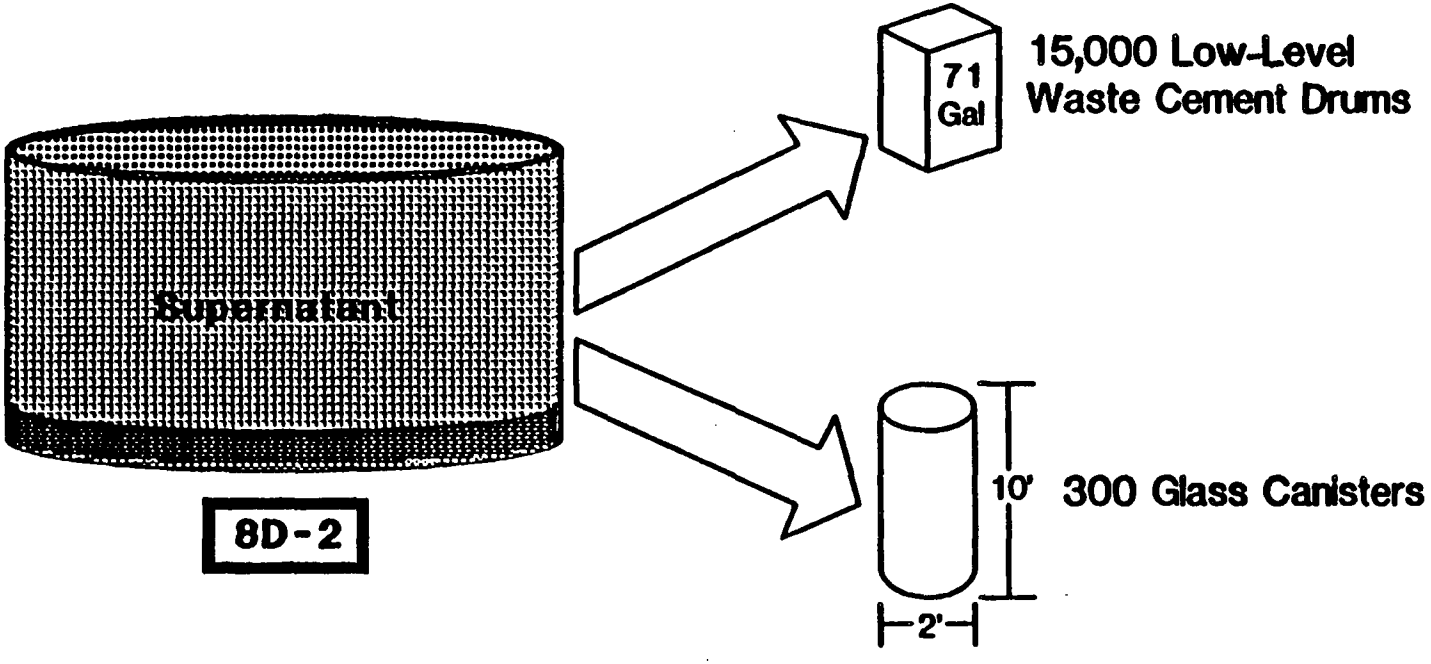

PROCESS OVERVIEW

Low-Level Waste Processing Cycle

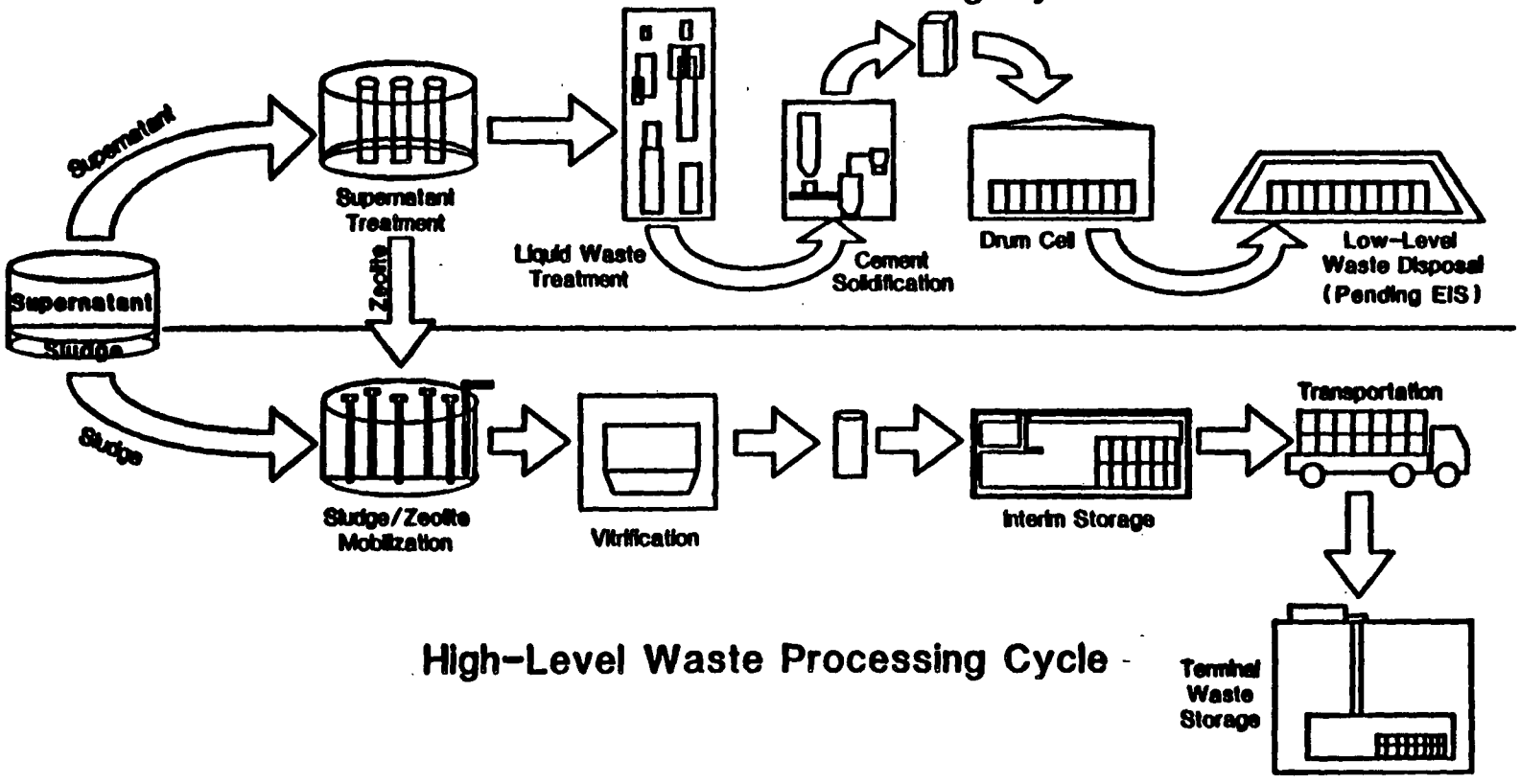

High-Level Waste Processing Cycle

WEST VALLEY DEMONSTRATION PROJECT

SUPERNATANT PROCESSING EXPERIENCE

- PROCESSING INITIATED MAY 23, 1988
- DF OF 5,000 UP TO 150,000 ACHIEVED
- PRODUCT ACCEPTANCE RATE 99.93%
- DRUM DOSE RATES UP TO 70 MREM/HR VS. 700 MREM/HR DESIGN
- NRC STAFF AGREEMENT ON WASTE FORM
- AS OF MARCH 10, 1989
  - 152,000 GALLONS PROCESSED
  - 2,914 CEMENT DRUMS PRODUCED

WEST VALLEY DEMONSTRATION PROJECT

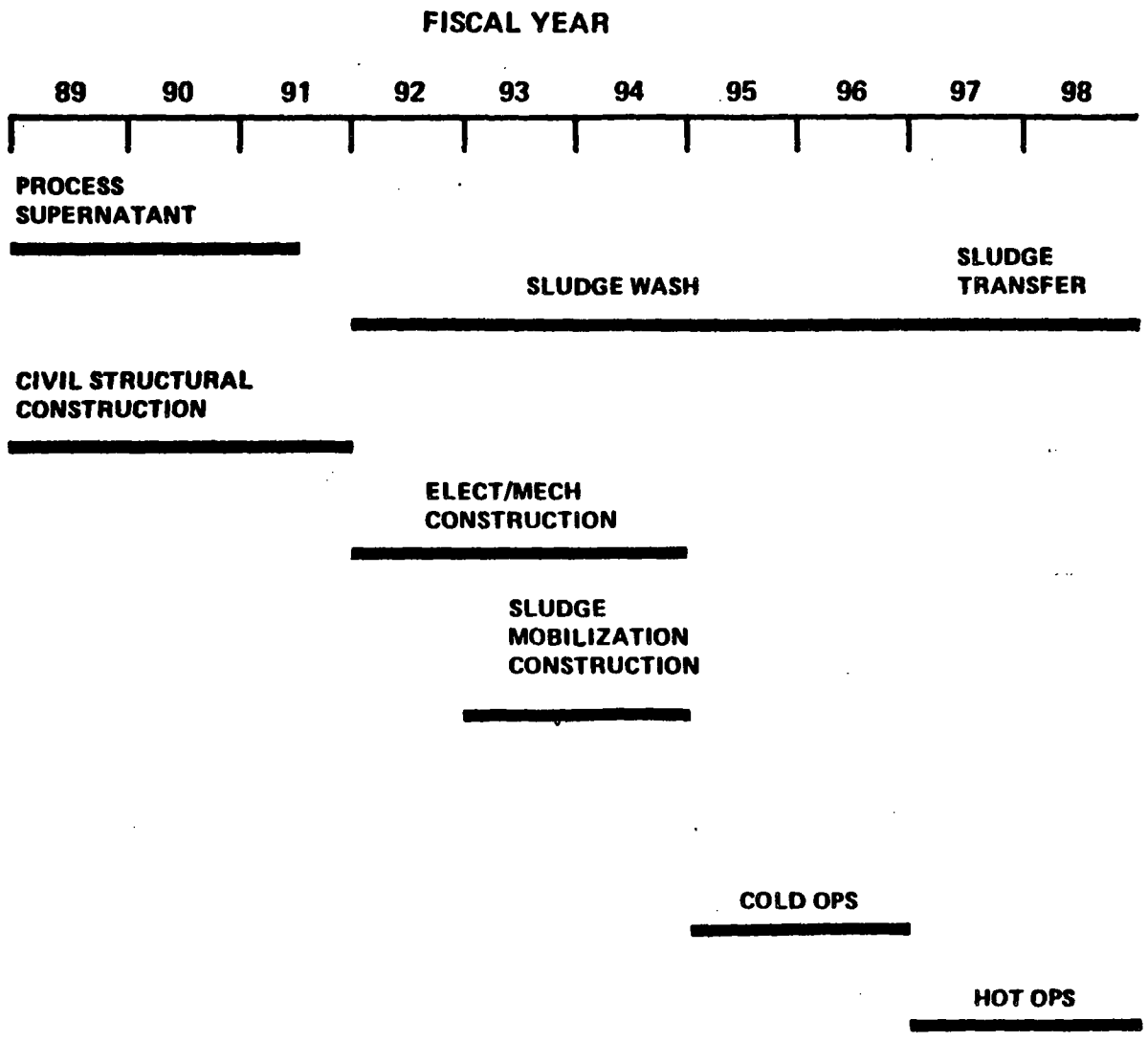

WASTE ACCEPTANCE PROCESS

- DOE REPOSITORY PROGRAM ESTABLISHES WASTE ACCEPTANCE PRELIMINARY SPECIFICATIONS (WAPS)
- WASTE FORM PRODUCERS DEVELOP, PRODUCE, AND CHARACTERIZE THE HIGH-LEVEL WASTE FORMS TO MEET WAPS
  - WASTE FORM COMPLIANCE PLAN
  - WASTE QUALIFICATION REPORT
  - PRODUCTION RECORDS
- REPOSITORY PROGRAM EVALUATES WASTE FORM AS PART OF SITE CHARACTERIZATION TO ESTABLISH SUITABILITY FOR LICENSING
  - REPOSITORY LICENSE
- WASTE CANISTERS AND PRODUCTION RECORDS ARE PROVIDED TO REPOSITORY PROGRAM UPON ACCEPTANCE FOR DISPOSAL

PHASE II

OBJECTIVE

Demonstrate Solidification And Preparation Of High-Level Waste For Permanent Disposal

AUTHORITY

Public Law 96-368, West Valley Demonstration Project Act

SCOPE

Solidify Liquid High-Level Waste

Develop Containers

Transport To Federal Repository

Dispose Of Low-Level And Transuranic Waste

Decontaminate and Decommission Facilities Used

WEST VALLEY DEMONSTRATION PROJECT

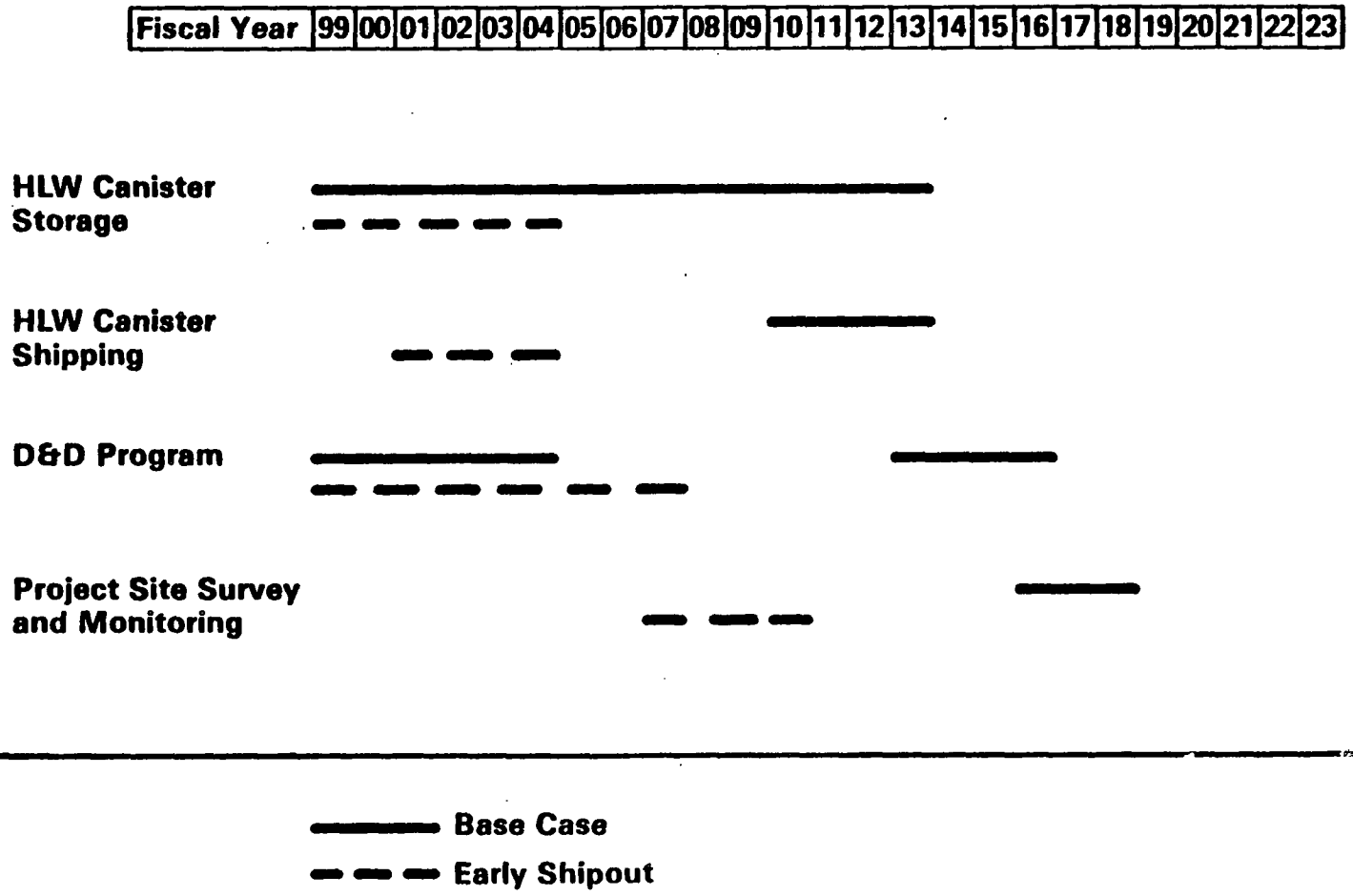

Phase II

PHASE II EIS

- FEDERAL REGISTER NOTICE OF INTENT ISSUED DECEMBER 30, 1988
- EIS WILL ADDRESS
  - PROJECT COMPLETION (FEDERAL AND STATE DECISION-MAKING)
  - CENTER CLOSURE (STATE DECISION-MAKING)
- DOE AND NYSERDA WILL COOPERATE IN EIS PREPARATION
- DOE IS LEAD FEDERAL AGENCY FOR NEPA COMPLIANCE
- NYSERDA IS LEAD STATE AGENCY FOR SEQRA COMPLIANCE
- PUBLIC SCOPING MEETINGS HELD FEBRUARY 9, 1989 IN SPRINGVILLE, NY

PHASE II EIS

PRIMARY ITEMS TO BE EVALUATED FOR FEDERAL AND STATE DECISION-MAKING

- BUILDINGS, STRUCTURES, AND SYSTEM COMPONENTS
  - FORMER REPROCESSING PLANT TOGETHER WITH THE NEWLY INSTALLED SYSTEMS
  - HLW STORAGE TANKS AND VAULTS
  - SUPERNATANT TREATMENT SYSTEM
  - HLW VITRIFICATION FACILITY
  - MISCELLANEOUS AUXILIARY STRUCTURES AND SYSTEMS

PHASE II EIS

PRIMARY ITEMS TO BE EVALUATED FOR FEDERAL AND STATE DECISION-MAKING (CONT)

- SOLID AND LIQUID WASTE MANAGEMENT OR DISPOSAL UNITS
  - RADIOACTIVE WASTE STORAGE STRUCTURES
  - STORED SOLIDIFIED HLW, LLW, AND TRU WASTE
  - PORTION OF NDA USED FOR PROJECT WASTE
  - ORIGINAL LOW-LEVEL LIQUID WASTE TREATMENT FACILITY

PHASE II EIS

PROPOSED ALTERNATIVES

- o DECONTAMINATION, DECOMMISSIONING AND CLOSURE
  - PRIMARY BUILDINGS, STRUCTURES AND SYSTEMS
    - -- DECONTAMINATION FOR UNRESTRICTED USE
    - -- DECONTAMINATION AND SEALING FOR RESTRICTED ACCESS, SURVEILLANCE AND SITE MONITORING
    - -- DECONTAMINATION, DEMOLITION AND IN SITU DISPOSAL
    - -- DECONTAMINATION, DEMOLITION AND OFF-SITE DISPOSAL
    - -- NO ACTION, RESTRICTED ACCESS, SURVEILLANCE AND SITE MONITORING

PHASE II EIS

PROPOSED ALTERNATIVES

DECONTAMINATION, DECOMMISSIONING AND CLOSURE (CONT)

- o SOLID AND LIQUID WASTE MANAGEMENT OR DISPOSAL UNITS
  - STABILIZATION AND CLOSURE
  - EXHUMATION, REPACKAGING AND DISPOSAL
  - NO ACTION, RESTRICTED ACCESS, SURVEILLANCE AND SITE MONITORING

PHASE II EIS

PROPOSED ALTERNATIVES

DISPOSAL OF RADIOACTIVE WASTE OTHER THAN HLW

- ON-SITE DISPOSAL
- OFF-SITE DISPOSAL
- INTERIM STORAGE PENDING AVAILABILITY OF DISPOSAL CAPACITY
- NO ACTION, RESTRICTED ACCESS, SURVEILLANCE AND SITE MONITORING

PHASE II EIS

PROPOSED ALTERNATIVES

TRANSPORTATION FOR DISPOSAL OF THE STORED HLW

- EARLY SHIPOUT TO AN INTERIM STORAGE SITE
- ON-SITE STORAGE AWAITING AVAILABILITY OF A LICENSED REPOSITORY
- NO ACTION, RESTRICTED ACCESS, SURVEILLANCE AND SITE MONITORING

KEY AREAS OF NRC INVOLVEMENT

- o INTEGRATED RADWASTE TREATMENT SYSTEM
  - PERIODIC PRODUCT QUALITY REVIEWS
  - LONG-TERM CEMENT PERFORMANCE REVIEWS
- o LOW-LEVEL WASTE STORAGE AND DISPOSAL
  - CRITERIA FOR CLOSURE OF WEST VALLEY PROJECT (I.E., D&D CRITERIA)
  - EVALUATION OF WEST VALLEY APPROACH FOR LLW AND TRU DISPOSITION

KEY AREAS OF NRC INVOLVEMENT (CONTINUED)

- o SLUDGE MOBILIZATION SYSTEM
  - PREPARATION OF SAFETY EVALUATION REPORT PRIOR TO HOT OPERATION
- o VITRIFICATION
  - CONSULTATION ON FINAL WASTE FORM
  - PREPARATION OF SAFETY EVALUATION REPORTS PRIOR TO HOT OPERATIONS
- o WASTE TRANSPORTATION
  - CASK CERTIFICATION
- o MONITOR DOE ON-SITE ACTIVITIES