PRM-50-111

Docketed
Office of the Secretary
USNRC
March 23, 2015

March 13, 2015

Annette L. Vietti-Cook
Secretary
U.S. Nuclear Regulatory Commission
Washington, DC 20555-0001

Attention: Rulemakings and Adjudications Staff

PETITION FOR RULEMAKING

TABLE OF CONTENTS

Appendix A Figure 1-1, Cross Section of a Gamma Thermometer

Appendix B Table 7A-2, Worldwide Experience with Gamma Thermometers

Appendix C Figure 7.2-8, Axial Distribution of LPRM Detectors

Appendix D Figure 7.2-7, LPRM Locations in the Core

Annette L. Vietti-Cook
Secretary
U.S. Nuclear Regulatory Commission
Washington, DC 20555-0001

Attention: Rulemakings and Adjudications Staff

PETITION FOR RULEMAKING

I. NEEDED REGULATION

This petition for rulemaking is submitted pursuant to 10 C.F.R. § 2.802 by Mark Edward Leyse (hereinafter "Petitioner").

Petitioner requests that the United States Nuclear Regulatory Commission ("NRC") require all holders of operating licenses for nuclear power plants ("NPP") to operate NPPs with in-core temperature-monitoring devices (for example, thermoacoustic sensors[1] or thermocouples[2]) located at different elevations and radial positions throughout the reactor core in order to enable NPP operators to accurately measure a large range of in-core temperatures in steady-state and transient conditions.

In the event of a severe accident, in-core temperature-monitoring devices would enable NPP operators to accurately measure in-core temperatures, providing crucial information to help them track the progression of core damage and manage the accident; for example, indicating the correct time to transition from emergency operating procedures ("EOP") to implementing severe accident management guidelines ("SAMG").

Imposing a regulation that required improvements in monitoring in-core temperatures could actually increase the electrical production of NPPs. According to Michael Heibel, a technical program manager at Westinghouse, in steady-state conditions, thermoacoustic sensors—in-core temperature-monitoring devices—would enable NPP operators "to monitor the core much more accurately, allowing them to produce more electricity from the same amount of uranium."[3] And according to a 2013 Idaho National Laboratory ("INL") report, "[i]ntegrating [thermoacoustic] sensor systems

[1] Thermoacoustic sensors are passive temperature measuring devices that do not require wiring or vessel penetrations.
[2] Thermocouples are temperature measuring devices.
[3] World Nuclear News, "Westinghouse to market fuel rod sensors by 2019," June 20, 2014. The quote from the article is attributed to statements of Michael Heibel, a technical program manager at Westinghouse.

along with the existing nuclear reactor instrumentation can prove to be a significant benefit for the nuclear industry."[4]

(This 10 C.F.R. § 2.802 petition for rulemaking is similar to a petition that Petitioner submitted, dated February 28, 2012, which NRC docketed as PRM-50-105.[5] This petition requests that temperature-monitoring devices be employed to accurately measure in-core temperatures (the type of device to be employed is not specified; albeit, thermoacoustic sensors and thermocouples are proposed as candidates), whereas PRM-50-105 *specifically* requested that thermocouples be employed for the task. This current petition discusses significant information not covered in PRM-50-105.)

II. STATEMENT OF PETITIONER'S INTEREST

On March 15, 2007, Petitioner submitted a 10 C.F.R. § 2.802 petition for rulemaking, PRM-50-84,[6] to NRC. PRM-50-84 requested: 1) that NRC make new regulations to help ensure licensees' compliance with 10 C.F.R. § 50.46(b) emergency core cooling systems ("ECCS") acceptance criteria and 2) to amend Appendix K to Part 50—ECCS Evaluation Models I(A)(1), "The Initial Stored Energy in the Fuel."

In 2008, NRC decided to consider the issues raised in PRM-50-84 in its rulemaking process.[7] And in 2009, NRC published "Performance-Based Emergency Core Cooling System Acceptance Criteria," which gave advanced notice of a proposed rulemaking, addressing four objectives: the fourth being the issues raised in PRM-50-84.[8] In 2012, the NRC Commissioners voted unanimously to approve a proposed rulemaking—revisions to Section 50.46(b), which will become Section 50.46(c)—that was partly based on the safety issues Petitioner raised in PRM-50-84.[9]

---

[4] James A. Smith, Dale K. Kotter, Idaho National Laboratory, "Synergistic Smart Fuel for In-Pile Nuclear Reactor Measurements," INL/CON-13-28098, October 2013.
[5] Mark Leyse, PRM-50-105, February 28, 2012 (ADAMS Accession No. ML12065A215).
[6] Mark Leyse, PRM-50-84, March 15, 2007 (ADAMS Accession No. ML070871368).
[7] Federal Register, Vol. 73, No. 228, "Mark Edward Leyse; Consideration of Petition in Rulemaking Process," November 25, 2008, pp. 71564-71569.
[8] Federal Register, Vol. 74, No. 155, "Performance-Based Emergency Core Cooling System Acceptance Criteria," August 13, 2009, pp. 40765-40776.
[9] NRC, Commission Voting Record, Decision Item: SECY-12-0034, Proposed Rulemaking—10 CFR 50.46(c): Emergency Core Cooling System Performance During Loss-of-Coolant Accidents (RIN 3150-AH42), January 7, 2013, (ADAMS Accession No. ML13008A368).

Petitioner also coauthored a paper, "Considering the Thermal Resistance of Crud in LOCA Analysis," which was presented at the American Nuclear Society's 2009 Winter Meeting.[10]

Petitioner is submitting this 10 C.F.R. § 2.802 petition for rulemaking to NRC because it would help improve public and plant-worker safety if NPPs were required to operate with in-core temperature-monitoring devices (for example, thermoacoustic sensors or thermocouples) located at different elevations and radial positions throughout the reactor core in order to enable NPP operators to accurately measure a large range of in-core temperatures in steady-state and transient conditions. In the event of a severe accident, in-core temperature-monitoring devices would enable NPP operators to accurately measure in-core temperatures, providing crucial information to help them track the progression of core damage and manage the accident; for example, indicating the correct time to transition from EOPs to implementing SAMGs.

Imposing a regulation that required improvements in monitoring in-core temperatures could actually increase the electrical production of NPPs. According to Michael Heibel, a technical program manager at Westinghouse, in steady-state conditions, thermoacoustic sensors—in-core temperature-monitoring devices—would enable NPP operators "to monitor the core much more accurately, allowing them to produce more electricity from the same amount of uranium."[11] And according to a 2013 INL report, "[i]ntegrating [thermoacoustic] sensor systems along with the existing nuclear reactor instrumentation can prove to be a significant benefit for the nuclear industry."[12]

It is apparent that thermoacoustic sensors would be superior to thermocouples for accurately measuring a large range of in-core temperatures in steady-state and transient conditions, because they are passive devices that have no moving parts and do not require wiring or vessel penetrations in the reactor core.

---

[10] Rui Hu, Mujid S. Kazimi, Mark E. Leyse, "Considering the Thermal Resistance of Crud in LOCA Analysis," American Nuclear Society, 2009 Winter Meeting, Washington, D.C., November 15-19, 2009.

[11] World Nuclear News, "Westinghouse to market fuel rod sensors by 2019," June 20, 2014. The quote from the article is attributed to statements of Michael Heibel, a technical program manager at Westinghouse.

[12] James A. Smith, Dale K. Kotter, Idaho National Laboratory, "Synergistic Smart Fuel for In-Pile Nuclear Reactor Measurements," INL/CON-13-28098, October 2013.

III. BACKGROUND INFORMATION

III.A. The Need for Nuclear Power Plants to Operate with In-Core Temperature-Monitoring Devices Located at Different Elevations and Radial Positions throughout the Reactor Core

In October 1979, the President's Commission on the Three Mile Island accident recommended that:

> Equipment should be reviewed from the point of view of providing information to operators to help them prevent accidents and to cope with accidents when they occur. Included might be instruments that can provide proper warning and diagnostic information; for example, *the measurement of the full range of temperatures within the reactor vessel under normal and abnormal conditions*[13] [emphasis added].

In the last three-and-a-half decades, NRC has not implemented any regulations requiring that NPPs operate with in-core temperature-monitoring devices (for example, thermoacoustic sensors or thermocouples) located at different elevations and radial positions throughout the reactor core in order to enable NPP operators to accurately measure a large range of in-core temperatures in steady-state and transient conditions, which would help fulfill the 1979 President's Commission's recommendations. If another severe accident were to occur in the United States, NPP operators would not know what the in-core temperatures were during the progression of the accident. In a severe accident at a pressurized water reactor ("PWR"), core-exit thermocouples would be the primary tool that was used to detect inadequate core cooling and core uncovery.

(Boiling water reactors ("BWR")—discussed in Section III.A.1 of this petition—do not rely on core-exit thermocouples to detect inadequate core cooling and core uncovery.)

In a PWR severe accident, in many cases, a predetermined core-exit temperature measurement (*e.g.*, 1200°F) would be used to signal the time for NPP operators to transition from EOPs to implementing SAMGs. For example, Westinghouse's probabilistic risk assessment for the AP1000 states:

> As the core-exit gas temperature increases above 1200 degrees [Fahrenheit], the EOPs transition to a red path indicating inadequate core

[13] John G. Kemeny *et al.*, "Report of the President's Commission on the Accident at Three Mile Island: The Need for Change: The Legacy of TMI," October 1979, p. 72.

> cooling (FR-C.1). Upon entry into FR-C.1, the control room staff initiates actions to mitigate a severe accident by turning on the hydrogen igniters for hydrogen control and flooding the reactor cavity to prevent reactor pressure vessel failure.[14]

The problem with using a predetermined core-exit temperature measurement to signal the time for PWR operators to transition from EOPs to implementing SAMGs is that experimental data demonstrates that core-exit temperature ("CET") measurements have significant limitations: 1) "[t]he use of the CET measurements has limitations in detecting inadequate core cooling and core uncovery;" 2) "[t]he CET indication displays in all cases a significant delay (up to several 100 [seconds]);" and 3) "[t]he CET reading is always significantly lower (up to several 100 [Kelvin]) than the actual maximum cladding temperature."[15]

Furthermore, in a severe accident experiment, the LOFT LP-FP-2 experiment, in which maximum fuel cladding temperatures exceeded 3308°F, the melting point of Zircaloy,[16] there was a time period that the measured CET was more than 2000°F lower than the maximum measured fuel cladding temperatures.[17] The substantial temperature differences of more than 2000°F between the measured CETs and maximum measured fuel cladding temperatures observed in LOFT LP-FP-2 indicate the magnitude that such temperature differences could be in an actual PWR severe accident.

Unfortunately, despite the fact that "the nuclear industry developed SAMGs during the 1980s and 1990s in response to the [Three Mile Island] accident and followup activities," which "included extensive research and study (including several [probabilistic risk assessments]) on severe accidents and severe accident phenomena,"[18] NRC and the

---

[14] Westinghouse, "AP1000 Design Control Document," Rev. 19, Tier 2 Material, Chapter 19, "Probabilistic Risk Assessment," Appendix 19D, "Equipment Survivability Assessment," June 13, 2011, (ADAMS Accession No. ML11171A416), p. 19D-3.

[15] Robert Prior *et al*., OECD Nuclear Energy Agency, Committee on the Safety of Nuclear Installations, "Core Exit Temperature (CET) Effectiveness in Accident Management of Nuclear Power Reactor," NEA/CSNI/R(2010)9, November 26 2010, p. 128.

[16] NRC, "Feasibility Study of a Risk-Informed Alternative to 10 CFR 50.46, Appendix K, and GDC 35," June 2001, (ADAMS Accession No. ML011800519), p. 3-1.

[17] Robert Prior *et al*., "Core Exit Temperature (CET) Effectiveness in Accident Management of Nuclear Power Reactor," pp. 49-50.

[18] Charles Miller *et al*., NRC, "Recommendations for Enhancing Reactor Safety in the 21st Century: The Near-Term Task Force Review of Insights from the Fukushima Dai-ichi Accident," SECY-11-0093, July 12, 2011, (ADAMS Accession No. ML111861807), p. 47.

nuclear industry have ignored experimental data demonstrating that CET measurements have significant limitations. And ignored the 1979 President's Commission's recommendations that NPPs have "instruments that can provide proper warning and diagnostic information; for example, the measurement of the full range of temperatures within the reactor vessel under normal and abnormal conditions."[19]

III.A.1. Boiling Water Reactors Need to Operate with In-Core Temperature-Monitoring Devices

Core-exit thermocouples are not installed in BWRs.[20] In the event of a severe accident, BWR plant operators are supposed to detect inadequate core cooling and core uncovery by measuring the water level in the reactor core. However, after the onset of core damage, BWR water level measurements are unreliable; and can read erroneously high in low-pressure accidents, like large-break LOCAs, and when there are high drywell temperatures.[21] Furthermore, the Fukushima Daiichi accident demonstrated that BWR water level measurements are unreliable: as the accident progressed, plant operators did not know the actual condition of the reactor cores of Units 1, 2, and 3.

In a December 2011 article, Salomon Levy—a former manager at General Electric, well versed in BWR heat transfer and fluid flow phenomena[22]—stated his opinion that in the Fukushima Dai-ichi accident, plant operators should have recognized that measurements of the water level in the reactor core were unreliable and that reactor and containment pressures as well as the wetwell water temperature would be better indicators of the state of the core.[23] According to Levy, "[t]he reactor and the containment pressures will rise faster when hydrogen is produced. Increased reactor and

---

[19] John G. Kemeny *et al*., "Report of the President's Commission on the Accident at Three Mile Island: The Need for Change: The Legacy of TMI," October 1979, p. 72.
[20] IAEA, "Generic Assessment Procedures for Determining Protective Actions during a Reactor Accident," IAEA-TECDOC-955, August 1997, p. 25.
[21] *Id*., p. 26.
[22] Salomon Levy, "How Would U.S. Units Fare?," Nuclear Engineering International, December 7, 2011. The journal states that "Dr. Levy was the manager responsible for General Electric (GE) BWR heat transfer and fluid flow and the analyses and tests to support [GE's] nuclear fuel cooling during normal, transient, and accident analyses from 1959 to 1977."
[23] In his article, Levy makes a point of qualifying that his observations are not intended to be criticisms of the actions of the Fukushima Dai-ichi plant operators.

containment pressure rates and wetwell [water] temperature rises confirm accelerated core melt."[24]

In his article, Levy concludes "that formation of hydrogen and the acceleration in the rate of its formation need to be forecasted and detected to shift top priority to reactor water addition and to assure its success."[25] The problem with what Levy suggests is simply that by the time operators *confirmed an accelerated core melt*—by measuring increased reactor and containment pressure rates and/or wetwell water temperature rises—the reactor core would already be overheated; and reflooding an overheated core could generate explosive hydrogen gas, at rates as high as 5.0 kg per second.[26]

It is clear that in the event of a BWR severe accident, in-core temperature-monitoring device measurements would be more accurate and immediate for detecting inadequate core cooling and core uncovery than readings of the reactor water level, reactor pressure, containment pressure, or wetwell water temperature.

III.A.2. In-Core Temperature-Monitoring Devices Would Satisfy the Near-Term Task Force Report on Insights from the Fukushima Dai-ichi Accident Recommendations for Enhanced Reactor Instrumentation

An April 2012 Advisory Committee on Reactor Safeguards ("ACRS") report states that "NRC has recognized the need for enhanced reactor…instrumentation and is in the process of adding this to the implementation of the [Near-Term Task Force report on insights from the Fukushima Dai-ichi accident] recommendations."[27] And the Near-Term Task Force report "recommends strengthening and integrating onsite emergency response capabilities such as EOPs [and] SAMGs;"[28] the April 2012 ACRS report states

---

[24] Salomon Levy, "How Would U.S. Units Fare?," Nuclear Engineering International, December 7, 2011.
[25] *Id*.
[26] E. Bachellerie *et al*., "Generic Approach for Designing and Implementing a Passive Autocatalytic Recombiner PAR-System in Nuclear Power Plant Containments," Nuclear Engineering and Design, 221, 2003, p. 158.
[27] ACRS, "Review and Evaluation of the Nuclear Regulatory Commission Safety Research Program: A Report to the U.S. Nuclear Regulatory Commission," NUREG-1635, Vol. 10, April 2012, p. 12.
[28]Charles Miller *et al*., NRC, "Recommendations for Enhancing Reactor Safety in the 21st Century: The Near-Term Task Force Review of Insights from the Fukushima Dai-ichi Accident," SECY-11-0093, July 12, 2011, (ADAMS Accession No. ML111861807), pp. ix, 49, 69.

that "[s]uch integration could focus on the need to clarify the transition points;"[29] that would occur in an NPP accident; for example, *the point* at which NPP operators should *transition* from EOPs to implementing SAMGs.

In-core temperature-monitoring devices—which would measure temperatures at different elevations and radial positions throughout the reactor core under accident conditions—would fulfill the need for enhanced reactor instrumentation, providing NPP operators with crucial information to help them track the progression of core damage and manage an accident—also fulfilling the recommendation to "clarify the transition points."

Furthermore, the NRC's Near-Term Task Force report states that "a new and dedicated portion of the regulations would allow the Commission to recharacterize its expectations for safety features beyond design basis more clearly and more positively as 'extended design-basis' requirements."[30] Clearly, a new regulation is needed requiring that a wide range of in-core temperatures be accurately measured in the event of a severe accident.

III.B. NRC Does Not Consider that Experimental Data Indicates that Core-Exit Temperature Measurements Would Not Be an Adequate Indicator for Detecting Inadequate Core Cooling and Core Uncovery in a PWR Severe Accident

In July 2011, NRC's Near-Term Task Force, established in response to the Fukushima Dai-ichi Accident, stated that "EOPs typically cover accidents to the point of loss of core cooling and initiation of inadequate core cooling (*e.g.*, core exit temperatures in PWRs greater than 649 degrees Celsius (1200 degrees Fahrenheit))."[31] An example of this is Westinghouse's probabilistic risk assessment for the AP1000, which states that in the event of a severe accident, as the CET exceeds 1200°F, "the control room staff initiates

[29] ACRS, "Review and Evaluation of the Nuclear Regulatory Commission Safety Research Program: A Report to the U.S. Nuclear Regulatory Commission," NUREG-1635, p. 11.
[30] Charles Miller *et al.*, NRC, "Recommendations for Enhancing Reactor Safety in the 21st Century: The Near-Term Task Force Review of Insights from the Fukushima Dai-ichi Accident," SECY-11-0093, July 12, 2011, (ADAMS Accession No. ML111861807), p. 22.
[31] Charles Miller *et al.*, "Recommendations for Enhancing Reactor Safety in the 21st Century: The Near-Term Task Force Review of Insights from the Fukushima Dai-ichi Accident," p. 47.

actions to mitigate a severe accident," such as, "flooding the reactor cavity to prevent reactor pressure vessel failure."[32]

Unfortunately, NRC and Westinghouse do not consider that experimental data from tests conducted at four facilities indicates that CET measurements would not be an adequate indicator for when to transition from EOPs to implementing SAMGs in a PWR severe accident.[33]

Regarding 13 common conclusions made from the evaluation of tests conducted in four facilities (LOFT, PKL, ROSA/LSTF, and PSB-VVER) on CET measurements, an OECD Nuclear Energy Agency report, "Core Exit Temperature (CET) Effectiveness in Accident Management of Nuclear Power Reactor," published in August 2010, states:

> 1) The use of the CET measurements has limitations in detecting inadequate core cooling and core uncovery.
>
> 2) The CET indication displays in all cases a significant delay (up to several 100 [seconds]).
>
> 3) The CET reading is always significantly lower (up to several 100 [Kelvin]) than the actual maximum cladding temperature.
>
> 4) CET performance strongly depends on the accident scenarios and the flow conditions in the core.
>
> 5) The CET reading depends on water fall-back from the upper plenum (due to; *e.g.*, reflux condensing [steam generator] mode or water injection) and radial core power profiles. During significant water fall-back the heat-up of the CET sensor could even be prevented.
>
> 6) The colder upper part of the core and the cold structures above the core are contributing to the temperature difference between the maximum temperature in the core and the CET reading.
>
> 7) The steam velocity through the bundle is a significant parameter affecting CET performance.
>
> 8) Low steam velocities during core boil-off are typical for [small-break loss-of-coolant accident] transients and can advance 3D flow effects.

---

[32] Westinghouse, "AP1000 Design Control Document," Rev. 19, Tier 2 Material, Chapter 19, "Probabilistic Risk Assessment," Appendix 19D, "Equipment Survivability Assessment," p. 19D-3.

[33] Robert Prior *et al.*, "Core Exit Temperature (CET) Effectiveness in Accident Management of Nuclear Power Reactor," pp. 128-129.

> 9) In the core as well as above (*i.e.*, at the CET measurement level) a radial temperature profile is always measured (*e.g.*, due to radial core power distribution and additional effects of core barrel and heat losses).
>
> 10) Also at low pressure (*i.e.*, shut down conditions) pronounced delays and temperature differences are measured, which become more important with faster core uncovery and colder upper structures.
>
> 11) Despite the delay and the temperature difference, the CET reading in the center reflects the cooling conditions in the core.
>
> 12) Any kind of [accident management] procedures using the CET indication should consider the time delay and the temperature difference of the CET behavior.
>
> 13) In due time after adequate core cooling is re-established in the core the CET reading corresponds to no more than the saturation temperature.[34]

(The LOFT facility was an actual nuclear reactor that was 1/50th the volume of a full-size PWR, "designed to represent the major component and system response of a commercial PWR."[35])

Regarding "two general limitations [that] have been identified regarding the ability of core exit fluid [thermocouples] to monitor a core uncovery"[36] in four tests conducted in the LOFT facility, NUREG/CR-3386, "Detection of Inadequate Core Cooling with Core Exit Thermocouples: LOFT PWR Experience" published in November 1983, states:

> First, there was a delay between the core uncovery and the [thermocouple] response. This delay ranged from 28 to 182 [seconds] in the four LOFT LOCA simulations [discussed in this report], and could have been even longer in one case, had the reactor operators not initiated core reflood. The delay is judged to be caused by a film of water that coats the [thermocouple] and must be removed before the [thermocouple] can respond to the vapor superheat. The film of water exists due to slow drainage of liquid from the upper plenum. Although the magnitude of these delays is acceptable under the controlled conditions in the LOFT

---

[34] *Id*.

[35] T. J. Haste, B. Adroguer, N. Aksan, C. M. Allison, S. Hagen, P. Hofmann, V. Noack, Organisation for Economic Co-Operation and Development, "Degraded Core Quench: A Status Report," August 1996, p. 13.

[36] James P. Adams, Glenn E. McCreery, "Detection of Inadequate Core Cooling with Core Exit Thermocouples: LOFT PWR Experience," NUREG/CR-3386, EGG-2260, November 1983, p. 13.

> system, these delay times may differ in commercial systems and should be accounted for in the use of core exit [thermocouple] response to predict or measure [inadequate core cooling ("ICC")]. Since it is expected that ICC will initiate in the hottest core regions, any delay or inadequacy in measuring the temperature of these regions must be considered when analyzing potential methods for ICC detection.
>
> Second, the measured core exit [thermocouple] response was several hundred Kelvin lower than the maximum cladding temperatures in the core. This temperature difference results from the vapor superheat at the core exit being limited by the cladding temperatures near the core exit. In the LOFT system, these cladding temperatures were up to 360 K (648°F) lower than those in the high-power regions near the core center.
>
> In conclusion, any procedure that relies on the response of core exit fluid [thermocouples] to monitor a core uncovery should take these two limitations into account. There may be accident scenarios in which these [thermocouples] would not detect inadequate core cooling that preceded core damage.[37]

The four tests performed in the LOFT facility discussed in the quote above were the LOFT L2-5, L3-6/L8-1, L5-1, and L8-2 tests, which had maximum fuel cladding temperatures of 1479°F, 687°F, 828°F, and 1317°F, respectively.[38] The maximum fuel cladding temperatures in these four tests were more than 700°F below NRC's maximum fuel cladding temperature limit of 2200°F for design basis accidents.[39] Therefore, when *measured* CETs were several hundred degrees Fahrenheit lower—648°F in one case—than the *actual* maximum fuel cladding temperatures in the LOFT core, maximum fuel cladding temperatures were far below those of a severe accident.

In the severe accident temperature range—when maximum fuel cladding temperatures exceed 2200°F—it is probable that there would be far greater temperature differences between the measured CETs and maximum fuel cladding temperatures than were observed in the four LOFT facility tests discussed above, which simulated design basis accidents. In fact, significant temperature differences—greater than 2000°F—were observed in the final experiment conducted at the LOFT facility, LOFT LP-FP-2, a

---

[37] *Id*.
[38] *Id*., p. 5.
[39] 10 C.F.R. § 50.46(b)(1)

severe accident experiment, in which maximum fuel cladding temperatures exceeded 3308°F, the melting point of Zircaloy.[40]

(LOFT LP-FP-2 is the only severe accident experiment that was an actual reactor core meltdown; it combined decay heating, severe fuel damage, and the quenching of Zircaloy cladding with water.[41] LOFT LP-FP-2 is considered "particularly important in that it was a large-scale integral experiment that provides a valuable link between the smaller-scale severe [accident] experiments and the TMI-2 accident."[42])

Regarding the significant temperature differences between measured CETs and maximum fuel cladding temperatures that were observed in LOFT LP-FP-2, "Core Exit Temperature (CET) Effectiveness in Accident Management of Nuclear Power Reactor" states:

> When the core temperatures started [thermal] runaway[43] at about 1500 [seconds after the experiment commenced] and quickly exceeded 2100 K [3321°F] with a fission product release, the fluid temperatures in the upper plenum measured over the center fuel module…actually started to decrease. The temperature was typically 700 K [801°F] when quenching of the core occurred. For the peripheral bundles the temperatures were typically around 600 K [621°F] when core quench began.[44] … The core

---

[40] NRC, "Feasibility Study of a Risk-Informed Alternative to 10 CFR 50.46, Appendix K, and GDC 35," p. 3-1.

[41] T. J. Haste *et al.*, "Degraded Core Quench: A Status Report," p. 13.

[42] S. R. Kinnersly *et al.*, "In-Vessel Core Degradation in LWR Severe Accidents: A State of the Art Report to CSNI," January 1991, p. 3.23.

[43] The initial heat up rate of the fuel cladding in LOFT LP-FP-2 was approximately 1.8°F per second. See T. J. Haste *et al.*, "Degraded Core Quench: A Status Report," p. 13.

In LOFT LP-FP-2, at fuel cladding temperatures at which the zirconium-steam reaction became rapid, the local heat up rate of the fuel cladding began increasing. For example, at one location on the central fuel bundle (at the 42-inch elevation) when cladding temperatures had reached just below 2200°F, the fuel cladding heat up rate had increased to approximately 21.4°F per second; at the same location, between cladding temperatures of approximately 2200°F and 2780°F, the *average* heat up rate was approximately 36.3°F per second. See NRC, "Draft Interim Review of PRM-50-93/95 Issues Related to the LOFT LP-FP-2 Test," 2011, located at: www.nrc.gov, Electronic Reading Room, ADAMS Documents, Accession Number: ML112650009, pp. 4, 5.

The phenomenon of rapid oxidation causing rapid fuel cladding temperature increases is sometimes termed "runway oxidation," "thermal runway," or "runway conditions." See Robert Prior *et al.*, "Core Exit Temperature (CET) Effectiveness in Accident Management of Nuclear Power Reactor," p. 130.

[44] The conductors of LOFT LP-FP-2 commenced reflooding the reactor core 1782.6 seconds after the experiment started. See J. P. Adams *et al.*, "Quick Look Report on OECD LOFT Experiment

> quench caused a large excursion in the fluid temperature measurements. For a few seconds temperatures near 2000 K [3141°F] were observed followed by indication of saturation temperature.
>
> There was no evidence in the test that the CET indication was very much delayed. It can be concluded though that the core exit temperatures were much lower than typical core temperatures. During the rapid oxidation phase the CET appeared essentially to be disconnected from core temperatures. … The temperature excursion at core quench is probably explained by a violent flow up through the bundle that heated up the thermocouples.[45]

In LOFT LP-FP-2, in a time period when maximum core temperatures were measured to exceed 3300°F, CETs were typically measured at 800°F—more than 2500°F lower than maximum core temperatures. And in LOFT LP-FP-2, "during the rapid oxidation phase the CET appeared essentially to be disconnected from core temperatures."[46]

The results of LOFT LP-FP-2 and other PWR experiments demonstrate the need for PWRs to operate with in-core temperature-monitoring devices (for example, thermoacoustic sensors or thermocouples) located at different elevations and radial positions throughout the reactor core in order to enable PWR operators to accurately measure a large range of in-core temperatures in PWR steady-state and transient conditions.

III.C. In-Core Thermoacoustic Sensors

According to a 2013 INL report, in the Fukushima Daiichi accident, "[t]here was a loss of the sensors and instrumentation within the reactor [cores] that could have provided valuable information to guide the operators to make informed decisions and avoid the unfortunate events that followed."[47] And according to a 2014 collaborative paper between Pennsylvania State University ("Penn State"), INL, and Westinghouse, the

---

LP-FP-2," OECD LOFT-T-3804, September 1985, located at: www.nrc.gov, Electronic Reading Room, ADAMS Documents, Accession Number: ML071940358, Appendix E, p. E-17.

[45] Robert Prior *et al*., "Core Exit Temperature (CET) Effectiveness in Accident Management of Nuclear Power Reactor," pp. 49-50.

[46] *Id*., p. 50.

[47] James A. Smith, Dale K. Kotter, Idaho National Laboratory, "Synergistic Smart Fuel for In-Pile Nuclear Reactor Measurements," INL/CON-13-28098, October 2013.

inability to "monitor the condition (*e.g.*, temperature) of the fuel rods in the reactor" cores during the Fukushima Daiichi accident, "*highlighted the need for self-powered sensors that could transmit data independently of electronic networks*"[48] [emphasis added].

The 2013 INL report states that in response to the "loss of the sensors and instrumentation within the reactor" cores that occurred in the Fukushima Daiichi accident, INL and Penn State "have developed and tested a potential self-powered thermoacoustic system, which will have the ability to serve as a temperature sensor and can transmit data independently of electronic networks. Such a device is synergistic with the harsh environment of the nuclear reactor as it utilizes the heat from the nuclear fuel to provide the input power."[49]

Thermoacoustic sensors are passive devices that have no moving parts and do not require wiring or vessel penetrations in the reactor core. The 2013 INL report states that "a thermoacoustic engine produces a sound wave from heat flowing from a high temperature thermal reservoir to a colder one" and that "[s]uch a device can utilize the high heat energy from a nuclear reactor and convert this into an acoustic oscillation, whose frequency can be *correlated to the temperature within the reactor*"[50] [emphasis added]. And the 2014 collaborative paper between Penn State, INL, and Westinghouse, states that "a thermoacoustic engine can be as simple as a closed cylindrical tube (*e.g.*, the fuel-rod itself) and an entirely passive structure known as a "stack,"[51] as depicted in Figure 1 below.

---

[48] Steven L. Garrett *et al*., "Thermoacoustic Engines as Self-Powered Sensors within a Nuclear Reactor," 167th Acoustical Society of America Meeting, May 7, 2014.
[49] James A. Smith, Dale K. Kotter, Idaho National Laboratory, "Synergistic Smart Fuel for In-Pile Nuclear Reactor Measurements," INL/CON-13-28098, October 2013.
[50] James A. Smith, Dale K. Kotter, "Synergistic Smart Fuel for In-Pile Nuclear Reactor Measurements."
[51] Steven L. Garrett *et al*., "Thermoacoustic Engines as Self-Powered Sensors within a Nuclear Reactor."

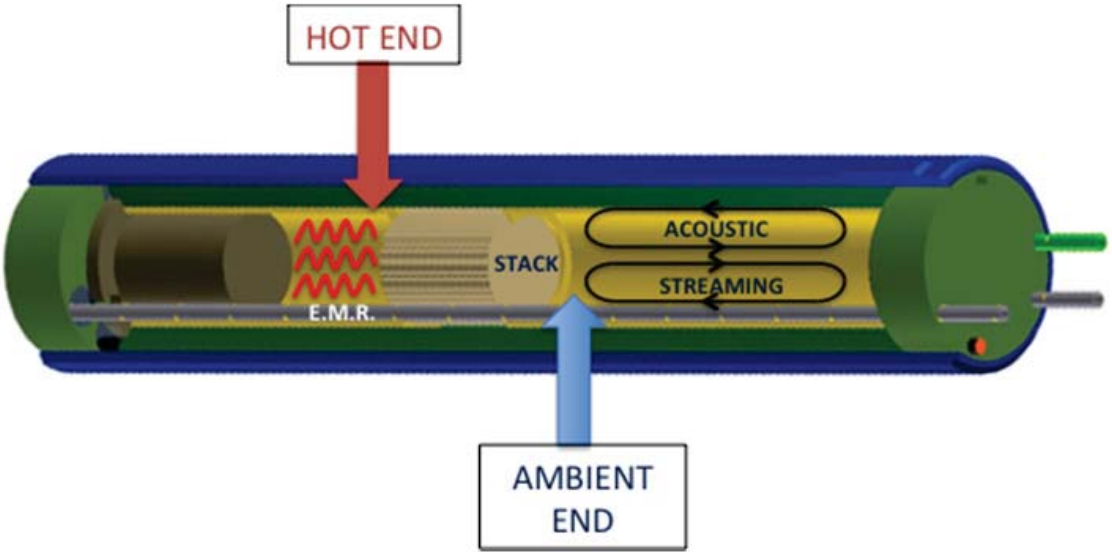

Figure 1. Describing Figure 1**,** the 2013 INL report states: "Nuclear fuel-rod adapted to a thermoacoustic sensor. The fuel (left) heats the hot end of the "stack" by electromagnetic radiation [EMR]. The heat transfer from the ambient-temperature end of the stack is enhanced by the acoustically-driven streaming gas flow indicated by the oblong arrows. That streaming also increases the heat transfer from the gas to the surrounding coolant."[52]

Discussing in greater detail how thermoacoustic sensors would operate in reactor cores, the 2014 collaborative paper between Penn State, INL, and Westinghouse, states:

> The high temperatures produced by the nuclear fuel rods…will create a sufficient temperature gradient across the stack to create an oscillating pressure wave within the engine. The frequency of the sound will be dependent upon the temperature within the resonator (*i.e.*, fuel rod). This frequency can be propagated via sound radiation through the cooling fluid in the reactor and monitored at some distance away. This novel technique eliminates the dependence on electrical power for signal monitoring, while actually taking advantage of the extreme operating conditions within the nuclear reactor.[53]

(It is noteworthy that the authors of the 2013 INL report state that they "believe that [the] thermoacoustic strategy can be extended to self-powered remote sensing of

[52] James A. Smith, Dale K. Kotter, "Synergistic Smart Fuel for In-Pile Nuclear Reactor Measurements."
[53] Steven L. Garrett *et al*., "Thermoacoustic Engines as Self-Powered Sensors within a Nuclear Reactor."

changes in fuel porosity and to tracking of fission gas (particularly krypton and xenon) evolution as part of the radioactive decay of the fuel."[54])

According to Michael Heibel, a technical program manager at Westinghouse, in steady-state conditions, thermoacoustic sensors would enable NPP operators "to monitor the core much more accurately, allowing them to produce more electricity from the same amount of uranium."[55] And according to the 2013 INL report, "[i]ntegrating [thermoacoustic] sensor systems along with the existing nuclear reactor instrumentation can prove to be a significant benefit for the nuclear industry."[56]

It is apparent that thermoacoustic sensors would be superior to thermocouples for accurately measuring a large range of in-core temperatures in steady-state and transient conditions, because they are passive devices that have no moving parts and do not require wiring or vessel penetrations in the reactor core.

III.D. In-Core Thermocouples

III.D.1. In-Core Thermocouples have Been Tested and Used in Nuclear Reactors for Decades

In-core thermocouples have been tested and used in nuclear reactors for decades, as the primary component of in-core gamma thermometers, which are "device[s] used for measuring the gamma flux in a nuclear reactor."[57] (See Appendix A for a depiction of a cross section of a gamma thermometer.)

"Instrumentation and Control Systems," Chapter 7 of "ESBWR Design Control Document," states that gamma thermometers—the present Radcal design[58]—have been

---

[54] James A. Smith, Dale K. Kotter, "Synergistic Smart Fuel for In-Pile Nuclear Reactor Measurements."

[55] World Nuclear News, "Westinghouse to market fuel rod sensors by 2019," June 20, 2014. The quote from the article is attributed to statements of Michael Heibel, a technical program manager at Westinghouse.

[56] James A. Smith, Dale K. Kotter, "Synergistic Smart Fuel for In-Pile Nuclear Reactor Measurements."

[57] GE Hitachi Nuclear Energy, "Licensing Topical Report: Gamma Thermometer System for LPRM Calibration and Power Shape Monitoring," NEDO-33197-A, Revision 3, Class I, October 2010, (ADAMS Accession No. ML102810320), p. 1.

[58] R. H. Leyse, R. D. Smith: "Gamma Thermometer Developments for Light Water Reactors," IEEE Transactions on Nuclear Science, Vol.N5.26, No. 1, February 1979, pp. 934–943.

installed in various nuclear reactors since 1979.[59] For example, Radcal gamma thermometers were installed in the reactor cores of Palisades Nuclear Plant and Arkansas Nuclear One Units 1 and 2—PWRs—in the 1980s. (See Appendix B for a table listing a number of the facilities that have installed in-core Radcal gamma thermometers.)

Radcal gamma thermometers have also been installed in BWR cores. GE Hitachi Nuclear Energy, "Licensing Topical Report: Gamma Thermometer System for LPRM Calibration and Power Shape Monitoring," states that "[t]here have been three in-plant tests of [gamma thermometer] sensors in BWRs thus far. The first test was at Limerick [Unit] 2 and lasted for two cycles, a total of four years. The second test, which was at Tokai [Unit] 2, lasted for a single cycle of one year duration."[60] The third test was conducted at Kashiwazaki-Kariwa Unit 5.[61]

III.D.2. GE Hitachi Nuclear Energy has Plans to Install In-Core Thermocouples in the ESBWR

GE Hitachi Nuclear Energy certainly seems to be satisfied with the in-core performance of Radcal gamma thermometers—which *each have two thermocouples*—because GE Hitachi Nuclear Energy has plans to install Radcal gamma thermometers in the Economic Simplified Boiling Water Reactor ("ESBWR").

GE Hitachi Nuclear Energy's licensing topical report, "Gamma Thermometer System for LPRM Calibration and Power Shape Monitoring," states that there are plans to install seven gamma thermometers at different elevations at 64 radial positions throughout the reactor core of the ESBWR.[62] Thermocouples would be the primary component of the gamma thermometers installed in the reactor core of the ESBWR.

Each gamma thermometer has two thermocouples; therefore, GE Hitachi Nuclear Energy has plans to install 896 in-core thermocouples in each ESBWR reactor.

---

[59] GE Nuclear Energy, "ESBWR Design Control Document," Tier 2, Chapter 7, "Instrumentation and Control Systems," 26A6642AW, Revision 1, January 2006, (ADAMS Accession No. ML060520260), pp. 7A-6, 7A-7.
[60] GE Hitachi Nuclear Energy, "Licensing Topical Report: Gamma Thermometer System for LPRM Calibration and Power Shape Monitoring," NEDO-33197-A, p. 25.
[61] *Id*.
[62] *Id*., p. 8.

(See Appendix C for a depiction of four gamma thermometers at different elevations in an instrument tube; and see Appendix D for a depiction of where instrument tubes, in which gamma thermometers would be placed, would be positioned throughout the ESBWR reactor core.)

III.D.3. According to GE Hitachi Nuclear Energy Maintaining In-Core Thermocouples Would Cause Virtually No Radiation Dose to Workers

GE Hitachi Nuclear Energy maintains that the use of in-core gamma thermometers would not result in a higher radiation dose to plant workers. According to GE Hitachi Nuclear Energy, "A [gamma thermometer] system…has no moving parts, no under vessel tubing, *virtually no radiation dose* to maintenance since it is a fixed in-core probe, and is expected to be very reliable"[63] [emphasis added].

As stated above, thermocouples are the primary component of gamma thermometers; and like gamma thermometers, in-core thermocouples could certainly be placed inside of instrument tubes, distributed throughout the reactor core. Hence, it can be extrapolated from GE Hitachi Nuclear Energy's claim that in-core thermocouples would cause virtually no radiation dose to workers during maintenance.

(It also follows that GE Hitachi Nuclear Energy claims that in-core thermocouples would be very reliable, because thermocouples are the primary component of gamma thermometers.)

III.D.4. Idaho National Laboratory Has Developed High-Temperature Irradiation-Resistant Thermocouples

A 2009 INL report, "High Temperature Irradiation-Resistant Thermocouple Performance Improvements," states that INL has "developed and evaluated the performance of a high temperature irradiation-resistant thermocouple…that contains doped molybdenum and a niobium alloy. Data from high temperature (up to 1500ºC), long duration (up to 4000 hours) tests and on-going irradiations at INL's Advanced Test Reactor demonstrate the superiority of these sensors to commercially-available thermocouples. However, several options have been identified that could further enhance their reliability, *reduce their*

[63] *Id*., p. 1.

production costs, and allow their use in a wider range of operating conditions" [emphasis added].[64]

The 2009 INL report also states that high temperature irradiation-resistant thermocouples can be developed for specific customer needs and varied conditions.[65]

IV. THE RATIONAL FOR THE PROPOSED REGULATION

Petitioner is submitting this 10 C.F.R. § 2.802 petition for rulemaking to NRC because it would help improve public and plant-worker safety if NPPs were required to operate with in-core temperature-monitoring devices (for example, thermoacoustic sensors or thermocouples) located at different elevations and radial positions throughout the reactor core in order to enable NPP operators to accurately measure a large range of in-core temperatures in steady-state and transient conditions. In the event of a severe accident, in-core temperature-monitoring devices would enable NPP operators to accurately measure in-core temperatures, providing crucial information to help them track the progression of core damage and manage the accident; for example, indicating the correct time to transition from EOPs to implementing SAMGs.

It is noteworthy that imposing a regulation that required improvements in monitoring in-core temperatures could actually increase the electrical production of NPPs. According to Michael Heibel, a technical program manager at Westinghouse, in steady-state conditions, thermoacoustic sensors—in-core temperature-monitoring devices—would enable NPP operators "to monitor the core much more accurately, allowing them to produce more electricity from the same amount of uranium."[66] And according to a 2013 INL report, "[i]ntegrating [thermoacoustic] sensor systems along

---

[64] Joshua Daw *et al*., Idaho National Laboratory, "High Temperature Irradiation-Resistant Thermocouple Performance Improvements," INL/CON-09-15267, Sixth American Nuclear Society International Topical Meeting on Nuclear Plant Instrumentation, Control, and Human-Machine Interface Technologies, April 2009, p 1.

[65] *Id*.

[66] World Nuclear News, "Westinghouse to market fuel rod sensors by 2019," June 20, 2014. The quote from the article is attributed to statements of Michael Heibel, a technical program manager at Westinghouse.

with the existing nuclear reactor instrumentation can prove to be a significant benefit for the nuclear industry."[67]

It is apparent that thermoacoustic sensors would be superior to thermocouples for accurately measuring a large range of in-core temperatures in steady-state and transient conditions, because they are passive devices that have no moving parts and do not require wiring or vessel penetrations in the reactor core.

V. CONCLUSION

If implemented, the regulation proposed in this petition for rulemaking would help improve public and plant-worker safety.

Respectfully submitted,

/s/

Mark Edward Leyse
P.O. Box 1314
New York, NY 10025
markleyse@gmail.com

Dated: March 13, 2015

[67] James A. Smith, Dale K. Kotter, Idaho National Laboratory, "Synergistic Smart Fuel for In-Pile Nuclear Reactor Measurements," INL/CON-13-28098, October 2013.

Appendix A Figure 1-1, Cross Section of a Gamma Thermometer[1]

[1] GE Nuclear Energy, "Licensing Topical Report: Gamma Thermometer System for LPRM Calibration and Power Shape Monitoring," NEDO-33 197, Revision 0, eDRF 0000-0041-9907, Class I, September 2005, available at: www.nrc.gov, NRC Library, ADAMS Documents, Accession Number: ML052700450, p 3.

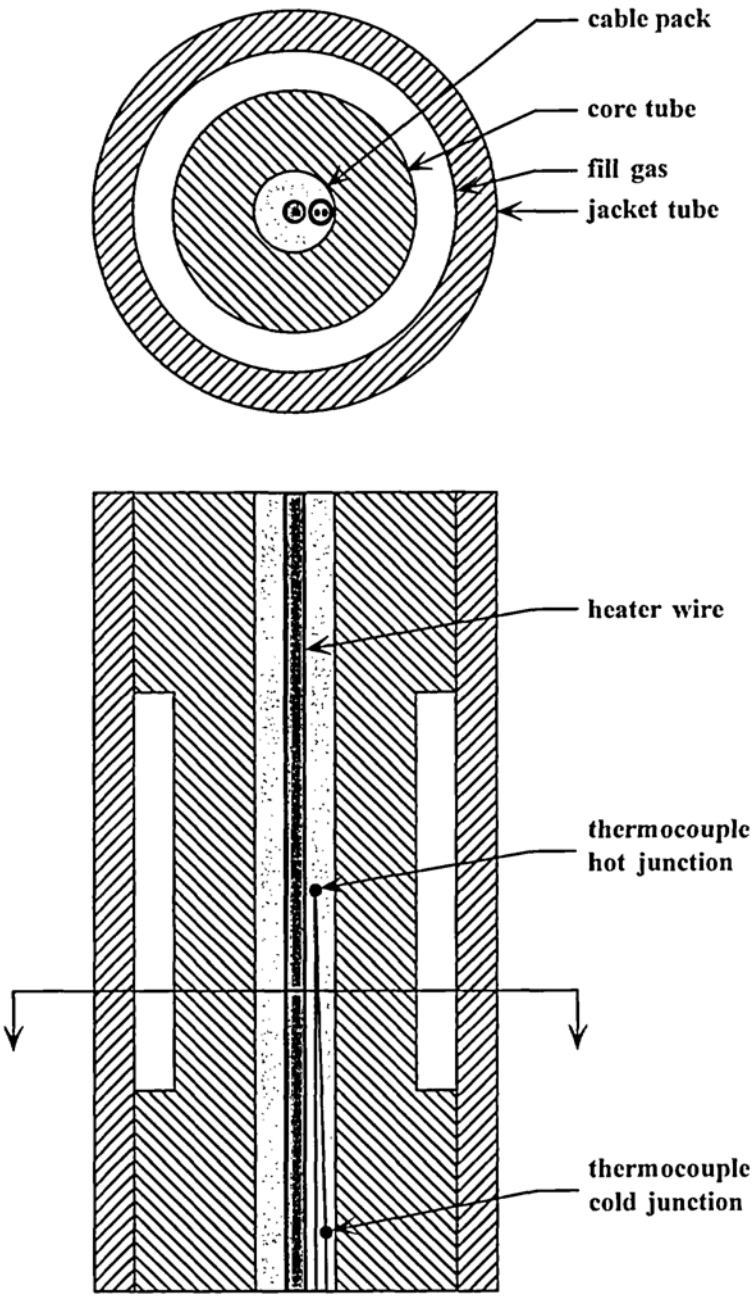

Figure 1-1, Cross Section of a Gamma Thermometer

Appendix B Table 7A-2, Worldwide Experience with Gamma Thermometers[2]

[2] GE Nuclear Energy, "ESBWR Design Control Document," Tier 2, Chapter 7, "Instrumentation and Control Systems," 26A6642AW, Revision 1, January 2006, available at: www.nrc.gov, NRC Library, ADAMS Documents, Accession Number: ML060520260, pp. 7A-18, 7A-19.

Table 7A-2

Worldwide Experience with Gamma Thermometers

Utility or Company	Unit or Plant	Type GT System	No. Sensors per rod	No. of rods	Year	Comments/Status
DuPont	Savannah River	RPM	N/A	N/A	1950-80	Tritium reactor; GT used for heat flux monitoring. Single point thermocouples used.
OECD Norway	Dodewaard	RPM	1	4	1980	BWR; 10% drift in first two cycles. 1 unit had bad connector failed. Response not stable.
EdF	Bugey-5	RPM	9	2	1979	PWR; no heater this design, 7 of 18 sensors failed. Response not stable.
EdF	Tricastin-3	RPM	9	4	1980	PWR; all sensors working after 4 cycles. Some drift and parasitic noise.
EdF	Tricastin-2	RPM	9	4	1980	PWR; 1 heater failure, heaters not hot enough, 3 sensors failed.
Duke Power Co.	Experimental Unit	N/A	7	1	1982	Irradiated sample tests performed by TEC/ORNL.
EdF	Cruas-2	RPM	9	8	1983	PWR; 18 m long, replaced TIP, after two cycles: within 6% of TIP data, and all sensors working.
SSPB	Forsmark-1	RPM	6	2	1983	BWR; 15 m long, 3 sensor failures during installation only. Operational since 1983.
AP&L	Experimental Unit	RVLMS	9, 14	2	1984	Tested in ORNL loop. 2 GT rods for qualification as RVLMS system.

Table 7A-2

Worldwide Experience with Gamma Thermometers

Utility or Company	Unit or Plant	Type GT System	No. Sensors per rod	No. of rods	Year	Comments/Status
SSPB	Ringhals-2	RPM	9	4	1984	PWR; 35 m long with 9 sensors and 1 heater each. 1 heater failure after 2 cycles.
AP&L	ANO-2	RVLMS	14	2	1985	PWR; operational since 1985; 2 sensors failed.
DuPont	Savannah River	RPM	7	2	1985	Tritium reactor; evaluation units successfully tested.
AP&L	ANO-1	RVLMS	9	2	1986	PWR; in operation since 1986.
General Atomic	Fort St. Vrain	RPM	7	1	1986	GCR; status not known.
SSPB	Ringhals-2	RPM	9	4	1987	PWR; 35 m long with 9 sensors and 1 heater each. No failures in operation.
Consumers Power Co.	Palisades	RVLMS	8	4	1988	PWR; 2 in reactor, 2 spares. 1 sensor failure in 1, 1 sensor & heater in 2nd. Replaced 2nd in 1990. All OK.
Westing-house	Savannah River 1-3	RPM	7	36	1988-89	Tritium reactor; 9 GTs operating OK, 18 more installed & checked out OK, 9 spares.
AP&L	ANO-1	RVLMS	9	4	1990	PWR; 4 spares rods delivered 1990
AP&L	ANO-2	RVLMS	14	4	1990	PWR; 4 spares rods delivered 1991
			———	——		
		Total:	723 sensors	90 rods		

Appendix C Figure 7.2-8, Axial Distribution of LPRM Detectors[3]

[3] GE Nuclear Energy, "ESBWR Design Control Document," Tier 2, Chapter 7, "Instrumentation and Control Systems," 26A6642AW, p. 7.2-60.

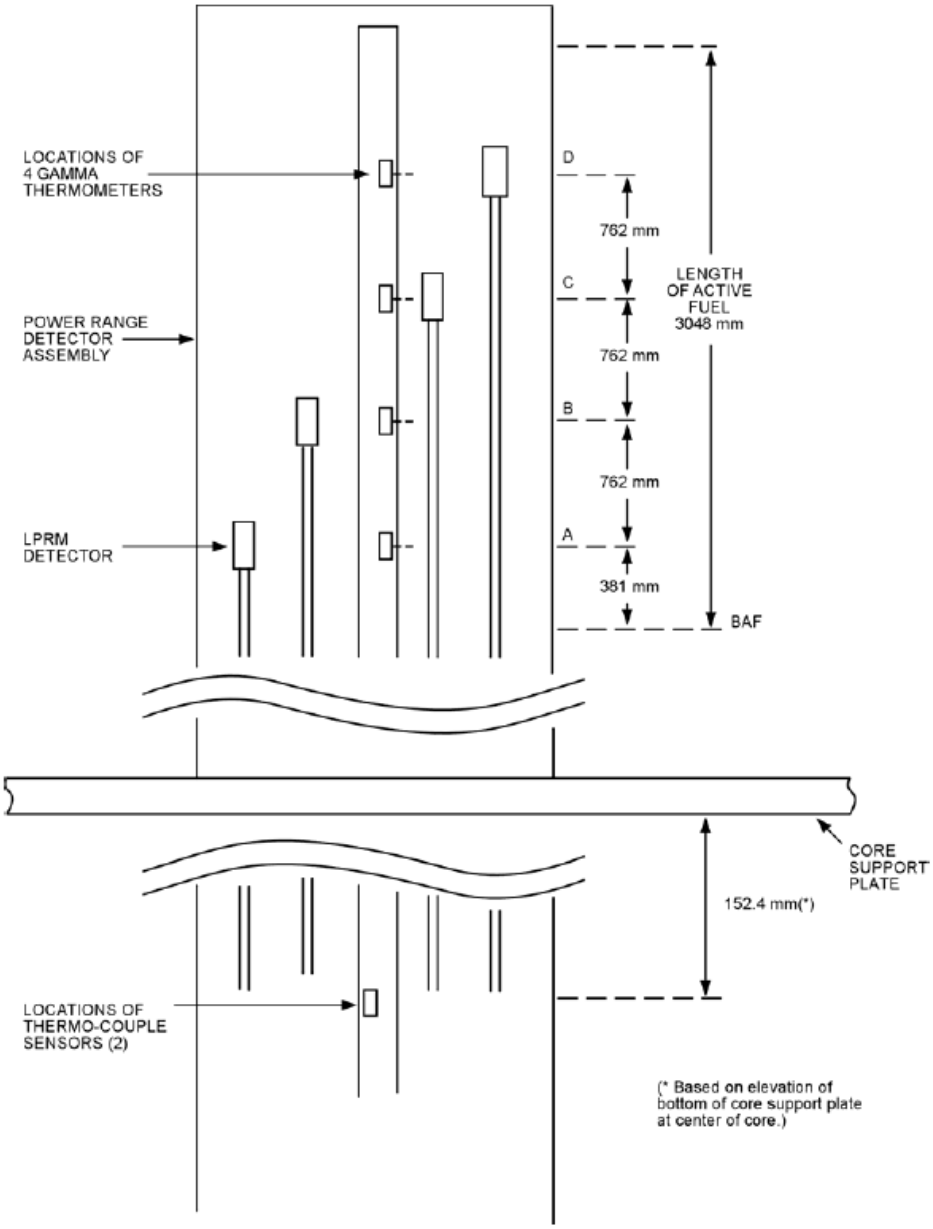

Figure 7.2-8. Axial Distribution of LPRM Detectors

Appendix D Figure 7.2-7, LPRM Locations in the Core[4]

[4] GE Nuclear Energy, "ESBWR Design Control Document," Tier 2, Chapter 7, "Instrumentation and Control Systems," 26A6642AW, p. 7.2-59.

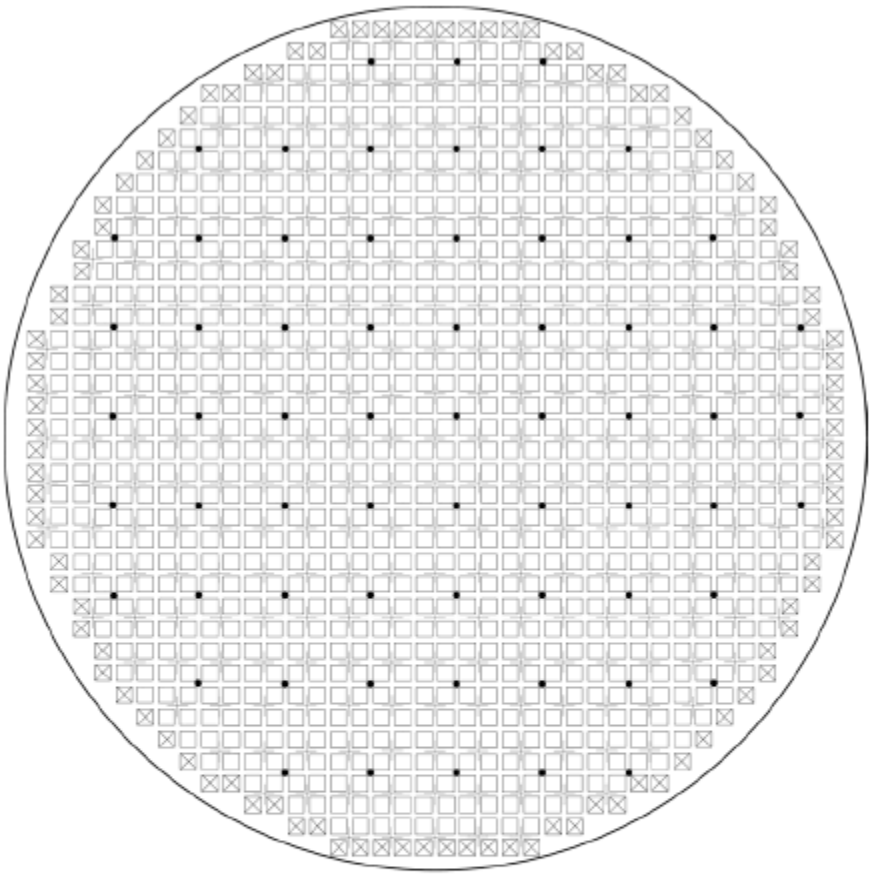

Central Region Bundle	1028	Control Rod	269
Peripheral Region Bundle	104	LPRM	64
Total	1132		

ESBWR Core Map

Figure 7.2-7. LPRM Locations in the Core