B. H. Whitley
Director
Regulatory Affairs

Southern Nuclear
Operating Company, Inc.
42 Inverness Center Parkway
Birmingham, AL 35242

Tel 205.992.7079
Fax 205.992.5296

APR 09 2015

SOUTHERN COMPANY

Docket Nos.: 52-025
52-026

ND-15-0637
10 CFR 50.90
10 CFR 52.63

U.S. Nuclear Regulatory Commission
Document Control Desk
Washington, DC 20555-0001

Southern Nuclear Operating Company
Vogtle Electric Generating Plant Units 3 and 4
Request for License Amendment and Exemption:
Consolidation of Uninterruptible Power Supply System
Spare Battery Termination Boxes (LAR-15-004)

Ladies and Gentlemen:

Pursuant to 10 CFR 52.98(c) and in accordance with 10 CFR 50.90, Southern Nuclear Operating Company (SNC), the licensee for Vogtle Electric Generating Plant (VEGP) Units 3 and 4, requests an amendment to Combined License (COL) Numbers NPF-91 and NPF-92, for VEGP Units 3 and 4, respectively. The requested amendment requires changes to the Updated Final Safety Analysis Report (UFSAR) in the form of departures from the incorporated plant-specific Design Control Document (PS-DCD) Tier 2 information, and involves changes to related Tier 1 information, with corresponding changes to the associated COL Appendix C information. Pursuant to the provisions of 10 CFR 52.63(b)(1), an exemption from elements of the design as certified in the 10 CFR Part 52, Appendix D, design certification rule is also requested for the plant-specific DCD Tier 1 material departures.

The requested amendment proposes changes to the Class 1E dc and Uninterruptible Power Supply System (IDS), replacing four Spare Termination Boxes with a single Spare Battery Termination Box. Enclosure 1 provides the description, technical evaluation, regulatory evaluation (including the Significant Hazards Consideration determination), and environmental considerations for the proposed changes in the License Amendment Request (LAR). Enclosure 2 provides the background and supporting basis for the requested exemption. Enclosure 3 identifies the requested changes and provides markups depicting the requested changes to the plant-specific Tier 1 and PS-DCD Tier 2 text and tables.

The changes proposed in this License Amendment Request are consistent in technical content with LAR 13-29, submitted by South Carolina Electric & Gas Company (SCE&G) on December 19, 2014 (ADAMS Accession No. ML14353A126) and supplemented February 25, 2015 (ADAMS Accession No. ML15056A429). The NRC accepted the SCE&G LAR 13-29 for review on March 16, 2015 (ADAMS Accession No. ML15071A373).

This letter contains no regulatory commitments.

SNC requests staff approval of this license amendment and exemption by February 19, 2016, to support installation of the IDS Spare Battery Termination Box. Delayed approval of this licensing request could result in delay of the associated construction activity and subsequent dependent construction activities. SNC expects to implement the proposed amendment (through incorporation into the licensing basis documents; e.g., the UFSAR) within 30 days of the approval of the requested changes.

In accordance with 10 CFR 50.91, SNC is notifying the State of Georgia of this LAR by transmitting a copy of this letter and enclosures to the designated State Official.

Should you have any questions, please contact Mr. Jason Redd at (205) 992-6435.

Mr. Brian H. Whitley states that: he is the Regulatory Affairs Director of Southern Nuclear Operating Company; he is authorized to execute this oath on behalf of Southern Nuclear Operating Company; and to the best of his knowledge and belief, the facts set forth in this letter are true.

Respectfully submitted,

SOUTHERN NUCLEAR OPERATING COMPANY

Brian H. Whitley

BHW/WES/ljs

Sworn to and subscribed before me this 9th *day of* April, *2015*

Notary Public: Kristin Marie Seibert

My commission expires: August 16, 2016

KRISTIN MARIE SEIBERT NOTARY PUBLIC ALABAMA STATE AT LARGE

Enclosures: 1) License Amendment Request, Consolidation of IDS Spare Termination Boxes (LAR-15-004)
2) Exemption Request for Consolidation of IDS Spare Termination Boxes (LAR-15-004)
3) Proposed Changes to Licensing Basis Documents (LAR-15-004)

cc:

Southern Nuclear Operating Company / Georgia Power Company
Mr. S. E. Kuczynski (w/o enclosures)
Mr. J. A. Miller
Mr. D. G. Bost (w/o enclosures)
Mr. M. D. Meier
Mr. M. D. Rauckhorst (w/o enclosures)
Mr. J. T. Gasser (w/o enclosures)
Mr. D. H. Jones (w/o enclosures)
Ms. K. D. Fili (w/o enclosures)
Mr. D. R. Madison
Mr. T. W. Yelverton
Mr. B. H. Whitley
Mr. C. R. Pierce
Mr. D. L. Fulton
Mr. M. J. Yox
Mr. J. C. Harrelson
Mr. W. A. Sparkman
Mr. J. P. Redd
Document Services RTYPE: VND.LI.L00
File AR.01.02.06

Nuclear Regulatory Commission
Mr. V. M. McCree (w/o enclosures)
Mr. M. Delligatti (w/o enclosures)
Mr. L. Burkhart (w/o enclosures)
Mr. C. Patel
Ms. D. L. McGovern
Mr. B. M. Bavol
Ms. R. Reyes
Ms. M. A. Sutton
Mr. M. E. Ernstes
Mr. G. Khouri
Mr. L. M. Cain
Mr. J. D. Fuller
Mr. C. B. Abbott
Mr. C. Huffman
Ms. S. Temple

State of Georgia
Mr. J. H. Turner

Oglethorpe Power Corporation
Mr. M. W. Price
Ms. K. T. Haynes
Ms. A. Whaley

Municipal Electric Authority of Georgia
Mr. J. E. Fuller
Mr. S. M. Jackson

Dalton Utilities
Mr. D. Cope

CB&I
Mr. J. Simmons (w/o enclosures)
Ms. K. Stoner (w/o enclosures)
Mr. C. A. Castell

Westinghouse Electric Company, LLC
Mr. R. Easterling (w/o enclosures)
Mr. S. W. Gray (w/o enclosures)
Mr. L. Woodcock
Mr. P. A. Russ
Mr. G. F. Couture
Mr. M. Y. Shaqqo

Other
Mr. R. W. Prunty, Bechtel Power Corporation
Ms. K. K. Patterson, Tetra Tech NUS, Inc.
Dr. W. R. Jacobs, Jr., Ph.D., GDS Associates, Inc.
Mr. S. Roetger, Georgia Public Service Commission
Ms. S. W. Kernizan, Georgia Public Service Commission
Mr. K. C. Greene, Troutman Sanders
Mr. S. Blanton, Balch Bingham
Mr. R. Grumbir, APOG
Mr. J. R. Bouknight, South Carolina Electric & Gas Company
Mr. D. Kersey, South Carolina Electric & Gas Company
Mr. B. Kitchen, Duke Energy
Mr. S. Franzone, Florida Power & Light

Southern Nuclear Operating Company

Vogtle Electric Generating Plant (VEGP) Units 3 and 4

ND-15-0637

Enclosure 1

License Amendment Request

Consolidation of IDS Spare Termination Boxes

(LAR-15-004)

(This Enclosure contains 15 pages, including this cover)

Table of Contents

1.0 Summary Description

2.0 Detailed Description

3.0 Technical Evaluation

4.0 Regulatory Evaluation

4.1 Applicable Regulatory Requirements/Criteria

4.2 Precedent

4.3 No Significant Hazards Consideration Determination

4.4 Conclusions

5.0 Environmental Considerations

6.0 References

Pursuant to 10 CFR 52.98(c) and in accordance with 10 CFR 50.90, Southern Nuclear Operating Company (SNC) hereby requests an amendment to Combined License (COL) Nos. NPF-91 and NPF-92 for Vogtle Electric Generating Plant (VEGP) Units 3 and 4, respectively.

1. Summary Description

The proposed changes revise COLs concerning the Class 1E dc and Uninterruptible Power Supply System (IDS). The proposed changes replace four Spare Termination Boxes (IDSS-DF-2, IDSS-DF-3, IDSS-DF-4, and IDSS-DF-5) with a single Spare Battery Termination Box (IDSS-DF-3), and make minor raceway and cable routing changes.

The Spare Termination Boxes are used to manually connect the Spare Battery Bank (IDSS-DB-1A/1B) and Spare Battery Bank Charger (IDSS-DC-1) to supply the loads of one of the four 24 Hour Battery Switchboards (IDSA-DS-1, IDSB-DS-1, IDSC-DS-1, or IDSD-DS-1) or one of the two 72 Hour Battery Switchboards (IDSB-DS-2 or IDSC-DS-2) at a time. The proposed changes maintain the method used to manually connect the Spare Battery Bank and Spare Battery Bank Charger to supply the loads of one of the four 24 Hour Battery Switchboards or one of the two 72 Hour Battery Switchboards at a time while maintaining the independence of the IDS divisions.

The proposed changes require revisions to Updated Final Safety Analysis Report (UFSAR) Tier 2 information, which involves changes to COL Appendix C and departure from plant-specific Tier 1 information. This enclosure requests approval of the license amendment necessary to implement the proposed changes and to obtain NRC approval of the proposed revisions to the COL Appendix C. Enclosure 2 provides the Exemption request which seeks approval for departure from plant-specific Tier 1 material.

2. Detailed Description

The IDS provides dc and uninterruptible ac electrical power for safety-related equipment during normal and off-normal conditions. The IDS is shown in COL Appendix C and plant-specific Tier 1 Figure 2.6.3-1 (Sheets 1-4), and the component locations of the IDS are shown in COL Appendix C and plant-specific Tier 1 Table 2.6.3-4. The IDS configuration consists of multiple Class 1E dc power buses principally comprised of batteries, chargers, inverters, regulating transformers, switchboards, cabinets and cables. The IDS equipment rooms are located in the seismic Category I Auxiliary Building.

The IDS provides reliable power for the safety-related equipment required for the plant instrumentation, control, monitoring, and other vital functions needed for safe shutdown

of the plant. In addition, the IDS provides power to the normal and emergency lighting in the main control room (MCR) and remote shutdown workstation (RSW).

As described in UFSAR Subsection 8.3.2.1, the IDS is capable of providing reliable power for the safe shutdown of the plant without the support of battery chargers during a loss of all ac power sources coincident with a design basis accident (DBA). The IDS is designed so that no single failure results in a condition that prevents the safe shutdown of the plant.

As described in UFSAR Subsection 8.3.2.1, and in both COL Appendix C and plant-specific Tier 1 Section 2.6.3, the following design criteria are required to be met by the IDS:

a) The seismic Category I equipment identified in Tier 1 Table 2.6.3-1 can withstand seismic design basis loads without loss of safety function.
b) Separation is provided between Class 1E divisions, and between Class 1E divisions and non-Class 1E cables.
c) The IDS dc battery fuses and battery charger circuit breakers, and dc distribution panels, MCCs, and their circuit breakers and fuses, are sized to supply their load requirements.
d) Circuit breakers and fuses in IDS battery, battery charger, dc distribution panel, and MCC circuits are rated to interrupt fault currents.
e) The IDS batteries, battery chargers, dc distribution panels, and MCCs are rated to withstand fault currents for the time required to clear the fault from its power source.
f) The IDS electrical distribution system cables are rated to withstand fault currents for the time required to clear the fault from its power source.

As described in COL Appendix C and plant-specific Tier 1 Section 2.6.3, the IDS provides the following safety-related design functions:

a) The IDS provides electrical independence between the Class 1E divisions.
b) The IDS provides electrical isolation between the non-Class 1E ac power system and the non-Class 1E lighting in the MCR.
c) Each IDS 24-hour battery bank supplies a dc switchboard bus load for a period of 24 hours without recharging.
d) Each IDS 72-hour battery bank supplies a dc switchboard bus load for a period of 72 hours without recharging.
e) The IDS spare battery bank supplies a dc load equal to or greater than the most severe switchboard bus load for the required period without recharging.
f) Each IDS 24-hour inverter supplies its ac load.
g) Each IDS 72-hour inverter supplies its ac load.

h) Each IDS 24-hour battery charger provides the Protection and Safety Monitoring System (PMS) with two redundant loss-of-ac input voltage signals.

i) The IDS supplies an operating voltage at the terminals of the Class 1E motor-operated valves identified in Tier 1 Subsections 2.1.2, 2.2.1, 2.2.2, 2.2.3, 2.2.4, 2.3.2, and 2.3.6 that is greater than or equal to the minimum specified voltage.

As described in COL Appendix C and plant-specific Tier 1 Section 2.6.3, the IDS provides the following nonsafety-related design functions:

a) Each IDS 24-hour battery charger supplies a dc switchboard bus load while maintaining the corresponding battery charged.

b) Each IDS 72-hour battery charger supplies a dc switchboard bus load while maintaining the corresponding battery charged.

c) Each IDS regulating transformer supplies an ac load when powered from the 480 V motor control center (MCC).

d) The IDS Divisions B and C regulating transformers supply their post-72 hour ac loads when powered from an ancillary diesel generator.

Because of final design activities including vendor selection and procurement, the four Spare Termination Boxes are replaced with a single Spare Battery Termination Box, and minor raceway and cable routing changes are made. These proposed changes affect COL Appendix C and plant-specific Tier 1 Tables 2.6.3-1 and 2.6.3-4. Specific design changes are made to the IDS to consolidate equipment for minimizing equipment floor space, and to account for vendor specific equipment selected during the procurement process. The raceway and cable routing changes required due to replacing the four Spare Termination Boxes with a single Spare Battery Termination Box continue to fulfill Regulatory Guide 1.75 separation criteria as described in UFSAR Subsection 8.3.2.4.2, and do not impact COL Appendix C, plant-specific Tier 1 or the UFSAR.

Changes to License Basis Documents

UFSAR Table 3.11-1 (Sheet 4), Table 3I.6-2 (Sheet 3), and Figure 8.3.2-1 (Sheet 2), are revised to replace the four Spare Termination Boxes with a single Spare Battery Termination Box.

COL Appendix C Tables 2.6.3-1 and 2.6.3-4 are revised to replace the four Spare Termination Boxes with a single Spare Battery Termination Box. The corresponding changes to plant-specific Tier 1 tables are also requested.

3. Technical Evaluation

These proposed changes do not alter the IDS safety-related and non-safety related design requirements and design functions, as described further below.

The IDS design includes a spare battery for use during maintenance activities or failure of any one of the other six IDS batteries. The Spare Battery Bank and Spare Battery Bank Charger are manually connected to supply loads of one of the four 24 Hour Battery Switchboards or one of the two 72 Hour Battery Switchboards at a time. The design of the Spare Battery Termination Box, with a single breaker supplied in the proposed design such that only one compartment contains a breaker at a time, ensures that the Spare Battery Bank and Spare Battery Bank Charger can only be connected to a single 24 Hour or 72 Hour Battery Switchboard at a time.

The existing design for the IDS routes the dc output from the Spare Battery Bank and Spare Battery Bank Charger through four Spare Termination Boxes for distribution of backup dc power through one of the Fused Transfer Switch Boxes (IDSA-DF-1, IDSD-DF-1, IDSB-DF-1, IDSB-DF-2, IDSC-DF-1, and IDSC-DF-2) of each of the four 24 Hour Battery Switchboards and two 72 Hour Battery Switchboards. These Spare Termination Boxes use plug-in locking type disconnects along with kirk-key interlock switches to permit connection of the Spare Battery Bank and Spare Battery Bank Charger to one of the 24 Hour Battery Switchboards or one of the two 72 Hour Switchboards at a time so that the independence of each IDS division is maintained. The proposed changes replace the four Spare Termination Boxes with a single Spare Battery Termination Box, and make minor raceway and cable routing changes.

The proposed changes do not alter the capability to manually connect the Spare Battery Bank and Spare Battery Bank Charger to one of the four 24 Hour Battery Switchboards or one of the two 72 Hour Battery Switchboards at a time. The design criteria for the IDS as described in UFSAR Subsection 8.3.2.1 and COL Appendix C and plant-specific Tier 1 Section 2.6.3 are not changed. The safety-related design functions as described in COL Appendix C and plant-specific Tier 1 Section 2.6.3 are not adversely affected, including electrical independence, electrical isolation, and capability of the Spare Battery Bank to supply a dc load equal to or greater than the most severe switchboard bus load for the required period without recharging. In addition, the nonsafety-related design functions as described in COL Appendix C and plant-specific Tier 1 Section 2.6.3 are not affected.

Because of replacing the four Spare Termination Boxes with a single Spare Battery Termination Box, raceway and cable routing changes are required. There are no additions or deletions of cabling required. The original four Spare Termination Boxes were located in close proximity to each other in the same location as the new Spare Battery Termination Box, so the routing changes are minimal. The routing of the spare division cabling from between the Spare Fused Transfer Switch Box (IDSS-DF-1) to the original four Spare Termination Boxes is revised to terminate at the new Spare Battery Termination Box instead. In addition, the routing of the multiple divisional cabling from the original four Spare Termination Boxes to the four 24 Hour Battery Fused Transfer Switch Boxes and two 72 Hour Battery Fused Transfer Switch Boxes is revised to originate from the new Spare Battery Termination Box instead. The different divisions of this cabling from the new Spare Battery Termination Box to the four 24 Hour Battery

Fused Transfer Switch Boxes and two 72 Hour Battery Fused Transfer Switch Boxes are routed to remain in compliance with Regulatory Guide 1.75 separation criteria as described in UFSAR Subsection 8.3.2.4.2. The raceway and cable routing changes do not impact either COL Appendix C and plant-specific Tier 1 or the UFSAR.

The proposed changes do not require a change to procedures or a method of control that adversely affects the performance of the IDS safety-related and non-safety related design functions as described in the UFSAR. In the proposed change, the power cables from the Spare Battery Bank and the Spare Battery Bank Charger are permanently routed and normally energized through the Spare Fused Transfer Switch Box to the Spare Battery Termination Box. The Spare Battery Termination Box is an indoor-type, floor-mounted, and free-standing, dry-type metal-enclosed low-voltage power circuit breaker switchgear that contains six draw out-type circuit breaker cubicles with power output connected by normally de-energized cabling to each of the six respective Fused Transfer Switch Boxes. A single breaker is supplied in the proposed design such that only one compartment contains a breaker at a time, ensuring that the Spare Battery Bank and Spare Battery Bank Charger can only be connected to a single 24 Hour or 72 Hour Battery Switchboard at a time. To connect power from the Spare Battery Bank and Spare Battery Bank Charger to a single Fused Transfer Switch Box, a circuit breaker is placed in the appropriate Spare Battery Termination Box cubicle. Circuit breakers are horizontal draw out, stored–energy, and air-break type, three-pole, single-throw, mechanically actuated, without trip devices. Only one breaker compartment contains a breaker at a time. The breaker is capable of being removed and placed into any other breaker compartment, allowing the connection of one of the four 24 Hour Battery Switchboards or one of the two 72 Hour Battery Switchboards at a time. The circuit breaker is closed, and a kirk-key interlock switch in the associated Fused Transfer Switch Box is used to provide the backup power to the desired 24 Hour Battery Switchboard or 72 Hour Battery Switchboard. The manual actions to connect backup power to a single 24 Hour Battery Switchboard or 72 Hour Battery Switchboard do not involve any additional steps between current design and the proposed design. Therefore, the manual actions can be completed within the COL Appendix A Technical Specifications Limiting Condition for Operation (LCO) Completion Times for an inoperable Division A, B, C, and D Class 1E DC power subsystem.

The IDS with the proposed changes continues to meet the same regulatory acceptance criteria, electrical codes, and industry standards specified in the UFSAR. The proposed changes comply with the requirements for equipment separation (e.g., Regulatory Guide 1.75), environmental qualification (e.g., IEEE-323), and seismic qualification (e.g., IEEE-344), as stated in the UFSAR. The proposed changes are consistent with the existing inspection and testing requirements (e.g., IEEE-338, Regulatory Guide 1.41, and Regulatory Guide 1.118), and comply with General Design Criterion (GDC) 18, as stated in the UFSAR.

The proposed IDS changes to replace the four Spare Termination Boxes with a single Spare Battery Termination Box result in changes to COL Appendix C and plant-specific

Tier 1 Table 2.6.3-1, which identifies whether the equipment is seismic, Class 1E, environmentally qualified, or has MCR safety related displays; and Table 2.6.3-4, which identifies the location of major equipment. As addressed in the COL Appendix C and plant-specific Tier 1 Design Description for Section 2.6.3, Figure 2.6.3-1 depicts the functional arrangement of the IDS. The purpose of providing the information in these COL Appendix C and plant-specific Tier 1 tables and figure is to identify the information to be confirmed during construction by the COL Appendix C and plant-specific Tier 1 Section 2.6.3 ITAAC in Table 2.6.3-3, that refer to the above tables and figure.

The following ITAAC in Table 2.6.3-3 are related to the proposed IDS changes, and do not require changes to confirm that the Structures, Systems, and Components (SSCs) related to this activity are constructed in accordance with the design certification:

Design Commitment:

1. Confirm that the as-built IDS conforms to the functional arrangement as described in the Design Description of Section 2.6.3.
2. Confirm that the seismic category I equipment identified in Table 2.6.3-1 can withstand seismic design basis loads without loss of safety function.
3. Confirm that separation is provided between Class 1E divisions, and between Class 1E divisions and non-Class 1E cables.

4.a. Confirm that the IDS provides electrical independence between the Class 1E divisions.

4.e. Confirm that the IDS spare battery bank supplies a dc load equal to or greater than the most severe switchboard bus load for the required period without recharging.

The proposed changes to the design information presented in COL Appendix C and plant-specific Tier 1 Tables 2.6.3-1 and 2.6.3-4 are at a level of detail that is consistent with the other information currently presented in these tables. As previously stated, the proposed changes neither adversely affect the ability of the IDS to meet its design functions, or involve a significant decrease in the level of safety provided by the IDS. Therefore, the proposed changes to information provided in the COL Appendix C and plant-specific Tier 1 Section 2.6.3 Design Description tables continue to meet the UFSAR Section 14.3 Certified Design Material (CDM) criteria and provide the detail necessary to implement the corresponding ITAAC that address these tables.

An impact review determined that these proposed changes do not affect or require any change to the AP1000 Probabilistic Risk Assessment (PRA) presented in UFSAR Chapter 19, including the Fire PRA, results and insights (e.g., core damage frequency (CDF) and large release frequency (LRF)). There are no changes to the design functions of the IDS, and no changes to the failure probabilities of the IDS. Therefore, there are no

changes required to initiating event frequencies and system logic models of the PRA. The existing PRA risk significance investment protection determination for IDS is not affected.

The post-accident monitoring (PAM) parameters powered by IDS as shown in UFSAR Table 7.5-1 are not affected by the proposed changes. In addition, there are no fire area or radiation zone changes required due to the proposed changes. The Spare Battery Termination Box is made of non-combustible materials, and is located in a room that contains no radioactive materials.

There is no change to the risk-significant designation of the IDS distribution panels within the Design Reliability Assurance Program (D-RAP) as described in UFSAR Table 17.4-1, as the IDS distribution equipment is already identified as risk-critical. The IDS provides Class 1E power to multiple systems and instrumentation and the Defense-in-Depth (DID) (Investment Protection) function to provide the "capability to recharge the batteries from the onsite or offsite ac electrical sources … so that safety-related functions can be supported for an indefinite time" as described in UFSAR Subsection 14.2.9.1.14, which is not adversely affected by these proposed changes.

The proposed changes do not affect the containment, control, channeling, monitoring, processing or releasing of radioactive and non-radioactive materials. No effluent release path is affected. The types and quantities of expected effluents are not changed. Therefore, radioactive or non-radioactive material effluents are not affected the proposed changes do not affect plant radiation zones, controls under 10 CFR 20, and expected amounts and types of radioactive materials. Therefore, individual and cumulative radiation exposures do not change.

Summary

Although there are COL Appendix C and corresponding plant-specific Tier 1 changes proposed, the resulting reduction in standardization caused by these changes does not cause a decrease in safety.

The proposed changes affect IDS equipment used to manually connect the Spare Battery Bank and Spare Battery Bank Charger to supply loads of one of the four 24 Hour Battery Switchboards or one of the two 72 Hour Battery Switchboards at a time, due to final design activities including vendor selection and procurement. These proposed changes replace the four Spare Termination Boxes with a single Spare Battery Termination Box, and make minor raceway and cable routing changes. The proposed changes maintain the method used to manually connect the Spare Battery Bank and Spare Battery Bank Charger to supply loads of one of the four 24 Hour Battery Switchboards or one of the two 72 Hour Battery Switchboards at a time while maintaining the independence of the IDS divisions.

The proposed changes do not adversely affect any safety-related equipment or function, design function, radioactive material barrier or safety analysis.

4. Regulatory Evaluation

4.1. Applicable Regulatory Requirements/Criteria

10 CFR 52, Appendix D, Section VIII.B.5.a allows an applicant or licensee who references this appendix to depart from Tier 2 information, without prior NRC approval, unless the proposed departure involves a change to or departure from Tier 1 information, Tier 2* information, or the Technical Specifications, or requires a license amendment under paragraphs B.5.b or B.5.c of this section. This license amendment request proposes changes to the Updated Final Safety Analysis Report (UFSAR), replacing the four Spare Termination Boxes with a single Spare Battery Termination Box. These proposed changes involve revision to COL Appendix C and plant-specific Tier 1 information, and thus require NRC approval for the plant-specific Tier 1 and involved Tier 2 departures.

10 CFR 52.98(f) requires NRC approval for any modification to, addition to, or deletion from the terms and conditions of a COL. This activity involves a change to COL Appendix C and corresponding plant-specific Tier 1 tables. Therefore, this activity requires a proposed amendment to the COL. Accordingly, NRC approval is required prior to making the plant-specific changes in this license amendment request.

10 CFR 50 Appendix A, General Design Criteria 17, *Electric power systems*, states: "An onsite electric power system and an offsite electric power system shall be provided to permit functioning of structures, systems, and components important to safety. The safety function for each system (assuming the other system is not functioning) shall be to provide sufficient capacity and capability to assure that (1) specified acceptable fuel design limits and design conditions of the reactor coolant pressure boundary are not exceeded as a result of anticipated operational occurrences and (2) the core is cooled and containment integrity and other vital functions are maintained in the event of postulated accidents. The onsite electric power supplies, including the batteries, and the onsite electric distribution system, shall have sufficient independence, redundancy, and testability to perform their safety functions assuming a single failure." The IDS is the safety-related onsite electrical power system that, with the proposed changes, supports performance of safety-related functions for each system by supplying a dc load equal to or greater than the most severe switchboard bus load for the required period without recharging. In addition, the proposed changes do not adversely affect independence, redundancy, and testability of the IDS, and because the Spare Battery and Spare Battery Charger can only be connected to one of the four 24 Hour Battery Switchboards or one of the two 72 Hour Battery Switchboards at a time, the IDS remains capable of performing

the required safety functions assuming a single failure. Thus, this criterion remains satisfied.

10 CFR 50 Appendix A, General Design Criteria 18, *Inspection and testing of electric power systems*, states: "Electric power systems important to safety shall be designed to permit appropriate periodic inspections and testing …." The inspection and testing requirements (e.g., IEEE-338, Regulatory Guide 1.41, and Regulatory Guide 1.118) are still met for the IDS with the proposed changes, thus this criterion remains satisfied.

4.2. Precedent

None.

4.3. No Significant Hazards Consideration Determination

The proposed changes revise the Combined License (COL) because of a design change to the Class 1E dc and Uninterruptible Power Supply System (IDS). The design change replaces the four Spare Termination Boxes, which allow manual connection of the Spare Battery Bank and Spare Battery Bank Charger to supply loads of one of the four 24 Hour Battery Switchboards or one of the two 72 Hour Battery Switchboards at a time, with a single Spare Battery Termination Box, and makes minor raceway and cable routing changes. The proposed changes maintain the method used to manually connect the Spare Battery Bank and Spare Battery Bank Charger to supply loads of one of the four 24 Hour Battery Switchboards or one of the two 72 Hour Battery Switchboards at a time while maintaining the independence of the IDS divisions. The proposed changes are the result of final design activities including vendor selection and procurement. This activity involves a proposed amendment to COL Appendix C, and departures from plant-specific Tier 1 and Updated Final Safety Analysis Report (UFSAR) Tier 2 information.

An evaluation to determine whether or not a significant hazards consideration is involved with the proposed amendment was completed by focusing on the three standards set forth in 10 CFR 50.92, "Issuance of amendment," as discussed below:

4.3.1 Does the proposed amendment involve a significant increase in the probability or consequences of an accident previously evaluated?

<u>Response:</u> No

The proposed changes do not affect the operation of any systems or equipment that initiate an analyzed accident or alter any structures, systems, and components (SSC) accident initiator or initiating sequence of events. The IDS design change involves replacing the four Spare Termination Boxes with a single Spare Battery Termination Box, and minor

raceway and cable routing changes. The proposed changes maintain the method used to manually connect the Spare Battery Bank and Spare Battery Bank Charger to supply loads of one of the four 24 Hour Battery Switchboards or one of the two 72 Hour Battery Switchboards at a time while maintaining the independence of the IDS divisions. Therefore, the probabilities of the accidents evaluated in the UFSAR are not affected.

The proposed changes do not have an adverse impact on the ability of the IDS equipment to perform its design functions. The design of the IDS equipment continues to meet the same regulatory acceptance criteria, electrical codes, and standards as required by the UFSAR. Therefore, the proposed changes do not affect the prevention and mitigation of other abnormal events, e.g., accidents, anticipated operational occurrences, earthquakes, floods and turbine missiles, or their safety or design analyses. In addition, the proposed changes do not have an adverse effect on any safety-related SSC or function used to mitigate an accident; therefore, the consequences of the accidents evaluated in the UFSAR are not affected.

Therefore, the proposed changes do not involve a significant increase in the probability or consequences of an accident previously evaluated.

4.3.2 Does the proposed amendment create the possibility of a new or different kind of accident from any accident previously evaluated?

Response: No

The proposed changes do not change the design functions of IDS or any of the systems or equipment in the plant. The IDS design change involves replacing the four Spare Termination Boxes with a single Spare Battery Termination Box, and minor raceway and cable routing changes, and the electrical equipment continues to perform its design functions because the same electrical codes and standards as stated in the UFSAR continue to be met. The proposed changes maintain the method used to manually connect the Spare Battery Bank and Spare Battery Bank Charger to supply loads of one of the four 24 Hour Battery Switchboards or one of the two 72 Hour Battery Switchboards at a time while maintaining the independence of the IDS divisions. These proposed changes do not adversely affect any IDS or SSC design functions or methods of operation in a manner that results in a new failure mode, malfunction, or sequence of events that affect safety-related or non-safety-related equipment. Therefore, this activity does not allow for a new fission product release path, result in a new fission product barrier failure mode, or create a new sequence of events that result in significant fuel cladding failures.

Therefore, the proposed changes do not create the possibility of a new or different kind of accident from any accident previously evaluated.

4.3.3 Does the proposed amendment involve a significant reduction in a margin of safety?

Response: No

The proposed changes maintain existing safety margins. The proposed changes do not result in changes to the IDS design requirements or design functions. The proposed changes maintain existing safety margin through continued application of the existing requirements of the UFSAR. Therefore, the proposed changes satisfy the same design functions in accordance with the same codes and standards as stated in the UFSAR. These proposed changes do not affect any design code, function, design analysis, safety analysis input or result, or design/safety margin.

Because no safety analysis or design basis acceptance limit/criterion is challenged or exceeded by these proposed changes, no margin of safety is reduced. Therefore, the proposed changes do not involve a significant reduction in a margin of safety.

Conclusions

In conclusion, based on the considerations discussed above, (1) there is reasonable assurance that the health and safety of the public will not be endangered by operation in the proposed manner, (2) such activities will be conducted in compliance with the Commission's regulations, and (3) the issuance of the amendment will not be inimical to the common defense and security or to the health and safety of the public. Pursuant to 10 CFR 50.92, the requested change does not involve a Significant Hazards Consideration.

5. Environmental Considerations

Sections 2 and 3 of this license amendment request provide the details of the proposed changes.

This review supports a request to amend the Combined License (COL) for the Licensee, and to allow departure from Tier 2 of the AP1000 Design Control Document (DCD) in the Updated Final Safety Analysis Report (UFSAR), and involves changes to COL Appendix C and departure from plant-specific Tier 1 material. The proposed amendment changes the design of the Class 1E dc and Uninterruptible Power Supply System (IDS). The design change replaces the four Spare Termination Boxes, which allow manual connection of the Spare Battery Bank and Spare Battery Bank Charger to supply loads

of one of the four 24 Hour Battery Switchboards or one of the two 72 Hour Battery Switchboards at a time, with a single Spare Battery Termination Box, and makes minor raceway and cable routing changes. The design change maintains the method used to manually connect the Spare Battery Bank and Spare Battery Bank Charger to supply loads of one of the four 24 Hour Battery Switchboards or one of the two 72 Hour Battery Switchboards at a time while maintaining the independence of the IDS divisions. The design change is the result of final design activities including vendor selection and procurement. These physical changes are collectively called "proposed changes."

The Licensee has determined that the anticipated construction and operational effects of the proposed amendment meet the eligibility criteria for categorical exclusion set forth in 10 CFR 51.22(c)(9), in that:

(i) There is no significant hazards consideration.

As documented in Section 4.3, No Significant Hazards Consideration Determination, of this license amendment request, an evaluation was completed to determine whether or not a significant hazards consideration is involved by focusing on the three standards set forth in 10 CFR 50.92, "Issuance of amendment." The No Significant Hazards Consideration determined that (1) the proposed amendment does not involve a significant increase in the probability or consequences of an accident previously evaluated; (2) the proposed amendment does not create the possibility of a new or different kind of accident from any accident previously evaluated; and (3) the proposed amendment does not involve a significant reduction in a margin of safety. Therefore, it is concluded that the proposed amendment does not involve a significant hazards consideration under the standards set forth in 10 CFR 50.92(c), and accordingly, a finding of "no significant hazards consideration" is justified.

(ii) There is no significant change in the types or significant increase in the amounts of any effluents that may be released offsite.

The proposed changes involve replacing the four Spare Termination Boxes with a single Spare Battery Termination Box, and making minor raceway and cable routing changes. The proposed changes maintain the method used to manually connect the Spare Battery Bank and Spare Battery Bank Charger to supply loads of one of the four 24 Hour Battery Switchboards or one of the two 72 Hour Battery Switchboards at a time while maintaining the independence of the IDS divisions. Therefore, the proposed changes are unrelated to any aspect of plant construction or operation that introduces any change to effluent types (e.g., effluents containing chemicals or biocides, sanitary system effluents, and other effluents), or affect any plant radiological or non-radiological effluent release quantities. Furthermore, the proposed changes do not diminish the functionality of any design or operational features that are credited with controlling the release of effluents during plant operation. Therefore, it is concluded that the proposed

amendment does not involve a significant change in the types or a significant increase in the amounts of any effluents that may be released offsite.

(iii) There is no significant increase in individual or cumulative occupational radiation exposure.

The proposed changes only affect non-radioactive systems and areas of the plant that contain non-radioactive plant systems. Consequently, the proposed changes have no effect on individual or cumulative occupational radiation exposure during plant operation. Therefore, it is concluded that the proposed amendment does not involve a significant increase in individual or cumulative occupational radiation exposure.

Based on the above review of the proposed amendment, it has been determined that anticipated construction and operational effects of the proposed amendment do not involve (i) a significant hazards consideration, (ii) a significant change in the types or significant increase in the amounts of any effluents that may be released offsite, or (iii) a significant increase in the individual or cumulative occupational radiation exposure. Accordingly, the proposed amendment meets the eligibility criteria for categorical exclusion set forth in 10 CFR 51.22(c)(9). Therefore, pursuant to 10 CFR 51.22(b), an environmental impact statement or environmental assessment of the proposed exemption and proposed amendment is not required.

6. References

None

Southern Nuclear Operating Company

Vogtle Electric Generating Plant (VEGP) Units 3 and 4

ND-15-0637

Enclosure 2

Exemption Request for

Consolidation of IDS Spare Termination Boxes

(LAR-15-004)

(This Enclosure contains 7 pages, including this cover)

1.0 Purpose

Southern Nuclear Operating Company (the Licensee), requests a permanent exemption from the provisions of 10 CFR 52, Appendix D, Section III.B, "Design Certification Rule for the AP1000 Design, Scope and Contents," to allow a departure from elements of the certification information in Tier 1 of the plant-specific AP1000 Design Control Document (DCD). The regulation, 10 CFR 52, Appendix D, Section III.B, requires an applicant or licensee referencing Appendix D to 10 CFR Part 52 to incorporate by reference and comply with the requirements of the Appendix, including certified information in DCD Tier 1. Tier 1 includes ITAAC that must be satisfactorily performed prior to fuel load. The design details to be verified by these ITAAC are specified in the text, tables, and figures that are referenced in each individual ITAAC. The Tier 1 information for which a departure and permanent exemption is being requested includes information specified in plant-specific Tier 1 tables related to the design of the Class 1E dc and Uninterruptible Power Supply System (IDS).

This request for permanent exemption will apply the requirements of 10 CFR 52, Appendix D, Section VIII.A.4 to allow changes to information found in plant-specific Tier 1 Tables 2.6.3-1 and 2.6.3-4 as follows:

- Table 2.6.3-1: Revise the table to delete Spare Termination Boxes IDSS-DF-2, IDSS-DF-4, and IDSS-DF-5 and their associated information. Rename Spare Termination Box IDSS-DF-3 as Spare Battery Termination Box IDSS-DF-3.

- Table 2.6.3-4: Revise the table to delete Spare Termination Boxes IDSS-DF-2, IDSS-DF-4, and IDSS-DF-5 and their associated information. Rename Spare Termination Box IDSS-DF-3 as Spare Battery Termination Box IDSS-DF-3.

This request will apply the requirements for granting exemptions from design certification information, as specified in 10 CFR 52, Appendix D, Section VIII.A.4, 10 CFR 52.63, §52.7, and §50.12.

2.0 Background

The Licensee is the holder of Combined License (COL) Nos. NPF-91 and NPF-92, which authorize construction and operation of two Westinghouse Electric Company AP1000 nuclear plants, named Vogtle Electric Generating Plant (VEGP) Units 3 & 4, respectively.

Plant-specific Tier 1 Tables 2.6.3-1 and 2.6.3-4 identify four Spare Termination Boxes as part of the IDS design, which are listed with Tag Nos. IDSS-DF-2, IDSS-DF-3, IDSS-DF-4, and IDSS-DF-5. These Spare Termination Boxes provide a connection point for any one of the fused transfer switch boxes in the IDS (four 24 Hour Battery Switchboards, and two 72 Hour Battery Switchboards) to a source of safety-related

backup dc power during maintenance activities or in the event of failure of any one of the other IDS batteries.

Specific IDS design changes are required as the result of equipment consolidation and detailed design finalization of the IDS system. These specific changes would consolidate the number of Spare Termination Boxes from four to one and list IDSS-DF-3 as the only Spare Battery Termination Box in plant-specific Tier 1 Tables 2.6.3-1 and 2.6.3-4.

A permanent exemption from elements of the AP1000 certified design information is requested to allow the Licensee to depart from the design details contained in these Tier 1 tables.

3.0 Technical Justification of Acceptability

The proposed change to replace four IDS Spare Termination Boxes with a single Spare Battery Termination Box results in changes to plant-specific Tier 1 Table 2.6.3-1, which identifies whether the equipment is seismic, Class 1E, environmentally qualified, or has MCR safety related displays; and plant-specific Tier 1 Table 2.6.3-4, which identifies the location of IDS Components. The purpose of providing the information in these plant-specific Tier 1 tables is to identify the information to be confirmed during construction by the ITAAC in plant-specific Tier 1 2.6.3-3.

Despite reducing the number of Spare Termination Boxes from four to one, the function of these termination boxes is maintained, and the single Spare Battery Termination Box continues to provide a connection point between any one of the IDS fused transfer switch boxes and a safety-related source of backup dc power.

Additional detail for supporting the Technical Justification of this exemption is provided in Enclosure 1, Section 3, of the accompanying License Amendment Request.

4.0 Justification of Exemption

10 CFR Part 52, Appendix D, Section VIII.A.4 and 10 CFR 52.63(b)(1) govern the issuance of exemptions from elements of the certified design information for AP1000 nuclear power plants. The Licensee has identified necessary changes to plant-specific Tier 1 information during IDS design finalization activities. As a result, the Licensee requests a permanent exemption from the certified design information in plant-specific Tier 1, pursuant to the above regulations, to allow the implementation of a departure.

10 CFR Part 52, Appendix D, and 10 CFR 50.12, §52.7, and §52.63 state that the NRC may grant exemptions from the requirements of the regulations provided six conditions are met: 1) the exemption is authorized by law [§50.12(a)(1)]; 2) the exemption will not present an undue risk to the health and safety of the public [§50.12(a)(1)]; 3) the exemption is consistent with the common defense and security [§50.12(a)(1)]; 4) special circumstances are present [§50.12(a)(2)(ii)]; 5) the special circumstances outweigh any decrease in safety that may result from the reduction in standardization caused by the

exemption [§52.63(b)(1)]; and 6) the design change will not result in a significant decrease in the level of safety [Part 52, App. D, VIII.A.1].

The requested exemption to allow the licensee to change the design of the Class 1E dc and Uninterruptible Power Supply System satisfies the six criteria for granting specific exemptions, as described below.

1. **This exemption is authorized by law**

   The NRC has authority under 10 CFR §§ 50.12, 52.7, and 52.63 to grant exemptions from the requirements of NRC regulations. Specifically, 10 CFR §§50.12 and 52.7 state that the NRC may grant exemptions from the requirements of 10 CFR Part 52 upon a proper showing. No law exists that would preclude the changes covered by this exemption request. Additionally, granting of the proposed exemption does not result in a violation of the Atomic Energy Act of 1954, as amended, or the Commission's regulations.

   Accordingly, this requested exemption is "authorized by law," as required by 10 CFR 50.12(a)(1).

2. **This exemption will not present an undue risk to the health and safety of the public**

   The proposed exemption from the requirements of 10 CFR 52, Appendix D, Section III.B would allow the Licensee to depart from elements of the plant-specific DCD Tier 1 design information. The plant-specific Tier 1 material will continue to reflect the approved licensing basis, and will maintain a consistent level of detail with that which is currently provided elsewhere in Tier 1 of the plant-specific DCD. Therefore, no adverse safety impact which would present any additional risk to the health and safety of the public is present. The affected design description in the plant-specific Tier 1 material will also continue to provide the detail necessary to support the performance of the associated ITAAC.

   This proposed change will not impact the ability of the SSCs to perform their design functions. Because the changes will not alter the operation of any plant equipment or systems, they do not present any undue risk from existing equipment or systems. The proposed changes do not introduce any new industrial, chemical, or radiological hazards that would represent a public health or safety risk, nor do they modify or remove any design or operational controls or safeguards that are intended to mitigate any existing on-site hazards. Furthermore, the proposed changes would not allow for a new fission product release path, result in a new fission product barrier failure mode, or create a new sequence of events that would result in fuel cladding failures. Accordingly, these changes do not present an undue risk from any new equipment or systems.

   Therefore, the requested exemption from 10 CFR 52, Appendix D, Section III.B would not present an undue risk to the health and safety of the public.

3. The exemption is consistent with the common defense and security

The requested exemption from the requirements of 10 CFR 52, Appendix D, Section III.B would allow the licensee to depart from elements of the plant-specific DCD Tier 1 design information. The proposed exemption does not alter the design, function, or operation of any structures or plant equipment that are necessary to maintain a safe and secure status of the plant. The proposed exemption has no impact on plant security or safeguards procedures.

Therefore, the requested exemption is consistent with the common defense and security.

4. Special circumstances are present

10 CFR 50.12(a)(2) lists six "special circumstances" for which an exemption may be granted. Pursuant to the regulation, it is necessary for one of these special circumstances to be present in order for the NRC to consider granting an exemption request. The requested exemption meets the special circumstances of 10 CFR 50.12(a)(2)(ii). That subsection defines special circumstances as when “Application of the regulation in the particular circumstances would not serve the underlying purpose of the rule or is not necessary to achieve the underlying purpose of the rule.”

The rule under consideration in this request for exemption is 10 CFR 52, Appendix D, Section III.B, which requires that a licensee referencing the AP1000 Design Certification Rule (10 CFR Part 52, Appendix D) shall incorporate by reference and comply with the requirements of Appendix D, including Tier 1 information. The VEGP Units 3 & 4 COLs reference the AP1000 Design Certification Rule and incorporate by reference the requirements of 10 CFR Part 52, Appendix D, including Tier 1 information. The underlying purpose of Appendix D, Section III.B is to describe and define the scope and contents of the AP1000 design certification, and to require compliance with the design certification information in Appendix D.

The proposed changes to consolidate the IDS Spare Termination Boxes into a single Spare Battery Termination Box maintains the design function of the IDS Spare Termination Boxes in providing a safety-related connection between a source of safety-related backup dc power and any one of the fused transfer switch boxes. The changes do not impact the ability of any structures, systems, or components to perform their functions or negatively impact safety. Additionally, no new design functions are added and no current function is deleted while the more appropriately designed Spare Battery Termination Box is employed for this application.

Accordingly, this exemption from the plant-specific certification information will allow the Licensee to safely construct and operate the AP1000 facility consistent with the design certified by the NRC in 10 CFR 52, Appendix D.

Therefore, special circumstances are present, because application of the current Tier 1 certified design information as required by 10 CFR Part 52, Appendix D,

Section III.B, in the particular circumstances discussed in this request, is not necessary to achieve the underlying purpose of the rule.

5. **The special circumstances outweigh any decrease in safety that may result from the reduction in standardization caused by the exemption**

   Based on the nature of the proposed departure from the plant-specific DCD Tier 1 information, it is likely that other AP1000 licensees will request this exemption. However, if this is not the case, the special circumstances continue to outweigh any decrease in safety from the reduction in standardization because the proposed change implements a more appropriate Spare Battery Termination Box design, which maintains the design function of the IDS and the Spare Termination Boxes to provide a safety-related connection point between a source of backup dc power and any one of the fused transfer switch boxes within the IDS. This exemption request and the associated marked-up tables demonstrate that the applicable regulatory requirements will continue to be met. Consequently, the safety impact that may result from any reduction in standardization is minimized, since the proposed design change does not result in a reduction in the level of safety.

   Therefore, the special circumstances associated with the requested exemption outweigh any decrease in safety that may result from the reduction in standardization caused by the exemption.

6. **The design change will not result in a significant decrease in the level of safety.**

   This exemption request proposes to allow the Licensee to revise the plant-specific DCD Tier 1 information by departing from the certified design in allowing the use of a single consolidated Spare Battery Termination Box in lieu of several separate Spare Termination Boxes. The consolidated IDS Spare Battery Termination Box continues to support the IDS design function by providing a connection point between an IDS Spare Battery and any one of the fused transfer switch boxes within the IDS. The design change associated with this exemption request does not introduce any new failure mode and the level of safety provided by the SSCs remains unchanged.

   Because the proposed changes to the SSCs will not adversely affect their ability to perform their design functions, it is concluded that the changes associated with the proposed exemption will not result in a significant decrease in the level of safety.

5.0 Risk Assessment

A risk assessment was determined to be not applicable to address the acceptability of this request.

6.0 Precedent

None.

7.0 Environmental Consideration

A review of the requested amendment, has determined that anticipated construction and operational effects of the proposed amendment do not involve (i) a significant hazards consideration, (ii) a significant change in the types or significant increase in the amounts of any effluents that may be released offsite, or (iii) a significant increase in the individual or cumulative occupational radiation exposure. Accordingly, the requested amendment meets the eligibility criteria for categorical exclusion set forth in 10 CFR 51.22(c)(9). Therefore, pursuant to 10 CFR 51.22(b), an environmental impact statement or environmental assessment of the proposed amendment and exemption is not required.

8.0 Conclusion

The Licensee requests a permanent exemption from elements of the AP1000 design certification information within plant-specific Tier 1 material. The proposed changes to Tier 1 are necessary to allow the consolidation of four IDS Spare Termination Boxes into a single Spare Battery Termination Box, which would continue to provide a connection point between a safety-related source of backup dc power and any one of the fused transfer switch boxes within the IDS. The exemption request meets the requirements of 10 CFR 52.63, "*Finality of Design Certifications,*" 10 CFR 50.12, "*Specific Exemptions,*" and 10 CFR 52 Appendix D, "*Design Certification Rule for the AP1000.*" Specifically, the exemption request meets the criteria of 10 CFR 50.12(a)(1) in that the request is authorized by law, presents no undue risk to public health and safety, and is consistent with the common defense and security. Furthermore, approval of this request does not result in a decrease in the level of safety, does not present a significant decrease in safety as a result of a reduction in standardization, and meets the eligibility requirements for categorical exclusion.

9.0 References

None.

Southern Nuclear Operating Company

Vogtle Electric Generating Plant (VEGP) Units 3 and 4

ND-15-0637

Enclosure 3

Proposed Changes to Licensing Basis Documents

(LAR-15-004)

Insertions Denoted by Blue Underline and Deletions by Red Strikethrough

(Note that the sheet numbers and the total number of sheets for the marked-up Tables provided in this Enclosure may be changed by the incorporation of this and other departures. These changes are considered editorial and do not require evaluation in this submittal.)

(This Enclosure contains 5 pages, including this cover)

COL Appendix C Table 2.6.3-1 and corresponding Plant-Specific Tier 1 Table 2.6.3-1, Class 1E dc and Uninterruptible Power Supply System

Revise table as shown below:

Table 2.6.3-1 (cont.)				
Equipment Name	**Tag No.**	**Seismic Cat. I**	**Class 1E/ Qual. for Harsh Envir.**	**Safety-Related Display**
…	…	…	…	…
Division D 24-Hour Inverter 1	IDSD-DU-1	Yes	Yes/No	No
~~Spare Termination Box 2~~	~~IDSS-DF-2~~	~~Yes~~	~~Yes/No~~	~~No~~
Spare **Battery** Termination Box ~~3~~	IDSS-DF-3	Yes	Yes/No	No
~~Spare Termination Box 4~~	~~IDSS-DF-4~~	~~Yes~~	~~Yes/No~~	~~No~~
~~Spare Termination Box 5~~	~~IDSS-DF-5~~	~~Yes~~	~~Yes/No~~	~~No~~

COL Appendix C Table 2.6.3-4 and corresponding Plant-Specific Tier 1 Table 2.6.3-4, Class 1E dc and Uninterruptible Power Supply System

Revise table as shown below:

Table 2.6.3-4 (cont.)		
Component Name	**Tag No.**	**Component Location**
…	…	…
Division D 24-Hour Inverter 1	IDSD-DU-1	Auxiliary Building
~~Spare Termination Box 2~~	~~IDSS-DF-2~~	~~Auxiliary Building~~
Spare **Battery** Termination Box ~~3~~	IDSS-DF-3	Auxiliary Building
~~Spare Termination Box 4~~	~~IDSS-DF-4~~	~~Auxiliary Building~~
~~Spare Termination Box 5~~	~~IDSS-DF-5~~	~~Auxiliary Building~~

UFSAR Table 3.11-1, Sheet 4 of 51, Environmentally Qualified Electrical and Mechanical Equipment

Revise table as shown below:

Table 3.11-1 (Sheet 4 of 51) Environmentally Qualified Electrical and Mechanical Equipment					
Description	**AP1000 Tag No.**	**Envir. Zone (Note 2)**	**Function (Note 1)**	**Operating Time Required (Note 5)**	**Qualification Program (Note 6)**
IDSS Fused Transfer Switch Box 1 (Spare)	IDSS-DF-1	2	RT ESF PAMS	5 min 24 hr 72 hr	E
~~IDSS Spare Termination Box~~	~~IDSS-DF-2~~	~~2~~	~~RT~~ ~~ESF~~ ~~PAMS~~	~~5 min~~ ~~24 hr~~ ~~24 hr~~	~~E~~
IDSS Spare **Battery** Termination Box	IDSS-DF-3	2	RT ESF PAMS	5 min 24 hr 72 hr	E
~~IDSS Spare Termination Box~~	~~IDSS-DF-4~~	~~2~~	~~RT~~ ~~ESF~~ ~~PAMS~~	~~5 min~~ ~~24 hr~~ ~~72 hr~~	~~E~~
~~IDSS Spare Termination Box~~	~~IDSS-DF-5~~	~~2~~	~~RT~~ ~~ESF~~ ~~PAMS~~	~~5 min~~ ~~24 hr~~ ~~24 hr~~	~~E~~
…					

UFSAR Table 3I.6-2, Sheet 3 of 28, List of Potential High Frequency Sensitive AP1000 Safety-Related Electrical and Electro-Mechanical Equipment

Revise table as shown below:

Table 3I.6-2 (Sheet 3 of 28) List of Potential High Frequency Sensitive AP1000 Safety-Related electrical and electro-mechanical Equipment	
Description	**AP1000 Tag Number**
Transfer Switches	
IDSA Fused Transfer Switch Box 1	IDSA-DF-1
IDSB Fused Transfer Switch Box 1	IDSB-DF-1
IDSB Fused Transfer Switch Box 2	IDSB-DF-2
IDSC Fused Transfer Switch Box 1	IDSC-DF-1
IDSC Fused Transfer Switch Box 2	IDSC-DF-2
IDSD Fused Transfer Switch Box 1	IDSD-DF-1
IDSS Fused Transfer Switch Box 1	IDSS-DF-1
~~**IDSS Spare Termination Box**~~	~~**IDSS-DF-2**~~
IDSS Spare **Battery** Termination Box	IDSS–DF-3
~~**IDSS Spare Termination Box**~~	~~**IDSS-DF-4**~~
~~**IDSS Spare Termination Box**~~	~~**IDSS-DF-5**~~
…	

UFSAR Tier 2 Figure 8.3.2-1, Sheet 2 of 2, Class 1E DC System One Line Diagram, excerpt from lower-center portion

Revise figure as shown below:

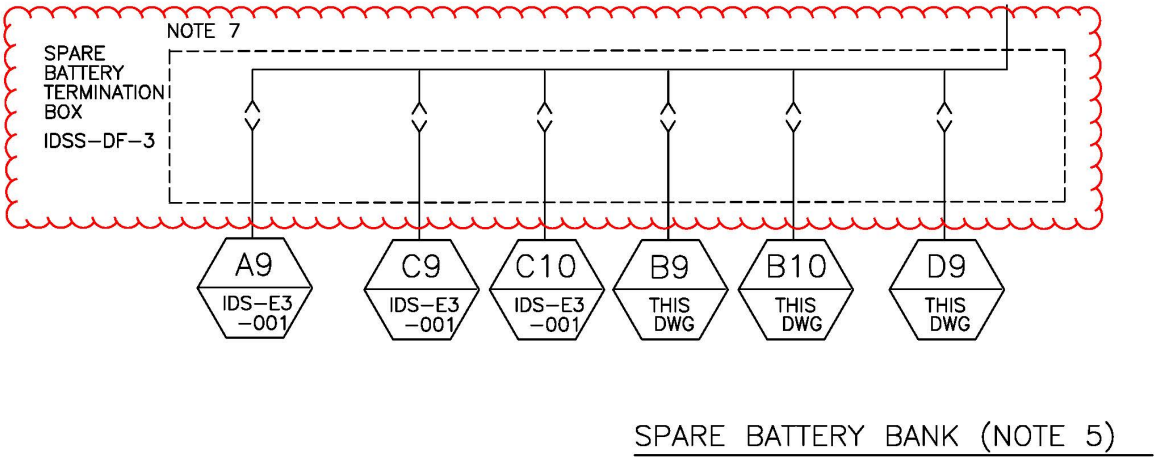

UFSAR Tier 2 Figure 8.3.2-1, Sheet 2 of 2, Class 1E DC System One Line Diagram, excerpt from NOTES in upper-right corner

Revise Note 7 as shown below:

7. PLUG-IN LOCKING TYPE DISCONNECT IS PROVIDED TO CONNECT TO THE SPARE **BATTERY** TERMINATION BOX, IDSS-DF-~~2~~ **3** ~~(IDSS-DF-3,4 OR 5)~~.