NUREG/BR-0133
Rev. 2

February 1996

Working Safely with Nuclear Gauges

U.S. Nuclear Regulatory Commission

TABLE OF CONTENTS

	Page
1. INTRODUCTION	1
1.1 NRC and the Agreement States	1
2. WHAT IS RADIATION?	3
2.1 Radiation Is All Around Us	3
2.2 How Ionizing Radiation Occurs	5
2.3 Radiation from A to X	7
2.4 Using Radiation Safely	9
3. NUCLEAR GAUGES	9
3.1 Fixed Gauges	9
3.2 Portable Gauges	11
3.3 The Strength of the Source	13
4. ARE NUCLEAR GAUGES SAFE?	13
4.1 Principles of Radiation Protection	15
4.2 Keeping Track of Your Radiation Dose	15
4.3 Under the Limit	17
4.4 Registration, Licensing, Inspection, and Testing	18
5. PROPER USE OF NUCLEAR GAUGES	18
6. EMERGENCY PROCEDURES	23
7. TRANSPORTATION	23
GLOSSARY OF TERMS	25

For sale by the Superintendent of Documents, U.S. Government Printing Office
Washington, D.C. 20402

Stock No. 052-024-00001-3

1. INTRODUCTION

This booklet is the result of a cooperative effort between the Office of Public Affairs and the Office of Nuclear Material Safety and Safeguards, both of the U.S. Nuclear Regulatory Commission (NRC). This document was largely adapted from the Atomic Energy Control Board of Canada publication "Working Safely with Nuclear Gauges."

This publication contains guidelines on the proper handling and use of fixed and portable nuclear gauges, and provides background information about radiation for people who use and work around this equipment. It is intended to provide information to gauge licensees for use in their user training programs. Information may be added or deleted to fit their specific training programs as needed.

Much of this information, particularly that on radiation, is not usually found in the standard operating manuals for nuclear gauges. As a result, you may be unsure about the possible dangers from radiation, and uneasy about using or working near gauges that contain a radioactive source. After reading this booklet, you should be able to work confidently and safely around nuclear gauges.

Remember that this booklet is meant only as a general guide. For step-by-step instructions and complete regulations, it is best to check your operating manual and the license that NRC or the Agreement State issued you for the specific gauge you are using.

1.1 NRC and the Agreement States

NRC is the Federal agency responsible for ensuring the safety of people who work with radioactive material and the security of certain radioactive materials. To control the risks associated with the use of nuclear energy, NRC sets strict health and safety

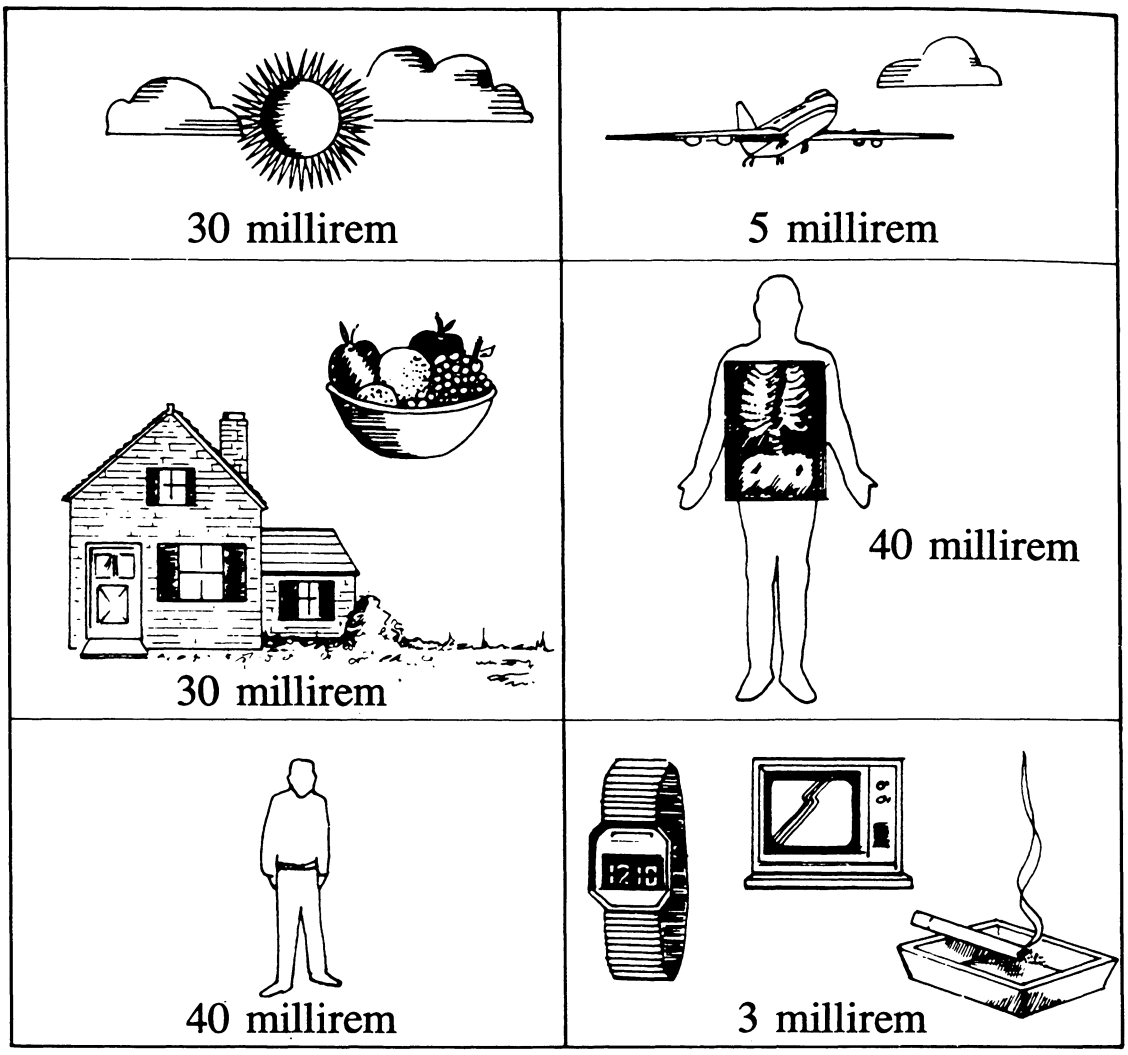

Natural radiation		**Man-made radiation**	
Examples		*Examples*	
Cosmic rays:	*30 millirem*	*6,000 miles jet flight:*	*5 millirem*
Soil:	*30 millirem*	*Medical X-rays:*	*40 millirem*
Body:	*40 millirem*	*Misc. products:*	*3 millirem*
		Fallout:	*4 millirem*
Total dose/yr:	*100 millirem*	*Total dose/yr:*	*52 millirem*

Accumulated dose/yr: 152 millirem
(Note: 1 millirem equals 0.001 rem)

standards for nuclear equipment, defines allowable limits for radiation exposure, and frequently conducts inspections of nuclear products and facilities.

As of December 1995, NRC has entered into agreements with 29 states that give them authority to regulate radioactive materials used or possessed within their borders. Such states are called Agreement States. The regulator of radioactive materials in your jurisdiction may be either the NRC or an Agreement State and, hereafter, is simply referred to as the Agency.

For more information about NRC, please phone (301) 415-8200 or write to: Office of Public Affairs, U.S. Nuclear Regulatory Commission, Washington, DC 20555-0001. Questions about gauge licensing and regulation should be directed to the Agency. Specific questions or comments about this booklet should be directed to Mr. Steven Baggett at the above address.

2. WHAT IS RADIATION?

To understand nuclear gauges, you must first understand some basic facts about radiation, its origins, and its possible effects.

2.1 Radiation Is All Around Us

Quite simply, radiation is a form of energy. Radiation comes from atoms, the building blocks of all matter, and is around us all the time.

Although many of us associate the word "radiation" with danger and illnesses such as cancer, radiation is not necessarily harmful. Burning a log, for example, gives off radiant energy (radiation) in the form of both heat and light. And when you lie in the sun too long, you can get a sunburn, which is a mild radiation burn. However, the hazards that come to mind when you think of radiation are most often associated with what is called "ionizing radiation."

Atom

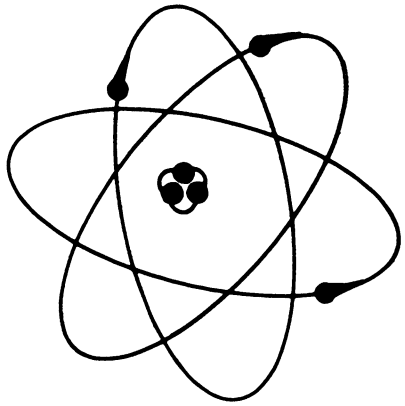

Decay

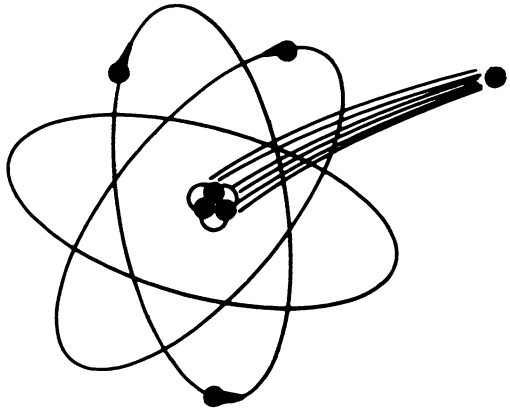

When an atom's structure breaks down, as shown here by a particle leaving the atom, the atom releases energy as ionizing radiation. This radioactive decay continues until the atom changes to a stable form.

We are all exposed to ionizing radiation every day. In fact, natural background radiation—from soil and rocks, from the food we eat, from the houses we live in, from cosmic rays, even from our own bodies—contributes to about two-thirds of our annual radiation exposure. Although we cannot control natural background radiation, the amount we receive each year is so low that it presents few health hazards.

We are also exposed to several man-made sources of ionizing radiation through our daily activities. These include watching television, smoking, having an X-ray at your doctor's or dentist's office, or wearing certain luminous dial watches. Other activities increase our exposure to natural radiation. For example, airplane flights expose us to increased cosmic rays. However, we can control the amount of radiation we receive from these sources by simply limiting the related activities.

The chart on page 2 shows how much ionizing radiation we normally receive from various natural and man-made sources. Doses are given in millirem, which is the traditional unit for measuring the amount of radiation the body absorbs.

2.2 How Ionizing Radiation Occurs

Most ionizing radiation results when the structure of an atom's electrons, neutrons and protons break down. This can happen when some form of ionizing radiation collides with a normal atom, or when an unstable atom (called a radioisotope) decays or breaks down on its own. Radioisotopes release energy in the form of ionizing radiation repeatedly over a specific length of time, until all the atoms become stable.

The way that an atom releases radiation can be compared to a flash bulb on a camera going off. When a bulb is triggered, energy is released as a flash of light. The bulb then changes its form to a spent bulb and is no longer capable of flashing.

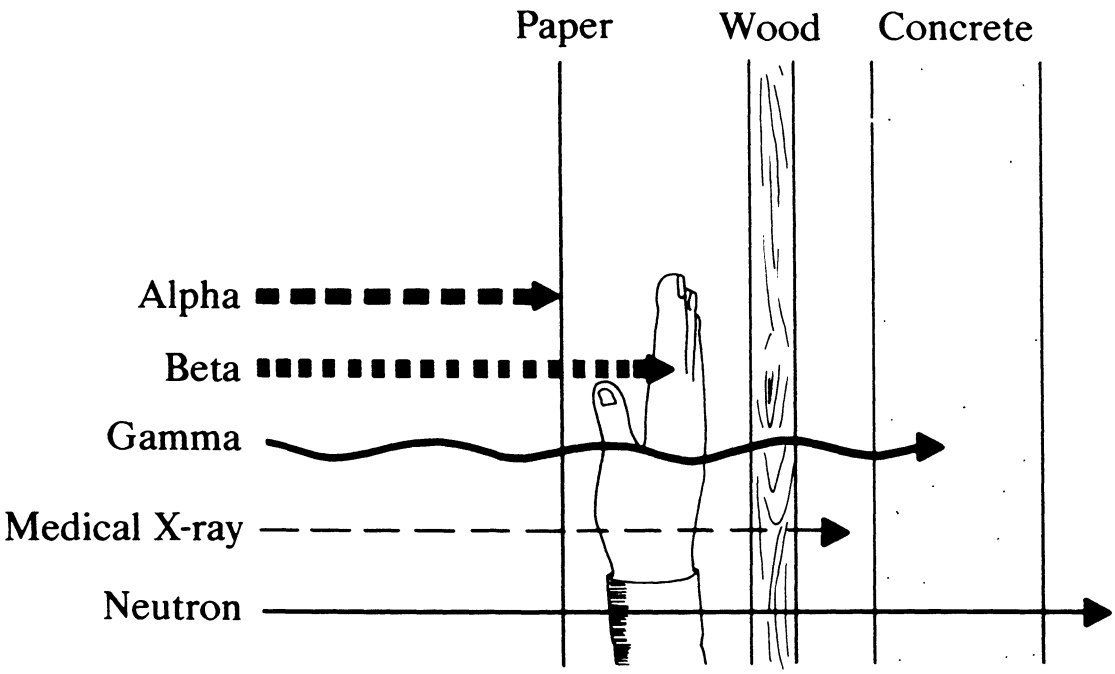

The various types of ionizing radiation have different penetrating powers. This portrays the ability of different forms of ionizing radiation to penetrate paper, the human body, wood, and concrete.

The release of ionizing radiation is similar, except that there is no visible flash. A decaying atom gives off energy as radiation and then changes into a new form. However, unlike the flash bulb, you cannot see radiation and cannot tell that the new form of atom is still decaying and capable of giving off radioactive energy. A radioisotope may undergo several changes and release radiation over a long period of time before changing to a stable form.

2.3 Radiation from A to X

Here are the main types of ionizing radiation:

- **Alpha radiation:** large atomic particles that both natural elements and some man-made substances emit—alpha radiation has little external penetrating power, but can be harmful if you breathe or swallow radioactive elements.

- **Beta radiation:** fast-moving atomic particles with little penetrating power—beta radiation is frequently found inside a medical or research environment.

- **Gamma radiation:** electromagnetic waves resulting from radioactive decay—this type of radiation has greater penetrating power than medical X-rays, and is often used in fixed and portable nuclear gauges.

- **Cosmic radiation:** these are highly energetic atomic particles that originate from the sun and stars and penetrate the earth's atmosphere.

- **Neutron radiation:** penetrating atomic particles that result from collisions between cosmic rays and atoms in the atmosphere, and from some specialized man-made sources—this type of radiation is often used in portable nuclear gauges.

- **X-rays:** machine-generated electromagnetic waves that can penetrate the human body—this type of radiation is used

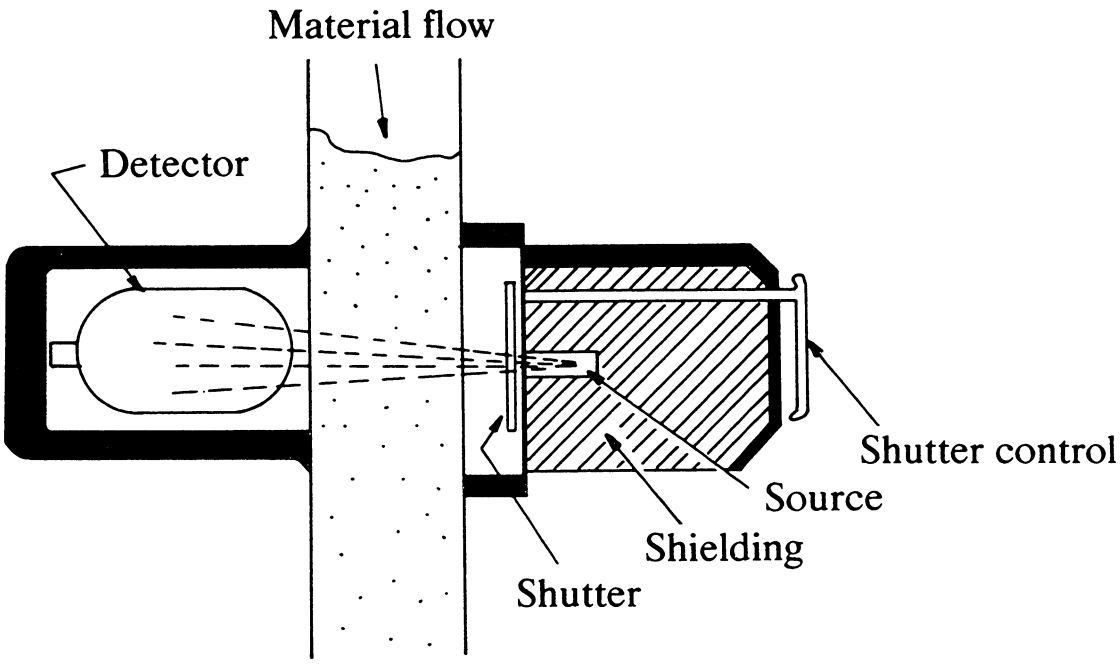

Fixed gauges are widely used today in factories and processing environments to ensure quality control. Radiation is released by a shutter being opened; the radiation passes through the material; and then a detector mounted opposite the source measures it. The amount of radiation detected indicates the thickness or density of the material.

primarily in hospitals and dentists' offices, and is also used in some industrial environments.

2.4 Using Radiation Safely

All types of ionizing radiation can be harmful. Long-term exposure to a small source of constant radiation, or short-term exposure to a large amount of radiation can cause damage to our cellular structure or tissue. However, these risks can be minimized and controlled, allowing radioactive sources to be used safely for many productive purposes. The following section describes such a purpose, the use of radiation in nuclear gauges.

3. NUCLEAR GAUGES

Today, many industries use equipment such as nuclear measuring gauges that incorporate a radioactive source. These nuclear gauges provide an inexpensive, yet highly reliable and accurate method of measuring the thickness, density, or make-up of a wide variety of material or surfaces. There are two types of nuclear gauges, fixed and portable.

3.1 Fixed Gauges

Fixed gauges are most often used in factories as a way of monitoring a production process and ensuring quality control. In many processes, either products cannot be effectively checked by traditional methods requiring direct contact, or a non-destructive measuring technique is desired. In these situations, a nuclear gauge can be inserted into the process to provide precise measurements of thickness or density.

These fixed gauges consist of a radioactive source that is housed within a source holder and placed at a crucial point in the process. When the source holder's shutter is opened, an invisible beam of radiation is directed at the material being processed.

Direct transmission

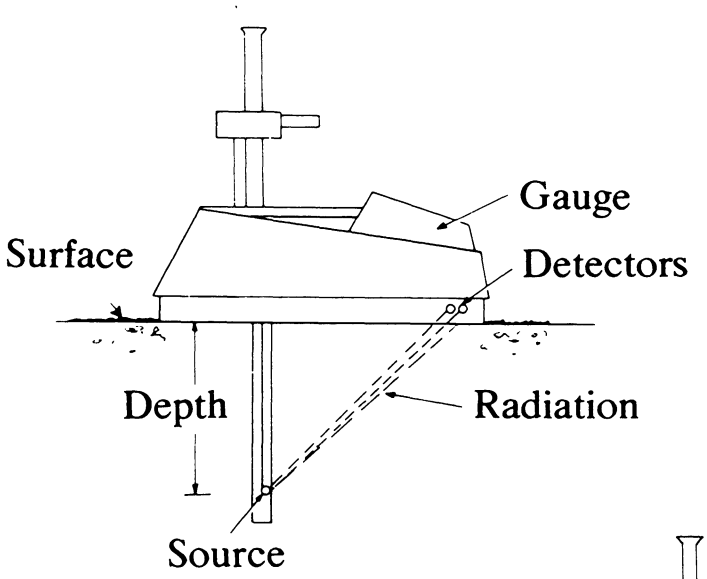

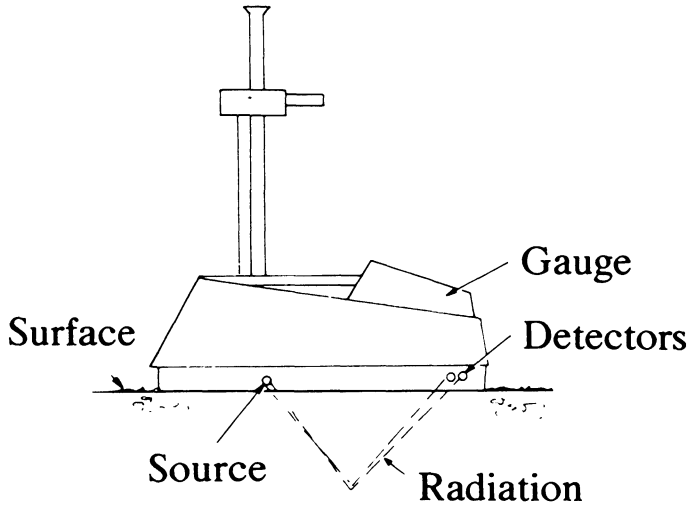

Backscatter

The use of portable gauges is widespread in industries such as agriculture and construction. In the illustration on the left, the gamma source is placed underneath the surface of the ground through a tube. Radiation is then transmitted directly to the detector on the bottom of the gauge, allowing accurate measurements of compaction. On the right, the neutron source remains above the surface, and radiation is emitted into the ground and scattered back to the detector to provide a measurement of the moisture content.

A detector mounted opposite the source measures the radiation that passes through the material. A readout either on the gauge or on a connected computer terminal registers the required information; for example, the thickness of a product as it passes between the source and the detector, or the level of liquid in a bottle as it is being filled. The passage of radiation does not cause any detectable change in the material, and the material itself in no way becomes radioactive.

Fixed gauges are commonly used in all types of processing environments, from mills to breweries. In a paper mill, fixed gauges can measure the thickness of a sheet of paper as it leaves the presses. In a brewery, a fixed gauge makes sure that each bottle contains the right amount of beer. Whatever the application, these gauges ensure quality control in a process.

3.2 Portable Gauges

Portable gauges are used in industries such as agriculture, construction, and civil engineering to measure things like the moisture in soil, and the density of asphalt in a paving mix.

There are two basic methods of measuring material with portable gauges, backscatter and direct transmission.

Direct transmission is considered the more precise of the two, as it offers less error in measuring composition and compensates for surface roughness. To measure soil density, for example, the source is placed in a tube and inserted beneath the surface through a punched access hole. Radiation is then transmitted from the source to a detector on the base of the gauge. The density of the soil is determined by the radiation level at the detector.

The backscatter method eliminates the need for an access hole by allowing both the source and detector to remain on the surface. Radiation is directed beneath the surface, and some radiation is reflected, or scattered, back to the gauge detector by the

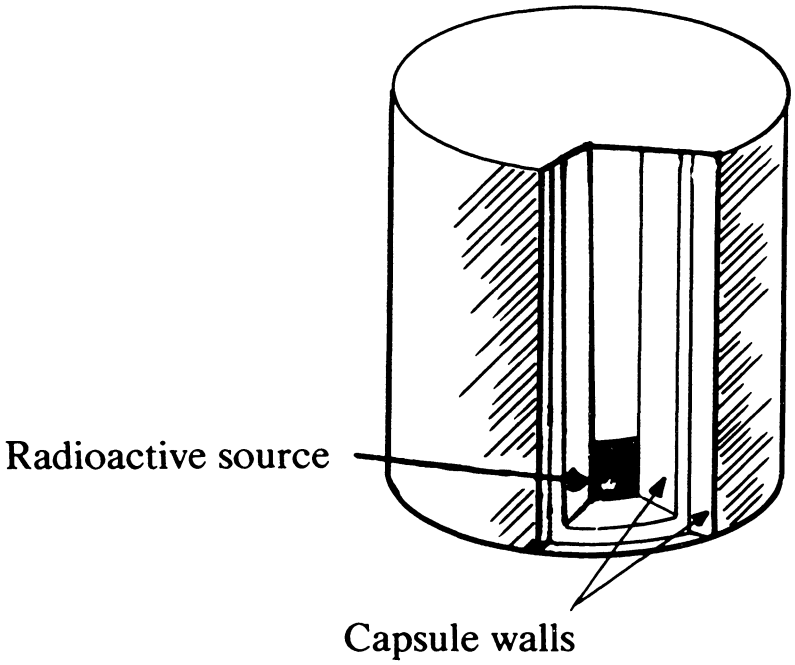

All nuclear gauges use a radioactive source that is placed in a special double capsule. This capsule, which can be as small as the eraser on the tip of a pencil or as large as the tube inside a roll of paper towels, is then inserted into the gauge's source housing, which shields the radiation emitted from the source.

surface material. This method can be less accurate than direct transmission, due to the large scattering angle and shallow depth of measurement. It is also insensitive to density variations beyond a depth of two to three inches. However, the backscatter method is quicker and easier than direct transmission, and is useful when measuring uniform material such as asphalt paving.

3.3 The Strength of the Source

Each nuclear gauge uses one or two small radioactive sources containing americium-241, cesium-137, americium-241/beryllium, krypton-85, radium-226, or cobalt-60. The source's strength is measured in terms of how much radioactive energy it gives off. Although these sources are physically quite small, they are often extremely powerful and highly radioactive. However, it is the amount of radiation you absorb, not the strength of the source or the amount of radiation it can emit, that can pose a danger to your health.

You are protected from receiving excess radiation by the source shielding, by proper handling techniques, and by the fact that the Agency performs a safety evaluation of all nuclear gauges in the United States to ensure that, under proper use, they will pose no radiation hazard. The following section outlines the many ways in which the possible hazards associated with nuclear gauges are minimized.

4. ARE NUCLEAR GAUGES SAFE?

Nuclear gauges are tools like a power saw or a welding torch that may be hazardous unless proper safety precautions are taken. But because the potential harm from radiation is not as obvious as the dangers from a sharp blade or a flame, the safety precautions are not as obvious either. By following a few simple rules, you can be assured that working with or around nuclear gauges will pose no threat to your health and safety.

Distance

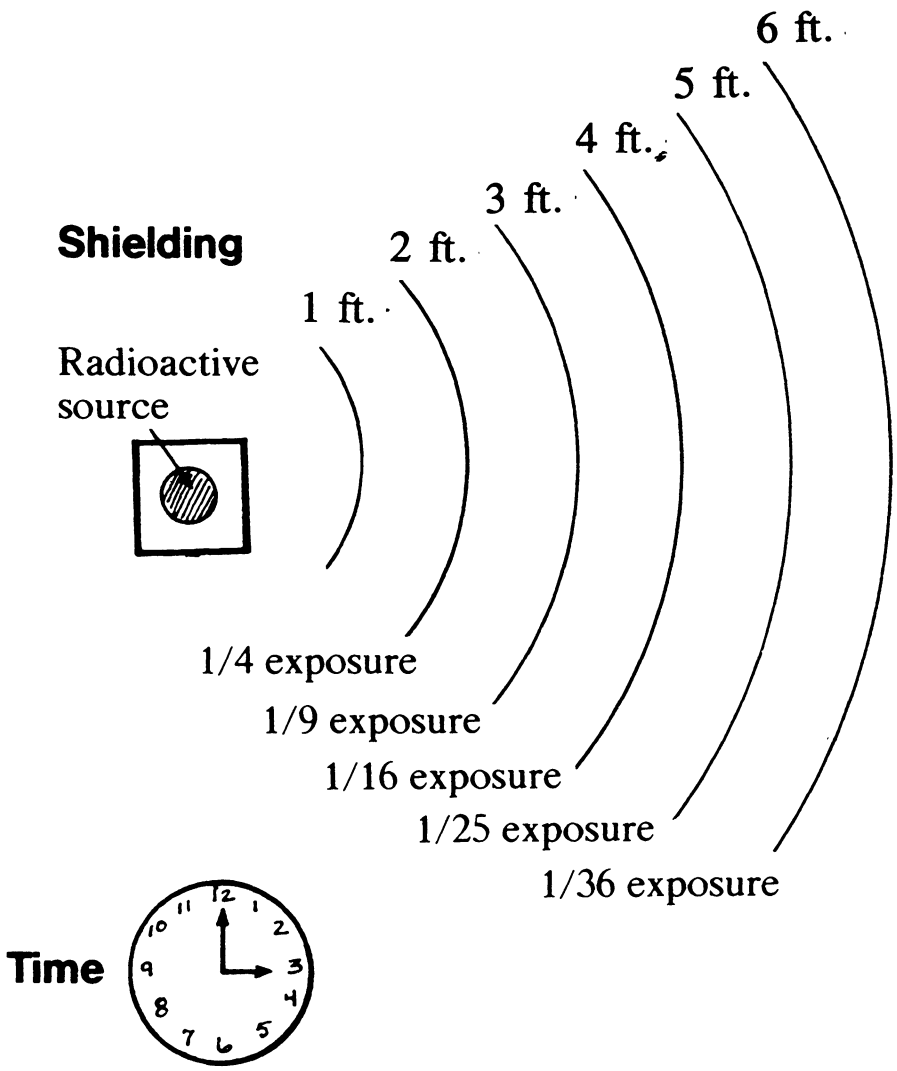

*The three elements of radiation protection are **time, distance,** and **shielding.** The less time you spend in the area of radiation, the less of a radiation dose you will receive. Likewise, the effects of radiation fall off sharply the further you move away from the radioactive source. Protective material placed between you and the source, like the shielding, also reduces the amount of radiation to which you will be exposed.*

4.1 Principles of Radiation Protection

Three factors come into play when protecting yourself from the effects of radiation: time, distance, and shielding.

- **Time:** the less time a person remains in the area of radiation, the less of a radiation dose that person will receive.

- **Distance:** the intensity of radiation and its effects fall off sharply as you move further away from the radioactive source. For example, by moving twice as far away from a radioactive source, you are exposed to one-quarter the amount of radiation; moving three times as far away means one-ninth the exposure, and so on.

- **Shielding:** protective material placed between you and the source reduces the level of radiation passing through, and thus the amount to which you will be exposed. In nuclear gauges, this protection is provided by the source housing.

4.2 Keeping Track of Your Radiation Dose

By following the time, distance, and shielding principles of radiation protection, you can minimize the amount of radiation you absorb. You can also monitor that radiation dose with special measuring devices.

Workers who use portable gauges, or those who come into regular contact with fixed gauges, can keep track of how much radiation they receive by using a personnel measuring device called a dosimeter. Due to the small amount of radiation that workers normally receive, these devices are not usually required, but they are available. The three most commonly used types of dosimeters are direct reading dosimeters (DRDs) and film badges or thermoluminescent dosimeters (TLDs). These devices are shown in the illustrations on page 16.

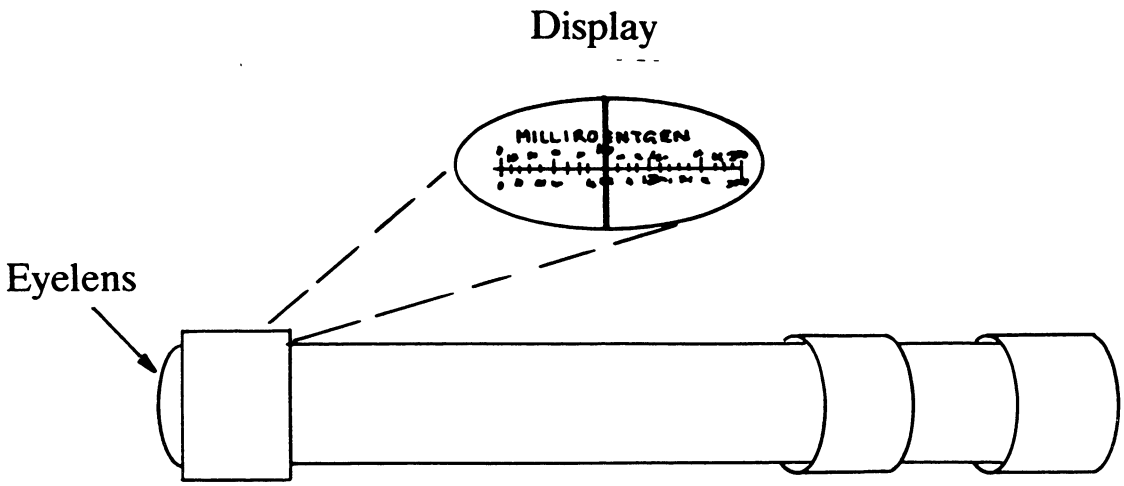

Direct reading dosimeter (DRD)

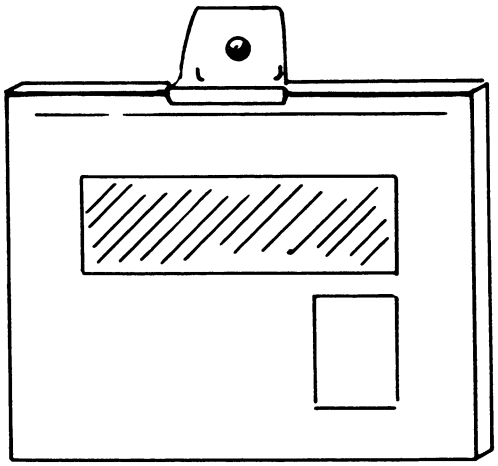

Thermoluminescent dosimeter (TLD)

These devices measure the amount of radiation you absorb. The DRD provides an immediate indication of your exposure, whereas the film or TLD badge measures your accumulated dosage. At a minimum, film badges should be exchanged at intervals not to exceed one month and TLDs at intervals not to exceed three months.

The DRD allows you periodically to check the amount of radiation you are receiving at any given moment. A quartz fiber within the dosimeter measures the radiation by moving along a scale and provides an indication of your exposure.

A film badge contains film that is darkened by radiation. The radiation dose can be determined by reading how dark the developed film is. TLD's contain small chips of material that absorb radiation in a measurable form. You are required to wear a film badge or a TLD if stated in the license, or if you must handle the source when servicing your gauge. These devices provide a permanent record of your exposure over a given period of time. Never leave any dosimeter behind when you are away from the gauge as it will continue to absorb radiation, making it impossible to tell how much radiation you have actually received.

4.3 Under the Limit

Although you have a responsibility to minimize the amount of radiation you absorb and, if required by the license, to monitor your radiation dose, the Agency also has a role to play in ensuring your safety. First, the Agency regulates the use of nuclear devices to ensure that you are not exposed to radiation unnecessarily. Second, the Agency regularly inspects licensees to ensure compliance with the regulations. Third, the Agency sets limits on the amount of radiation to which you may be exposed.

Although a certain amount of radiation is always present when nuclear devices are being used, people who work with or around nuclear gauges are limited to no more than 5 rem (5000 millirems) of radiation a calendar year.

In practice, you would likely be exposed to much less radiation than 5 rem per calendar year. The average annual measurable

exposure of gauge users is about 100 millirems, which is well within the acceptable safety levels set by the Agency.

4.4 Registration, Licensing, Inspection, and Testing

The operation of the gauges you use, or are exposed to, must comply with Agency regulations. All gauges must be registered with the Agency and approved for use before being put into operation. Once a gauge is approved, the Agency issues a license to the company who will be using it.

Once a gauge is in place and being used, tests must be performed regularly to ensure that the radioactive source is secure within its capsule and is not leaking out (called a leak test). Your company or organization must arrange for an approved organization to perform these leak tests within the required interval. If the source is not leaking, your company will receive a document to that effect. Note that a small amount of radiation always penetrates the gauge housing and can be detected in a radiation survey even if the source capsule is intact. This low level radiation poses no measurable health risk. The Agency will normally conduct a compliance inspection once every two years to see if the tests have been performed on schedule, and to ensure that other license conditions and Agency regulations are being followed.

Of course, in order to ensure complete safety with nuclear gauges, you must, as with any type of equipment, follow the operating rules. The following section provides guidelines on the proper handling and maintenance of nuclear gauges.

5. PROPER USE OF NUCLEAR GAUGES

Working with and around nuclear gauges is no different than working with any other type of industrial equipment. Certain rules must be adhered to and procedures followed to ensure safe use. Always carefully follow the operating procedures provided

by the manufacturer. However, if the manufacturer's instructions differ from the Agency's, comply with Agency regulations.

The following is a set of general guidelines on using, servicing, storing and transporting fixed and portable nuclear gauges.

Guidelines	Gauges Fixed	Gauges Portable
Before You Start		
Never use or manipulate a gauge without proper training, knowledge of the instruction manual, and authorization.	●	●
Read the conditions of the license.	●	●
Post a copy of the license in a common area where all workers can see it.	●	●
Keep a copy of the license in the gauge storage case.		●

Guidelines	Gauges Fixed	Gauges Portable
Ensure that radiation warning signs are prominently posted in any area where nuclear gauges are being used.	●	
Advise other workers that a portable nuclear gauge is being used.		●
Make sure that the gauge is clearly and durably labelled with the radiation warning symbol, and with the name and telephone number of the person to contact in case of problems.	●	●
Maintenance and Service		
Only the supplier of the gauge, or a person authorized by the Agency, should attempt to repair the source, source holder, or shutter.	●	●
Always lock the shutter in the "off" position until maintenance is completed.	●	●
Only remove the source rod for servicing if the Agency has given authorization in the license.		●
Avoid any physical contact with, or direct exposure to the source when performing any maintenance.	●	●
Clean the gauge once or twice a week to prevent dirt from getting near the shutter.	●	

Guidelines	Gauges Fixed	Gauges Portable
If necessary when using a nuclear gauge in the field, clean the area around the shutter throughout the day.		●
Make sure the gauge is leak-tested every six months, or as specified by the manufacturer's instructions, but not exceeding intervals of three years.	●	●
Storage		
Before storing the gauge, make sure the source is in the "safe" position.	●	●
Lock the source and shutter in place.	●	●
Never modify or change the source holder, shielding or safety interlocks without Agency approval.	●	●
Store the gauge in a locked container or area.	●	●
Identify the container in case the gauge is lost, damaged, or misplaced.	●	●
Lock the area where the gauge is being stored.	●	●
Post a radiation warning sign outside the storage area.	●	●

Guidelines	Gauges Fixed	Gauges Portable
Transportation and Disposal		
When sending gauges anywhere, make proper arrangements for receipt of the package at the other end.	●	●
When taking a gauge to and from a job site, place it in its storage container and keep it in an unoccupied part of the vehicle, such as the locked trunk or secure it to an integral part of the vehicle.		●
Lock the vehicle if the gauge is in it.		●
When sending a gauge to the supplier, package it according to the Federal regulations on the transport and packaging of radioactive materials. Label the package to indicate its contents and affix a radiation warning label. (Further information on packaging can be obtained by contacting the Agency and the U.S. Department of Transportation.)	●	●
For disposal, return gauges to the supplier or to a waste disposal organization approved by the Agency.	●	●

6. EMERGENCY PROCEDURES

Your company or organization must have a set of emergency procedures and a plan of action in case of an accident or in the event of damage to the gauge. If you are uncertain about what to do should a malfunction, accident or damage occur, take the following steps:

- Cease work immediately.
- If the gauge has been partially damaged or destroyed, keep people at least 20 feet away until the source is replaced or shielded, or until radiation levels are known.
- Have leak tests performed after any incident that may result in source damage.
- In case of an accident or fire, do not use the gauge until any danger from or damage to the source is assessed.
- Inform the Agency within 24 hours of any theft, accident or incident involving the gauge.

Nuclear gauges present no major health dangers if basic precautions are taken and common sense used. By following proper procedures and the principles of radiation protection, and by helping others do likewise, you can feel comfortable and assured that your workplace is a safe one.

7. TRANSPORTATION

Safety in the transportation of radioactive materials depends on proper packaging and on the efficient manner in which the packages are handled, stored and transported. Nuclear gauges are typically transported in Type "A" packages.

Type "A" packages normally contain relatively small quantities of radioactive materials, and therefore are required to withstand only the normal rigors of transportation. To be in compliance with the regulations, such packages must be able to withstand drop, penetration, compression and vibration tests, as well as exposure to extreme climatic conditions that are encountered in normal transportation. Each shipper is required to maintain on file the results of the package testing.

Licensees who transport gauges to and from temporary job sites in licensee or private vehicles are shippers acting as private carriers and, as such, must comply with DOT regulations governing both shippers and carriers (49 CFR 170-178).

Listed below are common violations which are typical of a licensee who acts as both a user and a shipper/carrier of radioactive materials.

- Shipping papers must be carried in the vehicle. Such papers must contain certain information and be stored within easy reach of the driver of the vehicle.

- The shipper must label and mark each package (case) used for transporting the gauge.

- Each shipper must maintain on file the results of tests conducted on the transport package and the sealed sources contained in the gauges.

- The package (gauge by itself or within a case) must be blocked and braced to prevent movement of the package within the vehicle.

GLOSSARY OF TERMS

Agreement State: a State that has signed an agreement with the U.S. Nuclear Regulatory Commission, allowing the State to regulate the use of radioactive materials.

U.S. Nuclear Regulatory Commission: the regulatory body responsible for ensuring the safety and security of nuclear products and facilities.

Background radiation: naturally-occurring radiation to which we are exposed all the time.

Compliance inspection: an inspection performed by the Agency to ensure that leak tests have been performed and that license conditions are being followed.

Dose: the radiation absorbed by the body.

Dosimeter: a personal measuring device used to monitor the amount of radiation absorbed.

Ionizing radiation: the result of the breakdown, or decay, of an atom's structure.

Leak tests: tests performed on nuclear gauges to ensure that the source capsule is intact. Typical intervals are at 6 months and at 3 years.

Man-made radiation: the radioactive substances, or sources of radiation, created by man, e.g., a medical X-ray.

Radioisotope: a radioactive element or form of element, either man-made or naturally-occurring.

Rem: the traditional unit for measuring a radiation dose. One rem equals 0.01 sievert.

Sealed source: a radioactive element that is encased in a protective capsule and is used in equipment such as a fixed or portable nuclear gauge.

UNITED STATES
NUCLEAR REGULATORY COMMISSION
WASHINGTON, D.C. 20555-0001

OFFICIAL BUSINESS
PENALTY FOR PRIVATE USE, $300

FIRST CLASS MAIL
POSTAGE & FEES PAID
USNRC

PERMIT No. G-67