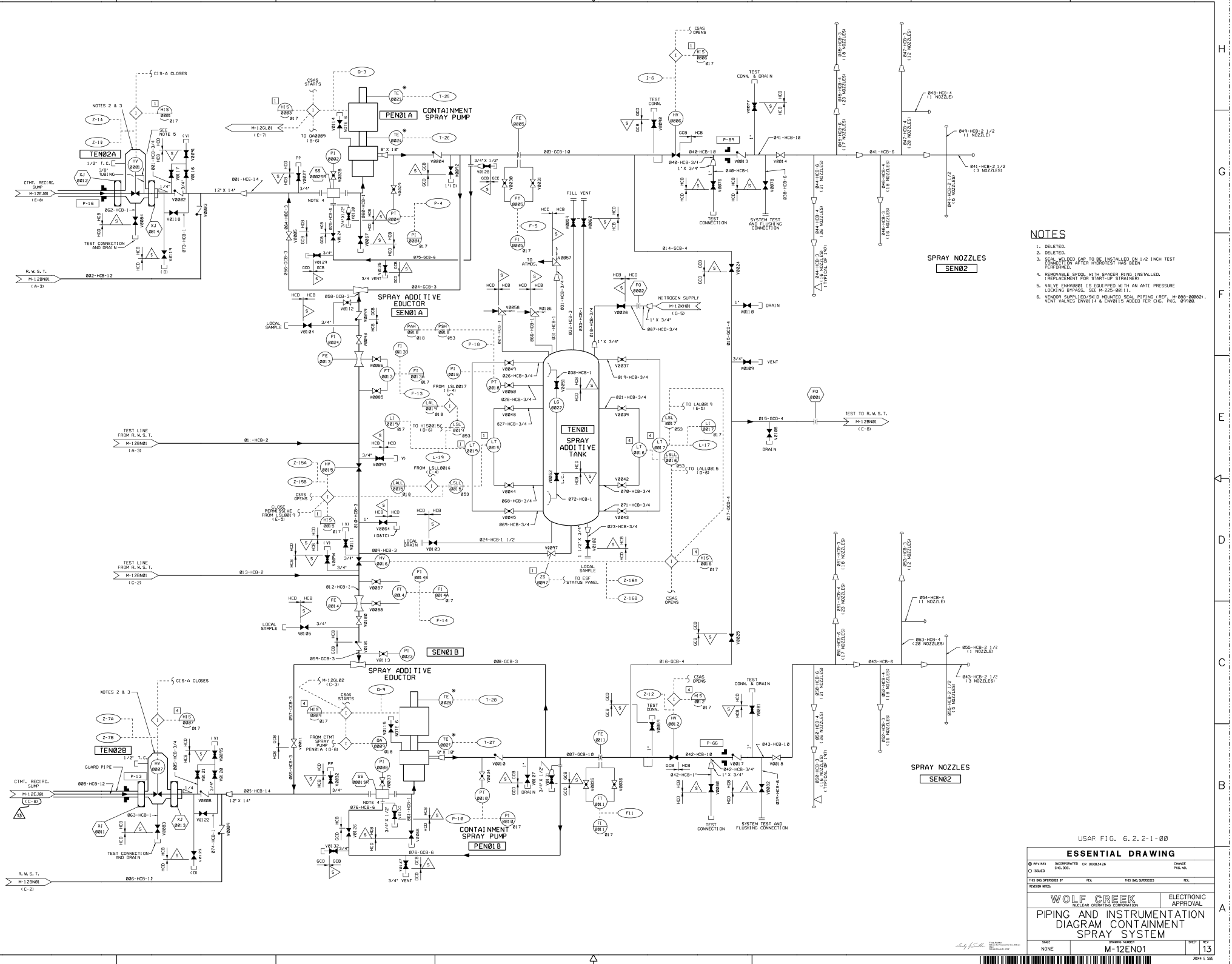

NOTES

1. DELETED.
2. DELETED.
3. SEAL WELDED CAP TO BE INSTALLED ON 1/2 INCH TEST CONNECTION AFTER HYDROTEST HAS BEEN PERFORMED.
4. REMOVABLE SPOOL WITH SPACER RING INSTALLED. (REPLACEMENT FOR START-UP STRAINER)
5. VALVE ENHV0001 IS EQUIPPED WITH AN ANTI PRESSURE LOCKING BYPASS. SEE M-225-00111.
6. VENDOR SUPPLIED/SKID MOUNTED SEAL PIPING (REF. M-008-00002). VENT VALVES ENV0114 & ENV0115 ADDED PER CHG. PKG. 09920A

USAR FIG. 6.2.2-1-00

ESSENTIAL DRAWING

◉ REVISED ○ ISSUED	INCORPORATED CHG. DOC.	CR 00013426	CHANGE PKG. NO.
THIS DWG. SUPERSEDES BY	REV.	THIS DWG. SUPERSEDES	REV.
REVISION NOTES:			

WOLF CREEK NUCLEAR OPERATING CORPORATION

ELECTRONIC APPROVAL

PIPING AND INSTRUMENTATION DIAGRAM CONTAINMENT SPRAY SYSTEM

SCALE	DRAWING NUMBER	SHEET	REV
NONE	M-12EN01		13

M-12EN01-1-13

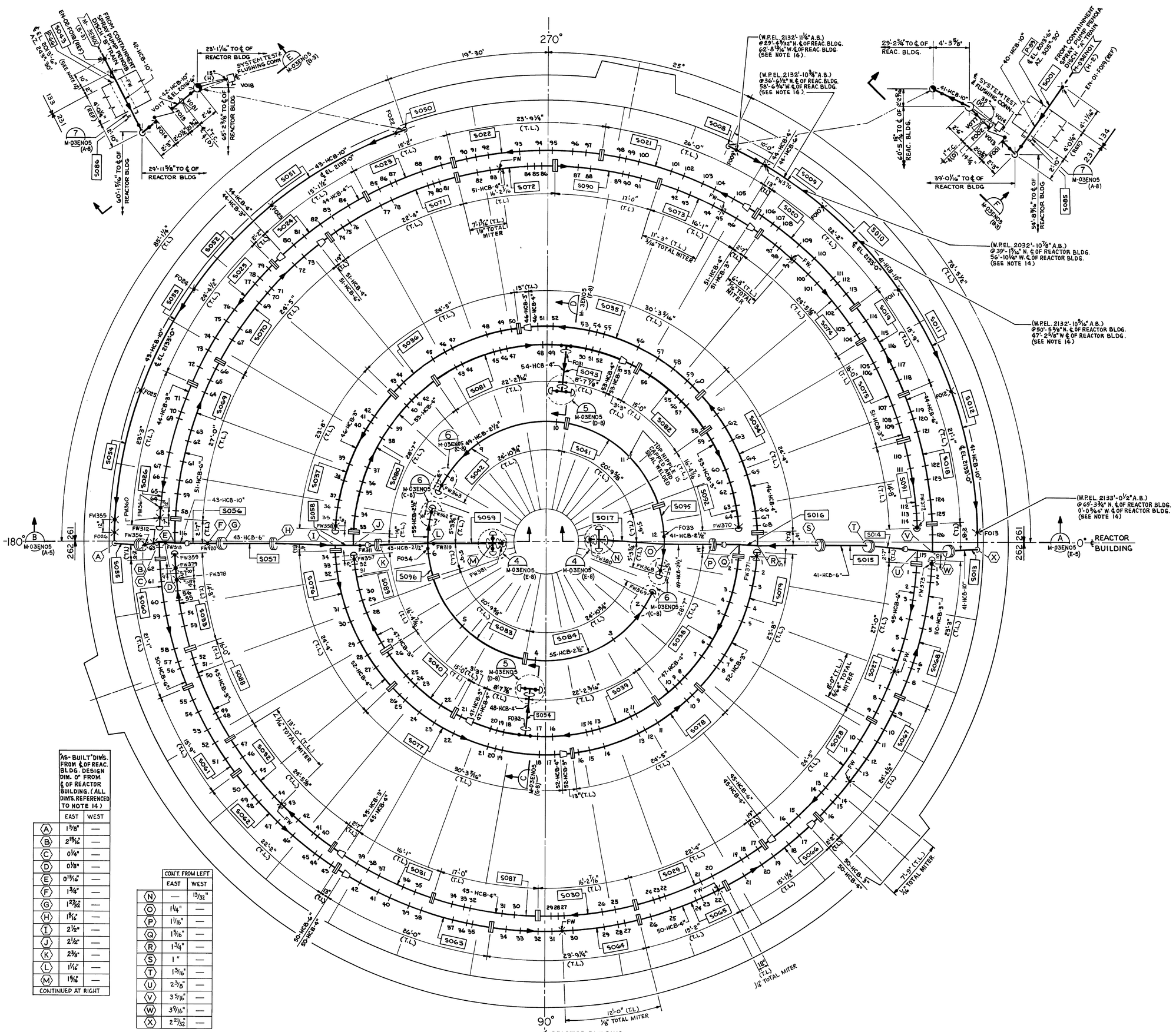

NOTES:

1. FOR GENERAL NOTES AND REFERENCES SEE DRAWING M-03EN01.
2. FOR VALVE LIST SEE DRAWING M-03EN05.
3. ALL PIPE TERMINATIONS SHALL BE PIPE CAP OF THE SAME NOMINAL PIPE SIZE.
4. SPRAY NOZZLE, SEN102, TO BE SPRAYING SYSTEMS CO. NOZZLE NO. 15215-1C304SS6.3.
5. TEMPERATURE
   A) INJECTION - 100°F.
   B) RECIRCULATION - 270°F
6. WORK THIS DRAWING WITH DRAWINGS M-03EN01 M-03EN02, M-13EN04, & M-03EN05.
7. FOR REACTOR BLDG. PENETRATION DETAILS, REFER TO CIVIL DRAWINGS C-OL2903 AND C-OL2904.
8. ALL FLANGES ON M-03EN03 & M-13EN04 WILL BE 150# RAISED FACE SLIP ON.
9. ALL SPOOLS AND FIELD WELDS ON DRAWINGS M-03EN03 & M-03EN05 ARE SEQUENTIALLY NUMBERED AND WILL CARRY M-03EN03 AS THEIR PREFIX.
10. WHERE FIELD WELD LOCATIONS ARE NOT DIMENSIONED, USE RANDOM 20 FT. LENGTHS TO MAINTAIN OVERALL DIMENSIONS.
11. DELETED 2
12. SCH. 80 PUP PIECE COUNTER BORED AT ENDS TO SCH. 80S.
13. FOR AS BUILT ELEVATIONS AND RADII OF CONTAINMENT SPRAY RINGS, SEE DWG. M-13EN04(Q).
14. ELEVATIONS, DIMENSIONS & LOCATING DIMENSIONS REFERENCED TO THIS NOTE REFLECT THE "AS-BUILT" (A.B.) CONDITION. ASSOCIATED DIMENSIONS THAT ARE WITHIN ALLOWABLE TOLERANCES HAVE NOT BEEN ADJUSTED.

REV. NO.	ELEC.	CONT. EQ.	MECH.	CIVIL	PIPING	PIPE SUPP.	ARCH.
2	N/R	N/R	N/R	N/R	CAD		N/R
1	N/R	N/R	N/R	N/R			N/R
0	N/R	N/R	N/R	N/R			N/R

COORDINATION SIGN-OFF

DOCUMENT IDENTIFICATION M-13EN03 (Q)

AS-BUILT DIMS. FROM ℄ OF REAC. BLDG. DESIGN DIM. 0" FROM ℄ OF REACTOR BUILDING. (ALL DIMS. REFERENCED TO NOTE 14)		
	EAST	WEST
A	1 3/8"	—
B	2 15/16"	—
C	0¼"	—
D	0⅛"	—
E	0 13/16"	—
F	1¾"	—
G	1 23/32"	—
H	1 9/16"	—
I	2½"	—
J	2½"	—
K	2⅜"	—
L	1 1/16"	—
M	1 9/16"	—
CONTINUED AT RIGHT		

	CON'T. FROM LEFT	
	EAST	WEST
N	—	13/32"
O	1¼"	—
P	1 1/16"	—
Q	1 5/16"	—
R	1¾"	—
S	1"	—
T	1 3/16"	—
U	2⅜"	—
V	3 5/16"	—
W	3 9/16"	—
X	2 21/32"	—

GUIDE	RESTRAINT	
SPRING HANGER	RIGID HANGER	ANCHOR
DIRECTION OF RESTRAINT	DIRECTION OF EXPANSION	SNUBBER

3 USAR FIG. 6.2.2-2-01

ESSENTIAL DRAWING

REVISED / ISSUED — INCORPORATED CHG. DOC. — CHANGE PKG. NO.

THIS DWG. SUPERSEDED BY — REV. — THIS DWG. SUPERSEDES — REV.

REVISION NOTES: REF. CR 2007-000952

WOLF CREEK NUCLEAR OPERATING CORPORATION — ELECTRONIC APPROVAL

PIPING ORTHOGRAPHIC
CONTAINMENT SPRAY SYSTEM
REACTOR BUILDING "A" & "B" TRAINS

SCALE	DRAWING NUMBER	SHEET	REV
NONE	M-13EN03		03

34X44 E SIZE

Released by Document Services Release Date: 08/31/07

THIS DRAWING AND THE DESIGN IT COVERS IS THE PROPERTY OF THE UTILITIES WHICH ARE PARTICIPATING IN THE SNUPPS PROJECT. IT IS LOANED ON THE BORROWER'S EXPRESS AGREEMENT THAT IT WILL NOT BE REPRODUCED, COPIED, LOANED, EXHIBITED, OR USED EXCEPT IN THE LIMITED WAY AND PRIVATE USE PERMITTED BY WRITTEN CONSENT GIVEN BY THE SNUPPS UTILITIES TO THE BORROWER.

TABLE FOR PIPE NOZZLES

SEQ. NO.	DET. NO.	POS. ON PIPE	PIPE SIZE	AZ.	℄ EL.	SEE NOTE 4	
50-HCB-3" LOCATION-262 5TH RING							
1	1	"B"	3"	4°-27'	EL.2165'-8"	- 14°	
2		"A"		5°-27'		+ 16°	
3		"C"		6°-26'		- 59°	
4		"B"		11°-25'		- 14°	
5		"A"		13°-23'		+ 19°	
6		"C"		18°-22'		- 58°	
7		"B"		19°-22'		- 11°	
8		"A"		21°-22'		+ 17°	
9		"B"		26°-21'		- 16°	
10		"A"		29°-18'		+ 15°	
11		"C"		31°-17'		- 61°	
12		"B"		34°-16'		- 17°	
13		"A"		36°-15'		+ 15°	
14		"B"		41°-15'		- 19°	
15		"C"		42°-15'		- 63°	
16		"A"	3"	44°-14'		+ 11°	
50-HCB-4" LOCATION-262 5TH RING							
17		"B"	4"	49°-10'		- 17°	
18		"A"		51°-10'		+ 14°	
19		"C"		54°-10'		- 62°	
20		"B"		55°-8		- 16°	
21		"A"		59°-9'		+ 15°	
22		"B"		64°-10'		- 15°	
23		"A"		66°-10'		+ 13°	
24		"C"		67°-10'		- 60°	
25		"B"		71°-10'		- 16°	
26		"A"		74°-11'		+ 14°	
27		"C"		78°-10'		- 60°	
28		"B"		79°-10'		- 16°	
29		"A"		81°-10'		+ 15°	
30		"B"		86°-10'		- 15°	
31		"A"		89°-10'		+ 16°	
32		"C"		91°-10'		- 57°	
33		"B"		94°-11'		- 13°	
34		"A"		96°-11'		+ 17°	
35		"B"		101°-11'		- 14°	
36		"C"		102°-11'		- 58°	
37		"A"		104°-11'		+ 17°	
38		"B"		109°-10'		- 14°	
39		"A"		111°-10'		- 16°	
40		"C"		114°-8'		- 58°	
41		"B"		116°-7'		- 13°	
42		"A"	4"	119°-7'		+ 16°	
43		"B"	6"	124°		- 16°	
44		"A"		126°		+ 14°	
45		"C"		127°		- 61°	
46		"B"		131°		- 15°	
47		"A"		134°		+ 15°	
48		"B"		138°		- 15°	
49		"C"		139°		- 60°	
50		"A"		141°		+ 14°	
51		"B"		145°-55'		- 16°	
52		"A"		148°-55'		+ 13°	
53		"C"		150°-55'		- 60°	
54		"B"		153°-54'		- 15°	
55		"A"		155°-54'		+ 15°	
56		"B"		160°-55'		- 17°	
57		"C"		162°		- 61°	
58		"A"		164°		+ 13°	
59		"B"		169°		- 15°	
60		"A"		171°		+ 14°	
61		"C"		174°		- 61°	
62		"B"		176°		- 16°	
63	1	"A"	6"	179°	EL. 2165'-8"	+ 20°	
44-HCB-3" LOCATION-261 5TH RING							
64	1	"B"	3"	184°-36'	EL. 2165'-8"	- 15°	
65		"A"		185°-36'		+ 12°	
66		"C"		186°-37'		- 58°	
67		"B"		191°-36'		- 13°	
68		"A"		193°-35'		+ 15°	
69		"C"		198°-34'		- 58°	
70		"B"		199°-34'		- 15°	
71		"A"		201°-34'		+ 16°	
72		"B"		206°-37'		- 14°	
73		"A"		209°-31'		+ 16°	
74		"C"		211°-30'		- 60°	
75		"B"		214°-29'		- 14°	
76		"A"		216°-29'		+ 15°	
77		"B"		221°-27'		- 16°	
78		"C"		222°-26'		- 60°	
79		"A"	3"	224°-26'		+ 16°	
80		"B"	4"	229°-25'		- 13°	
81		"A"		231°-24'		+ 17°	
82		"C"		234°-24'		- 58°	
83		"B"		236°-23'		- 10°	
84		"A"		238°-38'		+ 12°	
85		"B"		244°-22'		- 14°	
86		"A"		246°-22'		+ 16°	
87		"C"		247°-21'		- 60°	
88		"B"		251°-20'		- 14°	
89		"A"		254°-19'		+ 15°	
90		"C"		258°-16'		- 60°	
91		"B"		259°-16'		- 14°	
92		"A"		261°-16'		+ 15°	
93		"B"		266°-14'		- 14°	
94		"A"		269°-14'		+ 17°	
95		"C"		271°-13'		- 59°	
96		"B"		274°-12'		- 14°	
97		"A"		276°-13'		+ 16°	
98		"B"		281°-12'		- 12°	
99		"C"		282°-12'		- 57°	
100		"A"		284°-13'		+ 19°	
101		"B"		289°-13'		- 13°	
102		"A"		291°-13'		+ 18°	
103		"C"		296°-15'		- 58°	
104		"B"		299°-16'		- 12°	
105		"A"	4"	299°-16'		+ 19°	
106		"B"	6"	304°-11'		- 16°	
107		"A"		306°-12'		+ 12°	
108		"C"		307°-12'		- 61°	
109		"B"		311°-11'		- 15°	
110		"A"		314°-11'		+ 12°	
111		"B"		318°-10'		- 16°	
112		"C"		319°-11'		- 60°	
113		"A"		321°-11'		+ 13°	
114		"B"		326°-9'		- 16°	
115		"A"		329°-9'		+ 14°	
116		"C"		331°-8'		- 60°	
117		"B"		334°-10'		- 17°	
118		"A"		336°-9'		+ 13°	
119		"B"		341°-8'		- 15°	
120		"C"		342°-8'		- 60°	
121		"A"		344°-9'		+ 15°	
122		"B"		349°-8'		- 15°	
123		"A"		351°-9'		+ 15°	
124		"C"		354°-10'		- 59°	
125		"B"		356°-9'		- 15°	
126	1	"A"	6"	359°-12'	EL 2165'-8"	+ 18°	

SEQ. NO.	DET. NO.	POS. ON PIPE	PIPE SIZE	AZ.	℄ EL.	SEE NOTE 4	
45-HCB-6" LOCATION-262 4TH RING							
1	1	"C"	6"	4°-30'	EL. 2170'-3"	- 60°	
2	1	"H"		7°		- 30°	
3	2	"E"		9°		+ 10°	
4	2	"C"		12°		- 60°	
5	3	"H"		15°		- 29°	
6	2	"E"		17°		+ 9°	
7	3	"H"		23°		- 27°	
8	2	"E"		25°		+ 11°	
9	1	"C"		27°		- 58°	
10	3	"H"		32°-11'		- 27°	
11	2	"E"		34°-12'		+ 9°	
12	3	"H"		39°-11'		- 29°	
13	2	"E"		41°-20'		+ 9°	
14	1	"C"		42°-14'		- 59°	
15	3	"H"		47°-13'		- 28°	
16	2	"E"	6"	49°-13'		+ 10°	
17	3	"H"	4"	55°-9'		- 29°	
18	2	"E"		57°-9'		+ 8°	
19	1	"C"		58°9'		- 59°	
20	3	"H"		63°-9'		- 26°	
21	2	"E"		65°-9'		+ 8°	
22	3	"H"		71°-9'		- 27°	
23	1	"C"		72°-9'		- 59°	
24	2	"E"		73°-10'		+ 9°	
25	3	"H"		79°-9'		- 29°	
26	2	"E"		81°-9'		+ 10°	
27	3	"H"		87°-11'		- 26°	
28	1	"C"		88°-11'		- 60°	
29	2	"E"		89°-11'		+ 8°	
30	3	"H"		95°-11'		- 26°	
31	2	"E"		97°-11'		+ 10°	
32	1	"C"		102°10'		- 58°	
33	3	"H"		103°-10'		- 28°	
34	2	"E"		105°-10'		+ 8°	
35	3	"H"		111°-7'		- 27°	
36	2	"E"		113°-6'		+ 11°	
37	1	"C"		117°-4'		- 55°	
38	3	"H"		119°		- 29°	
39	2	"E"	4"	121°		+ 9°	
40	3	"H"	3"	128°		- 26°	
41	2	"E"		129°		+ 10°	
42	1	"C"		131°-46'		- 57°	
43	3	"H"		134°-53'		- 27°	
44	2	"E"		136°-54'		+ 12°	
45	3	"H"		142°-50'		- 27°	
46	2	"E"		144°-49'		+ 10°	
47	1	"C"		146°-49'		- 55°	
48	3	"H"		151°-46'		- 26°	
49	2	"E"		152°-45'		+ 10°	
50	3	"H"		158°-42'		- 28°	
51	2	"E"		160°-42'		+ 10°	
52	1	"C"		161°-43'		- 57°	
53	3	"H"		166°-43'		- 27°	
54	2	"E"		168°-43'		+ 10°	
55	3	"H"		174°-44'		- 28°	
56	1	"C"		175°-46'		- 57°	
57	2	"E"	3"	176°-26'	EL 2170'-3"	+ 10°	
58	1	"C"	6"	180°-30'	EL. 2170'-3"	- 60°	
59	3	"H"		187°		- 29°	
60	2	"E"		189°		+ 7°	
61	1	"C"		192°		- 58°	
62	3	"H"		195°		- 30°	
63	2	"E"		197°		+ 7°	
64	3	"H"		203°		- 30°	
65	2	"E"		205°		+ 6°	
66	1	"C"		207°		- 60°	
67	3	"H"		212°8'		- 28°	
68	2	"E"		214°8'		+ 8°	
69	3	"H"		219°-7'		- 28°	
70	2	"E"		221°-7'		+ 6°	
71	1	"C"		222°-8'		- 59°	
72	3	"H"		227°-7'		- 28°	
73	2	"E"	6"	229°58'		+ 8°	
74	3	"H"	4"	235°-8'		- 29°	
75	2	"E"		237°-7'		+ 8°	
76	1	"C"		238°-7'		- 60°	
77	3	"H"		243°-7'		- 30°	
78	2	"E"		245°-8'		+ 7°	
79	3	"H"		251°-7'		- 30°	
80	1	"C"		252°-7'		- 60°	
81	2	"E"		253°-7'		+ 7°	
82	3	"H"		259°-5'		- 30°	
83	2	"E"		261°5'		+ 10°	
84	3	"H"		267°		- 30°	
85	1	"C"		268°		- 60°	
86	2	"E"		269°		+ 8°	
87	3	"H"		275°		- 30°	
88	2	"E"		277°		+ 6°	
89	1	"C"		282°		- 63°	
90	3	"H"		283°		- 30°	
91	2	"E"		285°		+ 7°	
92	3	"H"		291°		- 31°	
93	2	"E"		293°5'		+ 7°	
94	1	"C"		297°-5'		- 62°	
95	3	"H"		299°-6'		- 32°	
96	2	"E"	4"	301°-7'		+ 6°	
97	3	"H"	3"	308°		- 32°	
98	2	"E"		309°		+ 7°	
99	1	"C"		312°-5"		- 65°	
100	3	"H"		315°		- 32°	
101	2	"E"		317°		+ 6°	
102	3	"H"		323°		- 33°	
103	2	"E"		325°		+ 5°	
104	1	"C"		327°		- 60°	
105	3	"H"		332°		- 32°	
106	2	"E"		333°		+ 6°	
107	3	"H"		339°		- 30°	
108	2	"E"		341°		+ 8°	
109	1	"C"		342°		- 61°	
110	3	"H"		347°		- 33°	
111	2	"E"		349°		+ 4°	
112	3	"H"		354°-55'		- 32°	
113	1	"C"		355°-55'		- 62°	
114	2	"E"	3"	356°-55'	EL. 2170'-3"	+ 3°	
1	1	"D"	3"	6°	EL. 2195'-3"	-33°30'	
2	2	"F"		8°		- 38°	
3	1	"C"		12°		- 57°	
4	1	"D"		18°		- 5°	
5	2	"F"		22°		- 38°	
6	1	"D"		32°		- 5°	
7	1	"C"		34°		- 56°	
8	2	"F"		36°		-35°30'	
9	1	"D"		46°		-4°30'	
10	2	"F"		48°		-39°30'	
11	1	"C"		58°		-57°30'	
12	1	"D"		62°		+ 2°	
13	2	"F"		64°		-50°	
14	1	"D"		74°		- 2°	
15	2	"F"		78°		-38°30'	
16	1	"C"	3"	82°	EL. 2195'-3"	- 57°	

SEQ. NO.	DET. NO.	POS. ON PIPE	PIPE SIZE	AZ.	℄ EL.	SEE NOTE 4	
52-HCB-4" LOCATION-262 3RD RING							
17	1	"D"	4"	88°	EL 2195'-3"	-05°30'	
18	2	"F"		92°		-36°30'	
19	1	"D"		101°-51'		- 1°	
20	1	"C"		104°		- 56°	
21	2	"F"		106°		-37°30'	
22	1	"D"		110°		- 1°	
23	2	"F"		121°-49'		- 37°	
24	1	"C"		126°-48'		-56°30'	
25	1	"D"		131°47'		- 1°	
26	2	"F"		133°-48'		-37°30'	
27	1	"D"		143°-49'		-3°30'	
28	2	"F"		147°-49'		- 38°	
29	1	"C"		151°-48'		- 59°	
30	1	"D"		157°47'		-2°30'	
31	2	"F"		161°-46'		- 40°	
32	1	"D"		171°-45'		- 3°	
33	2	"F"		173°45'		-38°30'	
34	1	"C"	4"	175°-44'	EL 2195'-3"	-58°30'	
35	1	"D"	3"	185°13'	EL 2195'-3"	+ 5°	
36	2	"F"		187°20'		- 36°	
37	1	"C"		191°21'		- 56°	
38	1	"D"		197°23'		- 4°	
39	2	"F"		201°23'		-37°30'	
40	1	"D"		211°25'		- 5°	
41	1	"C"		213°-26'		-56°30'	
42	2	"F"		215°-26'		- 36°	
43	1	"D"		225°29'		- 3°	
44	2	"F"		227°29'		-38°30'	
45	1	"C"		237°35'		- 58°	
46	1	"D"		241°36'		- 4°	
47	2	"F"		243°38'		-38°30'	
48	1	"D"		253°43'		- 4°	
49	2	"F"		257°45'		-37°30'	
50	1	"C"	3"	261°45'		-59°30'	
51	1	"D"	4"	267°46'		-3°30'	
52	2	"F"		271°46'		- 38°	
53	1	"D"		281°48'		- 3°	
54	1	"C"		283°48'		-57°30'	
55	2	"F"		285°-49'		- 38°	
56	1	"D"		295°51'		- 4°	
57	2	"F"		301°-50'		-38°	
58	1	"C"		307°		- 59°	
59	1	"D"		312°		- 3°	
60	2	"F"		314°		- 39°	
61	1	"D"		324°		- 4°	
62	2	"F"		328°		- 38°	
63	1	"C"		332°		-59°30'	
64	1	"D"		338°		- 3°	
65	2	"F"		342°-10'		- 38°	
66	1	"D"		352°-11'		-2°30'	
67	2	"F"		354°-12'		-37°30'	
68	1	"C"	4"	356°-12'	EL 2195'-3"	- 58°	
1	2	"F"	4"	4°-10'	EL. 2196'-10"	- 37°	
2	1	"D"		8°-12'		-2°30'	
3	1	"C"		15°-7'		- 59°	
4	2	"F"		18°-10'		- 39°	
5	1	"D"		22°-8'		-3°30'	
6	2	"F"		32°-10'		- 39°	
7	1	"D"		36°-10'		- 2°	
8	1	"C"		44°-11'		-59-30'	
9	2	"F"		46°-11'		-37°30'	
10	1	"D"		48°14'		- 4°	
11	2	"F"		62°-11'		- 40°	
12	1	"D"		64°-12'		- 1°	
13	2	"F"		74°-13'		- 40°	
14	1	"C"		76°-13'		-59°30'	
15	1	"D"		78°-16'		- 1°	
16	2	"F"		88°-18'		-38°30'	
17	1	"D"		92°19'		-1°30'	
18	2	"F"		102°-29'		-39°30'	
19	1	"C"		104°-31'		-60°30'	
20	1	"D"	4"	106°-31'		- 0°30'	
21	2	"F"	3"	116°-26'		- 40°	
22	1	"D"		122°-29'		-2°30'	
23	2	"F"		132°-29'		- 38°	
24	1	"D"		134°-27'		- 3°	
25	1	"C"		136°-28'		- 57°	
26	2	"F"		144°-24'		- 38°	
27	1	"D"		148°-28'		- 4°	
28	2	"F"		158°-27'		-36°30'	
29	1	"D"		162°-28'		- 4°	
30	1	"C"		165°-28'		- 56°	
31	2	"F"		172°-31'		- 36°	
32	1	"D"	3"	174°-33'	EL. 2196'-10"	- 6°	
33	2	"F"	4"	183°-37'	EL 2196'-10"	- 39°	
34	1	"D"		187°39'		- 3°	
35	1	"C"		194°-34'		-57°30'	
36	2	"F"		197°41'		- 40°	
37	1	"D"		202°-9'		-1°30'	
38	2	"F"		211°-36'		-38°30'	
39	1	"D"		215°37'		-2°30'	
40	1	"C"		223°44'		- 59°	
41	2	"F"		225°43'		- 41°	
42	1	"D"		227°44'		-3°30'	
43	2	"F"		242°		- 41°	
44	1	"D"		244°		+1°30'	
45	2	"F"		254°10'		-43°30'	
46	1	"C"		256°12'		- 63°	
47	1	"D"		258°13'		+1°30'	
48	2	"F"		268°26'		- 42°	
49	1	"D"		272°18'		+ 3°	
50	2	"F"		282°18'		-40°30'	
51	1	"C"		284°19'		- 61°	
52	1	"D"	4"	286°22'		-2°30'	
53	2	"F"	3"	296°27'		-39°30'	
54	1	"D"		302°30'		- 1°	
55	2	"F"		312°31'		-38°30'	
56	1	"D"		314°33'		- 1°	
57	1	"C"		316°-34'		-59°30'	
58	2	"F"		324°36'		-39°30'	
59	1	"D"		328°35'		-2°30'	
60	2	"F"		338°36'		-42°30'	
61	1	"D"		342°35'		- 4°	
62	1	"C"		345°37'		- 59°	
63	2	"F"		352°37'		- 39°	
64	1	"D"	3"	354°35'	EL. 2196'-10"	- 3°	

SEQ. NO.	DET. NO.	POS. ON PIPE	PIPE SIZE	AZ.	℄ EL.	SEE NOTE 4	
53-HCB-3" LOCATION-262 2ND RING							
1	2	"G"	2½"	13°-10'	EL. 2201'-6"	49-HCB-2½"	-92°30'
2	3	"I"		36°-39'		55-HCB-2½"	+40°-30'
3	3	"I"		57°-48'		55-HCB-2½"	+ 41°
4	3	"I"		96°-59'		55-HCB-2½"	+ 41°
5	3	"I"		135°-37'		55-HCB-2½"	+ 45°
6	3	"I"		176°-4'		55-HCB-2½"	+47°-30'
7	2	"G"		192°35'		55-HCB-2½"	- 92°
8	3	"I"		213°-12'		49-HCB-2½"	+ 40°
9	3	"I"		234°-55'		49-HCB-2½"	+ 38°
10	3	"I"		275°-14'		49-HCB-2½"	+40°-30'
11	3	"I"		315°		49-HCB-2½"	+42°-30'
12	3	"I"	2½"	356°-26'	EL 2201'-6"	49-HCB-2½"	+ 42°
LOC 262 ST RING	1	2	"G"	4"	SEE DET. 5 (M-03EN05)	48-HCB-4"	
LOC 261 ST RING	2	2	"G"	4"	SEE DET. 5 (M-03EN05)	54-HCB-4"	
LOC 261	1	3	"I"	2½"	SEE DET. 4 (M-03EN05)	41-HCB-2½"	
	2	2	"G"			41-HCB-2½"	
	3	3	"I"			41-HCB-2½"	
	4	3	"I"			43-HCB-2½"	
	5	2	"G"			43-HCB-2½"	
	6	3	"I"	2½"	SEE DET. 4 (M-03EN05)	43-HCB-2½"	
LOC 262	4 TH RING						
115	3	"H"	6"	1°-11'	EL. 2170'-3"	45-HCB-6"	- 30°
116	3	"H"	6"	180°55'	EL. 2170'-3"	51-HCB-6"	-31°

AS BUILT PIPE ELEVATIONS OF CONTAINMENT SPRAY RINGS

	AZIMUTH	PIPE ℄ EL.	PIPE RADIUS
49-HCB-2½" LOC. 262	1ST RING ℄ EL. 2201'-6" (REF.)		
	10°-12'-33"	2201'-6¾"	19'-0 7/16"
	30°-03'-35"	2201'-5"	19'-4 7/8"
	49°-58'-11"	2201'-5"	19'-5 5/8"
	70°-09'-32"	2201'-4½"	19'-6"
	90°-02'-48"	2201'-3 9/16"	19'-6 3/16"
	109°-34'-33"	2201'-3 7/16"	19'-6 5/16"
	129°-42'-25"	2201'-3 9/16"	19'-6 11/16"
	149°-33'-41"	2201'-4 9/16"	19'-5 9/16"
55-HCB-2½" LOC. 262	189°-30'-41"	2201'-2 9/32"	19'-3 11/16"
	209°-37'-35"	2201'-3 11/16"	18'-10½"
	229°-17'-38"	2201'-4¼"	18'-10 3/16"
	249°-35'-57"	2201'-4 3/8"	18'-10 5/16"
49-HCB-2½" LOC. 261	269°-53'-58"	2201'-4 1/8"	18'-10 7/16"
	289°55'-27"	2201'-4 13/16"	18'-10½"
	310°-12'-35"	2201'-5 7/16"	18'-10½"
	330°-19'-48"	2201'-5 3/4"	18'-11 7/16"
	2ND RING ℄ EL. 2196'-10" (REF.)		
47-HCB-4" LOC. 262	9°-59'-23"	2196'-5½"	30'-11 3/8"
	20°-05'-07"	2196'-5 7/8"	30'-11 15/16"
	30°-07'-39"	2196'-6 3/4"	31'-0 11/16"
	39°-58'-35"	2196'-9 9/16"	31'-0 8 1/16"
	50°-03'-48"	2196'-9 7/8"	30'-11 7/8"
	60°-07'-08"	2196'-9 7/16"	30'-11 3/4"
	70°-05'-48"	2196'-9 3/4"	30'-10 7/8"
	79°-56'-18"	2196'-9 3/4"	30'-9 3/4"
	90°-05'-00"	2196'-9 7/8"	30'-9 3/16"
	99°-50'-49"	2196'-9 5/8"	30'-9 3/8"
	109°-51'-56"	2196'-10"	30'-9 3/4"
	119°-58'-26"	2196'-9 3/16"	30'-11 1/8"
	129°-47'-09"	2196'-8½"	31'-0 3/8"
	139°-45'-03"	2196'-8 3/16"	31'-1½"
	149°-47'-46"	2196'-8 7/16"	30'-11 11/16"
	159°-40'-00"	2196'-8 7/16"	30'-11 9/16"
	169°-44'-21"	2196'-9 1/8"	30'-10 7/16"
47-HCB-3" LOC. 262	189°56'-51"	2196'-8"	31'-2 3/16"
	199°-44'-16"	2196'-7 7/8"	31'-0 3/8"
	209°-45'-42"	2196'-8 1/16"	30'-11"
	219°-47'-19"	2196'-9 3/16"	30'-9 3/16"
53-HCB-4" LOC. 261	229°-48'-08"	2196'-10"	30'-8"
	239°-55'-28"	2196'-10 5/8"	30'-7 5/8"
	249°54'-56"	2196'-10 7/16"	30'-7 3/16"
	259°-51'-09"	2196'-10"	30'-7 5/16"
	269°-48'-08"	2196'-9 3/4"	30'-7 1/16"
	279°-54'-01"	2196'-9¼"	30'-8 1/16"
	289°-55'-48"	2196'-9 3/8"	30'-9 7/16"
	300°-00'-32"	2196'-8 9/16"	30'-9 1/16"
	310°-03'-24"	2196'-9 5/16"	30'-10 1/16"
	320°-10'-45"	2196'-9 3/8"	30'-10 9/16"
	330°-12'-04"	2196'-9 1/4"	30'-11"
	340°-06'-39"	2196'-9 3/8"	31'-0 1/2"
	350°-16'-31"	2196'-9 9/16"	31'-0 5/8"
	3RD RING ℄ EL. 2195'3" (REF.)		
53-HCB-3" LOC. 262	10°-01'-28"	2195'-2 7/16"	34'-0 5/8"
	20°-02'-36"	2195'-2¼"	34'-1 9/16"
	30°-04'-47"	2195'-1 7/8"	34'-1¼"
	40°-01'-09"	2195'-0 9/8"	34'-0 5/8"
	50°-04'-43"	2195'-2 7/16"	34'-0 1/8"
	60°-09'-10"	2195'-1 9/16"	34'-0 1/2"
	69°-59'-10"	2195'-1"	34'-0 9/16"
	79°-55'-53"	2195'-0 11/16"	34'-0 5/8"
	90°-00'-27"	2195'-0 7/16"	34'-0 9/16"
52-HCB-4" LOC. 262	99°-49'-03"	2196'-11 7/8"	34'-0 3/8"
	109°-52'-24"	2195'-0 7/16"	34'-1 7/8"
	119°-54'-02"	2195'-0 3/16"	34'-1 9/16"
	129°-44'-31"	2195'-0 3/4"	34'-0 11/16"
	139°-45'-48"	2195'-0 11/16"	34'-0 1/8"
	149°-48'-08"	2195'-0 1/16"	34'-0 9/16"
	159°-45'-57"	2196'-11 7/8"	34'-0 3/8"
46-HCB-3" LOC. 261	169°-43'-00"	2195'-1 9/16"	33'-11 9/16"
	199°-47'-22"	2195'-0 9/16"	33'-11 9/8"
	209°-48'-54"	2195'-0 11/16"	33'-11 7/16"
	219°-40'-40"	2195'-1 9/16"	33'-10 7/16"
	229°-44'-42"	2195'-1 9/8"	33'-8 7/16"
	239°-53'-26"	2195'-1 9/16"	33'-8 1/16"
	249°-52'-24"	2195'-1 9/16"	33'-8 7/8"
	259°-51'-38"	2195'-1 7/8"	33'-9 3/4"
46-HCB-4" LOC. 262	269°-58'-14"	2195'-1 9/16"	33'-9 7/8"
	279°-58'-45"	2195'-0 13/16"	33'-10"
	290°-00'-31"	2195'-0 13/16"	33'-10 3/16"
	300°-01'-09"	2195'-1 7/16"	33'-9 11/16"
	309°-58'-16"	2195'-2 1/8"	33'-9 1/8"
	320°-04'-10"	2195'-2 5/8"	33'-8 3/4"
	330°-08'-44"	2195'-2 7/16"	33'-9 1/16"
	340°-01'-42"	2195'-2 5/16"	33'-9 13/16"
	4TH RING ℄ EL. 2170'-3" (REF.)		
45-HCB-4" LOC. 262	9°-59'-50"	2170'-1 3/4"	59'-4 3/4"
	19°-59'-20"	2170'-1 3/8"	59'-5 7/8"
	29°-51'-56"	2170'-1 15/16"	59'-6¼"
	39°-58'-50"	2170'-1 7/8"	59'-7 1/16"
	49°-55'-50"	2170'-2"	59'-7 1/16"
	59°-47'-20"	2170'-1 7/16"	59'-8 3/8"
	69°-50'-56"	2170'-1 5/8"	59'-6 7/8"
	79°-52'-50"	2170'-1 13/16"	59'-3 7/8"
	89°-55'-50"	2170'-1 11/16"	59'-2 3/4"
	99°-58'-14"	2170'-1 5/8"	59'-8 3/8"
	109°-59'-56"	2170'-2 1/16"	59'-11 3/16"
	119°-58'-14"	2170'-1½"	60'-1 1/16"
45-HCB-3" LOC. 262	129°-53'-38"	2170'-1 13/16"	60'-1 3/4"
	139°-53'-38"	2170'-2 1 1/16"	60'-0 13/16"
	149°-46'-44"	2170'-1 7/8"	60'-0"
	159°-47'-56"	2170'-1 13/16"	59'-8 3/16"
	169°-52'-26"	2170'-2"	59'-5 3/8"
	177°-23'-44"	2170'-1 7/8"	58'-11 3/16"
45-HCB-4" LOC. 261	189°-57'-02"	2170'-3½"	59'-1 3/16"
	199°-57'-02"	2170'-3 7/8"	59'-3¼"
	209°-57'-44"	2170'-1 7/16"	59'-3 15/16"
	219°-51'-50"	2170'-2 3/8"	59'-5"
	229°

VALVE INFORMATION TABLE							
VALVE NO.	CTR. OF GRAVITY LOC. FOR VALVE & OPR.			VALVE WEIGHT	VENDOR PRINT NO.	VALVE IDENT.	P.O. ITEM NO.
	X	Y	Z				
V082	—	+8 5/8"	—	150	M-221-00081	BECHTEL	2.07
V078	—	+8 5/8"	—	150	M-221-00081	BECHTEL	2.07
V018	+24 1/8"	+5/8"	-5 3/4"	605	M-221-040	BECHTEL	2.02
V017	-3/8"	+3 3/16"	+5/16"	408	M-221-054	BECHTEL	6.02
V014	+19 7/8"	+5/8"	+14 3/4"	605	M-221-040	BECHTEL	2.02
V013	+7/16"	+3 3/16"	+5/16"	408	M-221-054	BECHTEL	6.02
V077	—	—	—	7 1/2	M-231A-102	BECHTEL	2.23
V081	—	—	—	7 1/2	M-231A-102	BECHTEL	2.23

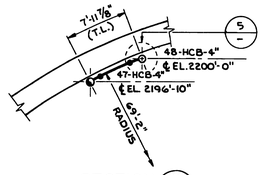

SECTION C (5 / M-13EN05)

SEE DRAWING M-13EN03 (C-5)

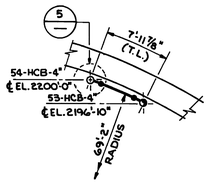

SECTION D (5 / M-13EN05)

SEE DRAWING M-13EN03 (F-5)

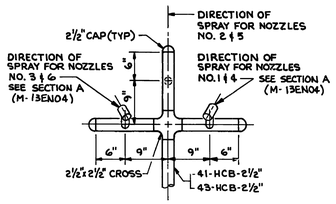

DETAIL 4 (M-13EN05)

SEE DRAWING M-13EN03 (D-5)

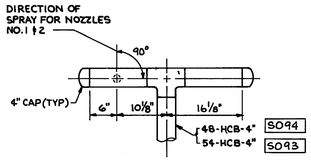

DETAIL 5 (M-13EN05)

SEE DRAWING M-13EN03 (C-5, F-5)

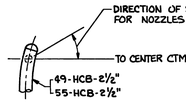

DETAIL 6 (M-13EN05)

SEE DRAWING M-13EN03 (F-6, D-5)

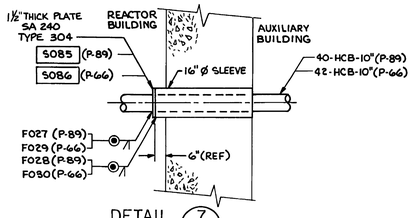

DETAIL 7 (M-13EN05)

SEE DRAWING M-13EN03 (G-2, H-8)

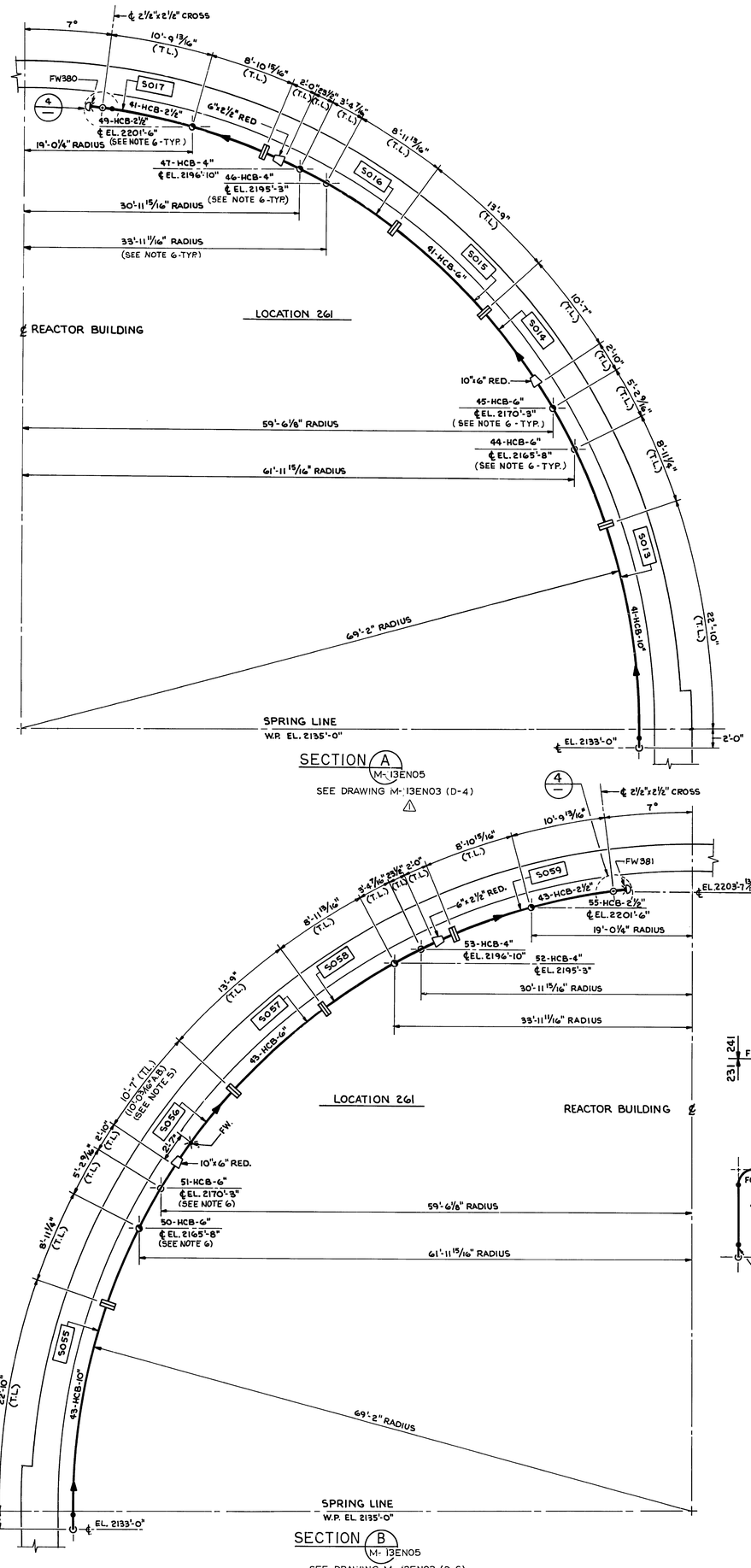

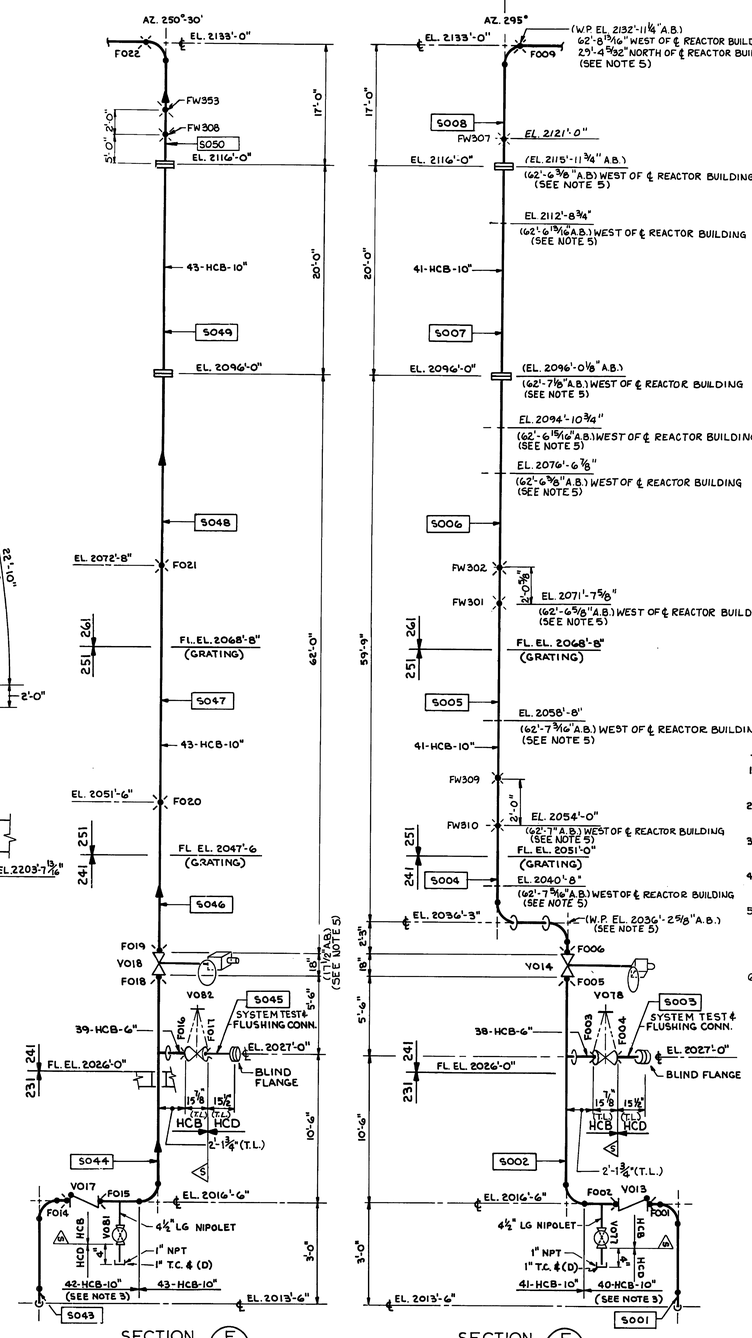

NOTES:

1. FOR GENERAL NOTES AND REFERENCES SEE DRAWING M-13EN01.
2. WORK THIS DRAWING WITH DRAWING M-13EN03 AND M-13EN04.
3. LINE NUMBERS 40-HCB-10" AND 42-HCB-10" SHALL BE SCHEDULE 80S.
4. THIS DRAWING WAS EXPANDED FROM M-13EN03 AND M-13EN04.
5. ELEVATIONS, DIMENSIONS, & LOCATING DIMENSIONS REFERENCED TO THIS NOTE REFLECT THE "AS-BUILT" (A.B.) CONDITION. ASSOCIATED DIMS. THAT ARE WITHIN ALLOWABLE TOLERANCES HAVE NOT BEEN ADJUSTED.
6. FOR AS-BUILT ELEVATIONS AND RADII OF SPRAY RINGS, SEE DWG. M-13EN04 (Q).

2 USAR FIG. 6.2.2-2-03

ESSENTIAL DRAWING

◐ REVISED ○ ISSUED	INCORPORATED CHG. DOC.	CHANGE PKG. NO.
THIS DWG. SUPERSEDED BY	REV.	THIS DWG. SUPERSEDES M-13EN05(D) REV. 01
REVISION NOTES: REF. CR 2007-000952		

WOLF CREEK NUCLEAR OPERATING CORPORATION — ELECTRONIC APPROVAL

PIPING ORTHOGRAPHIC CONTAINMENT SPRAY SYSTEM REACTOR BUILDING "A"&"B" TRAINS

SCALE	DRAWING NUMBER	SHEET	REV
NONE	M-13EN05		02

34X44 E SIZE

Released by Document Services Release Date: 08/31/07

THIS DRAWING AND THE DESIGN IT COVERS IS THE PROPERTY OF THE UTILITIES WHICH ARE PARTICIPATING IN THE SNUPPS PROJECT. IT IS LOANED ON THE BORROWER'S EXPRESS AGREEMENT THAT IT WILL NOT BE REPRODUCED, COPIED, LOANED, EXHIBITED, OR USED EXCEPT IN THE LIMITED WAY AND PRIVATE USE PERMITTED BY WRITTEN CONSENT GIVEN BY THE SNUPPS UTILITIES TO THE BORROWER.

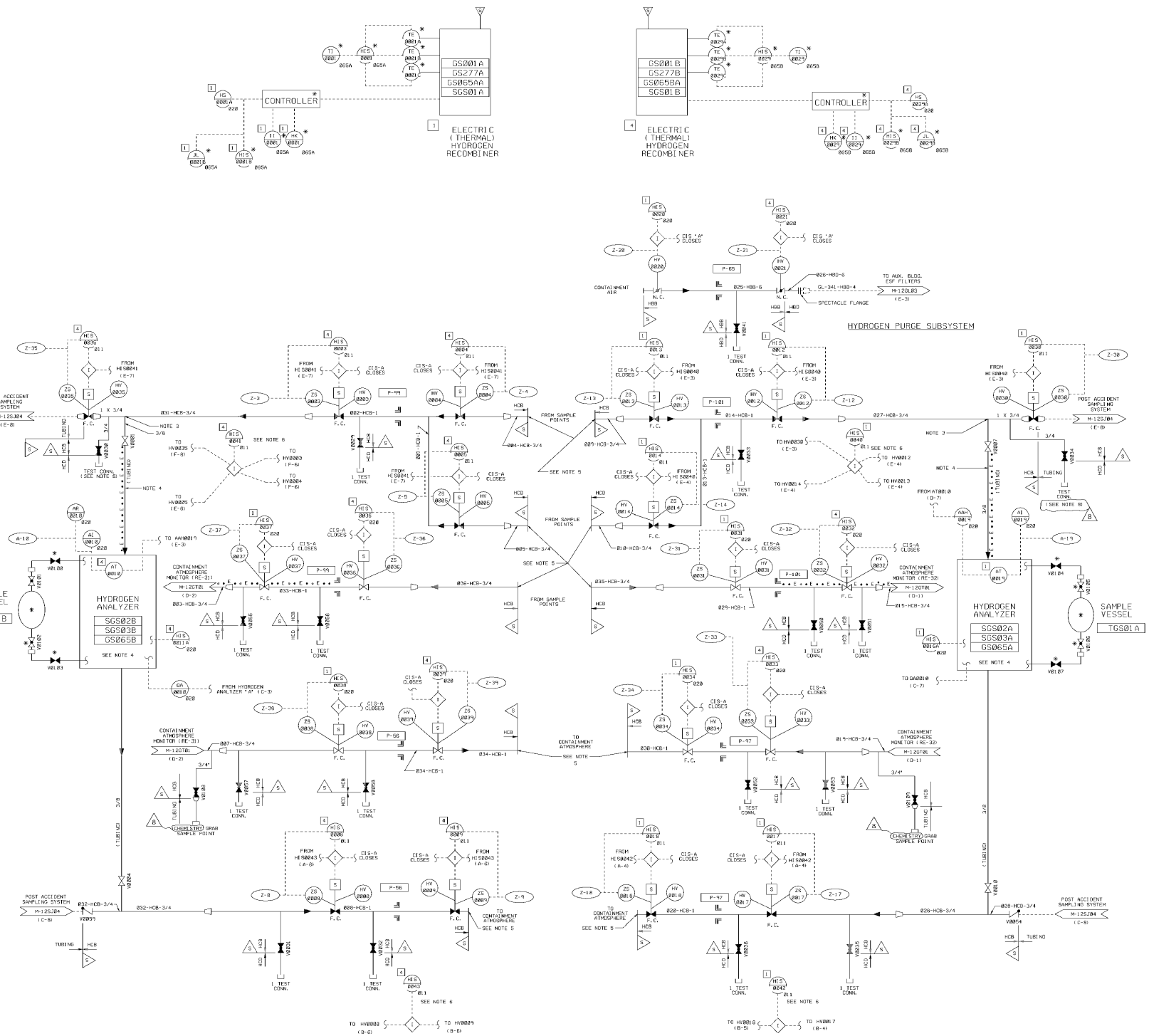

NOTES

1. THE HYDROGEN PURGE MAKEUP SUPPLY AIR IS SUPPLIED BY THE COMPRESSED AIR SYS. AND IS SHOWN ON P & I.D. M-12KN01.
2. THE HYDROGEN MIXING FANS ARE SHOWN ON THE CONTAINMENT COOLING SYS. P & I.D. M-12CN01.
3. THIS CONNECTION WILL BE LOCATED AS CLOSE AS POSSIBLE TO THE CONTAINMENT ISOLATION VALVE.
4. FOR HYDROGEN ANALYZERS & HEAT TRACING, SEE VENDOR (P & ID PRINT NO. J-354-0001).
5. THREADED END FOR USE DURING VALVE LEAK TESTING.
6. FOUR ISOLATION SWITCHES ARE PROVIDED ON THE MAIN CONTROL BOARD FOR POWER LOCKOUT. SWITCH LOCKOUTS ARE AS INDICATED.
7. CONTROL PANELS GS065A & GS065B ARE SUPPLIED BY HYDROGEN ANALYZER VENDOR (J-354). HYDROGEN RECOMBINER PANEL INSERTS GS065AA & GS065BA ARE SUPPLIED BY THE HYDROGEN RECOMBINER VENDOR (HK-037). CONTROL PANEL INSERTS ARE MOUNTED ON HYDROGEN ANALYZER PANELS GS065A & GS065B.
8. THIS VALVE SHALL NOT BE USED FOR CHEMISTRY SAMPLING (REF. PIR 99-1978).

USAR FIG. 6.2.5-1

ESSENTIAL DRAWING

⊗ REVISED ○ ISSUED	INCORPORATED CHG. DOC.		CHANGE NOTICE PKG. NO.
THIS DWG. SUPERSEDES DR	REV.	THIS DWG. SUPERSEDES	REV.
REVISION NOTES			

WOLF CREEK NUCLEAR OPERATING CORPORATION

ELECTRONIC APPROVAL

PIPING & INSTRUMENTATION DIAGRAM CONTAINMENT HYDROGEN CONTROL SYSTEM

SCALE	DRAWING NUMBER	SHEET	REV
NONE	M-12GS01		08

34844 E 92E

Released by Document Services Release Date: 06/06/02

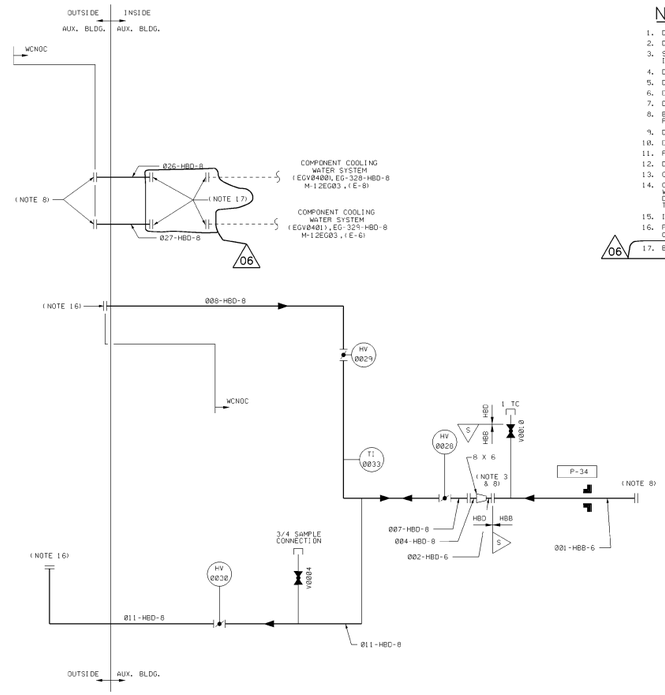

NOTES

1. DELETED.
2. DELETED.
3. SPOOL PIECE INSTALLED ONLY DURING ILRT AND CCW. IF CCW IS TO BE USED FOR COOLING.
4. DELETED.
5. DELETED.
6. DELETED.
7. DELETED.
8. BLIND FLANGES TO BE INSTALLED FOR NORMAL PLANT OPERATION.
9. DELETED.
10. DELETED.
11. FLEX. HOSE INSTALLED DURING ILRT.
12. DELETED.
13. CAP TO BE INSTALLED FOR NORMAL PLANT OPERATION.
14. CTMT. TEMPERATURE MONITORS TE-44 THRU TE-56 ARE PURCHASED BY WCNOC AND ARE USED FOR AMBIENT TEMPERATURE MONITORING DURING OPERATION AND MAY BE DISCONNECTED DURING ILRT. MONITOR TE-52 MAY BE INSTALLED AT A FUTURE DATE.
15. INSTRUMENTATION TO BE PROVIDED BY WCNOC AT THE TIME OF ILRT.
16. PRESSURIZATION EQUIPMENT TO BE PROVIDED BY WCNOC AT THE TIME OF ILRT.
17. BLIND FLANGES TO BE INSTALLED. SPOOL PIECES REMOVED. (06)

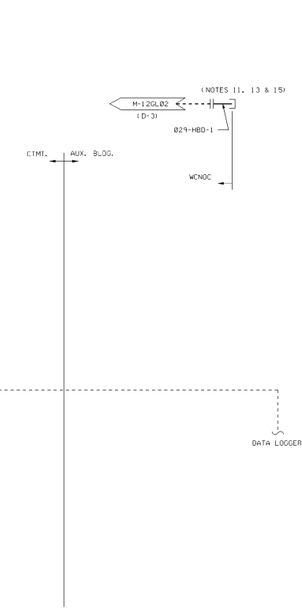

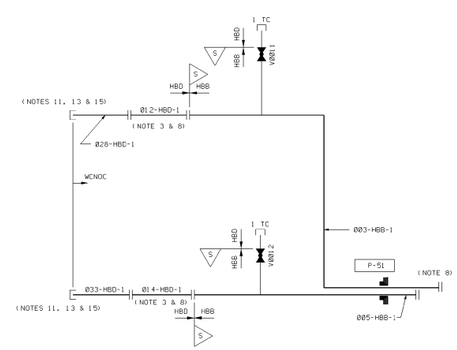

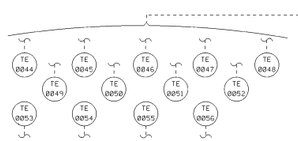

CTMT. TEMPERATURE MONITORS (13)
(NOTE 14)

USAR FIG. 6.2.6-1-00

ESSENTIAL DRAWING

REVISED / ISSUED — INCORPORATED CHG. DOC. CR#00003872 — CHANGE PKG. NO.

THIS DWG. SUPERSEDED BY — REV. — THIS DWG. SUPERSEDES — REV.

REVISION NOTES:

WOLF CREEK NUCLEAR OPERATING CORPORATION — ELECTRONIC APPROVAL

PIPING & INSTRUMENTATION DIAGRAM CONTAINMENT INTEGRATED LEAK RATE TEST

SCALE	DRAWING NUMBER	SHEET	REV
NONE	M-12GP01		06

34A44 E SIZE

M-12GP01-1-06

Released by Document Services Release Date: 03/01/10

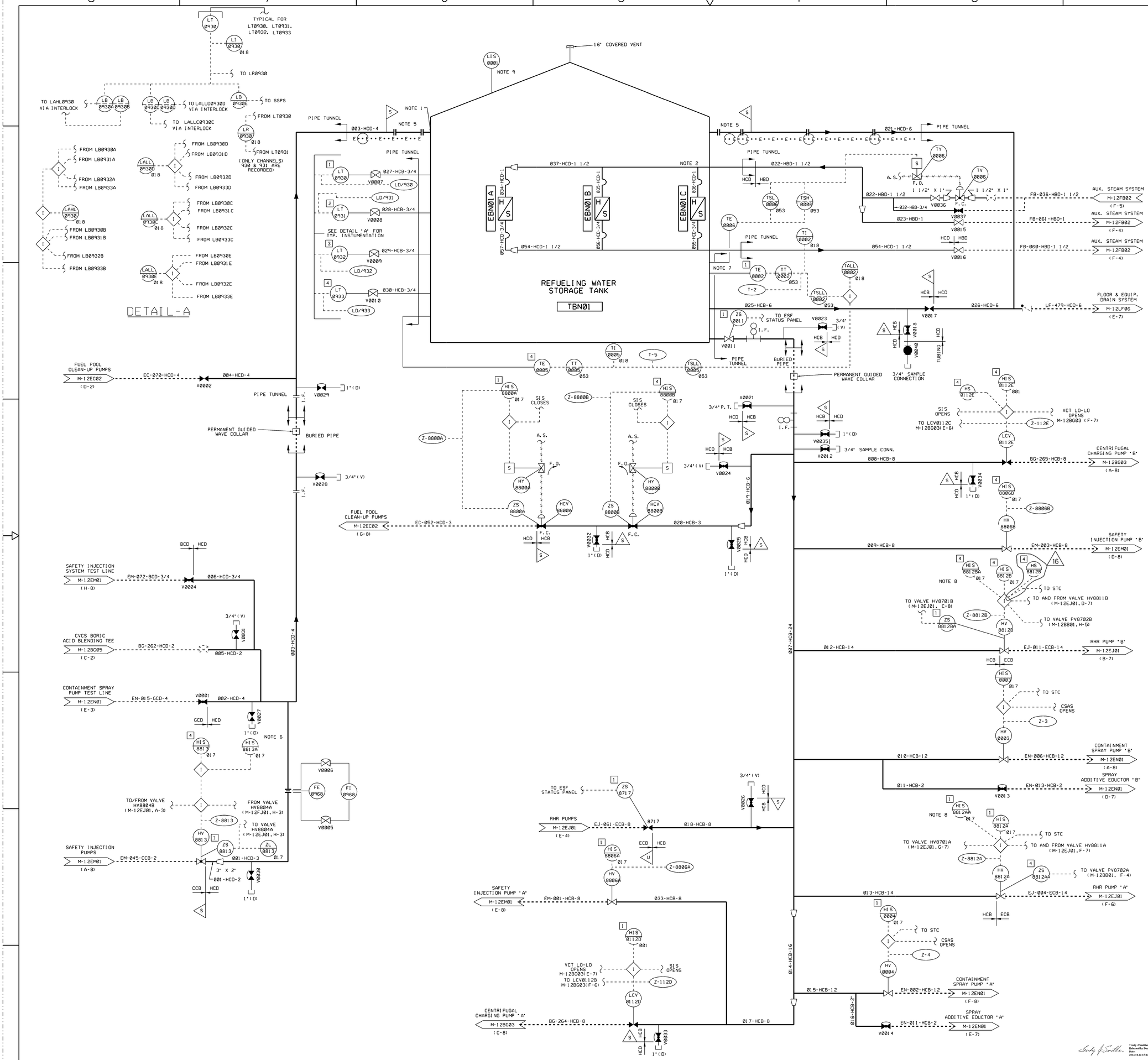

NOTES

1. LOCATE CONNECTION ABOVE NORMAL WATER LEVEL.
2. HEATING COIL AND STEAM SUPPLY AND RETURN LINES ARE NOT Q-LISTED.
3. REFERENCED WESTINGHOUSE DRAWINGS: M-738-00007, M-738-00010, M-738-00011, M-738-00012, M-738-00013.
4. DELETED.
5. REMOVABLE SPOOL PIPE REQUIRED FOR HYDROTESTING
6. ISOLATION SWITCH PROVIDED IN THE CONTROL ROOM FOR POWER LOCKOUT OF VALVE HV-8813.
7. THE THERMOWELL FOR TE-6 WILL BE IN ACCORDANCE WITH SPEC. J-5631Q.
8. TEST INDICATING SWITCH TO VERIFY CIRCUIT OPERABILITY
9. INSTRUMENT INSTALLED, BUT NOT IN SERVICE.

REFERENCE:

ANY REVISION TO THIS DRAWING MAY REQUIRE A REVISION TO THE HIGH PRESSURE COOLANT INJECTION SYS. TEST LINE P & I.D. M-12EM03.

USAR FIG. 6.3-1-01

ESSENTIAL DRAWING

(X) REVISED ( ) ISSUED — INCORPORATED CHG. DOC. CR #00074497 — CHANGE PKG. NO.

THIS DWG. SUPERSEDED BY — REV. — THIS DWG. SUPERSEDES — REV.

REVISION NOTES:

WOLF CREEK NUCLEAR OPERATING CORPORATION — ELECTRONIC APPROVAL

Trudy J Smither
Released by Document Services. Release Date:
2013.10.24 15:12:02 -05'00'

PIPING & INSTRUMENTATION DIAGRAM BORATED REFUELING WATER STORAGE SYSTEM

SCALE	DRAWING NUMBER	SHEET	REV
NONE	M-12BN01		16

34X44 E SIZE

M-12BN01-1-16

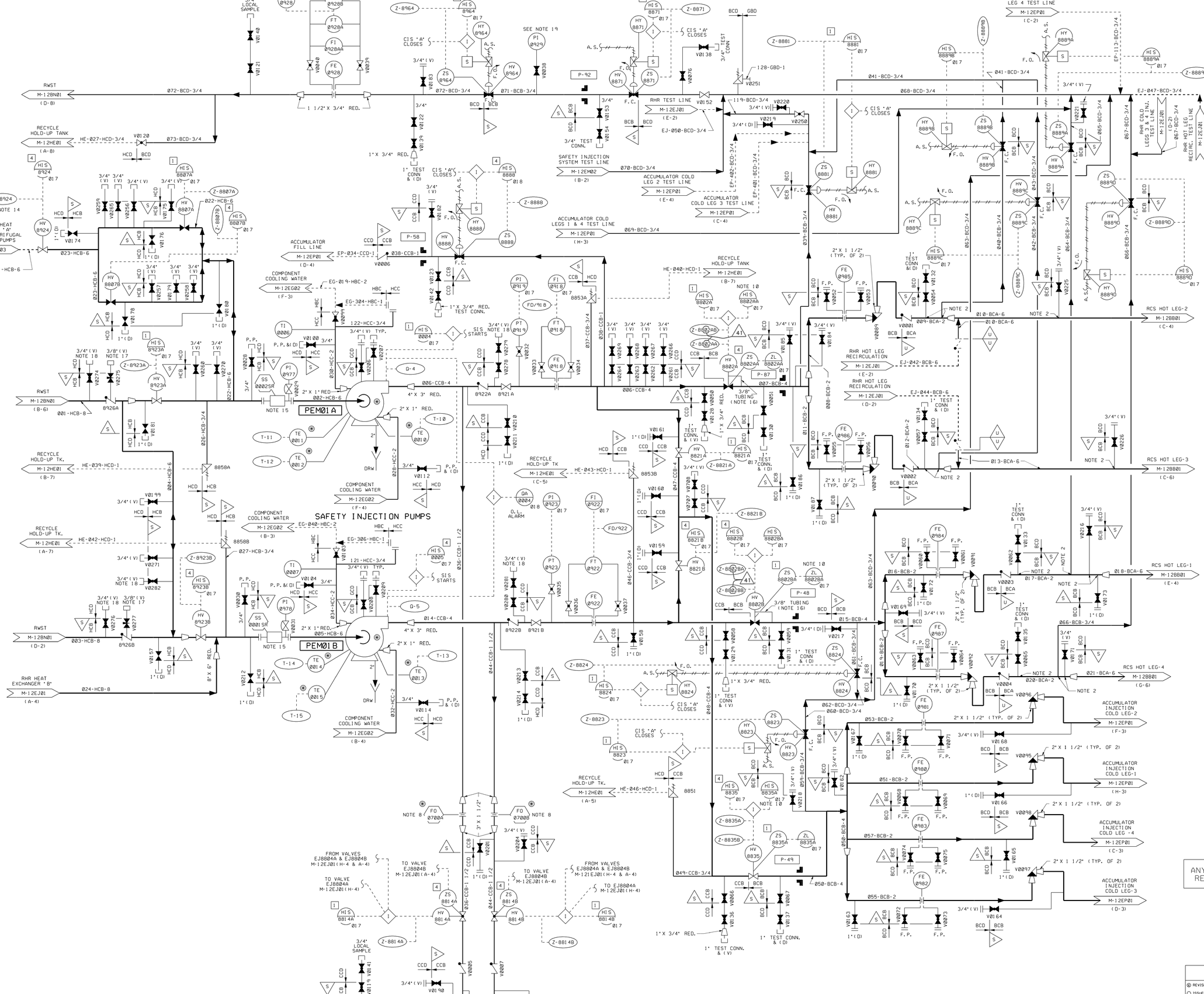

NOTES

1. DELETED.
2. DRILLED RESTRICTION 3/8" IN DIAMETER. POINT AT WHICH QUALITY GROUP CLASSIFICATION IS CHANGED FROM 'A' TO 'B'. INSERVICE INSPECTION WILL BE PERFORMED ON CLASS 'A' PIPE UP TO THIS ORIFICE.
3. SEE WESTINGHOUSE DRAWINGS M-738-00011, M-738-00012, AND M-738-00013.
4. DELETED.
5. DELETED.
6. PIPING CONTAINING 12 PERCENT BORIC ACID WILL HAVE TEES WITH A CLEANOUT TO PERMIT CLEANING OF SYSTEM AS REQUIRED.
7. FOR P&ID LEGEND AND SYMBOLS SEE DRAWING M-020101 THRU M-020104.
8. MINIFLOW ORIFICE SUPPLIED BY SI PUMP VENDOR
9. HEAT TRACING NON-CLASS IE.
10. ISOLATION SWITCH PROVIDED IN THE CONTROL ROOM FOR POWER LOCKOUT OF VALVES 8802A, B AND 8835.
11. DELETED.
12. DELETED.
13. ALL WELDS IN ASME SECTION III CLASS 1 COMPONENTS AND ASME SECTION III CLASS 1 PIPING OF NOMINAL PIPE SIZE GREATER THAN 1" MAY BE SUBJECT TO VOLUMETRIC EXAMINATION DURING THE PRESERVICE INSPECTION (PSI) AND/OR THE INSERVICE INSPECTION (ISI) PROGRAMS THE SPECIFIC WELDS AND THEIR INSPECTION REQUIREMENTS ARE DELINEATED IN THE APPLICABLE PSI/ISI WORK PLANS PROVIDED UNDER SPECIFICATION M-189. BOUNDARIES OF THESE PIPING SYSTEMS ARE IDENTIFIED WITH A ◁ SYMBOL FOR CLARITY.
14. CIRCUIT BREAKER FOR EMHV8924 SHALL BE LOCKED OPEN AT ALL TIMES. A STEM BLOCKING DEVICE MAY BE INSTALLED ON VALVE EMHV8924 TO MAINTAIN THE VALVE IN THE OPEN POSITION AS REQUIRED BY PMR 4145.
15. REMOVABLE SPOOL WITH SPACER RING INSTALLED. REPLACEMENT FOR START-UP STRAINERI.
16. VALVES EMHV8802A & EMHV8802B ARE EQUIPPED WITH AN ANTI PRESSURE LOCKING BYPASS. SEE M-724-02023.
17. VENT INSTALLED IN THE BONNET OF THE CHECK VALVE USING 3/8" INSTRUMENT FITTINGS AND VALVE.
18. VENT INSTALLED WITH CAM AND GROOVE ADAPTER AND DUST CAP WITH BUNA-N GASKET.
19. BLOCK ISOLATION VALVE ON EMP10929 CLOSED UNDER NORMAL OPERATING CONDITION AND SERVES AS SECONDARY ISOLATION FOR CTMT PENETRATION.

USAR FIG. 6.3-1-02

ESSENTIAL DRAWING

REVISED / ISSUED — INCORPORATED CHG. DOC. — CHANGE PKG. NO.

THIS DWG. SUPERSEDED BY — REV. — THIS DWG. SUPERSEDES — REV.

REVISION NOTES: REVISED INFORMATION @ F4 & D4 AS PER AP 05-10 SECTION 6.10.1

WOLF CREEK NUCLEAR OPERATING CORPORATION — ELECTRONIC APPROVAL

Key Lynn Smith Released by Document Services. Release Date: 2012.11.13 15:25:40 -06'00'

PIPING & INSTRUMENTATION DIAGRAM HIGH PRESSURE COOLANT INJECTION SYSTEM

SCALE	DRAWING NUMBER	SHEET	REV
NONE	M-12EM01	1	41

34X44 E SIZE

M-12EM01-1-41

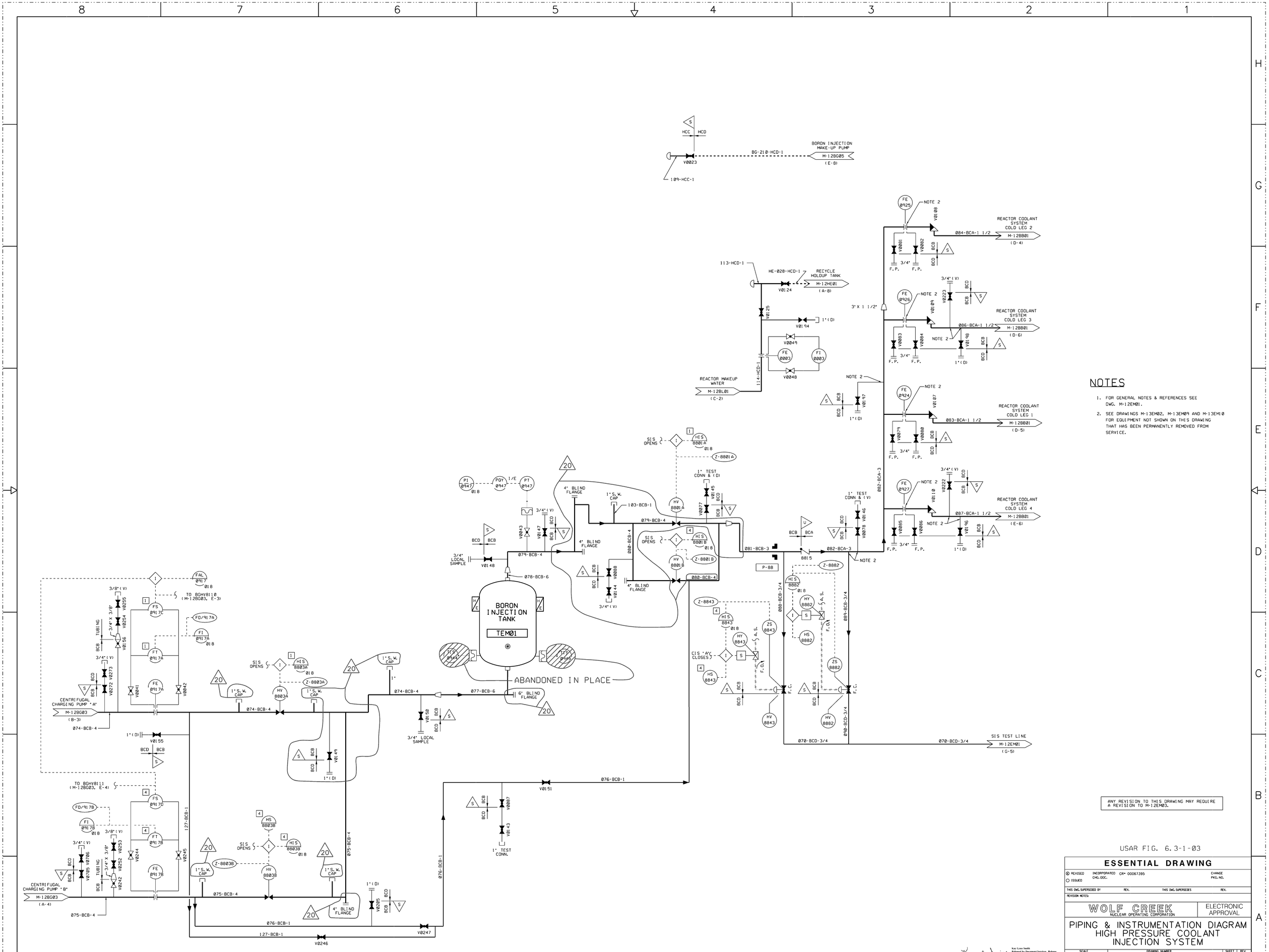

NOTES

1. FOR GENERAL NOTES & REFERENCES SEE DWG. M-12EM01.
2. SEE DRAWINGS M-13EM02, M-13EM09 AND M-13EM10 FOR EQUIPMENT NOT SHOWN ON THIS DRAWING THAT HAS BEEN PERMANENTLY REMOVED FROM SERVICE.

ANY REVISION TO THIS DRAWING MAY REQUIRE A REVISION TO M-12EM03.

USAR FIG. 6.3-1-03

ESSENTIAL DRAWING

⊗ REVISED ○ ISSUED	INCORPORATED CHG. DOC.	CR* 00067395	CHANGE PKG. NO.
THIS DWG. SUPERSEDED BY	REV.	THIS DWG. SUPERSEDES	REV.
REVISION NOTES:			

WOLF CREEK NUCLEAR OPERATING CORPORATION

ELECTRONIC APPROVAL

Kay Lynn Smith
Released by Document Services. Release Date:
2013.05.28 07:51:28 -05'00'

PIPING & INSTRUMENTATION DIAGRAM HIGH PRESSURE COOLANT INJECTION SYSTEM

SCALE	DRAWING NUMBER	SHEET	REV
NONE	M-12EM02	20	A

34X44 E SIZE

M-12EM02-1-20

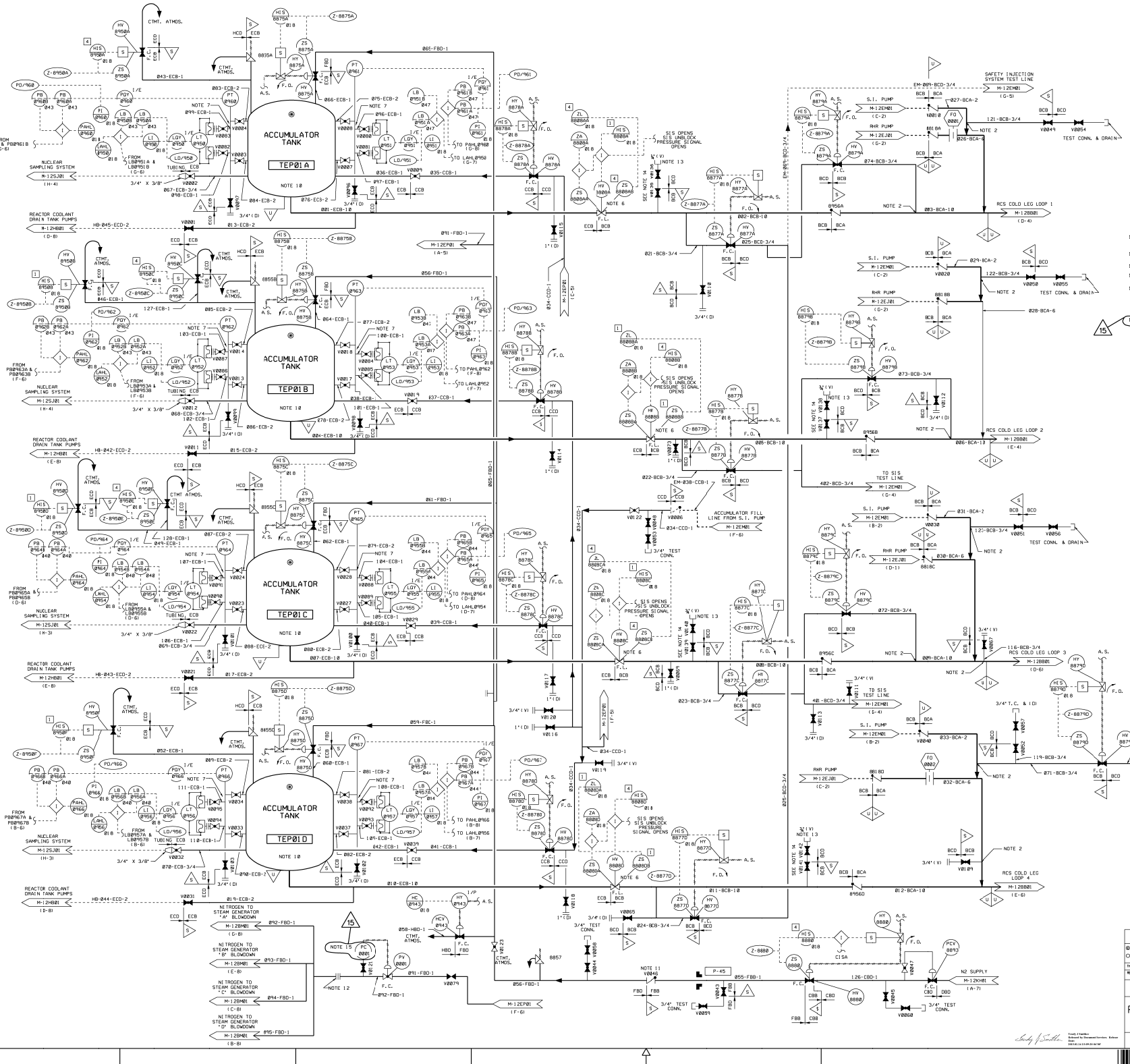

NOTES

1. ALL WELDS IN ASME SECTION III, CLASS 1 COMPONENTS AND ASME SECTION III, CLASS 1 PIPING OF NOMINAL PIPE SIZE GREATER THAN 1" MAY BE SUBJECT TO VOLUMETRIC EXAMINATION DURING PRESERVICE INSPECTION (PSI) AND/OR INSERVICE INSPECTION (ISI) PROGRAMS. THE SPECIFIC WELDS AND THEIR INSPECTION REQUIREMENTS ARE DELINEATED IN THE APPLICABLE PSI/ISI WORK PLANS PROVIDED UNDER SPECIFICATION M-18%. BOUNDARIES OF THESE PIPING SYSTEMS ARE IDENTIFIED WITH A ◁ SYMBOL FOR CLARITY.
2. PROVIDE 3/8" I.D. FLOW RESTRICTOR FOR INTERFACE BOUNDARY BETWEEN QUALITY GROUP CLASSIFICATION 'A' AND 'B'. INSERVICE INSPECTION REQUIREMENTS NOT APPLICABLE TO THE QUALITY GROUP CLASSIFICATION 'B'.
3. THIS DRAWING IS BASED ON WESTINGHOUSE DRAWING M-73B-00012.
4. DELETED.
5. DELETED.
6. THE MOTOR CONTROL CENTER CIRCUIT BREAKER SHALL BE LOCKED FOR VALVES HV-8808A, B, C & D, UNDER NORMAL PLANT OPERATION IN THE POWER DISCONNECTED POSITION.
7. THE 2" DIAMETER ACCUMULATOR STANDPIPE, LOCATED BETWEEN THE UPPER AND LOWER TANK TAPS, SHOULD HAVE TRANSMITTER TAPS LOCATED 8 INCHES ABOVE AND BELOW THE NORMAL WATER LEVEL OF THE ACCUMULATOR TANK.
8. WELDS IN ASME SECTION III, CLASS 2 PIPING SYSTEMS OF NOMINAL PIPE SIZE GREATER THAN 4", WITHIN THE BOUNDARIES IDENTIFIED BY THE ◁ SYMBOL, MAY BE SUBJECT TO VOLUMETRIC EXAMINATION DURING THE PSI AND/OR ISI PROGRAMS. THE SPECIFIC WELDS WITHIN THESE BOUNDARIES AND THEIR INSPECTION REQUIREMENTS ARE DELINEATED IN THE PSI/ISI WORK PLANS PROVIDED UNDER SPECIFICATION M-8%.
9. ◁▷ SYMBOLS ARE PROVIDED FOR CLARITY TO INDICATE THAT PIPING BOUNDARIES, WHICH ARE SUBJECT TO PSI/ISI PROGRAMS, CONTINUE ONTO OTHER P & ID'S.
10. WELDS OF THE ACCUMULATOR TANKS ARE SUBJECT TO PSI/ISI EXAMINATION AS DELINEATED IN THE PSI/ISI WORK PLANS PROVIDED UNDER SPECIFICATION M-18%.
11. VALVE V0046 IS BOUGHT UNDER SPECIFICATION J-603A AND IS VALVE CLASS ECD. SEE DWG. J-603A-00001.
12. FIELD FABRICATED BLIND FLANGE, PER CCP 06403 MAY BE INSTALLED.
13. TEST CONNECTION AND/OR VENT INSTALLED WITH CAM AND GROOVE ADAPTER AND DUST CAP WITH BUNA-N GASKET.
14. PER GENERAL NOTE 4,G.2 OF MS-02 WHICH STATES "FOR REASONS OF ECONOMY AND INTERCHANGEABILITY, THE USE OF VALVES MANUFACTURED AT A HIGHER QUALITY GROUP AND PRESSURE RATING THEN SPECIFIED VALVE CLASS IN THE PIPING CLASS SHEET IS AN ACCEPTABLE ALTERNATE." VENT VALVE ASSEMBLIES SHALL BE FABRICATED WITH STAINLESS STEEL PIPING AND VALVES.
15. FUNCTION CHANGED TO MANUAL PRESSURE CONTROL.

ANY REVISION TO THIS DRAWING MAY REQUIRE A REVISION TO M-12EM01.

USAR FIG. 6.3-1-04

ESSENTIAL DRAWING

REVISED / ISSUED — INCORPORATED CHG. DOC. WIP-M-12EP01-005-A-1 — CHANGE 01234 PKG. NO.

THIS DWG. SUPERSEDES — REV. — THIS DWG. SUPERSEDES — REV.

REVISION NOTES:

WOLF CREEK NUCLEAR OPERATING CORPORATION — ELECTRONIC APPROVAL

PIPING & INSTRUMENTATION DIAGRAM ACCUMULATOR SAFETY INJECTION

SCALE	DRAWING NUMBER	SHEET	REV
NONE	M-12EP01		15

24H E SIZE

M-12EP01-1-15

Trusty J Sudder
Released by Document Services. Release Date: 2015.01.13 13:09:33 00'00'