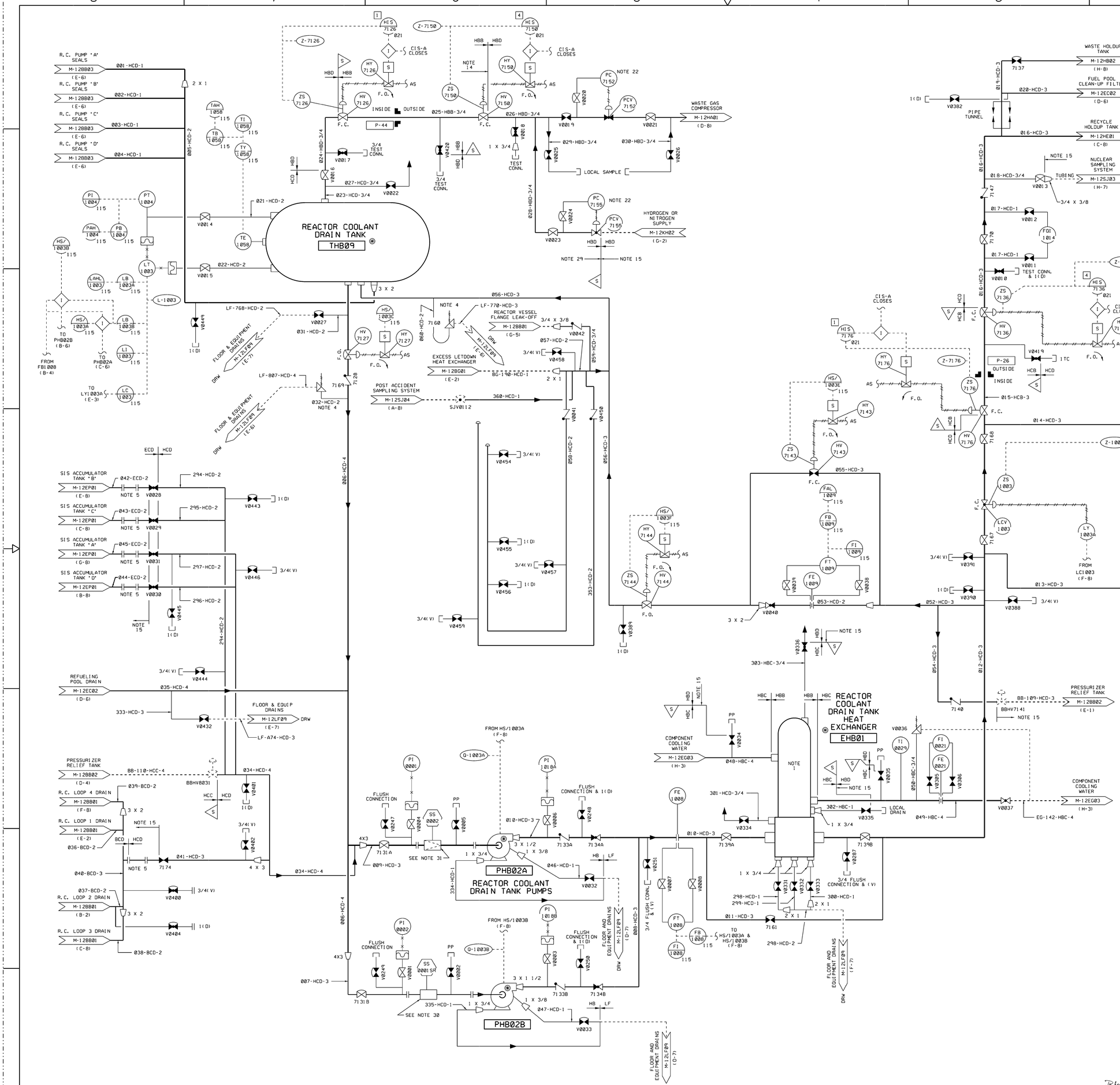

NOTES

1. THE FOLLOWING WESTINGHOUSE STANDARD EQUIPMENT IS SUPPLIED TO A HIGHER QUALITY GROUP/SEISMIC CLASSIFICATION AND PRINCIPAL CONSTRUCTION CODE THAN IS REQUIRED BASED ON ITS SAFETY RELATED IMPORTANCE AS DICTATED BY SERVICE AND FUNCTIONAL REQUIREMENTS AND BY THE CONSEQUENCE OF THEIR FAILURE. EQUIPMENT CLASSIFICATION SHOWN IS FOR INTERFACE PURPOSES ONLY (IE. WELD END PREPS). ACTUAL CLASSIFICATION OF THE EQUIPMENT IS THE LOWER CLASSIFICATION AS INDICATED FOR THE ASSOCIATED PIPING.
   A. WASTE HOLDUP TANK.
   B. WASTE EVAP. FEED PUMP
   C. WASTE EVAP. FEED FILTER.
   D. REACTOR COOLANT DRAIN TANK HEAT EXCHANGER (SHELL SIDE)
   E. FL DRAIN TANK FILTER
   F. WASTE EVAP. CONDENSATE DEMINERALIZER
   G. WASTE MONITOR TANK DEMINERALIZER
   H. WASTE MONITOR TANK FILTER
   I. LAUNDRY AND HOT SHOWER TANK FILTER.
2. PORTIONS OF THIS SYSTEM THAT CONTAIN RADIOACTIVE FLUIDS AND ARE IDENTIFIED BY QUALITY CLASSIFICATION "D" SHALL MEET THE AUGMENTING REQUIREMENTS
3. THIS DRAWING BASED ON WESTINGHOUSE DRAWINGS M-738-00016 THROUGH M-738-00019.
4. MAKE CONNECTION TO SIDE OR BOTTOM OF PIPE.
5. SPOOL PIECE NORMALLY REMOVED. TO BE INSTALLED ONLY AFTER DEPRESSURIZATION FOR DRAINING.
6. VENT LINES TO EXTEND WITHIN 12 INCHES OF FLOOR
7. OVERFLOW LOOP SEAL TO EXTEND 12 INCHES BELOW TANK CONNECTION AND TO TOP OF TANK WITH SIPHON BREAK ON TOP OF LOOP SEAL.
8. LOOP SEAL TO EXTEND 12 INCHES BELOW NOZZLE AND TOP OF SEAL TO EXTEND 6 IN BELOW DIAPHRAGM FLANGE WITH SIPHON BREAKER LOCATED ON TOP OF LOOP
9. LOOP SEAL TO EXTEND 12" ABOVE AND BELOW PIPE
10. THE FOLLOWING EQUIPMENT IS SUPPLIED WITH EVAPORATOR PACKAGE BY VENDOR.
    A. Y-STRAINER-SHB14 G WEV0026
    B. PCV0333
    C. TCV0325
    D. PCV0337
    E. FCV0329
    F. WEV0027
11. LOOP SEAL TO EXTEND 12 INCHES BELOW PIPE
12. THE PORTION OF THIS SYSTEM THAT IS Q-LISTED INCLUDES PIPING AND VALVES ASSOCIATED WITH CONTAINMENT PENETRATIONS AND THE SHELL SIDE OF THE REACTOR COOLANT DRAIN TANK HEAT EXCHANGER AND ITS ASSOCIATED PIPING AND VALVES
13. MECHANICAL DESIGNATION PER M-1Q001.
14. THIS POINT DEFINES THE "Q" BOUNDARY FOR CONTAINMENT ISOLATION FROM THIS POINT DOWNSTREAM PIPING IS ANALYZED CONSIDERING A SINGLE DEGREE OF FREEDOM.
15. INDICATED PORTIONS OF THIS SYSTEM IDENTIFIED BY THIS NOTE ARE QUALITY GROUP "D" NON-AUGMENTED.
16.
17. CONTROLS FOR WASTE EVAPORATOR ARE ON PANEL HB 135 (WASTE EVAPORATOR CONTROL PANEL)
18. LINES 014 & 015 TO BE SCH. 80S WITH SCH. 40S BORE TO MATCH VALVES 7168, 7135, LCV-1003, HV-7136.
19. INDICATED PORTIONS OF THIS SYSTEM TO BE 316 LSS
20. INDICATED VALVES TO BE LOCATED CLOSE TOGETHER
21. LOCATE INDICATOR WITHIN VIEW PUMP THROTTLING VALVE.
22. PRESSURE CONTROLLER IS VALVE MOUNTED
23. INSTRUMENTATION IDENTIFIED BY THIS NOTE IS SUPPLIED BY THE SOLID RADWASTE PACKAGE VENDOR UNDER SPECIFICATION M-135.
24. DELETED.
25. DELETED.
26. PIPING AND INSTRUMENTATION DIAGRAM FOR THE WASTE EVAPORATOR IS SHOWN ON WCNOC DWG. M-726-00041.
27. REMOVABLE SPOOL PROVIDED FOR START-UP.
28. LOCATE WASTE EVAPORATOR REAGENT TANK TO ALLOW GRAVITY DRAIN TO WASTE EVAPORATOR
29. PIPING DOWNSTREAM OF THIS POINT IS ANALYZED CONSIDERING A SINGLE DEGREE OF FREEDOM
30. REMOVABLE SPOOL WITH SPACER RING INSTALLED. (REPLACEMENT FOR START-UP STRAINER).
31. STRAINER HBSS0002 INSTALLED.

USAR FIG. 11.2-1-01

ESSENTIAL DRAWING

⊗ REVISED ○ ISSUED	INCORPORATED CHG. DOC.	CR ACTION 29532-01-05	CHANGE PKG. NO.
THIS DWG. SUPERSEDED BY	REV.	THIS DWG. SUPERSEDES	REV.
REVISION NOTES	REVISED TO REGENERATE CORRECT LINESTYLES PER CR 029532.		

WOLF CREEK NUCLEAR OPERATING CORPORATION

ELECTRONIC APPROVAL

PIPING AND INSTRUMENTATION DIAGRAM LIQUID RADWASTE SYSTEM

SCALE	DRAWING NUMBER	SHEET	REV
NONE	M-12HB01		14

Released by Document Services. Release Date: 2011.12.13 12:47:36 -06'00'

M-12HB01+1+14

34X44 E SIZE

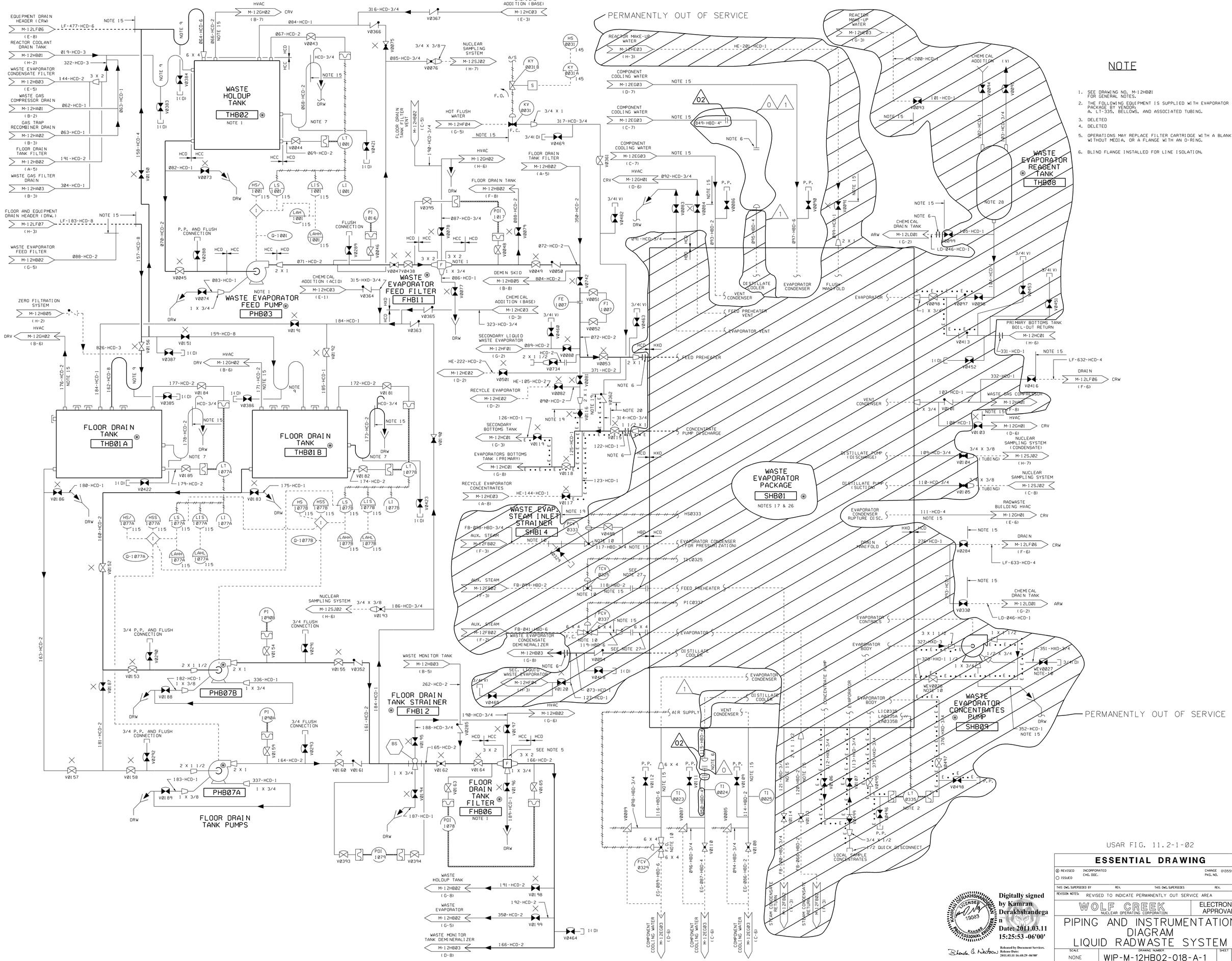
PERMANENTLY OUT OF SERVICE
WASTE HOLDUP TANK
THB02
WASTE EVAPORATOR FEED PUMP
PHB03
WASTE EVAPORATOR FEED FILTER
FHB11
FLOOR DRAIN TANK
THB01A
FLOOR DRAIN TANK
THB01B
WASTE EVAPORATOR REAGENT TANK
THB08
WASTE EVAPORATOR PACKAGE
SHB01
WASTE EVAPORATOR CONCENTRATES PUMP
SHB09
WASTE EVAP. STEAM INLET STRAINER
SHB14
FLOOR DRAIN TANK STRAINER
FHB12
FLOOR DRAIN TANK FILTER
FHB06
PHB07B
PHB07A
FLOOR DRAIN TANK PUMPS
NOTE
1. SEE DRAWING NO. M-12HB01 FOR GENERAL NOTES.
2. THE FOLLOWING EQUIPMENT IS SUPPLIED WITH EVAPORATOR PACKAGE BY VENDOR: A. LT-335, BELLOWS, AND ASSOCIATED TUBING.
3. DELETED
4. DELETED
5. OPERATIONS MAY REPLACE FILTER CARTRIDGE WITH A BLANK WITHOUT MEDIA, OR A FLANGE WITH AN O-RING.
6. BLIND FLANGE INSTALLED FOR LINE ISOLATION.
USAR FIG. 11.2-1-02
ESSENTIAL DRAWING
REVISED
ISSUED
INCORPORATED CHG. DOC.
CHANGE PKG. NO. 013559
THIS DWG. SUPERSEDED BY
REV.
THIS DWG. SUPERSEDES
REV.
REVISION NOTES: REVISED TO INDICATE PERMANENTLY OUT SERVICE AREA
WOLF CREEK NUCLEAR OPERATING CORPORATION
ELECTRONIC APPROVAL
PIPING AND INSTRUMENTATION DIAGRAM
LIQUID RADWASTE SYSTEM
SCALE NONE
DRAWING NUMBER WIP-M-12HB02-018-A-1
SHEET
REV. 02
Digitally signed by Kamran Derakhshandegan
Date: 2011.03.11 15:25:53 -06'00'
Released by Document Services. Release Date: 2011.03.11 16:48:29 -06'00'
34X44 E SIZE
WIP-M-12HB02-018-A-1-1-02

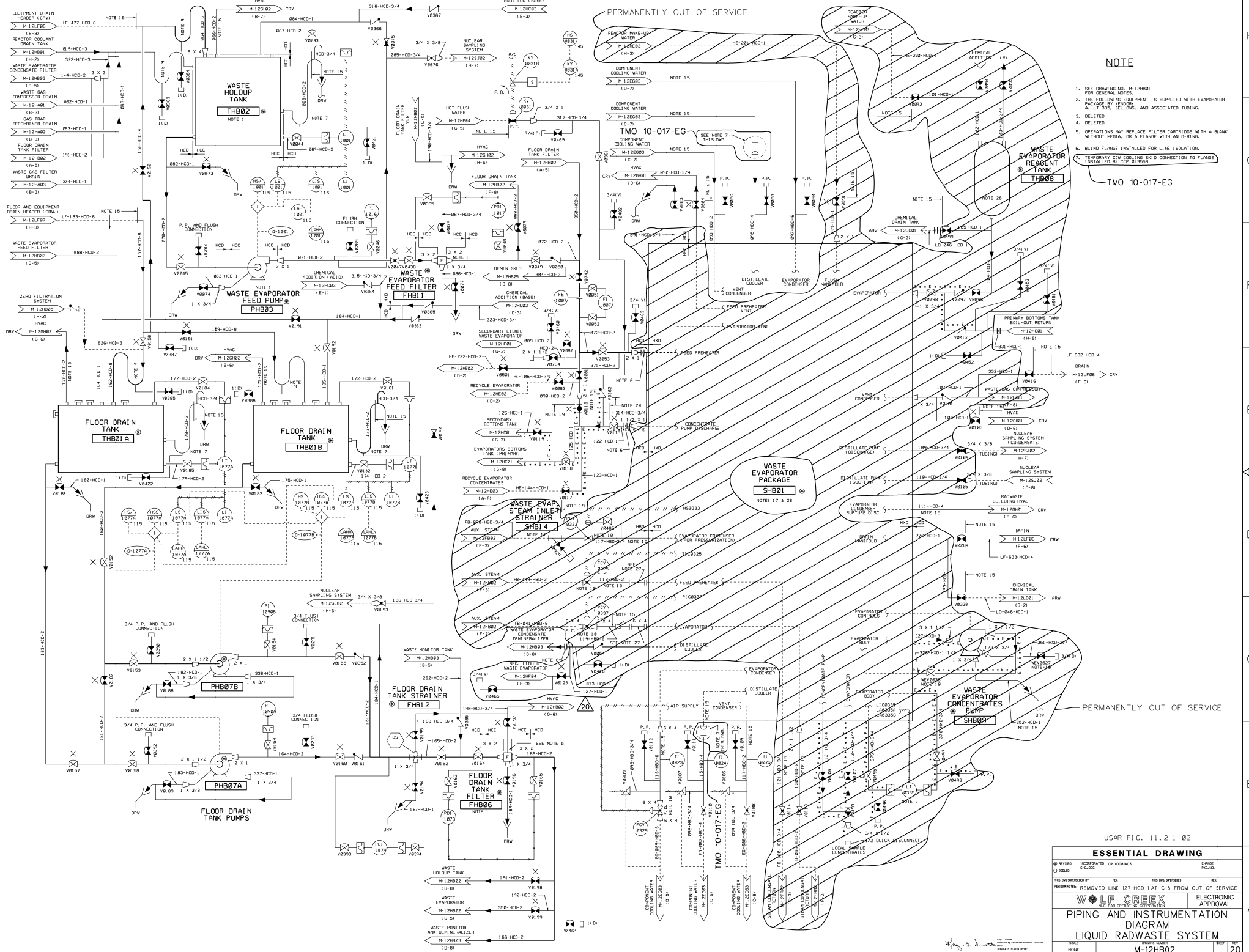

USAR FIG. 11.2-1-02

ESSENTIAL DRAWING

REVISED / ISSUED	INCORPORATED CR 03081403 CHG. DOC. / CHANGE PKG. NO.
THIS DWG.SUPERSEDES BY	REV / THIS DWG.SUPERSEDES / REV.
REVISION NOTES:	REMOVED LINE 127-HCD-1 AT C-5 FROM OUT OF SERVICE

WOLF CREEK NUCLEAR OPERATING CORPORATION — ELECTRONIC APPROVAL

PIPING AND INSTRUMENTATION DIAGRAM LIQUID RADWASTE SYSTEM

SCALE	DRAWING NUMBER	SHEET	REV
NONE	M-12HB02	20	

34X44 E SIZE
M-12HB02-1-20

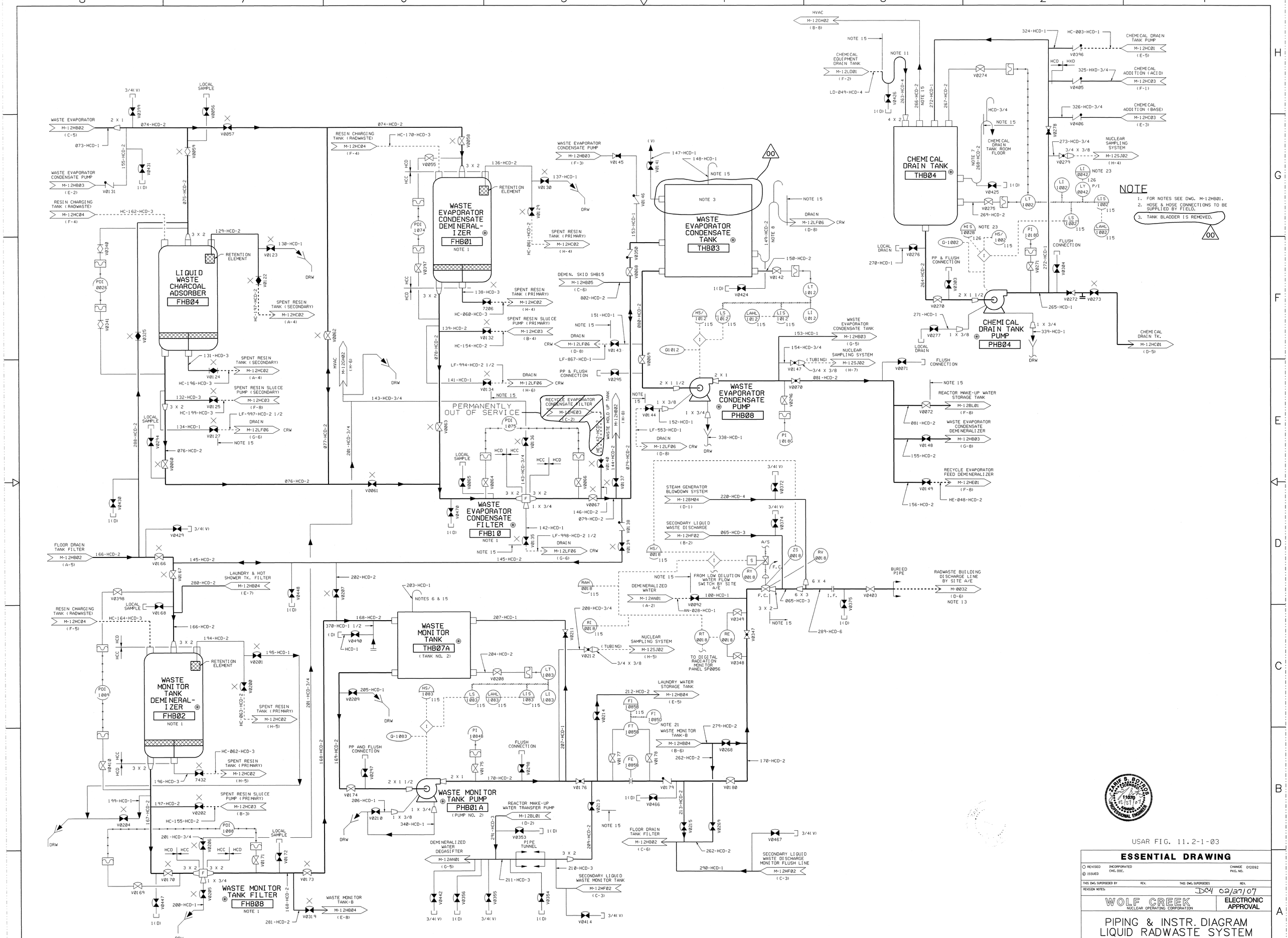

USAR FIG. 11.2-1-03

ESSENTIAL DRAWING

○ REVISED ◉ ISSUED	INCORPORATED CHG. DOC.	CHANGE PKG. NO.	012092
THIS DWG. SUPERSEDED BY	REV.	THIS DWG. SUPERSEDES	REV.
REVISION NOTES:		JC4 02/27/07	

WOLF CREEK
NUCLEAR OPERATING CORPORATION

ELECTRONIC APPROVAL

PIPING & INSTR. DIAGRAM LIQUID RADWASTE SYSTEM

SCALE	DRAWING NUMBER	SHEET	REV
NONE	WIP-M-12HB03-012-A-1		00

34X44 E SIZE

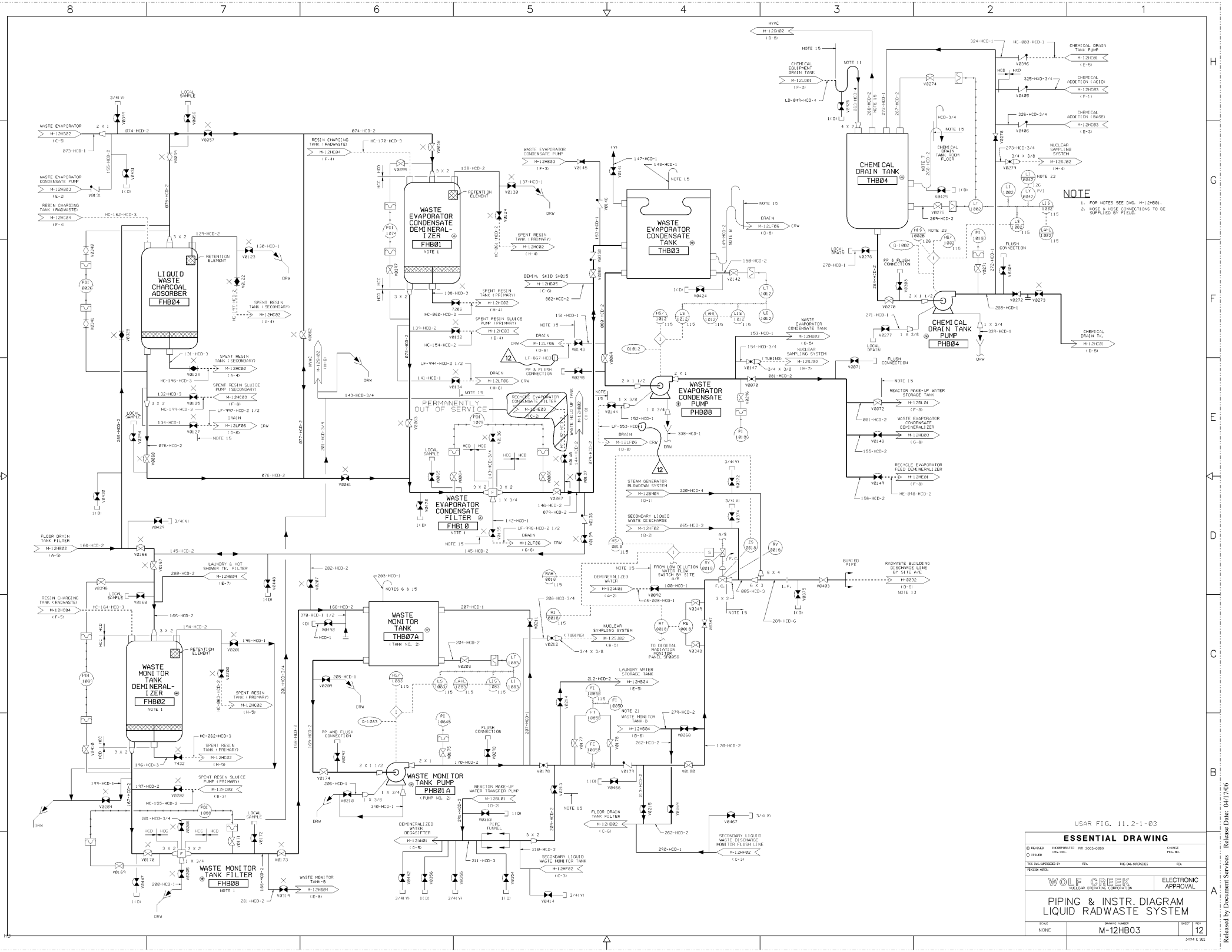

Released by Document Services Release Date: 04/17/06

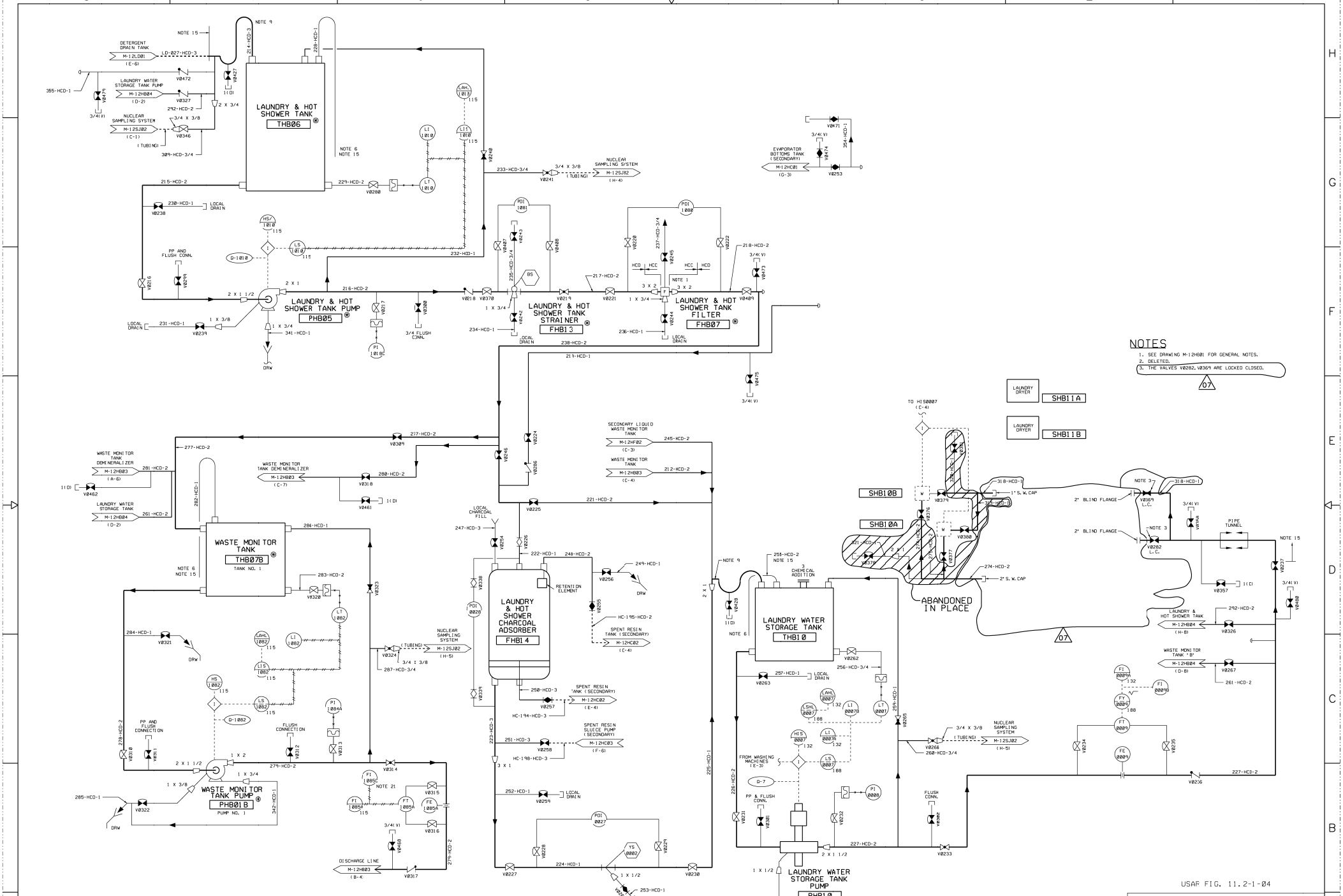
LAUNDRY & HOT SHOWER TANK
THB06
LAUNDRY & HOT SHOWER TANK PUMP
PHB05
LAUNDRY & HOT SHOWER TANK STRAINER
FHB13
LAUNDRY & HOT SHOWER TANK FILTER
FHB07
WASTE MONITOR TANK
THB07B
TANK NO. 1
WASTE MONITOR TANK PUMP
PHB01B
PUMP NO. 1
LAUNDRY & HOT SHOWER CHARCOAL ADSORBER
FHB14
LAUNDRY WATER STORAGE TANK
THB10
LAUNDRY WATER STORAGE TANK PUMP
PHB10
LAUNDRY DRYER
SHB11A
LAUNDRY DRYER
SHB11B
SHB10B
SHB10A
ABANDONED IN PLACE
NOTES
1. SEE DRAWING M-12H01 FOR GENERAL NOTES.
2. DELETED.
3. THE VALVES V0202, V0369 ARE LOCKED CLOSED.
07
USAF FIG. 11.2-1-04
ESSENTIAL DRAWING
WOLF CREEK NUCLEAR OPERATING CORPORATION
ELECTRONIC APPROVAL
PIPING AND INSTRUMENTATION DIAGRAM
LIQUID RADWASTE SYSTEM
SCALE NONE
DRAWING NUMBER M-12HB04
SHEET 1
REV 07
M-12HB04-1-07

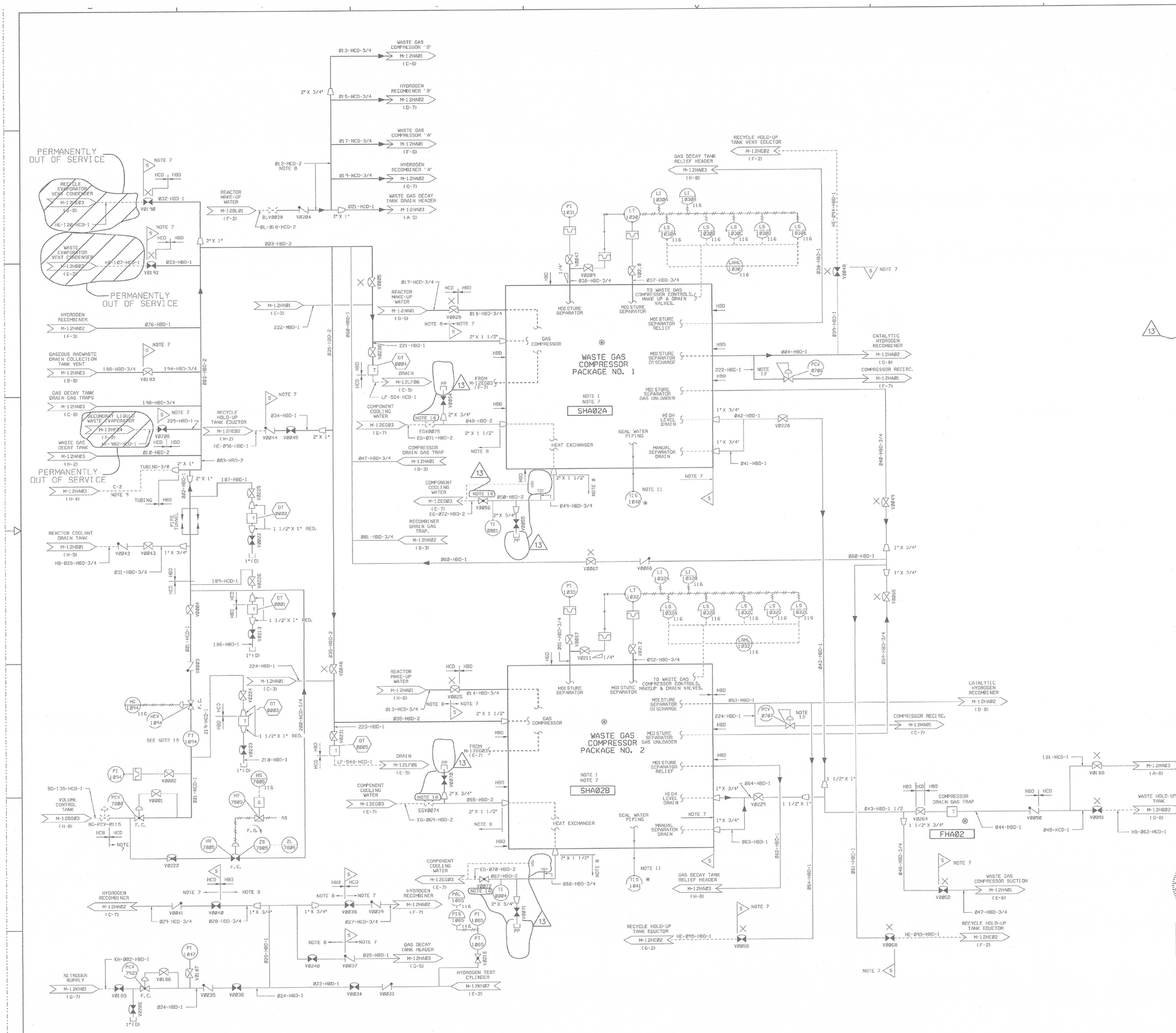

NOTES

1. SEE DRAWING NUMBER M-721-00015.
2. QUALITY GROUP 'D' PORTIONS OF THIS SYSTEM (NOT IDENTIFIED BY NOTE 8) SHALL MEET THE AUGMENTING REQUIREMENTS
3. THIS DRAWING BASED ON WESTINGHOUSE DRAWINGS M-730-00025 THROUGH M-730-00027.
4. THE FOLLOWING WESTINGHOUSE STANDARD EQUIPMENT IS SUPPLIED TO A HIGHER QUALITY GROUP/SEISMIC CLASSIFICATION AND PRINCIPLE CONSTRUCTION CODE THAN IS REQUIRED BASED ON IT'S SAFETY RELATED IMPORTANCE AS DICTATED BY SERVICE AND FUNCTIONAL REQUIREMENTS AND BY THE CONSEQUENCE OF THEIR FAILURE. EQUIPMENT CLASSIFICATION SHOWN IS FOR INTERFACE PURPOSES ONLY (I.E. WELD END PREPS). ACTUAL CLASSIFICATION OF THE EQUIPMENT IS THE LOWER CLASSIFICATION AS INDICATED FOR THE ASSOCIATED PIPING.

   A. GAS DECAY TANKS
   B. WASTE GAS DRAIN FILTER

5. SEE DRAWING NUMBER M-725-00013.
6. OXYGEN PRESSURE REGULATOR, PRESSURE INDICATORS, AND PRESSURE SWITCH, ARE PROCURED UNDER M.K. 10466-M-139. PRESSURE SWITCH ISOLATION VALVE, RELIEF VALVE, AND ORIFICE UNION ARE PROCURED AS PART OF THE WESTINGHOUSE RECOMBINER PACKAGE (M-725-038)
7. IDENTIFIED PORTIONS OF THE GASEOUS RADWASTE SYSTEM ARE ANALYZED CONSIDERING A SINGLE DEGREE OF FREEDOM.
8. INDICATED PORTIONS OF THIS SYSTEM IDENTIFIED BY THIS NOTE ARE QUALITY GROUP 'D' NON-AUGMENTED.
9. SEE INSTRUMENTATION DRAWING J-0730(X,Q)-INSTRUMENT PIPING CLASS SPECIFICATION.
10. TUBING JOINTS FOR INSTRUMENTS OFF PIPING COVERED BY NOTE 7 SHALL BE SEAL WELDED.
11. THIS INDICATING SWITCH IS REQUIRED FOR INDICATION ONLY.
12. VALVE TO BE SET TO RELIEVE AT 80 PSIG ± 10 PSIG.
13. FLANGES HAVE BEEN INSTALLED UPSTREAM AND DOWNSTREAM OF DRAIN TRAPS FHA04 AND FHA05 TO FACILITATE REMOVAL FOR MAINTENANCE.
14. DELETED.
15. ABANDONED IN PLACE.
16. IF BOTH INLET AND OUTLET HEAT EXCHANGER VALVES ARE CLOSED THEN OPEN AT LEAST ONE OF THE PP OR VENT VALVES IN-BETWEEN THEM TO RELIEVE ANY POSSIBLE THERMAL EXPANSION.

USAR FIG. 11.3-1-01

ESSENTIAL DRAWING

⊗ REVISED / ○ ISSUED	INCORPORATED CHG. DOC. — CHANGE 014803 PKG. NO.
THIS DWG. SUPERSEDES BY	REV. — THIS DWG. SUPERSEDES	REV.
REVISION NOTES: REMOVED TMO 10-17-EG-5	JCH 01-27-15

WOLF CREEK NUCLEAR OPERATING CORPORATION — ELECTRONIC APPROVAL

PIPING & INSTRUMENTATION DIAGRAM GASEOUS RADWASTE SYSTEM

SCALE	DRAWING NUMBER	SHEET	REV
NONE	M-12HA01		13

34X44 E SIZE

M-12HA01-1-13

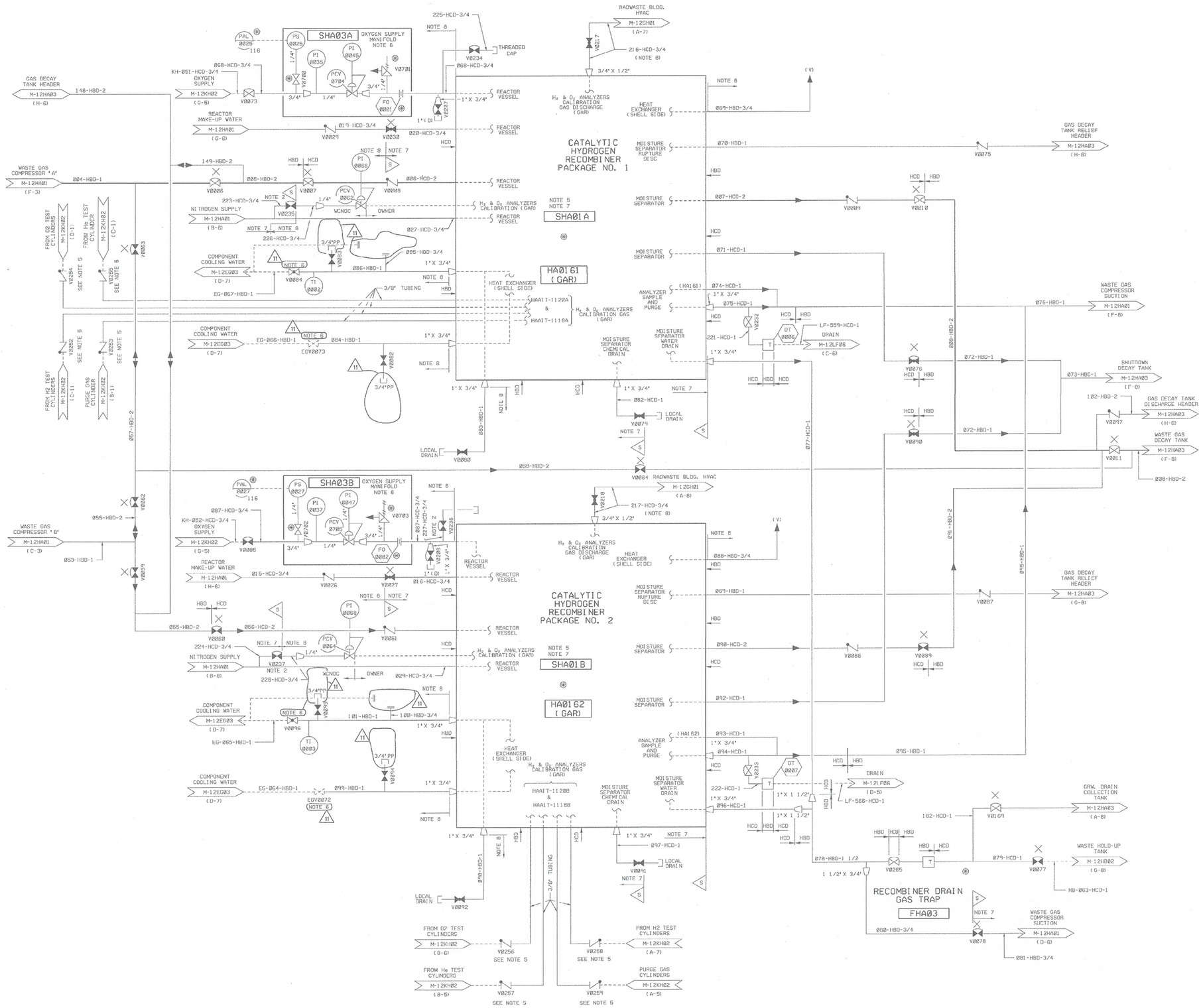

NOTES

1. FOR GENERAL NOTES, SEE DWG. M-12HA01.
2. GAS SUPPLY SHALL BE ESTABLISHED IN THE FOLLOWING LINES 027-HCD-3/4, 029-HCD-3/4, AND 087-HCD-3/4 PRIOR TO THE OPENING OF VALVES V0235, V0237, AND V0236.
3. DELETED
4. VALVES PCV-62, PCV-63, AND PCV-64 TO REGULATE PRESSURE TO THE GAS ANALYZER RACK AT 25 PSIG.
5. LOCATE CHECK VALVES AS CLOSE AS POSSIBLE TO GAS ANALYZER RACKS (HA-161 & HA-162).
6. IF BOTH INLET AND OUTLET HEAT EXCHANGER VALVES ARE CLOSED THEN OPEN AT LEAST ONE OF THE PP OR VENT VALVES IN-BETWEEN THEM TO RELIEVE ANY POSSIBLE THERMAL EXPANSION.

USAR FIG. 11.3-1-02

ESSENTIAL DRAWING

REVISED / ISSUED — INCORPORATED CHG. DOC. — CHANGE 014803 PKG. NO.

THIS DWG. SUPERSEDED BY — REV. — THIS DWG. SUPERSEDES — REV.

REVISION NOTES: REMOVED TMO 10-17-EG-5 — DCH 01-27-15

WOLF CREEK NUCLEAR OPERATING CORPORATION — ELECTRONIC APPROVAL

PIPING & INSTRUMENTATION DIAGRAM GASEOUS RADWASTE SYSTEM

SCALE	DRAWING NUMBER	SHEET	REV
N.T.S.	M-12HA02		11

24X44 E SIZE

M-12HA02-1-11

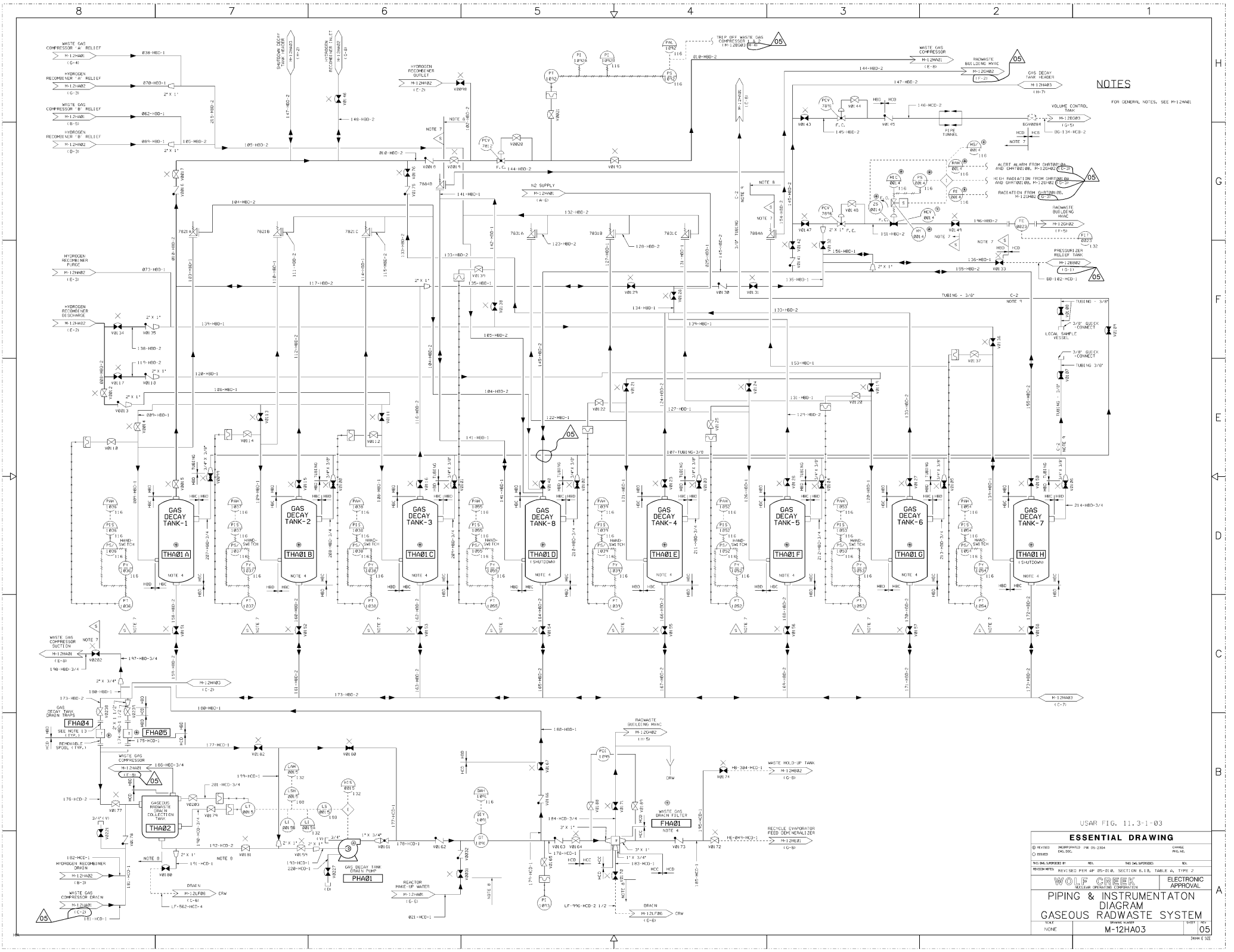

Released by Document Services Release Date: 08/12/05

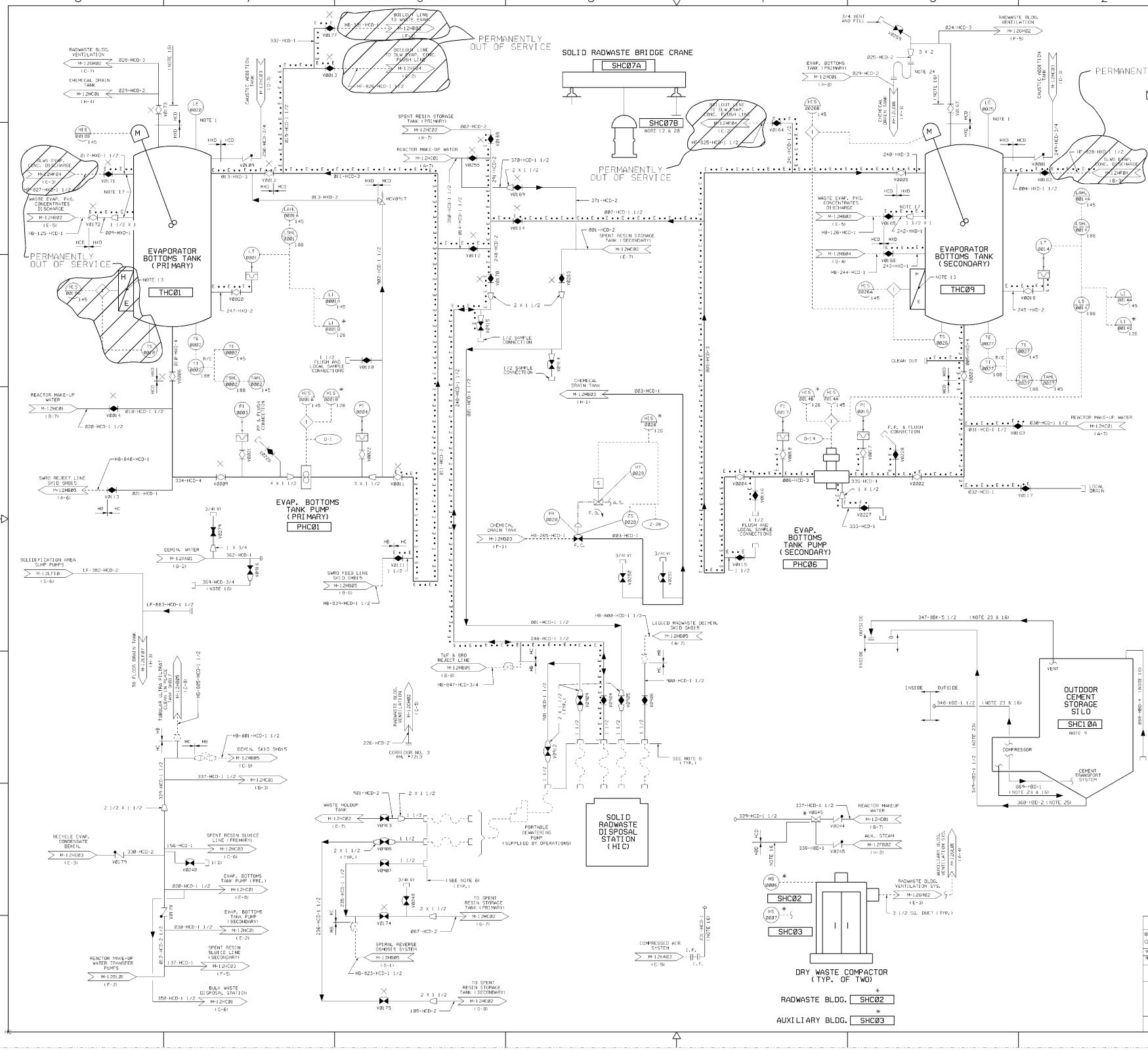

NOTES

1. ULTRASONIC LEVEL TRANSMITTER. (ABANDONED IN PLACE)
2. ALL ALARMS FOR THIS SYSTEM ARE LOCATED ON THE LOCAL CONTROL PANEL; TOTAL SYSTEM LEVEL ANNUNCIATION IS PROVIDED ON THE MAIN CONTROL BOARD.
3. PORTIONS OF THIS SYSTEM THAT CONTAIN RADIOACTIVE FLUIDS AND ARE IDENTIFIED BY QUALITY GROUP CLASSIFICATION "D" SHALL MEET THE AUGMENTING REQUIREMENTS.
4. REACTOR MAKEUP WATER SUPPLY CONNECTIONS ARE PROVIDED, ONE FOR EVERY TWO DEMINERALIZERS, TO MINIMIZE THE FLEXIBLE HOSE LENGTH REQUIRED WHEN FLUSHING THE RESIN FILL LINE.
5. THE FOLLOWING STANDARD WESTINGHOUSE EQUIPMENT IS SUPPLIED TO A HIGHER QUALITY GROUP/SEISMIC CLASSIFICATION AND PRINCIPAL CONSTRUCTION CODE THAN IS REQUIRED BASED ON ITS SAFETY-RELATED IMPORTANCE AS DICTATED BY SERVICE AND FUNCTIONAL REQUIREMENTS AND BY THE CONSEQUENCE OF THEIR FAILURE. EQUIPMENT CLASSIFICATION SHOWN IS FOR INTERFACE PURPOSES ONLY. (I.E. REQUIREMENTS FOR SEISMIC CLASSIFICATION OF EQUIPMENT BY THE POWER GROUP IS NOT AS INDICATED FOR THE ASSOCIATED PIPING.
   A. SPENT RESIN SLUICE PUMP (PRIMARY).
   B. SPENT RESIN SLUICE FILTER (PRIMARY).
   C. SPENT RESIN STORAGE TANK (PRIMARY).
6. HOSE & HOSE CONNECTIONS SUPPLIED BY THE FIELD.
7. NOZZLE TO TANGENTIALLY PENETRATE TANK.
8. OPEN TOP TANK.
9. REFER TO VENDOR P & ID. M-13S-0002.
10. DELETED.
11. CONTROL PANEL 126 IS BEING SUPPLIED WITH THE SOLID RADWASTE PACKAGE.
12. CRANE RAILS AND SUPPORT BEAMS FOR THE SOLID RADWASTE BRIDGE CRANE WILL BE SUPPLIED WITH THE SOLID RADWASTE PACKAGE.
13. EXTERNAL STRAP-ON HEATERS SUPPLIED BY THE TANK MANUFACTURER.
14. ACID ADDITION VALVES HV0045A, HV0045B, AND HV0045C, SHALL BE LOCATED IN THE VALVE COMPARTMENTS OF THE RESPECTIVE RECEIVING EQUIPMENT.
15. CAUSTIC ADDITION VALVES HV0043A, HV0043C, HV0043D, HV0047E, AND HV0043F SHALL BE LOCATED IN THE VALVE COMPARTMENTS OF THE RESPECTIVE RECEIVING EQUIPMENT.
16. INDICATED PORTIONS OF THIS SYSTEM IDENTIFIED BY THIS NOTE ARE QUALITY GROUP "D" NON-AUGMENTED.
17. INDICATED PIPING SHALL BE SELF-DRAINING FROM THE EVAPORATORS TO THE RESPECTIVE EVAPORATOR BOTTOMS TANKS.
18. DELETED.
19. DELETED.
20. CRANE, SUPPLIED AS PART OF THE SOLID RADWASTE PACKAGE, SERVICES THE HLWS AREA & LOW LEVEL STORAGE.
21. RETENTION SCREEN REQUIRED AS CLOSE TO RESIN SLUICE HEADER (LINE # 036-HCD-3) AS POSSIBLE.
22. INSTRUMENTS MARKED BY ASTERISKS ARE SUPPLIED BY THE SOLID RADWASTE PACKAGE VENDOR.
23. PIPES AND DUCTS INDICATED BY THIS NOTE ARE SUPPLIED LOOSE BY THE SOLID RADWASTE PACKAGE VENDOR TO BE INSTALLED BY THE CONSTRUCTOR IN THE FIELD.
24. LOOP SEAL TO HAVE A SHORT LEG OF 12 INCHES AND A LONG LEG OF 24 INCHES.
25. DRAIN LINE FROM 4 INCH HUB IN CEMENT STORAGE SILO COMPRESSOR ROOM CONCRETE PAD TO SITE.

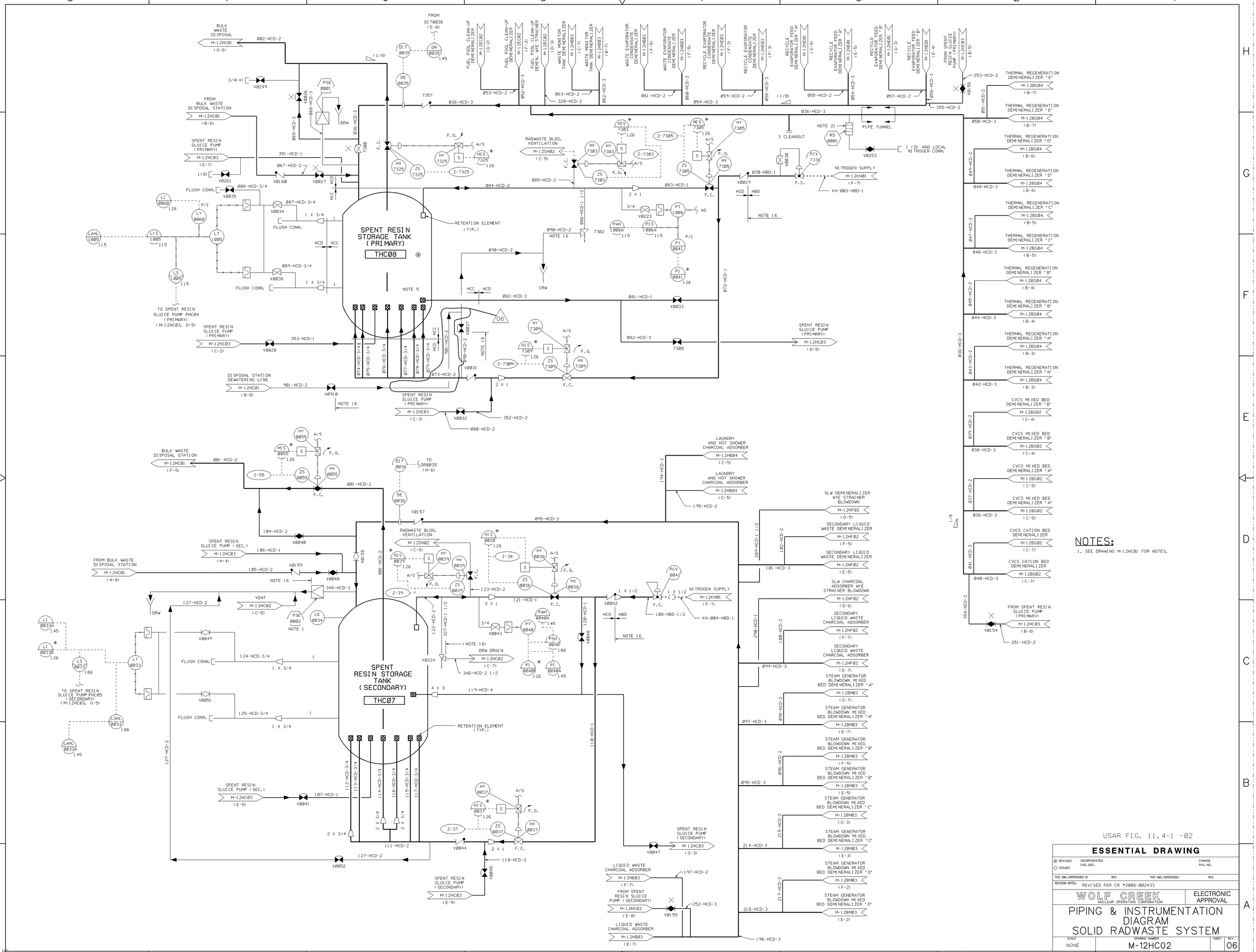

USAR FIG. 11.4-1 -02

ESSENTIAL DRAWING

REVISED / ISSUED — INCORPORATED CHG. DOC. — CHANGE PKG. NO.

THIS DWG. SUPERSEDED BY — REV. — THIS DWG. SUPERSEDES — REV.

REVISION NOTES: REVISED PER CR #2008-002433

WOLF CREEK NUCLEAR OPERATING CORPORATION

ELECTRONIC APPROVAL

PIPING & INSTRUMENTATION DIAGRAM SOLID RADWASTE SYSTEM

SCALE	DRAWING NUMBER	SHEET	REV
NONE	M-12HC02		06

34X44 E SIZE

Released by Document Services Release Date: 07/09/08

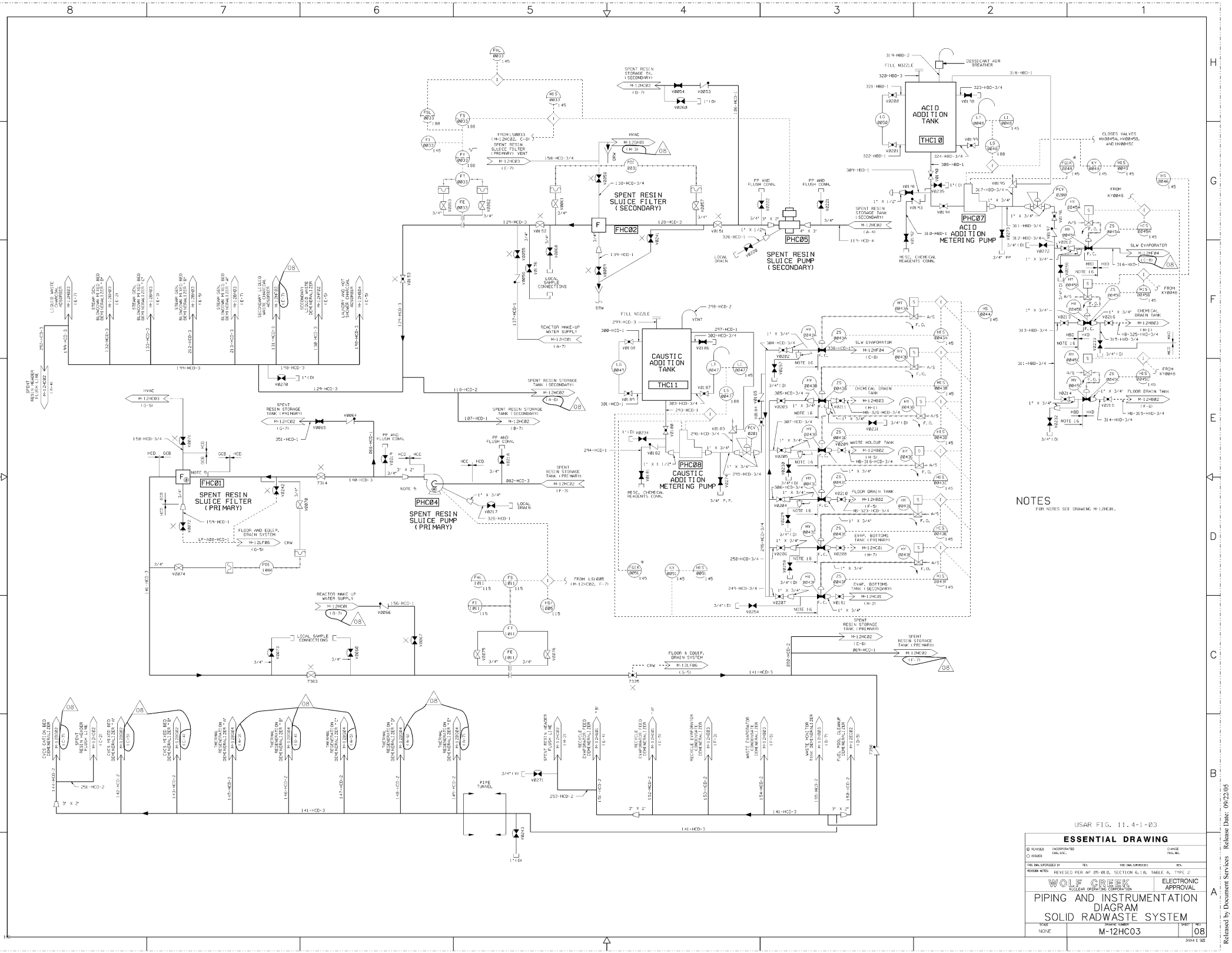
SPENT RESIN SLUICE FILTER (SECONDARY)
FHC02
SPENT RESIN SLUICE PUMP (SECONDARY)
PHC05
ACID ADDITION TANK
THC10
ACID ADDITION METERING PUMP
PHC07
CAUSTIC ADDITION TANK
THC11
CAUSTIC ADDITION METERING PUMP
PHC08
SPENT RESIN SLUICE FILTER (PRIMARY)
FHC01
SPENT RESIN SLUICE PUMP (PRIMARY)
PHC04
NOTES
FOR NOTES SEE DRAWING M-12HC01.
USAR FIG. 11.4-1-03
ESSENTIAL DRAWING
WOLF CREEK
NUCLEAR OPERATING CORPORATION
ELECTRONIC APPROVAL
PIPING AND INSTRUMENTATION DIAGRAM
SOLID RADWASTE SYSTEM
NONE
M-12HC03
08
Released by Document Services Release Date: 09/22/05

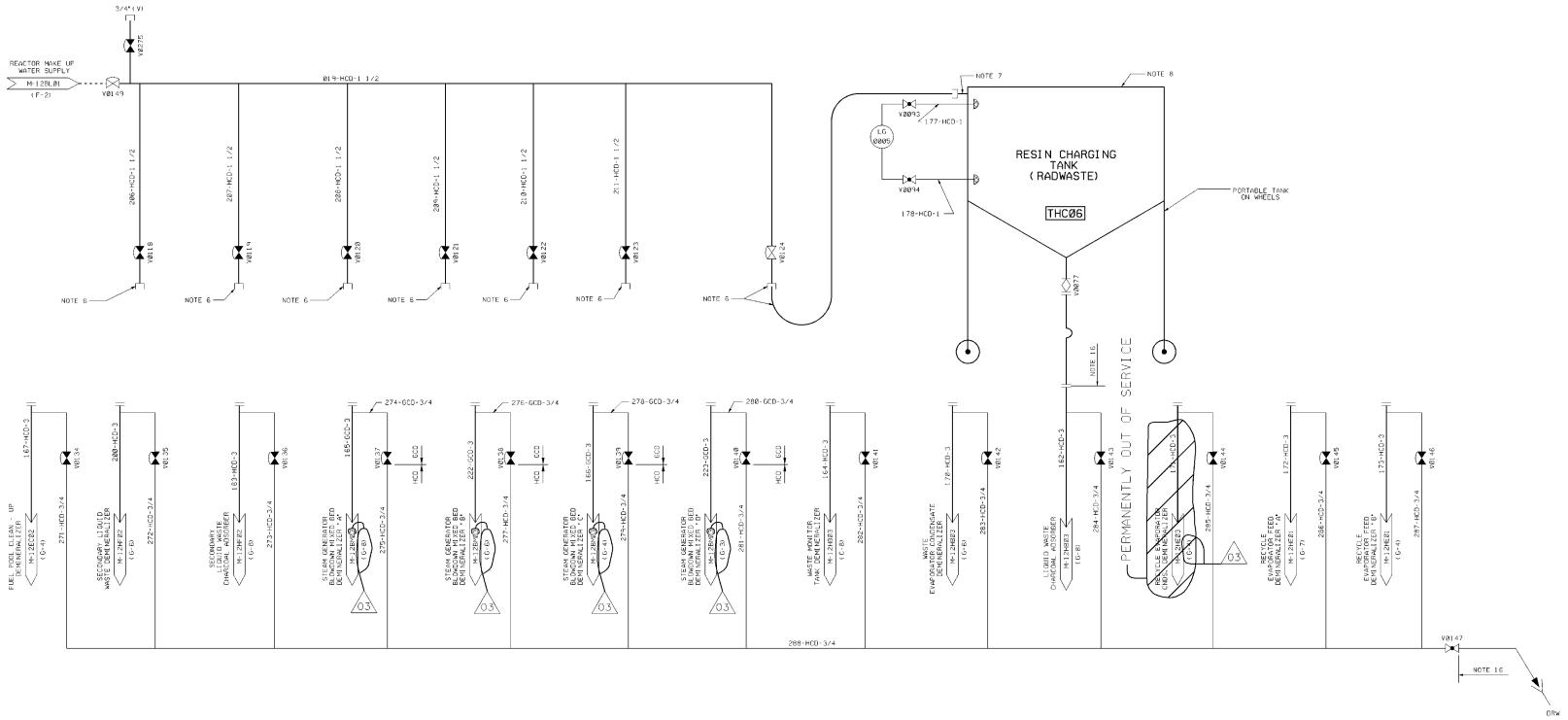

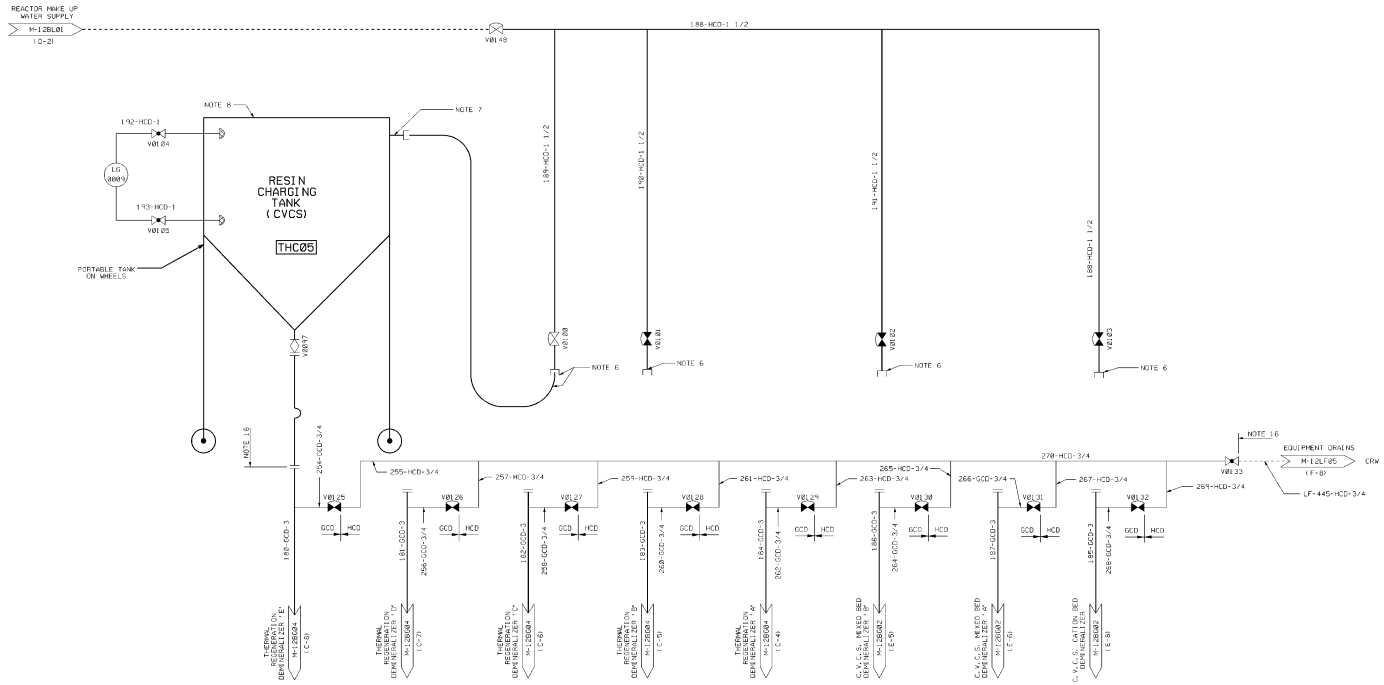

NOTES

FOR NOTES SEE DRAWING M-12HC01.

USAR FIG. 11.4-1-04

ESSENTIAL DRAWING

⊗ REVISED ○ ISSUED	INCORPORATED CHG. DOC.		CHANGE PKG. NO.
THIS DWG. SUPERSEDES BY	REV.	THIS DWG. SUPERSEDES	REV.
REVISION NOTES: REVISED PER AP 05-01.0, SECTION 6.10, TABLE A, TYPE 2			

WOLF CREEK NUCLEAR OPERATING CORPORATION

ELECTRONIC APPROVAL

PIPING AND INSTRUMENTATION DIAGRAM SOLID RADWASTE SYSTEM

SCALE	DRAWING NUMBER	SHEET	REV
	M-12HC04		03

34X44 E SIZE

Released by Document Services Release Date: 09/21/05