Examination Outline Cross-Reference	Level	RO	SRO
Rev. Date: 1/14/2015	Tier #	2	n/a
Change: 2	Group #	1	n/a
	K/A #	003K4.04	n/a
Level of Difficulty: 3	Importance Rating	2.8	n/a

Reactor Coolant Pump System: Knowledge of RCP's design feature(s) and/or interlock(s) which provide for the following: Adequate cooling of RCP motor and seals.

Question 1

Complete the following statements with regards to RCP seal injection.

1. During normal at power RCP operation, the Number 1 RCP seal receives __(1)__ gpm seal injection flow.

2. If a Safety Injection (SI) occurs, seal injection flow to the RCPs __(2)__ isolate.

A. (1) 3
(2) will

B. (1) 3
(2) will NOT

C. (1) 5
(2) will

D. (1) 5
(2) will NOT

Answer: B

The question meets the KA by requiring knowledge of the RCP design features that provide seal cooling.

Explanation / Plausibility:

A. 1st part is correct. Out of 8 gpm total seal injection flow to each RCP, 3 gpm travels up the shaft to the number 1 RCP seal and 5 gpm travels down the RCP shaft into the RCS.

   2nd part is incorrect because seal injection does not isolate if a seal injection occurs. It is plausible because when a SI does occur, it initiates a PHASE A isolation signal which does isolate RCP seal return valves. It also isolates the normal CCP injection flow path.

B. 1st part is correct (see A). 2nd part is correct.

C. 1st part is incorrect because 3 gpm flows up the RCP shaft. It is plausible because there is 8 gpm total seal injection per pump with 5 gpm traveling down the shaft and 3 gpm traveling up the shaft. 2nd part is incorrect but plausible (see A).

D. 1st part is incorrect but plausible (see C). 2nd part is correct.

Technical Reference: (Attach if not previously provided including revision number)	Lesson CVCS, Reactor Coolant	
Proposed references to be provided to applicants during examination:		None
Learning Objective:	(LO21.SYS.RC1.OB03) **DESCRIBE** the components of the Reactor Coolant system including interrelations with other systems to include interlocks and control loops.	
Question Source:	Bank #	
	Modified Bank#	
	New	X
Question History:	Last NRC Exam	
Question Cognitive Level	Memory or Fundamental Knowledge	X
	Comprehension or Analysis	
10 CFR Part 55	55.41	41.7

Content:

55.43	n/a

LO21.SYS.RC1

SEAL INJECTION FLOW

- CVCS PROVIDES SEAL INJECTION FLOW AT A SLIGHTLY HIGHER PRESSURE (~2400 PSIG) AND LOWER TEMPERATURE (~115°F) THAN THE REACTOR COOLANT.

- NORMALLY, 8 GPM IS INTRODUCED THROUGH THE THERMAL BARRIER WALL INTO THE SPACE AROUND THE PUMP RADIAL BEARING. SEAL INJECTION FLOW CONTACTS THE RCP SHAFT BELOW THE RADIAL BEARING AND ABOVE THE THERMAL BARRIER HEAT EXCHANGER.
- APPROXIMATELY 3 GPM FLOWS UP THE SHAFT, LUBRICATING THE RADIAL BEARING AND LEAKING THROUGH THE NO. 1 SEAL AND 5 GPM FLOWS DOWN THE SHAFT, THROUGH THE THERMAL BARRIER HEAT EXCHANGER, AND INTO THE RCS.

CVCS STUDY GUIDE

(LO21.SYS.CS1.OB04) **EXPLAIN** the normal, abnormal and emergency operation of the Chemical and Volume Control system.

SYSTEM RESPONSE TO A SAFETY INJECTION SIGNAL

Safety injection actuation signals are meant to cause automatic operation of equipment in response to conditions indicative of a loss of coolant accident. The overall effect on the chemical and volume control system from a safety injection signal is to align maximum charging flow from the RWST to the reactor coolant system using both CCPs and to isolate unnecessary CVCS penetrations into the containment. These actions occur in order to aid in flooding and refilling the RCS following a loss of coolant accident and to isolate the containment to contain radioactive material.

Table 8 provides component response during the actuation of safety injection and the specific initiator of that action. Two independent trains of solid state protection generate the engineered safety features signals. The specific train which causes a given component response is also identified in the table.

Table 1: Component Response to an SI Signal

EQUIPMENT NAME	ACTION	INITIATOR
Centrifugal Charging Pump u-01	Starts	Train A SI Signal
Centrifugal Charging Pump u-02	Starts	Train B SI Signal
Positive Displacement Charging Pump u-01	Bkr trips	Train A SI Signal
RWST To Chg Suction Valve u-LCV-0112D	Opens	Train A SI Signal
VCT To Chg Pump Valve u-LCV-0112B	Closes	Train A SI Signal & u-LCV-0112D Open
RWST To Chg Suction Valve u-LCV-0112E	Opens	Train B SI Signal
VCT To Chg Pump Valve u-LCV-0112C	Closes	Train B SI Signal & u-LCV-0112E Open
CCP u-01/u-02 Miniflow Valve u-8110	Closes	Train A SI Signal
CCP u-01/u-02 Miniflow Valve u-8111	Closes	Train B SI Signal
CCP Alternate Miniflow Valve u-8511A	Opens	Train A SI Signal
CCP Alternate Miniflow Valve u-8511B	Opens	Train B SI Signal

EQUIPMENT NAME	ACTION	INITIATOR
Chg To RCS Cntmt Isolation u-8106	Closes	Train A SI Signal
Chg To RCS Cntmt Isolation u-8105	Closes	Train B SI Signal
Chg Pump High Point Vent Valve u-8220	Closes	u-LCV-0112B Closed
Chg Pump High Point Vent Valve u-8221	Closes	u-LCV-0112C Closed
PDP Suct Stabilizer H2/N2 Supply u-8210A	Closes	Train A SI Signal
PDP Suct Stabilizer H2/N2 Supply u-8210B	Closes	Train B SI Signal
PDP Suct Stabilizer Upstream Vent u-8202A	Closes	Train A SI Signal
PDP Suct Stabilizer Upstream Vent u-8202B	Closes	Train B SI Signal
Letdown Isolation Valve u-LCV-0459	Closes	Train A SI Signal
Letdown Isolation Valve u-LCV-0460	Closes	Train A SI Signal
Letdown Containment Isolation Valve u-8160	Closes	Train A SI Signal
Letdown Containment Isolation Valve u-8152	Closes	Train B SI Signal
RCP Seal Water Return Isol Valve u-8112	Closes	Train A SI Signal
RCP Seal Water Return Isol Valve u-8100	Closes	Train B SI Signal
CCP SI Isolation Valve u-8801A	Opens	Train A SI Signal
CCP SI Isolation Valve u-8801B	Opens	Train B SI Signal

The suction for the charging pumps automatically realigns to the RWST. The CCP high point vent valves and the CCP miniflow isolation valves close. The alternate CCP miniflow path isolations open to align the CCP discharge to the alternate miniflow relief valves.

Both centrifugal charging pumps will start on a signal from the train related SI sequencer, if not already running. They will discharge directly into the reactor coolant system through the motor operated CCP SI Isolation Valves u-8801A and u-8801B (safety injection system valves). The normal charging header into containment isolates when the motor operated Charging Pump To RCS Isolation Valves u-8106 and u-8105 close. Seal injection flow is maintained but the amount of seal injection is now determined by the position of the CCP flow control valve, which remains in automatic responding to an error signal from the pressurizer level controller. If an actual low level condition exists in the pressurizer, as is likely during a loss of coolant event, the CCP flow control valve will be throttled open, directing some of the CCP discharge flow to the RCP seals.

The PDP will trip, load shed from its power supply by a SI signal. PDP gas supply and vent valves automatically close.

The letdown isolation valves and the containment isolation valves close, stopping letdown flow out of the containment. The letdown orifice isolation valves close on associated valve interlocks.

SI closure of letdown isolation valves was added to automatically isolate the flowpath that could exist from the RCS to the PRT through Letdown Relief u-8117.

The motor operated RCP seal water return isolation valves will close, stopping seal water return flow out of the containment. If the RCS pressure remains above 150 psig, the seal water return relief (1-8121, 2CS-8000) will lift, directing seal leakoff and excess letdown (if aligned) flow to the pressurizer relief tank.

CCW flow to the excess letdown heat exchanger is isolated on a Phase A Containment Isolation signal (which is actuated by a SI signal) when the associated CCW containment isolation valves close.

Examination Outline Cross-Reference	Level	RO	SRO
Rev. Date: 12/22/2014	Tier #	2	n/a
Change: 2	Group #	1	n/a
	K/A #	004 K5.08	n/a
Level of Difficulty: 3	Importance Rating	2.6	n/a

Chemical and Volume Control System: Knowledge of the operational implications of the following concepts as they apply to the CVCS: Estimation of subcritical multiplication factor (K-eff) by means other than the 6-factor formula: relationship of count rate changes to reactivity changes.

Question 2

Unit 1 plant conditions:

- Reactor startup in progress
- Reactor power = 10^3 cps stable (subcritical)
- A malfunction in 1-TV- 4646, LTDN HX CCW RET TEMP CTRL VLV reduces cooling water flow to the Letdown Heat Exchanger.

Based on the above conditions, complete the following statements:

1. Count rate will ____(1)____ due to the temperature change.

2. The temperature setpoint when Letdown Demineralizers will be automatically bypassed is____(2)____ °F.

   A. (1) increase
      (2) 125

   B. (1) increase
      (2) 135

   C. (1) decrease
      (2) 125

   D. (1) decrease
      (2) 135

Answer: D

The question matches the KA by requiring knowledge of how changes in the CVCS system can affect reactivity.

Explanation / Plausibility:

As water temperature increases going into the Letdown Demineralizer, the resin affinity for Boron decreases resulting in the release of boron into the coolant. This increase in boron adds negative reactivity and the resultant decrease in count rate.

A. 1st part is incorrect because count rate will decrease. It is plausible because it is a common misconception that the increase in letdown temperature will cause the boron concentration in the outlet of the demineralizer to decrease.
   2nd part is incorrect because the divert valve setpoint is 135 ^{O}F. It is plausible because it is the alarm setpoint for RCS Letdown HX outlet temperature.

B. 1st part is incorrect but plausible (see A). 2nd part is correct.

C. 1st part is correct. 2nd part is incorrect but plausible (see A).

D. 1st part is correct. 2nd part is correct.

Technical Reference: (Attach if not previously provided including revision number)	Alarm Procedure 1ALB-6A
	LO21.SYS.CS1
	CVCS Study Guide

Proposed references to be provided to applicants during examination: _____

Learning Objective: **DESCRIBE** the components of the Chemical and Volume Control system including interrelations with other systems to include interlocks and control loops. (LO21.SYS.CS1.OB03)

Question Source:	Bank #	
	Modified Bank#	
	New	X
Question History:	Last NRC Exam	
Question Cognitive Level	Memory or Fundamental Knowledge	
	Comprehension or Analysis	X
10 CFR Part 55 Content:	55.41	41.5

55.43	n/a

LO21.SYS.CS1

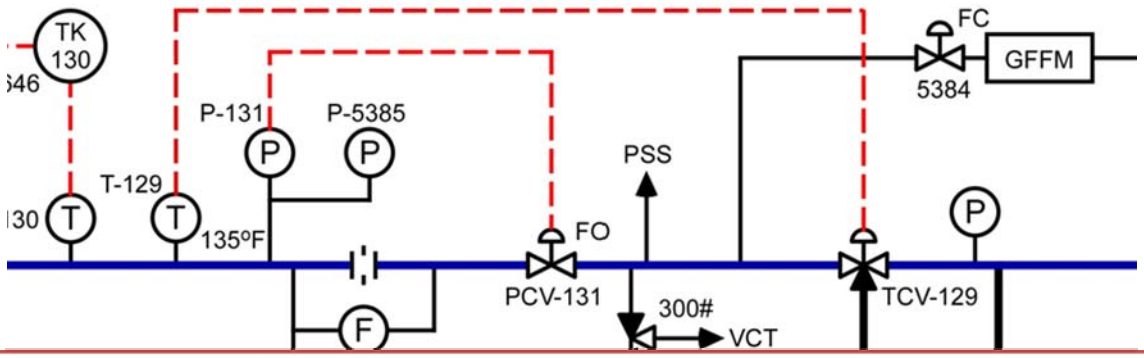

u-TCV-129, LETDOWN HIGH TEMP DIVERSION VALVE

- **Auxiliary Building Upper Valve Gallery 842 ft elevation**
- **Automatically diverts letdown flow to the VCT, bypassing the letdown demins on high temperature conditions to protect the ion exchanger resin**.
- Three way, air operated valve
- Controlled from a three position (VCT-AUTO-DEMIN) switch on CB 06.
- **≥ 135°F on TIS-129 or ≥ 155°F** on TIS-382, TCV-129 will divert to the VCT.
- On loss of air or control power, **TCV-129 will position to divert flow to the VCT.**

ANNUNCIATOR NO.: **1.3**

LOGIC:

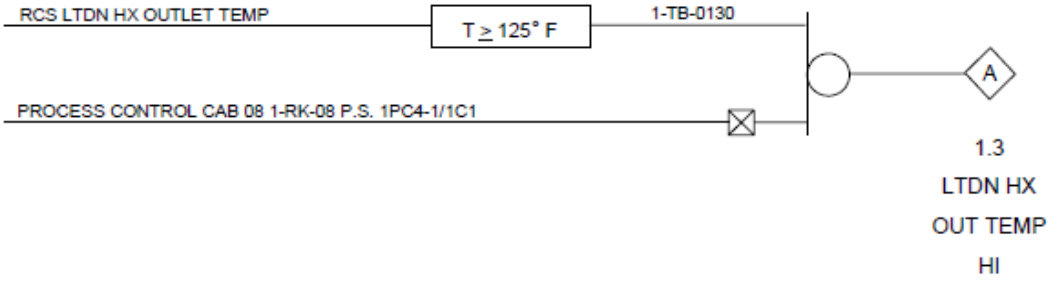

PLANT COMPUTER:

T0145A LTDN HX OUT TEMP

LOCAL INSTRUMENTS:

1-FIS-4606 CVCS LTDN HX OUTLET TO CCW RETURN FLOW
1-TI-4626 LTDN HX OUT TO CCW RET

REFERENCES:

M1-0254		E1-0061	Sh.90
8758D39	Sh.52	8760D65	Sh.24

CVCS STUDY GUIDE

REACTOR COOLANT SYSTEM CHEMISTRY CONTROL

Plant chemistry group monitors RCS chemistry by periodically analyzing coolant samples. They determine needed adjustments to all chemical parameters except boron concentration, which is adjusted to maintain temperature.

Technical Specifications limits exist for RCS concentrations of dissolved oxygen, chlorides and fluorides in the TRM. RCS oxygen concentration is controlled to minimize corrosion. During power operation oxygen is controlled by maintaining a concentration of hydrogen in solution. VCT pressure is varied as recommended, normally approximately 25 psig, to adjust this concentration. 13.7 psig corresponds to a hydrogen concentration of 25 cc/kg. A pressure of 25 psig in the VCT corresponds to 35 cc/kg.

Non-condensables, such as radioactive gases, are removed periodically (usually weekly) by conducting a purge of the VCT gas space to the gaseous waste system. An extended purge is performed on the VCT prior to shutdown for maintenance to reduce RCS activity levels.

During a shutdown for maintenance, a degasification is performed after the reactor shutdown to reduce the concentration of hydrogen (which is combustible) in solution. The pressurizer steam space sample point is aligned to the VCT through the sample recirculation path. Nitrogen is aligned to the VCT and the PDP suction stabilizer at 11 psig. The VCT vent valve (u-PCV-0115) auto close low pressure setpoint is reduced to 10 psig and the valve is opened to the gaseous waste system. VCT level is slowly raised to 95% and held there for an hour. Then VCT level is slowly reduced to 50% and held there for an hour. The level is shifted back and forth between these two levels, while maintaining nitrogen pressure between 11 and 15 psig until the RCS hydrogen concentration has dropped to the desired value. The degasification process is stopped by closing the VCT vent valve; raising nitrogen pressure to 18 psig and resetting the VCT vent valve auto close low pressure setpoint to 14 psig. During degasification, VCT pressure is maintained as low as possible (but above 10 psig for seal concerns) in order to ensure the maximum reduction in hydrogen concentration. At lower pressure, less gas remains in solution.

Chemical additions to the RCS are made using the reactor makeup system. Chemicals are added to the chemical addition tank and then directed, using the reactor makeup system, into the charging suction line.

The effectiveness of chemical and volume control system ion exchangers is determined periodically by analyzing samples from the ion exchanger inlet and outlet streams. The sample activities are used to calculate a decontamination factor. A resin bed is replaced based on Chemistry Group recommendations. Replacement is performed on a periodic basis to avoid running to breakthrough conditions. Demineralizers can affect the boron concentration of the reactor coolant system by adsorbing or releasing boron as water passes through them. When placing a demineralizer in service, it must be flushed to saturate the resin with boron. It is placed in service after flushing and sampling to ensure that the resin is not changing the boron concentration of the fluid passing through it. **An inadvertent change in reactivity could result from placing an ion exchanger in service prior to saturating the resin with boron.**

Boric acid is a weak acid which occurs in varied ionic forms. The most important forms are the monoborate [$B(OH)_3$] and triborate [$B_3(OH)_{10}$] ions. The existence of these forms is affected by temperature, initial overall boron concentration and, to a small extent, pH. When a resin bed is initially saturated, either a mono-borate or tri-borate ion can take the place of an OH^- resin site.

The relative concentration of mono and tri-borate ions in solution changes as letdown temperature is changed. If letdown temperature decreases, the boric acid in solution tends to form more of the tri-borate ions. When these ions approach an anion resin site holding a mono-borate ion, the two ions exchange since the tri-borate ions are at a higher concentration. This results in a dilution of boron from the reactor coolant system. Similarly, if letdown temperature increases, more mono-borate ions are formed and the resin will release tri-borate ions in exchange for mono-borate ions, resulting in a boration of the reactor coolant system.

The resulting effect from raising letdown temperature is easily remembered by recognizing that it has the same reactivity effect on the core as raising the temperature of the reactor coolant system when operating at full reactor power. If coolant temperature is raised, the change in temperature adds negative reactivity to the core. Likewise, if letdown temperature is raised, the resulting change in boron concentration out of the letdown mixed bed ion exchanger will add negative reactivity to the core.

Examination Outline Cross-Reference	Level	RO	SRO
Rev. Date: 12/22/2014	Tier #	2	n/a
Change: 1	Group #	1	n/a
	K/A #	005 K5.01	n/a
Level of Difficulty: 3	Importance Rating	2.9	n/a

Residual Heat Removal System: Knowledge of the operational implications of the following concepts as they apply the RHRS: Nil ductility transition temperature (brittle fracture)

Question 3

Complete the following statements regarding RHR system relief valves with RHR in shutdown cooling operation.

1. ____(1)____ relief valves <u>are</u> allowed to be substituted for PRZR PORVs for LTOP protection.

2. With RCS pressure at 435 psig, these relief valves should be ___(2)____.

   A. (1) RHR pump suction
      (2) open

   B. (1) RHR pump suction
      (2) closed

   C. (1) RHR Cold Leg Injection
      (2) open

   D. (1) RHR Cold Leg Injection
      (2) closed

Answer: B

This question matches the KA because it requires knowledge of how the RHR system can be used for LTOP in order to mitigate pressure transients that could lead to brittle fracture.

Explanation / Plausibility:

RHR pump suction relief valves are set to relive at 450 psig as opposed to the low pressure LTOP setpoint of 425 psig or the RHR Cold Leg Injection setpoint of 600 psig.

A. 1st part is correct. The RHR pump suction relief IS allowed to be substituted for a PRZR PORV for LTOP protection on a one for one basis.
   2nd part is incorrect because the setpoint for the RHR pump suction relief is 450 psig. It is plausible because the PORV setpoint is 425 psig and if in service, the PORV would be open.

B. 1st part is correct. 2nd part is correct.

C. 1st part is incorrect because they are not allowed to be substituted for the PORV for LTOP protection. It is plausible because it is a relief valve in the RHR system piping.
   2nd part is incorrect but plausible (see A).

D. 1st part is incorrect but plausible (see C). 2nd part is correct.

Technical Reference: (Attach if not previously provided including revision number) Residual Heat Removal Study Guide

Proposed references to be provided to applicants during examination: _____

Learning Objective: **DESCRIBE** the components of the Residual Heat Removal system including interrelations with other systems to include interlocks and control loops. (LO21.SYS.RH1.OB03)

Question Source:	Bank #	
	Modified Bank#	
	New	X
Question History:	Last NRC Exam	
Question Cognitive Level	Memory or Fundamental Knowledge	X
	Comprehension or Analysis	
10 CFR Part 55 Content:	55.41	41.5

RESIDUAL HEAT REMOVAL SYSTEM STUDY GUIDE

RHR PUMP SUCTION RELIEF VALVES (U-8708A&B)

The RHR System is designed for 600psig, thus when the RCS Hot Leg Recirculation Isolation Valves are open, the RHR System requires overpressure protection. The RHR Pump Suction Relief Valves have a design capacity of 900 gpm and discharge to the Pressurizer Relief Tank.

The relief setpoint is 450 psig and relief capacity requirements are calculated based on 2 analyzed situations:

- A loss of Instrument Air occurs just after one train of RHR is connected to the Reactor Coolant System. One Centrifugal Charging Pump is operating. As a result of the loss of Instrument Air, the Charging Flow Control Valve (u-FCV-121) fails open and the RHR Letdown Flow Control Valve (HCV-0128) fails closed. To prevent the over pressurization of the RHR System, the relief valve is required to relieve 475 gpm at 375°F.
- A loss of Instrument Air occurs during cold shutdown or refueling operations with one train of RHR connected to the Reactor Coolant System. The analysis conservatively assumes both Centrifugal Charging Pumps are operating since we spend extended time periods in this mode. As a result of the loss of Instrument Air, the Charging Flow Control Valve (u-FCV-121) fails open and the RHR Letdown Flow Control Valve (u-HCV-0128) fails closed. To prevent the over pressurization of the RHR System, the relief valve is required to relieve 770 gpm at 200°F.

Spurious SI pump operation is not considered in this calculation because the pumps are administratively locked out in Modes 4-6.

These valves are considered containment isolation valves because they are connected to the RHR suction line that is a part of a containment penetration.

Note that the relief valves also provide some pressure relief capacity to protect the RCS, especially when the plant is solid. In fact, Technical Specifications allow the RHR reliefs to substitute for one or both of the PORVs in the Low Temperature Overpressure Protection (LTOP) system.

RHR COLD LEG INJECTION RELIEF VALVE (U-8856A&B)

The RHR Cold Leg Injection Relief Valves provide overpressure protection from the effects of slow thermal expansion of fluid trapped within the lines they protect. This condition could result from stopping flow during LOCA conditions when the RHR system would contain radioactive materials that would generate heat as they decay. The leg of piping bounded by the discharge check valve (downstream of the Flow Control Valve), u-8716A/B and u-8809A/B would be trapped, and as the temperature increases, the pressure would increase. This pressure increase could rupture piping if not relieved.

The relief valves also protect against the leakage of the Reactor Coolant System water past the check valves located upstream of the RHR System injection point. These valves are set to open when pressure reaches 600psig and have the capacity to relieve 20 gpm to the Recycle Holdup Tank.

RESIDUAL HEAT REMOVAL SYSTEM
(Shutdown Cooling Mode)

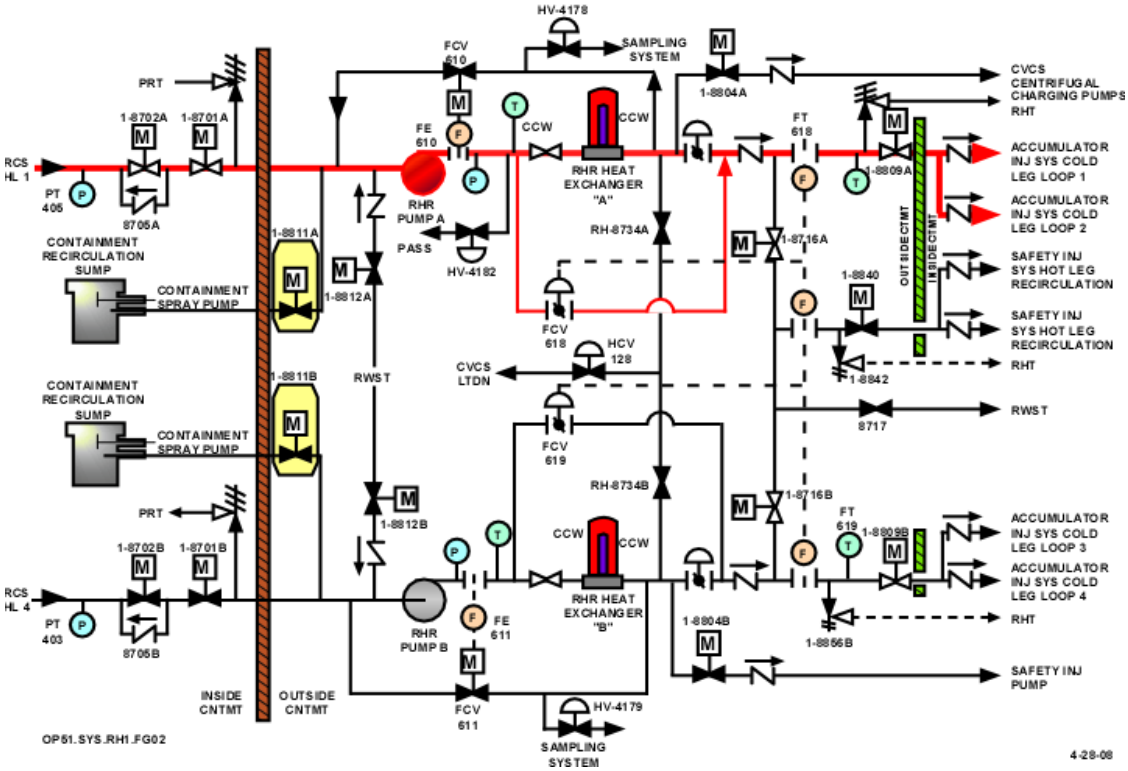

3.4 REACTOR COOLANT SYSTEM (RCS)

3.4.12 Low Temperature Overpressure Protection (LTOP) System

LCO 3.4.12 An LTOP System shall be OPERABLE with a maximum of zero safety injection pumps and two charging pumps capable of injecting into the RCS and the accumulators isolated and one of the following pressure relief capabilities:

a. Two power operated relief valves (PORVs) with lift settings within the limits specified in the PTLR, or

b. Two residual heat removal (RHR) suction relief valves with setpoints ≥ 436.5 psig and ≤ 463.5 psig, or

c. One PORV with a lift setting within the limits specified in the PTLR and one RHR suction relief valve with a setpoint ≥ 436.5 psig and ≤ 463.5 psig, or

d. The RCS depressurized and an RCS vent of ≥ 2.98 square inches.

----------NOTE----------
Accumulator may be unisolated when accumulator pressure is less than the maximum RCS pressure for the existing RCS cold leg temperature allowed by the P/T limit curves provided in the PTLR.

APPLICABILITY: MODE 4, MODE 5,
MODE 6 when the reactor vessel head is on

----------NOTE----------
The LCO is not applicable when all RCS cold leg temperatures are > 320°F and the following conditions are met:

a. At least one reactor coolant pump is in operation, and

b. Pressurizer level is ≤ 92%, and

c. The plant heatup rate is limited to 60°F in any one hour period.

Examination Outline Cross-Reference	Level	RO	SRO
Rev. Date: 12/22/2014	Tier #	2	n/a
Change: 1	Group #	1	n/a
	K/A #	005 A1.03	n/a
Level of Difficulty: 3	Importance Rating	2.5	n/a

Residual Heat Removal System: Ability to predict and/or monitor changes in parameters (to prevent exceeding design limits) associated with operating the RHRS controls including: Closed cooling water flow rate and temperature.

Question 4

On Unit 2 during a design basis LOCA, which ONE of the following correctly describes how the CCW to RHR Heat Exchanger isolation valves will be positioned in order to prevent exceeding the CCW system design temperature during a design basis LOCA? (Assume all automatic valve movements are complete).

A. CCW Inlet Isolation valves 2CC-0109 and 2CC-0157 are closed and CCW Outlet Isolation valves 2-HV-4572 and 2-HV-4573 are full open.

B. CCW Inlet Isolation valves 2CC-0109 and 2CC-0157 are throttled to 40% open and CCW Outlet Isolation valves 2-HV-4572 and 2-HV-4573 are 40% open.

C. CCW Inlet Isolation valves 2CC-0109 and 2CC-0157 are closed and CCW Outlet Isolation valves 2-HV-4572 and 2-HV-4573 are 40% open.

D. CCW Inlet Isolation valves 2CC-0109 and 2CC-0157 are throttled to 40% open and CCW Outlet Isolation valves 2-HV-4572 and 2-HV-4573 are full open.

Answer: C

This question matches the KA because it requires knowledge of how CCW valves associated with the RHR heat exchanger are operated to control CCW flow (to prevent exceeding system limits during the DBA LOCA).

Explanation / Plausibility:

The inlet isolation valves are normally sealed closed and stay closed during an SI. They have orifices drilled in them which allows sufficient flow during a DB LOCA when coupled with the outlet isolation valve being 40% open.

A. Inlet Isolation valve position is correct. Outlet Isolation valve position is incorrect but plausible because the outlet isolation valves do travel to the full open position, but then throttle down to 40% open automatically. The question states “after automatic valve movement is complete”.

B. Inlet isolation valve position is incorrect but plausible because the final Outlet Isolation valve position is 40%. Outlet Isolation valve position is correct.

C. Correct.

D. Inlet isolation valve position is incorrect but plausible because the final Outlet Isolation valve position is 40%. Outlet Isolation valve position is incorrect but plausible because the outlet isolation valves do travel to the full open position, but then throttle down to 40% open automatically. The question states “after automatic valve movement is complete”.

Technical Reference: (Attach if not previously provided including revision number)

LO21.SYS.CC1

Component Cooling Water Study Guide

Proposed references to be provided to applicants during examination:

Learning Objective: **EXPLAIN** the normal, abnormal and emergency operation of

the Component Cooling Water system.
(LO21.SYS.CC1.OB05)

Question Source:	Bank #		
	Modified Bank#		
	New	X	
Question History:	Last NRC Exam		
Question Cognitive Level	Memory or Fundamental Knowledge		X
	Comprehension or Analysis		
10 CFR Part 55 Content:	55.41	41.5	
	55.43	n/a	

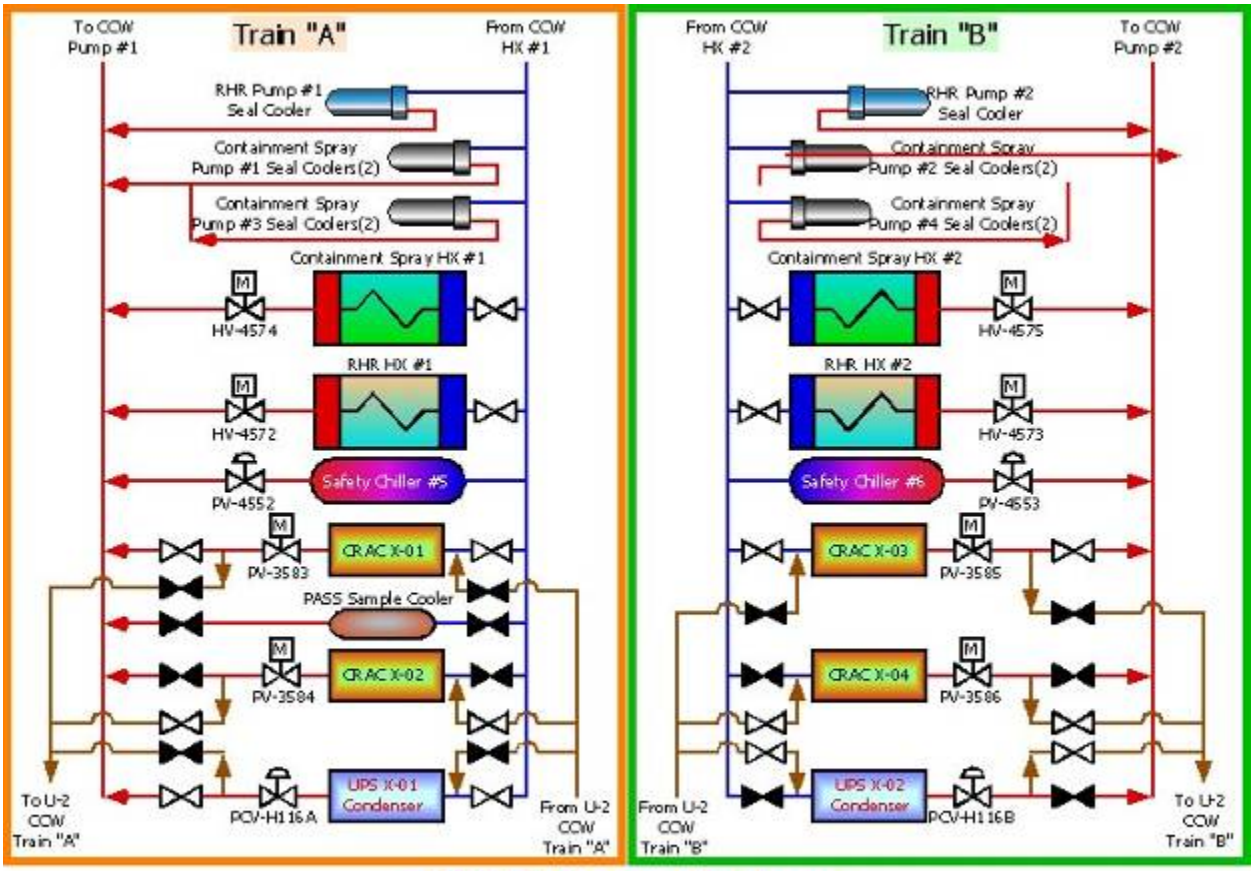

CCW Safeguards Loop

OPS1.SYS.CC1.FG02

RHR Heat Exchanger

CCW is supplied to the RHR heat exchangers to cool the water before it goes to the reactor vessel to cool the core. This allows the RHR system to be used for cooling the plant following a normal reactor shutdown. The decay heat is transferred to the CCW system and then to SSW as the ultimate heat sink. Following a loss of coolant accident after the RWST has been pumped into the reactor, the RHR pump suction automatically shifts to the containment sumps. This water will be hot as it has been through the vessel and picked up heat from the core. It is necessary for CCW to cool the RHR system to maintain the core cool, when the source may be the containment sumps.

The RHR heat exchangers have motor operated butterfly valves on the outlet of each heat exchanger powered from train related 1E 480v MCCs with control power supplied from a 480V to 120V transformer in each valve's breaker compartment. The valves are controlled from a hand switch on u-CB-03. The hand switch is configured such that the valve moves only when the switch is being held in the open or close position. There is open/close indication on the hand switch and indication on u-MLB-4A3 and u-MLB-4B3 when the valve is in the throttled position for Safety Injection or spray actuation. There is also a blue light on the hand switch that is lit when the valve is in the throttled position for 40% design flow.

The upstream isolation valves for the RHR heat exchangers, uCC-0109 and uCC-0157, have been modified to act as orifices and can not be used for system isolation. This design allows only the 40% design flow to the heat exchangers. These manual valves are normally sealed closed to provide acceptable CCW flow balancing for a DBA to limit heat addition to the CCW system. These valves are not required to be opened to mitigate a DBA (e.g. LOCA); however, they may be opened to accelerate cooldown after accident heat loads have sufficiently decayed that the plant and systems conditions will support full CCW flow without exceeding the limiting CCW operating temperature of 135°F at the exit of the CCW heat exchanger and if the valve locations are accessible (corridor may be high radiation area following LOCA). These valves provide a flow limiting function in Modes 1, 2, and 3 and may be opened in Mode 3 below 400°F to aid in cooldown. The valves may be opened as needed to support RHR cooldown in Modes 4, 5 and 6.

On a safety injection actuation signal the heat exchanger valves will travel full open and, then close to a pre-set position which corresponds to 40% design flow through the heat exchangers, nominal 3140 gpm. If SI has been reset and the position of the valves changed and a containment spray signal follows, the valves will automatically reposition to the throttled position equivalent to 40% design flow.

A flow element on the outlet of the heat exchanger provides flow indication on the main control board and generates a low flow alarm at less than 2500 gpm flow. The flow alarm is interlocked with the valve position such that the valve has to be greater than 20% open with low flow before the alarm is enabled. The flow element also provides a signal for flow from the RHR heat exchanger to the plant computer.

Examination Outline Cross-Reference	Level	RO	SRO
Rev. Date: 12/22/2014	Tier #	2	n/a
Change: 1	Group #	1	n/a
	K/A #	006 K1.08	n/a
Level of Difficulty:	Importance Rating	3.6	n/a

Emergency Core Cooling System: Knowledge of the physical connections and/or cause-effect relationships between the ECCS and the following systems: CVCS

Question 5

Unit 1 plant conditions:

- Reactor power = 100%
- CCP 1-01 is operating
- SBLOCA occurs
- RCS pressure = 1700 psig decreasing
- SI Train A failed to actuate

Based on the above conditions, complete the following statements with regards to the Chemical & Volume Control System:

1. CCP 1-01 ____(1)____ be operating with it suction from the RWST.

2. RCP seal return will be directed to the ___(2)____.

A. (1) will
(2) VCT

B. (1) will
(2) PRT

C. (1) will NOT
(2) VCT

D. (1) will NOT
(2) PRT

Answer: B

This question matches the KA because it requires knowledge of how an ECCS initiation affects various equipment in the CVCC system.

Explanation / Plausibility:

When an SI occurs, the CCP suction valves from the RWST open. These valves are in parallel so only one valve needs to open in order to provide a flow path to the CCP pumps. The CCP suction valves from the VCT will close ONLY after their respective (train) RWST suction valve is open. The VCT suction valves are in series so that either valve closing will isolate the VCT from the CCPs. The RCP seal return containment isolation valves will close. These valves are in series so either isolation valve will isolate the flow path. A relief valve will open, allowing the seal return water to flow to the PRT.

A. 1st part is correct. 2nd part is incorrect because seal return will isolate when the SI signal causes a Phase A isolation. It is plausible to think that RCP seal return does NOT isolate because RCP seal injection does NOT isolate.

B. 1st part is correct. 2nd part is correct. When seal return isolates, a relief valve will lift. This relief valve discharges to the PRT.

C. 1st part is incorrect because CCP suction will be aligned to the RWST. It is plausible because: Train A didn't initiate and CCP u-01 is a train A pump / train A suction valves did not realign to the RWST. 2nd part is incorrect but plausible (see A).

D. 1st part is incorrect but plausible (see C). 2nd part is correct.

Technical Reference: (Attach if not previously provided including revision number) CVCS Study Guide

Proposed references to be provided to applicants during examination: _____

Learning Objective: **EXPLAIN** the normal, abnormal and emergency operation of the Chemical and Volume Control system. (LO21.SYS.CS1.OB04)

Question Source: Bank # _____
Modified Bank# _____
New X

Question History: Last NRC Exam _____

Question Cognitive Memory or Fundamental Knowledge _____

Level	Comprehension or Analysis		X
10 CFR Part 55 Content:	55.41	41.2 to 41.9	
	55.43	n/a	

CVCS STUDY GUIDE

(LO21.SYS.CS1.OB04) **EXPLAIN** the normal, abnormal and emergency operation of the Chemical and Volume Control system.

SYSTEM RESPONSE TO A SAFETY INJECTION SIGNAL

Safety injection actuation signals are meant to cause automatic operation of equipment in response to conditions indicative of a loss of coolant accident. The overall effect on the chemical and volume control system from a safety injection signal is to align maximum charging flow from the RWST to the reactor coolant system using both CCPs and to isolate unnecessary CVCS penetrations into the containment. These actions occur in order to aid in flooding and refilling the RCS following a loss of coolant accident and to isolate the containment to contain radioactive material.

Table 8 provides component response during the actuation of safety injection and the specific initiator of that action. Two independent trains of solid state protection generate the engineered safety features signals. The specific train which causes a given component response is also identified in the table.

Table 2: Component Response to an SI Signal

EQUIPMENT NAME	ACTION	INITIATOR
Centrifugal Charging Pump u-01	Starts	Train A SI Signal
Centrifugal Charging Pump u-02	Starts	Train B SI Signal
Positive Displacement Charging Pump u-01	Bkr trips	Train A SI Signal
RWST To Chg Suction Valve u-LCV-0112D	Opens	Train A SI Signal
VCT To Chg Pump Valve u-LCV-0112B	Closes	Train A SI Signal & u-LCV-0112D Open
RWST To Chg Suction Valve u-LCV-0112E	Opens	Train B SI Signal
VCT To Chg Pump Valve u-LCV-0112C	Closes	Train B SI Signal & u-LCV-0112E Open
CCP u-01/u-02 Miniflow Valve u-8110	Closes	Train A SI Signal
CCP u-01/u-02 Miniflow Valve u-8111	Closes	Train B SI Signal
CCP Alternate Miniflow Valve u-8511A	Opens	Train A SI Signal
CCP Alternate Miniflow Valve u-8511B	Opens	Train B SI Signal

EQUIPMENT NAME	ACTION	INITIATOR
Chg To RCS Cntmt Isolation u-8106	Closes	Train A SI Signal
Chg To RCS Cntmt Isolation u-8105	Closes	Train B SI Signal
Chg Pump High Point Vent Valve u-8220	Closes	u-LCV-0112B Closed
Chg Pump High Point Vent Valve u-8221	Closes	u-LCV-0112C Closed
PDP Suct Stabilizer H2/N2 Supply u-8210A	Closes	Train A SI Signal
PDP Suct Stabilizer H2/N2 Supply u-8210B	Closes	Train B SI Signal
PDP Suct Stabilizer Upstream Vent u-8202A	Closes	Train A SI Signal
PDP Suct Stabilizer Upstream Vent u-8202B	Closes	Train B SI Signal
Letdown Isolation Valve u-LCV-0459	Closes	Train A SI Signal
Letdown Isolation Valve u-LCV-0460	Closes	Train A SI Signal
Letdown Containment Isolation Valve u-8160	Closes	Train A SI Signal
Letdown Containment Isolation Valve u-8152	Closes	Train B SI Signal
RCP Seal Water Return Isol Valve u-8112	Closes	Train A SI Signal
RCP Seal Water Return Isol Valve u-8100	Closes	Train B SI Signal
CCP SI Isolation Valve u-8801A	Opens	Train A SI Signal
CCP SI Isolation Valve u-8801B	Opens	Train B SI Signal

The suction for the charging pumps automatically realigns to the RWST. The CCP high point vent valves and the CCP miniflow isolation valves close. The alternate CCP miniflow path isolations open to align the CCP discharge to the alternate miniflow relief valves.

Both centrifugal charging pumps will start on a signal from the train related SI sequencer, if not already running. They will discharge directly into the reactor coolant system through the motor operated CCP SI Isolation Valves u-8801A and u-8801B (safety injection system valves). The normal charging header into containment isolates when the motor operated Charging Pump To RCS Isolation Valves u-8106 and u-8105 close. Seal injection flow is maintained but the amount of seal injection is now determined by the position of the CCP flow control valve, which remains in automatic responding to an error signal from the pressurizer level controller. If an actual low level condition exists in the pressurizer, as is likely during a loss of coolant event, the CCP flow control valve will be throttled open, directing some of the CCP discharge flow to the RCP seals.

The PDP will trip, load shed from its power supply by a SI signal. PDP gas supply and vent valves automatically close.

The letdown isolation valves and the containment isolation valves close, stopping letdown flow out of the containment. The letdown orifice isolation valves close on associated valve interlocks.

SI closure of letdown isolation valves was added to automatically isolate the flowpath that could exist from the RCS to the PRT through Letdown Relief u-8117.

The motor operated RCP seal water return isolation valves will close, stopping seal water return flow out of the containment. If the RCS pressure remains above 150 psig, the seal water return relief (1-8121, 2CS-8000) will lift, directing seal leakoff and excess letdown (if aligned) flow to the pressurizer relief tank.

CCW flow to the excess letdown heat exchanger is isolated on a Phase A Containment Isolation signal (which is actuated by a SI signal) when the associated CCW containment isolation valves close.

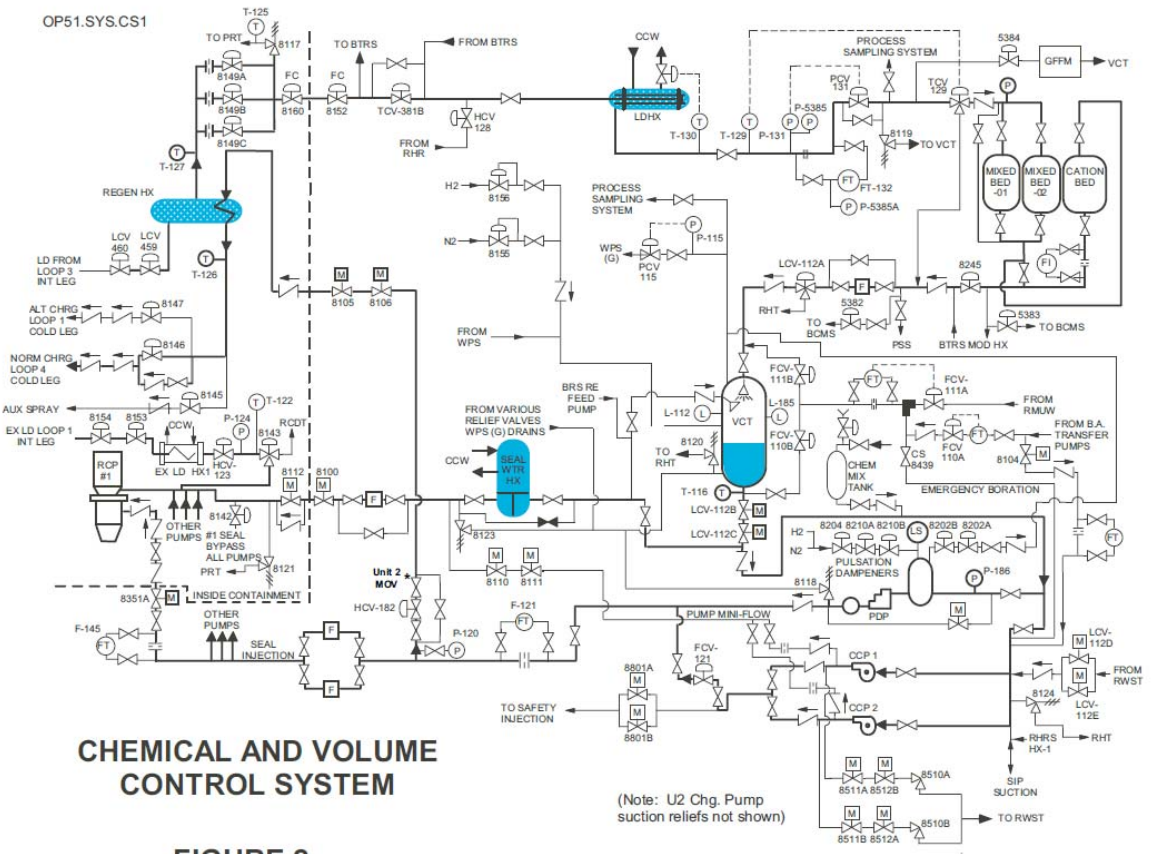

Examination Outline Cross-Reference	Level	RO	SRO
Rev. Date: 1/14/2015	Tier #	2	n/a
Change: 2	Group #	1	n/a
	K/A #	007 K4.01	n/a
Level of Difficulty: 3	Importance Rating	2.6	n/a

Pressurizer Relief Tank / Quench Tank System: Knowledge of PRTS design feature(s) and/or interlock(s) which provide for the following: Quench tank cooling

Question 6

Unit 1 plant conditions:

- Reactor power = 100%
- A PRZR Safety valve has been leaking by it seat
- PRT temperature = 120°F

Based on the above conditions, complete the following statements:

1. At the current temperature, the PRT ___(1)____ can maintain its design capability to absorb the heat from a Relief/Safety valve discharge.

2. It order to cool the PRT, the RCDT system pumps water ___(2)____.

   A. (1) is
      (2) through a U-tube heat exchanger in the lower part of the PRT

   B. (1) is
      (2) directly into the PRT vapor space through spray nozzles

   C. (1) is NOT
      (2) through a U-tube heat exchanger in the lower part of the PRT

   D. (1) is NOT
      (2) directly into the PRT vapor space through spray nozzles

Answer: D

The question matches the KA because it requires knowledge of how the PRT is cooled.

Explanation / Plausibility:

Per the study guide, keeping the PRT temperature below 113°F ensures that it is within design capability. At 120°F, it is NOT within its capabilities.

A. 1st part is incorrect. 2nd part is incorrect because RCDT water is sprayed directly into the PRT vapor space. It is plausible because this is a typical heat exchanger arrangement.

B. 1st part is incorrect. 2nd part is correct.

C. 1st part is correct because per the study guide, ensuring temperature is <113°F ensures that the PRT is within its design capabilities. 2nd part is incorrect but plausible (see A).

D. 1st part is correct (see C). 2nd part is correct.

Technical Reference: (Attach if not previously provided including revision number)	LO21.SYS.RC4
	LO21.SYS.RC1
	Reactor Coolant System Study Guide

Proposed references to be provided to applicants during examination: _____

Learning Objective: **DESCRIBE** the components of the Reactor Coolant system including interrelations with other systems to include interlocks and control loops. (LO21.SYS.RC1.OB03)
DESCRIBE the components of the Reactor Coolant Drain Tank system including interrelations with other systems to include interlocks and control loops. (LO21.SYS.RC4.OB03)

Question Source:	Bank #		
	Modified Bank#		
	New	X	
Question History:	Last NRC Exam		
Question Cognitive Level	Memory or Fundamental Knowledge		X
	Comprehension or Analysis		
10 CFR Part 55 Content:	55.41	41.7	
	55.43	n/a	

Reactor Coolant System Study Guide

Pressurizer Relief Tank

The Pressurizer Relief Tank (PRT) is an 1800 ft^3 stainless steel tank, located in its own room, on the 820' elevation of containment. It condenses and cools the discharge from the pressurizer safety and relief valves (see Figure 17). Other relief valves located inside the Containment Building also discharge to the PRT. It is normally filled to between 64% and 88%, with reactor makeup water, and has a 1 psig to 7 psig nitrogen blanketed atmosphere. Maintaining water temperature below 113°F preserves PRT design capabilities.

Steam discharges into the PRT through a sparger pipe beneath the water level, which condenses the steam. A vent hole in the sparger line prevents siphoning water back through this line. The PRT is also equipped with an internal spray and a drain line, used to cool the tank after a discharge. A sample line permits periodic gas sampling of the PRT to check for hydrogen and/or oxygen accumulation. Two rupture disks prevent the PRT from exceeding a design pressure of 100 psig. They will rupture at approximately 91 psig, discharging directly into containment.

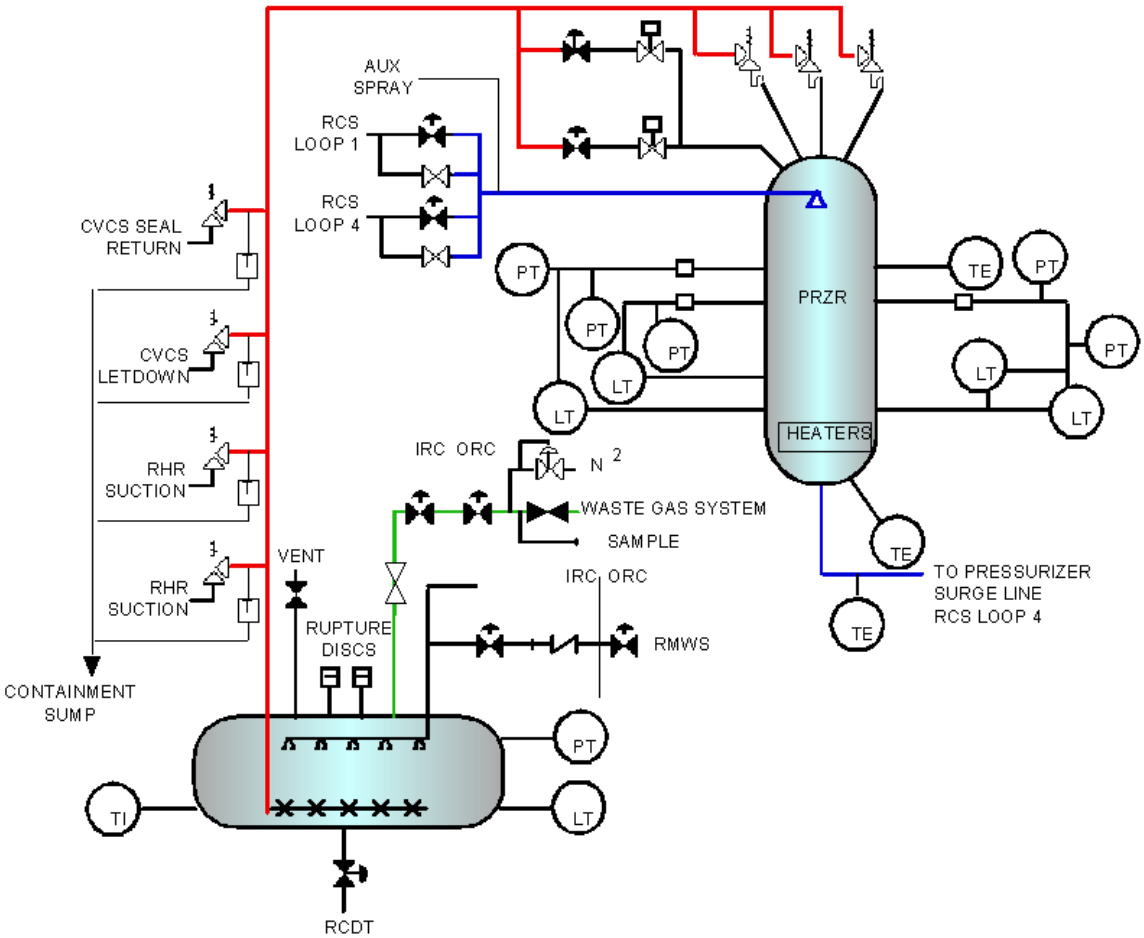

PRESSURIZER AND RELIEF TANK

FIGURE 17

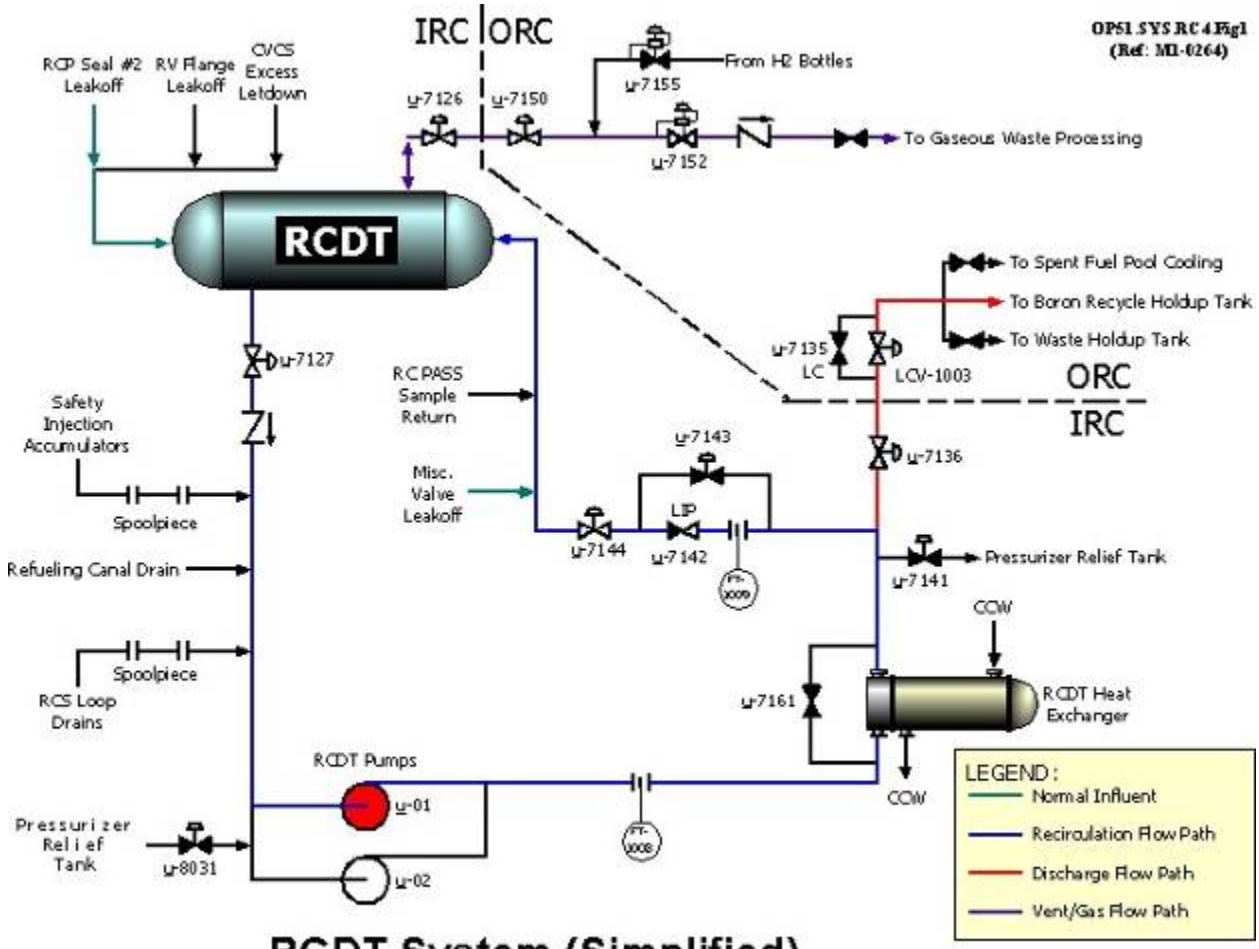

RCDT System (Simplified)
Figure 1

4/9/2008

Examination Outline Cross-Reference	Level	RO	SRO
Rev. Date: 12/22/2014	Tier #	2	n/a
Change: 1	Group #	1	n/a
	K/A #	007 A4.09	n/a
Level of Difficulty: 4	Importance Rating	2.5	n/a

Pressurizer Relief Tank / Quench Tank System: Ability to manually operate and/or monitor in the control room: Relationships between PRZR level and changing levels of the PRT and bleed holdup tank.

Question 7

Unit 1 plant conditions:

- Reactor power = 100%
- PRT level is increasing slowly
- PRT temperature = 102°F increasing slowly
- ABN-103, Excessive Reactor Coolant Leakage is in progress
- RCS leakage through a leaking PRZR safety valve is determined to be 160 gallons per day

Based on the above conditions, complete the following statements:

1. PRZR level indication should be ___(1)____.

2. Based on the amount of leakage through the safety valve, ABN-103 ___(2)____ require the plant to be shutdown due to being greater than Technical Specification limits.

A. (1) decreasing
(2) does

B. (1) decreasing
(2) does NOT

C. (1) remaining constant
(2) does

D. (1) remaining constant
(2) does NOT

Answer: D

The question matches the KA because it requires knowledge of how PRZR level reacts to a leak in the top of the pressurizer based on the change in PRT level and temperature.

Explanation / Plausibility:

A. 1st part is incorrect because the leak rate is small and well within the ability of the makeup system to maintain PRZR level on program. It is plausible because if the leak rate was significant enough, it would be correct. 2nd part is incorrect because ABN 3 requires a shutdown if RCS leakage is greater than TS limits. The limit for identified leakage is 10 gpm. It is plausible because the TS limit for Primary to Secondary leakage is 150 gpd. If it were a SGTL, it would be correct.

B. 1st part is incorrect but plausible (see A).. 2nd part is correct.

C. 1st part is correct. 2nd part is incorrect but plausible (see A).

D. 1st part is correct. 2nd part is correct.

Technical Reference: (Attach if not previously provided including revision number)	TS 3.4.13, 3.4.14
	ABN-3 Excessive Reactor Coolant Leakage
	Reactor Coolant System Study Guide

Proposed references to be provided to applicants during examination: _____

Learning Objective:

Given a Technical Specification or a Technical Specification situation, **DIAGNOSE** the situation and **APPLY** the LCO and SR Applicability of Section 3.0 to **DETERMINE** all corrective actions. (LO21.RLS.SL1.OB12)

Question Source:	Bank #	
	Modified Bank#	
	New	X
Question History:	Last NRC Exam	
Question Cognitive Level	Memory or Fundamental Knowledge	
	Comprehension or Analysis	X

10 CFR Part 55	55.41	41.7
Content:	55.43	n/a

Reactor Coolant System Study Guide

Pressurizer Relief Tank

The Pressurizer Relief Tank (PRT) is an 1800 ft^3 stainless steel tank, located in its own room, on the 820' elevation of containment. It condenses and cools the discharge from the pressurizer safety and relief valves (see Figure 17). Other relief valves located inside the Containment Building also discharge to the PRT. It is normally filled to between 64% and 88%, with reactor makeup water, and has a 1 psig to 7 psig nitrogen blanketed atmosphere. Maintaining water temperature below 113°F preserves PRT design capabilities.

Steam discharges into the PRT through a sparger pipe beneath the water level, which condenses the steam. A vent hole in the sparger line prevents siphoning water back through this line. The PRT is also equipped with an internal spray and a drain line, used to cool the tank after a discharge. A sample line permits periodic gas sampling of the PRT to check for hydrogen and/or oxygen accumulation. Two rupture disks prevent the PRT from exceeding a design pressure of 100 psig. They will rupture at approximately 91 psig, discharging directly into containment.

ABN-103, "Excessive Reactor Coolant Leakage"

ABN-103 describes the operator actions to be taken in the event of excessive RCS leakage and is applicable in Modes 1, 2, and 3 with RCS pressure greater than 1000 psig.

The intent of this procedure is to stabilize the loss of RCS inventory, then locate the leak. First the operator will verify at least one charging pump running and that the charging pump controller is maintaining pressurizer level. If pressurizer level is decreasing, charging flow control is taken to manual and charging flow is increased. If pressurizer level decreases in an uncontrollable manner, the operator trips the reactor and initiates safety injection. Pressurizer valve status and PRT status are checked to determine if the leak is a steam space leak.

Attempts are made to determine the location of the leak. Steam generator parameters are checked. If the steam generator parameters indicate a leak, then the operator performs ABN-106, "High Secondary Activity." The primary sampling valves are verified closed. Personnel are dispatched to search for the leak by checking the RHR, safety injection, RCS letdown and makeup systems for signs of leakage. Operators check other areas and systems for signs of leakage. PC-11 trends, SI accumulator levels, and containment sumps are checked normal. Letdown and normal charging, reactor vessel head O-rings, and incore instrumentation are checked for leakage.

The procedure contains attachments for calculating the leakage rate. These attachments may be used for gross leakage estimation. OPT-303, "Reactor Coolant System Water Inventory," is performed to determine if any technical specification RCS leakage limiting condition is exceeded.

CENTRIFUGAL CHARGING PUMPS

Centrifugal Charging Pumps u-01 and u-02 take separate suctions off of the common charging pump suction piping. These pumps are powered by 600 horsepower, 1800 rpm motors supplied from 6.9 kV engineered safeguards buses uEA1 and uEA2. Buses uED1 and uED2 provide 125 VDC power to the breaker control circuits of Centrifugal Charging Pumps u-01 and u-02, respectively. Each pump is rated at 150 gpm at a differential pressure of approximately 2590 psid across the pump. Each pump is rated for a maximum rated flow of 550 gpm at approximately 625 psid across the pump.

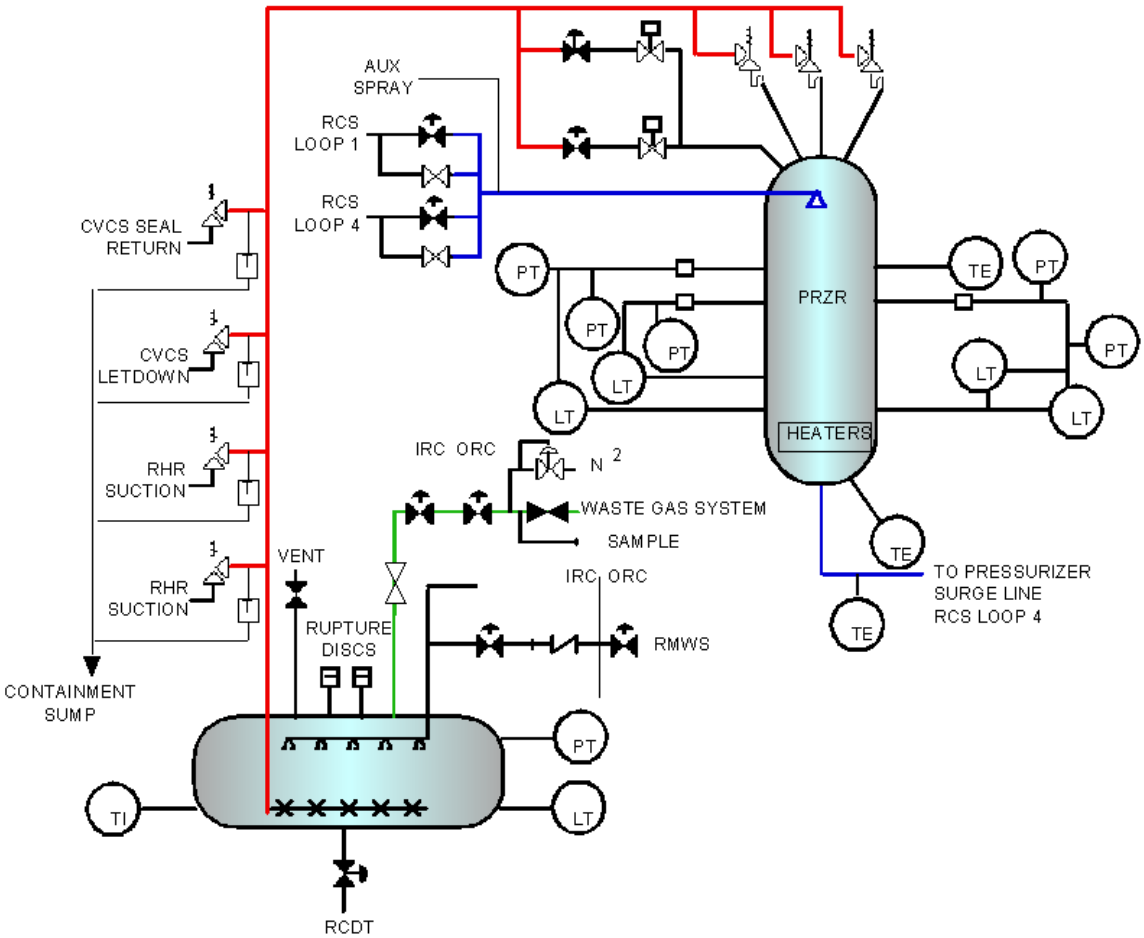

PRESSURIZER AND RELIEF TANK

FIGURE 17

2.3 Operator Actions

ACTION/EXPECTED RESPONSE	RESPONSE NOT OBTAINED
[C] 14 Check RCS leakage Rate:	
☐ a. Establish conditions AND perform RCS leakage rate test per OPT-303	a. IF OPT-303 can NOT be performed, THEN estimate gross leakage per Attachment 1.
☐ b. Verify unidentified RCS leakage - LESS THAN 1 gpm	b. Perform the following: 1) IF unidentified RCS leakage is greater than 1 gpm, THEN manually close all containment ventilation isolation valves per Attachment 2. 2) Refer to Technical Specification 3.4.13 and 3.4.14 for leakage limits.
☐ 15 Investigate any previous maintenance which may have affected the RCS pressure boundary.	
☐ 16 Verify Technical Specification 3.4.13 and 3.4.14, Reactor Coolant System Leakage - NOT EXCEEDED	IF any Limiting Condition for Operation is exceeded in MODE 1 OR 2, THEN commence a Reactor Shutdown per IPO-003A/B, while continuing with this procedure. IF any Limiting Condition for Operation is exceeded in MODE 3 OR 4, THEN cooldown to MODE 5 per IPO-005A/B, while continuing with this procedure.
17 Check VCT status	
☐ a. Automatic makeup to VCT - AVAILABLE	a. Align automatic makeup to VCT per SOP-104A/B.
☐ b. VCT level trending between 46% and 56% - FULL	b. Monitor VCT level. WHEN level is being maintained between 46% and 56%, THEN perform Step 18.

3.4 REACTOR COOLANT SYSTEM (RCS)

3.4.13 RCS Operational LEAKAGE

LCO 3.4.13 RCS operational LEAKAGE shall be limited to:

a. No pressure boundary LEAKAGE;

b. 1 gpm unidentified LEAKAGE;

c. 10 gpm identified LEAKAGE; and

d. 150 gallons per day primary to secondary LEAKAGE through any one steam generator (SG).

APPLICABILITY: MODES 1, 2, 3, and 4

ACTIONS

CONDITION	REQUIRED ACTION	COMPLETION TIME
A. RCS operational LEAKAGE not within limits for reasons other than pressure boundary LEAKAGE or primary to secondary LEAKAGE.	A.1 Reduce LEAKAGE to within limits.	4 hours
B. Required Action and associated Completion Time of Condition A not met. OR Pressure boundary LEAKAGE exists. OR Primary to secondary LEAKAGE not within limits	B.1 Be in MODE 3. AND B.2 Be in MODE 5.	6 hours 36 hours

Examination Outline Cross-Reference	Level	RO	SRO
Rev. Date: 12/22/2014	Tier #	2	n/a
Change: 1	Group #	1	n/a
	K/A #	008 K3.01	3.4
Level of Difficulty: 3	Importance Rating	3.4	n/a

Component Cooling Water System: Knowledge of the effect that a loss or malfunction of the CCWS will have on the following: Loads cooled by CCWS.

Question 8

Unit 1 plant conditions:

- Reactor power = 50%
- The air line to CCW valve 1-TV-4646, LTDN HX CCW RET TEMP CTRL VLV severs resulting in a loss of air to the valve

Based on the above conditions, complete the following statement:

The Manual/Auto station (1-TK-130, Letdown Heat Exchanger Temperature Controller) located on CB-06 will indicate 1-TV-4646 demanded position being ___(1)____ with actual CCW flow being ___(2)____.

A. (1) 100%
   (2) at maximum

B. (1) 100%
   (2) at minimum

C. (1) 0%
   (2) at maximum

D. (1) 0%
   (2) at minimum

Answer: C

The question matches the KA by requiring knowledge of how a CCW system malfunction will affect CCW flow to one of the CCW loads (heat exchangers).

Explanation / Plausibility:

The temperature control valve TV-4646 will fail open upon a loss of air so actual flow will increase. The CVCS system will see letdown temperature decrease due to the increased CCW flow and send a signal to cut down on CCW flow to the LD HX in an attempt to return temperature. The demand on the MA station will decrease (this is what the operator will see).

A. 1st part is incorrect because when the valve fails open, cooling will increase causing demand to go down. It is plausible because if it indicated actual valve position, it would be correct. 2nd part is correct. Upon a loss of air, TV-4646 will fail open.

B. 1st part is incorrect but plausible (see A). 2nd part is incorrect because flow will be at maximum. It is plausible because if the TV-4646 failed closed upon losing air, it would be correct.

C. 1st part is correct. As actual cooling flow increases, cooling will increase causing demand for the temperature valve to go low (telling the valve to go closed). 2nd part is correct. Actual CCW flow will go to maximum because the valve fails open.

D. 1st part is correct. 2nd part is incorrect but plausible (see B).

Technical Reference: (Attach if not previously provided including revision number)	CCW LO21.SYS.CC1
	CCW Study Guide

Proposed references to be provided to applicants during examination: _____

Learning Objective: **DESCRIBE** the components of the Component Cooling Water system including interrelations with other systems to include interlocks and control loops. (LO21.SYS.CC1.OB03) **EXPLAIN** the instrumentation and controls of the Component Cooling Water System and **PREDICT** the system response. (LO21.SYS.CC1.OB04)

Question Source:	Bank #	
	Modified Bank#	
	New	X

Question History:	Last NRC Exam		
Question Cognitive Level	Memory or Fundamental Knowledge		
	Comprehension or Analysis		X
10 CFR Part 55 Content:	55.41		
	55.43	n/a	

LO21.SYS.CC1

LTDN HX: Part of CVCS/ Cools letdown prior to CVCS demins/ Inlet is controlled by a manual butterfly valve/ Outlet controlled by AOV globe valve, TV-4646, w/manual isolation downstream and bypass/ TV-4646 receives a positioning signal from TE-0130, in CVCS system/ TE measures temperature of LTDN after HX/ MA station, TK-130, on CB-06 gives demanded position; not valve position/ Open & close indication on CB-03/ FO on loss of power or air giving max cooling to LTDN flow.

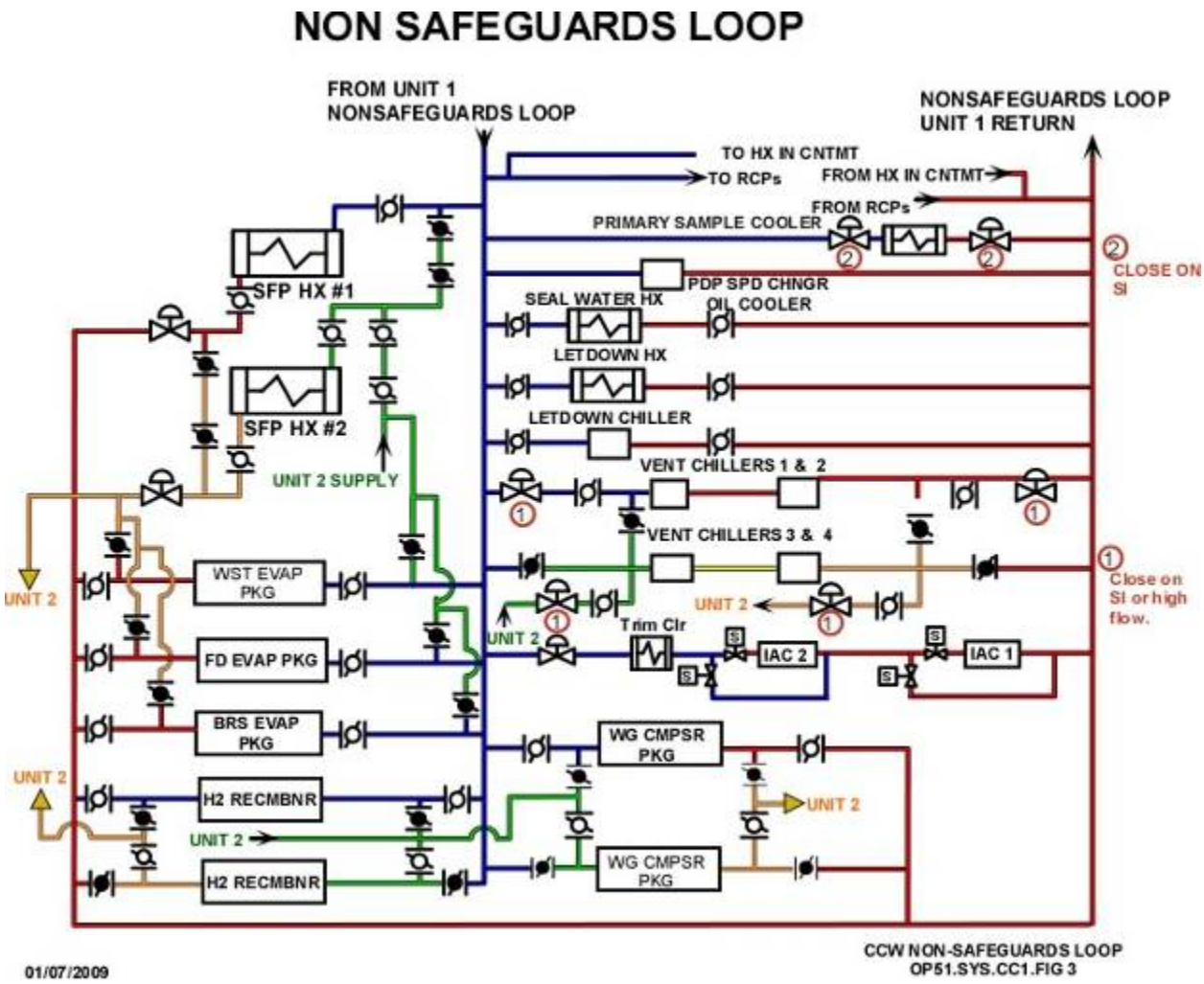

Component Cooling Water Study Guide

Letdown Heat Exchanger

CCW is used for cooling of the letdown flow from the RCS prior to the CVCS demins. The inlet is controlled by a manual butterfly valve. The outlet flow is controlled by an air operated globe valve. There is a manual isolation downstream of the control valve and a manual bypass around the control valve.

The control valve, u- TV-4646, receives a positioning signal from a temperature element, u-TE-0130, that is part of the CVCS system. The temperature element measures the temperature of the letdown after the heat exchanger. The valve is controlled by a manual/auto (MA) station, TK-130, located on u-CB-06. Open/close position is indicated by lights located on u-CB-03. The MA station will give valve position demanded and not valve position. On a loss of power or instrument air, TV-4646 fails open to give maximum cooling to the letdown flow.

There is a flow-indicating switch on the outlet of the heat exchanger. This switch has local indication of CCW flow from the heat exchanger. There is a local temperature indicator for CCW return located at the heat exchanger.

Examination Outline Cross-Reference	Level	RO	SRO
Rev. Date: 12/22/2014	Tier #	2	n/a
Change: 1	Group #	1	n/a
	K/A #	008 2.1.32	n/a
Level of Difficulty: 3	Importance Rating	3.8	n/a

Component Cooling Water: Ability to explain and apply system limits and precautions.

Question 9

Which ONE of the following is correct regarding the limitations associated with starting CCW pumps in accordance with SOP-502A, Component Cooling Water System?

A. A CCW pump may have 2 starting attempts from ambient temperature without a delay in between. After that, there should be at least a 45 minute delay between additional starting attempts.

B. If a CCW pump doesn't start initially when at ambient temperature, there should be at least a 15 minute delay between any additional starting attempts.

C. A CCW pump may have 2 starting attempts from operating temperature without a delay in between. After that, there has to be a minimum of a 15 minute delay between additional starting attempts.

D. If a CCW pump doesn't start initially when at operating temperature, there should be at least a 45 minute delay between any additional starting attempts.

Answer: A

The question matches the KA by requiring knowledge of starting duties (operating component controls) during a plant startup.

Explanation / Plausibility:

There are two L&Ps associated with pump starts in the CCW system. One is worded “starting attempts” and one is worded with “restart attempts”. They may seem different but both actually state that you have two starting attempts. They also have different waiting periods for additional restart attempts depending upon when you are at ambient temperature (in this case) or at normal operating temperature.

A. This is correct per the L&P of SOP-502A

B. This is incorrect because you are allowed 2 starting attempts before adding a delay time in between starts. It is plausible because the wording is similar to the actual L&Ps.

C. This incorrect because you are allowed 1 restart attempt with 15 minutes between additional starting attempts. It is plausible because the wording is similar to the actual L&Ps.

D. This is incorrect because you are allowed 1 immediate restart after which the waiting period is 15 minutes.

Technical Reference: (Attach if not previously provided including revision number)	SOP-502A, COMPONENT COOLING WATER SYSTEM	
	CCW Study Guide	

Proposed references to be provided to applicants during examination: _____

Learning Objective: **COMPREHEND** the normal, abnormal and emergency operation of the Component Cooling Water system. (LO21.SYS.CC1.OB04)

Question Source:	Bank #		
	Modified Bank#		
	New	X	
Question History:	Last NRC Exam		
Question Cognitive Level	Memory or Fundamental Knowledge		X
	Comprehension or Analysis		
10 CFR Part 55 Content:	55.41	41.7	
	55.43	n/a	

CCW STUDY GUIDE

OPERATIONS

NORMAL

Normal operation of the CCW system is per SOP-502A (B). The procedure covers operations of the CCW pumps, adding water to the surge tank, chemical addition, stopping a single pump, removing one safeguard loop from service, system fill and vent and draining of individual sections of the system. Alternate operating conditions for balancing flows, transferring water from the surge tank, placing the surge tank level glasses in service, supplying common loads (SOP-502A only) and bleed and feed of the system are also covered.

Some selected precautions from SOP-502 are:

1. All release from the CCW system should be coordinated with Chemistry and Environmental to ensure compliance with State and Federal regulatory requirements.
2. To prevent Chloride infusion if a tube leak exists, the CCW heat exchanger should be filled, vented and pressurized prior to operating SSW, or the CCW shell side shall be isolated and drained with the drain valves open.
3. Starting a second CCW pump or isolation of a large load may increase flow to the vent chillers causing FV-4650A and FV-4650B isolation, if flow remains high for 30 seconds.

Some selected limitations from SOP-502 are:

1. CCW Pump bearing temperature exceeding 200°F requires the pump to be stopped
2. Flowrate on the CCW System of 17,500 gpm per CCW pump should not be exceeded
3. A CCW pump may have two (2) starting attempts from ambient temperature. At least a 45 minute standing period should be observed between any additional attempts.
4. A CCW pump may have one (1) immediate restart attempt from operating temperature. At least 15 minute running period should be observed between any additional restart attempts.

See a current revision of the SOP for complete description of the actions.

During normal operation, one train per unit will be in service supplying both safeguards loop and the non-safeguards loop. The other train's pump and heat exchanger will be in standby and will start automatically on low header pressure of U1 (A)60psig, (B)64psig and U2 (A/B) 56 psig in the operating train. The system is designed such that the standby pump can be supplying system loads within 60 seconds even if all power is lost and the emergency diesel generators must start to supply power.

CCW is supplied to both safeguards loops during normal operation so that any of the redundant safeguards equipment may be manually started immediately in the event of an accident without requiring an automatic signal. The second train is required to be operable to meet the single failure criteria.

The CCW pumps are interlocked with the Station Service Water pumps so that if the CCW pump starts, the train associated SSW pump will also start. The pump room cooler and the train associated safety recirc chiller also receive a start signal.

The water in the CCW system is analyzed weekly for pH, suspended impurities, chloride, fluoride, iron, copper, dissolved oxygen, total gamma, and corrosion inhibitor concentration. The filter/demineralizer skid normally maintains chloride and suspended impurities at a low level. Corrosion inhibitors are added as required through the chemical addition tank. Corrosion inhibitor concentration is maintained as required for the control of long-term corrosion. The following corrosion inhibitors, biocides and chemicals are routinely added to the system:

- Sodium Molybdate
- Sodium nitrite/Borax/Tolyltrizole
- Hydrazine
- Callgon H-300 (Microbiocide)
- Sodium Hydroxide (for pH adjustment)

The component cooling system is designed on the basis that the following water chemistry is maintained:

- pH at 25°C 8.5 to 9.8
- Chloride, ppb < 150
- Fluoride ppb < 150

Makeup water- Same quality as listed for the reactor coolant system

STARTUP

During plant startup the primary function of the CCW system is to remove the heat generated by plant systems even though the reactor is not producing power. The heat load at this time is greatly reduced from the normal operating load. The major loads would be the RHR heat exchangers up to the point they are removed from service (350°F in the RCS) and the RCPs.

Starting a second CCW pump at low heat loads will require throttling open either RHR or CS heat exchanger valves to prevent lifting CCW relief valves.

SHUTDOWN

Following a plant shutdown, the CCW system is needed to supply water to the RHR heat exchangers for cooldown. If both trains are used, the plant may be cooled from 350°F to 140°F in approximately 24 hours. Cooldown may be accomplished using only one train but may take as long as 100 hours. System limitations limit the maximum CCW temperature to 122°F. Consequently the RHR system must be manually throttled to limit the temperature in the CCW system. (RHR is also throttled to limit the rate of cooldown of the RCS.) During refueling operations, one train is required to provide cooling to the Spent Fuel Pool Cooling System.

4.0 LIMITATIONS AND NOTES

4.1 Limitations

- CCW Pump bearing temperature exceeding 200°F requires the CCW Pump be stopped.
- Two CCW trains shall be OPERABLE in MODES 1, 2, 3 AND 4 (TS 3.7.7)
- Flow rates on the CCW System of 17,500 gpm per CCW pump should not be exceeded.
- A CCW Pump Motor may have two (2) starting attempts from ambient temperature. At least a 45 minute standing period should be observed between any additional attempts.
- A CCW Pump motor may have one (1) immediate restart attempt from operating temperature. At least a 15 minute running period should be observed between any additional restart attempts.
- Normal flow rates for CCW supplied loads are listed in Attachment 1, "Normal CCW Flows".
- CCW System relief valves are listed in Attachment 2, "CCW Relief Valves".
- The maximum flow rate for CCW flow through the CCW Filter Demineralizer Skid is 80 gpm. CCW flow through the skid is controlled at approximately 50 gpm in accordance with COP-502A, "Component Cooling Water."
- CCW supply should not be isolated to operating equipment.
- The RHR AND Containment Spray Heat Exchanger supply manual butterfly valves (flow restricting orifices) are normally LOCKED CLOSED to provided acceptable CCW flow balancing for Design Basis Accidents to limit heat addition to CCW. These valves are not required to be opened to mitigate a Design Basis Accident (e.g. LOCA); however, they may be opened to accelerate cooldown after accident heat loads have sufficiently decayed if desired AND if the valve locations are accessible. Therefore, 1CC-0109 AND 1CC-0157, which are closed to provide a flow limiting function in MODES 1, 2 AND 3, may be opened in MODE 3, at OR below 400 °F, as needed to support RHR cooldown in MODE 4, 5 AND 6. Manual Valves 1CC-0107 AND 1CC-0158, which provide a flow limiting function in MODES 1, 2 AND 3 may be open in MODE 4, 5, AND 6.

4.2 Notes

None

Examination Outline Cross-Reference	Level	RO	SRO
Rev. Date: 12/22/2014	Tier #	2	n/a
Change: 1	Group #	1	n/a
	K/A #	010 K3.01	n/a
Level of Difficulty: 3	Importance Rating	3.8	n/a

Pressurizer Pressure Control System: Knowledge of the effect that a loss or malfunction of the PRZR PCS will have on the following: RCS

Question 10

Unit 1 initial conditions:

- Reactor power = 80%
- RCS pressure is at setpoint
- PRZR PRESS CTRL CHAN SELECT (1/1 -PS-455F) on 1-CB-05, is selected to 455/456
- Both PRZR PORVs are in AUTO
- Pressurizer Pressure Transmitter PT-456 fails HIGH

Based on the above conditions complete the following statement:

____(1)____ pressurizer spray valve will open and the reactor ____(2)____ trip on low RCS pressure. (Assume no operator action.)

A. (1) One
   (2) will

B. (1) One
   (2) will NOT

C. (1) Neither
   (2) will

D. (1) Neither
   (2) will NOT

Answer: D

The question matches the KA by requiring knowledge of how a PRZR pressure control malfunction will affect RCS pressure.

Explanation / Plausibility:

When positioned to 455/456, PT 455 will be controlling the signal to One PORV , both PRZR Spray Valves and the PRZR heaters. PT 456 will be controlling the other PORV. When PT-456 fails high, the only component affected is (PORV) PCV-0456. The PORV will open but an interlock will close this PORV when RCS pressure decreases to 2185 psig which is fed from PT-457.

A. 1st part is incorrect because the spray valves are operated together and in this case, from PT-455. It is plausible because the PORVs ARE operated from different PTs in this switch configuration. 2nd part is incorrect because the spray valves are not controlled from the failed PT. It is plausible however because PORV PCV-0456 will fail open and start to decrease RCS pressure. There is an interlock (fed from PT-457) that will close this PORV when RCS pressure decreases to 2185 psig.

B. 1st part is incorrect but plausible (see A). 2nd part is correct. Neither spray valve will open and although one PORV will open, an interlock will override the open signal and close the PORV at 2185 psig.

C. 1st part is correct. The spray valves operate together based on a signal from the Master Controller. This controller is receiving a pressure signal from PT-455 based on the conditions given. 2nd part is incorrect but plausible (see A).

D. 1st part is correct. 2nd part is correct.

Technical Reference: (Attach if not previously provided including revision number)	Pressurizer Pressure and Level Control Study Guide LO21.SYS.PP1

Proposed references to be provided to applicants during examination: _____

Learning Objective:	**EXPLAIN** the instrumentation and controls of the Pressurizer Pressure Control System and **PREDICT** the system response. (LO21.SYS.PP1.OB04)

Question Source:	Bank #	
	Modified Bank#	
	New	X
Question History:	Last NRC Exam	
Question Cognitive Level	Memory or Fundamental Knowledge	
	Comprehension or Analysis	X

10 CFR Part 55 Content:	55.41	41.7
	55.43	n/a

Pressure Measuring Instruments

Pressure is a force exerted by some medium, usually a fluid, over a unit area (e.g. pounds per square inch). Pressurizer pressure instruments measure the difference between pressure in the pressurizer and in the containment building atmosphere. This measurement is referred to as gauge pressure and is expressed as pounds per square inch gauge (psig).

Five pressure detectors measure the pressure in the steam space at the top of the pressurizer. CPNPP uses bourdon tube instruments to provide pressurizer pressure signals. **(See Figure 2)** The bourdon tube elastic transducer operates on the principle that a deflection or deformation of a bent tube with an applied internal pressure is relative to the balance of the internal pressure force and the elasticity of the tube material. We indirectly measure pressure by measuring the displacement of the end of the tube as it tends to straighten with increasing internal pressure. The resulting displacement is used to develop an electronic signal by positioning an electrical pickup device.

Each pressure detector is associated with a pressure transmitter that develops an electronic signal for remote indication. Transmitter u-PT-455F provides indication at the Remote Shutdown Panel. Transmitters u-PT-455, 456, 457, and 458 provide Control Room indication, control, protection, and alarm functions. 118VAC instrument buses supply power to the transmitters, uPC1 to PT-455, uPC2 to PT-456, uPC3 to PT-457, and uPC4 to PT-458. Power is supplied to each instrument channel from separate instrument busses in order to provide electrical separation.

Pressure channels 455, 456, 457 and 458 provide indication on the Main Control Board with 1700 - 2500 psig meters on control board panel u-CB-05. Each of these channels also provides input to the Solid State Protection System (SSPS) for the generation of reactor protection signals. A switch on the control board selects one of these channels to supply a chart recorder on u-CB-05. **(See Figure 3)** Another switch (1/u-PS-455F), located on u-CB-05, is a three-position switch that directs two channels to provide controlling functions. The center position of the switch, labeled 455/456, is normally selected. In this position, channels 455 and 456 are selected for control. The position labeled 457/456 substitutes channel 457 for channel 455, and the position labeled 455/458 substitutes channel 458 for channel 456.

The controlling signals function as follows:

Channel 455 normally selected - channel 457 alternate:

Provides actual pressure signal for the PRZR master pressure controller u-PK-455A

Controls both spray valve controllers u-PK-455B & C

Controls variable heater output

Actuates power operated relief valve u-PCV-455A at +100 psig error signal

Actuates pressure deviation hi alarm at +75 psig error signal

Actuates low pressure alarm and energize backup heaters at –25 psig error signal

Channel 456 normally selected - channel 458 alternate:

Actuates power operated relief valve u-PCV-456 at 2335 psig

Actuates high pressure alarm at 2310 psig

Pressurizer Pressure Controller

The pressurizer master pressure controller is a PI (Proportional + Integral) type controller with an associated manual/auto station (u-PK-455A) located on u-CB-05. **(See Figures 4 & 5)** In automatic operation, the controller uses pressurizer heaters and spray valves to maintain pressurizer pressure at 2235 psig under normal conditions, and a power operated relief valve (PORV) to mitigate an overpressure transient (e.g. turbine runback). Heaters, spray valves and PORV operate according to the controller output signal, which is indicated on the M/A station. In manual operation, the controller output signal is adjusted using raise and lower pushbuttons. Since the 2235 psig automatic pressure setpoint cannot be adjusted, the master pressure controller must be operated manually to control pressure during plant heatup and cooldown.

In automatic operation, the pressure control circuitry compares actual pressurizer pressure with the setpoint of 2235 psig to produce an error signal. The proportional function of the PI controller produces an output in proportion to the error signal. The integral, or reset function modifies controller output in order to drive actual pressure back to setpoint. The integral function operates on a time constant that determines how often the integral gain, or reset signal is added to the error signal. A derivative, or rate-of-change function for the master pressure controller is available but is not used at CPNPP.

The compensated error signal from the master pressure controller controls spray valves, heaters, and PORV u-PCV-0455A in order to drive pressure to the 2235 psig setpoint. The actual pressure at which the spray valves, heaters or PORV operate is based upon the amount of time that actual pressure is off setpoint. Time passing with pressure off setpoint causes the compensated error signal to continue to increase even if the actual pressure deviation is constant. Controller output automatically changes, operating equipment as necessary to bring pressure back to 2235 psig. The master pressure controller is manually operated by setting the output signal to operate the desired equipment. The following table equates equipment operation with controller output and uncompensated error.

ACTION	OUTPUT %	ERROR SIGNAL	NOMINAL VALUE
PORV opens	81.3	+100 psig	2335 psig
PORV closes	75.0	+80 psig	2315 psig
Spray valves fully open	73.4	+75 psig	2310 psig
Spray valves start to open	57.8	+25 psig	2260 psig

Variable heaters off	54.7	+15 psig	2250 psig
Normal operating pressure	50.0	- 0 -	2235 psig
Variable heaters fully on	45.3	–15 psig	2220 psig
Backup heaters off	44.7	–17 psig	2218 psig
Backup heaters on	42.2	–25 psig	2210 psig

Pressure Measuring Instruments

Pressure is a force exerted by some medium, usually a fluid, over a unit area (e.g. pounds per square inch). Pressurizer pressure instruments measure the difference between pressure in the pressurizer and in the containment building atmosphere. This measurement is referred to as gauge pressure and is expressed as pounds per square inch gauge (psig).

Five pressure detectors measure the pressure in the steam space at the top of the pressurizer. CPNPP uses bourdon tube instruments to provide pressurizer pressure signals. **(See Figure 2)** The bourdon tube elastic transducer operates on the principle that a deflection or deformation of a bent tube with an applied internal pressure is relative to the balance of the internal pressure force and the elasticity of the tube material. We indirectly measure pressure by measuring the displacement of the end of the tube as it tends to straighten with increasing internal pressure. The resulting displacement is used to develop an electronic signal by positioning an electrical pickup device.

Each pressure detector is associated with a pressure transmitter that develops an electronic signal for remote indication. Transmitter u-PT-455F provides indication at the Remote Shutdown Panel. Transmitters u-PT-455, 456, 457, and 458 provide Control Room indication, control, protection, and alarm functions. 118VAC instrument buses supply power to the transmitters, uPC1 to PT-455, uPC2 to PT-456, uPC3 to PT-457, and uPC4 to PT-458. Power is supplied to each instrument channel from separate instrument busses in order to provide electrical separation.

Pressure channels 455, 456, 457 and 458 provide indication on the Main Control Board with 1700 - 2500 psig meters on control board panel u-CB-05. Each of these channels also provides input to the Solid State Protection System (SSPS) for the generation of reactor protection signals. A switch on the control board selects one of these channels to supply a chart recorder on u-CB-05. **(See Figure 3)** Another switch (1/u-PS-455F), located on u-CB-05, is a three-position switch that directs two channels to provide controlling functions. The center position of the switch, labeled 455/456, is normally selected. In this position, channels 455 and 456 are selected for control. The position labeled 457/456 substitutes channel 457 for channel 455, and the position labeled 455/458 substitutes channel 458 for channel 456.

The controlling signals function as follows:

Channel 455 normally selected - channel 457 alternate:

Provides actual pressure signal for the PRZR master pressure controller u-PK-455A

Controls both spray valve controllers u-PK-455B & C

Controls variable heater output

Actuates power operated relief valve u-PCV-455A at +100 psig error signal

Actuates pressure deviation hi alarm at +75 psig error signal

Actuates low pressure alarm and energize backup heaters at –25 psig error signal

Channel 456 normally selected - channel 458 alternate:

Actuates power operated relief valve u-PCV-456 at 2335 psig

Actuates high pressure alarm at 2310 psig

Pressurizer Pressure Controller

The pressurizer master pressure controller is a PI (Proportional + Integral) type controller with an associated manual/auto station (u-PK-455A) located on u-CB-05. **(See Figures 4 & 5)** In automatic operation, the controller uses pressurizer heaters and spray valves to maintain pressurizer pressure at 2235 psig under normal conditions, and a power operated relief valve (PORV) to mitigate an overpressure transient (e.g. turbine runback). Heaters, spray valves and PORV operate according to the controller output signal, which is indicated on the M/A station. In manual operation, the controller output signal is adjusted using raise and lower pushbuttons. Since the 2235 psig automatic pressure setpoint cannot be adjusted, the master pressure controller must be operated manually to control pressure during plant heatup and cooldown.

In automatic operation, the pressure control circuitry compares actual pressurizer pressure with the setpoint of 2235 psig to produce an error signal. The proportional function of the PI controller produces an output in proportion to the error signal. The integral, or reset function modifies controller output in order to drive actual pressure back to setpoint. The integral function operates on a time constant that determines how often the integral gain, or reset signal is added to the error signal. A derivative, or rate-of-change function for the master pressure controller is available but is not used at CPNPP.

The compensated error signal from the master pressure controller controls spray valves, heaters, and PORV u-PCV-0455A in order to drive pressure to the 2235 psig setpoint. The actual pressure at which the spray valves, heaters or PORV operate is based upon the amount of time that actual pressure is off setpoint. Time passing with pressure off setpoint causes the compensated error signal to continue to increase even if the actual pressure deviation is constant. Controller output automatically changes, operating equipment as necessary to bring pressure back to 2235 psig. The master pressure controller is manually operated by setting the output signal to operate the desired equipment. The following table equates equipment operation with controller output and uncompensated error.

ACTION	OUTPUT %	ERROR SIGNAL	NOMINAL VALUE
PORV opens	81.3	+100 psig	2335 psig
PORV closes	75.0	+80 psig	2315 psig
Spray valves fully open	73.4	+75 psig	2310 psig
Spray valves start to open	57.8	+25 psig	2260 psig
Variable heaters off	54.7	+15 psig	2250 psig
Normal operating pressure	50.0	- 0 -	2235 psig
Variable heaters fully on	45.3	–15 psig	2220 psig
Backup heaters off	44.7	–17 psig	2218 psig
Backup heaters on	42.2	–25 psig	2210 psig

Power Operated Relief Valves

Two 3” power operated relief valves (PORVs), u-PCV-0455A & 0456, relieve steam from the top of the pressurizer at a nominal setpoint of 2335 psig. Each PORV has a relief capacity of 210,000 lbm/hr. Pneumatic actuators utilizing compressed nitrogen operate these valves. PORVs fail closed on loss of nitrogen or actuator solenoid power. The PORVs are arranged in parallel, but are connected to the pressurizer by a single 6” pipe. The PORVs discharge into a common line, which is routed to the Pressurizer Relief Tank (PRT).

The functional design of the PORVs is to maintain RCS pressure below the high pressure reactor trip setpoint during the design step-load decrease of 50% with rod control and steam dumps operating. In addition, the PORVs minimize challenges to the pressurizer safety valves and also may be used for low temperature overpressure protection. Some emergency recovery procedures require the use of PORVs to depressurize the RCS when RCPs are not running to provide spray flow.

3-position (CLOSE - AUTO - OPEN) handswitches on u-CB-05 allow manual operation of the PORVs. Valve position is indicated by handswitch lights and plant computer. Limit switches mounted on the valve yoke feed position indication. An alarm on u-CB-05 sounds when a PORV is not fully closed. **(See Figure 6)**

If either pressure control channel fails high and causes its associated PORV to open, the plant could be accidentally depressurized.

Examination Outline Cross-Reference	Level	RO	SRO
Rev. Date: 12/22/2014	Tier #	2	n/a
Change: 1	Group #	1	n/a
	K/A #	010 A4.02	n/a
Level of Difficulty: 4	Importance Rating	3.6	n/a

Pressurizer Pressure Control System: Ability to manually operate and/or monitor in the control room: PZR heaters.

Question 11

Unit 1 plant conditions:

- Reactor power was reduced from 100% to 60%
- Pressurizer Spray valves modulated open during the transient but did not close until PRZR pressure decreased to 2215 psig.
- PRZR level = 52%
- RCS Tave is on program

Based on the above conditions;

A. PRZR level is above program level and backup pressurizer heaters should be ON.

B. PRZR level is above program level and backup pressurizer heaters should be OFF.

C. PRZR level is at program level and backup pressurizer heaters should be ON.

D. PRZR level is at program level and backup pressurizer heaters should be OFF.

Answer: A

Question matches the KA by requiring knowledge of how PRZR heaters operate based on system parameters.

Explanation / Plausibility:

PRZR level varies from 25% to 60% as power increases from 0% to 100%. At 60% power, Program PRZR level should be ~ 46%. Backup PRZR heaters will energize due to one of two conditions: Pressure (come on at 2210 psig and go off at 2218 psig). They will also go on if PRZR level is more than 5% above program level to heat up PRZR water after an insurge.

A. 1st part is correct because program PRZR level for 60% is 46% level. 2nd part is correct because PRZR level is 6% above program level.

B. 1st part is correct. 2nd part is incorrect because heaters should be ON due PRZR level being greater than 5% above program.

C. 1st part is incorrect because program level is 46%. It is plausible because the applicant has to know how to calculate program PRZR level based on reactor power. It is plausible because without doing the actual calculation, it appears to close to program level. 2nd part is correct but plausible (see A).

D. 1st part is incorrect but plausible (see C). 2nd part is incorrect.

   PRZR level: 25% to 60% as power increases from 0% to 100%. This is a ratio of 2.86% power per 1% PRZR level. For 60% power, this equates to 46%.

Technical Reference: (Attach if not previously provided including revision number) Pressurizer Pressure and level Control Study Guide

Proposed references to be provided to applicants during examination: _____

Learning Objective: **EXPLAIN** the instrumentation and controls of the Pressurizer Level Control System and **PREDICT** the system response. (LO21.SYS.PP1.OB06)
EXPLAIN the normal, abnormal and emergency operation of the Pressurizer Pressure and Level Control System. (LO21.SYS.PP1.OB07)

Question Source:	Bank #	
	Modified Bank#	
	New	X
Question History:	Last NRC Exam	

Question Cognitive Level	Memory or Fundamental Knowledge		
	Comprehension or Analysis		X
10 CFR Part 55 Content:	55.41	41.7	
	55.43	n/a	

Pressurizer Pressure and Level Control Study Guide

BASIC OPERATION

The pressurizer is located above the rest of the Reactor Coolant System so that it can be used as a surge volume and venting point. The bottom of the pressurizer is connected to RCS loop 4 hot leg by the surge line. The surge line is a large diameter pipe (14”), which allows the rapid transfer of water between the pressurizer and the RCS. The top of the pressurizer is connected to RCS loops 1 and 4 cold legs by the spray lines. Water from downstream of reactor coolant pumps (RCPs) 1 and 4 is routed through spray valves to a single spray line connected to the top of the pressurizer. A spray nozzle atomizes the water entering the top of the pressurizer. **(See Figure 1)**

During normal plant operations, the pressurizer is filled with boiling water and steam. The temperature of the boiling (or saturated) water determines the pressure inside the entire Reactor Coolant System. Pressurizer temperature is controlled to regulate RCS pressure by energizing electric heaters in the bottom of the pressurizer to raise pressure, and by spraying the steam space (or steam bubble) in the top of the pressurizer with cooler water to reduce pressure.

Under normal operating conditions, the Pressurizer Pressure Control System will automatically maintain the plant at 2235 psig. Heaters maintain a saturated condition in the pressurizer and spray valves throttle open to hold pressure at the 2235 psig setpoint. Backup banks of heaters energize on decreasing RCS pressure. On increasing pressure, spray valves open automatically to cause partial steam bubble condensation. If pressure continues to increase, pneumatic power operated relief valves (PORVs) and code safety valves open to relieve steam from the pressurizer and ensure that the integrity of the Reactor Coolant System is not lost due to high pressure conditions.

A constant pressurizer level indicates that a balance exists between the charging flow into the Reactor Coolant System and the letdown flow into the Chemical and Volume Control System. During transients, pressurizer level will change because the reactor coolant will expand and contract as the plant temperature changes. The expansion and compression of the steam bubble in the pressurizer limits RCS pressure changes.

On an outsurge, or drop in pressurizer level, the expansion of the steam bubble causes a drop in pressure. As pressure decreases, some of the pressurizer liquid, which is at saturation (boiling) temperature, flashes to steam and limits the pressure drop. Conversely, on an insurge, or increase in pressurizer level, the compression of the steam bubble causes an increase in pressure, which is limited by the condensation of some of the steam.

Average Reactor Coolant System temperature (T_{AVG}) increases from 557°F at 0% reactor power to 585.4 °F (589.2°F) at 100% reactor power. Pressurizer level is programmed to change as a function of the T_{AVG} change. This allows the water in the RCS to expand as temperature increases from 0 - 100% power, raising pressurizer level from 25% to 60% without having to drain water from the RCS. In the same manner, pressurizer level is allowed to decrease during power reduction as the RCS water cools without the need to add water to make up for the contraction. The RCS **volume** is allowed to change as a result of temperature changes, while the

mass of the RCS water remains constant. This reduces transient response time and the amount of water required to be processed during normal operations.

Pressurizer Pressure Controller

The pressurizer master pressure controller is a PI (Proportional + Integral) type controller with an associated manual/auto station (u-PK-455A) located on u-CB-05. **(See Figures 4 & 5)** In automatic operation, the controller uses pressurizer heaters and spray valves to maintain pressurizer pressure at 2235 psig under normal conditions, and a power operated relief valve (PORV) to mitigate an overpressure transient (e.g. turbine runback). Heaters, spray valves and PORV operate according to the controller output signal, which is indicated on the M/A station. In manual operation, the controller output signal is adjusted using raise and lower pushbuttons. Since the 2235 psig automatic pressure setpoint cannot be adjusted, the master pressure controller must be operated manually to control pressure during plant heatup and cooldown.

In automatic operation, the pressure control circuitry compares actual pressurizer pressure with the setpoint of 2235 psig to produce an error signal. The proportional function of the PI controller produces an output in proportion to the error signal. The integral, or reset function modifies controller output in order to drive actual pressure back to setpoint. The integral function operates on a time constant that determines how often the integral gain, or reset signal is added to the error signal. A derivative, or rate-of-change function for the master pressure controller is available but is not used at CPNPP.

The compensated error signal from the master pressure controller controls spray valves, heaters, and PORV u-PCV-0455A in order to drive pressure to the 2235 psig setpoint. The actual pressure at which the spray valves, heaters or PORV operate is based upon the amount of time that actual pressure is off setpoint. Time passing with pressure off setpoint causes the compensated error signal to continue to increase even if the actual pressure deviation is constant. Controller output automatically changes, operating equipment as necessary to bring pressure back to 2235 psig. The master pressure controller is manually operated by setting the output signal to operate the desired equipment. The following table equates equipment operation with controller output and uncompensated error.

ACTION	OUTPUT %	ERROR SIGNAL	NOMINAL VALUE
PORV opens	81.3	+100 psig	2335 psig
PORV closes	75.0	+80 psig	2315 psig
Spray valves fully open	73.4	+75 psig	2310 psig
Spray valves start to open	57.8	+25 psig	2260 psig
Variable heaters off	54.7	+15 psig	2250 psig
Normal operating pressure	50.0	- 0 -	2235 psig
Variable heaters fully on	45.3	–15 psig	2220 psig
Backup heaters off	44.7	–17 psig	2218 psig
Backup heaters on	42.2	–25 psig	2210 psig

Pressurizer Heaters

The PRZR heaters consist of 78 elements mounted vertically in the bottom of the PRZR. The PRZR heaters are divided into four groups identified as A, B, C, and D. Groups A and B each have 21 heater elements and a heat capacity of 485 KW. Groups C and D each have 18 heater elements and a heat capacity of 416 KW. The total heater capacity is 1802 KW.

Groups A, B, and D are called "backup heaters." The backup heaters are energized by closing their power supply breakers in switchgear uEB2, uEB3 and uEB4. Each group has a 3-position maintained (OFF-AUTO-ON) handswitch located on u-CB-05. The backup heater power supply breaker is closed by placing the handswitch in ON or by a low pressure signal from the master pressure controller when the handswitch is in AUTO. Backup heaters in AUTO will also be energized by pressurizer level deviation of 5% above program level. Groups A and B may be operated from the Remote Shutdown Panel.

Group C is the “control heaters,” also called variable or proportional heaters. These heaters operate with variable output controlled by the master pressure controller. A 3-position (OFF-neutral-ON) spring-return to center handswitch operates the control heaters from u-CB-05. During normal operation, the handswitch is taken to the ON position, closing the power supply breaker in switchgear uEB1, and released to the center position. A silicon controlled rectifier (SCR) circuit supplies power to the heater elements using a time-proportioned average output voltage based on the control signal from the master pressure controller. This means that a full 480 VAC is supplied to the heaters in pulses such that the average voltage supplied over time is proportional to the pressure controller output. The control heater power supply breaker will not close automatically.

Safety Injection (SI), low water level in the pressurizer (17%) and bus low voltage automatically trip the backup and control heater power supply breakers. Indication of electrical current to each heater group is displayed on u-CB-05 above the handswitches.

Each PRZR heater breaker is equipped with an anti-pump circuit, whose function is to prevent breaker cycling if close and trip signals are present at the same time. The breaker could fail if rapid, continuous cycling was not prevented. When no close signal is present, an anti-pump relay is de-energized. When the breaker receives a close signal, the anti-pump relay is energized. A seal-in circuit will keep the relay energized as long as a close signal is present. When the anti-pump relay is energized, it prevents closing the breaker again if opened by a trip signal. When all close signals are gone, the anti-pump relay will deenergize and allow the next close signal to attempt breaker closure.

The anti-pump relay affects the operation of the backup heaters after a heater breaker trip from a safety injection (SI). If the anti-pump relay happens to be energized (a “standing” close signal exists from the master controller or level deviation high) at the moment SI is reset, the backup heaters will remain OFF even though no trip is present and they need to be ON. The anti-pump relay must be de-energized before the breaker can close. On the other hand, if no close signal is present when SI is reset, the backup heaters will automatically energize the next time they are needed. A simple way to de-energize the anti-pump relay after SI is reset is to take the handswitch to OFF and then back to the desired position. OFF removes all close signals and de-energizes the anti-pump relay. Keep in mind that the variable heaters will never automatically re-energize after they trip, because the breaker is closed only by the handswitch.

The pressurizer heaters are powered through isolation transformers and distribution panels located in the Train B electrical switchgear rooms, safeguards building 852’ elevation. The distribution panels contain ground detection systems. Ground detection for each heater group consists of a relay that actuates a main control board alarm, and white lights on the distribution panels that indicate voltage difference between each phase and ground.

Examination Outline Cross-Reference	Level	RO	SRO
Rev. Date: 12/22/2014	Tier #	2	n/a
Change: 1	Group #	1	n/a
	K/A #	012 K6.01	n/a
Level of Difficulty: 3	Importance Rating	2.8	n/a

Reactor Protection System: Knowledge of the effect of a loss or malfunction of the following will have on the RPS: Bistables and bistable test equipment

Question 12

Unit 1 plant conditions:

- Reactor power = 45%
- A fault in the RPS circuitry occurs that affects the Bistables for the “Reactor Coolant Low Flow Trip” for ONE Reactor Coolant Loop
- A trip signal for Low Flow in that Reactor Coolant Loop is initiated and processed by the RPS system

Based on the above plant conditions, complete the following statements:

1. For the fault to cause a Reactor Coolant Low Flow Trip signal, the associated Bistables would have ____(1)____.

2. The reactor ____(2)____ trip.

A. (1) energized
(2) would

B. (1) energized
(2) would NOT

C. (1) de-energized
(2) would

D. (1) de-energized
(2) would NOT

Answer: D

The question matches the KA by requiring knowledge of how a failure involving Bistables will affect the RPS system.

Explanation / Plausibility:

The typical RPS BS operates in a “Fail Safe” mode by de-energizing to trip. While a low flow condition (< 90%) in one RCS loop will cause a reactor trip if greater than 48% power (P-8), when < P-8, it requires the condition in two loops.

A. 1st part is incorrect because this BS will de-energize to trip. It is plausible because certain portions of the RCP circuitry in RPS energize to initiate (timers associated with low voltage and under frequency). 2nd part is incorrect because the reactor would not trip. It is plausible because if you were > P-8, it would be correct.

B. 1st part is incorrect but plausible (see A). 2nd part is correct.

C. 1st part is correct. 2nd part is incorrect but plausible (see A).

D. 1st part is correct. 2nd part is correct.

Technical Reference: (Attach if not previously provided including revision number)	Reactor Protection and ESFAS Study Guide

Proposed references to be provided to applicants during examination: _____

Learning Objective: EXPLAIN the instrumentation and controls of the Reactor Protection and Engineered Safeguard Actuation Systems and PREDICT the system response. (LO21.SYS.ES1.OB04)

Question Source:	Bank #	
	Modified Bank#	
	New	X
Question History:	Last NRC Exam	
Question Cognitive Level	Memory or Fundamental Knowledge	
	Comprehension or Analysis	X
10 CFR Part 55 Content:	55.41	41.7
	55.43	n/a

Reactor Protection and ESFAS Study Guide

Bistables

Bistables are devices with only two states, on and off. Bistable status is input to the **SSPS** as either a trip (unsafe) or untripped (safe) condition. The bistable status comes either from bistables (comparators) in the 7300 Protection sets, or from the comparators in the NIS cabinets. When the comparator (bistable) senses that the plant parameter is in a safe condition, the comparator energizes its associated input relay in **SSPS** (the bistable is not tripped). When the comparator senses that the plant parameter is in an unsafe condition, it de-energizes the input relay in **SSPS** (the bistable is tripped). The 7300 Protection sets use 26 or 24 V DC to energize the input relays while the NIS uses 118 V AC to energize the input relays. The NIS uses 24 V DC to energize the Source Range Flux Doubling input relays and these relays are energize to actuate since it is a non-ESF function.

By de-energizing the input relay on a tripped condition, the failsafe criteria discussed earlier is met. When the input relay coil is de-energized, a spring forces the Normally Open (N.O.) contacts on the relay open and the Normally Closed (N.C.) contacts on the relay closed. The Normally Closed contacts of the relay are the contacts that close to indicate a trip (unsafe) condition to the logic portion of **SSPS**. As mentioned previously, the Containment Spray Actuation signal and RWST Auto Swapover signals are the **ESFAS** exceptions to this rule. Their input relays energize when the unsafe (actuation) condition is met. When an input relay is energized, the Normally Open contacts of the input relay are held closed (against the force of the spring). For the energize to actuate trip inputs, the Normally Open contacts of the input relay must close to indicate an actuation (unsafe) condition to the logic portion of **SSPS**. The **P-6** permissive must also energize to be active.

One bistable powers two input relays, one input relay in Train A and one input relay in Train B. The separation between the coil of the input relay and the contacts of the input relay provides the electrical isolation between the two trains, other inputs and external systems.

Reactor Coolant Low Flow Trip

The setpoint for this trip is 90% flow on 2 of 3 channels per loop and is interlocked with **P-7** and **P-8** (P.R. > 48% power on 2/4 channels) (**Figure 11**). If reactor power is greater than the **P-7** setpoint but less than the **P-8** setpoint, and flow is lost in 2 out of 4 coolant loops, then a trip will occur. If reactor power is greater than **P-8** and coolant flow is lost in 1 out of 4 coolant loops then a trip will occur. These trips help prevent reaching DNB conditions.

REACTOR COOLANT LOW FLOW REACTOR TRIP LOGIC

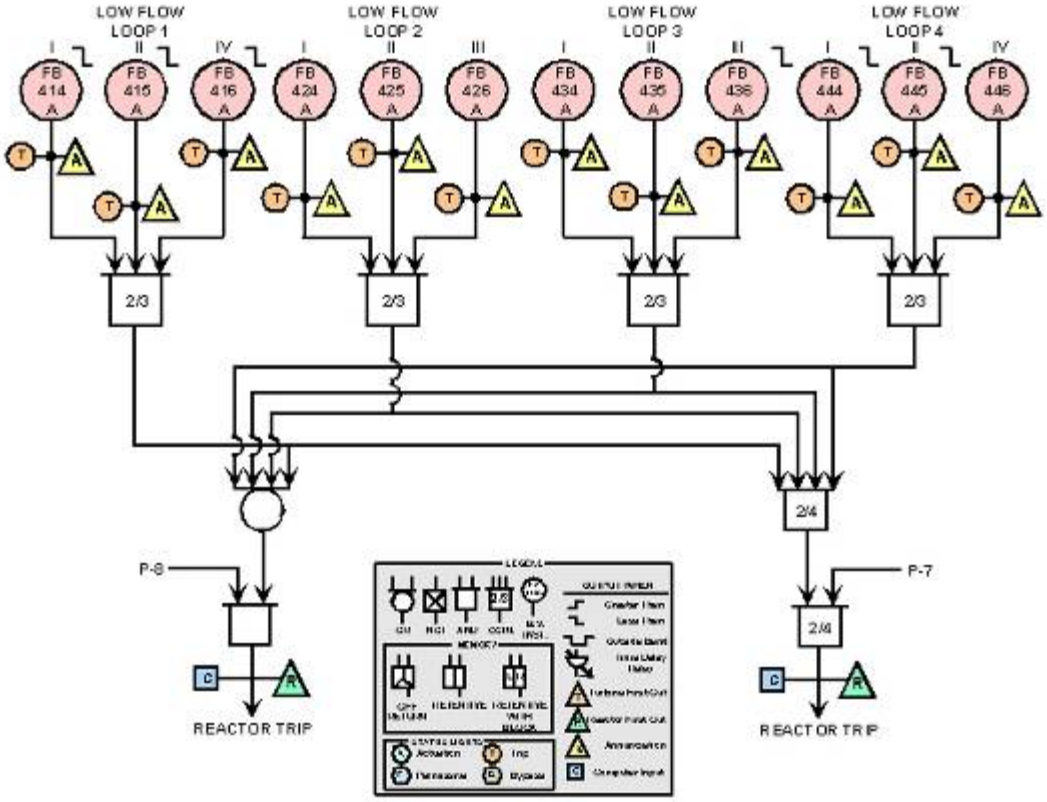

OR51.SYS.CS1.FG11

9-30-94

REACTOR PROTECTION SYSTEM TYPICAL PROTECTION LOOP

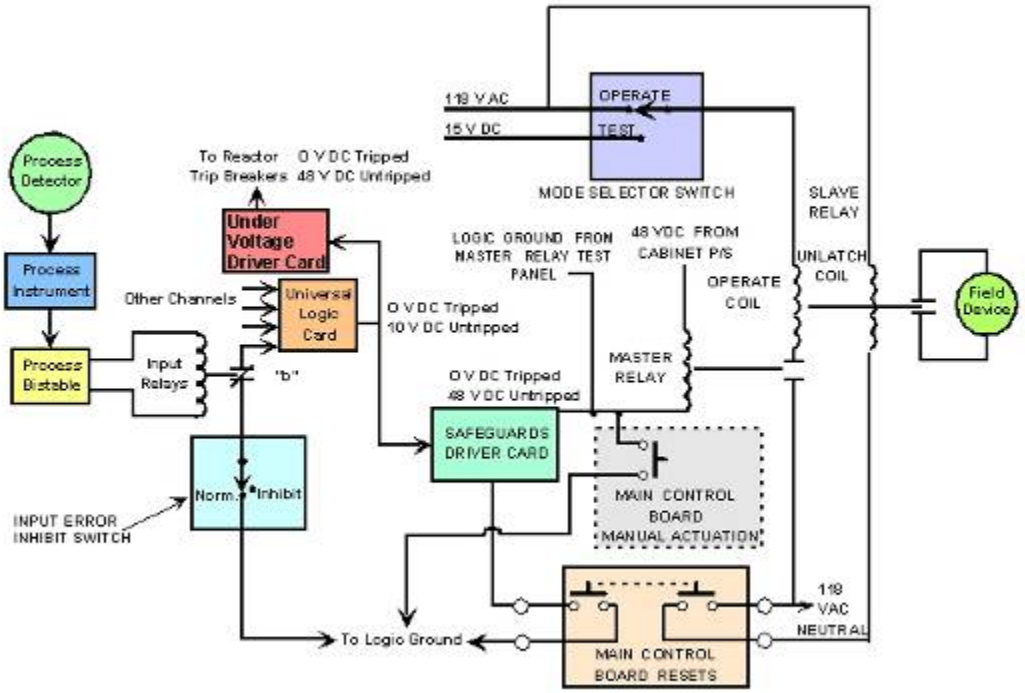

OP51.SYS.ES2.FG04

9-2-04

REACTOR COOLANT PUMP UNDERVOLTAGE TRIP LOGIC

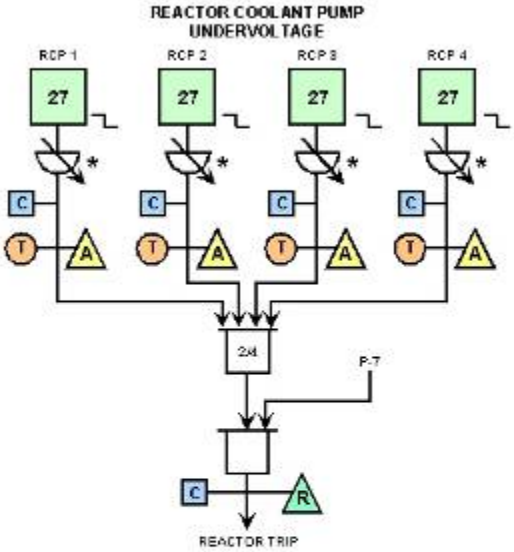

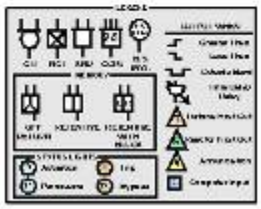

* Since the timer is not failsafe (it energizes to close the trip contact after the UV has been in long enough), a separate relay was added to make the circuit failsafe.

REACTOR COOLANT PUMP UNDERFREQUENCY TRIP LOGIC

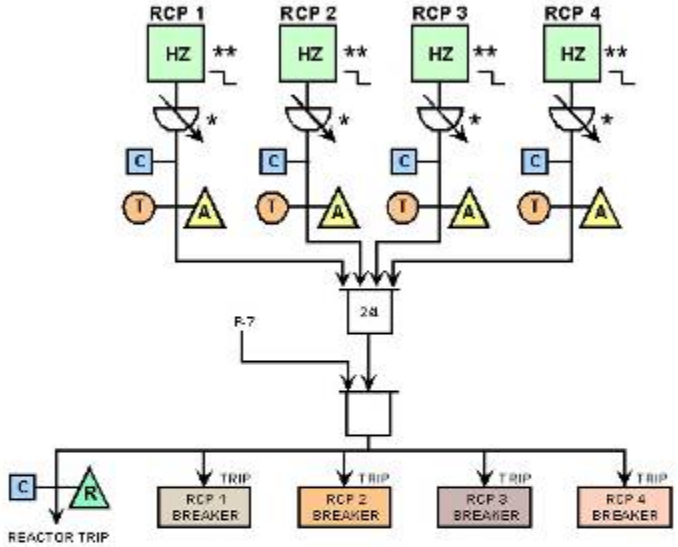

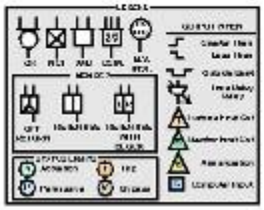

* Since the timer is not failsafe (it energizes to close the trip contact after the UV has been in long enough), a separate relay was added to make the circuit failsafe.

** The UF relay needs voltage from downstream of the RCP breaker to make it work. It is not failsafe and the signal will clear after the RCP breaker is open.

Examination Outline Cross-Reference	Level	RO	SRO
Rev. Date: 12/22/2014	Tier #	2	n/a
Change: 1	Group #	1	n/a
	K/A #	013 K6.01	n/a
Level of Difficulty: 3	Importance Rating	2.7	n/a

Engineered Safety Features Actuation System: Knowledge of the effect of a loss or malfunction on the following will have on the ESFAS: Sensors and detectors

Question 13

Unit 1 plant conditions:

- Reactor power = 50%
- Tave on one RCS loop has failed low
- While investigating the failed instrument, maintenance inadvertently trips the reactor

Based on the above conditions, complete the following statements:

1. One additional Loop Tave signal below setpoint __(1)__ required to initiate a Feedwater isolation signal.

2. If a Feedwater Isolation signal is generated due to P-4 being present and the required number of Loop Tave signals, the MFW pumps __(2)__ trip.

A. (1) is
(2) will

B. (1) is
(2) will NOT

C. (1) is NOT
(2) will

D. (1) is NOT
(2) will NOT

Answer: B

This question matches the KA by requiring knowledge of how an instrument failure will affect the ES system.

Explanation / Plausibility:

In the Feedwater Isolation Logic, a reactor trip (P-4) with 2/4 RCS loops at 564°F and decreasing will isolate the SGs but will not trip the MFW pumps. FW Isolation due to a high SG level on 1/4 SGs will trip the FW pumps.

A. 1st part is correct. FWI on P4 requires Tave < 564°F on 2/4 loops. 2nd part is incorrect because FWI due to P4 with the required Tave signals does not Trip the MFW pumps. It is plausible because a FWI signal due to SG level does.

B. 1st part is correct. 2nd part is correct.

C. 1st part is incorrect because it requires Tave < 564°F on 2/4 loops coupled with P-4 to initiate the FWI. It is plausible because in only requires a high SG level in 1/4 loops to initiate a FWI. 2nd part is incorrect but plausible (see A).

D. 1st part is incorrect but plausible (see C). 2nd part is correct.

Technical Reference: (Attach if not previously provided including revision number)	Reactor Protection and ESFAS Study Guide

Proposed references to be provided to applicants during examination: _____

Learning Objective: EXPLAIN the instrumentation and controls of the Reactor Protection and Engineered Safeguard Actuation Systems and PREDICT the system response. (LO21.SYS.ES1.OB04)

Question Source:	Bank #	
	Modified Bank#	
	New	X
Question History:	Last NRC Exam	
Question Cognitive Level	Memory or Fundamental Knowledge	
	Comprehension or Analysis	X
10 CFR Part 55 Content:	55.41	41.7

55.43 n/a

ESF ACTUATION SIGNALS

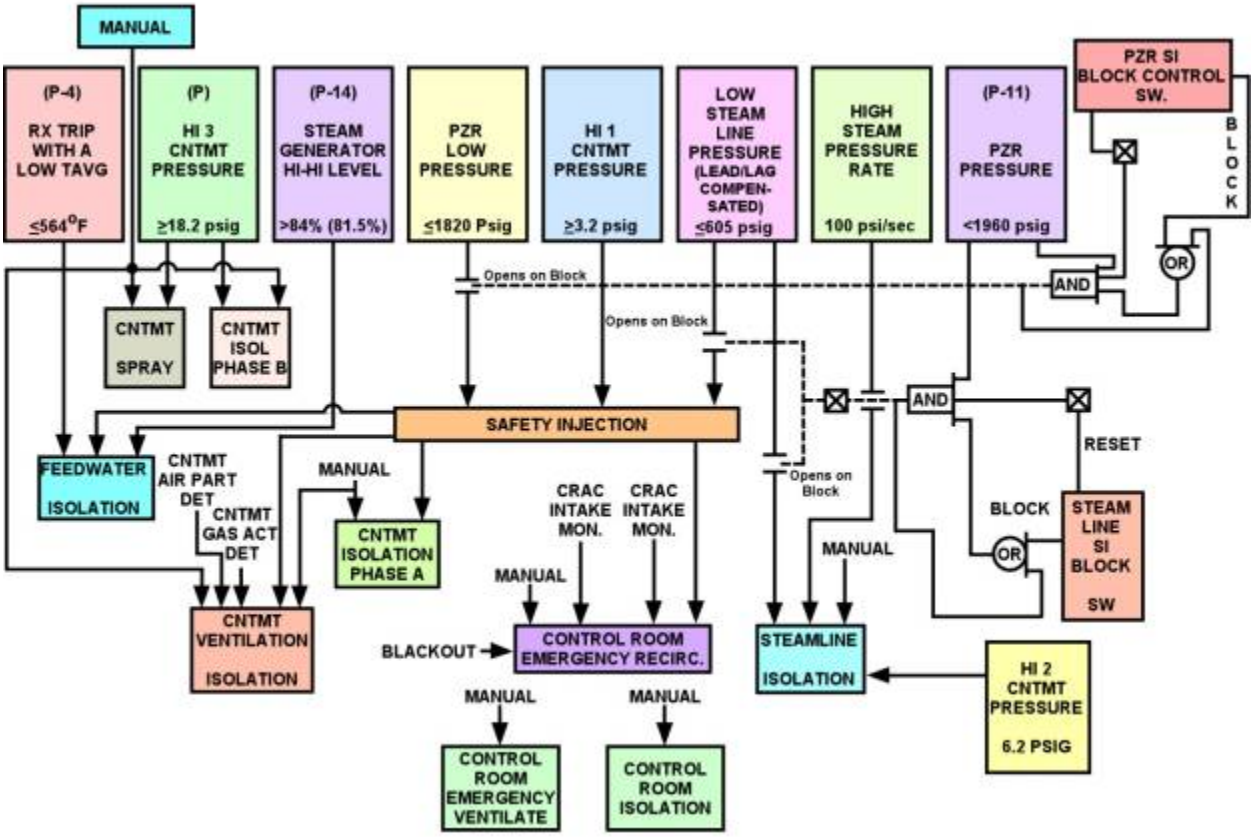

OP51.SYS.ES1.FG22 3-15-06

TURBINE TRIP AND (MAIN) FEEDWATER ISOLATION SIGNAL

The turbine trip and feedwater isolation signal is actuated by an **SI** or **P-14**. Both of these signals will cause the Main Turbine and both Feedwater Pump turbines to trip and cause feedwater isolation (**Figure 25**). In the case of the **P-14** signal, these actions are taken to prevent overfilling the steam generators, damaging the turbine due to water in the steam lines and causing an excessive cooldown of the RCS due to excessive feedwater flow. In the case of an SI signal, feedwater is isolated and the turbine tripped to prevent an excessive cooldown of the primary system. The feedwater isolation signal shuts various valves in the Main Feedwater System terminating main feedwater flow to the Steam Generators (**See Table 6**).

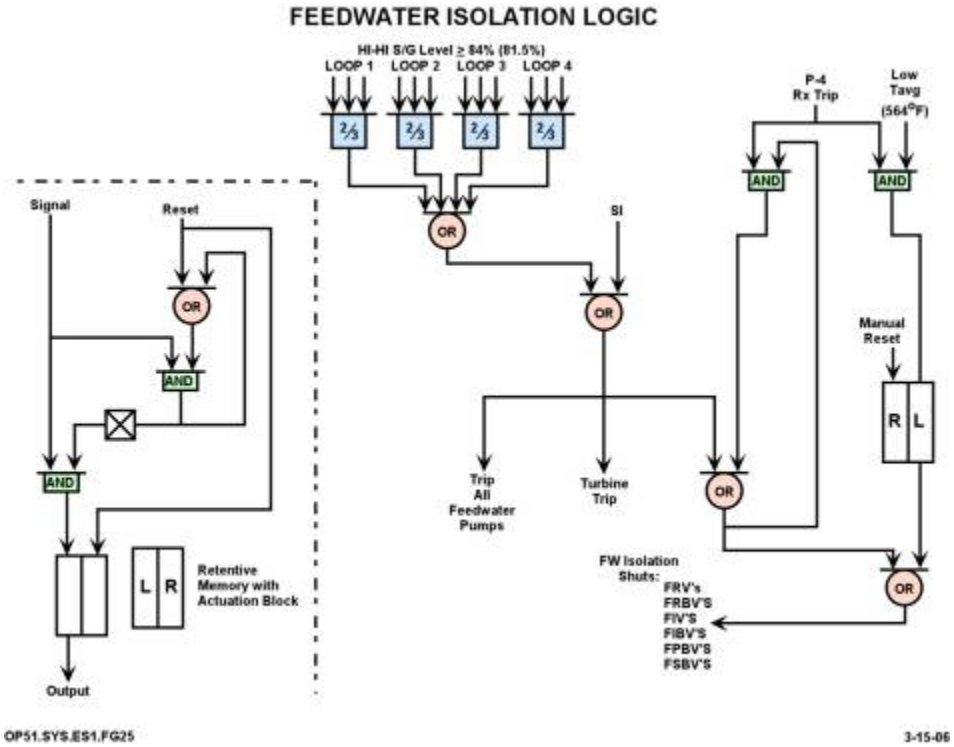

Figure 25 - Feedwater Isolation Logic

Per T.S. bases, only the trip of the main turbine and the "feedwater isolation" are required by the LCO. The trip of the MFW pumps (including the closure of their discharge valves) and the closure of the MFW control valves and the bypass feedwater control valves are not required by the LCO.

A **P-4** and Low Tavg signal will only cause feedwater isolation. (A **P-4** signal by itself will cause the main turbine to trip.) The **P-4** and Low Tavg signal is included in this discussion only because it causes all the same feedwater valves to isolate. The **P-4** and Low Tavg function is not required by the **P-4** LCO. The **P-4** and Low Tavg function is not credited by accident analyses.

Origin:

- Safety Injection signal

- High S/G level, **P-14** - 2 of 3 NR level transmitters on 1 of 4 S/G at 84%;U-1 (81.5% U-2) increasing.
- Reactor trip, **P-4** with low Tavg on 2 of 4 loops at 564°F and decreasing. (Feedwater isolation only, it does not trip Main or Feedwater pump turbines)

Examination Outline Cross-Reference	Level	RO	SRO
Rev. Date: 12/22/2012	Tier #	2	n/a
Change: 1	Group #	1	n/a
	K/A #	013 A2.03	n/a
Level of Difficulty: 4	Importance Rating	4.4	n/a

Engineered Safety Features Actuation System: Ability to (a) predict the impacts of the following malfunctions or operations on the ESFAS; and (b) based Ability on those predictions, use procedures to correct, control, or mitigate the consequences of those malfunctions or operations: Rapid depressurization.

Question 14

Unit 1 plant conditions:

0800:

- Reactor power = 100%
- Main Steam pressure = 950 psig decreasing
- Reactor was manually tripped
- EOP 0.0A REACTOR TRIP OR SAFETY INJECTION has been initiated

0801:

- Main Steam pressure = 800 psig decreasing

0802:

- Main Steam pressure = 700 psig decreasing

0803:

- Main Steam pressure = 600 psig decreasing

0804:

- 1SG 1 Steam pressure = 550 psig decreasing

1. The earliest time at which the Main Steam Isolation signal would have actuated is ____(1)____.

2. EOP-0.0A ____(2)____ direct AFW to be throttled prior to transfer to EOP-2.0A, Faulted Steam Generator Isolation

A. (1) 0801
(2) does

B. (1) 0801
(2) does NOT

C. (1) 0803
(2) does

D. (1) 0803
(2) does NOT

Answer: C

The question matches the KA by requiring knowledge of how the ES system will react to rapid system depressurization and how procedures are used to mitigate the depressurization.

Explanation / Plausibility:

1 Main Steam line < 605 psig actuates MSIL.

EOP 0.0A directs the operators to isolate Main Steam Lines. Then if Tave is not trending towards 557 ^{O}F, it directs throttling feedwater to no less than 460 gpm.

A. 1st part is incorrect because it does not yet meet the pressure requirement for isolation. It is plausible because it has decreased below 100 psig which is part of the rate logic when below P-11 when SI is blocked. 2nd part is correct per EOP 0.0 Step 9.

B. 1st part is incorrect but plausible (see A). 2nd part is incorrect because EOP 0.0 does direct throttling of feedwater. It is plausible because in the previous step, it directs closing the MSIVs and feedwater is not the reason for the cooldown.

C. 1st part is correct. 2nd part is correct.

D. 1st part is correct. 2nd part is incorrect but plausible (see B).

Technical Reference: (Attach if not previously provided including revision number)	EOP 0.0A Reactor Trip or Safety Injection
	IPO-005A Plant Cooldown From Hot Standby to Cold Shutdown
	Reactor Protection and ESFAS Study Guide

Proposed references to be provided to applicants during examination: _____

Learning Objective: **EXPLAIN** the instrumentation and controls of the Reactor Protection and Engineered Safeguard Actuation Systems and **PREDICT** the system response. (LO21.SYS.ES1.OB04)

Question Source:	Bank #	
	Modified Bank#	
	New	X
Question History:	Last NRC Exam	
Question Cognitive	Memory or Fundamental Knowledge	

Level			
	Comprehension or Analysis		X
10 CFR Part 55 Content:	55.41	41.5	
	55.43	n/a	

STEAMLINE ISOLATION SIGNAL

The Steam Line Isolation signal shuts valves in the main steam lines. This prevents the continuous, uncontrolled blowdown of more than one steam generator and thereby an excessive uncontrolled RCS cooldown (**Figure 27**).

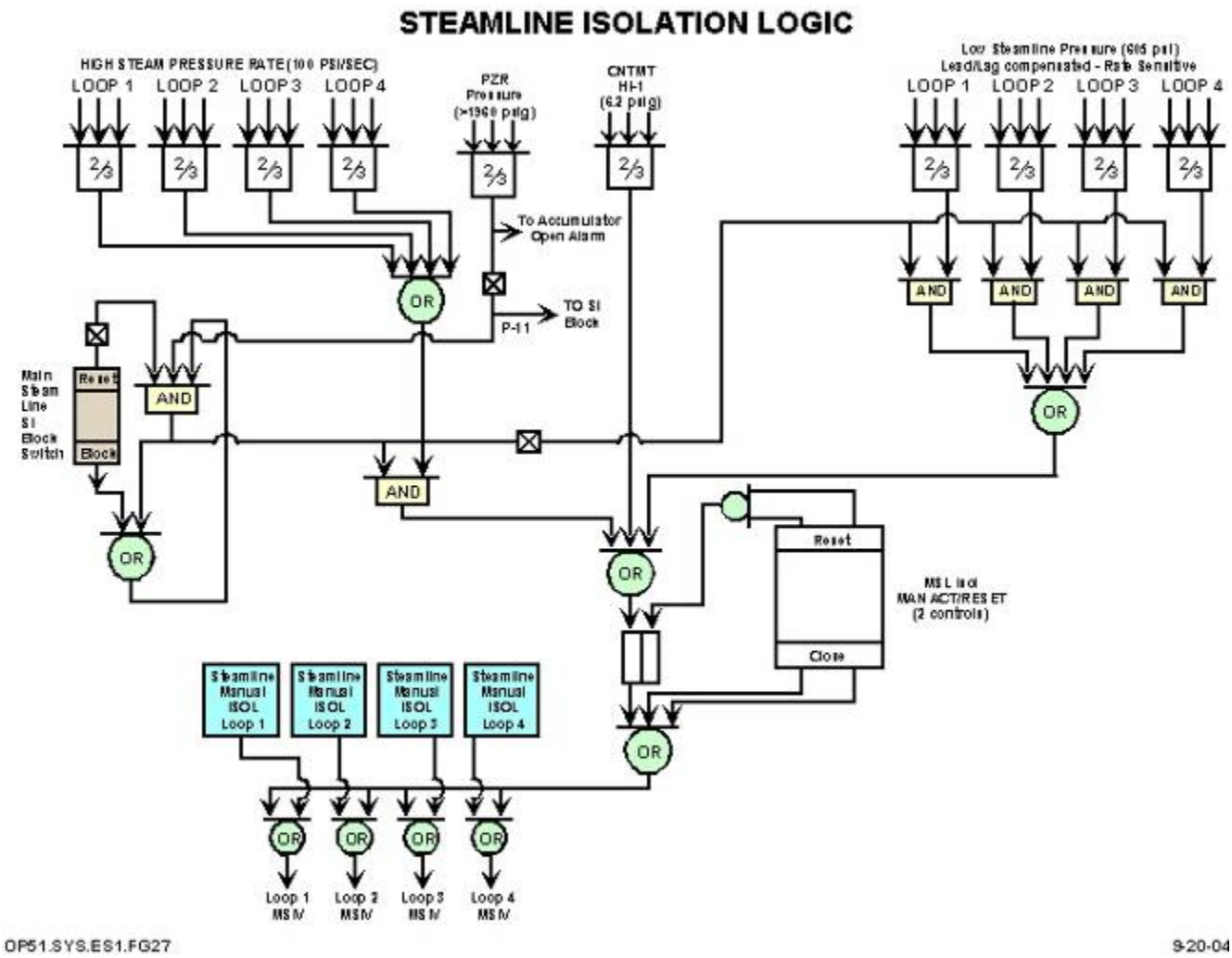

Figure 27 - Steamline Isolation Logic

Origin:

- Manual - 1 of 2 MCB handswitches. (These switches only go to the individual MSIVs close circuits and do not go to SSPS on actuation.)
- Low steam line pressure - 2 of 3 pressure transmitters on 1 of 4 steam lines at 605 psig decreasing, blockable below **P-11**. Blocking of the Low Steam Line Pressure **SI** enables the

High Steam Negative Rate for steamline isolation. The steam line pressure signal is lead/lag compensated so that it is rate sensitive (50 second lead time constant and 5 second lag time constant).

- Containment pressure (Hi-2) - 2 of 3 pressure transmitters at 6.2 psig increasing.
- Negative steam line pressure rate 2 of 3 PT on 1 of 4 steam lines at 100 psi decreasing (with a 50 sec time constant in the rate/lag circuit) with low steam line pressure SI and steam line isolation signal blocked.(Any decrease > 2 psi/sec may actuate this signal. At 2 psi/ sec it would take about 250 seconds to actuate. At > 2 psi/sec it would take a shorter time to actuate.)

STEP	ACTION/EXPECTED RESPONSE	RESPONSE NOT OBTAINED
1	Verify Reactor Trip:	
	a. Verify the following: • Reactor trip breakers - AT LEAST ONE OPEN -AND- • Neutron flux - DECREASING	a. Manually trip reactor from both trip switches. **IF** reactor will not trip, **THEN** momentarily de-energize 480V normal switchgear 1B3 **AND** 1B4. **IF** reactor **NOT** tripped, **THEN** go to FRS-0.1A, RESPONSE TO NUCLEAR POWER GENERATION/ATWT, Step 1.
	b. All control rod position rod bottom lights - ON	
2	Verify Turbine Trip: • All HP turbine stop valves - CLOSED	Manually trip turbine. **IF** the turbine will **NOT** trip, **THEN** pull-out all EHC fluid pumps. **IF** turbine still **NOT** tripped, **THEN** close or verify closed main steamline isolation valves.
3	Verify Power To AC Safeguards Busses:	
	a. AC safeguards busses - AT LEAST ONE ENERGIZED • AC safeguards bus voltage-6900 Volts(6500-7100 Volts)	a. Go to ECA-0.0A, LOSS OF ALL AC POWER, Step 1.
	b. AC safeguards busses - BOTH ENERGIZED	b. Restore power to de-energized AC safeguards bus per ABN-601, RESPONSE TO A 138/345 KV SYSTEM MALFUNCTION or ABN-602, RESPONSE TO A 6900/480 VOLT SYSTEM MALFUNCTION when time permits.

STEP	ACTION/EXPECTED RESPONSE	RESPONSE NOT OBTAINED
4	Check SI Status:	
	a. Check If SI Is Actuated: • SI actuation as indicated on the First Out Annunciator 1-ALB-6C • SI Actuated blue status light - ON	a. Check if SI is required: • Steam Line Pressure less than 610 psig. • Pressurizer Pressure less than 1820 psig. • Containment Pressure greater than 3.0 psig. **IF** SI is required, **THEN** manually actuate SI from either handswitch. **IF** SI is **NOT** required, **THEN** go to EOS-0.1A, REACTOR TRIP RESPONSE, Step 1.
	b. Verify Both Trains SI Actuated: • SI Actuated blue status light - ON **NOT** FLASHING	b. Manually Actuate SI.

STEP	ACTION/EXPECTED RESPONSE	RESPONSE NOT OBTAINED

CAUTION: A Safety Injection actuation will affect normal egress from the Containment Building. Attachment 9 of this procedure provides instructions to evacuate personnel from the Containment during a Safety Injection actuation.

NOTE: Attachment 2 is required to be completed before FRGs are implemented.

5	Initiate Proper Safeguards Equipment Operation Per Attachment 2	
6	Verify AFW Alignment:	
	a. MDAFW Pumps - RUNNING	a. Manually start pump(s).
	b. Turbine Driven AFW Pump - RUNNING IF NECESSARY	b. Manually open steam supply valve(s).
	c. AFW total flow - GREATER THAN 460 GPM	c. Check narrow range levels and perform the following: **IF** narrow range level greater than 43%(50% FOR ADVERSE CONTAINMENT) in any SG, **THEN** control feed flow to maintain narrow range level **AND** go to Step 6d. **IF** narrow range level less than 43%(50% FOR ADVERSE CONTAINMENT) in all SGs, **THEN** manually start pumps and align valves as necessary.
	d. AFW valve alignment - PROPER ALIGNMENT	d. Manually align valve(s) as necessary.

STEP	ACTION/EXPECTED RESPONSE	RESPONSE NOT OBTAINED
* 7	Verify Containment Spray Not Required:	
	a. Containment pressure - HAS REMAINED LESS THAN 18.0 PSIG • 1-ALB-2B window 1-8, CS ACT - NOT ILLUMINATED -AND- • 1-ALB-2B window 4-11, CNTMT ISOL PHASE B ACT - NOT ILLUMINATED -AND- • Containment Pressure - LESS THAN 18.0 PSIG	a. Perform the following: 1) Verify Containment Spray **AND** Phase B Actuation initiated. **IF NOT**, **THEN** manually actuate. 2) Verify appropriate MLB indication for CNTMT SPRAY (BLUE WINDOWS) **AND PHASE** B (ORANGE WINDOWS). **IF valves NOT** aligned, **THEN** manually align valve(s) as appropriate. (Refer to Attachment 6 as necessary). 3) Verify containment spray **flow.** 4) Ensure CHEM ADD TK DISCH VLVs - OPEN • 1-HS-4752 • 1-HS-4753 5) Stop all RCPs. 6) Go to Step 8.
	b. Verify containment spray heat exchanger out valves - CLOSED	b. Manually close valve(s).
	c. Verify containment spray pumps - RUNNING	c. Manually start pump(s).

STEP	ACTION/EXPECTED RESPONSE	RESPONSE NOT OBTAINED
* 8	Check If Main Steamlines Should Be Isolated:	
	a. Verify the following: • Containment pressure - GREATER THAN 6.0 PSIG -OR- • Steamline pressure - LESS THAN 610 PSIG	a. Go to Step 9.
	b. Verify main steam isolation complete: • Main Steam isolation valves • Before MSIV drippot isolation valves	b. Manually or locally close valve(s).

STEP	ACTION/EXPECTED RESPONSE	RESPONSE NOT OBTAINED
* 9	Check RCS Temperature - • RCS AVERAGE TEMPERATURE STABLE AT OR TRENDING TO 557°F	IF temperature less than 557°F and decreasing, THEN perform the following: a. Stop dumping steam. b. IF cooldown continues, THEN reduce total AFW flow as necessary to minimize the cooldown: • Maintaining a minimum of 460 gpm UNTIL narrow range level greater than 43% (50% for ADVERSE CONTAINMENT) in at least one SG. • As necessary to maintain SG levels WHEN narrow range level greater than 43% (50% for ADVERSE CONTAINMENT) in at least one SG. • IF Turbine Driven AFW pump is not required to maintain greater than 460 gpm flow, THEN stop Turbine Driven AFW pump. c. IF cooldown continues, THEN close main steamline isolation valves. IF temperature greater than 557°F and increasing, THEN dump steam: • to condenser using steam dumps -OR- • to atmosphere using SG atmospherics

STEP	ACTION/EXPECTED RESPONSE	RESPONSE NOT OBTAINED
10	Check PRZR Valve Status:	
	a. PRZR Safeties - CLOSED	a. Go to EOP-1.0A, LOSS OF REACTOR OR SECONDARY COOLANT, Step 1.
	b. Normal PRZR spray valves - CLOSED	b. IF PRZR pressure less than 2235 psig, THEN manually close valve(s) as necessary. IF valve(s) can NOT be closed, THEN stop RCP(s) as necessary to stop spray flow.
	c. PORVs - CLOSED	c. IF PRZR pressure less than PORV open setpoint (2335 psig OR PORV LTOP Setpoint), THEN manually close PORV(s). IF any valve can NOT be closed, THEN manually close its block valve. IF block valve can NOT be closed, THEN go to EOP-1.0A, LOSS OF REACTOR OR SECONDARY COOLANT, Step 1.
	d. Power to at least one block valve - AVAILABLE	d. Go to Step 11.
	e. Block valves - AT LEAST ONE OPEN	e. Open one block valve unless it was closed to isolate an open PORV.

STEP	ACTION/EXPECTED RESPONSE	RESPONSE NOT OBTAINED
11	Check If RCPs Should Be Stopped:	
	a. RCS subcooling - LESS THAN 25°F (55°F FOR ADVERSE CONTAINMENT)	a. Go to Step 12.
	b. ECCS pumps - AT LEAST ONE RUNNING • CCP -OR- • SI pump	b. Go to Step 12.
	c. Stop all RCPs.	
12	Check If Any SG Is Faulted:	
	a. Check pressures in all SGs: • ANY SG PRESSURE DECREASING IN AN UNCONTROLLED MANNER -OR- • ANY SG COMPLETELY DEPRESSURIZED	a. Go to Step 13.
	b. Go to EOP-2.0A, FAULTED STEAM GENERATOR ISOLATION, Step 1.	

Examination Outline Cross-Reference	Level	RO	SRO
Rev. Date: 12/22/2014	Tier #	2	n/a
Change: 1	Group #	1	n/a
	K/A #	022 K1.02	n/a
Level of Difficulty: 2	Importance Rating	3.7	n/a

Containment Cooling System: Knowledge of the physical connections and/or cause-effect relationships between the CCS and the following systems: SEC/remote monitoring systems

Question 15

Unit 1 initial plant conditions:

- Reactor power = 100%
- Containment Air Cooling and Recirculation Fans switches are in AUTO

Current plant conditions

- A manual SI was initiated due to an RCS leak
- Containment Air Cooling and Recirculation Fans tripped

Based on the above plant conditions, complete the following statements:

1. If either Containment Air Cooling and Recirculation Fan switch were rotated to the START position, the fan ___(1)____ start.

2. If control were transferred to the Remote Shutdown Panel, the fans ___(2)____ be started with the SI signal still present.

A. (1) would
(2) could

B. (1) would
(2) could NOT

C. (1) would NOT
(2) could

D. (1) would NOT
(2) could NOT

Answer: C

The question matches the KA by requiring knowledge of the effect of system conditions on the Containment Ventilation system when control is shifted to a remote location.

Explanation / Plausibility:

A. 1st part is incorrect because the fan would not start. It is plausible because to start the fan, you are taking it out of AUTO position temporarily. 2nd part is correct. When control is shifted to the Remote Shutdown Panel, the auto functions are taken out of the control circuit.

B. 1st part is incorrect but plausible (see A). 2nd part is incorrect because you can start the fans remotely with an SI signal present. It is plausible because it IS a safety signal.

C. 1st part is correct. 2nd part is correct.

D. 1st part is incorrect but plausible (see A). 2nd part is incorrect but plausible (see B).

Technical Reference: (Attach if not previously provided including revision number)	Containment Ventilation Study Guide LO21.SYS.CL1

Proposed references to be provided to applicants during examination: _____

Learning Objective: **EXPLAIN** the normal, abnormal and emergency operation of the Containment Ventilation system. (LO21.SST.HV1.OB06)

Question Source:	Bank #	
	Modified Bank#	
	New	X
Question History:	Last NRC Exam	
Question Cognitive Level	Memory or Fundamental Knowledge	
	Comprehension or Analysis	X
10 CFR Part 55 Content:	55.41	41.7
	55.43	n/a

Containment Air Cooling and Recirculation

The Containment Air Cooling and Recirculation Fans are controlled by handswitches on u-CB-03. These fans are automatically stopped by a Safety Injection signal, and automatically started by the Blackout Sequencer. When the Containment Air Cooling and Recirculation Fan handswitch is taken to "Start," the associated motor operated chilled water valve will open and the air operated fan discharge damper will open. The chilled water valve and fan discharge damper will close when the fan handswitch is taken to "Stop." Control of these fans may be transferred to the Remote Shutdown Panel. When Remote Shutdown Panel control is selected, an alarm alerts the Control Room, and the Safety Injection trip and Blackout Sequencer start are defeated.

Each of the Containment Air Cooling and Recirculation Fans have a temperature element located on the discharge of the cooler and fan. The temperature is displayed in the control room on a recorder. The electronics of the recorder also activate an alarm on u-ALB-3B, "ANY CNTMT FN CLR FN DISCH TEMP HI," at a setpoint of 120°F. This is a common alarm for any of the fan coolers and the individual fan can be determined using the recorder.

The fans have a pressure indicating switch to detect the ΔP across the fan. This pressure switch will actuate the Containment Fan Cooler Fan ΔP low alarm on u-ALB-3A for the associated fan. The alarm setpoint is 1.0" H_2O, enabled thirty (30) seconds after fan start for the respective fan. The pressure switch has local indication but a Containment entry is required.

Associated with Containment Air Cooling and Recirculation are the Condensate Measuring Tanks, which collect drainage from the cooling units. When excessive condensation or leakage from the cooling coils is collected, a level switch will actuate an alarm. u-ALB-2B has a condensate level high alarm for the Condensate Measuring Tank associated with cooling units 1 & 2 and another for the Condensate Measuring Tank associated with cooling units 3 & 4. The level instruments calculate the rate of level change in the tanks and input this to condensate fill rate high alarms on u-ALB-2B, and the Fan Cooler Condensate Flow recorder on u-CB-03. The condensate fill rate alarm has a variable setpoint that is adjusted based on the fill rate during normal conditions. The setpoint is determined by ODA-401-5.

Examination Outline Cross-Reference	Level	RO	SRO
Rev. Date: 12/22/2014	Tier #	2	n/a
Change: 2	Group #	1	n/a
	K/A #	026 A3.01	n/a
Level of Difficulty: 3	Importance Rating	4.3	n/a

Containment Spray: Ability to monitor automatic operation of the CSS, including: Pump starts and correct MOV positioning

Question 16

Unit 1 has experienced a LOCA with containment pressure trending up as follows:

0800 = 3.0 psig
0801 = 6.0 psig
0802 = 10 psig
0804 = 16 psig
0806 = 20 psig

Based on the above information, which of the above times is the <u>earliest</u> time that:

1. The Containment Spray Pumps will have an automatic start signal?

2. The Containment Spray Heat Exchanger Outlet valves (HV-4776 & HV-4777) will have an open signal?

(Consider operation based only on actuation from containment pressure)

A. (1) 0800
   (2) 0804

B. (1) 0800
   (2) 0806

C. (1) 0801
   (2) 0804

D. (1) 0801
   (2) 0806

Answer: D

This question matches the KA by requiring knowledge of automatic setpoints of Containment Spray System Components.

Explanation / Plausibility:

A. 1st part is incorrect because the Containment pressure setpoint that initiates Safety Injection is HI I (3.2 psig). The initiation of SI is what starts the Containment Spray pumps and operates them in recirc. This criteria has not been met at 0800. It is plausible because containment pressure is close to the HI I setpoint (the applicant has to know the setpoint). 2nd part is incorrect because the HX outlet valves do not open until a HI III signal (18.2 psig) is present. This is what actually starts flow to the spray nozzles. It is plausible because HI II signal is 6.2 psig. The applicant has to know which signal causes component actuation.

B. 1st part is incorrect but plausible (see A). 2nd part is correct. The valves will open when Containment pressure reaches 18.2 psig therefore, at 0806 this criteria has already been met.

C. 1st part is correct. 2nd part is incorrect but plausible (see A).

D. 1st part is correct. 2nd part is correct.

Technical Reference: (Attach if not previously provided including revision number)	Containment Spray Study Guide LO21.SYS.CT1

Proposed references to be provided to applicants during examination: _____

Learning Objective:	EXPLAIN the normal, abnormal and emergency operation of the Containment Spray system. (LO21.SYS.CT1.OB05)

Question Source:	Bank #	
	Modified Bank#	
	New	X
Question History:	Last NRC Exam	
Question Cognitive Level	Memory or Fundamental Knowledge	
	Comprehension or Analysis	X

10 CFR Part 55 Content:	55.41	41.7
	55.43	n/a

CONTAINMENT SPRAY STUDY GUIDE

MAJOR FLOWPATH

STANDBY (FIGURE 2)

During operation in Modes 1-4, the Containment Spray System is aligned in standby readiness to actuate if required. Four pumps (2/train) are aligned to take suction from the RWST via two train related suction valves. The pumps are off with their handswitches maintained in the AUTO position. Heat exchanger outlet valves are in AUTO and closed. The chemical addition tank is isolated by maintaining the motor operated outlet valves closed with their handswitches in AUTO. Chemical addition tank air operated outlet valves are open with their handswitches also in AUTO. The four Containment Spray pump recirculation valves (1/pump) are open due to low pump flow with their hand switches in AUTO.

SAFETY INJECTION (FIGURE 3)

After safety injection actuation, Containment Spray pumps start and run in recirculation. The recirculation flow path starts at the RWST, through the RWST suction valves, each pump, and back to the RWST via the pump related recirculation valve. The recirculation line originates between the pump and heat exchanger thus recirculation flow is not cooled by the heat exchanger. A chemical eductor taps off after the pumps and flow is returned to the suction lines. Although containment spray flows through the eductor, chemical addition tank motor operated outlet valves are closed resulting in no flow from the chemical addition tank.

INJECTION (FIGURE 4)

Once HI-3 containment pressure is reached (≥ 18.2 psig), indicating a need for Containment Spray flow, a P signal is generated and the Containment Spray System is automatically transferred to the injection mode of operation. Water is drawn from the RWST and through the pump. The heat exchanger outlet valve begins to open resulting in water spray into containment. As the heat exchanger outlet valves come off of their closed seats a close signal is sent to the recirculation valves. Flow is then routed through the heat exchanger, (no cooling required) into containment, up the risers, and out the spray nozzles. The chemical additive tank motor operated outlet valves open and the eductor begins pulling the concentrated chemicals from the tank and injecting them into the suction of its associated pump. Once a low level is reached in the chemical addition tank, the chemical addition tank motor operated outlet valves close or, if this fails to happen, a lo-lo level (≤ 5.82%) will close the air operated outlet valves, terminating the chemical injection.

RECIRCULATION (FIGURE 5)

The Containment Spray System continues to draw water out of the RWST until level reaches a point (≤ 6%) where the operator is directed by procedure to manually swap the pump suctions over to the Containment sumps by opening the Containment sump suction valves and closing the RWST suction valves. Water is then drawn from the containment sumps through the pumps, discharged through the heat exchangers (cooling required) into Containment, up the risers, and out the spray nozzles.

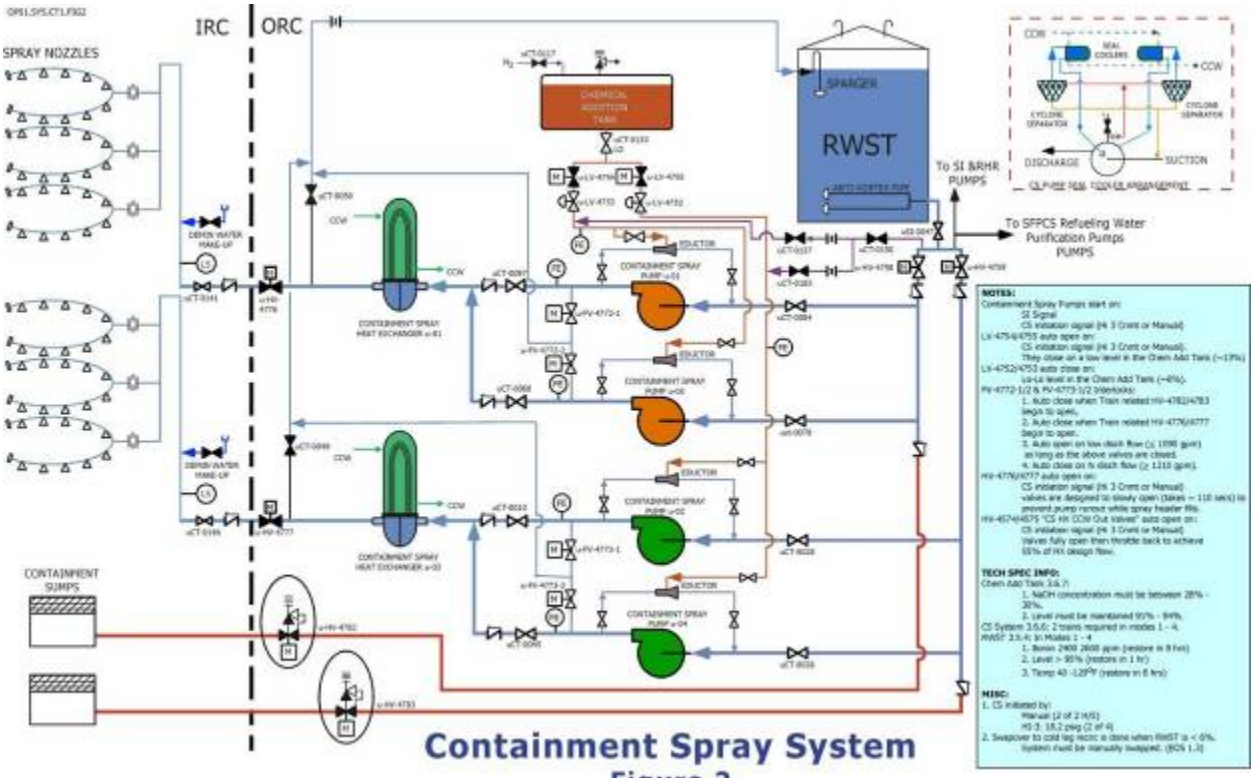

Containment Spray System

Figure 2

SAFEGUARDS ACTUATION LOGIC

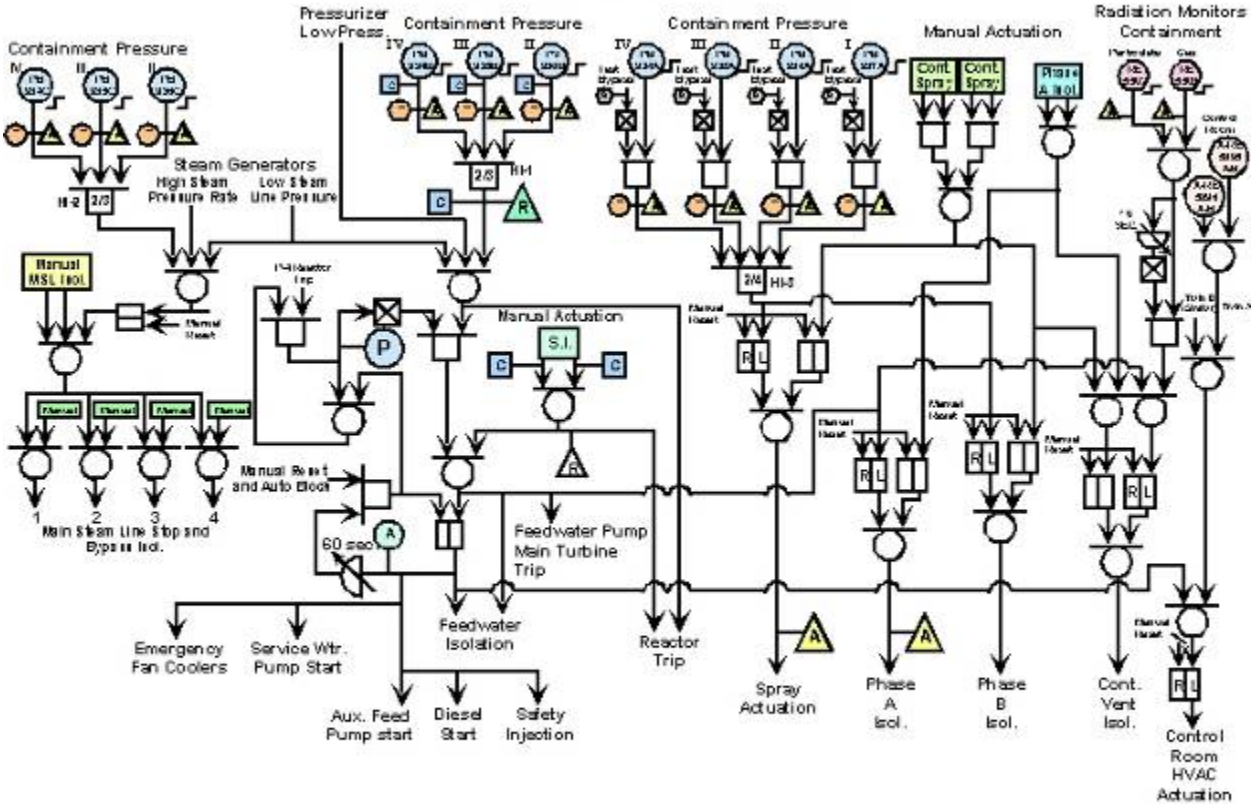

OP51.SYS.ES1.FG23

9-20-04

Examination Outline Cross-Reference	Level	RO	SRO
Rev Date: 12/22/2014	Tier #	2	n/a
Change: 2	Group #	1	n/a
	K/A #	039 K5.05	n/a
Level of Difficulty: 3	Importance Rating	2.7	n/a

Main and Reheat Steam: Knowledge of the operational implications of the following concepts as they apply to the MRSS: Bases for RCS cooldown limits

Question 17

Unit 1 plant conditions:

0800:

- Reactor is shutdown
- RCS Cooldown is in progress
- Tave = 550°F

0830:

- Steam Dump valves have been closed
- Tave = 490°F

Based on the above plant conditions, complete the following:

1. During the cooldown, the limit on the cooldown rate is based on limiting stress on the ____(1)____ reactor vessel wall.

2. At 0830, the cooldown rate limit ____(2)____ been violated.

A. (1) inner
(2) has NOT

B. (1) inner
(2) has

C. (1) outer
(2) has NOT

D. (1) outer
(2) has

Answer: A

This question matches the KA by requiring knowledge of what the cooldown rates are based on

Explanation / Plausibility:

A. 1st part is correct. On a cooldown, the inner vessel wall is limiting. 2nd part is correct. The cooldown limit is 100°F ***IN*** one hour.

B. 1st part is correct. 2nd part is incorrect because the cooldown rate limit has not been violated. It is plausible because the rate at which the plant has cooled down is 120°F per hour for ½ hour.

C. 1st part is incorrect because on a cooldown, the inner vessel wall in limiting. It is plausible because on a heatup, the outer vessel wall would be limiting. 2nd part is correct.

D. 1st part is incorrect but plausible (see C). 2nd part is incorrect but plausible (see B).

Technical Reference: (Attach if not previously provided including revision number)	Steam Dump Study Guide
	Main Steam Study Guide
	IPO-005A

Proposed references to be provided to applicants during examination: _____

Learning Objective: EXPLAIN the normal, abnormal and emergency operation of the Main Steam system. (LO21.SYS.MR1.OB05)

Question Source:	Bank #	
	Modified Bank#	
	New	X
Question History:	Last NRC Exam	
Question Cognitive Level	Memory or Fundamental Knowledge	
	Comprehension or Analysis	X
10 CFR Part 55 Content:	55.41	41.5
	55.43	n/a

Main Steam Study Guide

Plant Cooldown

Following plant shutdown, it may be desired or necessary to perform a plant cooldown for entry into a different operational mode (see Technical Specifications, Section 1.1 - Definitions). A normal plant cooldown will be conducted using IPO-005 "Plant Cooldown from Hot Standby to Cold Shutdown."

The preferred method of plant cooldown is performed using Steam Dumps in the "Steam Pressure" mode and controlled by u-PK-507 in manual. Extreme care must be exercised when opening the Steam Dumps to prevent an inadvertent steam line low pressure Safety Injection (above P-11) or Main Steam Line Isolation (if SI is blocked below P-11). Actual cooldown rate is dictated by operational need, but is procedurally limited to < 100˚F/hr at a uniform rate. Cooling down at a uniform rate is preferred, to a stepwise temperature decrease, to minimize the effects on Reactor Vessel integrity. Upon reaching the LO-LO RCS Tave (P-12) setpoint (553˚F), the steam dump system is placed in Bypass Interlock position to allow the plant to be cooled down below 553˚F using only three cooldown valves.

CPNPP Technical Specifications section 3.4.3, states "RCS pressure, RCS temperature, and RCS heatup and cooldown rates shall be maintained within the limits specified in the PTLR." The "Pressure and Temperature Limits Report" (PTLR) specifies the maximum heatup or cooldown rate shall not exceed 100˚F in any one hour period.

When it is desired to cooldown the plant with the MSIV's closed, the ARV must be used. This is not the preferred method of decay heat removal and plant cooldown because of the loss of condensate inventory. If using the ARV's, chemistry shall be notified to determine if a radioactive release permit is required. Extreme care must be observed, when opening the ARVs since opening the ARVs too quickly in auto or manual may result in a rate compensated Steamline Low Pressure SI signal.

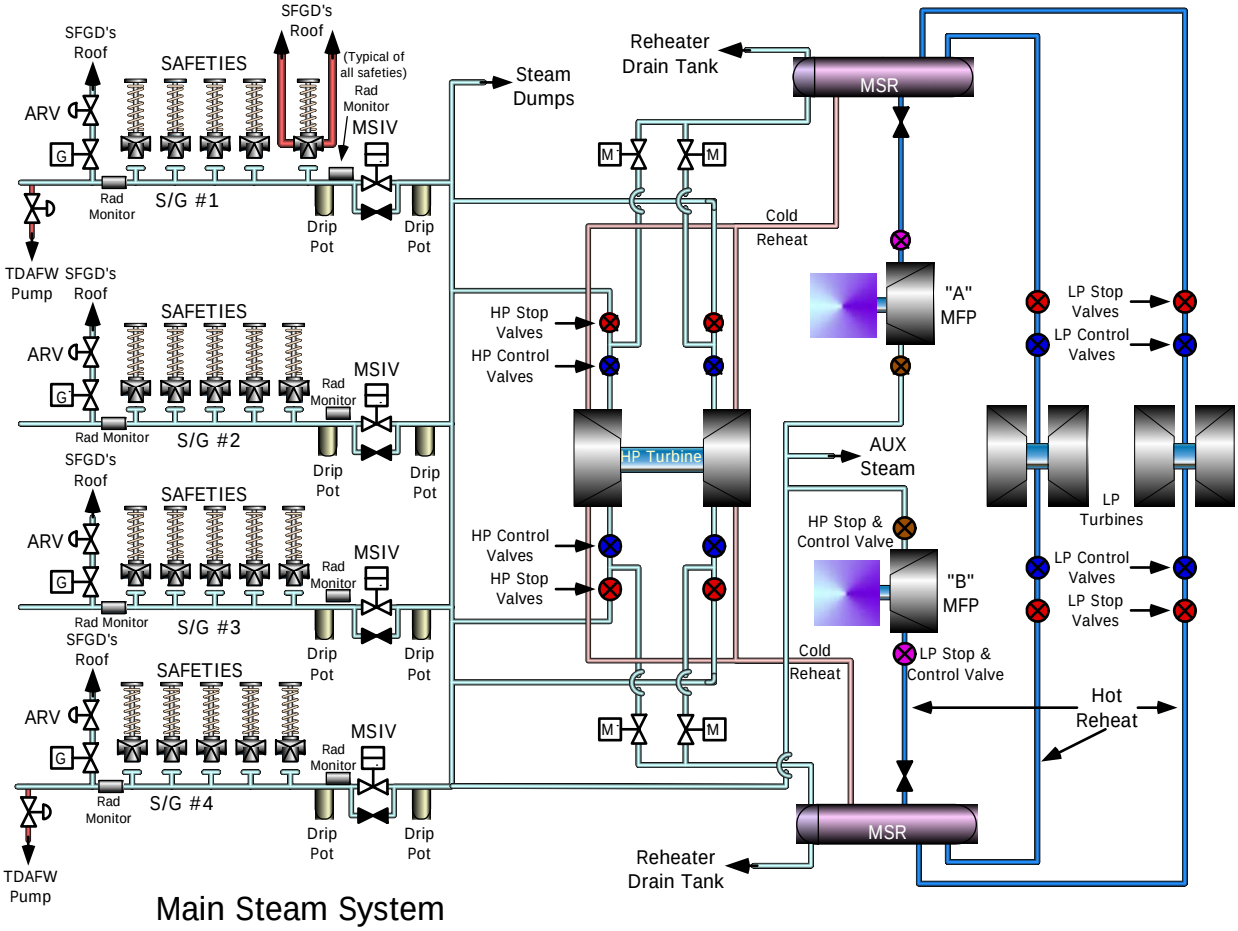

Main Steam System
Figure 5

Steam Dump Study Guide

MAIN STEAM DUMP TO CONDENSER VALVES (STEAM DUMP VALVES)

The Main Steam Dump to Condenser Valves are the heart of the Steam Dump System. These valves modulate to control the rate and amount of steam which bypasses the Main Turbine and enters the Main Condenser. The valves modulate open whenever the temperature of the Reactor Coolant System is five degrees above a programmed value for the current power level and the steam dump valves are armed by C-7.

The valves also modulate open when the temperature is above the no-load temperature of 557°F upon a reactor trip. The intent is to provide an artificial load for the Nuclear Steam Supply System (NSSS) so the unit transient remains within the bounds of the NSSS design.

The Main Steam Dump to Condenser Valves are pneumatically operated valves which utilize Instrument Air to open. The pressure of the Instrument Air System overcomes spring pressure to open these valves. When air pressure is removed, the valve's spring closes the valve. The valve is designed to fail closed.

The twelve Main Steam Dump to Condenser Valves are arranged in four banks of three valves. This gives each bank 25% of the steam dump capacity of the Steam Dump System. As the temperature of the Reactor Coolant System increases above a programmed value, a bank of valves will modulate open in an effort to reduce Reactor Coolant System temperature. Once the first bank has modulated fully open, the second bank starts to open. This sequence of opening continues until the valves of all four banks have opened fully. As Reactor Coolant System temperature decreases, the banks modulate fully closed in reverse order. Bank 4 will modulate fully closed and then bank 3 will modulate closed.

OPERATIONS

NORMAL

During normal at power operations (>15% Rx power), the Steam Dump System does not operate. The Steam Dump Valves are closed and the system is in a standby status. The protection grade solenoids are energized, the control solenoid is de-energized (lacks an arming signal), and the trip open control solenoid is de-energized. The Steam Dump Mode Selector Switch is in it’s Tave Mode. The Steam Dump Interlock Bypass Switches are in their "ON" position. The system is awaiting an arming signal to operate.

In the event Main Turbine power is reduced by more than 10% in two minutes, the control solenoid 4 would energize. The action would allow air flow from the valve positioner to the valve actuator. This would result in the Steam Dump Valves modulating open to reduce the RCS temperature deviation from its programmed value. When the Steam Dump Valves modulate open, steam would be diverted away from the Main Turbine and directly to the Main Condenser. The additional steam flow will reduce RCS temperature. The reduction in RCS temperature will cause reactor power to remain approximately the same as when the Steam Dump Valves started to open. As the temperature deviation is reduced, the Steam Dump Valves modulate closed and reduce the steam flow entering the Main Condenser. The reduction in steam flow will cause reactor power to lower to a new equilibrium with Main Turbine load. When the temperature deviation decreases to a 5°F difference, the Steam Dump valves will have modulated fully closed. The operator must take action to reduce this deviation with the addition of negative

reactivity if the Control Rods are not in Auto. The C-7 arming signal should also be reset to prevent an instrument failure from reopening the Steam Dump Valves.

A reactor trip while operating at power will cause the Steam Dump System to shift to the Plant Trip Controller. The Steam Dump Valves will open because programmed or reference temperature is now 557°F and RCS temperature will be some higher value. If the unit had been operating at a high power, the Hi-1 Trip Open Bistable will most likely energize and cause six of the Steam Dump Valves to fully open. Steam flow from the SG's to the Main Condenser will reduce RCS temperature. When the temperature deviation decreases below 20.0 °F, the Hi-1 Trip Open Bistable will de-energize and the Steam Dump Valves will modulate based on the air signal from their valve positioner. For every degree of temperature reduction, the Steam Dump System's demand will decrease 2.5%. Once the Steam Dump System has reduced RCS temperature to 557°F, the Steam Dump Valves will close.

As temperature rises above 557°F due to residual heat, the Steam Dump Valves will modulate open to lower Reactor Coolant System temperature back to 557°F.

When the unit is at low power (<15%) or in Hot Standby conditions, the Steam Dump System operates to maintain a desired SG pressure. The Steam Dump Mode Selector Switch is in its "STEAM PRESSURE" position. The Steam Dump Interlock Bypass Switches are in their "ON" position. If RCS temperature is below 553°F “BYPASS” must be selected and only three sets of the protection grade solenoids are energized. This allows only the Bank 1 (cool down valves) Steam Dump Valves to operate. The control grade solenoid which arms to open the Steam Dump Valves is energized from the Steam Pressure Mode and C-9 signals. The control grade solenoid which provides the trip open feature is de-energized. If the desire is to maintain Reactor Coolant System temperature at the current value, the operator will place the M/A Station in automatic and set the potentiometer to the desired SG pressure.

NOTE:
- Pressurizer level will decrease as the RCS is cooled in the following step.
- Up to two steam dumps may be disabled by manually isolating or removing fuses in SSPS as applicable, to aid a controlled cooldown.

[C] 5.2.4 C. IF desired to cooldown with the Steam Dumps,
THEN
PERFORM the following steps. THIS IS THE PREFERRED METHOD.

☐ 1) VERIFY 43/1-SD, STM DMP MODE SELECT in STM PRESS.

☐ 2) IF 1-PK-507, STM DMP PRESS CTRL is in AUTO,
THEN
PLACE in MANUAL.

CAUTION: Extreme care must be observed when opening the Steam Dump Valves in Auto or Manual. A rate compensated steam line low pressure Safety Injection or Main Steamline Isolation (if blocked below P-11) can result from the valves opening too quickly.

☐ 3) Slowly ADJUST 1-PK-507, STM DMP PRESS CTRL demand to establish an RCS cooldown rate <100°F in one hour.

NOTE: When RCS temperature drops below 553°F, only the Steam Dump Cooldown valves are available.

☐ 4) WHEN RCS Tavg approaches Lo-Lo Tavg P-12 (553°F),
THEN
HOLD both STM DMP INTLK SELECT switches in BYP INTLK.

5) VERIFY the following status lights are ON:

☐ • 1-TSLB-8, 1.8, STM DMP TRN A INTLK BYP 43/1-SDA

☐ • 1-TSLB-8, 2.8, STM DMP TRN B INTLK BYP 43/1-SDB

☐ 6) WHEN 1-PCIP, 3.6, Tavg LO-LO P-12 is ON,
THEN
RELEASE both STM DMP INTLK SELECT switches.

Steam Dumps are in service for cooldown. _____ / _____
Initials Date

Examination Outline Cross-Reference	Level	RO	SRO
Rev Date: 12/22/2014	Tier #	2	n/a
Change: 2	Group #	1	n/a
	K/A #	059 A3.02	n/a
Level of Difficulty: 3	Importance Rating	2.9	n/a

Main Feedwater: Ability to monitor automatic operation of the MFW, including: Programmed levels of the S/G.

Question 18

Unit 2 plant conditions:

- Reactor power = 60%
- SG NR levels = 65% increasing slowly

1. Based on the above conditions, SG levels are ____(1)____.

2. A Steam line break at this power level would result in a ____(2)____ cool down than the same break at 100% power.

A. (1) moving closer to their setpoint
(2) larger

B. (1) moving closer to their setpoint
(2) smaller

C. (1) moving farther away from their setpoint
(2) larger

D. (1) moving farther away from their setpoint
(2) smaller

Answer: C

This question matches the KA by requiring knowledge of the SG program levels and the differences between Unit 1 and 2.

Explanation / Plausibility:

A. 1st part is incorrect because the program level setpoint for Unit 2 is 64%. It is plausible because if it were Unit 1, it would be correct. 2nd part is correct. At lower powers, there is more mass in the SG so a break would result in more water boiling and subsequently more cooldown of the RCS.

B. 1st part is incorrect but plausible (see A). 2nd part is incorrect because at a lower power, there is more water inventory (mass) in the SGs. It is plausible because it is a common misconception that there is more energy in the SG at higher power.

C. 1st part is correct. 2nd part is correct.

D. 1st part is correct. 2nd part is incorrect but plausible (see B).

Technical Reference: (Attach if not previously provided including revision number)	Main Steam Study Guide

Proposed references to be provided to applicants during examination: _____

Learning Objective: DIFFERENTIATE between the Unit 1 and 2 Main Steam systems. (LO21.SYS.MR1.OB07)
EXPLAIN the normal, abnormal and emergency operation of the Main Steam system. (LO21.SYS.MR1.OB05)

Question Source:	Bank #	
	Modified Bank#	
	New	X
Question History:	Last NRC Exam	
Question Cognitive Level	Memory or Fundamental Knowledge	X
	Comprehension or Analysis	
10 CFR Part 55 Content:	55.41	41.7
	55.43	n/a

INSTRUMENT AND CONTROL

Steam Generator Control (Figures 10 and 10a)

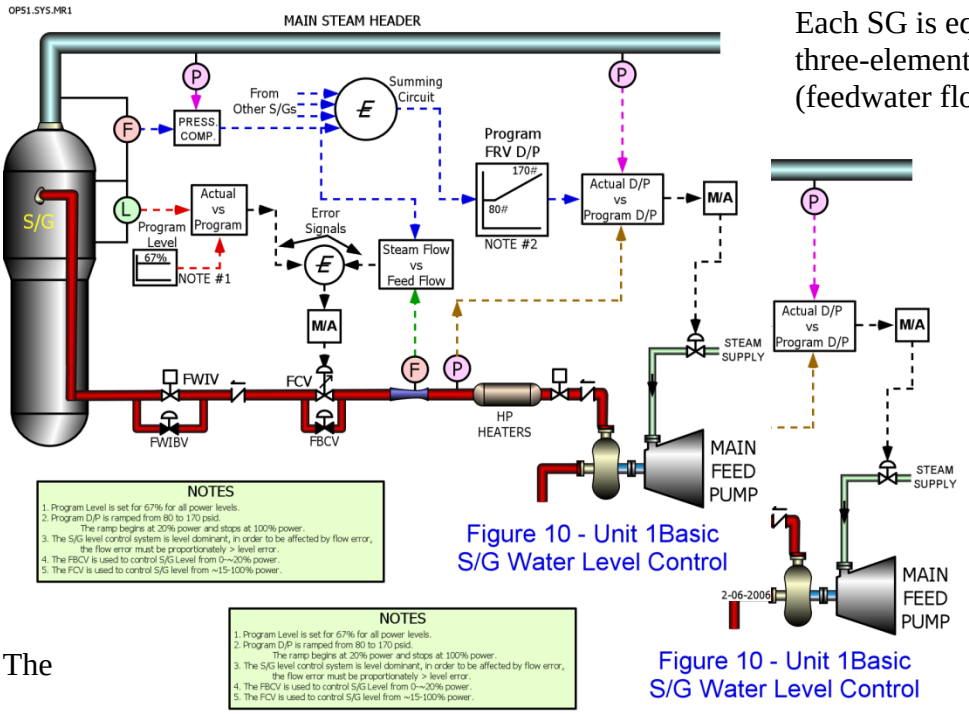

Figure 10 - Unit 1Basic
S/G Water Level Control

NOTES
1. Program Level is set for 67% for all power levels.
2. Program D/P is ramped from 80 to 170 psid.
The ramp begins at 20% power and stops at 100% power.
3. The S/G level control system is level dominant, in order to be affected by flow error,
the flow error must be proportionately > level error.
4. The FBCV is used to control S/G Level from 0~~20% power.
5. The FCV is used to control S/G level from ~15-100% power.

Figure 10 - Unit 1Basic
S/G Water Level Control

2-06-2006

Each SG is equipped with a three-element feedwater controller (feedwater flow, steam flow and water level) which automatically maintains a desired water level in the secondary side of the SG during normal power operation. This system is normally referred to as the Steam Generator Water Level Control system (SGWLC).

The SGWLC instrumentation provides automatic isolation signals to the feedwater valves to protect the Reactor from excessive cooldown and the Turbine from moisture carryover. The instrumentation is also used to provide signals to the reactor protection system for the generation of various reactor trips. Some of the instrumentation is redundant in order to meet reactor protection grade requirements.

The SG level setpoint is constant for all power levels. The setpoint was designed to minimize the impact of analyzed operational and protection considerations. Analysis of possible accident conditions has determined that the water mass in the steam generator should be minimized to mitigate the consequences of analyzed accident situations. Any steam break in the secondary system will cause rapid boiling of the water within the SGs. This boiling will remove a large amount of energy from the reactor coolant system. The resulting reactor coolant cooldown will cause a large positive reactivity insertion into the reactor core due to a negative moderator temperature coefficient. Thus, a steam break can cause an uncontrolled reactor power excursion which will be proportional to the water mass available for boil-off within the SG.

As power increases the steam volume within the SG tube area also increases. The increased steam volume results in a decrease of the water mass within the SG. Likewise, at lower power levels, steam volume within the SG tube area decreases and the mass of water increases. This relationship is important with respect to the safety analysis. Since more water mass is available in the SG at lower power level, a steam break in the secondary will result in a larger cooldown and subsequent reactivity transient than would be experienced at higher power levels. This means that the safety consideration requiring a low water mass is most limiting at low power

levels. Therefore, the maximum level at low power must be governed by the above considerations.

There are several operational constraints upon the level program that must also be considered. The normal operating setpoint must be sufficiently removed from the high and low protective trip setpoints so that there is a reasonable likelihood of operation without interruption.

The phenomenon of "shrink" and "swell" complicates this. The probability of causing a low-low level reactor trip following a design load rejection because of this "shrink" and "swell" phenomenon must be minimized. Therefore, the margin between level setpoint and the low-low level trip must be maximized.

Another operational consideration involves the effect of moisture carryover into the steam header to the turbine blading. Excessive carryover can cause rapid turbine failure. High SG level reduces the efficiency of the moisture separators. A high level turbine trip is designed to prevent such damage. The SG normal level setpoint must be sufficiently below this trip setpoint.

Level Transmitters

SGs use wet reference leg differential pressure type level transmitters. SGs 1 and 2 have six transmitters. Four of the six transmitters are narrow range. Two are wide range transmitters, one of which feeds to the control room and the other feeds the RSP. SGs 3 and 4 use five of these level transmitters with four being narrow range and one wide range. RSP wide range level indication for SGs 3 and 4 is driven from its associated wide range transmitter.

If the density of the fluid in the reference leg is the same as that in downcomer, then:

$$P_1 = gh_{downcomer} + P_{downcomer}$$

$$P_2 = gh_{ref} + P_{downcomer}$$

$$P_2 - P_1 = g\,(h_{ref} - h_{downcomer})$$

Where:

g = force due to gravity

P = pressure

h = height

If the reference leg height is maintained at a constant level, then the height of the fluid level in the downcomer is proportional to the differential pressure. A condensing pot at the top of the reference leg is kept uninsulated. The uninsulated region is relatively cooler and steam will condense inside the pot and maintain a constant reference leg level.

A problem arises when the temperature of the reference leg fluid is considerably different from the downcomer fluid. Differential pressure is expressed as:

$$P = g(P_{ref} \times h_{ref} - P_{downcomer} \times h_{downcomer})$$

During normal steady-state operations, the difference in density due to difference in the two fluid temperatures is compensated for by calibrating the level instrument to include the expected difference in density. The problem is more of a concern during a postulated high energy line

break. In this condition the reference leg temperature increases as the containment temperature increases. This change in density of the reference leg from its calibrated condition will cause an error in the indicated steam generator level. Actual level will be less than indicated level for the SG as reference leg temperature increases.

Another problem involving reference legs is reference leg boiling. Reference leg boiling can occur with a sudden pressure drop in the steam generator (i.e. steam line break, step increase in load). If the reference leg pressure decreases to less than the saturation pressure, then boiling will occur. This decreases the density of the fluid in the reference leg and will cause an error in the indicated steam generator level. Actual level would be less than indicated level for the affected SG as reference leg level decreases.

Narrow range 0 to 100% level indication is provided on the main control board for all four steam generators. One channel of narrow range level indication, steam flow, and feed flow are displayed on a recorder. A selector switch will select one of two narrow range level detectors on each SG to supply control signals for the control system, trend recorder and alarm. Protective outputs from narrow range level are low-low SG level reactor trip, high-high SG level turbine trip, and low steam generator level AMSAC actuation.

The wide range (cold cal) level detector shares an upper tap with a narrow range detector and has a lower tap just above the tube sheet. Wide range indication on the main control board and RSP is used when outside the normal operating band. The main control board also has two wide range level recorders. Each wide range recorder receives input from two SGs.

The relationship between the narrow range and wide range is such that approximately 57% level wide range is approximately 0% level narrow range. A 60% level indication on the wide range ensures that the tube bundle is covered. Normal level is maintained constant at 67% narrow range on Unit 1 and 64% narrow range on Unit 2.

Actual level is compared with normal level setpoint 67% (64%) and summed with density compensated steam flow and feed flow for a control signal to the Feedwater Control Valve (FCV). If the level transmitter fails high, then the associated FCV will try to close down to compensate, causing the affected SG level to trend down to a low level trip setpoint 38% (35.4%). Conversely, if the level transmitter fails low, then the associated FCV will try to open to compensate, causing the affected SG level to trend up to a high level trip setpoint 84% (81.5%).

Examination Outline Cross-Reference	Level	RO	SRO
Rev. Date: 12/22/2014	Tier #	2	n/a
Change: 2	Group #	1	n/a
	K/A #	061 K6.02	n/a
Level of Difficulty: 3	Importance Rating	2.6	n/a

Auxiliary/Emergency Feedwater: Knowledge of the effect of a loss or malfunction of the following will have on the AFW components: Pumps

Question 19

Unit 1 plant conditions:

- Reactor power = 45%
- The running Main Feedwater pump trips
- Motor Driven Aux FW Pump 1-01 fails to start

Based on the above conditions, complete the following statements:

1. The Turbine Driven Aux FW Pump will automatically start ____(1)____.

2. If the Turbine Driven Aux FW Pump fails to start and the operating Motor Driven Aux FW Pump is cross-connected to supply all 4 SGs, flow shall be limited to ____(2)____ gpm to prevent a run-out condition.

   A. (1) when ONE Steam Generator NR level reaches its LOW-LOW setpoint
      (2) 700 gpm

   B. (1) when ONE Steam Generator NR level reaches its LOW-LOW setpoint
      (2) 800 gpm

   C. (1) ONLY when TWO Steam Generator NR levels reach their LOW-LOW setpoint
      (2) 700 gpm

   D. (1) ONLY when TWO Steam Generator NR levels reach their LOW-LOW setpoint
      (2) 800 gpm

Answer: D

This question matches the KA by requiring knowledge of how a failed AFW pump will impact operation of the remaining components.

Explanation / Plausibility:

A. 1st part is incorrect because for the Turbine Driven AFW pump, the start setpoint is 2/4 SGs at the LOW-LOW setpoint. It is plausible because the auto start for the Motor Driven AFW pumps occur when 1 SG is at the LOW-LOW setpoint. 2nd part is incorrect because flow is limited to 800 gpm. It is plausible because the orifice installed downstream of each Feed Regulating Valve is designed to limit flow to 700 gpm to preclude run-out conditions.

B. 1st part is incorrect but plausible (see A). 2nd part is correct. When cross-connected, flow is limited to 800 gpm to prevent a run-out condition.

C. 1st part is correct. The Auto-Start setpoint for the Turbine Driven AFW pump is LOW-LOW on 2/4 SGs. 2nd part is incorrect but plausible (see A).

D. 1st part is correct. 2nd part is correct.

Technical Reference: (Attach if not previously provided including revision number)	ABN-305 Auxiliary Feedwater Study Guide

Proposed references to be provided to applicants during examination: _____

Learning Objective: DISCUSS ABN-305, "Auxiliary Feedwater System Malfunctions", to include the following:
1)Applicability
2)Symptoms
3)Plant Indications
4)Automatic Actions
5)Initial Operator Actions (LO21.SST.AF1.OB02)

Question Source:	Bank #	
	Modified Bank#	
	New	X
Question History:	Last NRC Exam	
Question Cognitive Level	Memory or Fundamental Knowledge	
	Comprehension or Analysis	X

10 CFR Part 55 Content:	55.41	41.7
	55.43	n/a

ATTACHMENT 2
PAGE 2 OF 2

MD AFW TRAIN CROSS-CONNECTION WITH MD AFWPs SHUTDOWN

CAUTION: Do not exceed 800 gpm total flow on one MD AFWP. Runout of the pump may occur with the train cross-connects open.

6. Manually control AFW flow to selected steam generator by pressing the OPEN or

MDAFW PUMPS

The two MDAFW pumps are horizontal, split casing, 9 stage centrifugal pumps. They are powered by 700 hp, 3570 rpm, 60 HZ motors. Normal power supply is from the 6.9 KV safeguards buses uEA1 and uEA2. Maximum pump capacity is 570 gpm at a maximum developed head of 1370 psig.

The MDAFWPs may be manually started or stopped with control board switches. These switches are three position (STOP, AUTO, START) selector switches which spring return to center position and pull-to-lock in the STOP position. Manual start, out of sequence after a blackout or safety injection signal, is prevented with signal interlocks. If an automatic start signal from the SI or BO sequencer is still present, the pump hand switches must be taken to the pull-to-lock position to stop the pump.

When Control Room switches are inaccessible, manual operation from the Remote Shutdown Panel (RSP) is provided. Local manual control from the RSP overrides all other signals. Manual control is switched from control board to the RSP with transfer switches located on the Shutdown Transfer Panel (STP) (Train "A") or on the RSP (Train "B"). When control is transferred, an alarm for local override is actuated in the Control Room.

The MDAFWPs will automatically start due to (**Figure 2**):

- Low-low Steam Generator narrow range level at 38% (35.4% for Unit 2) in two out of four detectors on any one Steam Generator,
- Trip of both main feed pumps,
- Safety injection sequence signal (SI),
- Blackout (BO) sequence signal, or
- AMSAC signal

UNIT 1 AUXILIARY FEEDWATER TO SG's

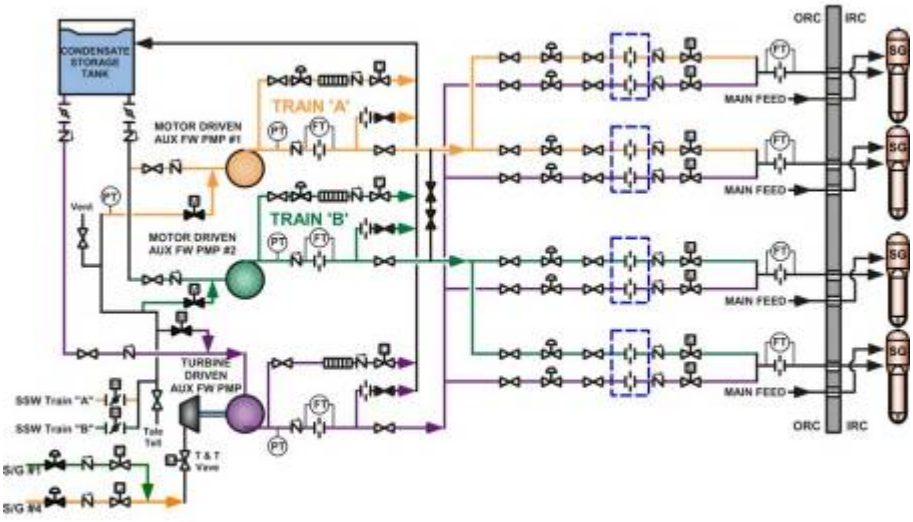

OP51.SYS.AF1.FG01 5-8-2012

AUXILIARY FEEDWATER PUMP START LOGIC

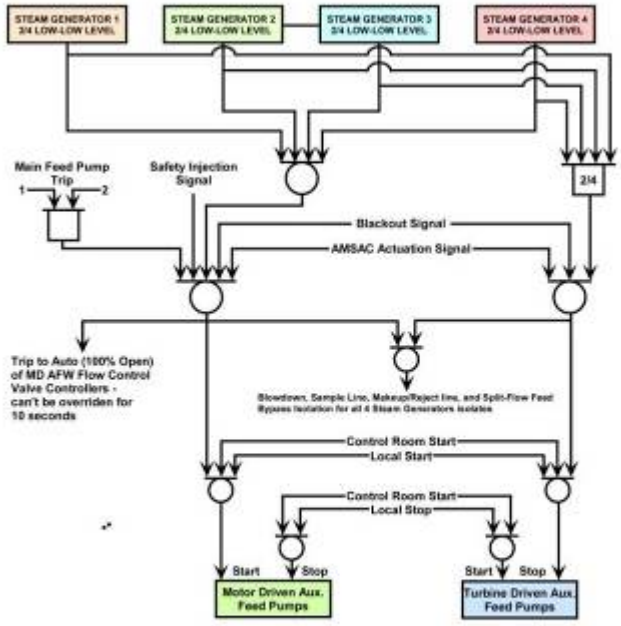

OP51.SYS.AF1.FG02 03-31-2009

MDAFWP FLOW CONTROL VALVES

Each MDAFW pump discharge line branches into individual lines feeding its two associated SGs. The individual AFW line to each SG is provided with a normally open, pneumatically operated flow control valve. Manual isolation valves are provided for maintenance and local flow control.

MDAFW pump flow to each SG is controlled by flow control valves, PV-2453A and B for the Train A pump, PV-2454A and B for the Train B pump. The flow control valves fail open on loss of air or electrical power.

Each flow control valve is provided with a safety class air accumulator sized for five full cycles, plus leakage and steady state consumption for 30 minutes. This allows the valve to control AFW flow following a loss of Instrument Air coincident with a plant condition which requires AFW operation, or to isolate a faulted SG when the normal motor operated isolation valves are not available. The manual isolation valves are then used to control the flow in the event of loss of air to the flow control valves.

Manual/auto (M/A) controllers on the Main Control Board enable the operator to control flow manually from the Control Room. Upon automatic start of the MDAFW pumps, flow control valves PV-2453 A&B and PV-2454 A&B will automatically trip from manual to automatic control and position full open to ensure flow to the SGs. After a 10 second time delay the flow control valves can be manually positioned by the operator to adjust flow to the SGs. M/A controllers for these valves on the RSP enable the operator to control flow from the RSP when the RSP controllers are placed in manual. When in automatic, these controllers allow feed control to be accomplished at the Main Control Board.

A flow restricting orifice is provided downstream of each feed regulator valve. The orifice is designed to limit the maximum flow to a faulted SG to 700 gpm and prevent a pump runout condition.

TDAFWP STEAM SUPPLY

The two steam supply lines contain normally closed, pneumatic diaphragm isolation valves. These air operated valves fail open, ensuring that the turbine accelerates to design speed within 85 seconds, on loss of air supply or electrical power. Each valve is provided with a safety class air accumulator to permit the valves to be closed in the event of an instrument air failure. The accumulators are sized to close the steam supply valves and maintain them closed for 7.5 hours.

The main steam line to the TDAFW pump is equipped with condensate traps to remove any moisture buildup in the lines. Turbine steam is exhausted to the atmosphere through a safety related roof vent. The turbine steam exhaust line on Unit 1 is equipped with a condensate trap to eliminate moisture buildup in the exhaust line and turbine. These traps are routed to a flash tank located in the pipe trench outside the TDAFW pump room. In both Units, selected traps are provided with level switches which provide signals to actuate annunciator window 2.6, "ANY TD AFWP D\POT LVL HI" alarm on ALB-8B on the Main Control Board. This annunciator provides indication of excessive condensation and/or moisture buildup in the steam supply line to the TDAFW Pump turbine.

The TDAFW Pump may be started or stopped from the Control Room by opening or closing the steam supply valves. The TDAFW Pump steam supply valves, HV-2452-1 and HV-2452-2, are operated using three position (OPEN, AUTO, CLOSE) switches on CB-09 which spring return to center position and pull-to-lock in the STOP position.

When Control Room switches are inaccessible, manual operation from the RSP is provided. Local manual control from the RSP overrides all other signals. Manual control is switched from the Main Control Board to the RSP with installed hand switches on the Switch Transfer Panel (STP) for the Train A valve (main steam line 4) or the RSP for the Train B valve (main steam line 1). When control is transferred, an alarm for local override is sounded in the Control Room.

The TDAFWP steam supply valves will automatically open, admitting steam to the TDAFW Pump turbine, due to:

- Low-low SG NR level at 38% (35.4% for Unit 2) on two of four detectors in any two SGs,
- Blackout Sequencer operator lockout signal, or
- AMSAC signal

CROSS-CONNECTING STEAM GENERATORS

If necessary, a single MDAFW pump can be used to feed all four SG's. However, operating with the MDAFW trains cross-connected in Modes 1, 2, or 3 violates the train independence of Technical Specification 3.7.5 and places the Unit in a LCOAR for both of the cross-connected trains. With one MDAFW pump operating to supply all four SGs, pump flow must be limited to 800 gpm in order to preclude pump runout.

Examination Outline Cross-Reference	Level	RO	SRO
Rev. Date: 12/22/2014	Tier #	2	n/a
Change: 2	Group #	1	n/a
	K/A #	062 K2.01	n/a
Level of Difficulty: 2	Importance Rating	3.3	n/a

AC Electrical Distribution: Knowledge of bus power supplies to the following: Major system loads

Question 20

Which ONE of the following is correct regarding the power supply to Reactor Coolant Pump 1-01 and Reactor Coolant Pump 1-02?

A. 1A1
   1A2

B. 1A3
   1A4

C. 1EA1
   1EA2

D. 1EA3
   1EA4

Answer: A

This question matches the KA by requiring knowledge of the power supplies for Major AC loads.

Explanation / Plausibility:

A. Correct, the power supplies for the reactor coolant pumps are 1A1 and 1A2.

B. Incorrect because the power supplies are 1A1 and 1A2. Plausible because if it were condensate pumps 01 and 02, it would be correct.

C. These are incorrect because the power supplies are 1A1 and 1A2. They are plausible because it is a common misconception that RCPs are safety related due to being part of the reactor coolant system.

D. Incorrect but plausible (see B & C).

Technical Reference: (Attach if not previously provided including revision number)	6.9kv and 480v Study Guide

Proposed references to be provided to applicants during examination: _____

Learning Objective: DESCRIBE the components of the 6.9 KV and 480 V Electrical Distribution system including interrelations with other systems to include interlocks and control loops. (LO21.SYS.AC2.OB03)

Question Source:	Bank #	
	Modified Bank#	
	New	X
Question History:	Last NRC Exam	
Question Cognitive Level	Memory or Fundamental Knowledge	X
	Comprehension or Analysis	
10 CFR Part 55 Content:	55.41	41.7
	55.43	n/a

6.9kv and 480v Study Guide

Non-Safeguards 6.9KV Buses

These buses are a single bus arrangement. They are located in the 810' level of each unit's Turbine Building in the room designated the normal switchgear room. These buses supply power to their respective 480v AC Non 1E bus along with the following loads:

uA1	uA2	uA3	uA4
Reactor Coolant Pump 01	Reactor Coolant Pump 02	Reactor Coolant Pump 03	Reactor Coolant Pump 04
Circ. Water Pump 01	Circ. Water Pump 02	Circ. Water Pump 03	Circ. Water Pump 04
Heater Drain Pump 01	Heater Drain Pump 02		
		TPCW Pump 01	TPCW Pump 02
		Condensate Pump 01	Condensate Pump 02

Examination Outline Cross-Reference	Level	RO	SRO
Rev. Date: 12/22/2014	Tier #	2	n/a
Change: 2	Group #	1	n/a
	K/A #	063 K2.01	n/a
Level of Difficulty: 2	Importance Rating	2.9	n/a

DC Electrical distribution: Knowledge of bus power supplies to the following: Major DC loads

Question 21

The Unit 1 Main Turbine Emergency Lube Oil Pump is powered from DC bus _____.

A. 1ED1

B. 1ED2

C. 1D1

D. 1D2

Answer: D

This question matches the KA by requiring knowledge of power supply to the Main Turbine Emergency Oil Pump.

Explanation / Plausibility:

A. Incorrect. Plausible because it could be thought that the power supply is Train A Safeguards DC power for “emergency” pumps. See C below for Train A plausibility.

B. Incorrect. Plausible because it could be thought that the power supply is Train B Safeguards DC power for “emergency” pumps.

C. Incorrect. Plausible because it could be thought that 1D1 is the 125/250 VDC power supply, however 1D1 is the 24/48 VDC power supply for Unit 1 turbine/generator protection and control systems.

D. Correct. 1D2 is the 125/250 VDC power supply to Unit 1 large DC motors.

Technical Reference:	DC Electrical Distribution Study Guide
(Attach if not previously provided including revision number)	

Proposed references to be provided to applicants during examination:

Learning Objective:	**COMPREHEND** the normal, abnormal and emergency operation of the DC Electrical Distribution system. (LO21.SYS.DC1.OB04)

Question Source:	Bank #	
	Modified Bank#	
	New	X
Question History:	Last NRC Exam	
Question Cognitive Level	Memory or Fundamental Knowledge	X
	Comprehension or Analysis	
10 CFR Part 55 Content:	55.41	
	55.43	n/a

125/250 VDC - BUS uD2

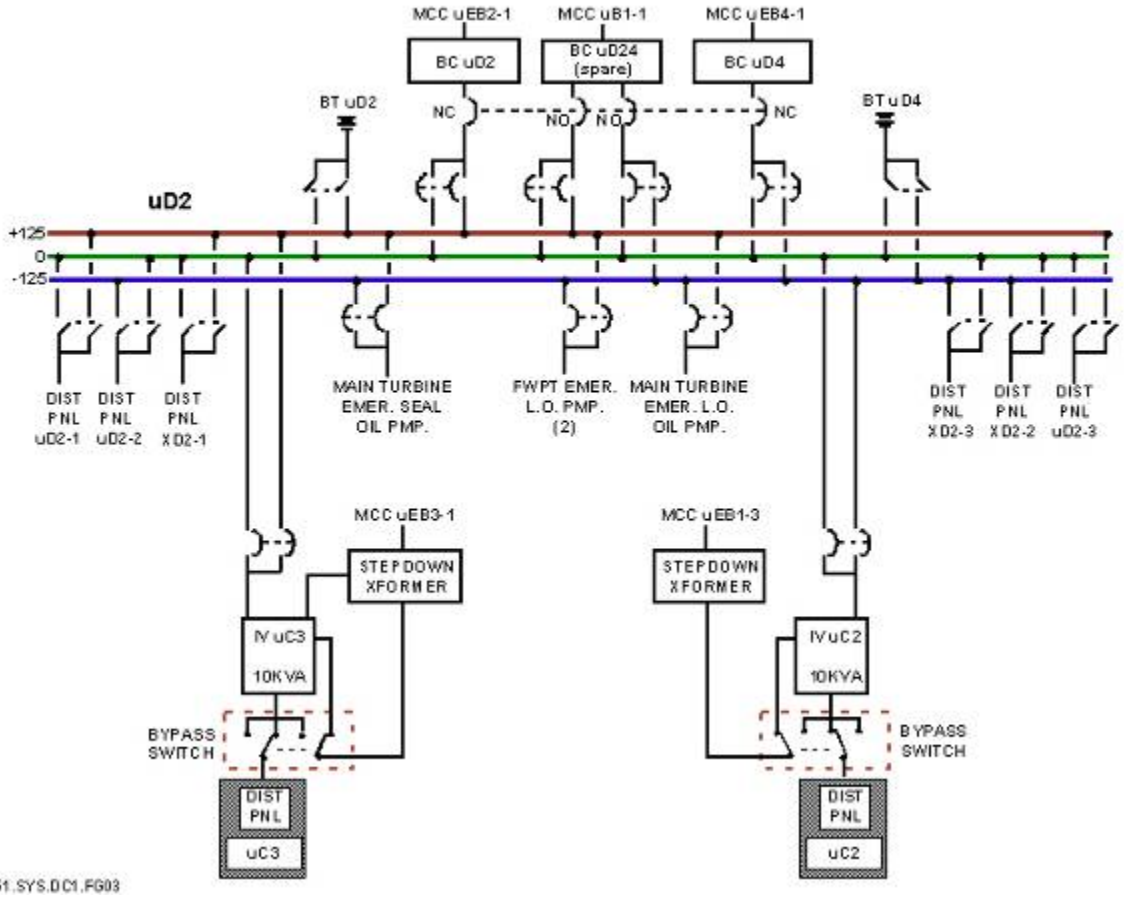

OP51.SYS.DC1.FG03

12-5-03

DC Electrical Distribution Study Guide

The non-safeguards 125/250 VDC bus uD2 is normally powered from Train B safeguards AC power via battery chargers BCuD2 and BCuD4 (**Figure 3**). The bus can also be provided power from non-safeguards AC via "spare" battery charger BCuD24. uD2 provides 250 VDC to large DC motors such as emergency lube oil pumps. The bus also supplies 125 VDC to several distribution panels. These distribution panels provide DC control power to all non-safeguards 6.9 KV and 480 V breakers (except RCP breakers) which DC control power. The uD2 bus also supplies the two non-Class 1E inverters IVuC2 and IVuC3.

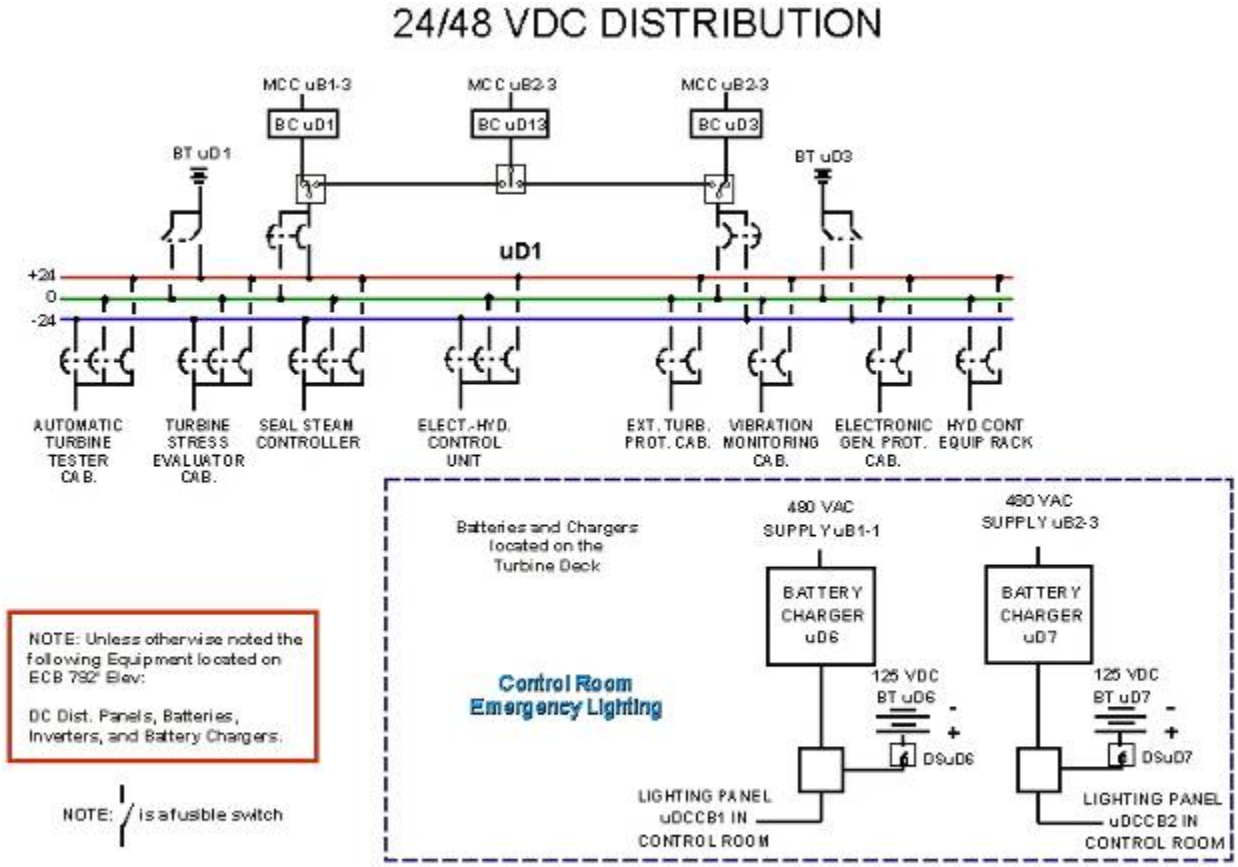

Examination Outline Cross-Reference	Level	RO	SRO
Rev. Date: 12/22/2014	Tier #	2	n/a
Change: 1	Group #	1	n/a
	K/A #	064 A2.15	n/a
Level of Difficulty: 3	Importance Rating	2.6	n/a

Emergency Diesel Generator: Ability to (a) predict the impacts of the following malfunctions or operations on the ED/G system; and (b) based on those predictions, use procedures to correct, control, or mitigate the consequences of those malfunctions or operations: Water buildup in cylinders

Question 22

Unit 1 plant conditions:

- A Small Break LOCA occurs
- SI initiates
- 1EA1 and 1EA2 are energized
- Both DGs started and are running unloaded
- Annunciator DG 1 TRBL comes into alarm
- An operator reports to the control room that the TRIP VIBRATION and LOW LEVEL JACKET WATER alarms are in on DG 1 with sporadic jacket water pressure and two cylinders indicating lower temperatures than the remaining cylinders.

Based on the above conditions, complete the following statements:

1. DG 1 _____ have automatically tripped based on the reported conditions.

2. Per the TRIP VIBRATION alarm response, the local operator is to _____.

A. (1) should NOT
(2) notify the Control Room to ensure that DG 1 is tripped

B. (1) should NOT
(2) immediately place the Master Switch to LOCAL, then place the local Emergency Stop/Start switch to STOP

C. (1) should
(2) notify the Control Room to ensure that DG 1 is tripped

D. (1) should
(2) immediately place the Master Switch to LOCAL, then place the local Emergency Stop/Start switch to STOP

Answer: A

The question matches the KA by requiring knowledge of how procedures direct operator actions due to DG vibration (from Jacket Water leakage).

Explanation / Plausibility:

A. 1st part is correct. During an emergency start, the high vibration trip is overridden. 2nd part is correct. The alarm response directs the local operator to "notify the control room to ensure that the DG is tripped".

B. 1st part is correct. 2nd part is incorrect because the alarm response directs the local operator to notify the Control Room to ensure the DG is tripped. It is plausible because the alarm does contain procedure steps to shut down the DG locally.

C. 1st part is incorrect because the DG should NOT have tripped. It is plausible because if it were a normal startup, it would be correct. 2nd part is correct.

D. 1st part is incorrect. But plausible (see C). 2nd part is incorrect but plausible (see B).

Technical Reference: (Attach if not previously provided including revision number)	Emergency Diesel Generator Study Guide
	Alarm Response ALM-1301A
	LO21.SYS.ED1

Proposed references to be provided to applicants during examination: _____

Learning Objective: EXPLAIN the normal, abnormal and emergency operation of the Emergency Diesel Generator system. (LO21.SYS.ED1.OB23)

Question Source:	Bank #	
	Modified Bank#	
	New	X
Question History:	Last NRC Exam	
Question Cognitive Level	Memory or Fundamental Knowledge	
	Comprehension or Analysis	X
10 CFR Part 55 Content:	55.41	41.5
	55.43	n/a

AC DISTRIBUTION SYSTEM

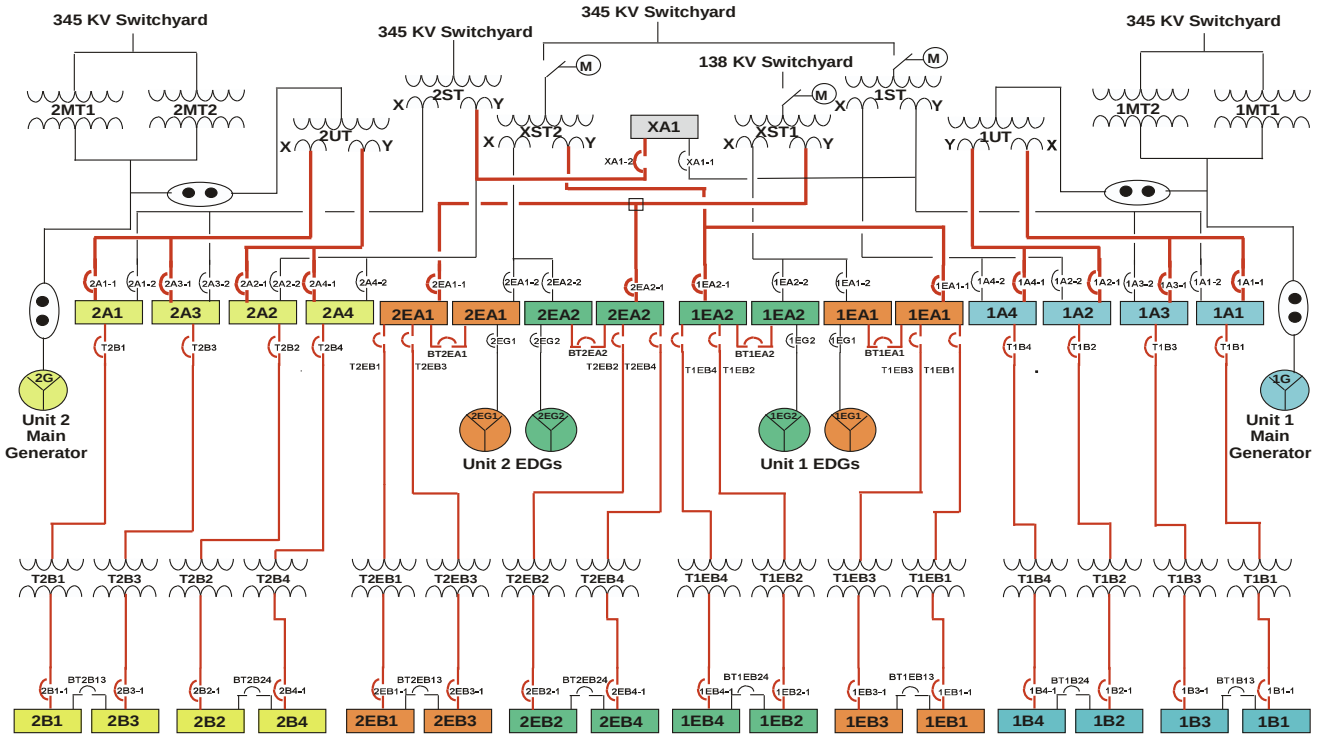

OP51.SYS.AC2.FG01

9-14-04

DIESEL GENERATOR STUDY GUIDE

Types of Start Signals

Engine start signals are classified as either NORMAL or EMERGENCY. Both types of signals act to start the engine by energizing the starting air admission valves. The engine responds in the same manner to either type of start in that the time it takes to reach rated speed and voltage is a function of other factors such as governor settings. The two signal types differ in the method by which the circuits energize the starting air admission valves and in the way the protective system functions following each type of start.

A NORMAL start signal acts to initialize the pneumatic shutdown system while the engine is starting. If less than 2 minutes have elapsed since the last engine shutdown then, on a normal start signal, the fuel rack shutoff cylinder and the combustion air shutoff cylinders will remain extended and the pneumatic trip system will not initialize. Instead the engine will roll on starting air for 5 seconds without firing and then stop.

An EMERGENCY start signal overrides the 2 minute pneumatic interlock following shutdown, to immediately initialize the pneumatic trip system and start the engine. All engine automatic shutdowns, with the exception of overspeed and phase differential overcurrent, are disabled when an EMERGENCY start signal is maintained.

A normal start signal is generally used when diesel generator operation is desired. An emergency start signal is used in emergency situations such as following a loss of coolant accident or a Black Out event. Table 9 identifies the conditions which generate the two types of starts.

Table 9: Engine Start Signals

START	CONDITION	ACTUATING DEVICE
Normal	Handswitch	CR Normal HS in START
	Handswitch	Local Normal HS in START with local control
Emergency	Safety Injection	Train related SI from SSPS K603 or K609 relays
	Bus Undervoltage	27-2X1 Relay - Associated Bus (27-2B) for > 1 sec
	SI Sequencer	SIS/AL - KXA-147C Trn A or KXB-147C Trn B
	Handswitch	CR Emergency HS in START
	Handswitch	Local Emergency HS in START with local control

Generator Control Panel (Figure 25)

The generator control panel is located adjacent to the engine control panel in the diesel generator room and is referred to on drawings as Panel u-DG-01B (u-DG-02B). It serves as a local control and monitoring station. Controls on the panel allow transfer of operation from the remote (control room) station to the local station. When operating the engine in local control, switches on the generator control panel allow starting and stopping the engine in normal or emergency mode, adjustment of engine speed (or load) and adjustment of generator output voltage. A switch is also provided for transferring from the normal to the alternate voltage regulator. The following devices are mounted on the external face of the panel:

- meters for monitoring operation of the generator
- governor control for local engine speed or load adjustment
- voltage regulator controls (voltage adjust, exciter trip and reset, regulator transfer)
- the Master (RLMS) switch (control transfer switch)
- local normal and emergency stop/start switches

Generator output is monitored using current and potential transformers. Output from these devices drives both local and remote instrumentation. Local meters display generator frequency, generator (ac) current and generator (ac) volts. AC volts can be selected to display any of the three output phases. Generator field parameters can be observed on meters for field current (0 to 400 amps dc) and field voltage (0 to 150 VDC).

The Master Switch, also referred to as the RLMS switch for Remote Local Maintenance Switch, is a 3 position (REM, LOCAL, MAINT) maintaining switch used to transfer engine control from the control room (remote) control station to the diesel room (local) control station. It is also used in the MAINT position to disable engine starts. The Norm/Maintenance Keyswitch is enabled to allow placing the engine in MAINTENANCE mode when the Master Switch is in the MAINT position. A LOC-REM-MNT SWITCH NOT IN REMOTE alarm on the engine control panel will actuate whenever the Master Switch is not in REM.

Cooling for cabinet internal components is provided by four door mounted fans. These fans are powered from uEC3-1 (uEC4-1). A three position (OFF, AUTO, ON) control switch, mounted within the cabinet behind the door containing the field ground relays, is used to control the fans. In AUTO, the fans cycle on cabinet temperature reaching 45 C. In the ON position, the fans run continuously. They will not run in the OFF position. When the fans are running, air is drawn into those subcabinets that have fans mounted on them through an accordion-pleated rectangular filter medium. The filter covers a cabinet opening near the floor. The incoming filtered air passes over current carrying components and exits at the top of the cabinets through the fans.

Diesel Generator Trips

Additional trips during normal operation:

- **Lube Oil High Temperature (> 200°F)**
- **Engine Bearing High Temperature (> 228°F)**
- **Engine High Vibration***

- **Turbo High Vibration***
- **Crankcase High Pressure (>3 psig)***
- **Left and Right Bank Turbo Low Oil Pressure (< 15 psig)***
- **Lube Oil Low Pressure (< 30 psig)***
- **Jacket Water High Temperature (> 200°F)***

*** Not active for 60 seconds on Normal Starts.**

Types of Start Signals

Engine start signals are classified as either NORMAL or EMERGENCY. Both types of signals act to start the engine by energizing the starting air admission valves. The engine responds in the same manner to either type of start in that the time it takes to reach rated speed and voltage is a function of other factors such as governor settings. The two signal types differ in the method by which the circuits energize the starting air admission valves and in the way the protective system functions following each type of start.

A NORMAL start signal acts to initialize the pneumatic shutdown system while the engine is starting. If less than 2 minutes have elapsed since the last engine shutdown then, on a normal start signal, the fuel rack shutoff cylinder and the combustion air shutoff cylinders will remain extended and the pneumatic trip system will not initialize. Instead the engine will roll on starting air for 5 seconds without firing and then stop.

An EMERGENCY start signal overrides the 2 minute pneumatic interlock following shutdown, to immediately initialize the pneumatic trip system and start the engine. All engine automatic shutdowns, with the exception of overspeed and phase differential overcurrent, are disabled when an EMERGENCY start signal is maintained.

Engine Emergency Start

An undervoltage condition on the associated 6.9 kv bus (Blackout) or Safety Injection actuation will initiate an Emergency Start of the Diesel Generator. In the case of a Safety Injection Actuation (Train A described, Train B similar) Train A SSPS SI Slave Output Relay u-K609-A will energize and latch in position, closing a contact in the emergency start scheme of the Train A diesel start circuit. The SSPS SI signal will also cause the actuation of the Train A solid state sequencer. When the sequencer fires, it actuates SIS/AL contacts, one of which causes an auxiliary relay to energize (u-KXA/0147C) which, in turn, closes a contact in parallel with the SI contact in the diesel emergency start circuit. Each of these relays (K609-A, KXA/0147C) will remain actuated until the Safety Injection Signal is manually reset. In the case of an undervoltage (Blackout) start signal the 27-2X1 contact will close energizing DX1-1DG1E and sealing in an emergency start signal.

Current will flow through the emergency start circuit when either the undervoltage, SI or the SIS/AL contact closes. Emergency start solenoid 6B energizes in the pneumatic trip system. Solenoid 6B acts to reset any existing pneumatic trip signal (except from engine overspeed) and

defeat all DG auto trips except for overspeed and generator phase differential. These trips will remain defeated as long as solenoid 6B (or 6A from the Channel 1 circuit) is energized.

Start air admission pilot solenoids 1B and 2B will also energize if the associated start air receiver pressure is > 150 psig then the PS-5B contact will be closed. The engine start proceeds normally from this point. An emergency start will continue to supply the engine with start air until either the engine speed exceeds 200 rpm or the PS-5B start air receiver low pressure switch opens at <150 psig. In contrast, a normal start signal is not interrupted by low receiver pressure, but is restricted to < 5 seconds by the TD-2A relay.

The alternative ways to initiate an emergency start are with the remote (control room) or local (generator control panel) emergency stop/start handswitches. Placing the control room emergency start handswitch in START when the engine is in standby will initiate an emergency engine start, similar to the engine start initiated by an SI signal or undervoltage signal. The four position (PULL OUT, STOP, NORM, START) control room emergency stop/start handswitch spring returns to NORM from either the STOP or START positions.

Another contact in the parallel emergency start contact scheme acts to lock-in the start signal from control room emergency stop/start handswitch. The handswitch lock-in contact is operated by CS-1DG1E. The handswitch can be released after an emergency start and allowed to spring return to neutral. The start signal will remain until the switch is taken to stop or pullout.

As with the normal start circuit, there is a local emergency stop/start switch. The three position (STOP, OFF, START) switch spring returns to OFF from the STOP position and is enabled when the Master Switch is placed in LOCAL on the generator control panel. The local emergency start signal functions in the same manner as a remote emergency start initiated by an SI signal or an undervoltage signal.

ANNUNCIATOR NOM./NO.: **DG 1 TRBL** **2.8**

PROBABLE CAUSE:

Diesel generator malfunction

AUTOMATIC ACTIONS: None

OPERATOR ACTIONS:

1. DETERMINE if safeguard bus is energized on V-1EA1-1, BUS 1EA1 VOLT.
   A. IF bus is de-energized,
      THEN
      REFER to ABN-602 for Safeguard 6.9KV Bus Fault.

2. DISPATCH an operator to Sfgd 810 Diesel Generator Room to determine AND correct cause of alarm condition per ALM-1301A.

3. REFER to TS 3.8.1, 3.8.2, 3.8.3, 3.8.9, AND 3.8.10.

4. RESTORE Diesel Generator to operable status per SOP-609A, as directed by Shift Manager.

5. CORRECT the condition OR INITIATE a CR per STA-421, as applicable.

ANNUNCIATOR NO.: **6.8**

LOGIC:

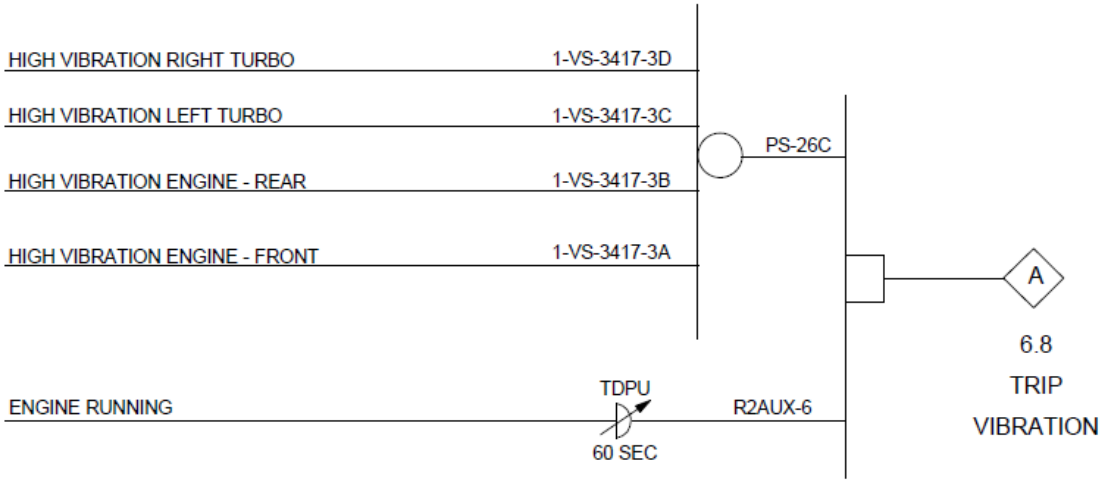

ANNUNCIATOR NOM./NO.: **TRIP VIBRATION** 6.8

PROBABLE CAUSE:

Engine Vibration High:
- Cylinder misfiring - clogged injector, leaky valves, faulty fuel pump
- Worn bearings

Turbo Vibration High:
- Bad bearings
- Worn turbo internals (rubbing)

AUTOMATIC ACTIONS:

IF emergency start signal is NOT present, THEN the Diesel will trip.

OPERATOR ACTIONS:

1. IF the Diesel is NOT required for emergency plant conditions, THEN notify Control Room to ensure the Diesel has tripped.

> CAUTION: If the Diesel is vibrating excessively, clear area until the Diesel can be shutdown and inspected.

2. IF the Diesel is still in operation, THEN determine cause of vibration if possible.

> NOTE: Low temperature on one or more cylinders is indication of uneven load.

ANNUNCIATOR NOM./NO.: **LOW LEVEL JACKET WATER** **4.3**

OPERATOR ACTIONS: (Continued)

NOTE: Hose and fittings are staged in the ABN-501 barrels located in the respective Unit Train A switchgear.

2. C. IF DEMN/RMUW and Fire Protection Water are NOT available and it is desired to fill the JW Standpipe with Station Service Water, THEN perform the following:

   1) Obtain Shift Manager permission to fill JW Standpipe with Station Service Water.
   2) Ensure 1DD-0390, DG 1-01 DEMIN/RMUW JKT WTR STPIPE ISOL VLV closed.
   3) Connect temporary fill hose from 1SW-0308, DG 1-01 JKT WTR CLR SSW OUT VNT VLV to the 2 inch fill connection on the Jacket Water Chemical Feed Pot.
   4) Open 1SW-0308, DG 1-01 JKT WTR CLR SSW OUT VNT VLV.
   5) Open 1DO-0105, DG 1-01 JKT WTR STPIPE 1-01 FILL VLV to fill standpipe.
   6) WHEN standpipe overflows to its drain, THEN close 1DO-0105.
   7) Close 1SW-0308.
   8) Remove AND store temporary fill hose and connectors.
   9) Reinstall the 2 inch fill cap on the Jacket Water Chemical Feed Pot.

3. IF level can NOT be restored OR low Jacket Water Pressure is reached, THEN notify Control Room to shutdown the Diesel.

   A. Ensure 1EB3-4/2M/BKR, DIESEL GENERATOR 1-01 WATER IMMERSION HEATER 1-01 SUPPLY BREAKER is OFF.

4. Notify Control Room to refer to TS 3.8.1 and 3.8.2.

NOTE: DG Jacket Water Leakage ≤ 1.5 gallons per hour AND the LOW LEVEL JACKET WATER alarm clear assures 7 days of continuous DG operation without the need for makeup to the DG Jacket Water System.

5. Determine cause of low standpipe level:
   - External leakage
   - Internal leakage (check lube oil)
   - Intercooler leakage (water in intakes or cylinders)

Examination Outline Cross-Reference	Level	RO	SRO
Rev. Date: 12/22/2014	Tier #	2	n/a
Change: 2	Group #	1	n/a
	K/A #	064 A3.05	n/a
Level of Difficulty: 3	Importance Rating	2.8	n/a

Emergency Diesel Generator: Ability to monitor automatic operation of the ED/G system, including: Operation of the governor control of frequency and voltage control in parallel operation.

Question 23

DG 1-01 has been paralleled to 1EA1 for surveillance testing. While this surveillance is being performed, which ONE of the following is correct?

DG 1-01 will be operating in...

A. ... Isochronous mode and reactive load (VARs) will be determined by the voltage on the grid.

B. ... Isochronous mode and reactive load (VARs) will be determined by the loads on its associated bus.

C. ... Speed Droop mode and with speed droop set at 3%, DG speed will run 3% lower than rated speed regardless of load.

D. ... Speed Droop mode and with speed droop set at 3%, the DG will run slower than rated speed up to a maximum of 3% at full load.

Answer: D

This question matches the KA because it requires knowledge of how the DG controls frequency when in automatic and paralleled.

Explanation / Plausibility:

A. This is incorrect because when operating in parallel, the DG will be operating in Speed Droop mode. It is plausible because when operating alone on the bus, it would be operating in isochronous mode.

B. This is incorrect (see A). If operating separated from the grid, the second part would be correct.

C. This is incorrect because the DG speed will “droop” more as load is increased up to a maximum of 3%. It is plausible because this is a setting on the governor.

D. This is correct. When in parallel, the DG will be operating in Speed Droop mode. DG speed will droop up to a maximum of 3% as the DG becomes fully loaded.

Technical Reference: (Attach if not previously provided including revision number)	Emergency Diesel Generator Study Guide

Proposed references to be provided to applicants during examination: _____

Learning Objective:	EXPLAIN the normal, abnormal and emergency operation of the Emergency Diesel Generator system. (LO21.SYS.ED1.OB23)

Question Source:	Bank #	
	Modified Bank#	
	New	X
Question History:	Last NRC Exam	
Question Cognitive Level	Memory or Fundamental Knowledge	X
	Comprehension or Analysis	
10 CFR Part 55 Content:	55.41	41.7
	55.43	n/a

AC DISTRIBUTION SYSTEM

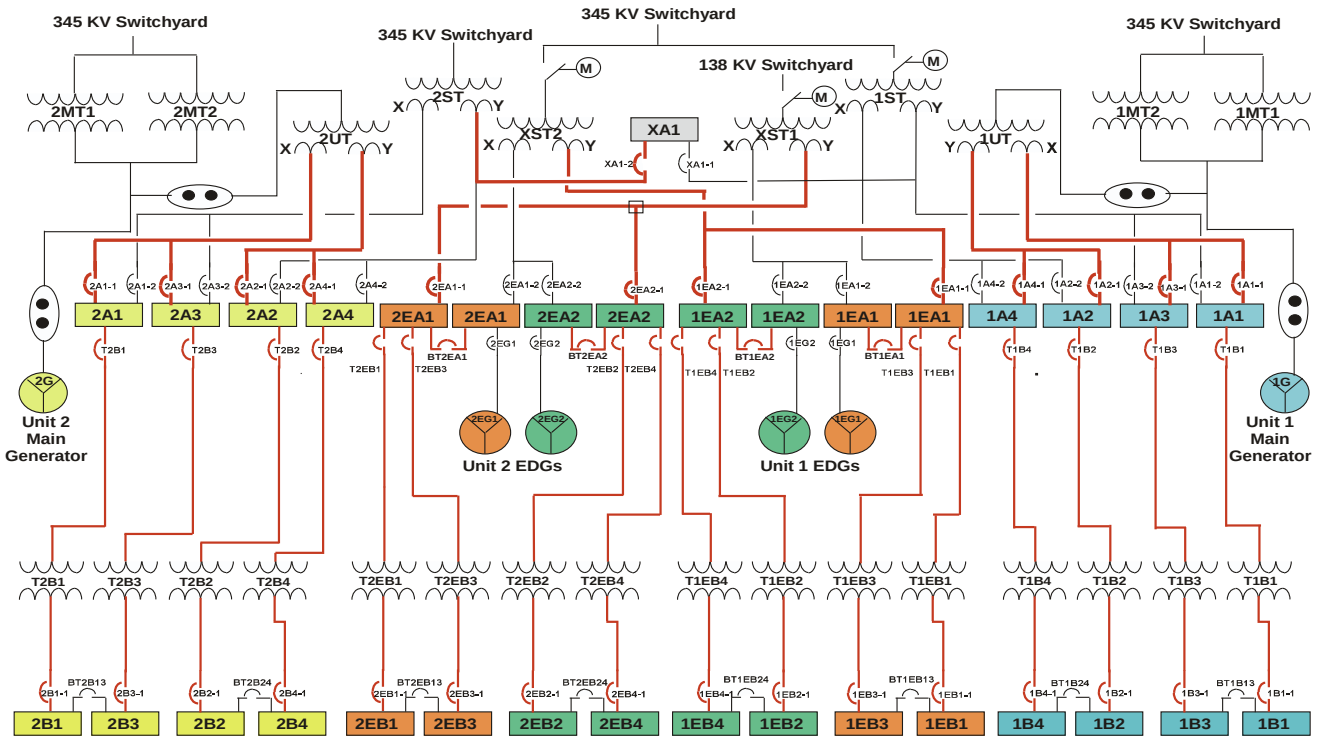

OP51.SYS.AC2.FG01

9-14-04

EMERGENY DIESEL GENERATOR STUDY GUIDE

Modes of Operation

Automatic Voltage Regulator (AVR) Mode

In the AVR Mode, the system has input from the CTs and PTs for automatic control of voltage and VARS. This is the normal mode of control of the voltage regulator.

Exciter Current Regulator (ECR) Mode

This is essentially the Manual Mode of Voltage Regulator Control and still uses the Master Drive Unit to control the excitation current. In this mode, the Operator will need to control the VAR loading as the output from the Master Drive is a set Current signal only with no feedback from the PTs and CTs. When operating in this mode of operation, the ECR light would be lit and the AVR light would be out. If for some reason, the Voltage Regulator shifted to the ECR Mode of control, Meter and Relay would be notified and the reason determined.

Magnetics

If the Voltage Regulator were to trip while operating in the EMERGENCY MODE (SI, Blackout, or Emergency Start), the generator would go into the Magnetics Mode. Basically the generator will supply 6900 vac to the safeguards bus within ± 5% of bus voltage. If the AVR trips during normal operation as indicated by the AVR Trip light being illuminated, the D/G will trip. Meter and Relay assistance would then be needed to reset the AVR.

Voltage Regulator Alarm

A problem with the voltage regulator will be indicated by the VOLTAGE REG SYSTEM TROUBLE alarm on the engine control panel. ALM-1301A/B and ALM-1302A/B alarm procedures have a diagnostic chart to help identify the cause of the problem.

If the DG is operating in the NORMAL mode with the output breaker open or connected to the grid then the control room operator will monitor Kilovars and voltage. If control is unstable then the Operator will open the output breaker and perform a normal shutdown of the DG. If the Kilovars and voltage are stable then Meter and Relay and the D/G System Engineer would be contacted to connect a laptop computer to the Voltage Regulator to determine the cause of the alarm. If the cause cannot be determined within 1 hour or it is determined that continued operation of the D/G could result in damage then the engine would be shutdown.

If the DG is operating in the EMERGENCY Mode due to an ESF actuation and is supplying an isolated electrical safety bus, then if control is unstable, an Operator would be dispatched to place the S600 switch on the Generator Control Panel to trip. This action will place the voltage regulation into Magnetic Control.

Speed Control With Generator Output Breaker Open

With the engine running unloaded (generator output breaker open), at rated speed and ready to load, engine speed can be adjusted by operation of the local or remote speed control switches, depending on which station is selected for control. These three position (LOWER, OFF, RAISE) control switches spring return to OFF from either the LOWER or RAISE positions. The handswitches will not affect controller output for 30 seconds following an emergency start signal. They also have no effect on controller output when generator output voltage is lost. Generator output is sensed by 27-1A and 27-1B relays which act to remove the speed control handswitch input from the governors.

Speed/Load Control During Isochronous Operation

Isochronous operation is the condition where the diesel generator is running alone (i.e., not in parallel with any other sources. In this condition it is desirable that the generator frequency remain relatively constant, regardless of whether electrical load is added or removed from the generator. Frequency is maintained constant by adjusting fuel supply to the engine as necessary to hold engine speed constant.

Isochronous operation requires the governor controller to be directed to hold a constant speed rather than allowing speed to dip as load is applied, as it does when in the speed droop mode. A governor droop (GDR) relay in the engine speed control circuitry performs the function of telling the governor controller whether to operate in the isochronous or speed droop modes. The 125 VDC powered GDR relay is energized to place the controller in isochronous mode whenever both the normal and alternate feeder breakers uEA1-1 and uEA1-2 (uEA2-1 and uEA2-2, Train B) to the associated safeguards bus are open. With these breakers open, the only available remaining source for the bus is the diesel generator.

In this mode, the governor controller attempts to maintain engine speed at the reference setpoint demanded by operation of the speed control switch. In the event of a design basis accident coincident with the loss of both offsite power sources to a safeguards bus, the diesel generator is designed to start, establish ready to load conditions, and automatically close onto its associated safeguards bus through its output breaker. Following output breaker closure, emergency loads are connected to the bus. Throughout the event, by design, bus frequency will remain constant because the diesel is operating in the isochronous mode.

Load Control During Parallel Operation (Figure 36)

The offsite grid determines bus frequency when a diesel generator is paralleled to the grid. Often the grid is referred to as an "infinite bus" because it is so large, relative to the capacity of a diesel, that its parameters cannot be altered by operation of diesel controls. Because of this, the diesel generator has been designed to operate in a speed droop mode when paralleled with an offsite power source during testing.

Speed droop is a feature of the governor controller which modifies the engine speed reference signal based on the load carried by the generator. It is expressed as a percentage of the rated speed of the engine. For example, with a speed droop setting of 3%, the engine speed reference signal will be 3% less than the rated no-load speed when the generator is at full load. It is this feature which provides load stability when the generator is paralleled to the infinite bus.

Examination Outline Cross-Reference	Level	RO	SRO
Rev. Date: 12/22/2014	Tier #	2	n/a
Change: 2	Group #	1	n/a
	K/A #	073 G2.2.39	n/a
Level of Difficulty: 3	Importance Rating	3.9	n/a

Process Radiation Monitoring: Knowledge of less than or equal to one hour Technical Specification action statements for systems.

Question 24

Unit 1 plant conditions:

- Reactor power = 3%
- It is reported that data used for CHANNEL CALIBRATION for all four Control Room Radiation monitors was incorrect which has resulted in <u>all four</u> monitors being declared INOPERABLE

Based on the above conditions, which ONE of the following actions is required In accordance with TS 3.3.7, Control Room Emergency Filtration System (CREFS) Actuation Instrumentation.

A. Secure the Control Room makeup air supply fan from BOTH air intakes OR Place ONE CREFS train in emergency recirculation mode immediately.

B. Secure the Control Room makeup air supply fan from BOTH air intakes OR Place BOTH CREFS trains in emergency recirculation mode immediately.

C. Secure the Control Room makeup air supply fan from BOTH air intakes immediately AND make preparations to shutdown within one hour and be in Mode 3 within 6 hours.

D. Place BOTH CREFS trains in emergency recirculation mode immediately AND make preparations to shutdown within one hour and be in Mode 3 within 6 hours.

Answer: A

This question matches the KA by requiring knowledge of 1 Hr TS that apply to process radiation monitors.

Explanation / Plausibility:

A. Correct per TS 3.3.7. With both trains inoperable for one function, the required action is to Secure the Control Room makeup air supply fan from the affected air intakes (both are affected in this case) **OR** Place ONE CREFS train in emergency recirculation mode immediately

B. This is incorrect because placing both CREFS trains in emergency recirculation mode is not required. It is plausible because the action for either train is to start ONE train of emergency recirculation.

C. This is incorrect because a shutdown is not required. It is plausible because it is the required action if neither of the B actions are performed immediately.

D. This is incorrect because a shutdown is not required. It is plausible because it is the required action if neither of the B actions are performed immediately.

Technical Reference: (Attach if not previously provided including revision number)	Digital Rad Monitoring Study Guide Tech Spec 3.3.7	
Proposed references to be provided to applicants during examination:		Tech Spec 3.3.7
Learning Objective:	APPLY the administrative requirements of the Digital Radiation Monitoring System, including Technical Specifications, TRM and ODCM. (LO21.SYS.RM1.OB06)	
Question Source:	Bank #	
	Modified Bank#	
	New	X
Question History:	Last NRC Exam	
Question Cognitive Level	Memory or Fundamental Knowledge	X
	Comprehension or Analysis	
10 CFR Part 55 Content:	55.41	41.10

55.43	n/a

TECHNICAL SPECIFICATIONS

3.3.3 POST ACCIDENT MONITORING INSTRUMENTATION

This section requires the high range containment area radiation monitor to be operable per the requirements of Table 3.3.3-1. Operability of the accident monitoring instrumentation ensures that sufficient information is available on selected plant parameters for which preplanned manually controlled operator actions are required to accomplish safety functions for recovery from Design Basis Accidents. Examples of operator actions include determining adverse containment conditions, and calculating release rates.

3.3.6 CONTAINMENT VENTILATION ISOLATION INSTRUMENTATION

This section requires the containment air PIG particulate and gaseous channels to be operable per the requirements of Table 3.3.6-1 and 3.4.15. Operability of the CVI instrumentation ensures isolation valves close in the Containment Purge, Hydrogen Purge, and Containment Pressure Relief systems. This action isolates the containment atmosphere from the environment to minimize releases of radioactivity in the event of an accident.

3.3.7 CONTROL ROOM FILTRATION SYSTEM ACTUATION INSTRUMENTATION

This section requires the control room filtration system actuation is operable per the requirements of Table 3.3.7-1 in ALL modes. The CREFS acts to terminate the supply of unfiltered outside air to the control room, initiate filtration, and maintain the control room pressurization. These actions are necessary to ensure the control room is kept habitable for the operators stationed there during accident recovery and post accident operations by minimizing the radiation exposure of control room personnel.

3.3 INSTRUMENTATION

3.3.7 Control Room Emergency Filtration System (CREFS) Actuation Instrumentation

LCO 3.3.7 The CREFS actuation instrumentation for each Function in Table 3.3.7-1 shall be OPERABLE.

APPLICABILITY: According to Table 3.3.7-1

ACTIONS

----------NOTE----------
Separate Condition entry is allowed for each Function.

CONDITION	REQUIRED ACTION	COMPLETION TIME
A. One or more Functions with one channel or train inoperable.	A.1 Place the affected CREFS train(s) in emergency recirculation mode.	7 days
	OR	
	A.2 ----------NOTE---------- Applicable only to Functions 3a and 3b. ---------- Secure the Control Room makeup air supply fan from the affected air intake.	7 days

ACTIONS (continued)

CONDITION	REQUIRED ACTION	COMPLETION TIME
B. One or more Functions with two channels or two trains inoperable.	B.1.1 Place one CREFS train in emergency recirculation mode. AND B.1.2 Enter applicable Conditions and Required Actions for one CREFS train made inoperable by inoperable CREFS actuation instrumentation OR B.2 ----------NOTE---------- Applicable only to Functions 3a and 3b. ---------- Secure the Control Room makeup air supply fan from the affected air intake.	Immediately Immediately Immediately
C. Required Action and associated Completion Time for Condition A or B not met in MODE 1, 2, 3, or 4.	C.1 Be in MODE 3. AND C.2 Be in MODE 5.	6 hours 36 hours
D. Required Action and associated Completion Time for Condition A or B not met in MODE 5 or 6, or during movement of irradiated fuel assemblies.	D.1 Suspend CORE ALTERATIONS. AND D.2 Suspend movement of irradiated fuel assemblies.	Immediately Immediately

Table 3.3.7-1 (page 1 of 1)
CREFS Actuation Instrumentation

FUNCTION	APPLICABLE MODES OR OTHER SPECIFIED CONDITIONS	REQUIRED CHANNELS	SURVEILLANCE REQUIREMENTS	TRIP SETPOINT
1. Manual Initiation	1, 2, 3, 4, 5, and 6, (a)	2 trains	SR 3.3.7.6	NA
2. Automatic Actuation Logic and Actuation Relays	1, 2, 3, 4, 5, and 6, (a)	2 trains	SR 3.3.7.2	NA
3. Control Room Radiation				
a. Control Room Air North Intake	1, 2, 3, 4, 5, and 6, (a)	2	SR 3.3.7.1 SR 3.3.7.2 SR 3.3.7.7	1.4×10^{-4} µCi/ml
b. Control Room Air South Intake	1, 2, 3, 4, 5, and 6, (a)	2	SR 3.3.7.1 SR 3.3.7.2 SR 3.3.7.7	1.4×10^{-4} µCi/ml
4. Safety Injection	Refer to LCO 3.3.2, "ESFAS Instrumentation," Function 1, for all initiation functions and requirements.			

(a) During movement of irradiated fuel assemblies.

Examination Outline Cross-Reference	Level	RO	SRO
Rev. Date: 12/22/2014	Tier #	2	n/a
Change: 2	Group #	1	n/a
	K/A #	076 K3.01	n/a
Level of Difficulty: 3	Importance Rating	3.4	n/a

Service Water: Knowledge of the effect that a loss or malfunction of the SWS will have on the following: Closed cooling water

Question 25

Unit 2 plant conditions:

- Reactor power = 100%
- CCWP 1-01 is operating
- A tube in the CCW HX ruptures

Based on the above conditions, which ONE of the following is correct if CCW Surge Tank level has decreased to 50%.

A. Train A and Train B Safeguards loops and the Non-Safeguards loop are still in service.

B. The Train A Safeguards loop has isolated but Train B Safeguards loop and the Non-Safeguards loop are still in service.

C. The Non-Safeguards loop has isolated but Train A and Train B Safeguards loops are still in service.

D. Train A and Train B Safeguards loops AND the Non-Safeguards loop have isolated.

Answer: A

This question matches the KA by requiring knowledge of how a malfunction of a SSW component (in this case, the CCW/SSW HX) will affect CCW operation.

Explanation / Plausibility:

A. This is correct because on UNIT 2, the “Empty” setpoint on the CCW Surge Tank is 33%. Since level has not decreased to that point, nothing has isolated.

B. This is incorrect because nothing has isolated yet (see A). It is plausible because if it were Unit 1 (57%) and the B CCW pump were operating, it would be correct.

C. This is incorrect because nothing has isolated yet (see A). It is plausible because the Non-Safeguards loop cools equipment of less importance so it makes sense that this would isolate first.

D. This is incorrect because nothing has isolated yet (see A). It is plausible because if it were on Unit 1 (57%), it would be correct.

Technical Reference: (Attach if not previously provided including revision number)	Component Cooling Water Study Guide

Proposed references to be provided to applicants during examination: _____

Learning Objective:	DESCRIBE the components of the Component Cooling Water system including interrelations with other systems to include interlocks and control loops. (LO21.SYS.CC1.OB03)

Question Source:	Bank #	
	Modified Bank#	
	New	X
Question History:	Last NRC Exam	
Question Cognitive Level	Memory or Fundamental Knowledge	
	Comprehension or Analysis	X
10 CFR Part 55 Content:	55.41	41.7
	55.43	n/a

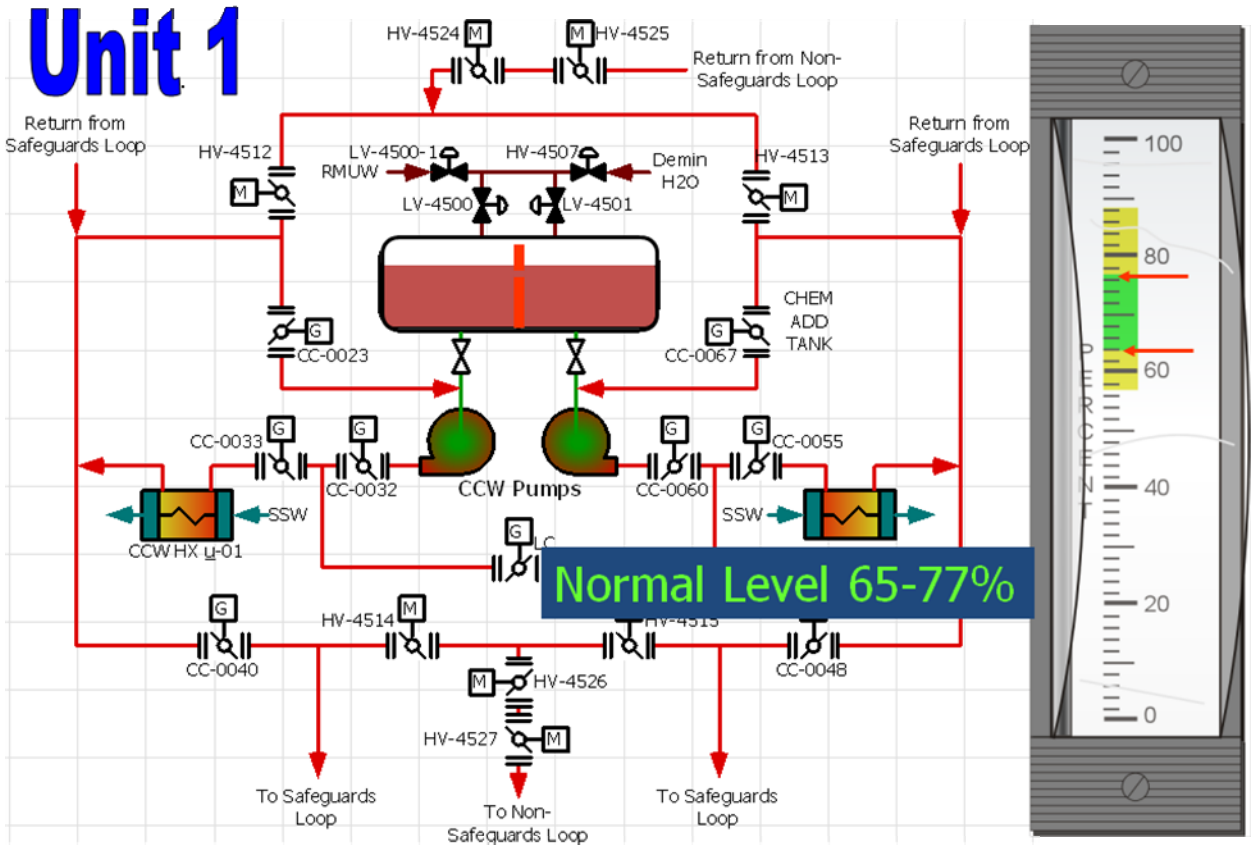
Unit 1
HV-4524
HV-4525
Return from Non-Safeguards Loop
Return from Safeguards Loop
Return from Safeguards Loop
HV-4512
LV-4500-1
RMUW
HV-4507
Demin H2O
HV-4513
LV-4500
LV-4501
CHEM ADD TANK
CC-0023
CC-0067
CC-0033
CC-0032
CCW Pumps
CC-0060
CC-0055
SSW
SSW
CCW HX u-01
Normal Level 65-77%
HV-4514
CC-0040
HV-4526
CC-0048
HV-4527
To Safeguards Loop
To Non-Safeguards Loop
To Safeguards Loop
100
80
60
40
20
0
PERCENT

COMPONENT COOLING WATER STUDY GUIDE

COMPONENTS.

SURGE TANK

There is one surge tank per unit located in the Auxiliary Building at the 873' level. This is approximately 73 feet higher than the pump to provide approximately 34 psig of available NPSH. The tank volume is approximately 4600 gallons, operates at atmospheric pressure and is vented to the Safeguards Building Ventilation System exhaust duct. The surge tank acts as a high point to fill and vent the system, provides a thermal expansion volume, provides a means to prevent overpressure of the system due to in-leakage from the Reactor Coolant System, and is also a collection volume for leakage into the system from various components.

The surge tank is divided into two individual compartments by a partition plate to provide a separate surge volume for each train. Each compartment is sufficient for its respective train. The partition plate extends to within 6 inches of the top of the tank with a six-inch high by thirty six-inch wide opening cut in the partition. Above the bottom of this opening, the surge tank will act as one volume with the trains separated below the opening. The bottom of this opening is at ≈58% level in the Unit 1 surge tank and ≈37 % level for the Unit 2 surge tank, creating a unit difference. The partition is designed to maintain its integrity with one side of the surge tank empty.

Each compartment of the surge tank is equipped with a local reading level gauge glass which is normally isolated. There is also a level transmitter for each compartment, u-LT-4500 for train A and u-LT-4501 for train B. These level transmitters actuate the Low-Low and Empty alarms, provide a signal for the indication in the control room, and initiate automatic actions. There are two additional level switches on each compartment that actuate the Hi-Hi/Low alarms only. These are u-LS-4502A and B for train A and u-LS-4503A and B for train B.

An alarm is generated in the control room at a low level setpoint (65% for Unit 1 and 46% for Unit 2, see figure 6), to alert the operator of the need for makeup. The operator will open the compartment makeup valve and the Reactor Makeup Water System (RMUW) isolation to begin makeup. Normal makeup is from RMUW due to the lower oxygen content of the water. If RMUW is not available, makeup may be from the Demineralized Water System (DWS), but RMUW is the preferred source.

If level continues to decrease, makeup will be automatically initiated at the low-low level setpoint, (63% for Unit 1 and 39% for Unit 2). This signal also causes the compartment isolation valve and the RMUW isolation valve to automatically open.

When level is restored to the Hi level setpoint (77% for Unit 1 and 65% for Unit 2), the compartment isolation valve receives a signal to close. The RMUW isolation valve will remain open until closed by the operator. If level continues to increase, a Hi-Hi level alarm is generated at 88% on Unit 1 and 75% on Unit 2.

If the level in the surge tank reaches the empty setpoint (57% on Unit 1 and 33% on Unit 2), an empty alarm is generated. The empty setpoint will also send a signal to close the safeguards loop isolation valves for the train with the empty alarm. If the signal was generated by the running train, this will isolate flow to the other safeguards train and the non-safeguards loop.

HEAT EXCHANGERS

The CCW heat exchangers are single pass, shell and tube type located on the 790' level of the Auxiliary Building. SSW flows through the tubes with CCW on the shell side. Since SSW contains chlorides, it is essential to keep it from entering the CCW system, which contains or cools many stainless steel components. Therefore, CCW pressure is always maintained higher than SSW pressure. Precautions are in place to ensure the integrity of the CCW system whenever the CCW heat exchanger is depressurized.

There is local indication of inlet temperature and a temperature element (TE) which provides remote indication in the control room, on the plant computer and actuates alarms. On the outlet of the heat exchanger are two temperature elements (TEs), which provide indication in the control room and on the plant computer, and also actuate alarms.

Located on the piping downstream of the heat exchanger is a flow element. This flow element is used for indication of flow out of the heat exchanger in the control room and also controls the recirculation valve. This flow element also inputs to the low heat exchanger flow alarm.

Another flow element is located on the recirculation line that provides indication in the control room of recirculation flow.

Located on the discharge piping of the heat exchanger, before the safeguards loop isolation valve, is a pressure indicating switch. This switch is used to generate a start signal to the other pump on low pressure in the running train.

ANNUNCIATOR NOM./NO.: **CCW SRG TK TRN A/B EMPTY** 2.2

PROBABLE CAUSE:

Failure of manual and automatic makeup
Gross leakage from CCW System

AUTOMATIC ACTIONS:

1-HV-4512, U1 SFGD LOOP TRN A CCW RET VLV, AND 1-HV-4514, U1 SFGD LOOP TRN A CCW SPLY VLV, close
OR
1-HV-4513, U1 SFGD LOOP TRN B CCW RET VLV, AND 1-HV-4515, U1 SFGD LOOP TRN B CCW SPLY VLV, closes

OPERATOR ACTIONS:

1. Determine affected surge tank:
   - 1-LR-4500, TRN A SRG TK LVL
   - 1-LR-4501, TRN B SRG TK LVL

   A. If surge tank level is <57%, ensure affected safeguard loop is isolated.
      Train A
      - 1-HS-4512, SFGD LOOP CCW RET VLV, closed
      - 1-HS-4514, SFGD LOOP CCW SPLY VLV, closed

      Train B
      - 1-HS-4513, SFGD LOOP CCW RET VLV, closed
      - 1-HS-4515, SFGD LOOP CCW SPLY VLV, closed

ANNUNCIATOR NOM./NO.: **CCW SRG TK TRN A/B EMPTY** 2.2

PROBABLE CAUSE:

Failure of manual and automatic makeup
Gross leakage from CCW System

AUTOMATIC ACTIONS:

2-HV-4512, U2 SFGD LOOP TRN A CCW RET VLV, AND 2-HV-4514, U2 SFGD LOOP TRN A CCW SPLY VLV, close.
OR
2-HV-4513, U2 SFGD LOOP TRN B CCW RET VLV, AND 2-HV-4515, U2 SFGD LOOP TRN B CCW SPLY VLV, close.

OPERATOR ACTIONS:

1. Determine affected surge tank:
   - 2-LR-4500, TRN A SRG TK LVL
   - 2-LR-4501, TRN B SRG TK LVL

   A. If surge tank level is <33%, ensure affected safeguard loop is isolated.

      Train A
      - 2-HS-4512, SFGD LOOP CCW RET VLV, closed
      - 2-HS-4514, SFGD LOOP CCW SPLY VLV, closed

      Train B
      - 2-HS-4513, SFGD LOOP CCW RET VLV, closed
      - 2-HS-4515, SFGD LOOP CCW SPLY VLV, closed

Examination Outline Cross-Reference	Level	RO	SRO
Rev. Date: 11/25	Tier #	2	n/a
Change: 1	Group #	1	n/a
	K/A #	078 2.1.23	n/a
Level of Difficulty: 3	Importance Rating	4.3	n/a

Instrument Air: Ability to perform specific system and integrated plant procedures during all modes of plant operation.

Question 26

Unit plant conditions:

0800:

- Reactor power = 50%
- Unit Instrument Air Compressor 1-01 is in Lead
- Unit Instrument Air Compressor 1-02 is in Backup
- Common Instrument Air Compressor X-01 has been lined up to Unit 1 as the Standby IA Compressor
- IA pressure = 98 psig decreasing
- Crew has entered ABN-301, Instrument Air System Malfunction

0804:

- Per the guidance in ABN-301, the crew consults with the Unit 2 Control Room to crosstie the Instrument Air headers in accordance with SOP-509A, Instrument Air System.

Based on the above plant conditions, complete the following statements:

1. At 0800, the Common (Standby) Instrument Air compressor X-01 _____ have automatically started.

2. At 0804, in accordance with the precautions and limitations of SOP-509A, a plant page _____ be made informing personnel of cross tying the instrument air systems.

   A. (1) should
      (2) should

   B. (1) should
      (2) is not required to

   C. (1) should NOT
      (2) should

D. (1) should NOT
(2) is not required to

Answer: C
The question matches the K/A by requiring the ability to recall the procedure steps in the system operating procedure for making plant announcements and operating bands for the compressors depending on their operating mode.

Explanation / Plausibility:

A. 1st part is incorrect because the setpoint for the Common IA compressor when used as the standby IA compressor is 95 psig. It is plausible because the normal setpoint for the backup IA compressor is 100 psig. 2nd part is correct. Per SOP 509A precautions, "Prior to any evolution that affects Instrument Air Header pressure, a Plant Page announcement should be made informing personnel of the evolution.

B. 1st part is incorrect but plausible (see A). 2nd part is incorrect because it is stated in SOP 509 that it should be made. It is plausible because it is not mentioned in ABN-301.

C. 1st part is correct. It should not start until IA pressure decreases to 95 psig. 2nd part is correct.

D. 1st part is correct. 2nd part is incorrect but plausible (see B).

Technical Reference: (Attach if not previously provided including revision number)	ABN-301 SOP-509A

Proposed references to be provided to applicants during examination: _____

Learning Objective: EXPLAIN the instrumentation and controls of the Instrument Air system and PREDICT the system response. (LO21.SYS.IA1.OB04)

Question Source:	Bank #	
	Modified Bank#	
	New	X
Question History:	Last NRC Exam	
Question Cognitive Level	Memory or Fundamental Knowledge	X
	Comprehension or Analysis	
10 CFR Part 55 Content:	55.41	41.10

55.43 n/a

CPNPP ABNORMAL CONDITIONS PROCEDURES MANUAL	UNIT 1 AND 2	PROCEDURE NO. ABN-301
INSTRUMENT AIR SYSTEM MALFUNCTION	REVISION NO. 12	PAGE 6 OF 122

2.3 Operator Actions

ACTION/EXPECTED RESPONSE	RESPONSE NOT OBTAINED
☐ 3 Verify Instrument Air Header Pressure - INCREASING OR STABLE.	Monitor Instrument Air Header Pressure continuously. a. IF header pressure continues to decrease, THEN perform the following: 1) Consult with opposite unit Control Room to crosstie Unit 1 and Unit 2 Instrument Air Headers per SOP-509A.

CPNPP SYSTEM OPERATING PROCEDURE MANUAL	UNIT 1	PROCEDURE NO. SOP-509A
INSTRUMENT AIR SYSTEM	REVISION NO. 22 CONTINUOUS USE	PAGE 6 OF 271

3.0 PRECAUTIONS

- Ensure cooling water is supplied to the compressor and its associated aftercooler when compressor is started OR operating.
- Prior to any evolution that affects Instrument Air Header pressure, a Plant Page announcement should be made informing personnel of the evolution.

NOTE: Upon restoration of power to the air compressor, local alarm lights will be illuminated and will reset automatically upon start.

5.2.1 F. PERFORM the following to ensure power available to Instrument Air Compressor 1-01:

- ☐ ENSURE 1EB3/11D/BKR (1CICO1), INSTRUMENT AIR COMPRESSOR 1-01 FEEDER BREAKER is racked into CONNECT AND Closed.
- ☐ ENSURE CP1-CIDSNB-03, INSTR AIR COMPRESSOR 1-01 CONTROL PNL DISCONNECT SWITCH (LOCAL) is ON.

☐ G. At Instrument Air Compressor 1-01, ENSURE 1-HS-3457A, LEAD/BACKUP SELECTOR SWITCH FOR INST AIR COMPRESSOR 1-01 is in the BACKUP position.

☐ H. ENSURE the UNLOAD/NORMAL Switch on the Instrument Air Compressor 1-01 Panel to UNLOAD.

☐ I. ENSURE OPEN 1CI-0006, INST AIR COMP 1-01 OUT ISOL VLV .

NOTE:
- If an air compressor operates unloaded for approximately 20 minutes, it will automatically shutdown to an Auto-Start condition. The air compressor is in an Auto-Start condition when the Automatic Operation light is ON.
- If an air compressor is in an Auto-Start condition, it will not start until low pressure is sensed (105 psig if in LEAD, 100 psig if in BACKUP). Once low pressure is sensed, the Compressor will start and load.

NOTE: IF the function keys or arrow keys are not used for approximately 4 minutes, THEN the display will automatically return to the Main Screen.

5.4.1 H. At the Elektronikon Control Panel, using function keys AND arrow keys, SCROLL to set X-01 Instrument Air Compressor to either LEAD (Press. Band 1) OR STANDBY (Press. Band 2) as follows:

1. IF desired to return to the Mainscreen,
THEN
PERFORM the following:

☐ a. DEPRESS the F1 function key (beneath << Menu >>).

☐ b. Again, DEPRESS the F1 function key (beneath << Menu >>) to return to Menu.

☐ c. DEPRESS the F1 function key (beneath << Mainscreen >>) to return to Mainscreen.

☐ 2. From the Mainscreen, DEPRESS the F1 function key (beneath << Menu >>).

NOTE: A hi-lited " ➜" next to each menu item shows what will be selected when depressing the tabulator key

☐ 3. Using the arrow keys located above AND below the tabulator key, SCROLL to << Modify Parameters >>.

☐ 4. DEPRESS the tabulator key to select << Modify Parameters >>.

☐ 5. Using the arrow keys located above AND below the tabulator key, SCROLL to << Configuration >>.

☐ 6. DEPRESS the tabulator key to select << Configuration >>.

NOTE:
- IF << Press. Band 1 >> is indicated, THEN the Compressor is in LEAD, AND will control pressure between 105 psig and 115 psig.
- IF << Press. Band 2 >> is indicated, THEN the Compressor is in STANDBY, and will control between 95 psig and 115 psig.

Examination Outline Cross-Reference	Level	RO	SRO
Rev. Date: 12/22/2014	Tier #	2	n/a
Change: 1	Group #	1	n/a
	K/A #	103 K1.02	n/a
Level of Difficulty: 2	Importance Rating	3.9	n/a

Containment: Knowledge of the physical connections and/or cause-effect relationships between the containment system and the following systems: Containment isolation / containment integrity.

Question 27

Complete the following statements regarding manual operation of containment isolation valves.

1. To manually close any air operated containment isolation valve, ____(1)____.

2. This would not be performed on Phase B isolation valves because ____(2)____.

A. (1) the handwheel is rotated in the clockwise direction, forcing the valve to its closed position
(2) if a phase B were to occur, radiation levels would prohibit local operation

B. (1) the handwheel is rotated in the clockwise direction, forcing the valve to its closed position
(2) all phase B containment isolation valves are MOVs

C. (1) air is vented off of the valve which will cause the valve to fail closed
(2) if a phase B were to occur, radiation levels would prohibit local operation

D. (1) air is vented off of the valve which will cause the valve to fail closed
(2) all phase B containment isolation valves are MOVs

Answer: D

This question matches the KA by requiring knowledge of containment penetrations and their relationship to containment isolation.

Explanation / Plausibility:

A. 1st part is incorrect because most containment isolation AOVs do not have a manual handwheel option. It is plausible because some plant AOVs do. 2nd part is incorrect because these valves would be operated if needed. It is plausible because radiation levels would be elevated if a phase B were required..

B. 1st part is incorrect but plausible (see A). 2nd part is correct

C. 1st part is correct. 2nd part is incorrect but plausible (see A).

D. 1st part is correct. 2nd part is correct.

Technical Reference: (Attach if not previously provided including revision number)	Containment Study Guide LO21.SYS.CS1

Proposed references to be provided to applicants during examination: _____

Learning Objective: DESCRIBE the components of the Containment system including interrelations with other systems to include interlocks and control loops. (LO21.SYS.CY1.OB02)

Question Source:	Bank #		
	Modified Bank#		
	New	X	
Question History:	Last NRC Exam		
Question Cognitive Level	Memory or Fundamental Knowledge		X
	Comprehension or Analysis		
10 CFR Part 55 Content:	55.41	41.2 to 41.9	
	55.43	n/a	

Containment Study Guide

Isolation Line Categories -- The lines which penetrate the containment may be divided into three categories:

- Type A -- lines which form part of the reactor coolant pressure boundary (RCPB).
- Type B -- lines which connect directly with the containment atmosphere.
- Type C -- lines which are neither part of the RCPB nor connected to the containment atmosphere usually connecting to a closed system.

Type A penetrations use an isolation scheme with one valve on each side of the containment. These valves may be automatic closure or locked closed type valves or a combination; a check valve is not used as the automatic isolation valve outside the containment. (See Figure 8)

Type B penetrations use the same isolation scheme as Type A with these two additions:

- One blind flange with double o-ring seals inside containment or
- One blind flange inside containment and one blind flange outside containment

TYPE C PENETRATIONS USE ONLY ONE VALVE, WHICH IS LOCATED OUTSIDE THE CONTAINMENT. IT MAY BE AN AUTOMATIC, LOCKED CLOSED OR REMOTE MANUAL OPERATION VALVE BUT IT CANNOT BE A CHECK VALVE.

CONTAINMENT ISOLATION SYSTEM

Containment Isolation System Operation is automatically actuated by signals developed by the engineered safety features actuation system:

Phase A -- Closes all non-essential valves in lines to containment.

- Manual with switches on MCB.
- Any Safety Injection signal

Phase B -- Closes all remaining valves except safety injection valves, containment spray valves, auxiliary feedwater valves, and seal injection.

- Manual with switches on MCB (two of two)
- Hi-3 containment pressure
  - Air Operated Valves (AOV)
  - AOVs fail closed on loss of air or power. Most Phase A AOVs are not provided with manual overrides and can be locally closed by isolating the air supply and venting air pressure with the regulator filter drain valve. When air is isolated to an AOV to permit local isolation, particularly in response to the ERGs, a caution or danger tag should be placed on the handswitch and air supply valve to identify the abnormal alignment. If air is inadvertently realigned, the Containment boundary established by the ERGs could be breached. Isolating the air supply to a Phase A AOV may also affect ERG recovery actions.
  - Solenoid Operated Valves (SOV)
  - SOVs fail closed on loss of power. SOVs are not provided with local position indication. If position indication cannot be verified from the Control Room, the ERGs direct that a manual isolation valve in the flowpath be closed to isolate the penetration. Isolation of manual valves in the flowpath may affect operability of other equipment such as the Containment PIG. Similar to Phase A AOVs which must be locally isolated, a caution or danger tag should be placed on the manual valve and the SOV handswitch when local isolation of the SOV is required. Likewise, isolating manual valves may affect ERG recovery actions.

- Phase B closes all remaining valves except safety injection valves, containment spray valves, and auxiliary feedwater valves. (CCW non-safeguards loops, RCP motor, lube oil and thermal barrier cooling). All Phase B valves are required to be operable per Technical Specifications. All Phase B valves are MOVs. Any Phase B valve which does not reposition in response to a signal (assuming power is available) did not function as required and the cause must be investigated and corrected prior to declaring the valve operable. Actuated by either of the following:

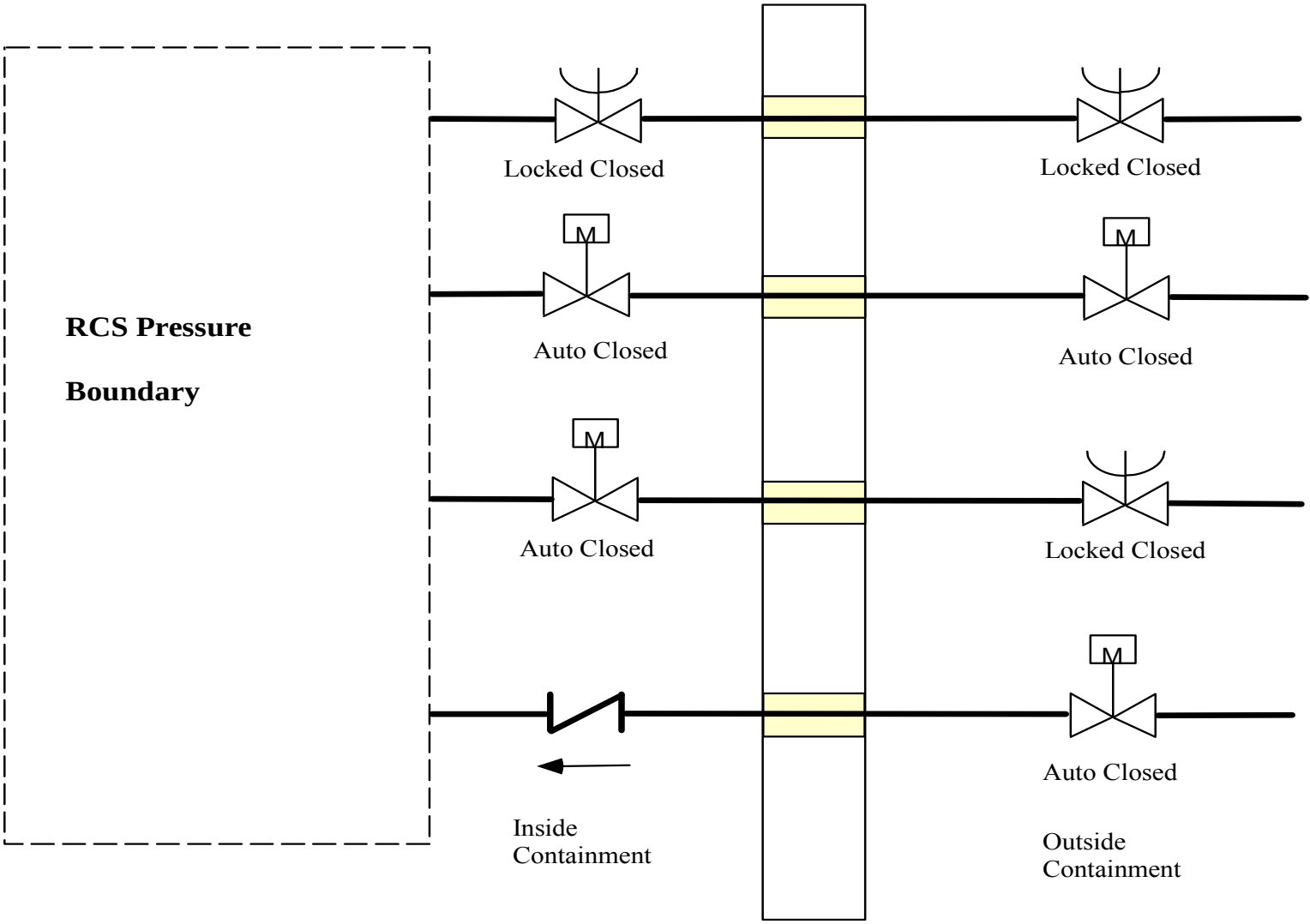
RCS Pressure
Boundary
Locked Closed
Locked Closed
M
M
Auto Closed
Auto Closed
M
Auto Closed
Locked Closed
M
Auto Closed
Inside
Containment
Outside
Containment

OP51.SYS.CY1

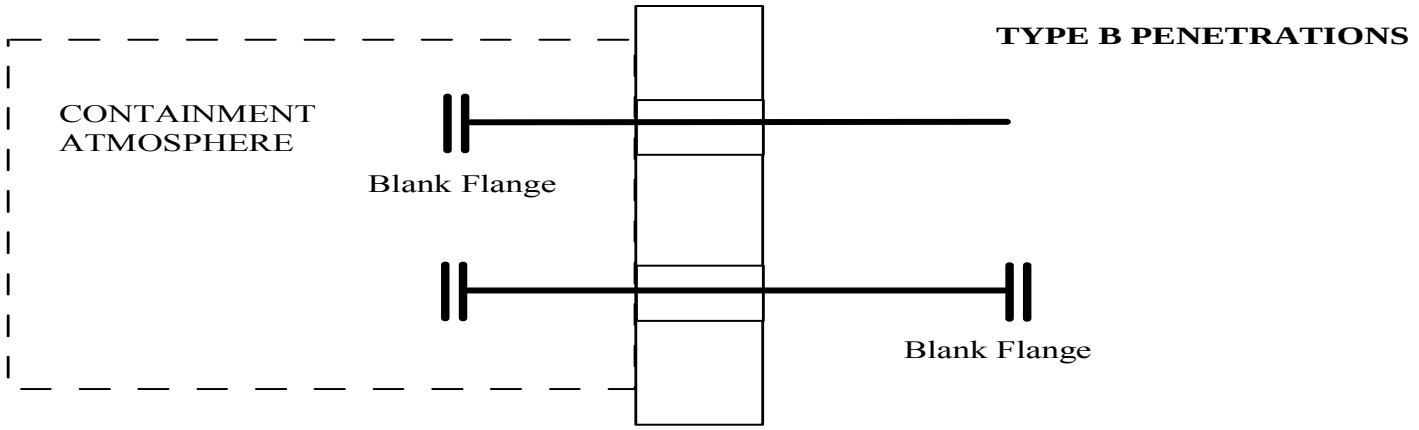
TYPE B PENETRATIONS
CONTAINMENT
ATMOSPHERE
Blank Flange
Blank Flange

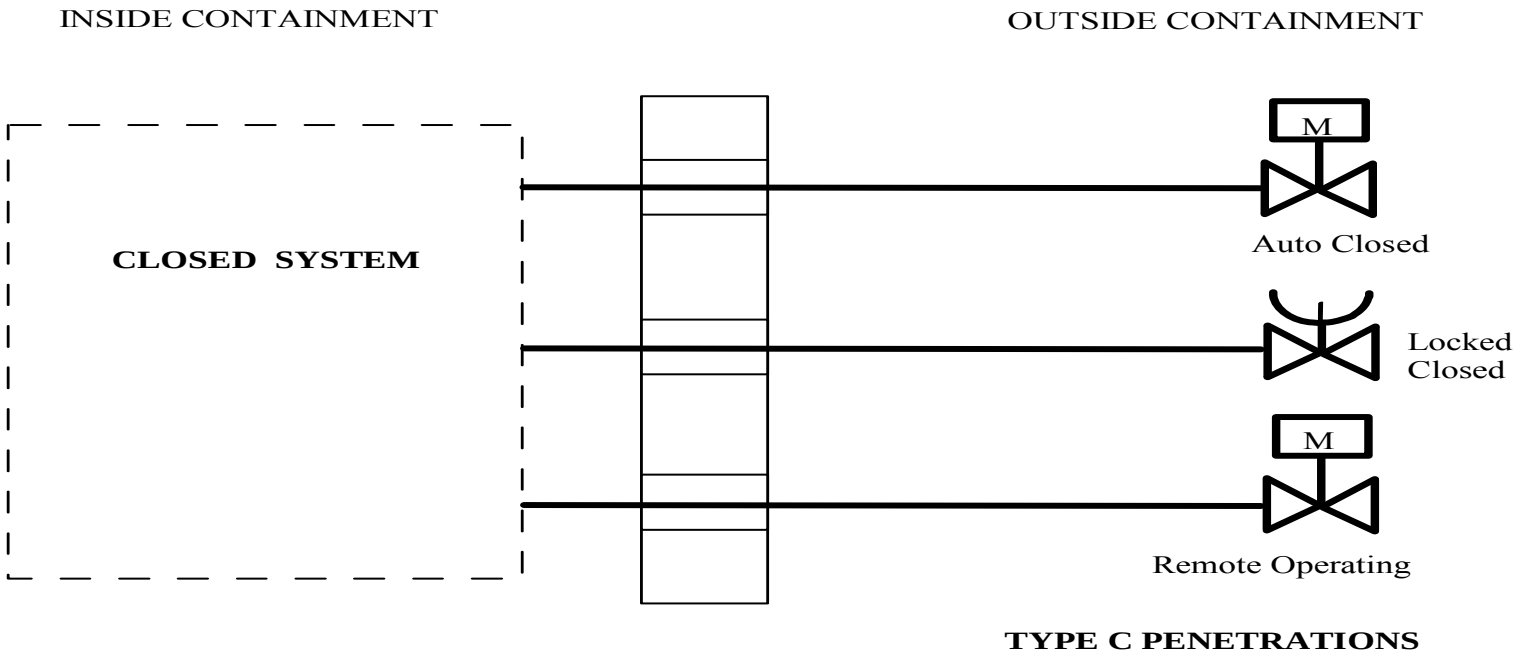
INSIDE CONTAINMENT
OUTSIDE CONTAINMENT
CLOSED SYSTEM
M
Auto Closed
Locked
Closed
M
Remote Operating
TYPE C PENETRATIONS

CHEMICAL & VOLUME CONTROL STUDY GUIDE

RCP SEAL WATER RETURN LINE ISOLATION

The seal water return containment isolation valves are in-series, motor operated containment boundary isolations for the seal water return line. RCP Seal Water Return Isolation, u-8112, powered from Class 1E safeguards bus Motor Control Center uEB3-2, is located on the 808 foot elevation of containment, above the north sump. RCP Seal Water Return Isolation, u-8100, powered from Class 1E safeguards bus Motor Control Center uEB2-1, is located on the 810 elevation in the safeguards building penetration room.

These valves are controlled from three position (CLOSE, AUTO, OPEN) switches on CB-05. Both switches spring return to AUTO from either the CLOSE or OPEN positions. Position indication is provided on the valve handswitches. A close position limit switch on each valve provides input to the plant computer and to a light on a monitor light box on CB-02.

RCP Seal Water Return Isolation, u-8112 will automatically close on a Train A Containment Isolation Phase A signal. RCP Seal Water Return Isolation, u-8100 will automatically close on a Train B Containment Isolation Phase A signal.

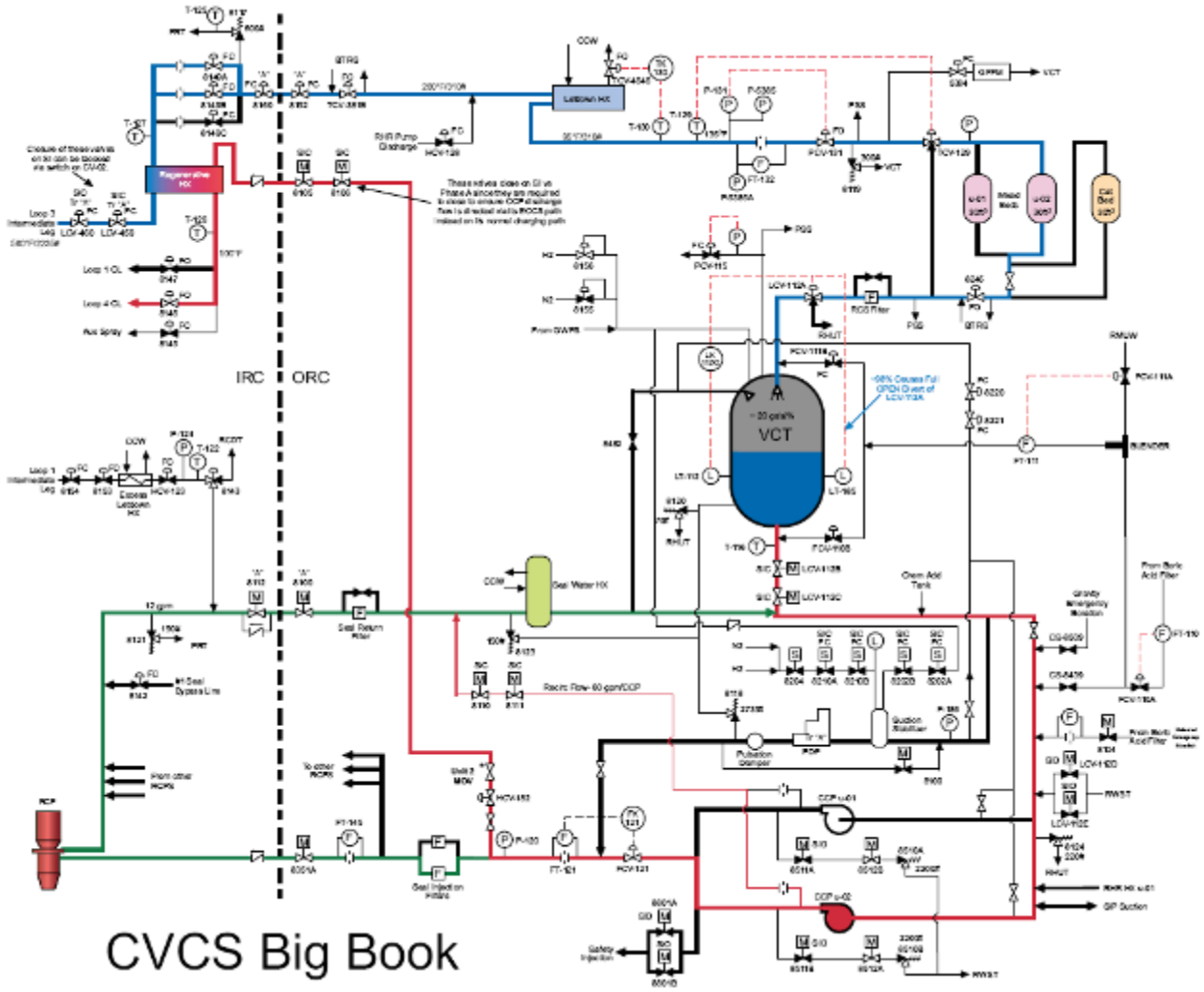
IRC
ORC
VCT
Regenerative HX
Letdown HX
Seal Water HX
Seal Return Filter
Seal Injection Filter
Boric Acid Tank
Chem Add Tank
Pulsation Dampener
Suction Stabilizer
RCP
CCP u-01
CCP u-02
RWST
BLENDER
RMUW
RCS Filter
Safety Injection
SIP Suction
Reactor Flow 60 gpm/CCP
Shift Pump Discharge
Loop 1 CL
Loop 4 CL
Aux Spray
CCW
RHUT
PGS
From SWPS
From other RCPs
To other RCPs
#1 Seal Bypass Line
Grandy Emergency Boration
From Boric Acid Filter
Fresh Boric Acid Filter
Reactor Flow 60 gpm/CCP
CVCS Big Book

Examination Outline Cross-Reference	Level	RO	SRO
Rev. Date: 12/22/2015	Tier #	2	n/a
Change: 1	Group #	1	n/a
	K/A #	103 A1.01	n/a
Level of Difficulty: 2	Importance Rating	3.7	n/a

Containment: Ability to predict and/or monitor changes in parameters (to prevent exceeding design limits) associated with operating the containment system controls including: Containment pressure, temperature, and humidity.

Question 28

Unit 1 plant conditions:

- Large Break LOCA has just occurred
- Containment pressure = 23 psig increasing
- Phase B Containment Isolation has not occurred

Based on the above conditions, complete the following statements:

1. _____ PHASE B MAN ACT hand switch(s) has(have) to be taken to ACT to initiate BOTH trains Phase B equipment.

2. Initiating Containment Spray should prevent containment pressure from exceeding its design of _____.

   A. (1) Only one
      (2) 48 psig

   B. (1) Only one
      (2) 50 psig

   C. (1) Both
      (2) 48 psig

   D. (1) Both
      (2) 50 psig

Answer: D

This question matches the KA by requiring knowledge of how containment systems are operated to prevent exceeding design pressure.

Explanation / Plausibility:

A. 1st part is incorrect because it requires both switches taken to ACT to manually initiate Phase B / Containment Spray. It is plausible because each switch will activate components in both trains. 2nd part is incorrect because the design pressure is 50 psig. It is plausible because 48.3 psig is the postulated peak pressure generated during a design basis LOCA.

B. 1st part is incorrect but plausible (see A). 2nd part is correct.

C. 1st part is correct. 2nd part is incorrect but plausible (see A).

D. 1st part is correct. 2nd part is correct.

Technical Reference: (Attach if not previously provided including revision number)	Containment Study Guide
	LO21.SYS.CS1
	TS Bases 3.6.4

Proposed references to be provided to applicants during examination: _____

Learning Objective: DESCRIBE the components of the Containment system including interrelations with other systems to include interlocks and control loops. (LO21.SYS.CY1.OB02)

Question Source:	Bank #		
	Modified Bank#		
	New	X	
Question History:	Last NRC Exam		
Question Cognitive Level	Memory or Fundamental Knowledge		X
	Comprehension or Analysis		
10 CFR Part 55 Content:	55.41	41.5	
	55.43	n/a	

Containment Study Guide

INSTRUMENTATION & CONTROL

PRESSURE

Three different ranges of containment pressure indicate on the MCB.

- Narrow range (2 channels) CNTMT PRESS (NR); PI 5470A (5470B)

Digital readouts on CB-03 Range -2.5 psig to 2.5 psig

Alarm CNTMT NR PRESS HI/LO, window 4.6 on ALB-3A, has a setpoint High of □1.2263 psig and a setpoint Low of □ - 0.2263 psig.

- Wide range (2 channels), CNTMT PRESS (WR); PI-938 (939) on CB-03, has scale of 0-150 psig and provides indication only.
- Intermediate range (4 channels), CNTMT PRESS (IR) CHAN I (II, III, IV); PI-937 (936,935,934) on CB-03, provides indication, alarms, and protection.

Indication Scale -5 to 60 psig

Alarms: CNTMT PRESS 1 of 3 HI 1, yellow window 1.10 on ALB-2B, has a setpoint of >3.2 psig on 1/3 channels: HI 1 (2/3) generates SI. Uses channels II, III, IV, (936, 935, 934)

CNTMT PRESS 1 of 3 HI 2, yellow window 2.10 on ALB-2B, has a setpoint > 6.2 psig on 1/3 channels: HI 2 (2/3) generates Main Steam Line Isolation. Uses channels II, III, IV (936,935,934.)

CNTMT PRESS 1 of 4 HI 3, yellow window 3/10 on ALB-2B, has a setpoint of > 18.2 psig on 1/4 channels: HI 3 (2/4) generates CS and Phase B Containment Isolation. Uses all four channels.

CNTMT PRESS HI SI ACT, "First Out" annunciator on ALB-6C, has a setpoint > 3.2 psig on 2/3 channels and uses channels II, III, IV. Actuates Reactor Trip, SI, and Phase A Isolation.

CNTMT ISOL PHASE B ACT, red window 4.11 on ALB-2B, has a setpoint > 18.2 psig on 2/4 channels and alarms on manual actuation as well as automatic initiation. Uses all four channels and generates CS Actuation and Phase B Isolation.

Manual Actuation/Reset Controls

CNTMT ISOL PHASE A/CNTMT VENT ISOL MAN ACT hand switches

- Requires turning hand switches from NORM to ACT to actuate both trains of protection. One hand switch located on CB-02, Second hand switch located on CB-07
- Generates Phase A and Containment Ventilation Isolation signals to both trains

CNTMT ISOL PHASE A RESET push buttons

- Each pushbutton is train related, i.e., both push buttons must be depressed to reset both trains.
- Both are located on CB-02 and remove Phase A Isolation signal only.

CNTMT VENT ISOL RESET push buttons

- Each pushbutton is train related, i.e., both push buttons must be depressed to reset both trains. Both are located on CB-02
- Removes Containment Ventilation Isolation signal only

CS/CNTMT ISOL PHASE B MAN ACT hand switches

- Requires turning 2/2 hand switches from NORM to ACT at either location to actuate protection (each switch supplies both trains of protection, but both switches must be operated to generate the protection signal)
- One set of switches located at CB-02. Second set of hand switches located at CB-07.
- Generates CS Actuation and Phase B Isolation
- Phase B Isolation isolates the non-safeguards loop of CCW and isolates the CCW loop for the RCP thermal barrier

Electrical Penetration Assemblies -- The function of the penetration assemblies is to provide continuity of electric circuits through the containment integrity. This is accomplished by sealing the electrical conductors in a glass reinforced module. The module is then sealed to the header plate using double seals, and the header plate is sealed to the flange by concentric o-rings. (See Figure 6)

The seals must maintain a pressure greater than the calculated peak containment internal pressure of a Designed Based Accident (48.3 PSIG), in order to maintain containment integrity. The penetrations are pressure tested on a periodicity that can be extended to up to ten years, based on the past leakage performance of each penetration.

B 3.6 CONTAINMENT SYSTEMS

B 3.6.4 Containment Pressure

BASES

BACKGROUND The containment pressure is limited during normal operation to preserve the initial conditions assumed in the accident analyses for a loss of coolant accident (LOCA) or steam line break (SLB). These limits also prevent the containment pressure from exceeding the containment design negative pressure differential with respect to the outside atmosphere in the event of inadvertent actuation of the Containment Spray System.

Containment pressure is a process variable that is monitored and controlled. The containment pressure limits are derived from the input conditions used in the containment functional analyses and the containment structure external pressure analysis. Should operation occur outside these limits coincident with a Design Basis Accident (DBA), post accident containment pressures could exceed calculated values.

APPLICABLE SAFETY ANALYSES

Containment internal pressure is an initial condition used in the DBA analyses to establish the maximum peak containment internal pressure. The limiting DBAs considered, relative to containment pressure, are the LOCA and SLB, which are analyzed using computer pressure transients.

The containment was designed for an internal pressure load equivalent to 50 psig. The LOCA and SLB are examined under a variety of initial conditions to ensure that the containment design limit is not exceeded. Although only two cases can yield pressure and temperature peaks, there are several cases that are near these peaks; furthermore, the time to the maximum temperature or pressure also varies with the assumed initial conditions. The full spectrum of cases for both LOCA and SLB transients determines the envelopes for which plant equipment is qualified. The containment was also designed for an internal pressure load equivalent to -5 psig. The inadvertent actuation of the Containment Spray System was analyzed to determine the resulting reduction in containment pressure. The initial pressure condition used in this analysis was -0.5 psig. This resulted in a minimum pressure greater than the design load.

Examination Outline Cross-Reference	Level	RO	SRO
Rev. Date: 12/22/2014	Tier #	2	n/a
Change: 1	Group #	2	n/a
	K/A #	001 K5.59	n/a
Level of Difficulty: 3	Importance Rating	2.7	n/a

Control Rod Drive: Knowledge of the following operational implications as they apply to the CRDS: Reasons for overlap of control rod banks for withdrawal and insertion

Question 29

Unit 1 plant conditions:

- Reactor startup is in progress
- Reactor power = 10^3 cps
- Control Rod Bank C (CBC) is at 105 steps

Which ONE of the following states the reason for control rod bank overlap, and based on the above conditions, the status of Control Rod Bank D (CBD)?

A. Control Rod “Bank Overlap” is designed to ensure a more uniform differential rod worth and currently, CBD has started to withdraw.

B. Control Rod “Bank Overlap” is designed to ensure a more uniform differential rod worth but currently, CBD is still fully inserted.

C. Control Rod “Bank Overlap” is designed to ensure axial flux distribution does not exceed limits and currently, CBD has started to withdraw.

D. Control Rod “Bank Overlap” is designed to ensure axial flux distribution does not exceed limits but currently, CBD is still fully inserted.

Answer: B

This question matches the K/A by requiring knowledge of the reason for control rod bank overlap.

Explanation / Plausibility:

A. Incorrect when CBC is withdrawn past 107 steps, CBD will start to withdraw. It is plausible because if three more steps out, it would be correct.

B. Correct, CDB has not started withdrawing yet.

C. Incorrect because bank overlap is to ensure a more uniform differential rod worth. It is plausible because axial flux in the core would shift more without bank overlap however, at such low power, axial flux would not approach any limits.

D. Incorrect but plausible (see C & A).

Technical Reference: (Attach if not previously provided including revision number)	Rod Control Study Guide

Proposed references to be provided to applicants during examination: _____

Learning Objective: EXPLAIN the instrumentation and controls of the Rod Control System and PREDICT the system response. (LO21.SYS.CR1.OB04)

Question Source:	Bank #	
	Modified Bank#	
	New	X
Question History:	Last NRC Exam	
Question Cognitive Level	Memory or Fundamental Knowledge	
	Comprehension or Analysis	X
10 CFR Part 55 Content:	55.41	41.5
	55.43	n/a

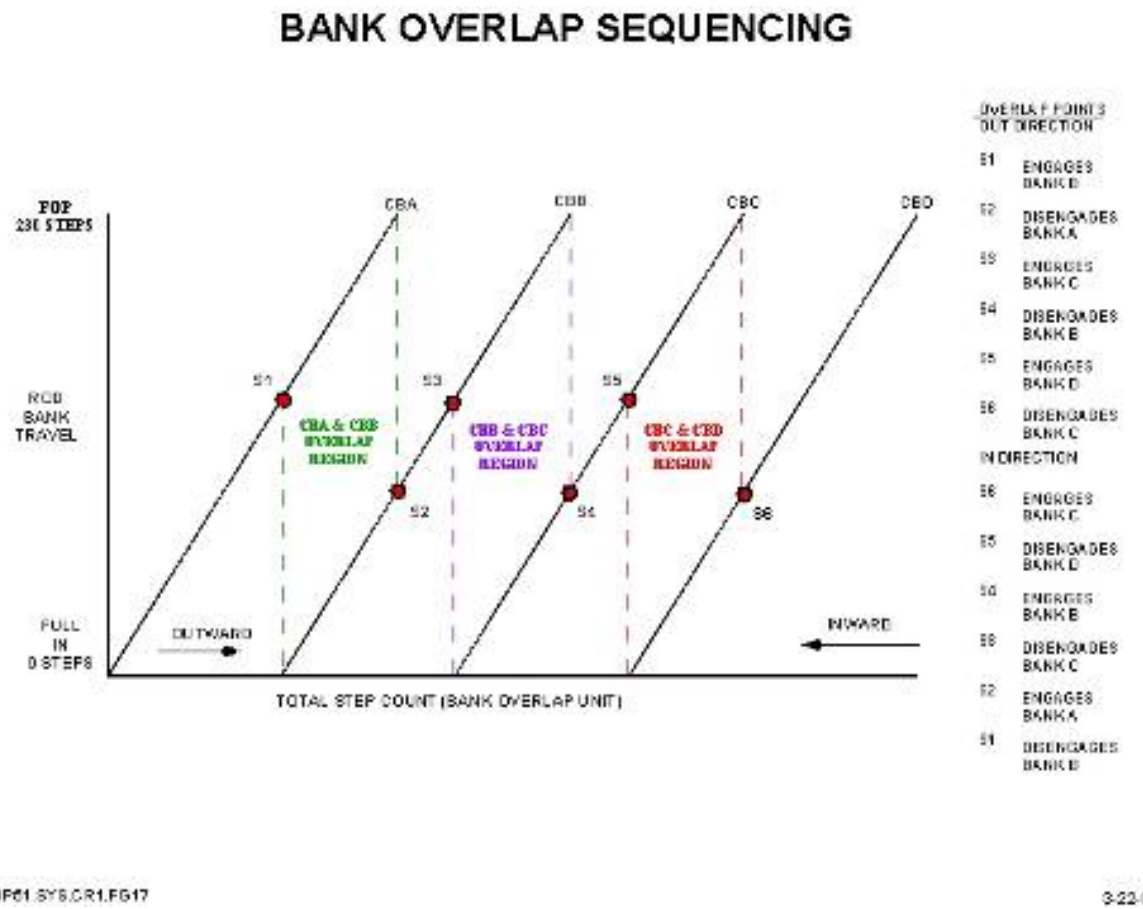

ROD CONTROL STUDY GUIDE

Bank Overlap Unit

The extent to which one step of a control bank's motion affects reactivity is dependent on the neutron population at the tip of the rod cluster. When a given bank of rods is near the top or bottom of the core, a step is not as effective in changing reactivity as the same step would have been if the bank were near the middle of the core. For this reason, the control banks are overlapped for 107 steps during withdrawal and insertion to achieve a more constant reactivity insertion rate.

During overlap, two banks move in unison, with group 1 from both banks stepping together, and then group 2.

Examination Outline Cross-Reference	Level	RO	SRO
Rev. Date: 12/22/2014	Tier #	2	n/a
Change: 1	Group #	2	n/a
	K/A #	011 K2.02	n/a
Level of Difficulty: 2	Importance Rating	3.1	n/a

Pressurizer Level Control: Knowledge of bus power supplies to the following: PRZR heaters

Question 30

Which ONE of the following is correct regarding the power supply to Pressurizer Heaters?

Pressurizer control group heaters (Group C) are supplied from:

A. 480 VAC Safeguard Bus 1EB1 and can be operated from the Remote Shutdown Panel.

B. 480 VAC Safeguard Bus 1EB1 and can NOT be operated from the Remote Shutdown Panel.

C. 480 VAC Non-Safeguard Bus 1B1 and can be operated from the Remote Shutdown Panel.

D. 480 VAC Non-Safeguard Bus 1B1 and can NOT be operated from the Remote Shutdown Panel.

Answer: B

This question matches the KA by requiring knowledge of the power supplies for Pzr heaters.

Explanation / Plausibility:

A. Incorrect because it cannot be operated for the RSP. It is plausible because Przr Heater Gp A&B can be operated from the RSP.

B. Correct.

C. Incorrect because the Pzr heater are powered from Safeguards 480VAC. Plausible because they will de-energize upon receiving an SI signal so they are not used when other safety equipment is utilized.

D. Incorrect (See A & C).

Technical Reference: (Attach if not previously provided including revision number)	6.9 and 480v Study Guide Reactor Coolant System Study Guide

Proposed references to be provided to applicants during examination: _____

Learning Objective:	DESCRIBE the components of the Reactor Coolant system including interrelations with other systems to include interlocks and control loops. (LO21.SYS.RC1.OB03)

Question Source:	Bank #	
	Modified Bank#	
	New	X
Question History:	Last NRC Exam	
Question Cognitive Level	Memory or Fundamental Knowledge	X
	Comprehension or Analysis	
10 CFR Part 55 Content:	55.41	41.7
	55.43	n/a

Reactor Coolant System Study Guide

Pressurizer Heaters

Seventy-eight (78) vertically mounted heating elements are installed in the PRZR lower hemispherical head and are divided into groups A, B, C, and D. Together, all groups have a combined total heating capacity of 1,802 KW. Each of Groups A and B have 21 heating elements and a heat capacity of 485 KW. Each of Groups C and D has 18 heating elements and a heat capacity of 416 KW.

Groups A, B, and D are "backup heaters." Backup heaters energize by closing their power supply breakers in switchgear uEB2, uEB3 and uEB4. Each group has a three-position maintained (OFF-AUTO-ON) handswitch located on CB05. Backup heaters may be manually energized by placing the handswitch in ON or manually de-energized by placing the handswitch in OFF. A signal from the master pressure controller and by a pressurizer level deviation high of 5% above program energizes backup heaters when the handswitch is in AUTO. Groups A and B may be operated from the Remote Shutdown Panel.

Group C "control heaters" are often referred to as variable or proportional heaters. The pressurizer master pressure controller varies the output of the control heaters. They are operated by a three-position (OFF-neutral-ON) spring-return to center handswitch located on CB05. Taking the handswitch to the ON position and releasing it to the center position closes the power supply breaker in switchgear uEB1, energizing the control heaters. A silicon controlled rectifier (SCR) circuit supplies power to the heater elements using a time-proportioned average output voltage based on the control signal from the master pressure controller. This means that full 480 VAC power supplies the heaters in pulses such that the average voltage supplied over time is proportional to the pressure controller output. The power supply breaker for the control heaters does not automatically close.

Safety Injection (SI), low pressurizer water level (17%), and low bus voltage automatically trip the power supply breakers for the backup and control heaters. Operators monitor electrical current indication for each heater group, using meter displays above the handswitches on CB05.

The 480 volt buses receive power from their respective 6.9KV buses via 480 volt transformers located in the train associated switchgear rooms in the Safeguards Building 810' and 852' levels (**Figure 3**).

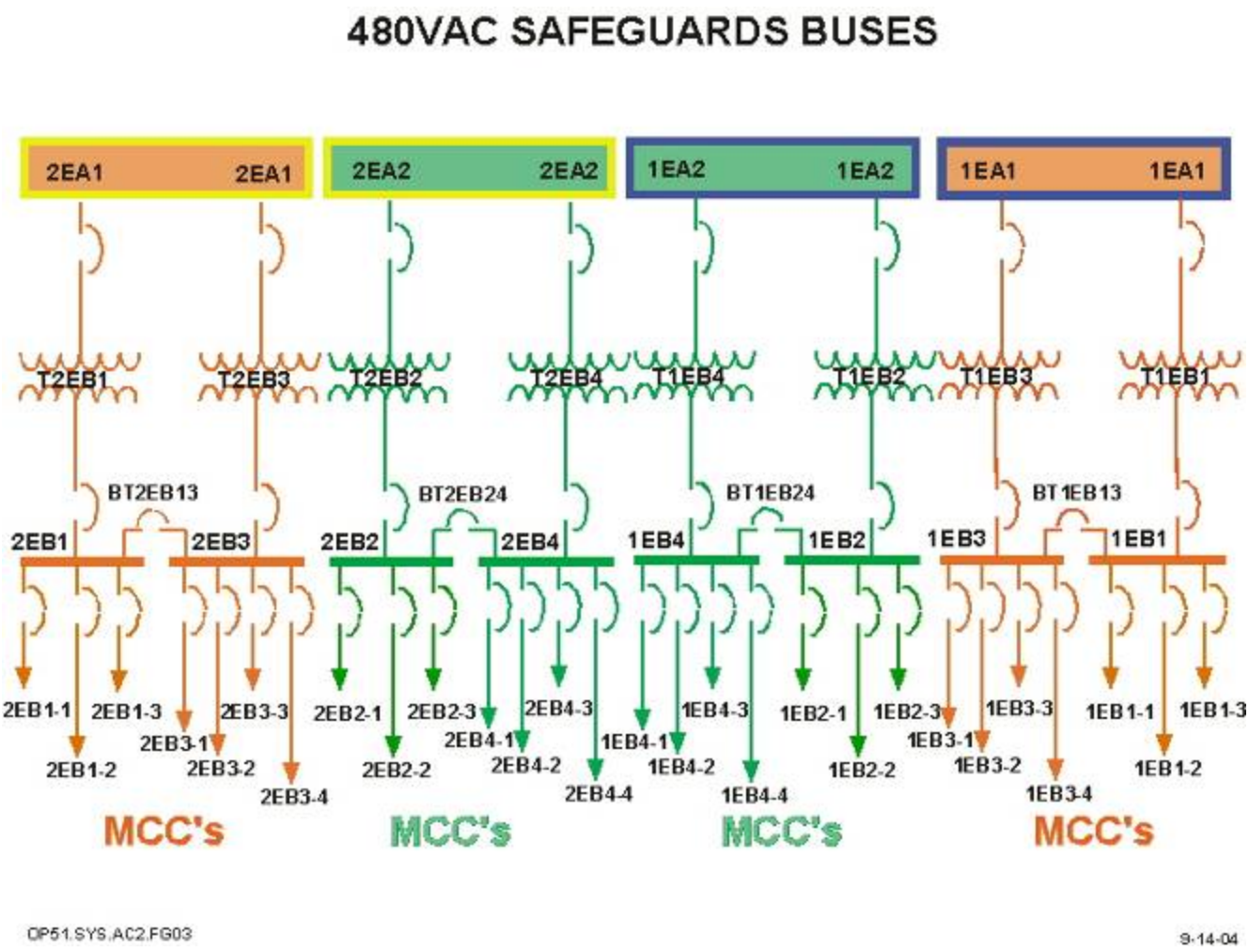

Figure 3 - 480v AC Safeguards Buses

As an alternate source of power, each 480v bus has a manual tie breaker with the other train related 480v bus which may be shut if normal power is lost. Interlocks require the normal power supply breaker to be opened prior to closing this manual tie breaker.

Each bus supplies various motor loads and MCCs via manual breakers.

The 6.9KV to 480v AC step down transformers are contained in a housing adjacent to the associated bus. These transformers are cooled by forced air flow by fans contained in the bottom of the housing and controlled from the front of the housing.

NON-SAFEGUARDS 480V AC DISTRIBUTION

The Non-Safeguards 480v AC buses are located within the switchgear rooms in each plant's 810' level of Turbine Building. These buses receive their normal power from the Non-Safeguards 6.9KV buses via a step down transformer that is adjacent to each bus (**Figure 5**). Alternate power is available via a normally open bus tie breaker to another Non-Safeguards 480v AC bus.

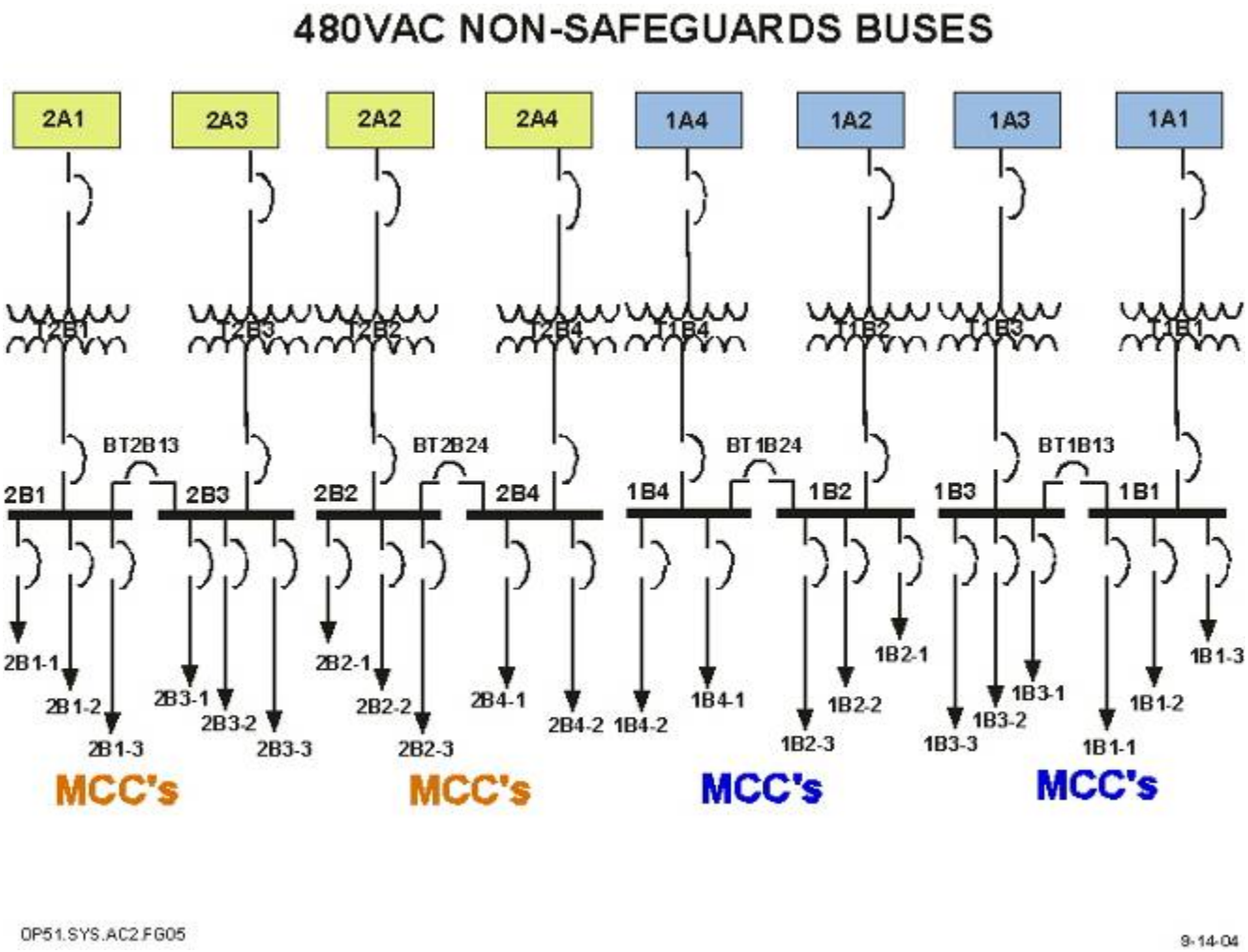

Figure 5 - 480v AC Non-Safeguards Buses

These buses provide power to various motor control centers (MCC's) throughout the plant and the Control Rod Motor Generators as well as various smaller pumps in the Turbine Building.

Examination Outline Cross-Reference	Level	RO	SRO
Rev. Date: 1/15/2015	Tier #	2	n/a
Change: 4	Group #	2	n/a
	K/A #	014 K3.02	n/a
Level of Difficulty: 2	Importance Rating	2.5	n/a

Rod Position Indication - Knowledge of the effect that a loss or malfunction of the RPIS will have on the following: Plant computer

Question 31

Unit 1 plant conditions:
0800

- Reactor startup is in progress.
- CBD position:
  - DRPI = 40 steps
  - Step Counters = 40 steps

0830

- CBD position:
  - DRPI = 48 steps
  - Step Counters = 54 steps

Based on the above conditions, at 0830 the plant computer will display CBD position as __(1)__ steps withdrawn and if the reactor were to subsequently trip, it would display __(2)__ steps withdrawn.

A. (1) 48 steps
   (2) 0 steps

B. (1) 48 steps
   (2) 48 steps

C. (1) 54 steps
   (2) 0 steps

D. (1) 54 steps
   (2) 54steps

Answer: C

This question matches the KA by requiring knowledge of how a malfunction in the Rod Position Indication system affects the plant computer display.

Explanation / Plausibility:

A. 1st part is incorrect. It is plausible because DRPI has remained at 48 steps withdrawn. 2nd part is correct. P4 will reset the computer display to 0 steps withdrawn.

B. 1st part is incorrect but plausible (see A). 2nd part is incorrect because the plant computer resets (goes to 0) when a P4 signal is received. It is plausible because the signal is derived from the same signal that goes to the step counters.

C. 1st part is correct. The signal from the data logging circuitry sends information to the step counters as well as the plant computer. 2nd part is correct. The computer resets when a P4 signal is received.

D. 1st part is correct. 2nd part is incorrect but plausible because the step counters do not go to 0 when a trip occurs. They have to be reset.

Technical Reference: (Attach if not previously provided including revision number)	Rod Position Indication Study Guide

Proposed references to be provided to applicants during examination: _____

Learning Objective: DISCUSS overall operation of the Rod Control and digital Rod Position Indication systems. (LO21.SST.ROD.OB01)

Question Source:	Bank #	
	Modified Bank#	
	New	X
Question History:	Last NRC Exam	
Question Cognitive Level	Memory or Fundamental Knowledge	
	Comprehension or Analysis	X
10 CFR Part 55 Content:	55.41	41.7

Rod Position Indication Study Guide

Bank Demand Position Indication System

The Bank Demand Position Indication System, commonly called the "step counters," count the pulses generated by the Rod Control System as it generates the signals to move that group. This system determines where the control rod groups should be. Each rod in a group receives the same signal to move; therefore, each rod should be at the position indicated by the bank step counter for its group. However, if the rod does not move when demanded, or is stuck or dropped, the step counter will not reflect its true position. The bank demand position indication has a high accuracy, ±1 step, yet, because it is an inferred position indication, it must be continuously verified against DRPI indication.

There are 15 group step counters on the main control board (Figure 8). Each counter has three digits and will indicate the number of 5/8 inch steps demanded of that group. Each counter is driven by three solenoids, one for an "up" step, one for a "down" step, and one for "reset." The counter's up or down solenoid receives pulses from the data logging circuitry of the logic cabinet (Figure 11). These solenoid pulses drive the group step counters.

The data logging circuitry also sends bank demand signals to the plant computer and the P/A Converter which inputs the RIL Monitor. Figure 10 is the basic block diagram of the Bank Demand Position Indication System.

The group step counters are electrically reset to 000 when the "Rod Control Startup Pushbutton" (located on CB-07) is depressed. The group step counters may be reset to any number by manually manipulating the thumbwheels after the cover has been lifted. The Group Step Counter for a group will not count if there is an urgent failure in the associated power cabinet, however bank position will still change.

During reactor startup and shutdown, the operators are directed by procedure to monitor step counter and DRPI indication tracking together. When rods are fully inserted, the DRPI rod bottom lights are verified on when step counters reach approximately 2 steps. IPO-002A/B directs referencing and offsetting the control rods prior to a reactor startup. Rods are referenced by withdrawing one bank at a time to 232 steps on the step counters, and verifying the DRPI step 228 light on. The step counters and P/A converter must then be adjusted to 231 steps, the actual full-out rod position. The bank is then offset by inserting the control bank rods to Control Bank Offset (CBO) position, and shutdown bank rods to Full Out Position (FOP), as determined by Core Performance Engineering. The RCCA position in the plant computer must then be adjusted to the actual control bank position.

During a reactor trip the group step counters will remain at the indication prior to the trip since the pulses that change the indication would not occur during a trip situation. The group step counters must be manually reset prior to the next startup. This is done by the startup pushbutton on the MCB or by the individual thumbwheels on each group step counter. The startup pushbutton also resets the P/A converter. The plant computer resets to zero when a P-4 signal is seen (An Urgent failure occurs in all the power cabinets due to the trip breakers opening inhibiting the pulser/oscillator so that the slave cyclers do not run and no data logging will take place).

Examination Outline Cross-Reference	Level	RO	SRO
Rev. Date: 1/5/2015	Tier #	2	n/a
Change: 3	Group #	2	n/a
	K/A #	015 G2.2.36	n/a
Level of Difficulty: 4	Importance Rating	3.1	n/a

Nuclear Instrumentation - Ability to analyze the effect of maintenance activities, such as degraded power sources, on the status of limiting conditions for operations

Question 32

Unit 1 plant conditions:
0800

- Reactor startup is in progress
- Reactor power = 10^{-8} amps stable (critical)
- Intermediate Range Detector N-35 is declared INOPERABLE due to erratic operation of one-half decade swings

0820

- While investigating, maintenance inadvertently causes Intermediate Range Detector N-36 to fail low and they CANNOT return it to service

Based on the above plant conditions, complete the following statements:

1. At 0800, Technical Specifications _____ allow positive reactivity addition.

2. At 0820, Technical Specifications _____ require a reactor trip.

A. (1) will
(2) do

B. (1) will
(2) do NOT

C. (1) will NOT
(2) do

D. (1) will NOT
(2) do NOT

Answer: B

Question matches the KA by requiring knowledge of how removing NI(s) from service affects TS LCOs. All of the answers are < 1 hr TS requirements.

Explanation / Plausibility:

A. 1st part is correct. 1 failed IR does allow positive reactivity additions. 2nd part is incorrect because TS does not require a reactor trip if both IR are INOP. It is plausible because 2 SR detectors INOP < P6 does require a reactor trip.

B. 1st part is correct. 2nd part is correct.

C. 1st part is incorrect because TS does allow positive reactivity addition. It is plausible because if it were 1 SR INOP < P6, it would be correct. 2nd part is incorrect but plausible (see A).

D. 1st part is incorrect but plausible (see C). 2nd part is correct.

Technical Reference: (Attach if not previously provided including revision number)	Excore Instrumentation Study Guide Reactor Protection and ESFAS Study Guide TS 3.3.1

Proposed references to be provided to applicants during examination: _____

Learning Objective: **APPLY** the administrative requirements of the Excore Instrumentation system including Technical Specifications, TRM and ODCM. (LO21.SYS.EC1.OB06)

Question Source:	Bank #		
	Modified Bank#		
	New	X	
Question History:	Last NRC Exam		
Question Cognitive Level	Memory or Fundamental Knowledge		
	Comprehension or Analysis		X
10 CFR Part 55 Content:	55.41	41.10	
	55.43	n/a	

REACTOR PROTECTION AND ESFAS STUDY GUIDE

SOURCE RANGE REACTOR TRIP BLOCK PERMISSIVE, P-6

P-6 is generated from 1 out of 2 Intermediate Range channels > 10^{-10} amps. This allows us to intentionally block the Source Range Reactor trip during startup. In order to block this trip, two block switches must be placed in the "blocked" position which will also de-energize the Source Range Detectors. Train A of SSPS must be blocked for N-31 to de-energize and Train B of SSPS must be blocked to de-energize N-32.

On a shutdown when power is ~5 X 10^{-11} amps on 2 of 2 channels, **P-6** is automatically removed. The removal of **P-6** will automatically re-energize the Source Range as well as reinstate the SR trip and Flux Doubling Boron Dilution Protection.

Reactor Protection and ESFAS Study Guide

REACTOR TRIP SIGNALS

Source Range High Flux Trip

This trip functions to trip the reactor to protect against a startup accident (e.g., uncontrolled RCCA bank rod withdrawal) while in the source range. To trip, it requires >10^5 counts per second on 1 of 2 source range channels

RANGES INDICATION FOR THE EXCORE INSTRUMENTION SYSTEM (CONCEPT)

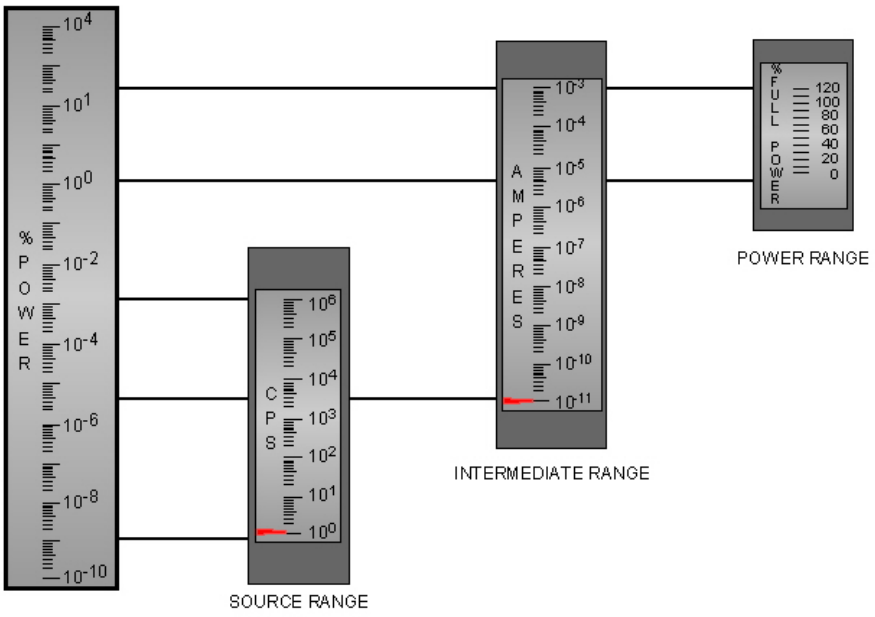

OP51.SYS.EC1.FG01 2-2-04

ACTIONS (continued)

CONDITION	REQUIRED ACTION	COMPLETION TIME
E. One channel inoperable.	----------NOTE---------- One channel may be bypassed for up to 12 hours for surveillance testing. ----------	
	E.1 Place channel in trip.	72 hours
	OR	
	E.2 Be in MODE 3.	78 hours
F. One Intermediate Range Neutron Flux channel inoperable.	F.1 Reduce THERMAL POWER to < P-6.	24 hours
	OR	
	F.2 Increase THERMAL POWER to > P-10.	24 hours
G. Two Intermediate Range Neutron Flux channels inoperable.	G.1 ----------NOTE---------- Limited boron concentration changes associated with RCS inventory control or limited plant temperature changes are allowed. ----------	
	Suspend operations involving positive reactivity additions.	Immediately
	AND	
	G.2 Reduce THERMAL POWER to < P-6.	2 hours

ACTIONS (continued)

CONDITION	REQUIRED ACTION	COMPLETION TIME
H. Not used.		
I. One Source Range Neutron Flux channel inoperable.	----------NOTE---------- Limited boron concentration changes associated with RCS inventory control or limited plant temperature changes are allowed. ---------- I.1 Suspend operations involving positive reactivity additions.	 Immediately
J. Two Source Range Neutron Flux channels inoperable.	J.1 Open reactor trip breakers (RTBs).	Immediately
K. One Source Range Neutron Flux channel inoperable.	K.1 Restore channel to OPERABLE status. <u>OR</u> K.2.1 Initiate action to fully insert all rods. <u>AND</u> K.2.2 Place the Rod Control System in a condition incapable of rod withdrawal.	48 hours 48 hours 49 hours
L. Not used.		

Table 3.3.1-1 (page 1 of 6)
Reactor Trip System Instrumentation

FUNCTION	APPLICABLE MODES OR OTHER SPECIFIED CONDITIONS	REQUIRED CHANNELS	CONDITIONS	SURVEILLANCE REQUIREMENTS	ALLOWABLE VALUE[a]
1. Manual Reactor Trip	1,2	2	B	SR 3.3.1.14	NA
	3[b], 4[b], 5[b]	2	C	SR 3.3.1.14	NA
2. Power Range Neutron Flux					
a. High	1,2	4	D	SR 3.3.1.1 SR 3.3.1.2 SR 3.3.1.7 SR 3.3.1.11 SR 3.3.1.16	≤ 109.6% RTP[q][r]
b. Low	1[c], 2	4	E	SR 3.3.1.1 SR 3.3.1.8 SR 3.3.1.11 SR 3.3.1.16	≤ 25.6% RTP[q][r]
3. Power Range Neutron Flux Rate High Positive Rate	1,2	4	E	SR 3.3.1.7 SR 3.3.1.11 SR 3.3.1.16	≤ 6.3% RTP with time constant ≥ 2 sec
4. Intermediate Range Neutron Flux	1[c], 2[d]	2	F,G	SR 3.3.1.1 SR 3.3.1.8 SR 3.3.1.11	≤ 31.5% RTP

(a) The Allowable Value defines the limiting safety system setting except for Trip Functions 2a, 2b, 6, 7, and 14 (the Nominal Trip Setpoint defines the limiting safety system setting for these Trip Functions). See the Bases for the Nominal Trip Setpoints.
(b) With Rod Control System capable of rod withdrawal or one or more rods not fully inserted.
(c) Below the P-10 (Power Range Neutron Flux) interlock.
(d) Above the P-6 (Intermediate Range Neutron Flux) interlock.
(q) If the as-found channel setpoint is conservative with respect to the Allowable Value but outside its predefined as-found acceptance criteria band, then the channel shall be evaluated to verify that it is functioning as required before returning the channel to service.
(r) The instrument channel setpoint shall be reset to a value that is within the as-left tolerance of the Nominal Trip Setpoint or a value that is more conservative than the Trip Setpoint; otherwise, the channel shall be declared inoperable. The Nominal Trip Setpoint, the methodology used to determine the as-found tolerance and the methodology used to determine the as-left tolerance shall be specified in the Technical Specification Bases.

Table 3.3.1-1 (page 2 of 6)
Reactor Trip System Instrumentation

FUNCTION	APPLICABLE MODES OR OTHER SPECIFIED CONDITIONS	REQUIRED CHANNELS	CONDITIONS	SURVEILLANCE REQUIREMENTS	ALLOWABLE VALUE[a]
5. Source Range Neutron Flux	2[e]	2	I,J	SR 3.3.1.1 SR 3.3.1.8 SR 3.3.1.11	≤ 1.4 E5 cps
	3[b], 4[b], 5[b]	2	J,K	SR 3.3.1.1 SR 3.3.1.7 SR 3.3.1.11	≤ 1.4 E5 cps
6. Overtemperature N-16	1,2	4	E	SR 3.3.1.1 SR 3.3.1.2 SR 3.3.1.3 SR 3.3.1.6 SR 3.3.1.7 SR 3.3.1.10 SR 3.3.1.16	Refer to Note 1[q][r]
7. Overpower N-16	1,2	4	E	SR 3.3.1.1 SR 3.3.1.2 SR 3.3.1.7 SR 3.3.1.10 SR 3.3.1.16	≤ 112.8% RTP [q][r]
8. Pressurizer Pressure					
a. Low	1[g]	4	M	SR 3.3.1.1 SR 3.3.1.7 SR 3.3.1.10 SR 3.3.1.16	≥ 1863.6 psig (Unit 1) ≥ 1865.2 psig (Unit 2)
b. High	1,2	4	E	SR 3.3.1.1 SR 3.3.1.7 SR 3.3.1.10 SR 3.3.1.16	≤ 2400.8 psig (Unit 1) ≤ 2401.4 psig (Unit 2)

(a) The Allowable Value defines the limiting safety system setting except for Trip Functions 2a, 2b, 6, 7, and 14 (the Nominal Trip Setpoint defines the limiting safety system setting for these Trip Functions). See the Bases for the Nominal Trip Setpoints.
(b) With Rod Control System capable of rod withdrawal or one or more rods not fully inserted.
(e) Below the P-6 (Intermediate Range Neutron Flux) interlock.
(g) Above the P-7 (Low Power Reactor Trips Block) interlock.
(q) If the as-found channel setpoint is conservative with respect to the Allowable Value but outside its predefined as-found acceptance criteria band, then the channel shall be evaluated to verify that it is functioning as required before returning the channel to service.
(r) The instrument channel setpoint shall be reset to a value that is within the as-left tolerance of the Nominal Trip Setpoint or a value that is more conservative than the Trip Setpoint; otherwise, the channel shall be declared inoperable. The Nominal Trip Setpoint, the methodology used to determine the as-found tolerance and the methodology used to determine the as-left tolerance shall be specified in the Technical Specification Bases.

Examination Outline Cross-Reference	Level	RO	SRO
Rev. Date: 12/1	Tier #	2	n/a
Change: 1	Group #	2	n/a
	K/A #	002 K1.02	n/a
Level of Difficulty: 3	Importance Rating	3.6	n/a

Reactor Coolant: Knowledge of the physical connections and/or cause/effect relationships between the RCS and the following systems: CRDS

Question 33

Given the following conditions;

- Unit 1 is stable at 100% power
- Loop 2 cold leg narrow range temperature instrument RTD fails due to an open circuit

Assuming NO operator actions, which of the following describes the plant response due to the failure?

A. Loop 2 Tcold indicates low and Loop 2 Tavg indicates low, causing rods to move OUT.

B. Loop 2 Tcold indicates high and Loop 2 Tavg indicates high, causing rods to move IN.

C. Loop 2 Tcold indicates low and Loop 2 Tavg indicates low, causing rods to move IN.

D. Loop 2 Tcold indicates high and Loop 2 Tavg indicates high, causing rods to move OUT.

Answer: B

This question matches the KA by requiring knowledge of how a RCS cold leg temperature instrument failure affects rod control.

Explanation / Plausibility:

A. 1st part is incorrect because an open RTD creates infinite resistance which leads to the Tcold channel failing high not low. 2nd part is incorrect but plausible because if the temperature failed low rods would withdraw.

B. 1st part is correct because an open RTD creates infinite resistance which causes the instrument to fail high. 2nd part is correct because when a Tave channel fails high average Tave increases causing rapid control rod insertion.

C. 1st part is incorrect because an open RTD creates infinite resistance which leads to the Tcold channel failing high not low. 2nd part is correct because on open RTD would lead to rapid rod insertion.

D. 1st part is correct because an open RTD creates infinite resistance which causes the instrument to fail high. 2nd part is incorrect but plausible because if the temperature failed low rods would withdraw.

Technical Reference: (Attach if not previously provided including revision number)	RCS Study Guide N-16 Power/Flow/RCS Temperature System Study Guide

Proposed references to be provided to applicants during examination: _____

Learning Objective: EXPLAIN the instrumentation and controls of the N-16 Power/Flow/RCS Temperature System and PREDICT the system response.

Question Source:	Bank #	ILOT5077	
	Modified Bank#		
	New		
Question History:	Last NRC Exam		
Question Cognitive Level	Memory or Fundamental Knowledge		
	Comprehension or Analysis		X
10 CFR Part 55 Content:	55.41	41.7	
	55.43	n/a	

Narrow Range Cold Leg Temperature

Two fast-response resistance temperature detectors (RTDs) in thermowells are located in each cold leg, one of which provides control board indication for narrow range cold leg temperature. Indication for each loop is on main control board CB07 and has a range of 510-630°F. Reactor control and protection systems also use these temperature channels. Narrow range cold leg temperature and loop differential temperature, computed from the N-16 detectors on each hot leg, are used to determine Tavg.

Average Reactor Coolant Temperature

The N-16 Power Measuring System calculates average reactor coolant temperature (Tavg) for each RCS loop. Its value is determined by loop N-16 power and narrow range cold leg temperature. Tavg indication for each loop is at CB07 with an indicating range of 530-630°F. An electronically averaged signal (average Tavg), generated from the average of all loop average temperature inputs, provides the Tavg signal for automatic control of pressurizer level, steam dumps and control rod movement.

FAST RESPONSE COLD LEG NARROW RANGE TEMPERATURE

Two fast response RTDs installed in thin-wall thermowells are provided in each cold leg (**See Figure 2**). The RTDs have a faster time response than the wide range primarily due to the close tolerance fit within the thermowell. An almost metal-to-metal fit on the sides and on the bottom of the RTD reduces the dead space of air, thus allowing a quicker response (response time is 3-6 seconds). Another factor in the response time is the silver coating on the RTD. The silver coating has a high heat transfer coefficient, which speeds the RTDs response to temperature change. These detectors are virtually unaffected by changes in containment ambient temperature since they are in thermowells surrounded by the RCS fluid.

The cold legs have a narrow range indication for each loop in the Control Room on CB-07, with a range of 510 - 630°F. One RTD is used for control (TE-411B, TE-421B, TE-431B and TE-441B) and one is wired as a spare (TE-410B, TE-420B, TE-430B and TE-440B). These RTDs provide temperature signals for reactor control and input to OP-N16 and OTN-16 trip setpoint calculations. Note that these cold leg temperature indications plus the delta T signal computed from the N-16 detectors on each hot leg are used to compute T_{ave}.

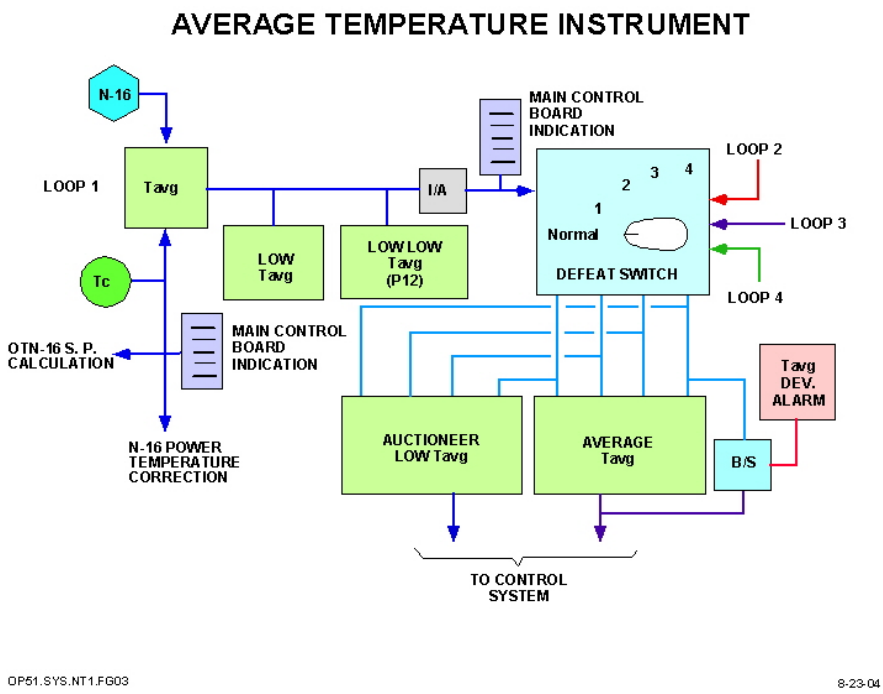

The output from the averaging circuit is used in five control circuits (**Figure 4**). In the rod control system, Average T_{ave} is compared with T_{ref} (a signal proportional to turbine load) to develop the rod speed-direction signal. In the steam dump control system, Average T_{ave} is compared with T_{ref} to generate a deviation signal that, with other interlocks, controls the opening of the steam dumps. In the pressurizer level control system, the pressurizer program level setpoint varies as a function of average coolant temperature. An output to a reactivity computer allows the calculation of temperature reactivity coefficients. An output is also provided for use in the rod insertion monitor system (This is a system capability, but is normally not used, setpoint of zero).

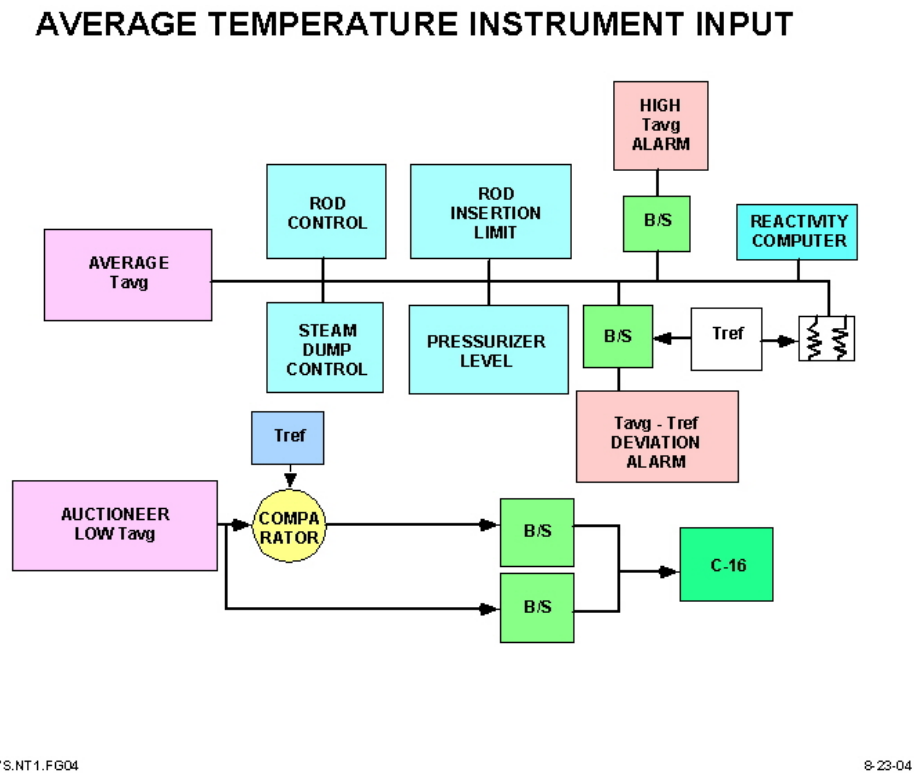

POWER OPERATION

The rod control system is programmed to automatically raise the average temperature as power is increased. The coolant average temperature program varies the average temperature of the reactor coolant from 557°F at no-load to 585.4 (589.2)°F at full power. Rod control compares the average loop T_{ave} with a reference temperature (based on turbine load) and will adjust rod position accordingly if rod control is in automatic.

ABNORMAL

TC/N-16 INSTRUMENT MALFUNCTION (ABN-704)

T_{ave} Failure High - if N-16 or T_{cold} failed high, it would cause that loop T_{ave} to fail high and increase the Average T_{ave}. The following automatic actions may occur:

- Rapid control insertion due to T_{ave} - T_{ref} mismatch (if rods in AUTO)
- Steam dumps will open if armed with C-7. (loss of load)
- Pressurizer reference levels increase (to a max of 60%) with charging flow increase when in auto

If T_{ave} fails high, then the operator will need to place control rods in manual and restore T_{ave} to within 1°F of T_{ref}. If dumps actuated, then the operator should switch the system interlock selector switches to OFF.

T_{ave} Failure Low - any failure that results in a decreased loop T_{ave} will cause that T_{ave} to be the low auctioneered T_{ave}. This may cause a "Stop Turbine Loading" (C-16) to be actuated (low auctioneered T_{ave} less than 553°F or T_{ref} - T_{ave} greater than 20°F). In addition, the Average Tave

will decrease, causing Rod Control to withdraw rods if in Auto. If automatic rod motion occurs, the operator should place rod control in Manual.

Examination Outline Cross-Reference	Level	RO	SRO
Rev. Date: 1/15/2015	Tier #	2	n/a
Change: 3	Group #	2	n/a
	K/A #	027 A4.01	n/a
Level of Difficulty: 2	Importance Rating	3.3	n/a

Containment Iodine Removal: Ability to manually operate and/or monitor in the control room: CIRS controls.

Question 34

Complete the following statements regarding the Containment Preaccess Filtration Trains:

1. The Containment Preaccess Filtration Trains are started from 1-CB-03 ONLY during ____(1)____ conditions to remove airborne reactivity from the containment.

2. If the Filtration Trains are operating and the Thermistor strips on the filtration units' charcoal adsorbers increase to 300°F, the units deluge system____(2)____have initiated.

   A. (1) accident (LOCA)
      (2) will

   B. (1) accident (LOCA)
      (2) will NOT

   C. (1) non-accident
      (2) will

   D. (1) non-accident
      (2) will NOT

Answer: C

The question matches the KA by requiring knowledge of automatic operation of the Filter Trains when temperatures increase.

Explanation / Plausibility:

A. 1st part is incorrect because the system load sheds during an SI or blackout condition. It is plausible because it will remove Iodine from the containment atmosphere. 2nd part is correct because the Unit Deluge system initiates at 300°F. It is plausible because there is a high alarm at 254°F.

B. 1st part is incorrect but plausible (see A). 2nd part is incorrect.

C. 1st part is correct. This system is not used during accident conditions. It is generally used to remove airborne radioactivity prior to containment access. 2nd part is correct (see A).

D. 1st part is correct. 2nd part is incorrect.

Technical Reference: (Attach if not previously provided including revision number)	Containment Ventilation Study Guide LO21.SYS.CL1

Proposed references to be provided to applicants during examination: _____

Learning Objective: DESCRIBE the components of the Containment Ventilation system including interrelations with other systems to include interlocks and control loops. (LO21.SYS.CL1.OB01)

Question Source:	Bank #		
	Modified Bank#		
	New	X	
Question History:	Last NRC Exam		
Question Cognitive Level	Memory or Fundamental Knowledge		X
	Comprehension or Analysis		
10 CFR Part 55 Content:	55.41	41.7	
	55.43	n/a	

Containemnt Ventilation System Study Guide

Containment Preaccess Filtration System

The Containment Preaccess Filtration System Fans are controlled by handswitches on u-CB-03. The power supplies for these fans are load shed by Blackout and Safety Injection. When the Preaccess Filtration Fan handswitch is taken to "Start," the associated filtration unit's air operated inlet and outlet dampers open. These dampers close when the fan is stopped.

Differential pressure instruments provide local indication fan ΔP, filtration unit ΔP, pre-filter ΔP, HEPA ΔP, and charcoal adsorber ΔP. Alarms on u-ALB-3A annunciate for a low ΔP across each fan at ≤ 2" water after 30 seconds from fan start, and a high ΔP across each filtration unit at ≥ 8" water.

Thermistor strips monitor the temperature of the filtration units' charcoal adsorbers. The HI setpoint of 254°F actuates alarms on the local fire detection control panel and the main fire detection control panel in the Control Room. The HI-HI setpoint of 300°F actuates another alarm on the local and main fire detection control panels, and also opens the fire protection water deluge valve for the affected filtration unit, spraying water on the charcoal adsorbent.

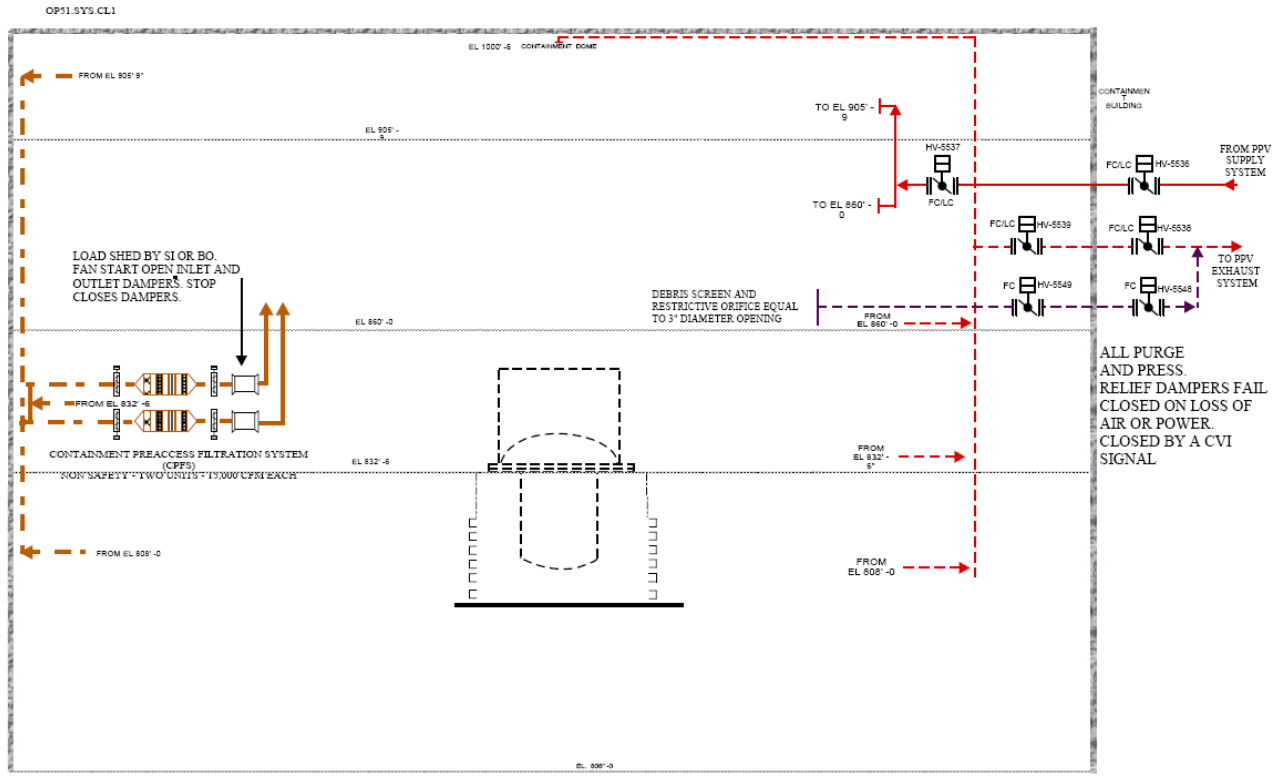

CNTMT PURGE, PREACCESS FILTRATION AND PRESSURE RELIEF
FIGURE 6

SYSTEM OPERATION

SOP-801A/B, “Containment Ventilation System,” governs the normal operation of the Containment Air Cooling and Recirculation System, Neutron Detector Well Cooling System, Control Rod Drive Mechanism Ventilation System, Reactor Coolant Pipe Penetration Cooling System, Containment Preaccess Filtration System, Containment Purge System and Containment Pressure Relief System. The Hydrogen Purge System is operated according to SOP-205, “Hydrogen Purge Supply and Exhaust System.”

The Containment Air Cooling and Recirculation System, Neutron Detector Well Cooling System, Control Rod Drive Mechanism Ventilation System and the Reactor Coolant Pipe Penetration Cooling System are required to operate during normal plant operation. These systems continuously circulate air through the areas they serve to maintain a suitable environment for equipment.

Three of the Containment Air Cooling and Recirculation Fans are normally in service. If the average Containment temperature can not be maintained at approximately 100°F, the fourth unit will be started. A Safety Injection signal will trip all the running fans and the breakers can not be reset until the Safety Injection signal is reset. The Phase A Isolation signal will isolate the Ventilation Chilled Water and instrument air to Containment. Isolating the instrument air will cause the air operated dampers to fail open. The blackout sequencer will start the fans when power is restored to the bus.

One of the Neutron Detector Well Cooling Systems will be in service during normal operations. The standby system may be started if detector well exhaust temperatures cannot be maintained below 150°F. When the fan is started, the associated ventilation chilled water isolation valve

opens. A safety injection signal will trip the fans. The blackout sequencer will start the fans when power is restored to the bus.

Any time the Control Rod Drive Mechanisms are energized or the Reactor Coolant System is above 350°F, one of the Control Rod Drive Mechanism Ventilation Fans will be in service. A safety injection signal will trip the breaker like the Containment Air Cooling and Recirculation Fans. The blackout sequencer will restart the fan when power is restored to the bus.

During normal operation, one of the two Reactor Coolant Pipe Penetration Fans in each subsystem is operating. The power supplies for these fans are load shed during Blackout and Safety Injection.

The Containment Preaccess Filtration System is not required to be in service for normal operations. If a Containment entry is planned, the fans may be started to reduce the airborne radioactivity levels. The system is not required following a Safety Injection or Blackout and is load shed by either of these signals.

Examination Outline Cross-Reference	Level	RO	SRO
Rev. Date: 1/5/2015	Tier #	2	n/a
Change: 2	Group #	2	n/a
	K/A #	033 K4.04	n/a
Level of Difficulty: 2	Importance Rating	2.7	n/a

Spent Fuel Pool Cooling: Knowledge of design feature(s) and/or interlock(s) which provide for the following: Maintenance of spent fuel pool radiation.

Question 35

Which ONE of the following statements is correct with regards to the design of the Spent Fuel Pool (SFP) Cooling system?

A. The SFP system return line terminates 6 feet above the spent fuel but has a siphon break at 1 ft below normal to prevent draining the pool in the event of a line break.

B. The SFP system return line terminates 19 feet above the spent fuel but has a siphon break at 1 ft below normal to prevent draining the pool in the event of a line break.

C. The SFP system return line terminates 6 feet above the spent fuel but has a siphon break at 2 ft below normal to prevent draining the pool in the event of a line break.

D. The SFP system return line terminates 19 feet above the spent fuel but has a siphon break at 2 ft below normal to prevent draining the pool in the event of a line break.

Answer: A

This question meets the KA because it requires knowledge of a design feature in the SFP that ensures water remains over the spent fuel, thereby maintaining radiation levels low.
Explanation / Plausibility:

A. Correct. The SFP system return line terminates in the SFP 6 ft above the fuel assemblies and the siphon break is located 1 ft below the normal pool level (23 Ft).

B. Incorrect because the return line terminates 6 ft above the spent fuel pool. It is plausible because 19 ft is where the suction line terminates.

C. Incorrect because the siphon break is located 1 ft below normal level which would be 22 ft. It is plausible because ~2 ft below normal is where the SFP pumps trip.

D. Incorrect because the siphon break is at 22 ft (1 ft below normal). It is plausible because 23 ft is the normal SFP level and ~2 ft below normal is where the SFP pumps trip.

Technical Reference: (Attach if not previously provided including revision number)	Spent Fuel Pool Cooling & Cleanup Study Guide

Proposed references to be provided to applicants during examination: _____

Learning Objective: DESCRIBE the basic design and flowpath of the Spent Fuel Pool Cooling and Cleanup system. (LO21.SYS.SF1.OB02)

Question Source:	Bank #	
	Modified Bank#	
	New	X
Question History:	Last NRC Exam	
Question Cognitive Level	Memory or Fundamental Knowledge	X
	Comprehension or Analysis	
10 CFR Part 55 Content:	55.41	41.7
	55.43	n/a

Spent Fuel Pool Cooling & Cleanup Study Guide

ABNORMAL

SPENT FUEL POOL AND REFUELING CAVITY WATER LEVELS

Tech Specs 3.7.15 requires that at least 23 feet of water be maintained over the top of irradiated fuel assemblies seated in the storage racks. This is to ensure removal of 99% of the assumed 10% iodine gap activity released from the rupture of an irradiated fuel assembly.

To protect against loss of water from the Spent Fuel Pool, the Spent Fuel Pool Cooling Pump suction lines penetrate the pool wall and terminate approximately four feet below the normal water level and the return lines terminate six feet above the fuel assemblies. The return lines contain anti-siphon holes at the 857'6" elevation (approximately one foot below the normal level). The anti-siphon holes prevent gravity draining of the pool and ensure sufficient shielding is maintained. There are no drain lines connected to the pool.

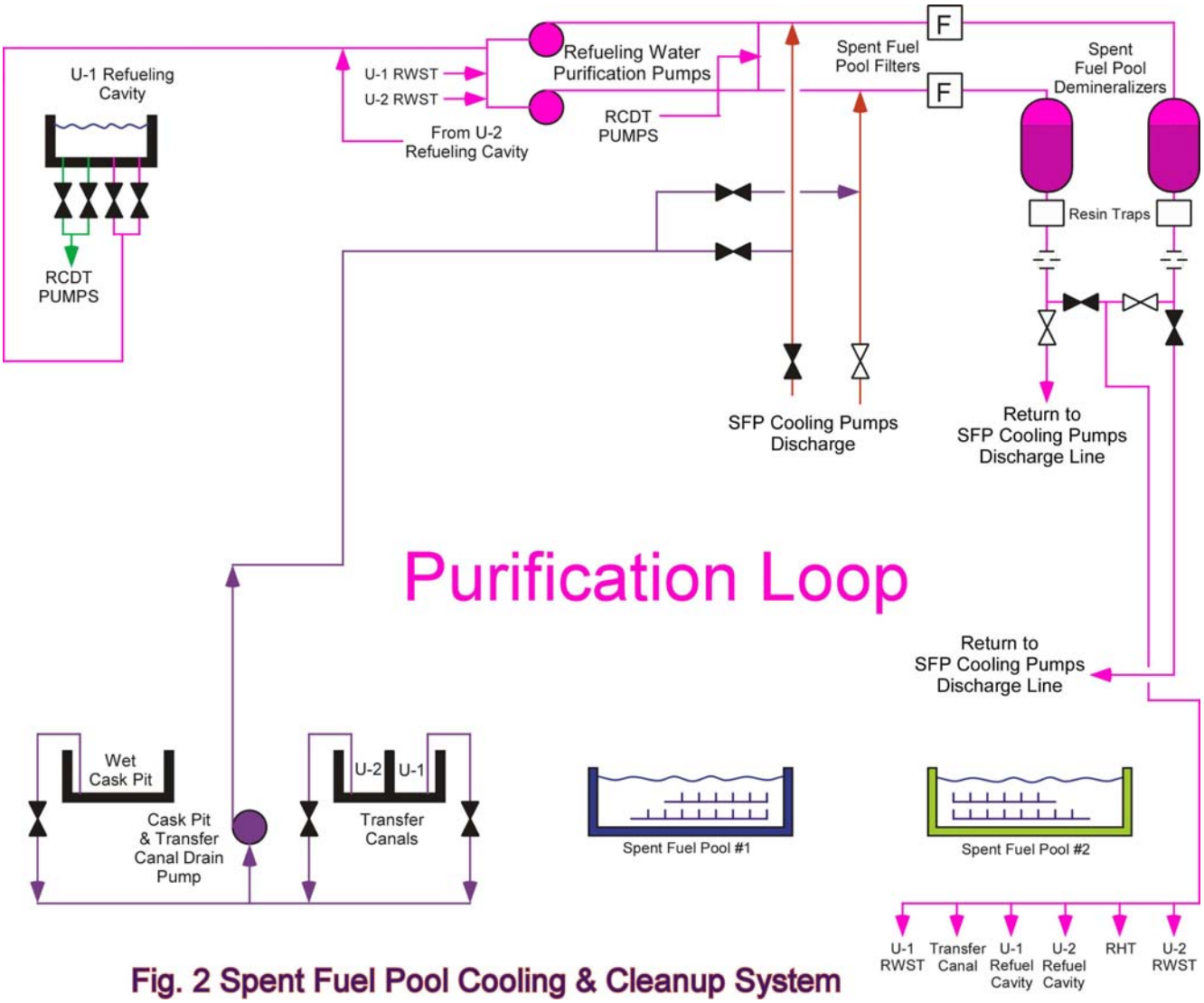

Fig. 2 Spent Fuel Pool Cooling & Cleanup System

Spent Fuel Pool System Big Book
Figure 8

SFP Pumps Trip on the following:
Blackout in either unit (OL) OR
SI in in either unit (OL) OR
Lo-Lo Level 2/2 OR
Level Instrument Failure Hi (2/2) OR
Combination of Instrument failure and Lo-Lo Level (resulting in 2/2)

Must be manually restarted

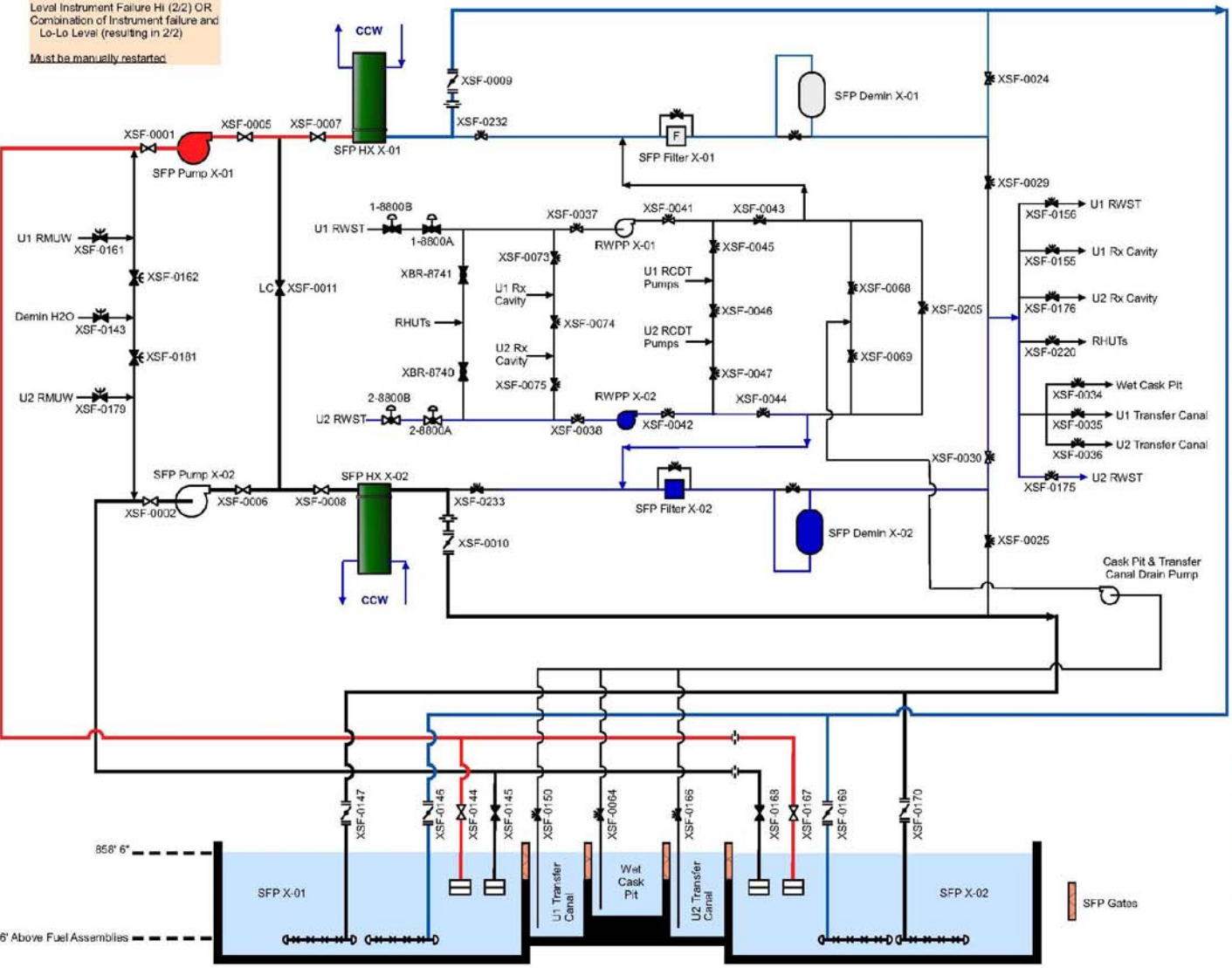

NOTES:

1. There are a total of 5 gates associated with the Spent Fuel Pools. One between each SFP and its associated transfer canal. One gate connecting the Wet Cask Pit to the Transfer canals. One gate for each transfer canal, separating the units.
2. Each demineralizer train can only be aligned to one supply/return at a time to prevent inadvertently transferring water between sources. Max flow thru a demin train is 250 gpm
3. Boron concentration is normally maintained 2400-2600 ppm. TS limit is ≥ 2000 ppm.
4. Normal makeup to the SFPs is from the RMUW System since the majority of losses is from evaporation.
5. XSF-0169 and XSF-0170, SFP Pumps X-01/X-02 return to SFP X-02 are normally throttled to equalize levels between SFPs when a single pump is aligned to both pools. This is done because of the longer piping run to/from SFP X-01 causing higher pressure losses in turn causing the X-02 pool to control at a higher level.
6. Normal full power alignment is one pump cooling both pools with its associated purification train is service. The other purification train is in **service purifying either unit's** RWST.
7. Normal outage alignment is 1 train cooling both pools while the other train is aligned to cool the SFP associated with the unit being refueled.
8. To maintain system configuration, a system status operator aid is maintained on the unit 1 control board.
9. Orifice installed upstream of XSF-0009 and XSF-0010 provide the D/P necessary to direct flow through the SFP Filter and Demineralizer.
10. Maximum flow through a purification loop is 250 gpm.
11. Maximum flow through a SFP Pump is 4,000 gpm.
12. Technical Specifications require a minimum of 23' of water above the irradiated fuel.
13. X-01 pump is powered from XEB3-2, X-02 pump is powered from XEB4-2
14. SFP Level Info
    - 859' - Hi Level Alarm
    - 858' 6" +6" or -6" - normal Level
    - 858' Lo Level Alarm
    - 857' 6" - Return Lines Anti-Syphon Holes
    - 857' 4" - ~ 23' above top of fuel
    - 856' 4" - Lo-Lo Level Pump Trip (2 of 2)
    - 854' - Level of Pump Suction Screens

Tech Specs

3.7.15 Fuel Storage Area Water Level
The fuel storage area water level shall be ≥ 23 ft over the top of the storage racks

3.7.16 Fuel Storage Pool Boron Concentration
The fuel storage pool boron concentration shall be > 2000 ppm

3.7.17 Spent Fuel Assembly Storage
The combination of initial enrichment, burnup and decay time of each spent fuel assembly stored in Region II racks shall be within either (1) the **"acceptable" domain of Figure 3.7.17-1 in a 4 out of 4 configuration, (2) the "acceptable" domain of Figure 3.7.17-2 in a 3 out of 4 configuration, (3) the "acceptable" domain of Figure 3.7.17-3 in a 2 out of 4** configuration, or (4) shall be stored in a 1 out of 4 configuration. The acceptable storage configurations are shown in Figure 3.7.17-4.

3.9.1 Boron Concentration
Boron concentrations of all filled portions of the Reactor Coolant System, the refueling canal, and the refueling cavity, that have direct access to the reactor vessel, shall be maintained within the limit specified in the COLR.

3.9.7 Refueling Cavity Water Level
Refueling cavity water level shall be maintained ≥ 23 ft above the top of reactor vessel flange.

TR 13.9.34 Refueling - Crane Travel - Spent Fuel Storage Areas
Loads in excess of 2150 pounds shall be prohibited from travel over fuel assemblies in a storage pool.

TR 13.9.35 Water Level, Reactor Vessel, Control Rods
At least 23 feet of water shall be maintained over the top of the irradiated fuel assemblies within the reactor vessel

TR 13.9.36 Fuel Storage Area Water Level
The fuel storage area water level shall be ≥ 23 ft over the top of irradiated fuel assemblies seated in the storage racks.

NOTE: Placing a SFP Pump in local control causes the BO Sequencer to be inoperable because the SI and BO Operator Lockouts are bypassed which results in the EDG to be inoperable per TS LCO 3.8.1.F

Examination Outline Cross-Reference	Level	RO	SRO
Rev. Date: 11/3	Tier #	2	n/a
Change: 0	Group #	2	n/a
	K/A #	071 A1.06	n/a
Level of Difficulty: 2	Importance Rating	2.5	n/a

This K/A has been replaced with 035 A1.02.

Waste Gas Disposal: Ability to predict and/or monitor changes in parameters (to prevent exceeding design limits) associated with Waste Gas Disposal System operating the controls including: Ventilation system

Question 36

Given the following conditions:

- Waste Gas System Decay Tank #1 release is in progress.
- The following alarms are received simultaneously:
  - PC-11 HIGH alarm for X-RE-5701 AUX BLDG VENT DUCT (ABV089).
  - 1-ALB-6B, Window 3.7 – GWPS PNL TRBL.
- The Radwaste Operator reports the following alarm on the Gaseous Waste Panel:
  - ALM-0401, Window 1.8 – AUX BLDG VENT EXHAUST MONITOR HIGH RAD.

Which of the following is the most likely cause and what action is required?

A. Release permit setpoints for Waste Gas System Decay Tank #1 have been exceeded; ensure X-HCV-0014, Waste Gas Discharge Control Valve is closed.

B. The in-service Waste Gas Decay Tank Relief Valve is lifting; isolate the in-service Waste Gas Decay Tank.

C. The in-service Waste Gas Decay Tank Relief Valve is lifting; ensure Control Room HVAC Emergency Recirculation Initiation has occurred.

D. Release permit setpoints for Waste Gas System Decay Tank #1 have been exceeded; isolate Waste Gas System Decay Tank #1.

Answer: A

This question matches the KA by requiring knowledge of how parameters in the Waste Gas Disposal System alert the operator to pressure approaching system limits.

Explanation / Plausibility:

A. Correct. Given the conditions listed, these are the correct actions.

B. Incorrect. Plausible because the Waste Gas Decay Tank Relief Valve could be lifting, however, this discharge is directed to the Waste Gas Holdup Tank and annunciator ALM 0401-1.8 would not be an alarm.

C. Incorrect. Plausible because the procedure entry is correct and the Waste Gas Decay Tank Relief Valve could be lifting, however, this action would not be required for the conditions listed.

D. Incorrect. Plausible because release setpoints have been exceeded, however, ABN entry is required prior to performing actions to isolate the Waste Gas System Decay Tank.

Technical Reference: (Attach if not previously provided including revision number)	Gaseous Waste Process Study Guide
Proposed references to be provided to applicants during examination:	
Learning Objective:	**IDENTIFY** the Main Control Board/Plant Computer controls, alarms and indications associated with the Gaseous Waste Processing System. (OP51.SYS.GH1.OB04)

Question Source:	Bank #	327	
	Modified Bank#		
	New		
Question History:	Last NRC Exam		
Question Cognitive Level	Memory or Fundamental Knowledge		X
	Comprehension or Analysis		
10 CFR Part 55 Content:	55.41	41.5	
	55.43	n/a	

GASEOUS WASTE PROCESS STUDY GUIDE

MODE A OPERATION

(Figure 2) Flow enters the Catalytic Hydrogen Recombiner where hydrogen combines with oxygen to form steam. This steam vapor is condensed and the moisture is removed from the gaseous stream. Flow is routed to one of the Gas Decay Tanks (GDTs). The gaseous flow passes through the GDT and is routed back to the Gas Collection Header. At the Gas Collection Header, gas from the GDT mixes with incoming gas and enters the suction of the Waste Gas Compressor. This mode of operation is used when the pressure in the GDTs is between 5 and 20 psig.

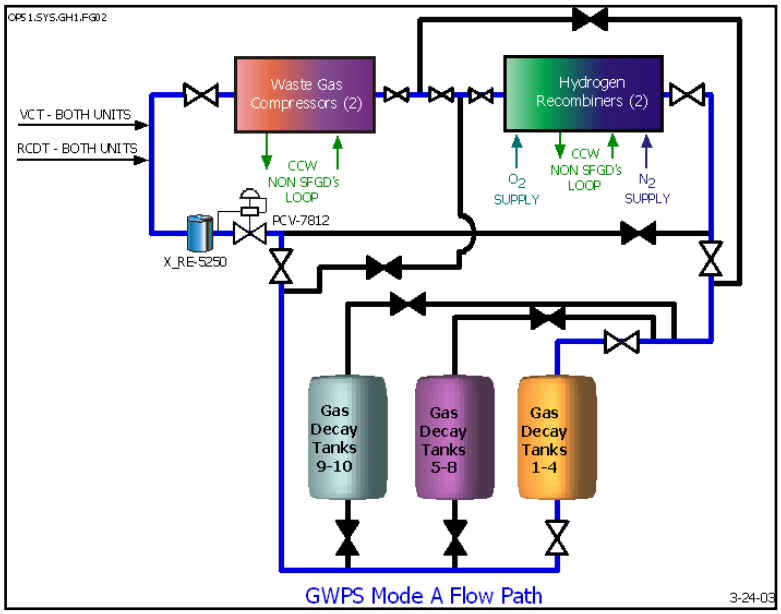

MODE B OPERATION

(Figure 3) Flow is routed to the on line GDT. Gaseous flow passes through the GDT and travels to the inlet of the Catalytic Hydrogen Recombiner. Hydrogen combines with oxygen to form steam. This steam vapor is condensed and the moisture is removed from the gaseous stream. Flow is routed from the Catalytic Hydrogen Recombiner to the Gas Collection Header and the suction of the Waste Gas Compressor. This mode of operation is used when the pressure in the GDTs is 35 psig or greater.

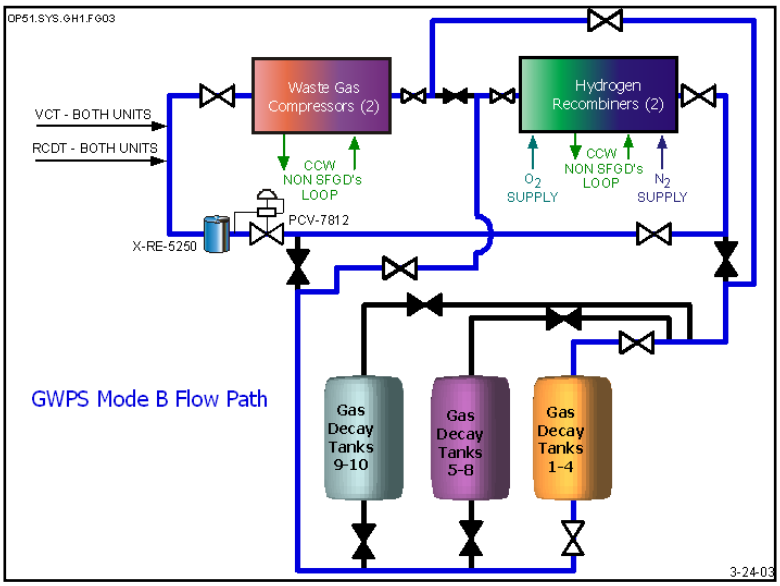

GASEOUS WASTE PANEL ALARMS

Gas Decay Tank and Shutdown Gas Decay Tank High Pressure

An annunciator window is provided for each Gas Decay Tank. The Gas Decay Tank annunciator alarms when tank pressure has reached 20 psig in Mode A operation and 100 psig in Mode B operation. The Shutdown Gas Decay Tank annunciators alarm when pressure reaches 16 psig in Mode A and 80 psig in Mode B. The alarm for the Gas Decay Tank informs the Radwaste Operator of the need to swap the tank in service. The alarm for the Shutdown Gas Decay Tanks informs the Radwaste Operator of the need for more frequent tank pressure monitoring in order to prevent exceeding the 20 psig limit (Mode A operation) or the need to isolate the tank (Mode B operation). In order for the annunciator to alarm either at its low alarm or high alarm, the Radwaste Operator has to position a switch on the back of the Gaseous Waste Processing Panel. Each tank's pressure indicator is provided with one of these switches. The positions are labeled either "MODE A" or "MODE B".

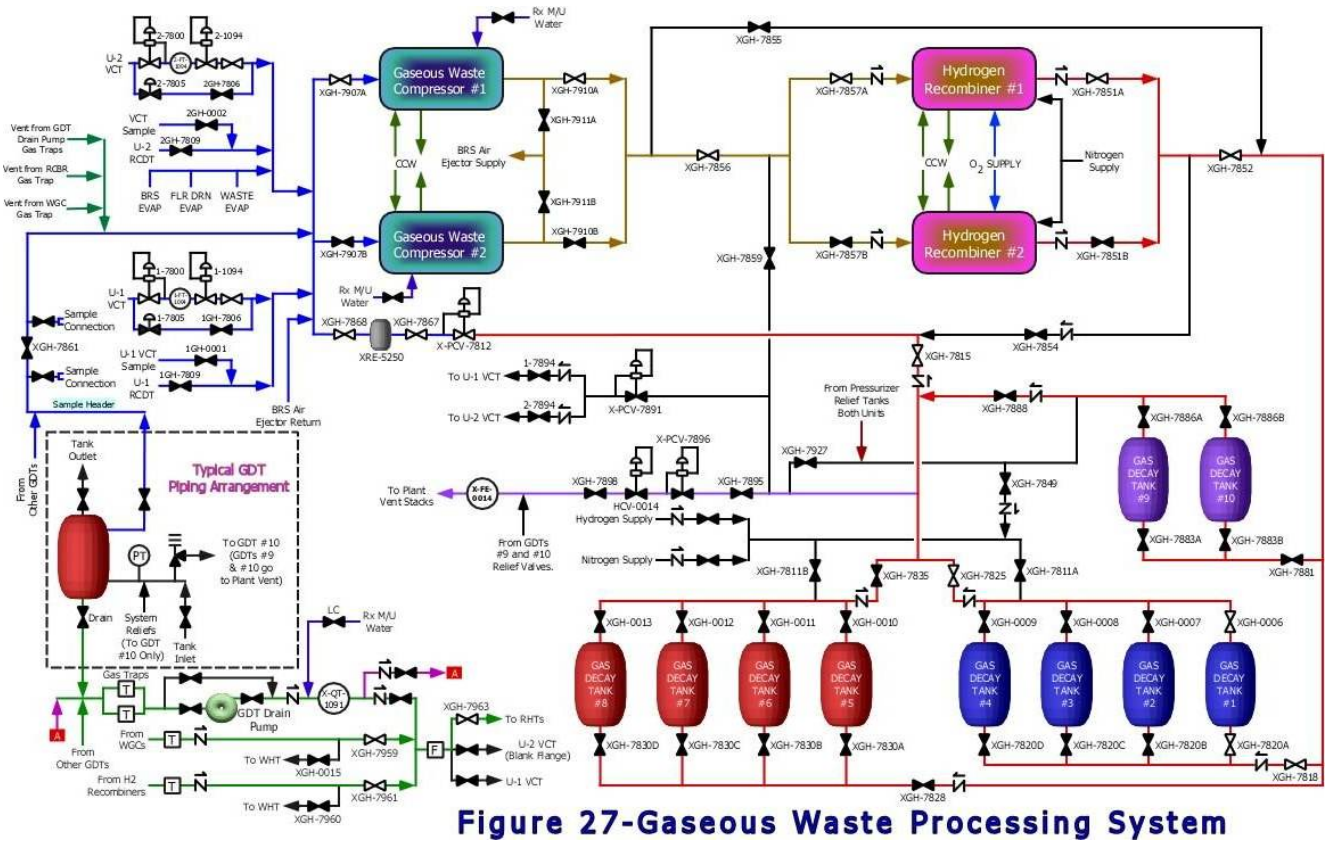

Figure 27-Gaseous Waste Processing System

GASEOUS WASTE PANEL

Gas Decay Tank 1 - 8 Pressure High	> 20 (A) or > 100 (B)
Gas Decay Tank 9 or 10 Pressure High	> 16 (A) or > 80 (B)
Oxygen Supply Header Low Pressure	< 40 psig
Hydrogen Supply Header Low Pressure	< 53 psig
Nitrogen Supply Header Low Pressure	< 53 psig
Waste Gas Compressor High Temperature	Seal water > 130°F
Waste Gas Compressor Low Suction Pressure	< -0.5 psig
Waste Gas Compressor Moisture Separator High	> 56%
Waste Gas Compressor Moisture Separator Low	< 4%
Waste Gas Compressor Moisture Separator High	> 100 psig

Examination Outline Cross-Reference	Level	RO	SRO
Rev. Date: 1/6/2015	Tier #	2	n/a
Change: 1	Group #	2	n/a
	K/A #	045 A3.11	n/a
Level of Difficulty: 3	Importance Rating	2.6*	n/a

Main Turbine Generator (MT/G) System: Ability to monitor automatic operation of the MT/G system, including: Generator Trip.

Question 37

Unit 1 initial conditions;

- Reactor power = 40%
- The main turbine trips on low oil pressure

Based on the above plant conditions, which ONE of the following states how the Main Generator and the reactor will respond?

A. The reactor will NOT trip and the Generator output breakers will trip 30 seconds later.

B. The reactor WILL trip and the Generator output breakers will trip 30 seconds later.

C. The reactor will NOT trip and the Generator output breakers will trip immediately.

D. The reactor WILL trip and the Generator output breakers will trip immediately.

Answer: A

This question matches the KA by requiring knowledge of how the main generator and reactor will automatically respond to a trip signal.

Explanation / Plausibility:

A. Correct. With reactor power < 50%, the reactor will not receive a trip signal. There is a 30 second time delay coupled with a reverse power relay before the generator output breakers open.

B. Incorrect because the reactor will not trip. It is plausible because if power were > 50%, it would be correct.

C. Incorrect because the generator output breakers will not open immediately. It is plausible because some generator lockouts will open the breakers immediately and trip the turbine.

D. Incorrect but plausible (see B & C).

Technical Reference: (Attach if not previously provided including revision number)	Main Generator Study Guide

Proposed references to be provided to applicants during examination: _____

Learning Objective: EXPLAIN the normal, abnormal and emergency operation of Main Generator. (LO21.SYS.MG1.OB26)

Question Source:	Bank #	
	Modified Bank#	
	New	X
Question History:	Last NRC Exam	
Question Cognitive Level	Memory or Fundamental Knowledge	
	Comprehension or Analysis	X
10 CFR Part 55 Content:	55.41	41.7
	55.43	n/a

Primary Water Level

Liquid levels in the primary water system monitored are:

- Primary water head tank
- Leakage water standpipe
- NaOH tank

The water level in the primary water head tank is sensed by capacitive detectors. Changing tank level changes the capacitance of the detector. Two detectors are used. One detector is used to signal high level by alarming at a preset high level limit on the GAC. The other is used to signal a low level in the tank by alarming at a preset low level limit on the GAC. Both are used to signal if level continues to fall. At 78% level a turbine-generator trip will occur. A "PW HT LVL" alarm is activated in the control room on high or low tank level. A "PW TRIP" alarm is activated in the control room when the low level trip occurs.

The setpoints for the primary water tank level alarms, trip, and operating band were revised to provide proper protection for the primary water pump and the generator, and provide an optimum operating band. The Primary Water Head Tank level should remain above 80% to prevent vortexing in the head tank which may cause turbine trip. The following tank level setpoints prevent high water level from entering the hydrogen gas piping, and trip the generator before loss of coolant allows the generator to overheat.

The primary water tank level alarms are set at:

- High level - 97%
- Low level - 85%

The primary water tank level trip is set at:

- Low level trip - 78%

Generator Protection

A generator trip will be initiated for a large variety of problems to protect either the generator or the turbine from damage. The term "generator trip" does not refer to just one action. Different events cause different types of trips.

The most common type of generator trip will activate a generator lockout via the generator lockout relays 86-1/1G and 86-2/1G (**Figure 25**). When activated, either relay will initiate the following:

- Turbine trip
- Generator output breaker 8000 trip (8020 Unit 2)
- Generator output breaker 8010 trip (8030 Unit 2)
- Exciter field breaker trip
- Trip of breakers uA1-1, uA2-1, uA3-1 and uA4-1, supply to 6.9 KV buses from unit auxiliary transformer
- Stops main transformer cooling
- Stops unit auxiliary transformer cooling

- Stops isophase bus duct cooling
- Enables transformer fire protection deluge valves

Any one of the following events in coincidence with generator reverse power will initiate a generator lockout (**Figure 27**):

- primary water head tank level low
- generator terminal box water level high

The above events will also initiate a turbine trip, with or without generator reverse power.

Turbine Trip

This trip limits the temperature and pressure transients on the Reactor imposed by a trip of the Main Turbine/Generator. This is an anticipatory trip. If it didn't function then the RCS would meet other trip criteria during the transient.

Setpoint for the trip is 2 out of 3 Trip Oil Pressure Switches at 72.3 PSIG or 4 out of 4 Turbine Stop Valves Closed and is interlocked with **P-9** so that it won't actuate a reactor trip if the reactor power is < 50% (**Figure 18**).

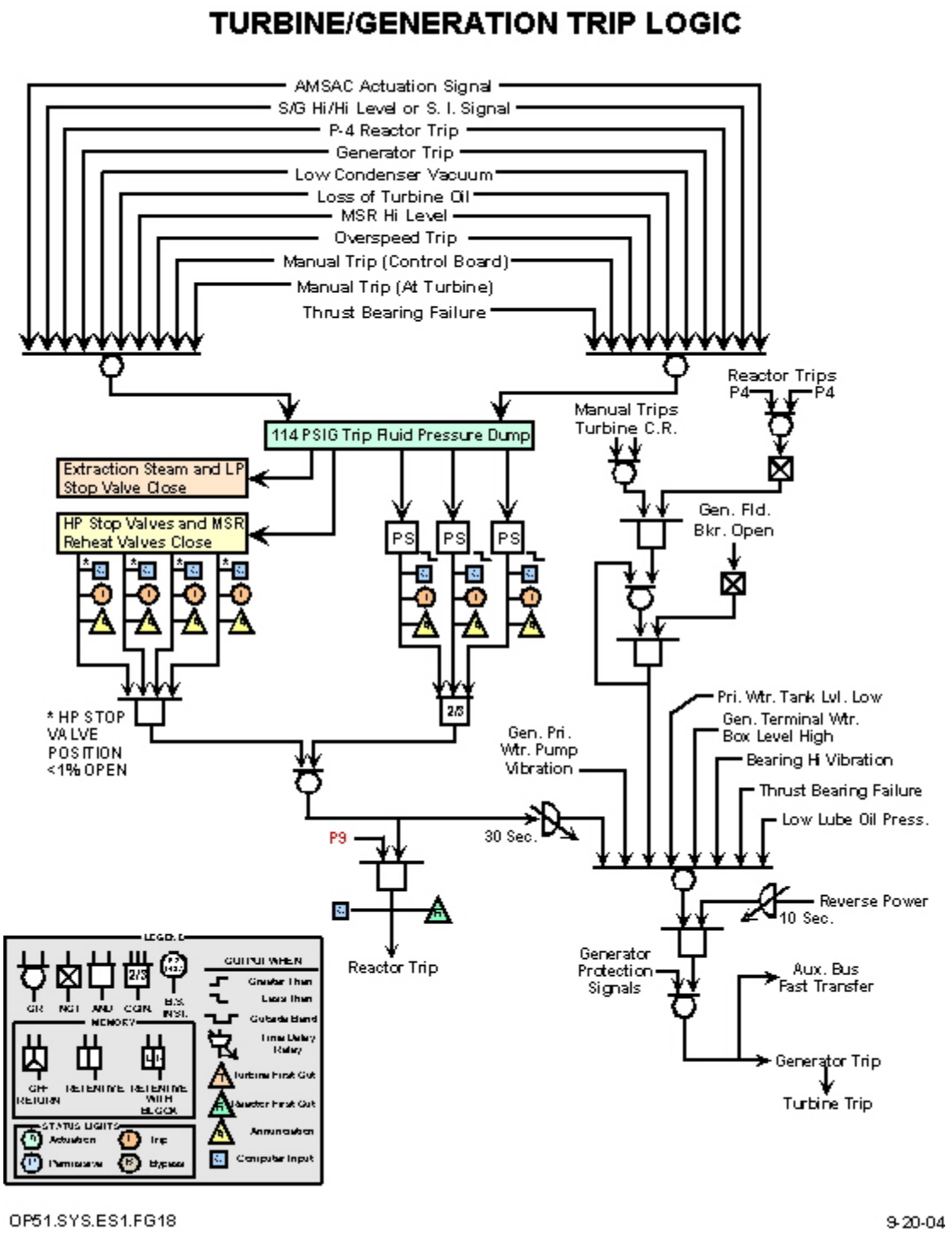

Figure 18 - Turbine/Generation Trip Logic

At power < 50%, the Steam Dump and Rod Control systems should limit the transient to allowable values for the RCS, and no other trip setpoint should be approached. The T.S. setpoint for the Low Trip System Pressure is 59 psig, but due to where the pressure switch is located an additional 13.3 psig is added to the setpoint of the actual pressure switch to account for the head of fluid above the switch.

REACTOR PROTECTION LOCKOUT

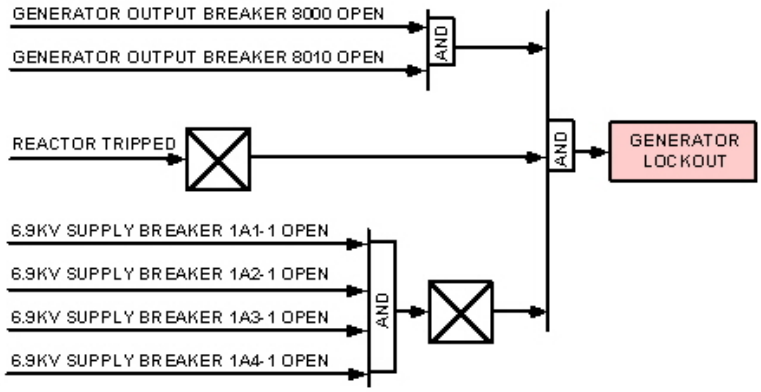

GENERATOR TRIP WITHOUT A LOCKOUT

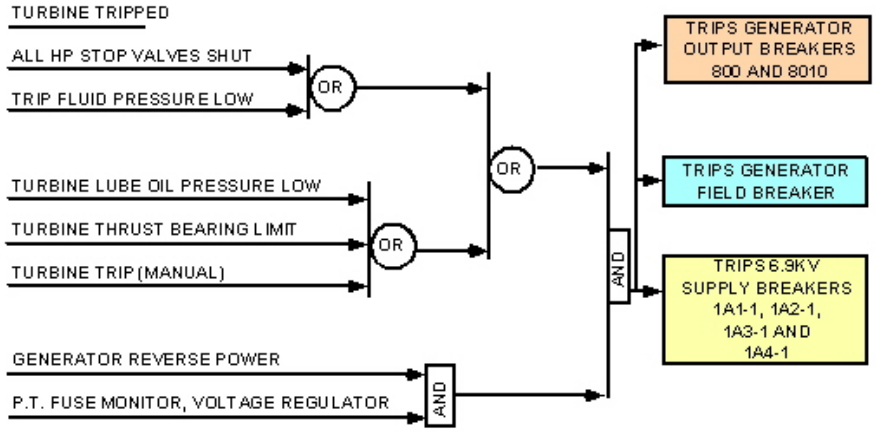

THE POTENTIAL TRANSFORMER VOLTAGE BALANCE FUSE BLOWN THE TRIPS ARE BLOCKED

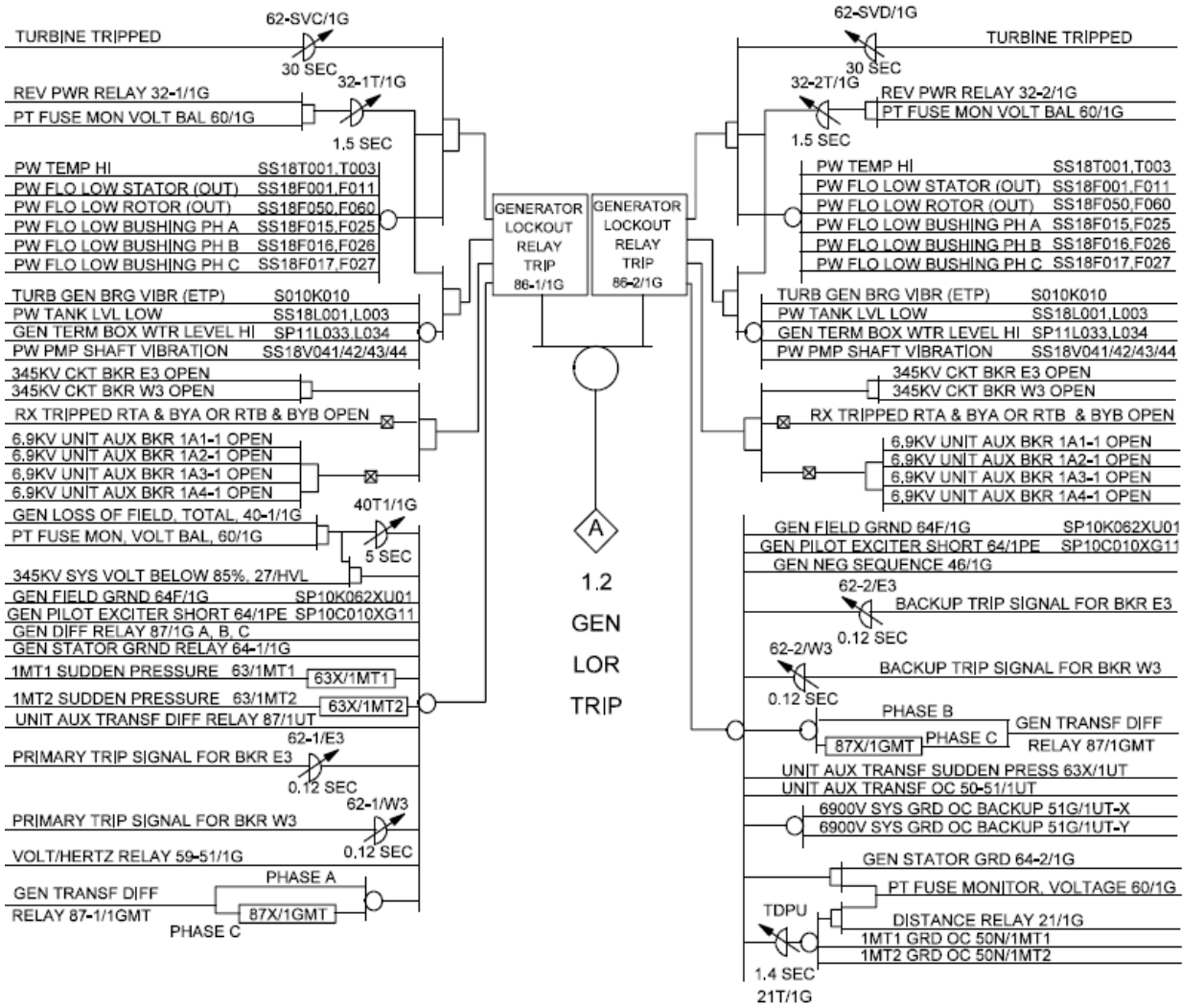
TURBINE TRIPPED
62-SVC/1G
30 SEC
REV PWR RELAY 32-1/1G
PT FUSE MON VOLT BAL 60/1G
32-1T/1G
1.5 SEC
PW TEMP HI SS18T001,T003
PW FLO LOW STATOR (OUT) SS18F001,F011
PW FLO LOW ROTOR (OUT) SS18F050,F060
PW FLO LOW BUSHING PH A SS18F015,F025
PW FLO LOW BUSHING PH B SS18F016,F026
PW FLO LOW BUSHING PH C SS18F017,F027
TURB GEN BRG VIBR (ETP) S010K010
PW TANK LVL LOW SS18L001,L003
GEN TERM BOX WTR LEVEL HI SP11L033,L034
PW PMP SHAFT VIBRATION SS18V041/42/43/44
345KV CKT BKR E3 OPEN
345KV CKT BKR W3 OPEN
RX TRIPPED RTA & BYA OR RTB & BYB OPEN
6.9KV UNIT AUX BKR 1A1-1 OPEN
6.9KV UNIT AUX BKR 1A2-1 OPEN
6.9KV UNIT AUX BKR 1A3-1 OPEN
6.9KV UNIT AUX BKR 1A4-1 OPEN
GEN LOSS OF FIELD, TOTAL, 40-1/1G
PT FUSE MON, VOLT BAL, 60/1G
40T1/1G
5 SEC
345KV SYS VOLT BELOW 85%, 27/HVL
GEN FIELD GRND 64F/1G SP10K062XU01
GEN PILOT EXCITER SHORT 64/1PE SP10C010XG11
GEN DIFF RELAY 87/1G A, B, C
GEN STATOR GRND RELAY 64-1/1G
1MT1 SUDDEN PRESSURE 63/1MT1
63X/1MT1
1MT2 SUDDEN PRESSURE 63/1MT2
63X/1MT2
UNIT AUX TRANSF DIFF RELAY 87/1UT
62-1/E3
PRIMARY TRIP SIGNAL FOR BKR E3
0.12 SEC
62-1/W3
PRIMARY TRIP SIGNAL FOR BKR W3
0.12 SEC
VOLT/HERTZ RELAY 59-51/1G
PHASE A
GEN TRANSF DIFF
RELAY 87-1/1GMT
87X/1GMT
PHASE C
GENERATOR LOCKOUT RELAY TRIP 86-1/1G
GENERATOR LOCKOUT RELAY TRIP 86-2/1G
A
1.2
GEN
LOR
TRIP
62-SVD/1G
30 SEC
TURBINE TRIPPED
32-2T/1G
REV PWR RELAY 32-2/1G
PT FUSE MON VOLT BAL 60/1G
1.5 SEC
PW TEMP HI SS18T001,T003
PW FLO LOW STATOR (OUT) SS18F001,F011
PW FLO LOW ROTOR (OUT) SS18F050,F060
PW FLO LOW BUSHING PH A SS18F015,F025
PW FLO LOW BUSHING PH B SS18F016,F026
PW FLO LOW BUSHING PH C SS18F017,F027
TURB GEN BRG VIBR (ETP) S010K010
PW TANK LVL LOW SS18L001,L003
GEN TERM BOX WTR LEVEL HI SP11L033,L034
PW PMP SHAFT VIBRATION SS18V041/42/43/44
345KV CKT BKR E3 OPEN
345KV CKT BKR W3 OPEN
RX TRIPPED RTA & BYA OR RTB & BYB OPEN
6.9KV UNIT AUX BKR 1A1-1 OPEN
6.9KV UNIT AUX BKR 1A2-1 OPEN
6.9KV UNIT AUX BKR 1A3-1 OPEN
6.9KV UNIT AUX BKR 1A4-1 OPEN
GEN FIELD GRND 64F/1G SP10K062XU01
GEN PILOT EXCITER SHORT 64/1PE SP10C010XG11
GEN NEG SEQUENCE 46/1G
62-2/E3
BACKUP TRIP SIGNAL FOR BKR E3
0.12 SEC
62-2/W3
BACKUP TRIP SIGNAL FOR BKR W3
0.12 SEC
PHASE B
PHASE C
87X/1GMT
GEN TRANSF DIFF
RELAY 87/1GMT
UNIT AUX TRANSF SUDDEN PRESS 63X/1UT
UNIT AUX TRANSF OC 50-51/1UT
6900V SYS GRD OC BACKUP 51G/1UT-X
6900V SYS GRD OC BACKUP 51G/1UT-Y
GEN STATOR GRD 64-2/1G
PT FUSE MONITOR, VOLTAGE 60/1G
TDPU
DISTANCE RELAY 21/1G
1MT1 GRD OC 50N/1MT1
1MT2 GRD OC 50N/1MT2
1.4 SEC
21T/1G

EVENTS WHICH IN COINCIDENCE WITH GENERATOR REVERSE POWER AND TURBINE TRIP WILL INITIATE A GENERATOR LOCKOUT

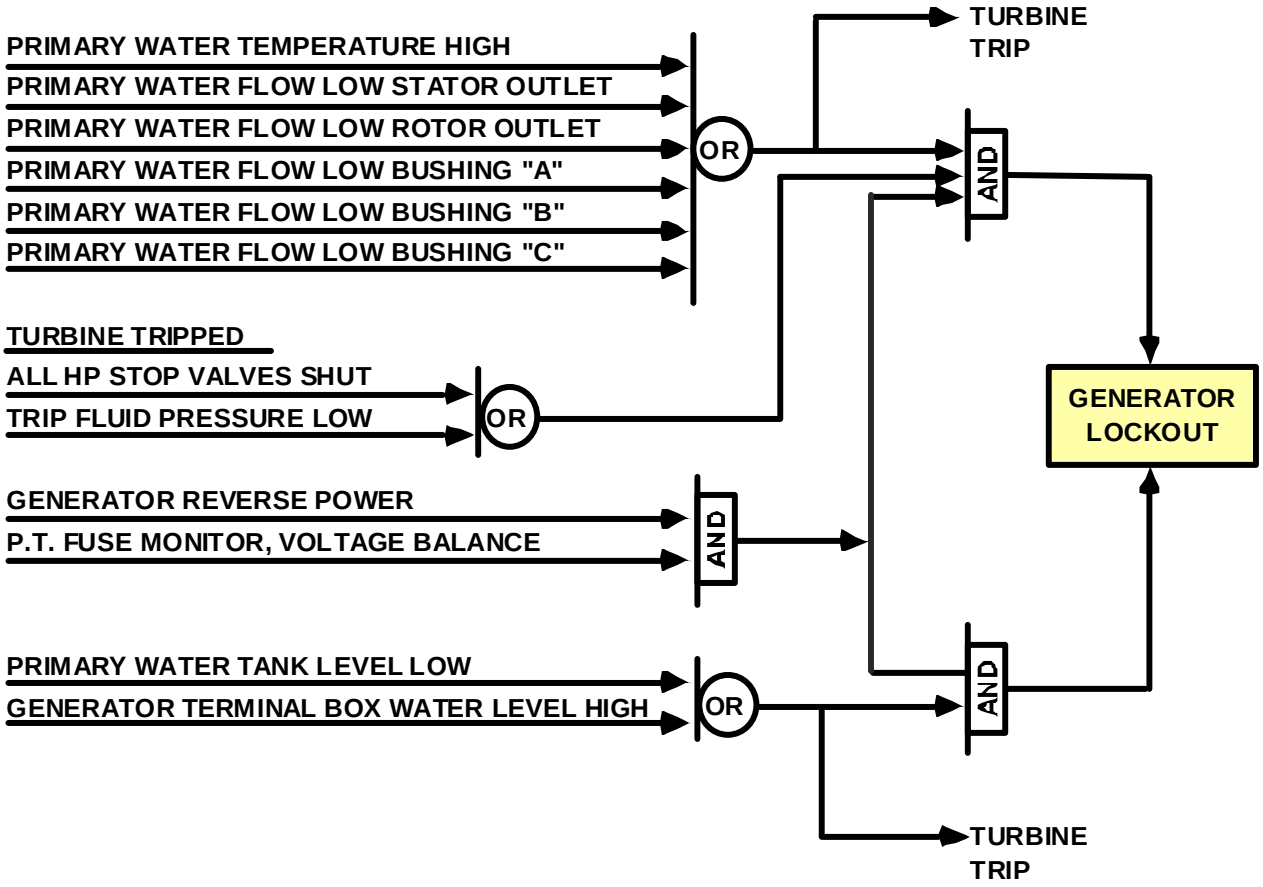

AFTER TURBINE TRIP, THE GENERATOR TRIP IS DELAYED 30 SECONDS TO FURNISH UNINTERRUPTED POWER TO THE RCP MOTORS.

IF THE POTENTIAL TRANSFORMER VOLTAGE BALANCE FUSE IS BLOWN THE TRIPS ARE BLOCKED

Examination Outline Cross-Reference	Level	RO	SRO
Rev. Date: 1/6/2015	Tier #	2	n/a
Change: 2	Group #	2	n/a
	K/A #	086 K6.04	n/a
Level of Difficulty: 2	Importance Rating	2.6	n/a

Fire Protection: Knowledge of the effect of a loss or malfunction of the following will have on the Fire Protection System: Fire, smoke, and heat detectors

Question 38

Unit 2 plant conditions:

- Reactor power = 100%
- An alarm is received on the Fire Detection main control panel due to activation of the Unit 2 Cable Spreading Room Fire Suppression System
- A Nuclear Equipment Operator in the Cable Spreading Room at the time reports that there is no evidence of a fire and depresses the “ABORT” pushbutton

Based on the above conditions, complete the following statements:

1. What is the minimum number of fire detectors that would have to fail to cause the system to activate?

2. If the “ABORT” button is released, what is the status of the system?

   A. (1) ONE, causing automatic actuation.
      (2) The system is locked out until the signal is reset

   B. (1) ONE, allowing manual actuation.
      (2) The system will initiate if 60 seconds has elapsed since releasing the ABORT button.

   C. (1) TWO, allowing manual actuation.
      (2) The system is locked out until the signal is reset

   D. (1) TWO, causing automatic actuation.
      (2) The system will initiate if 60 seconds has elapsed since releasing the ABORT button.

Answer: D

The question matches the KA by requiring knowledge of how a failed detector affects the fire suppression system.

Explanation / Plausibility:

A. 1st part is incorrect because it takes 2 detectors to automatically activate the HALON fire suppression system. It is plausible because 1 detector would be conservative and waiting for 2 detectors will delay activation (non-conservative). 2nd part is incorrect because it will activate as soon as the 60 seconds expire if the ABORT button is not depressed. It is plausible because it is the only reset/override switch that requires it to be continually depressed to prevent activation.

B. 1st part is incorrect but plausible (see A for 1 vice 2 detector discussion) Allowing manual actuation is plausible because there is also a pre-action suppression system in the CSRs that must be manually actuated. 2nd part is correct.

C. 1st part is incorrect because two detector failures will automatically actuate the halon system. Manual actuation is plausible because the CSRs also have a pre-action suppression system that must be manually actuated. 2nd part is incorrect but plausible (see A).

D. 1st part is correct. 2nd part is correct.

Technical Reference: (Attach if not previously provided including revision number)	Fire Protection Study Guide LO21.SYS.FP1, STA-738

Proposed references to be provided to applicants during examination: _____

Learning Objective: DESCRIBE the components of the Fire Suppression system including interrelations with other systems to include interlocks and control loops. (LO21.SYS.FP1.OB03)

Question Source:	Bank #		
	Modified Bank#		
	New	X	
Question History:	Last NRC Exam		
Question Cognitive Level	Memory or Fundamental Knowledge		X
	Comprehension or Analysis		
10 CFR Part 55 Content:	55.41	41.7	
	55.43	n/a	

OE11058 - AUTOMATIC HALON ACTUATION IN THE UNIT 2 CABLE SPREAD ROOM COMANCHE PEAK UNIT 2, APRIL 2, 1999

On April 2, 1999, an automatic Halon actuation occurred in the Unit 2 Cable Spread Room. Unit 2 was in refueling outage 2RF04 with all fuel off-loaded from the core. There were no activities occurring in the Unit 2 Cable Spread Room which might be expected to cause an ionization smoke detector to alarm. Two Nittan Model N12,000-3S smoke detectors failed approximately 1 hour apart. A detailed investigation did not reveal any discernible reason for the two failures other than the detectors had been installed in the plant for an extended period of time and the PM for sensitivity testing was ceased in 1997 due to the failure of a single detector only causing an alarm. Post-event testing of the two detectors revealed them to be weak.


HALON 1301
FIRE
SUPPRESSION SYSTEM
LOCAL CONTROL PANEL
CPX-EIPRLV-42A
UNIT TWO
CABLE SPREADING
ROOM

Cable Spread Room Halon System Operation

A main reserve selector switch determines bank discharge response to a fire. Halon systems are automatically actuated by ion smoke detectors (at least 2) within the serviced area. Actuation will initiate a fire alarm light and horn at the local panel. 60 seconds later the Halon will be discharged. A blue panel light indicates the completion of bank discharge.

The local fire alarm is also indicated at the control room fire panel. The alarm will provide for damper closure or, in the case of the cable spreading room, stop the supply and exhaust fans.

If it is necessary or desirable to shift over to the remaining bank, it can be discharged by selecting the selector switch to the charged reserve bank. To clear the alarm from the panel, the system reset pushbutton (inside cabinet) should be pressed. Provided the alarm condition is clear, this action will clear the alarm, if the conditions resulting in the alarm still exist, the alarm will reinstate itself. The silence button will silence the horn at the Halon panel.

The panel abort buttons allow a delay of Halon discharge, so long as the button is depressed.

The system discharge switch allows release of the on service bank after the 60 second timer and will activate the fire alarm.

The "yellow" trouble alarm is activated by opening any of the following circuits:

- AC power source
- Remote fire panel signal
- Local alarm circuit
- Release circuit
- Main pressure switch circuit
- Reserve pressure switch circuit
- Alarm silence switch
- Remote pull station circuit
- Remote abort circuit

The trouble circuit performs the following actions:

- Initiates trouble alarm and light at local panel
- Initiates trouble alarm and light at the remote panel
- Both alarms clear with a clearing of trouble cause

Hose stations are located inside and adjacent to the cable spreading areas for secondary suppression. Fire dampers equipped with fusible links and a Halon override are provided for isolation of the ventilation system for these areas. Each system is provided with local alarms and annunciators in the control room. A control cabinet is provided outside in the respective areas to house all necessary auxiliary relays, timing relays and terminal blocks.

HALON SYSTEMS (FIGURE 7)

Upon receiving at least two indications of a fire within the area a Halon actuation is initiated. A local area alarm will warn of the pending Halon release. Individuals in the area must evacuate the area. A 60 second timer starts upon actuation. The ABORT button on the local Halon Panel

must be DEPRESSED and HELD in order to avoid Halon release. If the ABORT button is released, the Halon will actuate if the 60 second timer has elapsed.

Actuation of a Halon system is annunciated on the Main Fire Control Panel and the local control panel. Each system is independent and equipped with a separate set of controls and detectors. The system automatically stops the ECB supply and exhaust fans upon a cable spread room Halon actuation.

Cable Spreading Room Fire

If a fire should occur in a Cable Spreading Room, the ionization detectors located in these areas will actuate the automatic time delay relays sounding a local alarm to evacuate the area and an alarm in the Control Room. The Halon Suppression System will release the first halon charge automatically upon closure of the time delay relay. The reserve Halon charge can be released manually from the local Halon control panel if required. If the reserve charge is not required to extinguish the fire, the reserve supply can be aligned to the fire detectors in the area for automatic operation.

ATTACHMENT 8.B
PAGE 7 OF 15

FIRE DETECTION INSTRUMENTATION LIST

	INSTRUMENT LOCATION	FIRE ZONE	ROOM	ELEV.	TOTAL NUMBER OF INSTRUMENTS* HEAT (A/B)	FLAME (A/B)	SMOKE (A/B)
2.	Electrical & Control Building (Continued)						
		60	127	792'0"			2/0
		61	129	792'0"			2/0
		63	134	807'0"			0/35[1][6]
		64	133	807'0"			0/35[1][6]

ATTACHMENT 8.B
PAGE 15 OF 15

FIRE DETECTION INSTRUMENTATION LIST

TABLE NOTATIONS

*(A/B): A is number of Function A (early warning fire detection and notification only) instruments.

B is number of Function B (actuation of Fire Suppression Systems and early warning and notification).

#: Zone V radiation area outside containment.

(1) Two or more adjacent inoperable detectors are not permitted unless all points within the affected area are within 21 feet (horizontal distance) of an OPERABLE detector.

(2) The detection instrument is located in the return air duct work for the Control Room HVAC System.

(3) These detection instruments are located in HVAC duct work and detect smoke entering the fresh air supply to the Control Room (Fire Zone 65) from the south side of the Electrical and Control Building.

(4) These detection instruments are located in HVAC duct work and detect smoke entering the fresh air supply to the Control Room (Fire Zone 65) from the north side of the Electrical and Control Building.

(5) These detection instruments are located in HVAC duct work and detect smoke entering the air supply to the Control Room (Fire Zone 65) from the HVAC units serving that system.

(6) Detectors initiate an alarm in the Control Room for manual actuation of the pre-action system in this area.

(7) These detection instruments are located in the Emergency Filtration Filter Units discharge ductwork.

Examination Outline Cross-Reference	Level	RO	SRO
Rev. Date: 1/6/2015	Tier #	1	n/a
Change: 2	Group #	1	n/a
	K/A #	007 EK1.03	n/a
Level of Difficulty: 2	Importance Rating	3.7	n/a

Reactor Trip – Stabilization – Recovery: Knowledge of the operational implications of the following concepts as they apply to the reactor trip: Reasons for closing the main turbine governor valve and the main turbine stop valve after a reactor trip.

Question 39

Unit 1 sequence of events:

- Reactor power = 100%
- Running MFW Pumps trip
- The reactor tripped
- The crew enters EOP-0.0A, REACTOR TRIP OR SAFETY INJECTION
- The Balance of Plant Operator attempts to trip the Main Turbine using the Turbine Trip pushbutton
- The Main Turbine fails to trip

Based on the above plant conditions, the next action directed by EOP-0.0A is to ____(1)____ and the reason for this action is to ____(2)____.

A. (1) close ALL Main Steam Isolation Valves
   (2) prevent steaming the SGs dry

B. (1) close ALL Main Steam Isolation Valves
   (2) prevent an excessive RCS cooldown

C. (1) pull-out ALL EHC fluid pumps
   (2) prevent steaming the SGs dry

D. (1) pull-out ALL EHC fluid pumps
   (2) prevent an excessive RCS cooldown

Answer: D

This question matches the KA by requiring knowledge of the reason for tripping the main turbine after a reactor trip.

Explanation / Plausibility:

A. 1st part is incorrect because EOP-0.0 step 2 RNO states that if the turbine will not trip, THEN pull-out all EHC fluid pumps. It is plausible because if this step is unsuccessful, it then directs closing the MSIVs. 2nd part is incorrect because the reason for tripping the turbine is to stop the cooldown which would add positive reactivity and possibly initiate SI. It is plausible because analysis during an ATWT has shown that a turbine trip is necessary within 30 seconds to conserve SG inventory.

B. 1st part is incorrect but plausible (see A). 2nd part is correct.

C. 1st part is correct. 2nd part is incorrect but plausible (see A).

D. 1st part is correct. 2nd part is correct.

Technical Reference: (Attach if not previously provided including revision number)	EOP 0.0A FRS-0.1A

Proposed references to be provided to applicants during examination: _____

Learning Objective:	ANALYZE the recovery technique used and the procedure steps of EOS-0.1, Reactor Trip Response. Given a procedural Step, NOTE, or CAUTION, DISCUSS the reason or basis for the Step, NOTE, or CAUTION in FRS-0.1A/B, "RESPONSE TO NUCLEAR GENERATION/ATWT" (LO21. ERG.FS1.OB04)		
Question Source:	Bank #		
	Modified Bank#		
	New	X	
Question History:	Last NRC Exam		
Question Cognitive Level	Memory or Fundamental Knowledge		
	Comprehension or Analysis		X
10 CFR Part 55 Content:	55.41	41.8, 41.10	
	55.43	n/a	

STEP	ACTION/EXPECTED RESPONSE	RESPONSE NOT OBTAINED
1	Verify Reactor Trip:	
	a. Verify the following: • Reactor trip breakers - AT LEAST ONE OPEN -AND- • Neutron flux - DECREASING	a. Manually trip reactor from both trip switches. **IF** reactor will not trip, **THEN** momentarily de-energize 480V normal switchgear 1B3 **AND** 1B4. **IF** reactor **NOT** tripped, **THEN** go to FRS-0.1A, RESPONSE TO NUCLEAR POWER GENERATION/ATWT, Step 1.
	b. All control rod position rod bottom lights - ON	
2	Verify Turbine Trip: • All HP turbine stop valves - CLOSED	Manually trip turbine. **IF** the turbine will **NOT** trip, **THEN** pull-out all EHC fluid pumps. **IF** turbine still **NOT** tripped, **THEN** close or verify closed main steamline isolation valves.

ATTACHMENT 10
PAGE 3 OF 38

BASES

- Turbine Building area switchgear heater (CP1-VAHEDH-01) (Normally aligned to operate based on area temperature. Re-energized when power restored to 1B4.)

When 1B3 and 1B4 are de-energized to initiate control and shutdown rod insertion (initiate reactor trip), the P-4 signal generated from the reactor trip and bypass breakers will not be present. The absence of the P-4 signal results in other automatic actions not being available. The trip of the Main Turbine from a Reactor Trip will not be present and the Feedwater Isolation signal from Low Tavg with P-4 will not occur, which may result in a prolonged RCS cooldown and a Safety Injection signal actuation. Tripping the Main Turbine in the following step helps to limit the RCS cooldown.

Steam Generator level and feed flow status are checked in subsequent recovery actions. The reactor trip and bypass breakers must still be opened in order to generate the P-4 signal for subsequent actions (e.g., Reset SI). Subsequent actions in this procedure (Attachment 2) or EOS-0.1A, REACTOR TRIP RESPONSE (Step 2) will be performed to open the reactor trip and bypass breakers.

If the reactor cannot be tripped (e.g., 1B3 or 1B4 cannot be de-energized from control room), a transition is made to FRS-0.1A, RESPONSE TO NUCLEAR POWER GENERATION/ATWT, to deal with ATWT conditions.

STEP 2: The turbine is tripped to prevent an uncontrolled cooldown of the RCS due to steam flow that the turbine would require.

ATTACHMENT 3
PAGE 1 OF 15

BASES

STEP 1: Reactor trip must be verified to ensure that the only heat being added to the RCS is from decay heat and reactor coolant pump heat. The safeguards systems that protect the plant during accidents are designed assuming that only decay heat and pump heat are being added to the RCS. If the reactor cannot be tripped, then the control rods should be inserted into the core in order to decrease reactor power.

If the reactor is not tripped, the intent of the RNO actions is to insert the rods at the fastest rate available. If RCS temperature has increased above the current reference temperature, then the rods should automatically be driven in by the Rod Control System. When the Rod Control System signal decreases to less than the speed for manual rod insertion, the operator is required to manually insert rods to maximize negative reactivity addition.

The desired method for manual rod insertion is with the Control Rod Bank Select in the "manual" position (Control Rods insert in the normal insertion sequence and overlap). If "manual" Control Rod Bank Select position does not function to manually insert rods, individual Control Bank position may be used to allow manual insertion of control rods. The Control Banks should be inserted in the following order:
1. Control Bank D (CBD), 2. Control Bank C (CBC), 3. Control Bank B (CBB), and 4. Control Bank A (CBA). The core flux peaking that may be encountered with this method of Control Rod insertion is secondary concern to that of the need to shutdown the reactor.

The verification of at least one reactor trip breaker open ensures the supply of power to the mechanisms that hold the control and shutdown rods withdrawn has been removed. If a reactor trip breaker is not open, subsequent verification of reactor trip breaker status (EOP-0.0A or EOS-0.1A) provides instruction that facilitates opening of the closed breaker. The action to verify reactor trip breaker position is intended to include the action to verify the reactor trip bypass breakers in the event the bypass breakers have been closed during power operation (e.g., for testing).

STEP 2: The turbine is tripped to prevent an uncontrolled cooldown of the RCS due to steam flow that the turbine would require. For an ATWT event where a loss of normal feedwater has occurred, analyses have shown that a turbine trip is necessary (within 30 seconds) to conserve Steam Generator inventory. Failing to trip the turbine permits higher steam release from the Steam Generators which reduces the time to a Steam Generator dry out condition.

Examination Outline Cross-Reference	Level	RO	SRO
Rev. Date: 1/6/2015	Tier #	1	n/a
Change: 2	Group #	1	n/a
	K/A #	008 AK2.02	n/a
Level of Difficulty: 3	Importance Rating	2.7	n/a

Pressurizer Vapor Space Accident: Knowledge of the interrelations between the Pressurizer Vapor Space Accident and the following: Sensors and Detectors.

Question 40

Unit 1 plant conditions:

- Reactor power = 100%
- RCS pressure is at setpoint
- PRZR PRESS CTRL CHAN SELECT (1-PS-455F) on 1-CB-05, is selected to 455/456
- PRZR PORV PCV-455A fails open due to a failed PRZR pressure transmitter
- ABN-705 PRESSURIZER PRESSSURE MALFUNCTION is entered

Based on the above conditions answer the following questions:

1. In accordance with ABN-705, the operator should next:

2. When Switch 1-PS-455F is repositioned, the bad signal will be replaced with a signal from which pressure transmitter?

   A. (1) close PCV-455A or its block valve
      (2) PT-457

   B. (1) close PCV-455A or its block valve
      (2) PT-458

   C. (1) close PCV-455A and its block valve
      (2) PT-457

   D. (1) close PCV-455A and its block valve
      (2) PT-458

Answer: C

This question matches the KA by requiring knowledge of how failed PRZR pressure detectors require action to terminate a PRZR vapor space accident and how selecting an alternate channel restores automatic PORV control.

Explanation / Plausibility:

A. 1st part is incorrect because IAW ABN-705, the next action is to close PCV 455A and its block valve. 2nd part is correct because PT-457 is the alternate channel for PT-455.

B. 1st part is incorrect (See A). 2nd part is incorrect because PT-457 is the alternate PT for PT-455. It is plausible because PT-458 is the alternate for PT-456.

C. 1st part is correct (See A). 2nd part is correct (See A).

D. 1st part is correct (See A). 2nd part is incorrect but plausible (See B).

Technical Reference: (Attach if not previously provided including revision number)	Pressurizer Pressure and Level Control Study Guide ABN-705

Proposed references to be provided to applicants during examination: _____

Learning Objective: **EXPLAIN** the instrumentation and controls of the Pressurizer Pressure Control System and **PREDICT** the system response. (LO21.SYS.PP1.OB04)

Question Source:	Bank #	
	Modified Bank#	
	New	X
Question History:	Last NRC Exam	
Question Cognitive Level	Memory or Fundamental Knowledge	
	Comprehension or Analysis	X
10 CFR Part 55 Content:	55.41	41.7
	55.43	n/a

Pressurzer Pressure and Level Control Study Guide

Pressure Measuring Instruments

Pressure is a force exerted by some medium, usually a fluid, over a unit area (e.g. pounds per square inch). Pressurizer pressure instruments measure the difference between pressure in the pressurizer and in the containment building atmosphere. This measurement is referred to as gauge pressure and is expressed as pounds per square inch gauge (psig).

Five pressure detectors measure the pressure in the steam space at the top of the pressurizer. CPNPP uses bourdon tube instruments to provide pressurizer pressure signals. **(See Figure 2)** The bourdon tube elastic transducer operates on the principle that a deflection or deformation of a bent tube with an applied internal pressure is relative to the balance of the internal pressure force and the elasticity of the tube material. We indirectly measure pressure by measuring the displacement of the end of the tube as it tends to straighten with increasing internal pressure. The resulting displacement is used to develop an electronic signal by positioning an electrical pickup device.

Each pressure detector is associated with a pressure transmitter that develops an electronic signal for remote indication. Transmitter u-PT-455F provides indication at the Remote Shutdown Panel. Transmitters u-PT-455, 456, 457, and 458 provide Control Room indication, control, protection, and alarm functions. 118VAC instrument buses supply power to the transmitters, uPC1 to PT-455, uPC2 to PT-456, uPC3 to PT-457, and uPC4 to PT-458. Power is supplied to each instrument channel from separate instrument busses in order to provide electrical separation.

Pressure channels 455, 456, 457 and 458 provide indication on the Main Control Board with 1700 - 2500 psig meters on control board panel u-CB-05. Each of these channels also provides input to the Solid State Protection System (SSPS) for the generation of reactor protection signals. A switch on the control board selects one of these channels to supply a chart recorder on u-CB-05. **(See Figure 3)** Another switch (1/u-PS-455F), located on u-CB-05, is a three-position switch that directs two channels to provide controlling functions. The center position of the switch, labeled 455/456, is normally selected. In this position, channels 455 and 456 are selected for control. The position labeled 457/456 substitutes channel 457 for channel 455, and the position labeled 455/458 substitutes channel 458 for channel 456.

The controlling signals function as follows:

Channel 455 normally selected - channel 457 alternate:

Provides actual pressure signal for the PRZR master pressure controller u-PK-455A

Controls both spray valve controllers u-PK-455B & C

Controls variable heater output

Actuates power operated relief valve u-PCV-455A at +100 psig error signal

Actuates pressure deviation hi alarm at +75 psig error signal

Actuates low pressure alarm and energize backup heaters at –25 psig error signal

Channel 456 normally selected - channel 458 alternate:

Actuates power operated relief valve u-PCV-456 at 2335 psig

Actuates high pressure alarm at 2310 psig

Pressurizer Pressure Controller

The pressurizer master pressure controller is a PI (Proportional + Integral) type controller with an associated manual/auto station (u-PK-455A) located on u-CB-05. **(See Figures 4 & 5)** In automatic operation, the controller uses pressurizer heaters and spray valves to maintain pressurizer pressure at 2235 psig under normal conditions, and a power operated relief valve (PORV) to mitigate an overpressure transient (e.g. turbine runback). Heaters, spray valves and PORV operate according to the controller output signal, which is indicated on the M/A station. In manual operation, the controller output signal is adjusted using raise and lower pushbuttons. Since the 2235 psig automatic pressure setpoint cannot be adjusted, the master pressure controller must be operated manually to control pressure during plant heatup and cooldown.

In automatic operation, the pressure control circuitry compares actual pressurizer pressure with the setpoint of 2235 psig to produce an error signal. The proportional function of the PI controller produces an output in proportion to the error signal. The integral, or reset function modifies controller output in order to drive actual pressure back to setpoint. The integral function operates on a time constant that determines how often the integral gain, or reset signal is added to the error signal. A derivative, or rate-of-change function for the master pressure controller is available but is not used at CPNPP.

The compensated error signal from the master pressure controller controls spray valves, heaters, and PORV u-PCV-0455A in order to drive pressure to the 2235 psig setpoint. The actual pressure at which the spray valves, heaters or PORV operate is based upon the amount of time that actual pressure is off setpoint. Time passing with pressure off setpoint causes the compensated error signal to continue to increase even if the actual pressure deviation is constant. Controller output automatically changes, operating equipment as necessary to bring pressure back to 2235 psig. The master pressure controller is manually operated by setting the output signal to operate the desired equipment. The following table equates equipment operation with controller output and uncompensated error.

ACTION	OUTPUT %	ERROR SIGNAL	NOMINAL VALUE
PORV opens	81.3	+100 psig	2335 psig
PORV closes	75.0	+80 psig	2315 psig
Spray valves fully open	73.4	+75 psig	2310 psig
Spray valves start to open	57.8	+25 psig	2260 psig

Variable heaters off	54.7	+15 psig	2250 psig
Normal operating pressure	50.0	- 0 -	2235 psig
Variable heaters fully on	45.3	–15 psig	2220 psig
Backup heaters off	44.7	–17 psig	2218 psig
Backup heaters on	42.2	–25 psig	2210 psig

Pressure Measuring Instruments

Pressure is a force exerted by some medium, usually a fluid, over a unit area (e.g. pounds per square inch). Pressurizer pressure instruments measure the difference between pressure in the pressurizer and in the containment building atmosphere. This measurement is referred to as gauge pressure and is expressed as pounds per square inch gauge (psig).

Five pressure detectors measure the pressure in the steam space at the top of the pressurizer. CPNPP uses bourdon tube instruments to provide pressurizer pressure signals. **(See Figure 2)** The bourdon tube elastic transducer operates on the principle that a deflection or deformation of a bent tube with an applied internal pressure is relative to the balance of the internal pressure force and the elasticity of the tube material. We indirectly measure pressure by measuring the displacement of the end of the tube as it tends to straighten with increasing internal pressure. The resulting displacement is used to develop an electronic signal by positioning an electrical pickup device.

Each pressure detector is associated with a pressure transmitter that develops an electronic signal for remote indication. Transmitter u-PT-455F provides indication at the Remote Shutdown Panel. Transmitters u-PT-455, 456, 457, and 458 provide Control Room indication, control, protection, and alarm functions. 118VAC instrument buses supply power to the transmitters, uPC1 to PT-455, uPC2 to PT-456, uPC3 to PT-457, and uPC4 to PT-458. Power is supplied to each instrument channel from separate instrument busses in order to provide electrical separation.

Pressure channels 455, 456, 457 and 458 provide indication on the Main Control Board with 1700 - 2500 psig meters on control board panel u-CB-05. Each of these channels also provides input to the Solid State Protection System (SSPS) for the generation of reactor protection signals. A switch on the control board selects one of these channels to supply a chart recorder on u-CB-05. **(See Figure 3)** Another switch (1/u-PS-455F), located on u-CB-05, is a three-position switch that directs two channels to provide controlling functions. The center position of the switch, labeled 455/456, is normally selected. In this position, channels 455 and 456 are selected for control. The position labeled 457/456 substitutes channel 457 for channel 455, and the position labeled 455/458 substitutes channel 458 for channel 456.

The controlling signals function as follows:

Channel 455 normally selected - channel 457 alternate:

Provides actual pressure signal for the PRZR master pressure controller u-PK-455A

Controls both spray valve controllers u-PK-455B & C

Controls variable heater output

Actuates power operated relief valve u-PCV-455A at +100 psig error signal

Actuates pressure deviation hi alarm at +75 psig error signal

Actuates low pressure alarm and energize backup heaters at –25 psig error signal

Channel 456 normally selected - channel 458 alternate:

Actuates power operated relief valve u-PCV-456 at 2335 psig

Actuates high pressure alarm at 2310 psig

Pressurizer Pressure Controller

The pressurizer master pressure controller is a PI (Proportional + Integral) type controller with an associated manual/auto station (u-PK-455A) located on u-CB-05. **(See Figures 4 & 5)** In automatic operation, the controller uses pressurizer heaters and spray valves to maintain pressurizer pressure at 2235 psig under normal conditions, and a power operated relief valve (PORV) to mitigate an overpressure transient (e.g. turbine runback). Heaters, spray valves and PORV operate according to the controller output signal, which is indicated on the M/A station. In manual operation, the controller output signal is adjusted using raise and lower pushbuttons. Since the 2235 psig automatic pressure setpoint cannot be adjusted, the master pressure controller must be operated manually to control pressure during plant heatup and cooldown.

In automatic operation, the pressure control circuitry compares actual pressurizer pressure with the setpoint of 2235 psig to produce an error signal. The proportional function of the PI controller produces an output in proportion to the error signal. The integral, or reset function modifies controller output in order to drive actual pressure back to setpoint. The integral function operates on a time constant that determines how often the integral gain, or reset signal is added to the error signal. A derivative, or rate-of-change function for the master pressure controller is available but is not used at CPNPP.

The compensated error signal from the master pressure controller controls spray valves, heaters, and PORV u-PCV-0455A in order to drive pressure to the 2235 psig setpoint. The actual pressure at which the spray valves, heaters or PORV operate is based upon the amount of time that actual pressure is off setpoint. Time passing with pressure off setpoint causes the compensated error signal to continue to increase even if the actual pressure deviation is constant. Controller output automatically changes, operating equipment as necessary to bring pressure back to 2235 psig. The master pressure controller is manually operated by setting the output signal to operate the desired equipment. The following table equates equipment operation with controller output and uncompensated error.

ACTION	OUTPUT %	ERROR SIGNAL	NOMINAL VALUE
PORV opens	81.3	+100 psig	2335 psig
PORV closes	75.0	+80 psig	2315 psig
Spray valves fully open	73.4	+75 psig	2310 psig
Spray valves start to open	57.8	+25 psig	2260 psig
Variable heaters off	54.7	+15 psig	2250 psig
Normal operating pressure	50.0	- 0 -	2235 psig
Variable heaters fully on	45.3	–15 psig	2220 psig
Backup heaters off	44.7	–17 psig	2218 psig
Backup heaters on	42.2	–25 psig	2210 psig

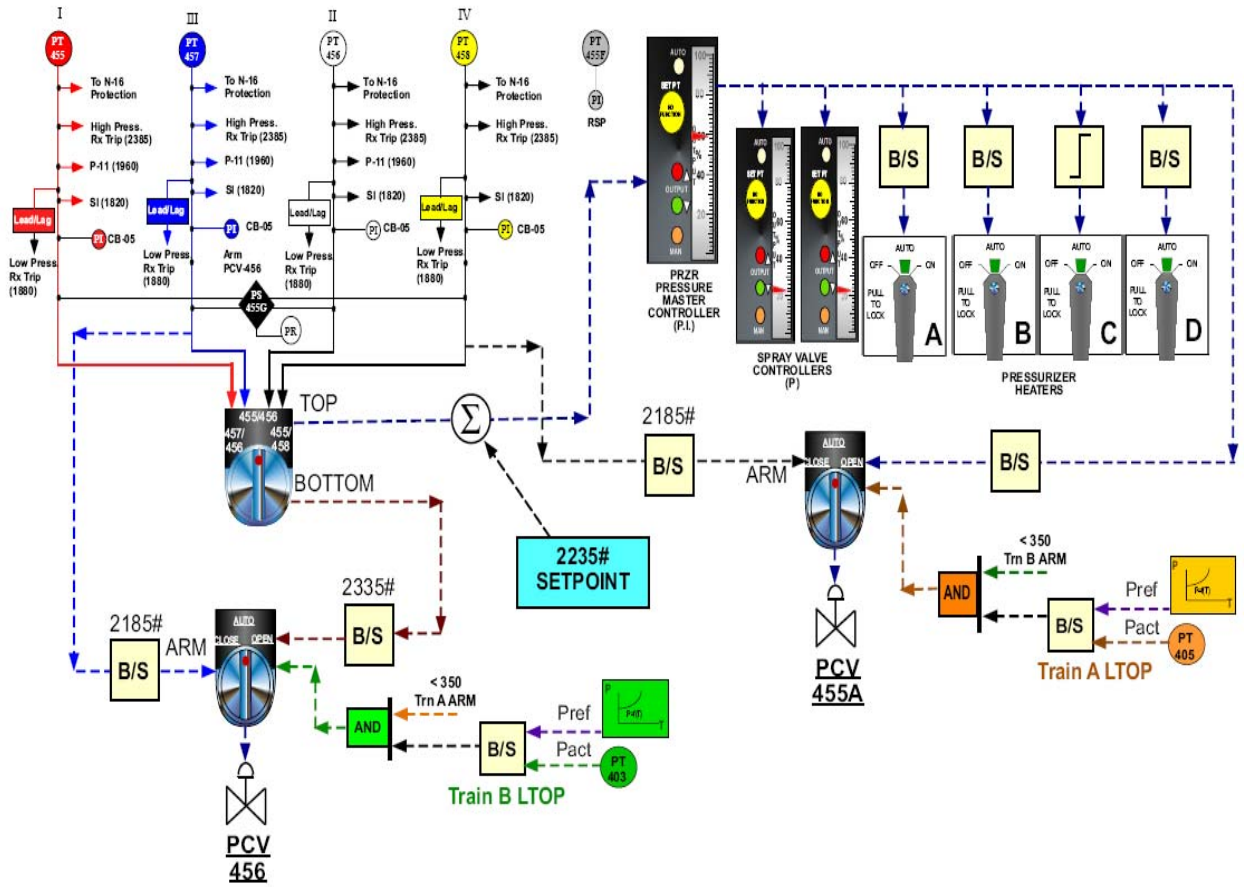
I
III
II
IV
PT 455
PT 457
PT 456
PT 458
PT 455E
To N-16 Protection
High Press. Rx Trip (2385)
P-11 (1960)
SI (1820)
Lead/Lag
CB-05
Low Press. Rx Trip (1880)
Arm PCV-456
PS 455G
PR
RSP
PRZR PRESSURE MASTER CONTROLLER (P.I.)
SPRAY VALVE CONTROLLERS (P)
B/S
AUTO
OFF
ON
PULL TO LOCK
A
B
C
D
PRESSURIZER HEATERS
TOP
BOTTOM
455/456
457/456
455/458
2185#
2335#
ARM
CLOSE
OPEN
2235# SETPOINT
AND
< 350 Trn A ARM
< 350 Trn B ARM
Pref
Pact
PT 403
PT 405
Train B LTOP
Train A LTOP
PCV 456
PCV 455A

2.3 Operator Actions

ACTION/EXPECTED RESPONSE	RESPONSE NOT OBTAINED

NOTE:
- Diamond steps denote initial action.
- A PORV is not considered INOPERABLE when its actuation instrumentation is not functioning.
- Power should NOT be removed from a block valve closed in accordance with this procedure section.

☐	◇1	VERIFY PORV - CLOSED	IF PORV OPEN and RCS Pressure <2335 psig, THEN CLOSE affected PORV AND CLOSE associated block valve.
☐	◇2	PLACE u-PK-455A, PRZR MASTER PRESS CTRL in MANUAL	
☐	◇3	ADJUST u-PK-455A for current RCS pressure	
☐	4	TRANSFER to an alternate controlling channel, if required. 1/u-PS-455F, PRZR PRESS CTRL CHAN SELECT	
☐	5	PLACE u-PK-455A in AUTO	
☐	6	VERIFY automatic control restoring pressurizer pressure to 2235 psig.	RESTORE normal pressure by manual control of heaters and sprays, as necessary.

Examination Outline Cross-Reference	Level	RO	SRO
Rev. Date: 1/7/2015	Tier #	1	n/a
Change: 2	Group #	1	n/a
	K/A #	011 G2.1.27	n/a
Level of Difficulty: 2	Importance Rating	3.9	n/a

Large Break LOCA: Knowledge of system purpose and/or function.

Question 41

During a large break LOCA, when the Containment Spray system heat exchanger outlet valves open, which ONE of the following is correct regarding the addition of chemicals to the fluid stream?

A. Sodium Hydroxide (NaOH) is added in order to minimize Hydrogen production from the corrosion of containment materials.

B. Sodium Hydroxide (NaOH) is added in order to minimize caustic stress corrosion of stainless steel components.

C. Lithium Hydroxide (LiOH) is added in order to minimize Hydrogen production from the corrosion of containment materials.

D. Lithium Hydroxide (LiOH) is added in order to minimize caustic stress corrosion of stainless steel components.

Answer: A

This question matches the KA because it requires knowledge of the chemical added to containment spray and why it is added during a large break LOCA.

Explanation / Plausibility:

A. This is correct. NaOH is added with the containment spray water to increase the pH of the borated water going into the containment atmosphere. By doing so, it reduces corrosion of containment materials (including Cl Stress corrosion) which contributes to H2 production and it also absorbs Iodine from the containment atmosphere.

B. Incorrect. While this is the correct chemical, adding it increase pH and caustic stress occurs at higher pH levels. It is plausible because Cl stress corrosion is one of the listed corrosions that this chemical addition minimizes.

C. Incorrect because LiOH is not added with the containment spray system. It is plausible because LiOH is added to the RCS during normal operation to increase pH. The reason is correct.

D. Incorrect because LiOH is not added with the containment spray system. Plausible (See B & C).

Technical Reference: (Attach if not previously provided including revision number)	Containment Spray Study Guide

Proposed references to be provided to applicants during examination: _____

Learning Objective:	STATE the function of the Containment Spray system. (LO21.SYS.CT1.OB01)

Question Source:	Bank #	
	Modified Bank#	
	New	X
Question History:	Last NRC Exam	
Question Cognitive Level	Memory or Fundamental Knowledge	X
	Comprehension or Analysis	
10 CFR Part 55 Content:	55.41	41.7
	55.43	n/a

CONTAINMENT SPRAY STUDY GUIDE

SYSTEM DESCRIPTION

MAJOR FLOWPATH

STANDBY (FIGURE 2)

During operation in Modes 1-4, the Containment Spray System is aligned in standby readiness to actuate if required. Four pumps (2/train) are aligned to take suction from the RWST via two train related suction valves. The pumps are off with their handswitches maintained in the AUTO position. Heat exchanger outlet valves are in AUTO and closed. The chemical addition tank is isolated by maintaining the motor operated outlet valves closed with their handswitches in AUTO. Chemical addition tank air operated outlet valves are open with their handswitches also in AUTO. The four Containment Spray pump recirculation valves (1/pump) are open due to low pump flow with their hand switches in AUTO.

SAFETY INJECTION (FIGURE 3)

After safety injection actuation, Containment Spray pumps start and run in recirculation. The recirculation flow path starts at the RWST, through the RWST suction valves, each pump, and back to the RWST via the pump related recirculation valve. The recirculation line originates between the pump and heat exchanger thus recirculation flow is not cooled by the heat exchanger. A chemical eductor taps off after the pumps and flow is returned to the suction lines. Although containment spray flows through the eductor, chemical addition tank motor operated outlet valves are closed resulting in no flow from the chemical addition tank.

INJECTION (FIGURE 4)

Once HI-3 containment pressure is reached (≥ 18.2 psig), indicating a need for Containment Spray flow, a P signal is generated and the Containment Spray System is automatically transferred to the injection mode of operation. Water is drawn from the RWST and through the pump. The heat exchanger outlet valve begins to open resulting in water spray into containment. As the heat exchanger outlet valves come off of their closed seats a close signal is sent to the recirculation valves. Flow is then routed through the heat exchanger, (no cooling required) into containment, up the risers, and out the spray nozzles. The chemical additive tank motor operated outlet valves open and the eductor begins pulling the concentrated chemicals from the tank and injecting them into the suction of its associated pump. Once a low level is reached in the chemical addition tank, the chemical addition tank motor operated outlet valves close or, if this fails to happen, a lo-lo level (≤ 5.82%) will close the air operated outlet valves, terminating the chemical injection.

CHEMICAL ADDITION SYSTEM

During the initial stages of an accident, highly borated water is being pumped into the Containment building by various systems. The resulting pH of the sump water could be as low as 4.5. This lower pH enhances chloride stress corrosion of stainless steel components and is not the most conducive to absorb iodine and keep it in solution. Corrosion of other metals in

Containment caused by this lower pH can produce hydrogen which could increase the possibility of a hydrogen burn/explosion, raising containment pressure even further and potentially degrading the containment as a fission product barrier. Controlling pH in the sumps is very important. To raise the pH the chemical addition system injects sodium hydroxide, bringing the sump pH to a range ≥ 7.1.

CHEMICAL ADDITION TANK

A 28-30 weight percent solution of sodium hydroxide is maintained in the Containment Spray chemical addition tank in the event Containment conditions require spray flow. The chemical addition tank is a horizontal tank with a volume of approximately 5400 gal and a usable volume of approximately 5300 gal. Located in the safeguards building 790' elevation, the tank is made of stainless steel. It is situated slightly above the four eductors to allow for gravity flow to the eductors.

SAFETY ANALYSIS OF THE EVENT

The CT System is an Engineered Safety Feature (ESF) system specifically designed to mitigate the consequences of a loss-of-coolant accident (LOCA), a main steam line break or feedwater line break inside the Containment. Also, the CT System is a chemical addition system. The Chemical Addition System is used to raise pH in the containment sumps to a level more conductive to absorption and retention of radioactive iodine. Raising the pH in the sumps also reduces corrosion of components located in Containment following accident condition, which minimizes hydrogen production.

Examination Outline Cross-Reference	Level	RO	SRO
Rev. Date: 1/15/2015	Tier #	1	n/a
Change: 2	Group #	1	n/a
	K/A #	015 AK3.03	n/a
Level of Difficulty: 4	Importance Rating	3.7	n/a

RCP Malfunctions: Knowledge of the reasons for the following responses as they apply to the Reactor Coolant Pump Malfunctions (Loss of RC Flow): Sequence of events for manually tripping reactor and RCP as a result of an RCP malfunction.

Question 42

Unit 1 plant conditions:

- Reactor power = 28%
- RC LOOP 1, 1 OF 3 FLO LO (5A-1.3) in alarm
  - 1-FI-414, RCP LOOP 1 FLO CHAN I indicates decreasing flow
  - 1-FI-415, RCP LOOP 1 FLO CHAN II indicates decreasing flow
  - 1-FI-416, RCP LOOP 1 FLO CHAN III indicates decreasing flow
- Breaker position for RCP 1-01 indicates closed
- RCP 1-01 motor current = approximately 0 amps

Based on the above conditions, which ONE of the following is correct?

1. RCP 1-01 is stopped for pump protection due to a ___(1)___.

2. The reactor is tripped ___(2)___.

A. (1) sheared shaft
(2) to prevent exceeding DNBR limits

B. (1) sheared shaft
(2) because a RCP cannot be started in MODE 1 or 2

C. (1) seized shaft
(2) to prevent exceeding DNBR limits

D. (1) seized shaft
(2) because a RCP cannot be started in MODE 1 or 2

Answer: B

This question matches the KA because it requires knowledge of the sequence of events and reasons for stopping the RCP and tripping the reactor.

Explanation / Plausibility:

A. Incorrect. The RCP is stopped due to a sheared shaft. The reactor is tripped because a RCP cannot be started in MODE 1 or 2.

B. Correct (See A).

C. Incorrect (See A).

D. Incorrect (See A).

Technical Reference: (Attach if not previously provided including revision number)	ABN-101

Proposed references to be provided to applicants during examination: _____

Learning Objective: **ANALYZE** the response to an RCP Trip in accordance with ABN-101, Reactor Coolant Pump Trip/Malfunction. (LO21.ABN.101.OB01)

Question Source:	Bank #	
	Modified Bank#	
	New	X
Question History:	Last NRC Exam	
Question Cognitive Level	Memory or Fundamental Knowledge	
	Comprehension or Analysis	X
10 CFR Part 55 Content:	55.41	41.5, 41.10
	55.43	n/a

2.0 REACTOR COOLANT PUMP TRIP

2.1 Symptoms

a. Annunciators Alarm

- ANY RCP TRIP (5B-1.1)
- 1 OF 4 RCP UNDRVOLT (5B-1.2)
- RC LOOP 1 1 OF 3 FLO LO (5A-1.3)
- 1 OF 4 RCP UNDRFREQ (5B-2.2)
- RC LOOP 2 1 OF 3 FLO LO (5A-2.3)
- RC LOOP 3 1 OF 3 FLO LO (5A-3.3)
- RC LOOP 4 1 OF 3 FLO LO (5A-4.3)

b. Plant Indications

- Low flow indication on any reactor coolant loop.
- Breaker TRIP or MISMATCH light illuminated on any RCP handswitch.
- Motor amps on any RCP motor reading zero.

2.2 Automatic Actions

- Reactor trip occurs in the event of one reactor coolant pump trip with reactor power greater than 48% (P-8 permissive annunciator NOT LIT).
- Reactor trip occurs in the event of two reactor coolant pumps trip with reactor power or turbine power greater than 10% (P-7 permissive annunciator NOT LIT).

2.3 Operator Actions

ACTION/EXPECTED RESPONSE	RESPONSE NOT OBTAINED

[C]
CAUTION: A Reactor Coolant Pump shall NOT be started with the reactor in MODE 1 or 2.

NOTE:
- Diamond step 1 denotes Initial Operator Actions.
- With a Reactor Coolant Pump stopped, the affected loop will stop steaming.

◇1 Check Plant status

☐ a. Verify Reactor - Tripped	a. Perform the Following:	
☐ b. GO TO EOP-0.0A/B while other qualified operators continue with this procedure.	1) Trip Reactor AND GO TO EOP-0.0A/B while other qualified operators continue with this procedure.	
	2) GO TO Step 2.	

Examination Outline Cross-Reference	Level	RO	SRO
Rev. Date: 12/3	Tier #	1	n/a
Change: 1	Group #	1	n/a
	K/A #	022 AK1.01	n/a
Level of Difficulty: 3	Importance Rating	2.8	n/a

Loss of Rx Coolant Makeup: Knowledge of the operational implications of the following concepts as they apply to Loss of Reactor Coolant Makeup: Consequences of thermal shock to RCP seals.

Question 43

Unit 1 initial plant conditions:

- Reactor power = 100%
- ANY RCP SEAL WTR INJ FLO LO (5A-1.6) is in alarm
- RCP SEAL WTR INJ FILT 1 ΔP HI (5A-2.6) is in alarm
- Seal injection flow = 0 gpm
- ABN-101, REACTOR COOLANT PUMP TRIP/MALFUNCTION has been initiated
- CCW Thermal Barrier heat exchanger flow indicates 30 gpm

Based on the above plant conditions, complete the following statements;

1. RCPs ____(1)____ required to be tripped.

2. Seal injection is restored slowly to RCP seals in order to prevent thermal shock to the seals which could result in ____(2)____.

   A. (1) are
      (2) excessive RCS leakage

   B. (1) are
      (2) RCP seizure / sheared RCP shaft

   C. (1) are NOT
      (2) excessive RCS leakage

   D. (1) are NOT
      (2) RCP seizure / sheared RCP shaft

Answer: A

This question matches the KA by requiring knowledge of the consequences of thermal shock to the RCP seals.

Explanation / Plausibility:

A. 1st part is correct. Per ABN-101, Section 7 (Loss of Seal Injection), if CCW is less than 35 gpm, you are direction to section 9 which will direct tripping the reactor, RCPs and isolating seal injection to the RCPs. 2nd part is correct. Thermal shocking the seals could result in seal damage (not seating correctly) which could result in excessive leakage.

B. 1st part is correct. 2nd part is incorrect because the concern is with thermal shocking the RCP seals, ultimately resulting in excessive leakage. It is plausible because there will be damage to the surfaces of the seals and some binding of the RCP rotating components.

C. 1st part is incorrect because the RCPs are required to be tripped if CCW flow is < 35 gpm. It is plausible because if flow were 6 gpm higher, it would be correct. . 2nd part is correct.

D. 1st part is incorrect but plausible (see C). 2nd part is incorrect but plausible (see B).

Technical Reference: (Attach if not previously provided including revision number)	ABN-101 Reactor Coolant Pump Malfunction

Proposed references to be provided to applicants during examination: _____

Learning Objective: **DISCUSS** the response for a Loss of Seal Injection in accordance with ABN-101, Reactor Coolant Pump Trip/Malfunction. (LO21.ABN.101.OB07)

Question Source:	Bank #	
	Modified Bank#	
	New	X
Question History:	Last NRC Exam	
Question Cognitive Level	Memory or Fundamental Knowledge	
	Comprehension or Analysis	X
10 CFR Part 55 Content:	55.41	41.8
	55.43	n/a

ABN-101, "Reactor Coolant Pump Trip/Malfunction"

ABN-101 describes operator actions necessary for various abnormal RCP conditions:

RCP trip - Trip of the RCP may cause a reactor trip, depending on reactor power (> 48% P-8 permissive). The initial operator action is to verify the reactor tripped, or trip the reactor if it is not tripped. When RCP 1 or 4 trips the operator should close the affected PRZR spray valve to prevent backflow through the idle loop spray line. The operator should also remember that the affected SG will stop steaming, which causes SG level to increase if feedwater flow is not stopped.

Hi/Low lube oil level - operator should monitor pump parameters. If the bearing temperatures reach 195°F, then the reactor and the affected RCP should be tripped.

#1 seal failure - This section is divided up into four different scenarios. If #1 seal leakoff flow on affected RCP is greater than 6.0 gpm with temperatures increasing or total seal leakoff flow exceeds 8 gpm, then the reactor and the affected RCP should be tripped immediately, and the leakoff valve closed when the RCP has stopped rotating (3-5 minutes). If greater than 6.0 gpm and temperatures are stable, then the unit must be shutdown within 8 hours. If the #1seal leakoff is less than .8 gpm, then the unit must be shutdown within 8 hours. If the RCP radial bearing or seal inlet temperature increases, then the reactor and the pump should be tripped immediately, and the #1 seal leakoff valve closed after the RCP has stopped rotating.

#2 or #3 seal failure - Pump operation is allowed to continue as long as other pump parameters (vibration, temperatures, etc.) stay within normal bands.

Excessive RCP vibration - A vibration of 20 mil shaft or 5 mil frame, or increase of ≥1 mil/hr on the shaft when ≥15 mils, or increase ≥0.2 mil/hr on the frame when ≥3 mils requires immediate tripping of the reactor and the RCP. Vibration ≥15 mil shaft or 3 mil frame requires consulting management and engineering to determine if the unit is to be shutdown and the affected pump stopped.

Loss of seal injection - The operator verifies CCW flow to the thermal barrier heat exchanger, since this is required to cool the pump radial bearing and seal package. Other actions require a check of other parameters on the affected pump. If the pump radial bearing temperature increases to 225°F or seal inlet temperature increases to 235°F, then the reactor and the affected RCP should be tripped.

RCP high temperature or loss of CCW to any RCP - The operators verify that satisfactory seal injection flow is being supplied to the RCP. Temperatures for the pump and motor bearing and motor windings are monitored. If these temperatures exceed maximum limits, then the reactor is tripped and the pump is stopped.

RCP temperature limits are as follows:

Motor stator winding temperature - 300°F
Motor upper radial bearing temperature - 195°F
Motor upper thrust bearing temperature - 195°F
Motor lower radial bearing temperature - 195°F
Motor lower thrust bearing temperature - 195°F
Lower seal water (pump radial) bearing temperature - 225°F

Loss of seal injection and thermal barrier cooling water - With no seal injection flow and no thermal barrier cooling the affected RCP must be secured within one minute. The reactor is tripped and the affected pump(s) stopped. Seal injection and thermal barrier cooling return valves are closed. Isolating the RCP seal package from seal injection prevents the thermal shock that would be encountered by restoring seal injection to an abnormally hot RCP seal. RCS leakage is monitored and a cooldown to mode 5 is initiated.

7.0 LOSS OF SEAL INJECTION

7.1 Symptoms

a. Annunciator Alarms

- ANY RCP SEAL WTR INJ FLO LO (5A-1.6)
- ANY CHRG PMP OVERLOAD/TRIP (6A-1.7)

b. Plant Indications

- Amber MISMATCH or trip light(s) ON at the charging pump control switch(es)
- Increased seal inlet temperature
- Charging flow indicating 0.0 gpm
- Increased radial bearing temperature

7.2 Automatic Actions

NOTE: Closure of u-HS-4709 or u-HS-4696 isolates CCW return from ALL RCPs.

a. High thermal barrier cooler CCW return temperature (182.5°F) will cause the following:

1) Auto closure of thermal Barrier Cooler CCW Return Valve for affected pump(s):

- u-HS-4691 RCP 1 THBR CLR CCW RET VLV
- u-HS-4692 RCP 2 THBR CLR CCW RET VLV
- u-HS-4693 RCP 3 THBR CLR CCW RET VLV
- u-HS-4694 RCP 4 THBR CLR CCW RET VLV

2) Auto closure of u-HS-4709, THBR CLR CCW RET ISOL VLV (ORC)

b. High thermal barrier CCW return flow will cause auto closure of u-HS-4696, THBR CLR CCW RET ISOL VLV (IRC).

7.3 Operator Actions

ACTION/EXPECTED RESPONSE	RESPONSE NOT OBTAINED

CAUTION: With NO Seal Injection flow AND NO Thermal Barrier cooling the affected RCP must be secured within ONE minute.

☐	1 VERIFY CCW flow to RCP Thermal Barrier Coolers -GREATER THAN OR EQUAL TO 35 GPM: • u-FI-4678, RCP 1 THBR CLR CCW RET FLO • u-FI-4682, RCP 2 THBR CLR CCW RET FLO • u-FI-4686, RCP 3 THBR CLR CCW RET FLO • u-FI-4690, RCP 4 THBR CLR CCW RET FLO	GO TO Section 9.0 this procedure.

NOTE: IF NO charging pumps available, THEN Plant Management should be notified prior to shutdown due to NO boration path.

☐	2 VERIFY at least one Charging Pump - RUNNING • 1/u - APCH 1, CCP 1 • 1/u - APCH 2, CCP 2 • 1/u - APPD, PDP	PERFORM the following: a. ISOLATE Letdown Flow: • 1/u-8149A, LTDN ORIFICE ISOL VLV (45 GPM) • 1/u-8149B, LTDN ORIFICE ISOL VLV (75 GPM) • 1/u-8149C, LTDN ORIFICE ISOL VLV (75 GPM) • 1/u-LCV-459,LTDN ISOL VLV • 1/u-LCV-460,LTDN ISOL VLV b. START a Charging Pump. IF a Charging Pump can NOT be started, THEN GO TO step 4.

9.0 LOSS OF SEAL INJECTION AND THERMAL BARRIER COOLING WATER

9.1 Symptoms

a. Annunciator Alarms

- ANY RCP THBR CLR CCW RET TEMP HI (3B-2.11)
- ANY RCP MOTOR CLR CCW RET FLO LO (3B-2.12)
- ANY RCP THBR CLR CCW RET FLO LO (3B-3.11)
- ANY RCP UP BRG L\O CLR CCW RET FLO LO (3B-3.12)
- ANY RCP LOW BRG L\O CLR CCW RET FLO LO (3B-4.12)
- ANY RCP 1 SEAL LKOFF FLO HI (5A-1.2)
- ANY RCP SEAL WTR INJ FLO LO (5A-1.6)

b. Plant Indications

- Computer alarms on RCP bearing temperatures.
- Computer alarm on RCP motor winding temperatures.
- Possible increase in RCP vibration.
- Increased Number 1 seal leakoff flow or temperature.
- Increased radial bearing temperature.

9.2 Automatic Actions

a. High thermal barrier CCW return temperature (182.5°F) will cause the following:

1) Auto closure of THBR CLR CCW RET VLV for affected pump(s)

- u-HS-4691 RCP 1 THBR CLR CCW RET VLV
- u-HS-4692 RCP 2 THBR CLR CCW RET VLV
- u-HS-4693 RCP 3 THBR CLR CCW RET VLV
- u-HS-4694 RCP 4 THBR CLR CCW RET VLV

NOTE: Closure of u-HS-4709 or u-HS-4696 isolates CCW return from ALL RCPs.

2) Auto closure of u-HS-4709, THBR CLR CCW RET ORC ISOL VLV

b. High thermal barrier CCW return flow will cause auto closure of u-HS-4696, THBR CLR CCW RET ISOL VLV (IRC).

9.3 Operator Actions

ACTION/EXPECTED RESPONSE	RESPONSE NOT OBTAINED

CAUTION: With NO Seal Injection flow AND NO Thermal Barrier cooling the affected RCP must be secured within ONE minute.

☐ 1 TRIP the Reactor AND GO TO EOP-0.0A/B while other operators CONTINUE this procedure.

NOTE: IF all RCPs are stopped during the performance of this procedure, THEN Attachment 3 should be PERFORMED to isolate dilution paths when time permits.

[C]
☐ 2 STOP affected RCP(s).

- 1/u-PCPX1, RCP 1
- 1/u-PCPX2, RCP 2
- 1/u-PCPX3, RCP 3
- 1/u-PCPX4, RCP 4

☐ 3 VERIFY the number 1 Seal Leakoff Valve for affected RCP(s) - OPEN

- 1/u-8141A, RCP 1 SEAL 1 LKOFF VLV
- 1/u-8141B, RCP 2 SEAL 1 LKOFF VLV
- 1/u-8141C, RCP 3 SEAL 1 LKOFF VLV
- 1/u-8141D, RCP 4 SEAL 1 LKOFF VLV

☐ 4 CLOSE the Seal Injection Isolation Valve to affected RCP(s).

[C]
- 1/u-8351A, RCP 1 SEAL WTR INJ VLV
- 1/u-8351B, RCP 2 SEAL WTR INJ VLV
- 1/u-8351C, RCP 3 SEAL WTR INJ VLV
- 1/u-8351D, RCP 4 SEAL WTR INJ VLV

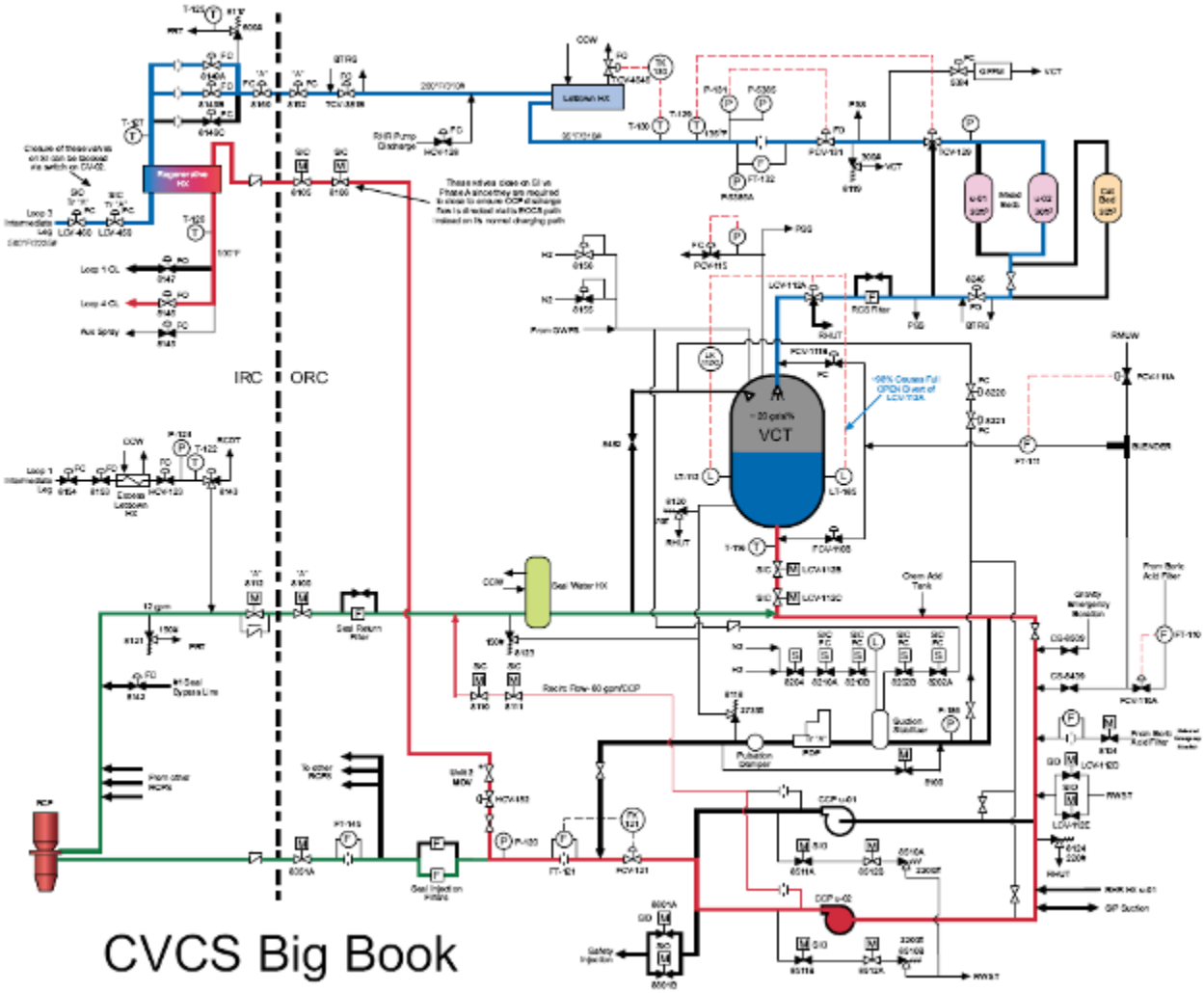

CVCS Big Book

Examination Outline Cross-Reference	Level	RO	SRO
Rev. Date: 1/7/2015	Tier #	1	n/a
Change: 2	Group #	1	n/a
	K/A #	026 AA1.07	n/a
Level of Difficulty: 3	Importance Rating	2.9	n/a

Loss of Component Cooling Water: Ability to operate and / or monitor the following as they apply to the Loss of Component Cooling Water: Flow rates to the components and systems that are serviced by the CCWS; interactions among the components

Question 44

Unit 1 plant conditions:

- Reactor power = 50%
- The thermal barrier for RCP 1 develops a leak

Based on the above conditions, complete the following statements:

1. The lowest thermal barrier return flow rate which will cause a CCW isolation from the RCP(s) is ____(1)____.

2. When the isolation setpoint is reached, ____(2)____.

   A. (1) 60 gpm
      (2) the individual pump isolation valve and the outside containment isolation valve will close

   B. (1) 60 gpm
      (2) ONLY the inside containment isolation valve will close

   C. (1) 70 gpm
      (2) the individual pump isolation valve and the outside containment isolation valve will close

   D. (1) 70 gpm
      (2) ONLY the inside containment isolation valve will close

Answer: D

This question matches the KA by requiring knowledge of CCW flow rates from the RCPs that initiate protective actions.

Explanation / Plausibility:

A. 1st part is incorrect because the setpoint is 64 gpm. It is plausible because it is abnormally high return flow. 2nd part is incorrect because the inside containment isolation valve closes on high flow. It is plausible because if the isolation were due to high temperature, it would be correct.

B. 1st part is incorrect but plausible (see A). 2nd part is correct.

C. 1st part is correct. 2nd part is incorrect but plausible (see A).

D. 1st part is correct. 2nd part is correct.

Technical Reference: (Attach if not previously provided including revision number)	1-ALB-3B Component Cooling Water Study Guide

Proposed references to be provided to applicants during examination: _____

Learning Objective: DESCRIBE the components of the Component Cooling Water system including interrelations with other systems to include interlocks and control loops. (LO21.SYS.CC1.OB03)

Question Source:	Bank #	
	Modified Bank#	
	New	X
Question History:	Last NRC Exam	
Question Cognitive Level	Memory or Fundamental Knowledge	
	Comprehension or Analysis	X
10 CFR Part 55 Content:	55.41	41.7
	55.43	n/a

Component Cooling Water Study Guide

Reactor Coolant Pumps

The CCW for the reactor coolant pumps enters containment via a common line that has two motor operated gate valves in series for isolation. Inside containment the line branches into a separate line for each reactor coolant pump (RCP). At the pump, the line is further divided into separate lines for the motor air cooler, upper bearing lube oil cooler, thermal barrier cooler and lower bearing lube oil cooler.

The flow paths to the motor air coolers, upper bearing lube oil and lower bearing lube oil coolers are manually aligned using gate valves as the inlet isolations and globe valves as the outlet isolations. The outlet isolations are used as the throttle valves to set the required flow for the individual flow path. All the valves are located inside containment in the vicinity of the respective pump.

The thermal barrier flow is manually aligned on the inlet side. The return of each thermal barrier has a motor operated globe valve as the outlet isolation. The outlet valve is controlled from u-CB-03 via individual handswitches. There is open/close indication for each of the valves on their handswitch.

The supply isolations, u-HV-4699 and u-HV-4700, are controlled from u-CB-03 using individual handswitches. After transferring control, u-HV-4699 can also be operated from the HSP. There is open/close indication at the handswitch. There is also indication for u-HV-4699 on monitor light box u-MLB- 4A3. Valve u-HV-4700 has indication on u-MLB-4B3 and u-MLB-63. The MLB indication lights are on when the valves are closed and off when the valves are open. The valves get a closed signal from a containment isolation phase B signal. (The phase B signal is generated with a containment spray signal.) Power to the valves is from 1E 480v MCCs with control power supplied from a 480V to 120V transformer in each valve's breaker compartment.

The flow from the motor air cooler, the upper bearing lube oil cooler and the lower bearing lube oil cooler from all four RCPs is joined together inside containment with one return line penetrating the containment wall. This line is isolated using motor operated gate valves, with one valve inside containment and the other outside containment. The inside containment valve is u-HV-4701 and the outside containment valve is u-HV-4708. Both valves are controlled by individual handswitches on u-CB-03 with open/close indication on the handswitch. After transferring control, u-HV-4701 can also be operated from the HSP. There is indication for u-HV-4701 on monitor light box u-MLB- 4A3 also. Valve u-HV-4708 has indication on u-MLB-4B3 and u-MLB-63. The MLB indication lights are on when the valves are closed and off when the valves are open. The valves get a closed signal from a containment isolation phase B signal. Power to the valves is from 1E 480v MCCs with control power supplied from a 480V to 120V transformer in each valve's breaker compartment.

Return flow from the thermal barriers of all four RCPs are joined together inside containment and have one return line penetrating the containment wall. This line is isolated using motor operated gate valves, with one valve inside containment and the other outside containment. The inside containment valve is u-HV-4696 and the outside containment valve is u-HV-4709. Both valves are controlled by individual handswitches on u-CB-03 with open/close indication on the handswitch. There is also indication for u-HV-4696 on monitor light box u-MLB- 4A3. Valve u-HV-4709 has indication on u-MLB-4B3. The MLB

indication lights are on when the valves are closed and off when the valves are open. The valves get a closed signal from a containment isolation phase B signal. Power to the valves is from 1E 480v MCCs with control power supplied from a 480V to 120V transformer in each valve's breaker compartment.

The return piping from the thermal barriers is rated for reactor coolant system pressure and temperature up to the outside containment isolation valve, u-HV-4709. This is to protect the piping in the event of a thermal barrier leak. The CCW system is further protected from the high temperature and pressure that could result from a thermal barrier leak by automatic close features.

In the event of a thermal barrier leak, when the CCW return temperature reaches 182.5°F, the individual pump isolation valve, u-HV-4691, u-HV-4692, u-HV-4693 or u-HV-4694, will close and u-HV-4709, the outside containment isolation, will close. Closing u-HV-4709 will isolate the return flow from all the RCPs until it can be reopened. The piping at the pump is protected by a relief valve that will open at 2500 psig and relieve to the CCW drain header in containment. Power to the valves is from 1E 480v MCCs with control power supplied from a 480V to 120V transformer in each valve's breaker compartment.

The CCW system is further protected by a flow isolation signal. If return flow from any RCP thermal barrier reaches 64 gpm, the inside containment isolation valve, u-HV-4696, will auto close. This will also isolate the return from all the RCPs until it can be reopened.

A temperature element is located on the outlet of each component of the RCPs. This element inputs to indication in the control room and on the plant computer for the individual component on each pump.

There are alarms on u-ALB-03B for high return temperature from any RCP for each component. The alarm for the motor coolers and the lube oil coolers is a common alarm. The indication in the control room or the plant computer would be used to determine the affected RCP and which component had the high temperature. The thermal barrier alarm is common to all pumps, and the affected pump would be determined using control room or the plant computer indication.

There are flow elements on the outlet of each component of the RCPs. The flow elements input to flow indicators in the control room and on the plant computer for each component on each pump. There is also local flow indication for the return from the motor coolers, upper bearing lube oil coolers and lower bearing lube oil coolers for each pump.

There are alarms on u-ALB-03B for low return flow from any RCP for each component. There is also a high return flow alarm for the thermal barriers. The indication in the control room or the plant computer would be used to determine the affected RCP.

COMPONENT COOLING WATER

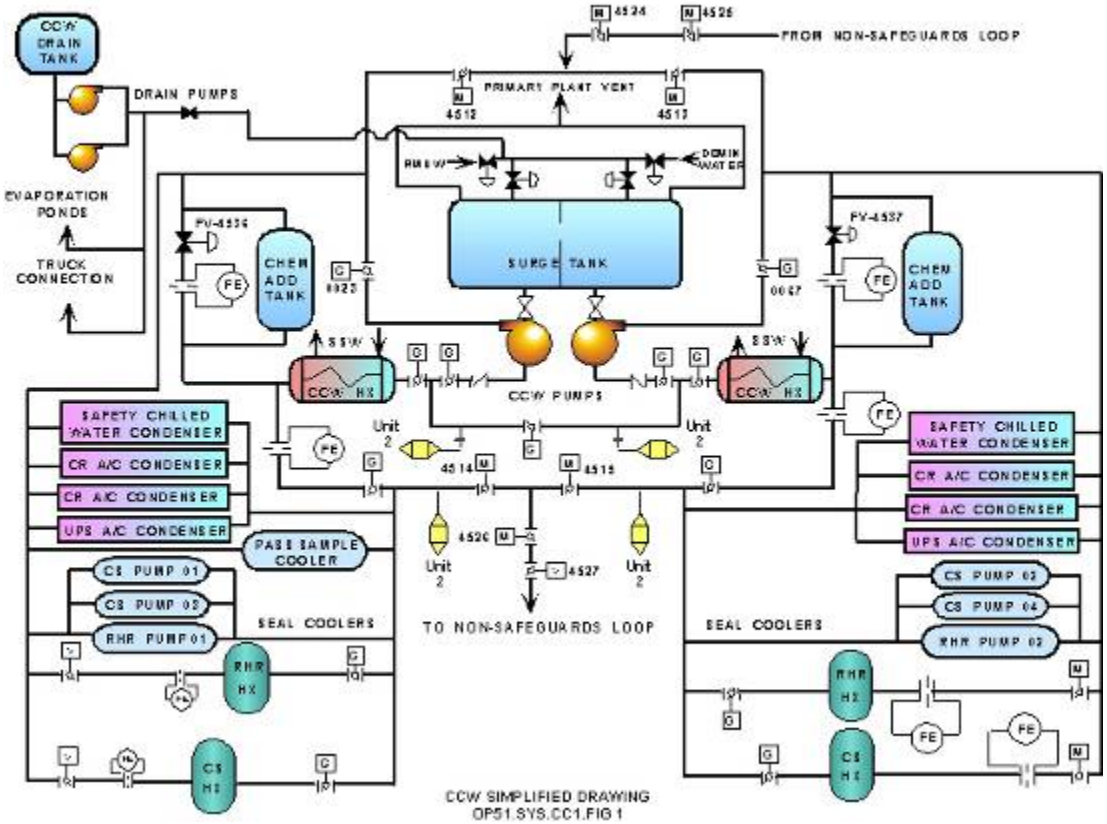

CCW SIMPLIFIED DRAWING
OP51.SYS.CC1.FIG 1

NON SAFEGUARDS LOOP

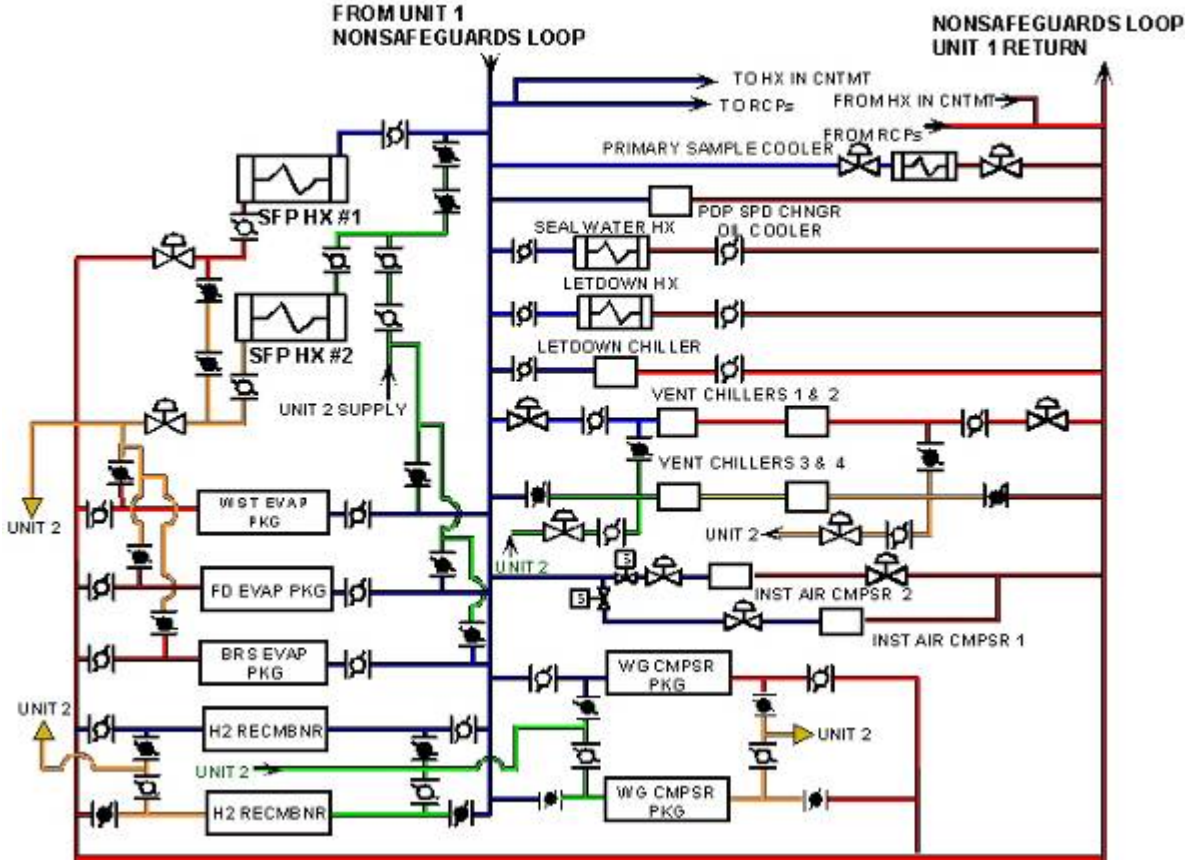

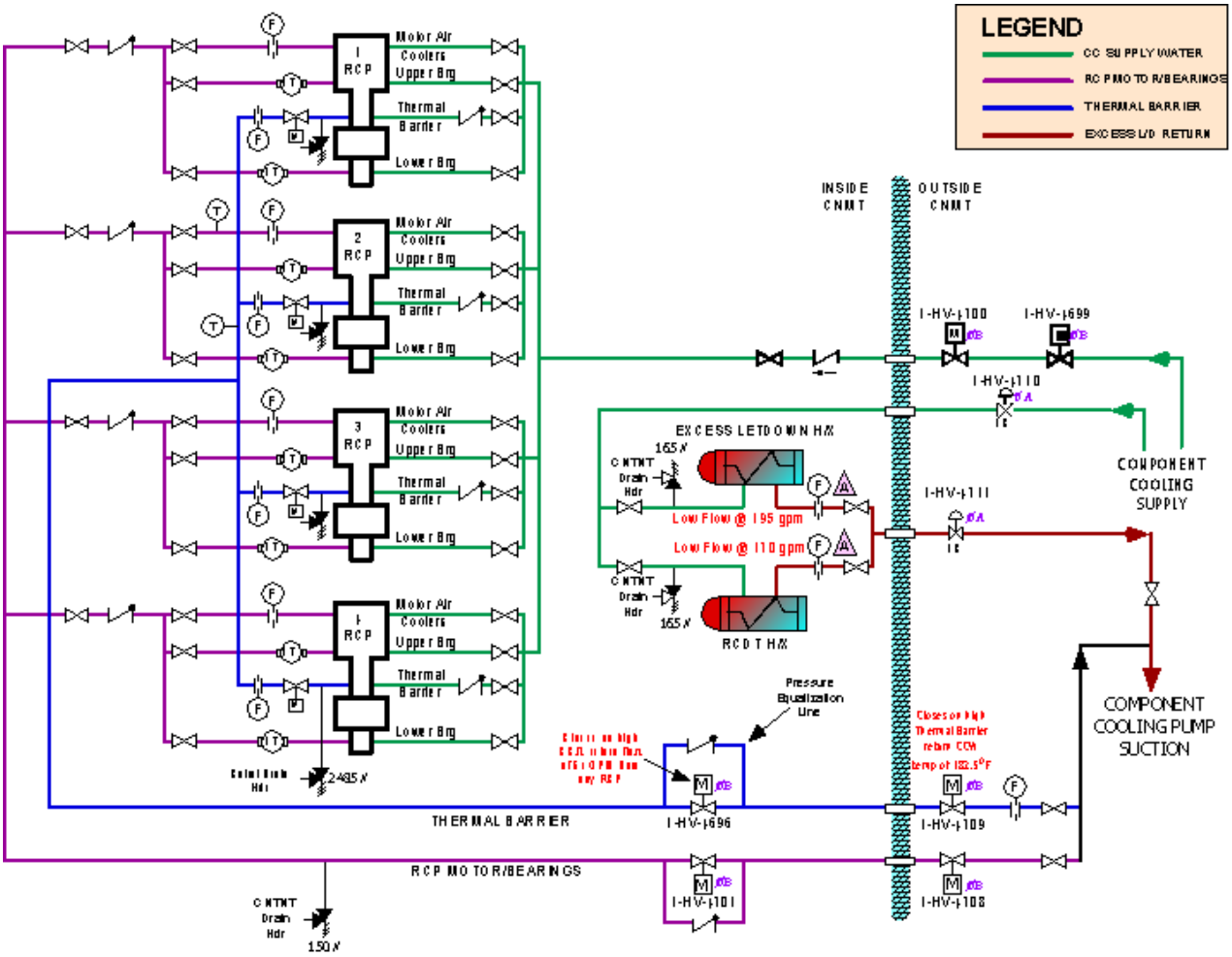
LEGEND
CC SUPPLY WATER
RCP MOTOR/BEARINGS
THERMAL BARRIER
EXCESS L/D RETURN
INSIDE CNMT
OUTSIDE CNMT
1 RCP
2 RCP
3 RCP
4 RCP
Motor Air Coolers
Upper Brg
Thermal Barrier
Lower Brg
I-HV-1100
I-HV-1699
I-HV-1110
EXCESS LETDOWN HX
165 N
CNMT Drain Hdr
Low Flow @ 195 gpm
Low Flow @ 110 gpm
RCDT HX
I-HV-1111
COMPONENT COOLING SUPPLY
COMPONENT COOLING PUMP SUCTION
Pressure Equalization Line
Closes on High Thermal Barrier return CCW temp of 122.5°F
2485 N
THERMAL BARRIER
I-HV-1696
I-HV-1109
RCP MOTOR/BEARINGS
I-HV-1101
I-HV-1108
CNMT Drain Hdr
150 N

ANNUNCIATOR NO.: 4.11

LOGIC:

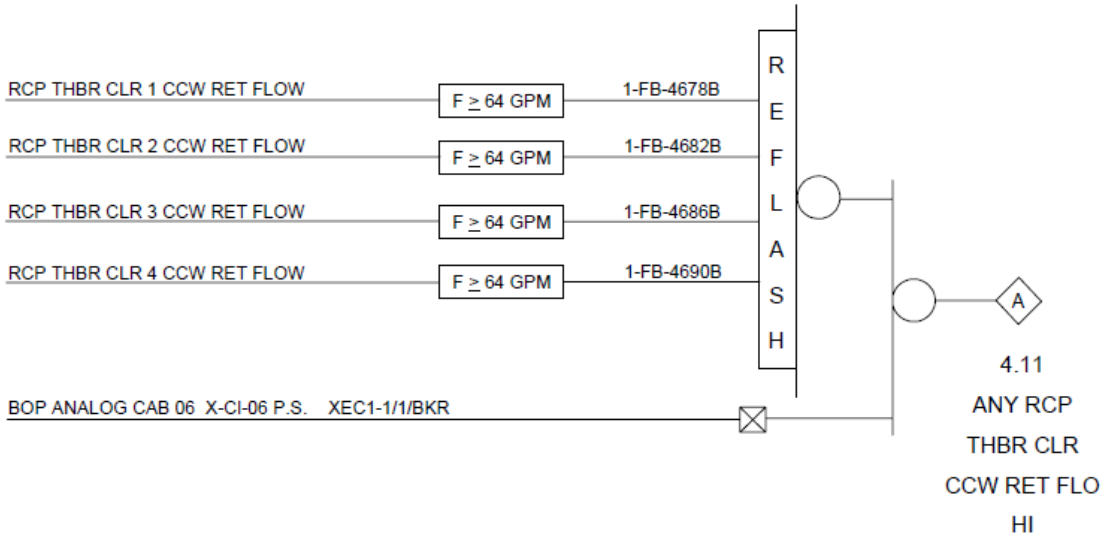

Examination Outline Cross-Reference	Level	RO	SRO
Rev. Date: 1/15/2015	Tier #	1	n/a
Change: 3	Group #	1	n/a
	K/A #	027 AK3.03	n/a
Level of Difficulty: 3	Importance Rating	3.7	n/a

Pressurizer Pressure Control System Malfunction: Knowledge of the reasons for the following responses as they apply to the Pressurizer Pressure Control Malfunctions: Actions contained in EOP for PZR PCS malfunction:

Question 45

Unit 1 plant conditions:

- Reactor power = 100%
- RC LOOP 1 PRZR SPR VLV CTRL 1-PK-455 B indicates 100% demand
- RCS pressure = 2200 psig decreasing rapidly
- After failed attempts to manually close the valve, the reactor is tripped
- EOP-0.0A REACTOR TRIP OR SAFETY INJECTION is initiated

Current plant conditions:

- EOP-0.0A step 10 RNO directs stopping RCPs as necessary to stop spray flow.
- RCP 1-01 is stopped
- RCS pressure = 2000 psig decreasing

Based on the above conditions, which ONE of the following is correct concerning the next RCP to be stopped?

A. RCP 1-04 will be stopped next because it supplies 1-PCV-455B as well as 1-PCV-455C.

B. RCP 1-04 will be stopped next because the physical arrangement of the cold legs with the reactor vessel allows RCP 1-04 discharge to backflow into the RCP 1-01 discharge line.

C. RCP 1-02 will be stopped next because the physical arrangement of the cold legs with the reactor vessel allows RCP 1-02 discharge to backflow into the RCP 1-01 discharge line.

D. RCP 1-02 will be stopped next because it will reduce PRZR spray through the Loop 1 Spray Valve without having an adverse effect on PRZR level because the PRZR surge line is not on Loop 2.

Answer: B

This question matches the KA by requiring knowledge of the reasons for the sequence of securing RCPs for a stuck open spray valve. While not given a sequence in the EOP step itself. the table in the bases for that step states that with RCP 4 operating, it will provide spray flow through both spray valves. The only combination of RCPs in which it doesn't state that flow through spray valve 1 is RCPs 2 & 3.

Explanation / Plausibility:

A. Incorrect because RCP 4 does not directly supply the loop 1 spray valve. It is plausible because the two spray valves are in parallel and the bases does state that RCP 4 will supply spray through both spray valves.

B. This is correct. While the two spray valves are in parallel, they are completely separate upstream of the valves. The only viable reason (flow path) for this flow is for coolant from Loop 4 to backflow into the loop 1 Tc line and the loop 1 spray line.

C. Incorrect because the bases states that spray <u>will</u> flow through loop 1 spray valve with RCP 4 operating. It is plausible because Loop 2 return to the reactor vessel is in close proximity to Loop 1.

D. Incorrect because the bases states that spray will flow through Loop 1 spray valve with RCP 4 operating. It is plausible because the surge line is on Loop 4, not on Loop 2.

Technical Reference: (Attach if not previously provided including revision number)	EOP 0.0A
	Reactor Coolant System Study Guide
	LO21.SYS.RC1

Proposed references to be provided to applicants during examination: _____

Learning Objective: **DISCUSS** EOP-0.0, Reactor Trip or Safety Injection including the Purpose, Applicability, Symptoms/Entry Conditions, Operator Actions, Bases, Foldout Pages and Attachments. (LO21.ERG.E0A.OB07).

Question Source:	Bank #		
	Modified Bank#		
	New	X	
Question History:	Last NRC Exam		
Question Cognitive Level	Memory or Fundamental Knowledge		X
	Comprehension or Analysis		
10 CFR Part 55 Content:	55.41	41.5, 41.10	
	55.43	n/a	

Spray Valves

The two pressurizer spray valves modulate to control pressurizer spray flow. The valves are arranged in parallel so that u-PCV-0455B provides spray flow from RCS loop 1 cold leg, and u-PCV-0455C provides spray flow from RCS loop 4 cold leg. Each has a flow capacity of 450 gpm. The spray valves are 4" air-operated ball valves. They fail closed on a loss of air or power.

Spray valves are positioned by manual/auto (M/A) station controllers on Main Control Board panel u-CB-05. u-PK-455B controls spray from loop 1 and u-PK-455C controls spray from loop 4. The controllers are driven by the master pressure controller and position the spray valves directly proportional to their output. Red and green lights on u-CB-05 above the controllers indicate spray valve position.

Flow through the spray line is caused by differential pressure across the reactor vessel, and is assisted by scoops that extend into the cold leg piping. The scoops utilize the velocity-head of the water downstream of the reactor coolant pumps (RCPs) to help drive spray flow.

Manual bypass valves allow approximately 1 gpm of flow to the spray line and spray nozzle when the spray valves are closed. Bypass flow is throttled to maintain temperature downstream of the spray valve at 530°F - 535°F per TDM-901A/B. Loss of flow would cause the spray line temperature to approach ambient conditions. This means the spray line would be cooler than normal, while the spray nozzle (in the PRZR) would be warmer than normal. Subsequent spray actuation would then cause severe thermal shock to both. Bypass spray also keeps the chemistry and boron concentration of the PRZR liquid in equilibrium with the rest of the RCS by continual mixing.

Auxiliary spray flow is available from the Chemical and Volume Control System through valve u-8145 to the spray line. This directs charging pump discharge flow to the spray line. Auxiliary spray permits depressurizing and cooling the pressurizer when RCPs are not running. The auxiliary spray valve is operated by a 2-position maintained (CLOSE - OPEN) handswitch on u-CB-05. Procedural limitations apply to the use of auxiliary spray in order to reduce the risk of thermal shock to the spray line and nozzle.

STEP	ACTION/EXPECTED RESPONSE	RESPONSE NOT OBTAINED
10	Check PRZR Valve Status:	
	a. PRZR Safeties - CLOSED	a. Go to EOP-1.0A, LOSS OF REACTOR OR SECONDARY COOLANT, Step 1.
	b. Normal PRZR spray valves - CLOSED	b. IF PRZR pressure less than 2235 psig, THEN manually close valve(s) as necessary. IF valve(s) can NOT be closed, THEN stop RCP(s) as necessary to stop spray flow.
	c. PORVs - CLOSED	c. IF PRZR pressure less than PORV open setpoint (2335 psig OR PORV LTOP Setpoint), THEN manually close PORV(s). IF any valve can NOT be closed, THEN manually close its block valve. IF block valve can NOT be closed, THEN go to EOP-1.0A, LOSS OF REACTOR OR SECONDARY COOLANT, Step 1.
	d. Power to at least one block valve - AVAILABLE	d. Go to Step 11.
	e. Block valves - AT LEAST ONE OPEN	e. Open one block valve unless it was closed to isolate an open PORV.

BASES

If RCP 4 (loop with PRZR surge line) can be started, then it alone should be sufficient to provide normal PRZR spray. However, if RCP 4 is unavailable, it will likely be necessary to start more than one RCP to provide normal PRZR spray. Analysis performed for RCP operation and spray flow results provides the following conclusions (Reference RCP TRIP/RESTART in the Generic Issues section of the Executive Volume) (See Table 1). Spray flow with any combination of RCPs operating will be more effective with a high PRZR level. Additionally, operating experience has shown that RCP vibration may be higher than normal when only one RCP is running, and that vibration is reduced when a second RCP is started.

TABLE 1

RCP(s) Running	Is Spray Flow Produced?	
	Spray Valve Loop 1 OPEN	Spray Valve Loop 4 OPEN
4	YES	YES
1	YES (1)	NO
1 AND 2 AND 3	YES	YES
1 AND 2	YES	MAYBE (1)
1 AND 3	YES	MAYBE (1)
2 AND 3	MAYBE (1)	MAYBE (1)

(1) Small amount of spray flow is produced when PRZR level is high (e.g., 90%)

Pressurizer Pressure and Level Control Study Guide

ACTION	OUTPUT %	ERROR SIGNAL	NOMINAL VALUE
PORV opens	81.3	+100 psig	2335 psig
PORV closes	75.0	+80 psig	2315 psig
Spray valves fully open	73.4	+75 psig	2310 psig
Spray valves start to open	57.8	+25 psig	2260 psig
Variable heaters off	54.7	+15 psig	2250 psig
Normal operating pressure	50.0	- 0 -	2235 psig
Variable heaters fully on	45.3	–15 psig	2220 psig
Backup heaters off	44.7	–17 psig	2218 psig
Backup heaters on	42.2	–25 psig	2210 psig

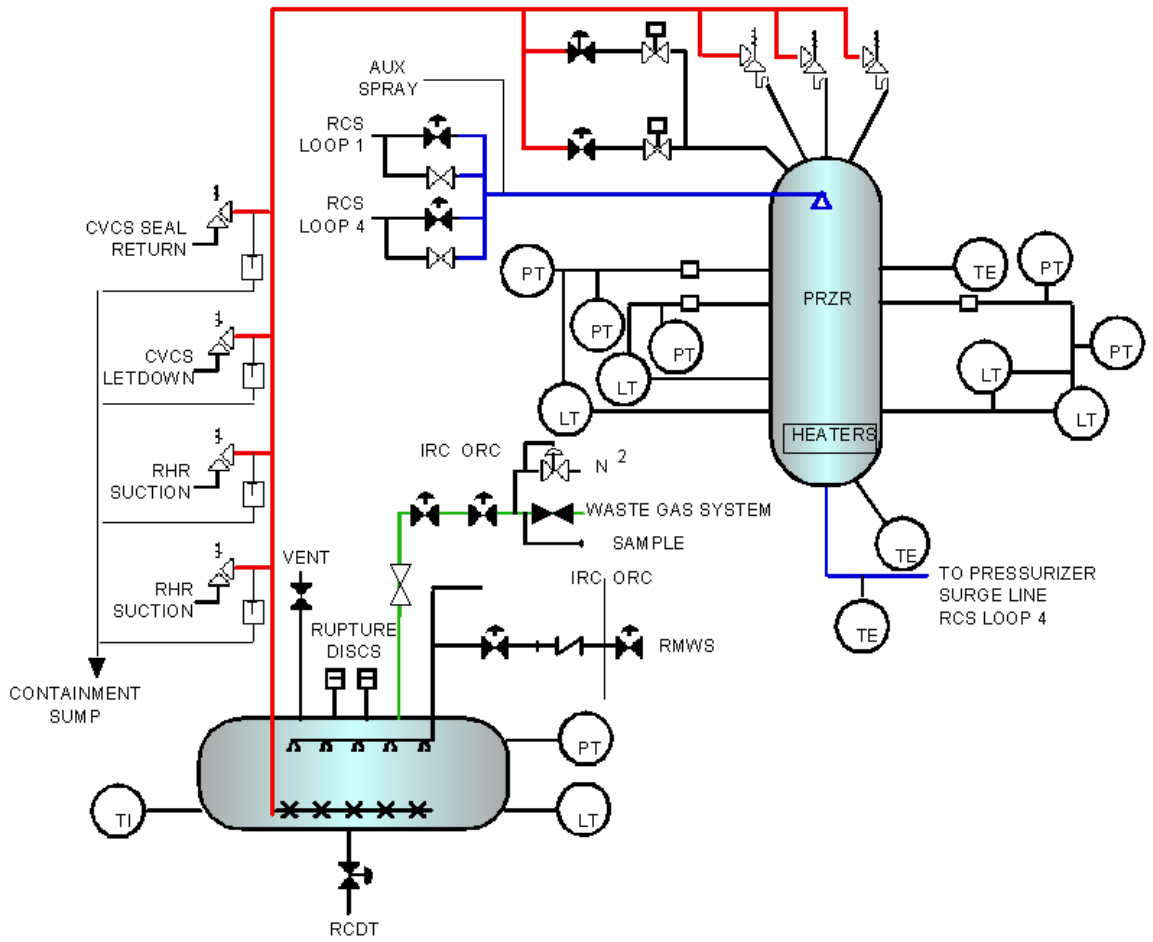

PRESSURIZER AND RELIEF TANK

FIGURE 17

OP51.SYS.RC1

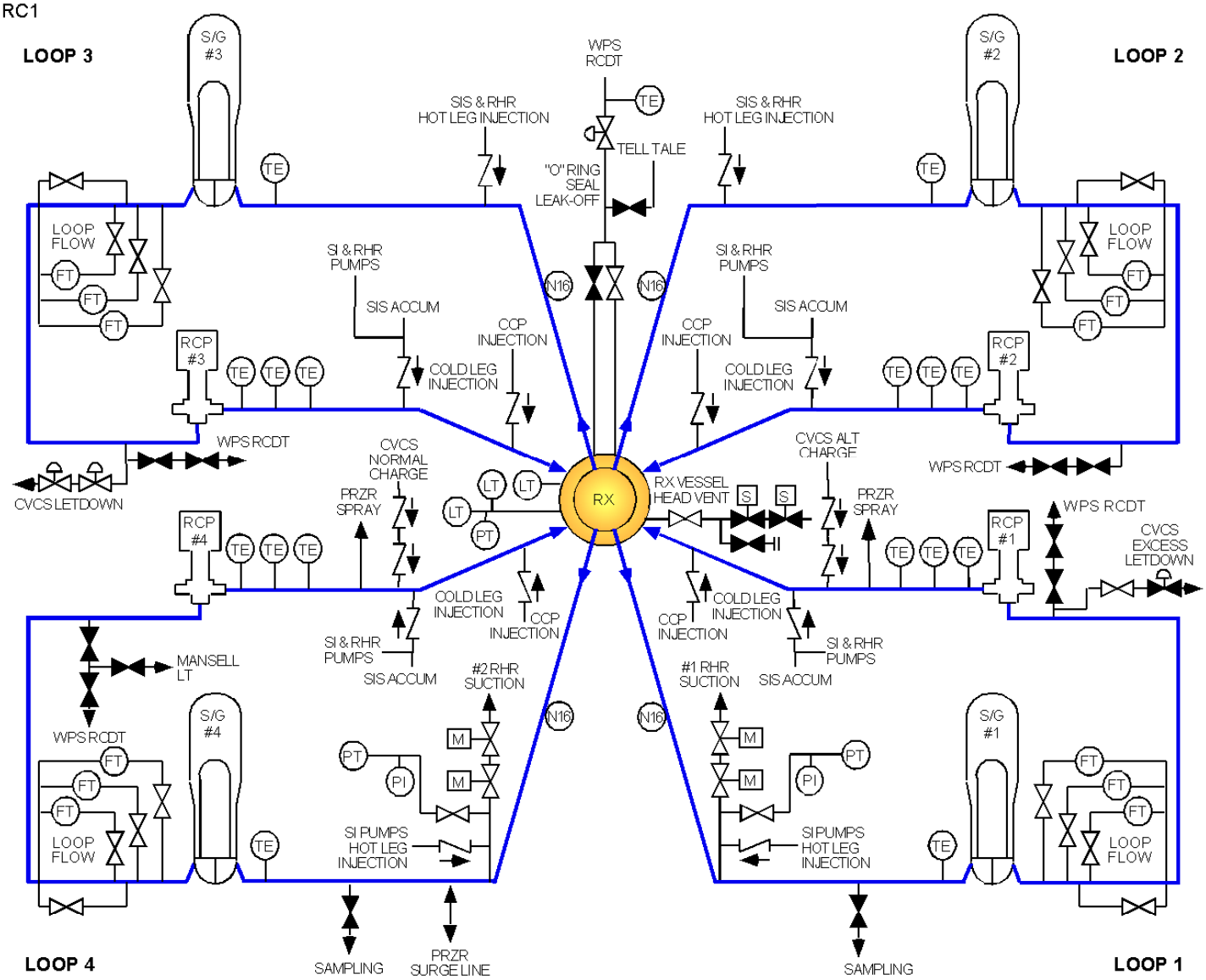

REACTOR COOLANT SYSTEM SCHEMATIC
FIGURE 2

8-16-2002

Examination Outline Cross-Reference	Level	RO	SRO
Rev. Date: 1/15/2015	Tier #	1	n/a
Change: 3	Group #	1	n/a
	K/A #	038 EA1.18	n/a
Level of Difficulty: 3	Importance Rating	4.0	n/a

Steam Generator Tube Rupture: Ability to operate and monitor the following as they apply to a SGTR: S/G blowdown valve indicators.

Question 46

Unit 1 plant conditions:

- SGTR has occurred on SG 1-01
- EOP-3.0A has been completed
- Plant staff has determined to use blowdown as the Post-SGTR Cooldown method
- EOS-3.2A, POST-SGTR COOLDOWN USING BLOWDOWN has been entered

In accordance with EOS-3.2A, blowdown is established by throttling open 1-PK-5180, SG BLDN HX OUT PRESS CTRL which is located on ____(1)____ and the blowdown may be stopped when RCS pressure decreases to < 350 psig ____(2)____.

A. (1) CB-08
   (2) to maintain adequate RCP NPSH

B. (1) CB-08
   (2) to maintain adequate RCP seal ΔP

C. (1) the SG Blowdown Control Panel
   (2) to maintain adequate RCP NPSH

D. (1) the SG Blowdown Control Panel
   (2) to maintain adequate RCP seal ΔP

Answer: B

This question matches the KA by requiring knowledge of blowdown valve controls/indications.

Explanation / Plausibility:

A. 1st part is correct. 2nd part is incorrect because as stated in a note prior to step 10 in EOS-3.2A, it is to maintain adequate seal #1 DP. It is plausible because you are reducing RCP NPSH as you depressurize the RCS.

B. 1st part is correct. 2nd part is correct.

C. 1st part is incorrect because the control/indication for 1-PK-5180 is on CB-08. It is plausible because some of the Blowdown controls are on the SG Blowdown Control Panel. 1-PK-5180 does have controls on the remote shutdown panel as well. 2nd part is incorrect but plausible (see A).

D. 1st part is incorrect but plausible (see C). 2nd part is correct.

Technical Reference: (Attach if not previously provided including revision number)	EOS-3.2A Steam Generator Blowdown Study Guide

Proposed references to be provided to applicants during examination: _____

Learning Objective: EXPLAIN the normal, abnormal and emergency operation of Steam Generator Blowdown system. (LO21.SYS.SB1.OB05)
EXPLAIN the instrumentation and controls of the Steam Generator Blowdown system and PREDICT the system response. (LO21.SYS.SB1.OB04)

Question Source:	Bank #	
	Modified Bank#	
	New	X
Question History:	Last NRC Exam	
Question Cognitive Level	Memory or Fundamental Knowledge	
	Comprehension or Analysis	X
10 CFR Part 55 Content:	55.41	41.7
	55.43	n/a

SG BLOWDOWN HEAT EXCHANGER OUTLET PRESSURE CONTROL VALVE

The SG Blowdown Heat Exchanger Outlet Pressure Control Valve (u-PV-5180) is a pneumatically operated valve located on the 778' level of the Electrical and Control Building (**Figure 3**). The function of the valve is to maintain a desired differential pressure (based on potentiometer setting) between SG pressure and pressure of the combined blowdown flow leaving the heat exchanger. The controller for the valve is an M/A station located on CB-08. The valve is normally operated in its manual mode to control system pressure and the rate of blowdown flow exiting the heat exchanger.

The SG Blowdown Heat Exchanger Outlet Pressure Control Valve is different from most throttling valves contained in the plant. The valve is a cage-guided, globe-style control valve with balanced plug. The cage is a cylindrical device through which system liquid passes through the valve. The cage acts much like the seat of a typical globe valve. The balanced plug acts like the disc of a typical globe valve. The plug travels up and down on the inside of the cage. Together the cage and plug control the rate of flow through the valve. The valve's cage contains holes around the 360 circumference of the cage. Instead of concentric line of holes, the holes are arranged in spiraled lines. The holes in the upper portion of the cage have been enlarged to prevent clogging of the cage. As the valve is opened by raising the plug upward inside the cage, the plug uncovers holes allowing flow through the valve. This type of design is utilized to prevent or minimize cavitation from the throttling process.

In the AUTO mode, u-PK-5180 maintains a constant differential pressure between the pressure within #1 SG (u-PT-5180A) and the pressure just downstream of the SG Blowdown Heat Exchanger(u-PT-5180). The constant differential pressure aids in maintaining a constant flow rate through the SG Blowdown System. By maintaining a constant differential pressure, fluctuations in SG pressure due to power changes has minimal effect on the flow rate through the S/B Blowdown System. The controller is set to control on the range of 0 - 130 psid. PT-5180 also provides a signal to drive the Main Control Board meter on CB-08. PT-5180A, which monitors the pressure inside #1 SG, only provides input to the controller.

In the MANUAL mode, u-PK-5180 output is varied using the RAISE and LOWER controller pushbuttons. Depressing the RAISE pushbutton opens u-PV-5180 which increases the flow rate through the SG Blowdown System. Depressing the LOWER pushbutton closes u-PV-5180 lowering system flow rate.

The SG Blowdown Heat Exchanger Outlet Pressure Control Valve is affected by a loss of instrument air or loss of the control signal. When Instrument Air System pressure decreases, the valve will move to its closed position and total loss of Instrument Air causes the valve to fail fully closed. The control signal comes from the controller on CB-08 which receives its power from BOP Analog Instrument Rack 05. Rack 05 receives its power from 1C2. When the control signal is lost, the I/P convertor allows no air to pass to the valve's diaphragm and the valve will fully close. In the event the control valve fails to reduce pressure below 250 psig in downstream piping, pressure switch u-PS-5185A will activate an annunciator alarm on the SG Blowdown Control Panel. Annunciator "OVERPRESSURE SYSTEM INLET UNIT # U-PA-5185B" will illuminate and cause annunciator "SG BLDN PNL TRBL" on u-ALB-7B to alarm. Pressure switch u-PS-5185A provides no signals to drive indicating meters. Pressure indication downstream of the control valve is provided by pressure transmitter u-PT-5183. This transmitter

provides indication of downstream pressure on CB-08 and the SG Blowdown Control Panel on u-PI-5183B. Both meters use a scale of 0 - 400 psig.

A two position (CLOSE and AUTO) switch located on the Remote Shutdown Panel provides the ability to stop blowdown flow from the Remote Shutdown Panel. Taking the switch to the CLOSE position energizes a solenoid in the pneumatic positioner's supply line which prevents the air position signal from reaching the diaphragm. When the solenoid energizes, the supply port is blocked and the downstream air pressure is vented to atmosphere. This causes the valve to fail closed. The solenoid is powered from uD2-2.

STEP	ACTION/EXPECTED RESPONSE	RESPONSE NOT OBTAINED

NOTE: Blowdown from ruptured SG(s) may be stopped when RCS pressure decreases to less than 350 psig to maintain adequate RCP number 1 seal differential pressure.

[R]	10	Establish Blowdown From Ruptured SG(s): a. Make plant announcement and notify Plant Staff that blowdown is being established. b. Pull the following fuses: • 1-CR-03/FU/28 (CP1-ECPRCR-03) BOP ARR #1 • 1-CR-04/FU/27 (CP1-ECPRCR-04) BOP ARR #2 c. If necessary, defeat 1-RE-4200 actuation signal: • Set 1-RE-4200 (SGS-164) HIGH ALARM SETPOINT (Channel Item 009) to "0". d. Ensure Condensate System flow aligned to SG Blowdown Heat Exchanger. e. Place SG BLDN HX OUT PRESS CTRL, 1-PK-5180 in MANUAL and CLOSED.	Go to alternate post - SGTR cooldown procedure: • EOS-3.1A, POST-SGTR COOLDOWN USING BACKFILL, Step 1 -OR- • EOS-3.3A, POST-SGTR COOLDOWN USING STEAM DUMP, Step 1

STEP	ACTION/EXPECTED RESPONSE	RESPONSE NOT OBTAINED
	f. Verify 1-PI-5180, SG BLDN HX OUT PRESS within 200 psig of Main Steam Pressure.	f. Perform the following: 1) Ensure affected SG(s) blowdown valve is closed: • 1-FK-2440, SG 1 BLDN CTRL • 1-FK-2441, SG 2 BLDN CTRL • 1-FK-2442, SG 3 BLDN CTRL • 1-FK-2443, SG 4 BLDN CTRL 2) Locally close all SG blowdown isolation valves (SFGD 832 Penetration Room): • 1MS-0355, SG 1-01 BLDN DNSTRM ISOL VLV • 1MS-0356, SG 1-02 BLDN DNSTRM ISOL VLV • 1MS-0357, SG 1-03 BLDN DNSTRM ISOL VLV • 1MS-0354, SG 1-04 BLDN DNSTRM ISOL VLV
	g. Manually open ruptured SG(s)blowdown isolation valves on MCB.	
	h. <u>IF</u> local blowdown isolation valves closed in Step 10f, <u>THEN</u> slowly open the affected SG(s) blowdown isolation valve(s) • 1MS-0355, SG 1-01 BLDN DNSTRM ISOL VLV • 1MS-0356, SG 1-02 BLDN DNSTRM ISOL VLV • 1MS-0357, SG 1-03 BLDN DNSTRM ISOL VLV • 1MS-0354, SG 1-04 BLDN DNSTRM ISOL VLV	
	i. Raise SG BLDN HX OUT PRESS CTRL, 1-PK-5180 demand to establish desired blowdown flow.	i. Align valves as necessary.

ATTACHMENT 4
PAGE 15 OF 24

BASES

STEP 10: The ruptured steam generators will act like a large pressurizer to the RCS and inhibit RCS depressurization. In order to reduce primary pressure to establish RHR cooling, both the ruptured steam generator and RCS must be depressurized. In this recovery scheme the ruptured steam generator pressure is decreased by draining the steam generator using blowdown to expand the steam volume. Fuses are pulled to remove interlock on blowdown valves from Aux Feed Auto Start (These fuses defeat interlock for automatic Auxiliary Feedwater Pump Start signals from both MFP trips, SG low-low level, SI, BOS and AMSAC) and the radiation monitor actuation signal is defeated to allow valves to open (The radiation monitor HIGH ALARM SETPOINT (Channel Item 009) can be set to "0" by Prompt Team using controls at PC-11 or at the RM-80 via the RM23'P'.) When local valve operation is required, more than one operator may be necessary. Portable radios may not transmit from the Safeguards 832 penetration room and emergency lighting is not available. If blowdown cannot be initiated, the operator is directed to EOS-3.1A, POST-SGTR COOLDOWN USING BACKFILL, or EOS-3.3A, POST-SGTR COOLDOWN USING STEAM DUMP.

A plant announcement is made and Plant Staff is notified to alert plant personnel of changing radiation fields out in plant. [R] has been identified to alert the operator that with activity levels in the blowdown system, radiation levels may increase in the safeguards, auxiliary, electrical control, and turbine buildings and affect local recovery actions.


5G BLDN
CONTROL PANEL

OP51.SYS.SB1

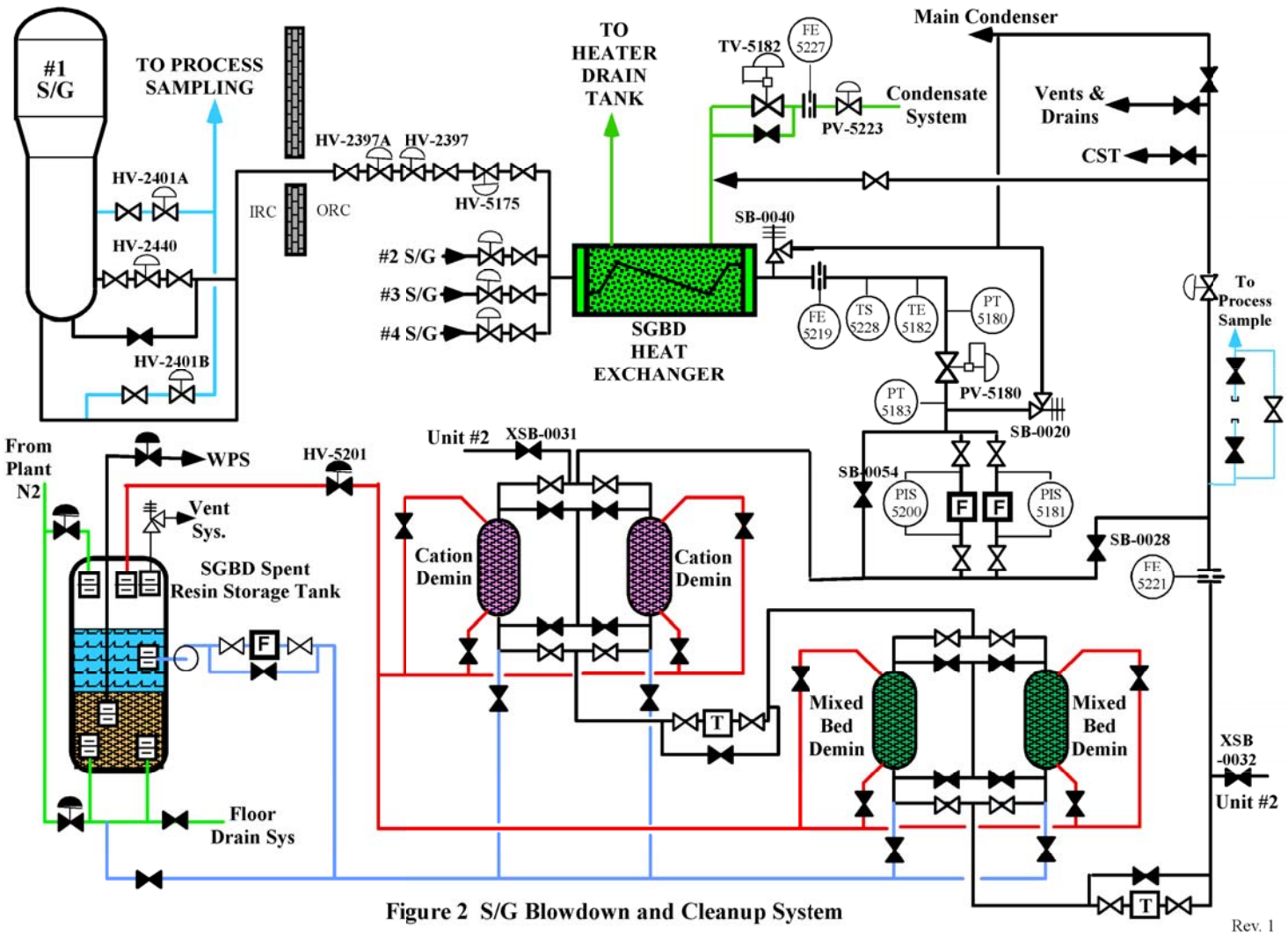

Figure 2 S/G Blowdown and Cleanup System

Rev. 1

Examination Outline Cross-Reference	Level	RO	SRO
Rev. Date: 1/7/2015	Tier #	1	n/a
Change: 2	Group #	1	n/a
	K/A #	040 W/E12, EK2.2	n/a
Level of Difficulty: 4	Importance Rating	3.6	n/a

Steam Line Rupture – Excessive Heat Transfer: Knowledge of the interrelations between the (Uncontrolled Depressurization of all Steam Generators) and the following: Facility's heat removal systems, including primary coolant, emergency coolant, the decay heat removal systems, and relations between the proper operation of these systems to the operation of the facility.

Question 47

Initial plant conditions on Unit 1:

- Reactor power = 100%
- A main steam line break occurs inside containment
- Main Steam Isolation Valves will not close from the control room
- An operator is dispatched to locally close the MSIVs per EOP-0.0A, REACTOR TRIP OR SAFETY INJECTION

Current plant conditions:

- Crew has transitioned to ECA-2.1A, UNCONTROLLED DEPRESSURIZATION OF ALL STEAM GENERATORS
- All SG NR levels = approximately 5%

Based on the above plant conditions, complete the following statements regarding AFW flow to the SGs in accordance with ECA-2.1A.

1. A minimum of ____(1)____ must be maintained to prevent SG tube dryout.

2. This feed rate ____(2)____ be reduced if RCS cooldown rate exceeds 100°F/hr.

A. (1) 100 gpm per SG
   (2) must

B. (1) 100 gpm per SG
   (2) should NOT

C. (1) 460 gpm total SG flow
   (2) must

D. (1) 460 gpm total SG flow
   (2) should NOT

Answer: B

This question matches the KA by requiring knowledge of how the plant heat removal system (AFW) interacts with the RCS during an Excessive heat transfer event.

Explanation / Plausibility:

A. 1st part is correct. Per ECA-2.1A, 100 gpm AFW flow must be maintained to each SG in order to prevent tube dryout. 2nd part is incorrect because per ECA-2.1A, if cooldown rate exceeds 100 ^{O}F/hr, AFW flow should be reduced TO 100 gpm per SG. It is plausible because in several portions in the EOP, actions are limited by the 100 ^{O}F/hr cooldown rate.

B. 1st part is correct. 2nd part is correct.

C. 1st part is incorrect because the 100 gpm per SG is the minimum flow required by ECA-2.1A. It is plausible because in EOP 0.0A if RCS temperature is decreasing, it directs a minimum of 460 gpm flow to the SGs. 2nd part is incorrect but plausible (see A).

D. 1st part is incorrect but plausible (see C). 2nd part is correct.

Technical Reference: (Attach if not previously provided including revision number)	EOP 0.0A, EOP 2.0A, ECA 2.1A

Proposed references to be provided to applicants during examination: _____

Learning Objective: STATE the bases for operator actions, notes and cautions from EOP-2.0 (LO21.ERG.E2A.OB05)

Question Source:	Bank #	
	Modified Bank#	
	New	X
Question History:	Last NRC Exam	
Question Cognitive Level	Memory or Fundamental Knowledge	
	Comprehension or Analysis	X
10 CFR Part 55 Content:	55.41	41.7
	55.43	n/a

STEP	ACTION/EXPECTED RESPONSE	RESPONSE NOT OBTAINED

CAUTION: A minimum AFW flow of 100 gpm must be maintained to each SG with a narrow range level less than 43% (50% FOR ADVERSE CONTAINMENT).

NOTE: Shutdown margin should be monitored during RCS cooldown.

* 2	Control AFW Flow To Minimize RCS Cooldown:	
	a. Check cooldown rate in RCS cold legs - LESS THAN 100°F/HR	a. Decrease AFW flow to 100 gpm to each SG. Go to Step 2c.
	b. Check narrow range level in all SGs - LESS THAN 60%	b. Control AFW flow to maintain narrow range level less than 60% in all SGs.
	c. Check RCS hot leg temperatures - STABLE OR DECREASING	c. Control AFW flow or dump steam to stabilize RCS hot leg temperatures.

BASES

CAUTION: If AFW flow to a SG is isolated and the SG is allowed to dry out, subsequent reinitiation of feed flow to the SG could create significant thermal stress conditions on SG components. Maintaining a minimum verifiable AFW flow to the SG allows the components to remain in a "wet" condition, thereby minimizing any thermal shock effects if feed flow is increased.

NOTE: This note advises the operator to monitor RCS boron concentration to verify adequate shutdown margin during the cooldown to cold shutdown. Note that since ECCS was in service, RCS boron concentration is expected to be sufficient.

Periodic samples should be taken to monitor shutdown margin, however the operator should not wait for the sample results.

STEP 2: Depending upon the size of the effective break areas for the steam generators, the cooldown rate experienced after reactor trip could exceed 100°F/hr. A reduction of AFW flow to the steam generators has three primary effects:

1) To minimize any additional cooldown resulting from the addition of AFW.

2) To prevent steam generator tube dry out by maintaining a minimum AFW flow to the steam generators, and

3) To minimize the water inventory in the steam generators that eventually is the source of additional steam flow to containment or the environment.

The 100 gpm value is representative of a minimum measurable feed flow to a steam generator.

As steam flow rate drops, the feed flow will eventually increase the steam generator inventory. Feed flow is controlled to maintain steam generator narrow range level less than 60% to prevent overfeeding the steam generators.

STEP	ACTION/EXPECTED RESPONSE	RESPONSE NOT OBTAINED
* 9	Check RCS Temperature - • RCS AVERAGE TEMPERATURE STABLE AT OR TRENDING TO 557°F	IF temperature less than 557°F and decreasing, THEN perform the following: a. Stop dumping steam. b. IF cooldown continues, THEN reduce total AFW flow as necessary to minimize the cooldown: • Maintaining a minimum of 460 gpm UNTIL narrow range level greater than 43% (50% for ADVERSE CONTAINMENT) in at least one SG. • As necessary to maintain SG levels WHEN narrow range level greater than 43% (50% for ADVERSE CONTAINMENT) in at least one SG. • IF Turbine Driven AFW pump is not required to maintain greater than 460 gpm flow, THEN stop Turbine Driven AFW pump. c. IF cooldown continues, THEN close main steamline isolation valves. IF temperature greater than 557°F and increasing, THEN dump steam: • to condenser using steam dumps -OR- • to atmosphere using SG atmospherics

Main Steam Isolation Valves (Figure 6)

Main Steam Isolation Valve design:

- Design pressure: 1200 psig
- Design temperature: 600°F
- Steam Flow rate: 4.0×10^6 lb/hr
- Normal pressure: 975 psig
- Normal temperature: 541°F
- Actuator: Stored Energy from N_2

Each Main Steam line is provided with a Main Steam Isolation Valve (MSIV). Each valve is a quick acting, 32 inch diameter inlet, Y-type pattern globe valve with a 34 inch diameter outlet. MSIVs are designed to stop flow, from either direction, within 5 seconds following receipt of a close signal to prevent an uncontrolled steam release from more than one SG, and to protect containment from over-pressurizing.

Each MSIV is installed outside containment, downstream of the safety valves, and has a manual 4 inch bypass valve to allow warming of the main steam system piping and to equalize pressure across the MSIV for opening. Like the MSIV, the bypass valve is designed to stop steam flow from either direction.

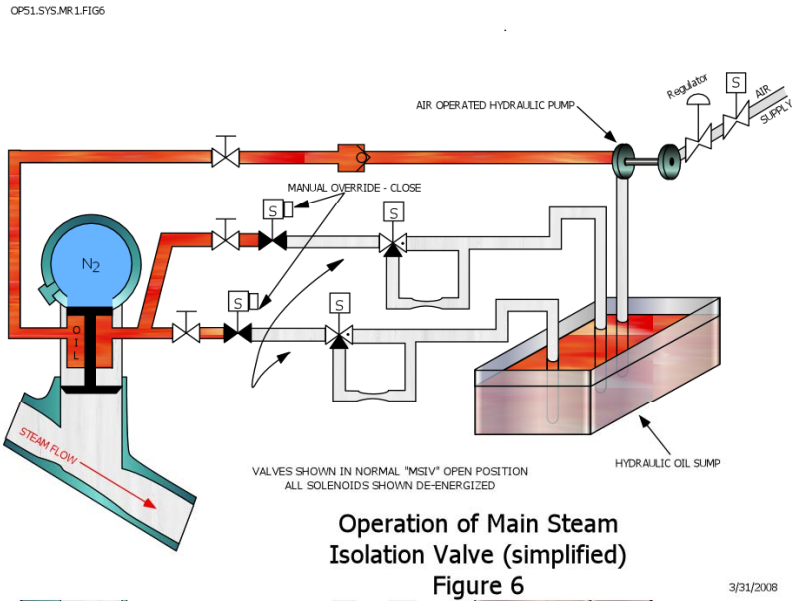

Operation of Main Steam Isolation Valve (simplified)
Figure 6

Each MSIV is opened using an air driven, positive displacement, hydraulic pump known as the Haskel Pump. Taking suction from an oil sump, it pumps oil, thru a check valve then an isolation valve, to the bottom side of the MSIV operating piston. Hydraulic oil pressure under the MSIV operating piston overcomes nitrogen pressure, in the MSIV accumulator, causing the MSIV to open. The MSIV opening sequence takes about 10 minutes to complete. Once the MSIV is fully open, the Haskel pump becomes "stalled" (having a no flow condition), to maintain the MSIV open until a close signal is received. Discharge pressure of the "stalled" Haskel pump is controlled by a pump supply side air pressure regulator. The pump drive is a pilot controlled, continuously cycling, double acting, air cylinder design. The practical working ratio of the pump's air drive area to the liquid plunger area is 60. Therefore, the pump delivers 3000 psi hydraulic pressure, with some flow, when air drive pressure is maintained at about 50 psig while cycling. "Stalled" discharge pressure is about 15% higher, at around 3450 psig.

Occasionally the pump "stalls" in a position where the air piston contacts the pilot valve but does not fully activate it. In this position, air may be heard exhausting from the pilot valve, or the air cycling valve may be in a mid position resulting in continuous air exhaustion from the muffler. These occurrences most commonly appear when a prolonged period of warm weather is followed by cold weather conditions.

Air continues to exhaust (sometimes for a couple of days) until hydraulic pressure decreases enough for the pump to complete the cycle, or the operator takes action to "agitate" the Haskel pump. "Agitation" can be accomplished by placing a hand over the muffler to create a back pressure on the air exhaust, or by momentarily shutting the air supply valve to the Haskel pump, then reopening the valve. Lubrication of the cycling control spool valve is also helpful in reducing the occurrences of air blowing out the muffler. This lubrication can (and has been) be done safely at power. Anytime air is heard from the Haskel pump, hydraulic pressure should be checked to confirm that it is in the normal band (greater than 3000 psig).

MSIVs are closed by operation of the MSIV valve actuators. The actuator is, in effect, a hydraulic cylinder coupled directly to a nitrogen accumulator. The accumulator is designed as a chamber and stores the energy required for closing the MSIV in the form of compressed nitrogen gas. Because the accumulator is an integral part of the cylinder, the loss of any external manifolding or system elements will not prevent the actuator from closing the valve.

A hydraulic control system which maintains hydraulic fluid below the valve actuator piston is used to regulate valve closure velocity. Closure of the MSIV is accomplished by an electric signal which operates two CLOSE solenoid valves in the hydraulic control system portion of the actuator. When the CLOSE solenoids are energized, hydraulic oil pressure is directed to the sump allowing nitrogen pressure to force the MSIV closed. These solenoid valves permit the hydraulic fluid below the actuator piston to flow into a hydraulic reservoir at a controlled rate as the compressed nitrogen extends the actuator to close the MSIV.

Two hydraulic control system manifolds are provided, each of which is capable of providing valve closure independently of the other. The MSIV fails closed on a loss of hydraulic fluid. Valves must close within 5 seconds of receiving an actuation signal to ensure the MSIV is operable.

If the nitrogen side develops a leak, then the valve may fail to meet this closure time, thus making the MSIV inoperable. This minimum nitrogen pressure required to close the MSIV within the required stroke time is approximately 1839 psig. The nitrogen accumulator can be recharged by either temporary nitrogen bottles or plant gas system nitrogen supply. To use the plant gas system, maintenance personnel must first connect a temporary hose from the hard pipe, then connect the hose to the accumulator inlet valve.

MSIVs are normally operated from the Control Room at control panel uCB-08 using MSIV control handswitches uHS-2333A thru uHS-2336A. In the event the Control Room becomes uninhabitable, the MSIVs may also be operated from the RSP after transferring control at the Shutdown Transfer Panel (STP). When control is transferred, the MSIVs will close. The MSIVs are powered from <u>both</u> trains of safety related 125 vdc (<u>u</u>ED1-1 and <u>u</u>ED2-1). The MSIV

“CLOSE” solenoids are powered from the above source and must energize to close the MSIV. During power operation the CLOSE solenoids will normally be deenergized.

If the MSIV can not be closed remotely, two local manual overrides are provided per MSIV, that may be operated to relieve hydraulic oil pressure back to the reservoir. To close the MSIV, these local overrides must be manually operated in order to allow the hydraulic fluid to return to the reservoir. Nitrogen in the MSIV actuator will cause rapid MSIV closure as the hydraulic fluid returns to the reservoir.

Examination Outline Cross-Reference	Level	RO	SRO
Rev. Date: 1/15/2015	Tier #	1	n/a
Change: 3	Group #	1	n/a
	K/A #	054 AA2.08	n/a
Level of Difficulty: 3	Importance Rating	2.9	n/a

Loss of Main Feedwater: Ability to determine and interpret the following as they apply to the Loss of Main Feedwater (MFW): Steam flow-feed trend recorder.

Question 48

Unit 1 plant conditions:

- Reactor power = 45%
- The air line to 1-FCV-530, Feedwater Control Valve to SG1-03 is severed

1. The Main Control Board feedwater flow recorder trend is ____(1)____.

2. The reactor ____(2)____ trip due to SG level.

Assume no operator action.

A. (1) decreasing
   (2) will

B. (1) decreasing
   (2) will NOT

C. (1) increasing
   (2) will

D. (1) increasing
   (2) will NOT

Answer: A

Explanation / Plausibility:

A. 1st part is correct. The FCVs fail closed on a loss of air. 2nd part is correct. At 45% power, the FCBV cannot pass enough flow to maintain SG level.

B. 1st part is correct. 2nd part is incorrect because the FCBV will not be able to supply enough flow to maintain SG level. It is plausible because if power were < 20% power, it would be correct.

C. 1st part is incorrect because the FCV will fail close on a loss of air. It is plausible because if the FCV failed open on a loss of air, it would be correct. 2nd part would be correct if the valve had failed open.

D. 1st part is incorrect but plausible (see C). 2nd part is incorrect because you will not trip on high level. This is paired with the increasing statement is still plausible because the FCV were to fail open due to a bad input, the level dominant signal would override the bad flow signal.

Technical Reference: (Attach if not previously provided including revision number)	Main Feedwater Study Guide Main Steam System Study Guide LO21.SYS.MF1

Proposed references to be provided to applicants during examination: _____

Learning Objective:	EXPLAIN the instrumentation and controls of the Main Feedwater system and PREDICT the system response. (LO21.SYS.MF1.OB04)

Question Source:	Bank #	
	Modified Bank#	
	New	X
Question History:	Last NRC Exam	
Question Cognitive Level	Memory or Fundamental Knowledge	
	Comprehension or Analysis	X
10 CFR Part 55 Content:	55.41	
	55.43	n/a

Main Feedwater Study Guide

Level Transmitters

SGs use wet reference leg differential pressure type level transmitters. SGs 1 and 2 have six transmitters. Four of the six transmitters are narrow range. Two are wide range transmitters, one of which feeds to the control room and the other feeds the RSP. SGs 3 and 4 use five of these level transmitters with four being narrow range and one wide range. RSP wide range level indication for SGs 3 and 4 is driven from its associated wide range transmitter.

If the density of the fluid in the reference leg is the same as that in downcomer, then:

$$P_1 = gh_{downcomer} + P_{downcomer}$$

$$P_2 = gh_{ref} + P_{downcomer}$$

$$P_2 - P_1 = g\,(h_{ref} - h_{downcomer})$$

Where:

g = force due to gravity

P = pressure

h = height

If the reference leg height is maintained at a constant level, then the height of the fluid level in the downcomer is proportional to the differential pressure. A condensing pot at the top of the reference leg is kept uninsulated. The uninsulated region is relatively cooler and steam will condense inside the pot and maintain a constant reference leg level.

A problem arises when the temperature of the reference leg fluid is considerably different from the downcomer fluid. Differential pressure is expressed as:

$$P = g(P_{ref} \times h_{ref} - P_{downcomer} \times h_{downcomer})$$

During normal steady-state operations, the difference in density due to difference in the two fluid temperatures is compensated for by calibrating the level instrument to include the expected difference in density. The problem is more of a concern during a postulated high energy line break. In this condition the reference leg temperature increases as the containment temperature increases. This change in density of the reference leg from its calibrated condition will cause an error in the indicated steam generator level. Actual level will be less than indicated level for the SG as reference leg temperature increases.

Another problem involving reference legs is reference leg boiling. Reference leg boiling can occur with a sudden pressure drop in the steam generator (i.e. steam line break, step increase in load). If the reference leg pressure decreases to less than the saturation pressure, then boiling will occur. This decreases the density of the fluid in the reference leg and will cause an error in the indicated steam generator level. Actual level would be less than indicated level for the affected SG as reference leg level decreases.

Narrow range 0 to 100% level indication is provided on the main control board for all four steam generators. One channel of narrow range level indication, steam flow, and feed flow are

displayed on a recorder. A selector switch will select one of two narrow range level detectors on each SG to supply control signals for the control system, trend recorder and alarm. Protective outputs from narrow range level are low-low SG level reactor trip, high-high SG level turbine trip, and low steam generator level AMSAC actuation.

The wide range (cold cal) level detector shares an upper tap with a narrow range detector and has a lower tap just above the tube sheet. Wide range indication on the main control board and RSP is used when outside the normal operating band. The main control board also has two wide range level recorders. Each wide range recorder receives input from two SGs.

The relationship between the narrow range and wide range is such that approximately 57% level wide range is approximately 0% level narrow range. A 60% level indication on the wide range ensures that the tube bundle is covered. Normal level is maintained constant at 67% narrow range on Unit 1 and 64% narrow range on Unit 2.

Actual level is compared with normal level setpoint 67% (64%) and summed with density compensated steam flow and feed flow for a control signal to the Feedwater Control Valve (FCV). If the level transmitter fails high, then the associated FCV will try to close down to compensate, causing the affected SG level to trend down to a low level trip setpoint 38% (35.4%). Conversely, if the level transmitter fails low, then the associated FCV will try to open to compensate, causing the affected SG level to trend up to a high level trip setpoint 84% (81.5%).

Feed Flow Transmitters

Two feedwater flow transmitters are located at a flow nozzle on each main feed line upstream of the feedwater control valve. The instruments measure the differential pressure across the flow nozzle. The square root of this signal is proportional to the flow. Feedwater flow signals are used for level control. The control signal may be selected from either transmitter by a selector switch. The controlling channel will be recorded on recorders, indicated on the main control board, and used for alarm function. Flow is indicated on the main control board in millions of lbm/hr.

Feedwater flow is summed together with normal level setpoint 67% (64%) and compared with density compensated steam flow for a control signal to the FCV. If the feed flow transmitter fails high, then the associated FCV will try to close down to compensate, causing the affected SG level to trend down to a low level trip setpoint 38% (35.4%). Conversely, if the feed flow transmitter fails low, then the associated FCV will try to open to compensate, causing the affected SG level to trend up to a high level trip setpoint 84% (81.5%).

Steam Flow Transmitter

Steam flow indication is obtained by measuring the pressure drop across the flow restrictor in the steam nozzles of the steam generator. The output of these differential pressure transmitters is density compensated by a signal from a steam pressure transmitter to produce an accurate indication of steam flow. Density compensation makes the square root of the D/P across the nozzle proportional to the mass flow rate through the nozzle.

A control steam flow signal is selected from either of two transmitters by a switch located on the main control board. Two separate steam pressure transmitters are selected to provide pressure compensation to the steam flow indication and control. One pressure transmitter is associated with each steam flow channel. The pressure transmitter providing compensation is selected by

selecting the associated steam flow channel for control. The control channel is also displayed on a MCB recorder. Both steam flow channels are displayed on the MCB.

Steam flow is compared to feedwater flow and level setpoint for the FCV. Steam flow is also used, through a summer with the other SGs, as total steam flow to the Main Feedwater Pump speed control program. If the steam flow transmitter fails low, then the associated FCV will try to close down and the MFP speed will decrease, causing the affected SG level to trend down to a low level trip setpoint 38% (35.4%). Conversely, if the steam flow transmitter fails high, then the associated FCV will try to open and MFP speed will increase, causing the affected SG level to trend up to a high level trip setpoint 84% (81.5%).

Steam Pressure Transmitters

Each Main Steam line has at least five steam pressure transmitters. Loop 1 and 2 have one additional steam pressure transmitter each for RSP indication. One transmitter on each steam line is used solely to control the ARV and indication. Another transmitter on each steam line is used solely to provide calorimetric data input to the plant computer. Three channels are used for control, protection and indication. Of these three channels, two channels provide pressure compensation for the steam flow signal. Failure modes for the steam pressure transmitters are the same as the above description for steam flow transmitters.

Indications for four pressure channels per steam line are displayed on the MCB. One chart recorder displays main steam line pressure for all four SGs. Steam pressure is also indicated on the RSP. When the RSP steam pressure indication is used with the steam tables, this indication becomes a faster indication of cooldown rate than using the strap-on wide range temperature indication normally used.

Feedwater Valve Control

The Feedwater Control Valve (FCV) is controlled by a three-element controller to maintain valve position so that sufficient feedwater flows into the SG to maintain desired level. The three signals that determine the valve position are SG level, steam flow and the feedwater flow. The normal control setpoint is 67% (64% Unit 2).

The level error signal represents the deviation of the measured level from setpoint level. The measured level is obtained by sending the signal from one of two narrow range level channels, selected by the MCB selector switches, through a filtering network to dampen the natural oscillations. The signal is then compared in a summer against the level setpoint and an error signal is generated to the FCV. The level setpoint can be adjusted, based on the input from turbine impulse pressure, however it is currently set for constant output, which results in a constant level setpoint.

The proportional integral (PI) controller sends a signal to the valve controller. A summer subtracts the feedwater flowrate from the steam flowrate to generate a flow error signal. The flow error is added to the level error. This total error signal is sent to a PI controller to eliminate steady-state errors in feedwater flow.

The proportional function of the PI controller produces an output signal that is proportional to the error signal. The integral function produces an output signal that will continue to change (increase), even if the error signal does not change until the controller reaches its maximum of 20 ma (4-20 ma range). This electrical signal is converted to an air signal to operate the valve positioner. The FCV has a somewhat linear flow versus valve position characteristic and a

balanced valve disc design requires only a small operating force. The valve has an air operating diaphragm for opening with a spring for closing.

Each FCV can be controlled manually from the main control board. Open and closed indication lights are located above the controller. Due to operational experience with high power FCV oscillations, Bailey positioners have been replaced with Moore positioners.

Four means are provided to override the control signal from the steam generator level control system to the FCV:

- Manual control
- High level trip P-14 @ 84% (81.5%)
- Low Tavg and Reactor Trip
- Safety Injection signal

The high level trip exists to prevent excessive moisture carryover to the turbine. Actuation of this signal closes all feedwater valves, trips the feedwater pumps and trips the main turbine. The low Tavg signal causes all feedwater valves to close following a reactor trip and a reactor coolant system cooldown. Actuation of Safety Injection will cause all feedwater valves to close and trips the feedwater pumps. These functions are required to ensure that main feedwater is blocked to all steam generators following SI actuation, since the addition of feedwater can increase the severity of certain accidents which cause SI actuation.

Automatic control of feedwater flow using the FCV is not practical at low power levels because the steam flow and feed flow signals used are of insufficient strength and stability. In addition, the control valve will not easily control at low flow rates because of non-linear flow (at low power conditions) versus valve position characteristics. Therefore, the FCV control may not be operated in automatic at a power level of less than 15%. The Feedwater Bypass Control Valve (FBCV), with a capacity of 20% of full flow and an automatic controller, is provided for low power operation.

The FBCV only uses the SG narrow range level error signal to control feedwater flow. The level signal and the level references are summed in the PI controller, to give a compensated error signal. Remember that both level and level reference have already been filtered to eliminate small variations in the signal. The level error is sent to the FBCV positioner.

Protection for the FBCV valve signal is provided and is identical to that on the FCV. Four means are provided to override the control signal from the steam generator level control system to the FBCV:

- Manual control
- High level trip P-14 @ 84% (81.5%).
- Low Tavg and Reactor Trip.
- Safety Injection signal.

The FBCV can be manually operated from the main control board. Open and closed indication lights are provided. This switch is a little different than most handswitch on the MCB. This switch will actually operate both the FCV and the FBCV.

CPS1.SYS.MR1.FIG10

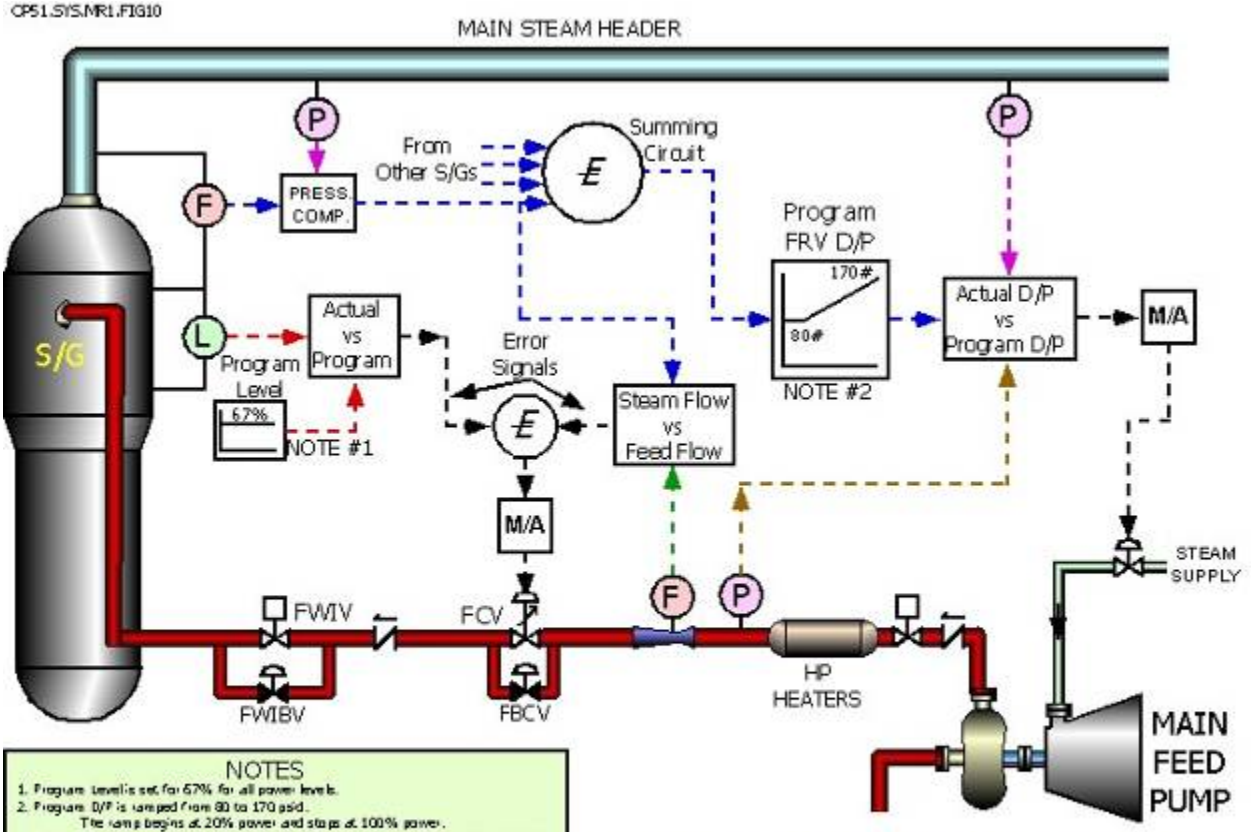

NOTES

1. Program Level is set for 67% for all power levels.
2. Program D/P is ramped from 80 to 170 psid.
   The ramp begins at 20% power and stops at 100% power.
3. The S/G level control system is level dominant, in order to be affected by flow error, the flow error must be proportionately > level error.
4. The FBCV is used to control S/G level from 0--20% power.
5. The FCV is used to control S/G level from ~15-100% power.

Unit 1Basic S/G Water Level Control
Figure 10

3/31/2008

Unit 1 Main Feedwater System

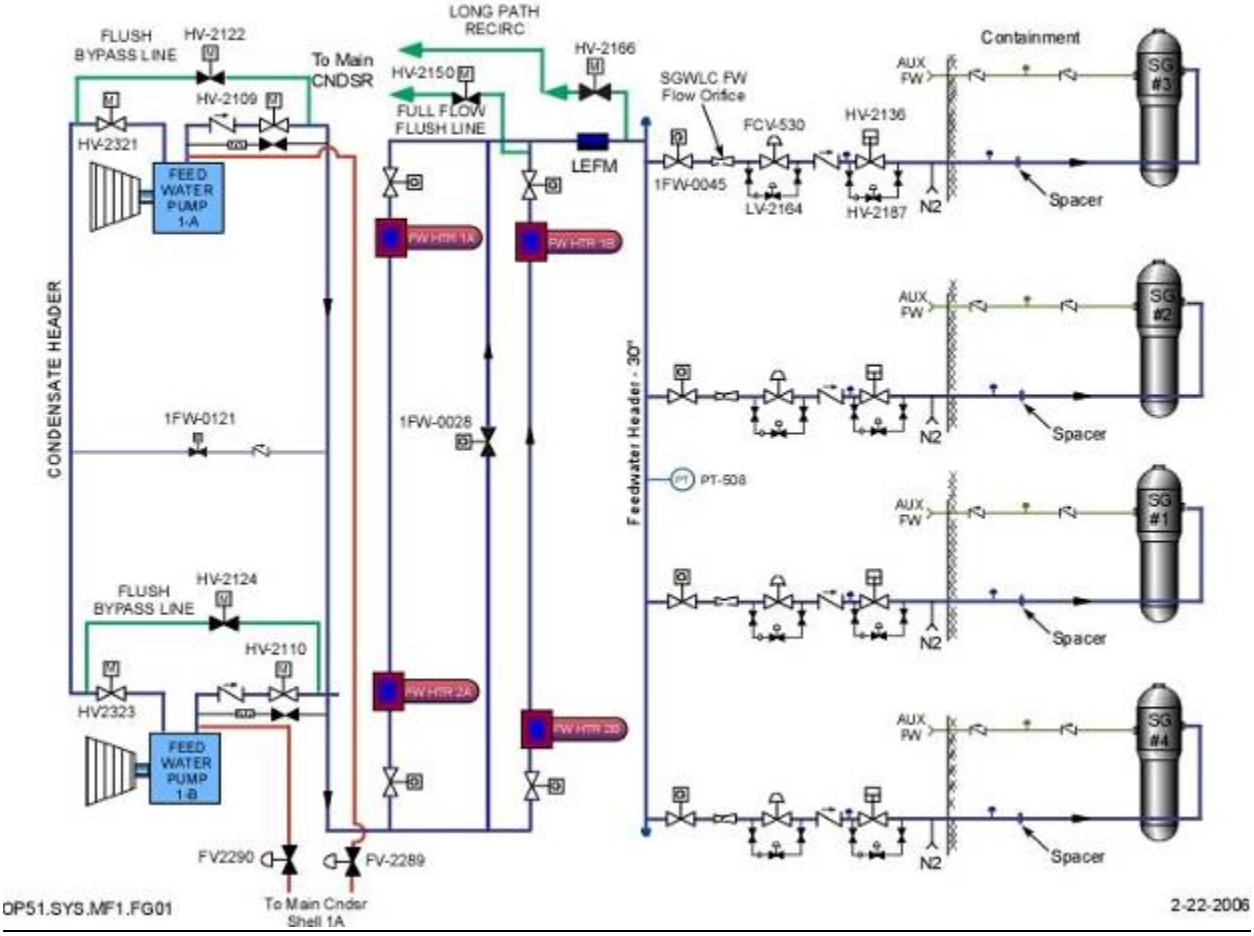

Main Feedwater Study Guide

FEEDWATER CONTROL VALVE (FCV) OPERATION

The feedwater control valve is a 16 inch port throttling type valve. This type valve has ported cage internals with the pressure drop occurring across the holes in the cage. This valve type has a somewhat linear flow versus valve position characteristic, and the balanced design requires only a small operating force. The valve has an air operating diaphragm for opening, with spring closing. Air is supplied to the diaphragm from instrument air by a pneumatic valve positioner. The positioner is actuated by an air signal from an I/P converter receiving the controller output signal.

Protection is provided by two train related, solenoid valves in the control air line between the positioner and the diaphragm valve actuator. Each solenoid, when de energized, will vent the control air off, causing the feed control valve to fail closed. Two solenoid valves are used to provide protection grade train separation. One valve is designated train A; the other, train B.

Feedwater Control Valves (u-FCV-0510, -0520, -0530, -0540) are air operated, fail closed valves providing a modulating function to regulate feedwater flow rates from approximately 20% to full power operation. A single handswitch (u-HS-2162, -2163, -2164, -2165) on CB-09 with close and auto positions controls the Feed Control and Feed Control Bypass valves together. In the auto position the Westinghouse controllers will modulate the valves and in the close position both the FCV and FCBV valves will close. Position indication is also provided on the Monitor Light Box (MLB-4B) and on the Plant Computer.

Examination Outline Cross-Reference	Level	RO	SRO
Rev. Date: 1/15/2015	Tier #	1	n/a
Change: 3	Group #	1	n/a
	K/A #	056 G2.2.38	n/a
Level of Difficulty: 3	Importance Rating	3.6	n/a

Loss of Off-site power: Knowledge of conditions and limitations in the facility license.

Question 49

A fire occurs in the 138 KV switchyard resulting in the breakers that supply power to the site tripping.

Based on the above event, which ONE of the following is correct?

A. Unit 2 lost its normal offsite power supply. Units 1 and 2 meet the LCO entry requirements for TS 3.8.1

B. Unit 1 lost its normal offsite power supply. Units 1 and 2 meet the LCO entry requirements for TS 3.8.1

C. Unit 2 lost its normal offsite power supply. ONLY Unit 2 meets the LCO entry requirements for TS 3.8.1

D. Unit 1 lost its normal offsite power supply. ONLY Unit 1 meets the LCO entry requirements for TS 3.8.1

Answer: A

This question matches the KA by requiring knowledge of how a loss of offsite power (1 switchyard in this case) affects operations (conditions of license or TS).

Explanation / Plausibility:

A. This is correct. The 138 KV switchyard is the normal supply of power to Unit 2. Because it is the backup supply for Unit 1, neither unit has 2 offsite sources of power which requires entry into LCO for TS 3.8.1 for both units.

B. This is incorrect because the 138 KV switchyard is the normal supply for Unit 2. It is plausible because it is the alternate supply for Unit 1. Correct because neither unit has 2 offsite sources of power which requires entry into LCO for TS 3.8.1 for both units.

C. This is incorrect because both units meet the LCO entry requirement for TS 3.8.1. It is plausible because only Unit 2 lost its “Normal” power supply.

D. This is incorrect because both units fail to meet the LCO for TS 3.8.1. It is plausible because only one unit lost its “Normal” power supply.

Technical Reference: (Attach if not previously provided including revision number)	TS 3.8.1 Switchyard Study Guide, LO21.SYS.YD1

Proposed references to be provided to applicants during examination: _____

Learning Objective:	APPLY the administrative requirements of the Switchyard system including Technical Specifications, TRM and ODCM. (LO21.SYS.YD1.OB05)

Question Source:	Bank #		
	Modified Bank#		
	New	X	
Question History:	Last NRC Exam		
Question Cognitive Level	Memory or Fundamental Knowledge		X
	Comprehension or Analysis		
10 CFR Part 55 Content:	55.41	41.7	
	55.43	n/a	

3.8 ELECTRICAL POWER SYSTEMS

3.8.1 AC Sources -- Operating

LCO 3.8.1 The following AC electrical sources shall be OPERABLE:

a. Two qualified circuits between the offsite transmission network and the onsite Class 1E AC Electrical Power Distribution System;

b. Two diesel generators (DGs) capable of supplying the onsite Class 1E power distribution subsystem(s); and

c. Automatic load sequencers for Train A and Train B.

APPLICABILITY: MODES 1, 2, 3, and 4

----------NOTE----------
One DG may be synchronized with the offsite power source under administrative controls for the purpose of surveillance testing.

Normal Supply

6.9 KV SAFEGUARDS BUSES

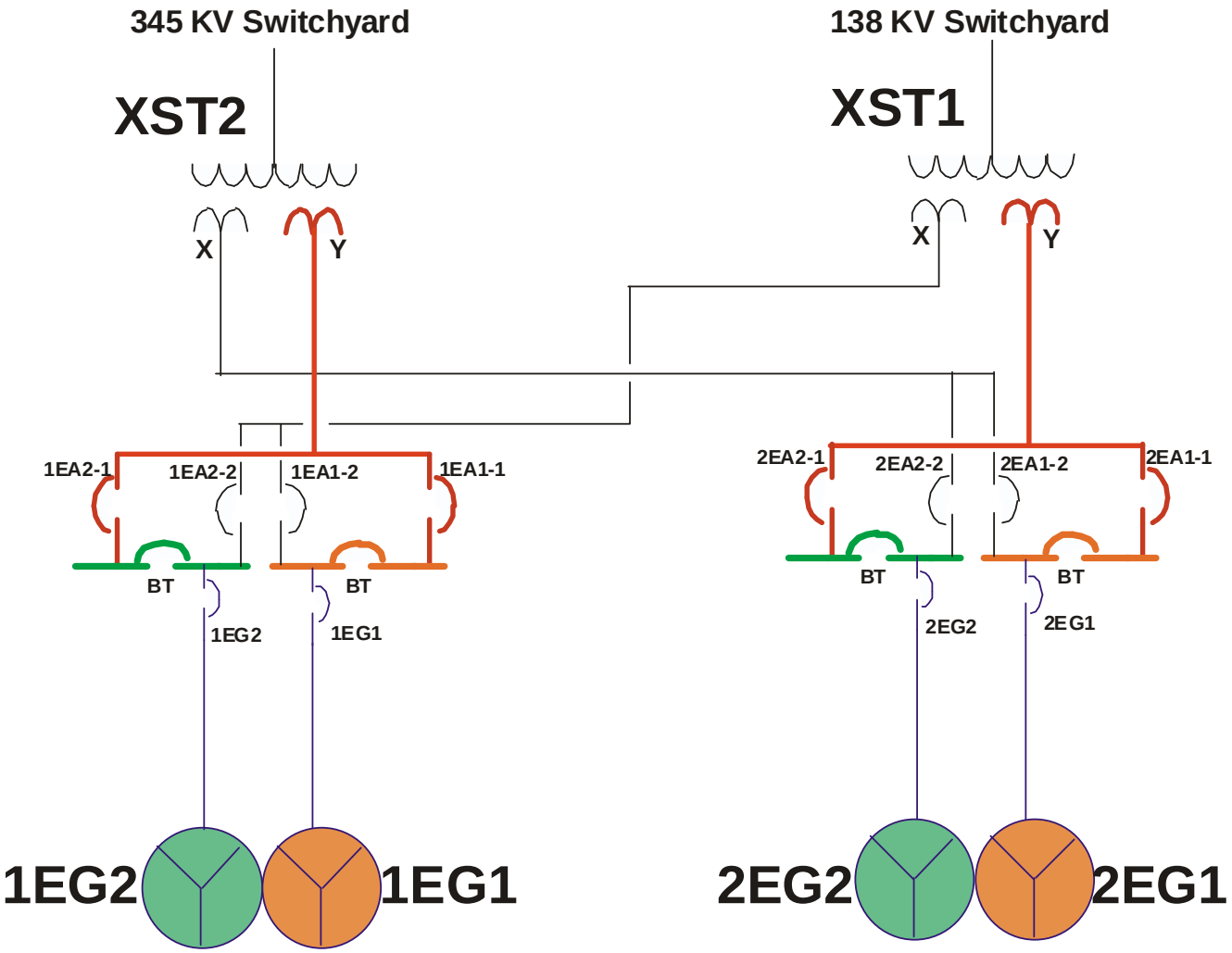

Back-up Supply

6.9 KV SAFEGUARDS BUSES

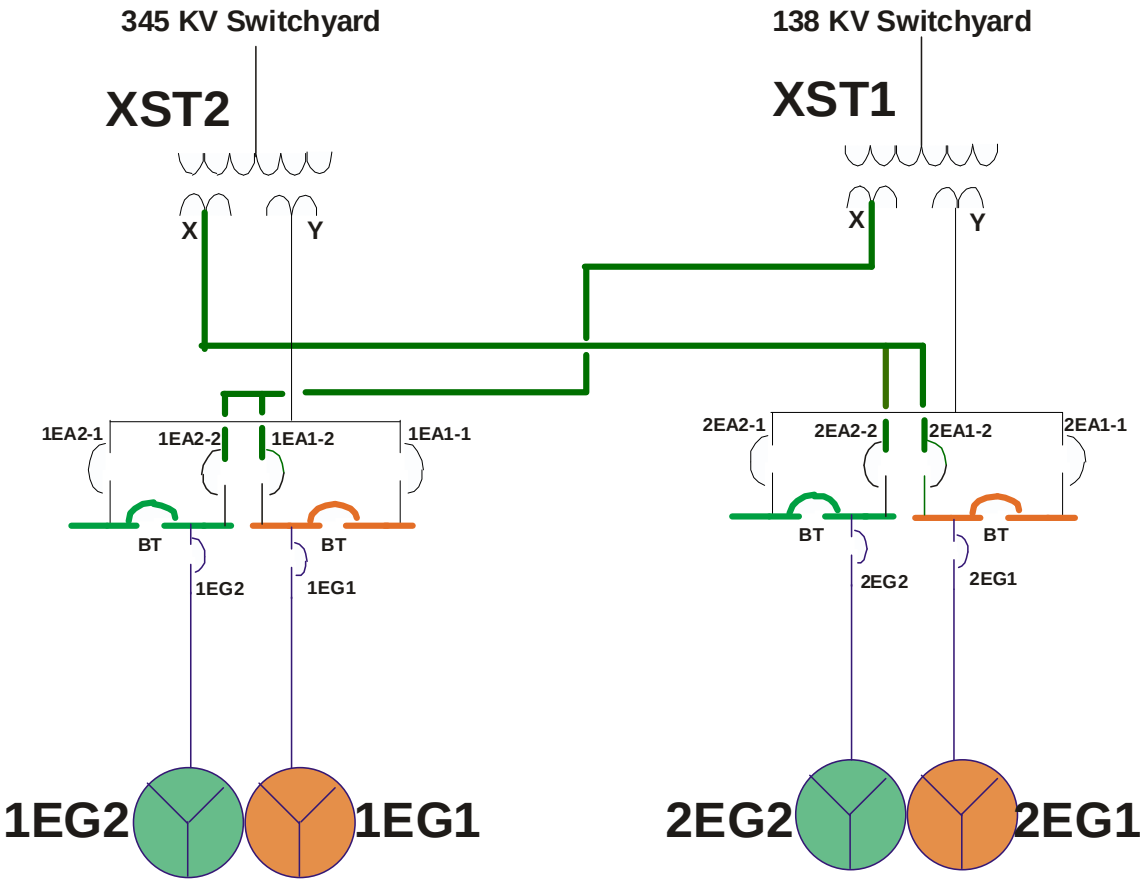

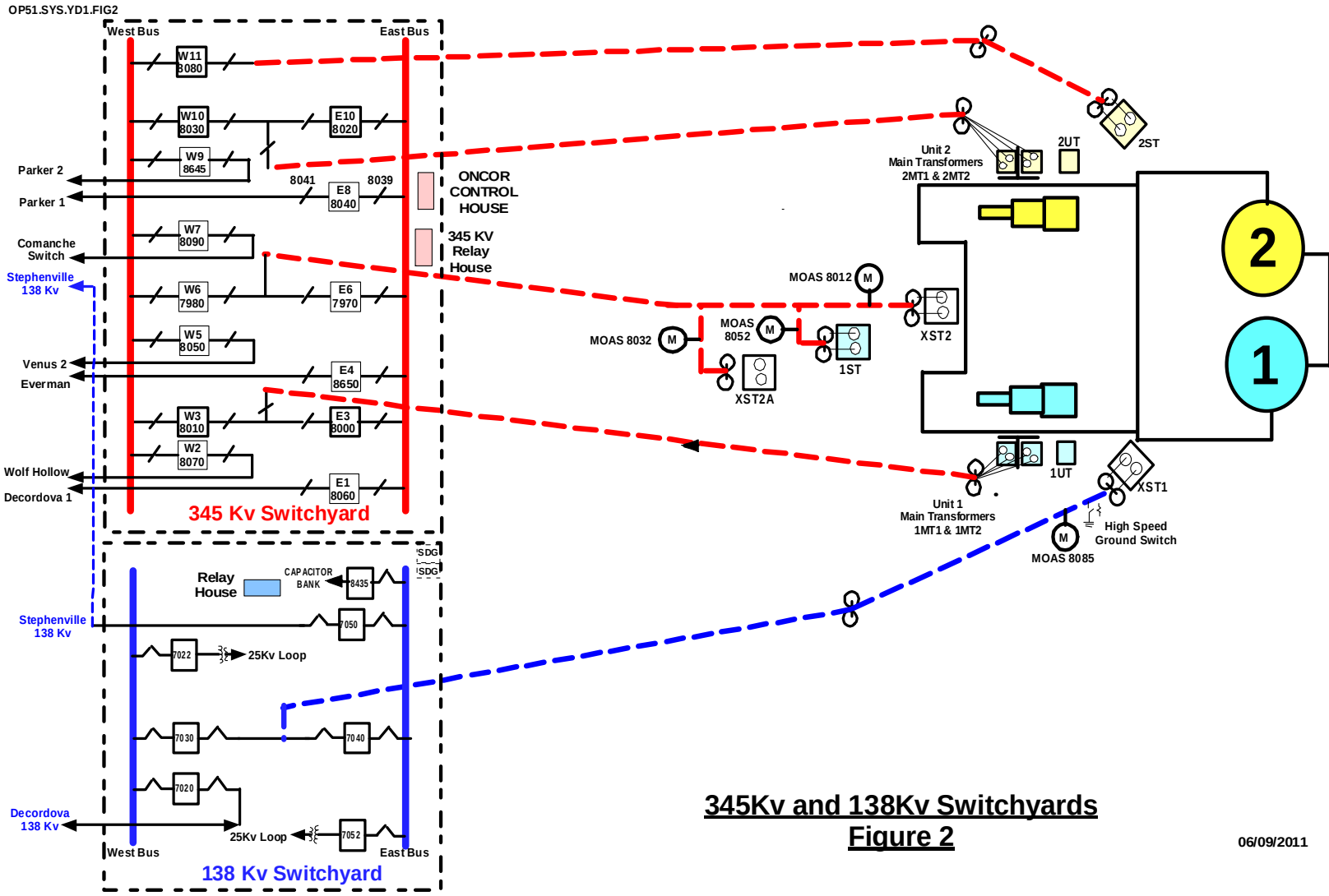

345Kv and 138Kv Switchyards
Figure 2

06/09/2011

Examination Outline Cross-Reference	Level	RO	SRO
Rev. Date: 1/6/2015	Tier #	2	n/a
Change: 2	Group #	1	n/a
	K/A #	057 AA2.16	n/a
Level of Difficulty: 2	Importance Rating	3.0	n/a

Loss of Vital AC Electrical Instrument Bus: Ability to determine and interpret the following as they apply to the Loss of Vital AC Instrument Bus: Normal and abnormal PZR level for various modes of plant operation.

Question 50

Unit 2 plant conditions:

- Reactor power = 80%
- 2-LK-459 PRZR Level Selector Switch is selected to 459/460
- 2PC2 de-energizes

Based on the above conditions, complete the following statements with regard to the effect of the loss of power?

1. ____(1)____ will close, isolating letdown.

2. Pressurizer reference level will ____(2)____.

A. (1) LCV-459
(2) increase

B. (1) LCV-459
(2) decrease

C. (1) LCV-460
(2) increase

D. (1) LCV-460
(2) decrease

Answer: D

The question matches the KA by requiring knowledge of how a loss of a vital instrumentation bus affects equipment associated with pressurizer level.

Explanation / Plausibility:

A. 1st part is incorrect because LCV-459 does not close due to a loss of power to 2PC2. It is plausible because LCV-460 does close. 2nd part is incorrect because reference level fails low. It is plausible because reference level does fail.

B. 1st part is incorrect but plausible (see A). 2nd part is correct.

C. 1st part is correct. 2nd part is incorrect but plausible (see A).

D. 1st part is correct. 2nd part is correct.

Technical Reference: (Attach if not previously provided including revision number)	208, 120 & 118 VAC Distribution Study Guide LO21.SYS. CS1

Proposed references to be provided to applicants during examination: _____

Learning Objective: RELATE operating experience with the 208/120 VAC, 118 VAC Distribution, Inverters and Lighting system operation. (LO21.SYS.AC3.OB09)

Question Source:	Bank #	
	Modified Bank#	
	New	X
Question History:	Last NRC Exam	
Question Cognitive Level	Memory or Fundamental Knowledge	
	Comprehension or Analysis	X
10 CFR Part 55 Content:	55.41	
	55.43	n/a

208, 120 & 118 VAC Distribution Study Guide

Loss of uPC2

Assuming the normal channels are selected for control, on a loss of uPC2:

Pressurizer Level Control- If the switch is selected to 459/460 or 461/460, then the failure of LT-460 will cause the LCV-460 to close and trip off the heater breakers.

If actual level goes less than 17%, LCV-459 will not close automatically. The reason LCV-459 won't close is because the NAS relay LY-459C has lost power. LY-459C energizes to isolate letdown, turn off the heaters and bring in the low level alarm when the selected controlling level channel goes < 17%. Without power, the failure or actual low level of the selected channel won't cause these actions.

If 459/460 or 459/461 is selected, then if the level goes >+5% from level ref, the pressurizer backup heaters will not turn on and the PRZR LVL DEV HI alarm will not come in. The NAS relay LC-459E energizes when the selected controlling channel is at +5% over Lref to cause the backup heaters to turn on and the PRZR LVL DEV HI alarm to come in. On a loss of power to uPC2 it is without power and can't cause these actions.

Level reference to the pressurizer level control scheme has also dropped due to the change to an Average Tave control signal. The failure of one Tave signal will lower the average Tave signal and therefore lower the Pressurizer level reference signal.

PIR 96-03 - REACTOR TRIP AND SAFETY INJECTION DUE TO LOSS OF IV1PC2

Description of the Event

At approximately 0801, on 1/17/96, the inverter IV1PC2 output circuit breaker (4CB) tripped due to an overload condition. This resulted in a loss of power to distribution panel 1PC2 which de-energized the main turbine first stage pressure transmitter (1PT-506). This condition allowed the steam dumps to be armed for the C-7, turbine loss of load relay. Operators then entered abnormal procedure ABN-603, "Loss of Protection or Instrument Bus." The Auxiliary Operator (AO) operated the manual transfer switch located on the bottom of instrument panel (1PC2) to transfer power from the inverter to the alternate power source from panel 1EC4. This resulted in the generation of a spike (high) on N16/Tave loop 2 circuitry, and created an error signal to the steam dumps with the C-7 arming signal present. With the steam dumps armed, and a momentary large difference between auctioneered high Tave and the reference temperature, all of the steam dump valves opened. The opening of the steam dumps caused a rapid increase in steam flow and corresponding rapid decrease in main steam line pressure, which resulted in the generation of the rate compensated main steam line pressure low Safety Injection and reactor trip. The plant responded as expected to the SI, including a reactor trip with main steam isolation valve closure and all control rods inserted into the core. The emergency core cooling systems started per design, and injected into the reactor coolant system. Injection was terminated approximately 15 minutes following the SI in accordance with the emergency operating procedures.

Operators activated a manual turbine trip due to indication of an incomplete turbine trip. 1-LCV-459 was manually closed (remember that loss of power to NAS relay LY-459C would keep it

from going closed even if there was a low level on a loss of 1PC2, and the LT-460 failure caused 1-LCV-460 to close on the loss of 1PC2 because 459/460 was selected) and one feed water isolation valve, 1-HV-2135, was in the intermediate position which required use of the hand switch to close. The plant computer locked up at 0801, but operators did not recognize the loss of the computer until approximately 0818, due to the large number of actions being performed. Source range instruments automatically energized and the SI/SI sequencer was reset. Steam Generator 3 (channel II) level instrument failed low; channel II board failures occurred on the N-16; main steam line channel II and pressure and pressurizer level channels also failed. Steam Generator levels, auxiliary feed water flow and RCS temperature were maintained utilizing the steam generator atmospheric relief valves. Decay heat removal was accomplished utilizing the steam generator atmospheric relief valves, and the plant was then stabilized in Mode 3.

CLASS 1E 118 VAC INVERTERS

Comanche Peak uses 10 KVA inverters built by Solidstate Controls, Inc. (SCI) to supply the Class 1E 118 VAC Vital buses. The five Class 1E inverters for each train are located in their respective unit and train UPS and Distribution Room in the Electrical Control Building, 792' elevation. **See Figures 9, 10 & 11.**

CLASS 1E 118 VAC INVERTERS

UNIT	TRAIN	INVERTER	TYPE	DC INPUT	BYP SOURCE	OUTPUT
1	A	IV1PC1	REACTOR PROTECTION (SCI 10KVA)	1ED1	1EC3	1PC1
		IV1PC3	REACTOR PROTECTION (SCI 10KVA)	1ED3	1EC3	1PC3
		IV1EC1	SAFEGUARD BOP (SCI 10KVA)	1ED1	1EC3	1EC1
		IV1EC3	SAFEGUARD BOP (SCI 10KVA)	1ED3	1EC3	1EC5
		IV1EC1/3	INSTALLED SPARE (SCI 10KVA)	1ED1/1ED3	1EC3	ANY UNIT 1 TR A
	B	IV1PC2	REACTOR PROTECTION (SCI 10KVA)	1ED2	1EC4	1PC2
		IV1PC4	REACTOR PROTECTION (SCI 10KVA)	1ED4	1EC4	1PC4
		IV1EC2	SAFEGUARD BOP (SCI 10KVA)	1ED2	1EC4	1EC2
		IV1EC4	SAFEGUARD BOP (SCI 10KVA)	1ED4	1EC4	1EC6
		IV1EC2/4	INSTALLED SPARE (SCI 10KVA)	1ED2/1ED4	1EC4	ANY UNIT 1 TR B
2	A	IV2PC1	REACTOR PROTECTION (SCI 10KVA)	2ED1	2EC3	2PC1
		IV2PC3	REACTOR PROTECTION (SCI 10KVA)	2ED3	2EC3	2PC3
		IV2EC1	SAFEGUARD BOP (SCI 10KVA)	2ED1	2EC3	2EC1
		IV2EC3	SAFEGUARD BOP (SCI 10KVA)	2ED3	2EC3	2EC5
		IV2EC1/3	INSTALLED SPARE (SCI 10KVA)	2ED1/2ED3	2EC3	ANY UNIT 2 TR A
	B	IV2PC2	REACTOR PROTECTION (SCI 10KVA)	2ED2	2EC4	2PC2
		IV2PC4	REACTOR PROTECTION (SCI 10KVA)	2ED4	2EC4	2PC4
		IV2EC2	SAFEGUARD BOP (SCI 10KVA)	2ED2	2EC4	2EC2
		IV2EC4	SAFEGUARD BOP (SCI 10KVA)	2ED4	2EC4	2EC6
		IV2EC2/4	INSTALLED SPARE (SCI 10KVA)	2ED2/2ED4	2EC4	ANY UNIT 2 TR B

Table 1

Each Class 1E inverter cabinet houses indications, alarms, static switch control, switches and breakers to align its power sources and output. **See Figures 12 & 13.**

118 VAC Vital bus inverters, uPC1, uPC2, uPC3, uPC4, uEC1, uEC2, uEC3, and uEC4 have 3 breakers on their front face:

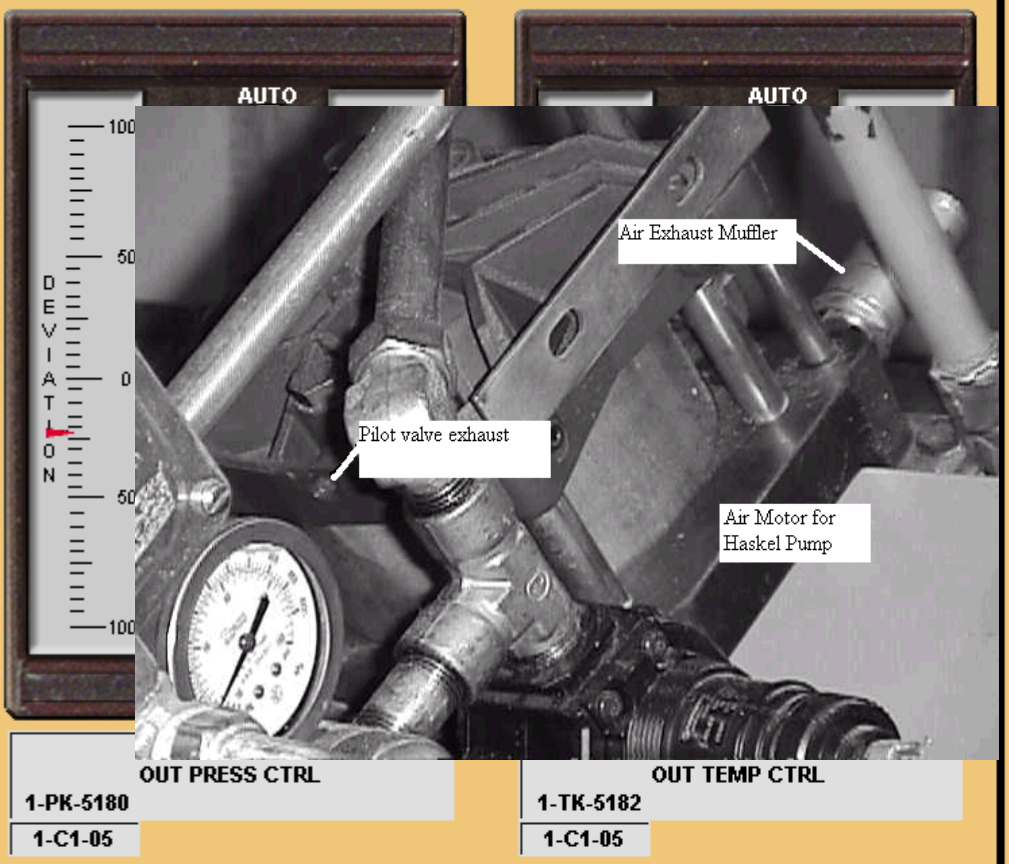
AUTO
DEVIATION
100
50
0
50
100
Air Exhaust Muffler
Pilot valve exhaust
Air Motor for
Haskel Pump
OUT PRESS CTRL
1-PK-5180
1-C1-05
AUTO
OUT TEMP CTRL
1-TK-5182
1-C1-05

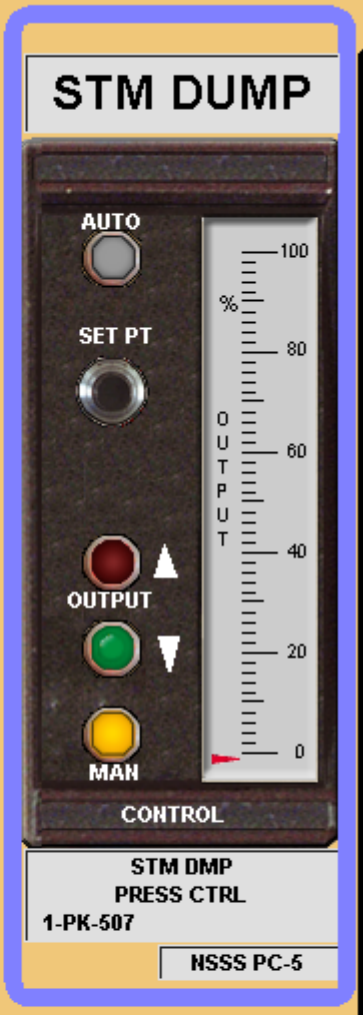
STM DUMP
AUTO
SET PT
OUTPUT
MAN
CONTROL
%
OUTPUT
100
80
60
40
20
0
STM DMP
PRESS CTRL
1-PK-507
NSSS PC-5


AUTO
SET PT
OUTPUT
MAN
MASTER
1-SK-509A
NSSS PC-5

Examination Outline Cross-Reference	Level	RO	SRO
Rev. Date: 1/6/2015	Tier #	1	n/a
Change: 2	Group #	1	n/a
	K/A #	058 G2.1.7	n/a
Level of Difficulty: 2	Importance Rating	4.4	n/a

Loss of DC Power: Ability to evaluate plant performance and make operational judgments based on operating characteristics, reactor behavior, and instrument interpretation.

Question 51

Unit 1 plant conditions:

- Reactor power = 50%
- BC1ED1-1 is in service `
- An operator reports that BC1ED1-1's DC Voltmeter indicates 125 VDC

Based on the above plant conditions, which ONE of the following is correct

A. Voltage is reading too low and BC1ED1-2 should be placed in service. BC1ED1-2 should be placed service before BC1ED1-1 is removed from service.

B. Voltage is reading too low and BC1ED1-2 should be placed in service. BC1ED1-2 cannot be placed service before BC1ED1-1 is removed from service.

C. Voltage is reading correctly and BC1ED1-1 can remain in service. If it were desirable to swap battery chargers, BC1ED1-2 should be placed in service first, then BC1ED1-1 could be taken out of service.

D. Voltage is reading correctly and BC1ED1-1 can remain in service. If it were desirable to swap battery chargers, BC1ED1-1 would have to be taken out of service first, then BC1ED1-2 could be placed in service.

Answer: B

This question matches the KA by requiring the ability to evaluate plant information and determine a course of action.

Explanation / Plausibility:

A. 1st part is correct. Normal voltage is 128-135 VDC. In the battery charger trouble alarm (attached), it states that if voltage is less than the normal band, the standby charger should be placed in service. 2nd part is incorrect because an interlock prevents paralleling chargers. It is plausible because while switching chargers, there is some period of time where no charger is aligned to the DC bus which is an abnormal lineup.

B. 1st part is correct. 2nd part is correct.

C. 1st part is incorrect because voltage is low. It is plausible because it is the 125 VDC safeguards system. 2nd part is incorrect but plausible (see A).

D. 1st part is incorrect but plausible (see A). 2nd part is correct.

Technical Reference: (Attach if not previously provided including revision number)	DC Electrical Distribution Study Guide 1ALB-10B

Proposed references to be provided to applicants during examination: _____

Learning Objective: EXPLAIN the normal, abnormal and emergency operation of the DC Electrical Distribution system. (LO21.SYS.DC1.OB04)

Question Source:	Bank #	
	Modified Bank#	
	New	X
Question History:	Last NRC Exam	
Question Cognitive Level	Memory or Fundamental Knowledge	
	Comprehension or Analysis	X
10 CFR Part 55 Content:	55.41	41.5
	55.43	n/a

125 VDC SAFEGUARDS DISTRIBUTION

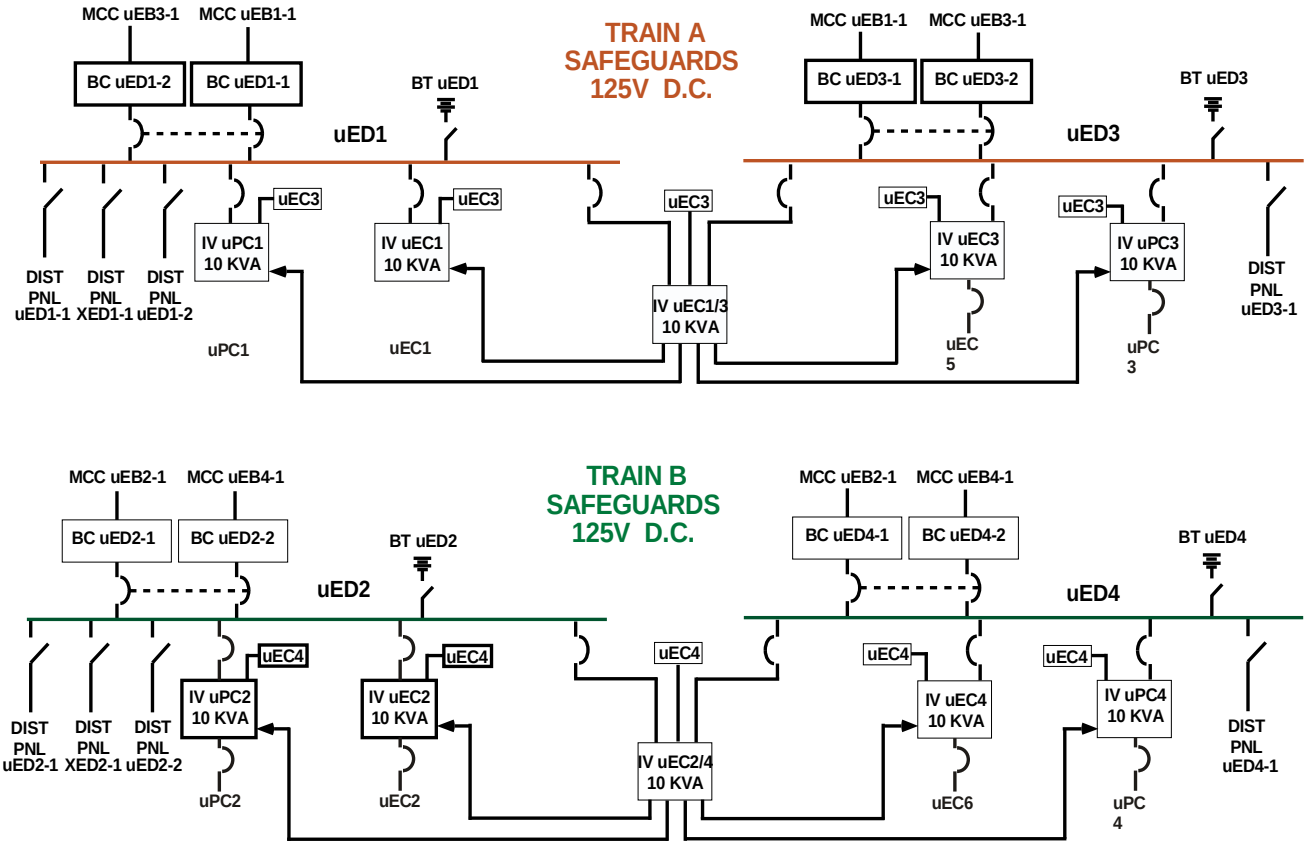

OP51.SYS.DC1.FG02

03-31-09

DC ELECTRICAL DISTRIBUTION

CLASS 1E 125 VOLT BATTERY SYSTEM (FIGURE 2)

The 125 volt safeguards battery system for each plant consists of four 125 VDC batteries (BTuED1, BTuED2, BTuED3, BTuED4), eight 125 VDC battery chargers (BCuED1-1, BCuED1-2, BCuED2-1, BCuED2-2, BCuED3-1, BCuED3-2, BCuED4-1, BCuED4-2) and four 125 VDC busses (uED1, uED2, uED3, uED4) divided into two trains. Train A consists of busses uED1 and uED3. Train B consists of busses uED2 and uED4. These busses provide power to safeguards inverters. The safeguards inverters IVuPC1, IVuPC2, IVuPC3, IVuPC4, IVuEC1, IVuEC2, IVuEC3, IVuEC4, IVuEC1/3 and IVuEC2/4 provide 118 VAC to the Solid State Protection System, Safety Injection and Blackout Sequencers, and process controls.

The DC distribution panels provide power to loads such as:

- 6.9 KV and 480 VAC Safety-related breaker control power
- HVAC Panel CV-01 for solenoid operated dampers
- EDG engine/generator control
- Reactor Trip Switchgear for shunt trip power
- SSPS Cabinets for Steam Dump valve solenoid power
- Power for numerous air operated and solenoid operated valves

The system is required to provide a minimum and maximum system voltage of 105 to 140, respectively, under all plant conditions. Each bus consists of a battery, two battery chargers capable of charging the battery while supplying the normal operating loads, and a main 125 volt DC switchboard. The battery is capable of carrying its essential loads continuously for a period of 4 hours should a total loss of AC power occur. There is a 1950 amp hour capacity for BTuED1 and BTuED2 and a 1200 amp hour capacity for BTuED3 and BTuED4 at an eight hour discharge rate.

Two battery charger units on each Class 1E 125 VDC bus provide a means for maintaining their respective battery fully charged. Normally one battery charger is in operation maintaining the battery in a "float" condition (128 VDC to 135 VDC), and the other charger is a standby spare. A circuit breaker for each battery charger connects the battery charger to the DC switchboard and ultimately to the charger's respective battery. Each battery charger is required to be able to continuously supply all steady state loads while also recharging the battery from the design minimum charged state to the fully charged state within 24 hours. Voltage regulation is required to be ± 1/2 percent from no load to full load. A mechanical interlock (sliding bar) prevents closing more than one battery charger bus feeder breaker at a single time. This prevents paralleling the two chargers to the battery simultaneously.

ANNUNCIATOR NOM./NO.: **BATT CHRG BC1ED1-1/BC1ED1-2 TRBL** **1.14**

PROBABLE CAUSE:

Loss of AC input to battery charger
In service Battery charger malfunction
Both 125 VDC bus supply breakers open

AUTOMATIC ACTIONS: None

> NOTE: Battery charger output is limited to approximately 330 amps by an internal current limiter. WHEN large loads are started with charger supplying bus alone, THEN current limiter will allow switchboard voltage to drop. This condition should correct itself when component starting current decays. This current limiting condition could also occur while charging a discharged battery.

OPERATOR ACTIONS:

[C]

> CAUTION: IF panel board voltage drops below 128 VDC during subsequent actions, THEN TS 3.8.4, 3.8.5, AND 3.8.6 should be reviewed for applicability. Should voltage drop below 105 volts, safeguard switchgear trip AND close coils may no longer function.

1. MONITOR V-1ED1, 125 VDC SWITCH PNL 1ED1 VOLT AND A-BT1ED1, BATT BT1ED1 CURRENT.

2. REFER to TS 3.8.4, 3.8.5, 3.8.6, 3.8.9, AND 3.8.10.

3. DISPATCH an operator to ECB 792 safeguard battery charger room to determine AND correct cause of alarm condition.
   A. IF AC POWER FAILURE light is on at battery charger,
      THEN
      PERFORM the following:
      1) VERIFY AC INPUT breaker at front of battery charger is ON.
      2) IF BC1ED1-2 is the affected battery charger AND aligned from 1EB3-1,
         THEN
         VERIFY the following:
         - 1EB3-17S, Transfer Switch, is in 1E
         - Right-most breaker inside transfer switch panel indicates closed

ANNUNCIATOR NOM./NO.: **BATT CHRG BC1ED1-1/BC1ED1-2 TRBL** **1.14**

OPERATOR ACTIONS: Continued

NOTE: An "IV" is only required if the breaker must be closed.

3. A. 3) VERIFY 480 volt supply breaker to affected battery charger is ON.
   [IV] • BC1ED1-1 1EB1-1/2M/BKR
   [IV] • BC1ED1-2 1EB3-1/9B/BKR
   4) IF BC1ED1-2 is aligned to Outage Power,
   THEN
   PERFORM the following:
   • VERIFY AC INPUT breaker at front of battery charger is ON.
   • VERIFY 1EB3-17S Transfer Switch is in NON 1E AND left-most breaker inside transfer switch panel indicates closed.
   • VERIFY 1B10-1-3-1/02/BKR is ON.

NOTE: WHEN the battery is realigned to the bus following a test discharge, THEN LOW DC VOLTAGE light may be on until bus voltage is restored above 120 VDC.

B. IF LOW DC VOLTAGE light is on at battery charger,
THEN
PERFORM the following.
1) VERIFY FLOAT light (green) is ON.
2) VERIFY DC OUTPUT breaker is ON.
3) VERIFY DC OUTPUT current is <330 amps.

C. IF FAN FAILURE light is on at battery charger,
THEN
CONTACT Maintenance to check the following fuses inside the affected battery charger cabinet:
• F306, F307 - Fan M301
• F308, F309 - Fan M302

Examination Outline Cross-Reference	Level	RO	SRO
Rev. Date: 1/6/2015	Tier #	1	n/a
Change: 2	Group #	1	n/a
	K/A #	062 AK3.04	n/a
Level of Difficulty: 3	Importance Rating	3.5	n/a

Loss of Nuclear Service Water: Knowledge of the reasons for the following responses as they apply to the Loss of Nuclear Service Water: Effect on the nuclear service water discharge flow header on a loss of CCW.

Question 52

Unit 1 plant conditions:

- Reactor power = 60%
- SSW Pump 1-01 is operating
- SSW Pump 1-02 is in standby following a discharge valve function stroke test
- SSWP 1/2 DISCH PRESS LO alarms
- ABN-501 STATION SERVICE WATER SYSTEM MALFUNCTION is initiated

Based on the above plant conditions, which ONE of the following is correct?

1. The non affected train CCW pump ____(1)____ automatically start.

2. Per ABN-501, the concern with leaving the affected train CCW pump operating is that ____(2)____.

   A. (1) will
      (2) if left running, it will continue to apply an auto-start signal to the affected train SSW pump

   B. (1) will
      (2) it will continue to heat up the CCW/SSW heat exchanger creating thermal stress across the tubes

   C. (1) will NOT
      (2) if left running, it will continue to apply an auto-start signal to the affected train SSW pump

   D. (1) will NOT
      (2) it will continue to heat up the CCW/SSW heat exchanger creating thermal stress across the tubes

Answer: A

This question matches the KA by requiring knowledge of the reasons for actions contained in the ABN when SSW malfunctions.

Explanation / Plausibility:

A. 1st part is correct. The SSW low pressure alarm will automatically start the non-affected trains SSW pump and CCW pump. 2nd part is correct.

B. 1st part is correct. 2nd part is incorrect because the temperature differences are not significant enough to create a concern (not mentioned in the ABN). It is plausible because the heat exchanger is idle.

C. 1st part is incorrect because the non affected train CCW pump will start. It is plausible because the CCW pump start signal does not come from the SSW low pressure alarm. 2nd part is correct.

D. 1st part is incorrect but plausible (see C). 2nd part is incorrect but plausible (see B).

Technical Reference: (Attach if not previously provided including revision number)	Station Service Water Study Guide ABN-501 Station Service Water System Malfunction

Proposed references to be provided to applicants during examination: _____

Learning Objective: DISCUSS ABN-501, "Station Service Water System Malfunctions", to include the following:
1)Applicability
2)Symptoms
3)Plant Indications
4)Automatic Actions
5)Initial Operator Actions
(LO21.SST.SW1.OB04)

Question Source:	Bank #		
	Modified Bank#		
	New	X	
Question History:	Last NRC Exam		
Question Cognitive Level	Memory or Fundamental Knowledge		
	Comprehension or Analysis		X
10 CFR Part 55	55.41	41.4	

Content:

55.43	n/a

Interlocks

A SSW pump will start automatically on low header pressure in the opposite safety related loop or when the train associated component cooling water pump is started (**Figure 8**).

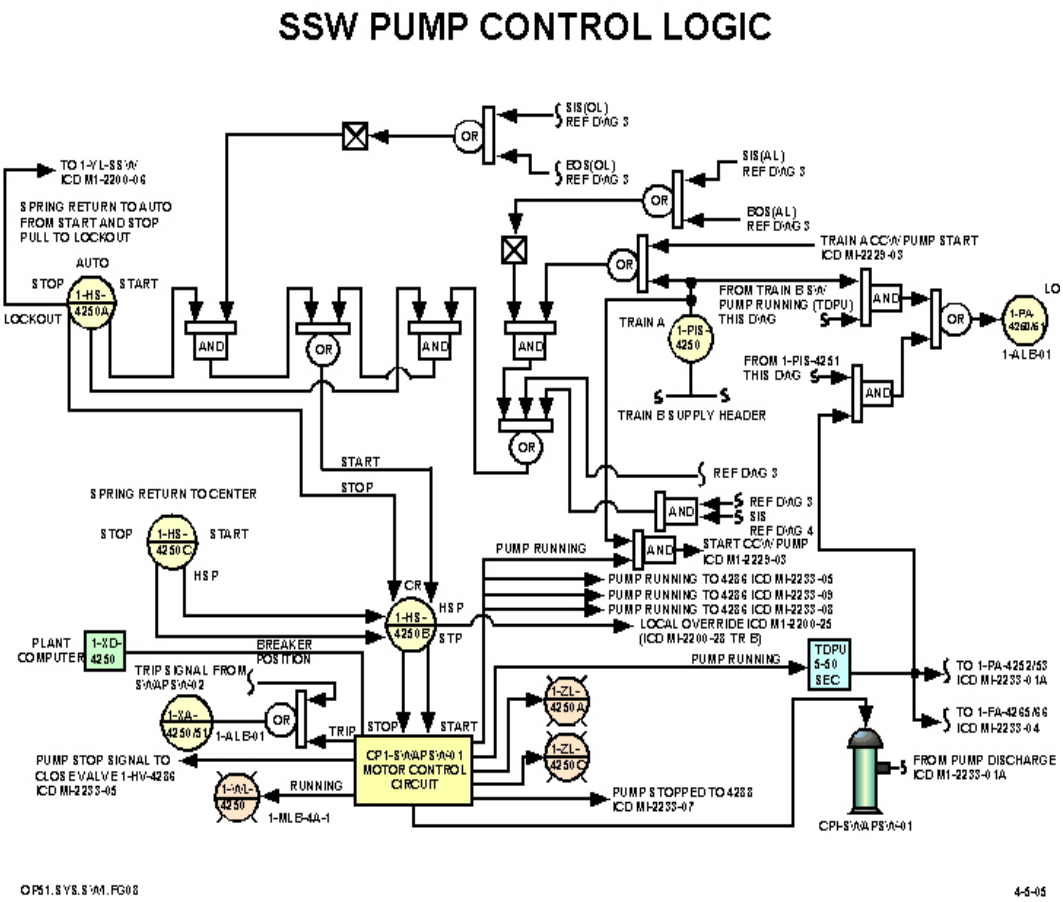

Figure 8 - SSW Pump Control Logic

The SSW pumps and the CCW pumps are train associated pumps. Both pumps receive an automatic start signal on a "BO" or "SI" signal.

A blackout will sequence the SSW pumps onto their respective buses.

The low pressure start signal will occur if PIS-4250, on the 10" safety related header, reaches 10 psig with Train B pump in service or PIS-4251, on the 10" safety related header, reaches 10 psig with Train A pump in service.

COMPONENT COOLING WATER STUDY GUIDE

CCW PUMPS

The CCW pumps are located on the centerline of the Auxiliary Building, elevation 810'. They are 100% capacity, centrifugal, horizontal, double suction, single stage, motor-driven pumps with a nominal capacity of 14,700 gpm each at a head of 226 ft. The shafts have minimum leakage mechanical seals cooled by the discharge of the pump. The journal and thrust bearings are self-lubricated by oil rings.

The pumps are normally powered from uEA1 and uEA2. On a loss of power, they will be supplied from the train related emergency diesel generator. Control power for the pumps is from uED1-2 for Train A and uED2-2 for Train B.

Each pump is equipped with local, direct reading suction and discharge pressure gauges. There is also a pressure transmitter on the discharge of the pump that provides indication in the control room and inputs to the plant computer.

The pumps are controlled from the control room on u-CB-03. After control is transferred, the pumps may be controlled at the Hot Shutdown Panel (HSP). (The HSP is also referred to as the Remote Shutdown Panel (RSP.) When control is transferred to the HSP, an alarm is generated in the control room and all automatic starts are bypassed.

The CCW pump will receive an automatic start signal from:

- Safety Injection Sequencer
- Blackout Sequencer
- Low discharge pressure on the running train of CCW
- An AUTO start of the associated train SSW pump on low pressure in the alternate SSW train.

On the start of a CCW pump, the train related SSW pump and the train associated safety chiller receive a start signal. The room cooler for the CCW pump will also start.

OP51.SYS.SW1.FIG1

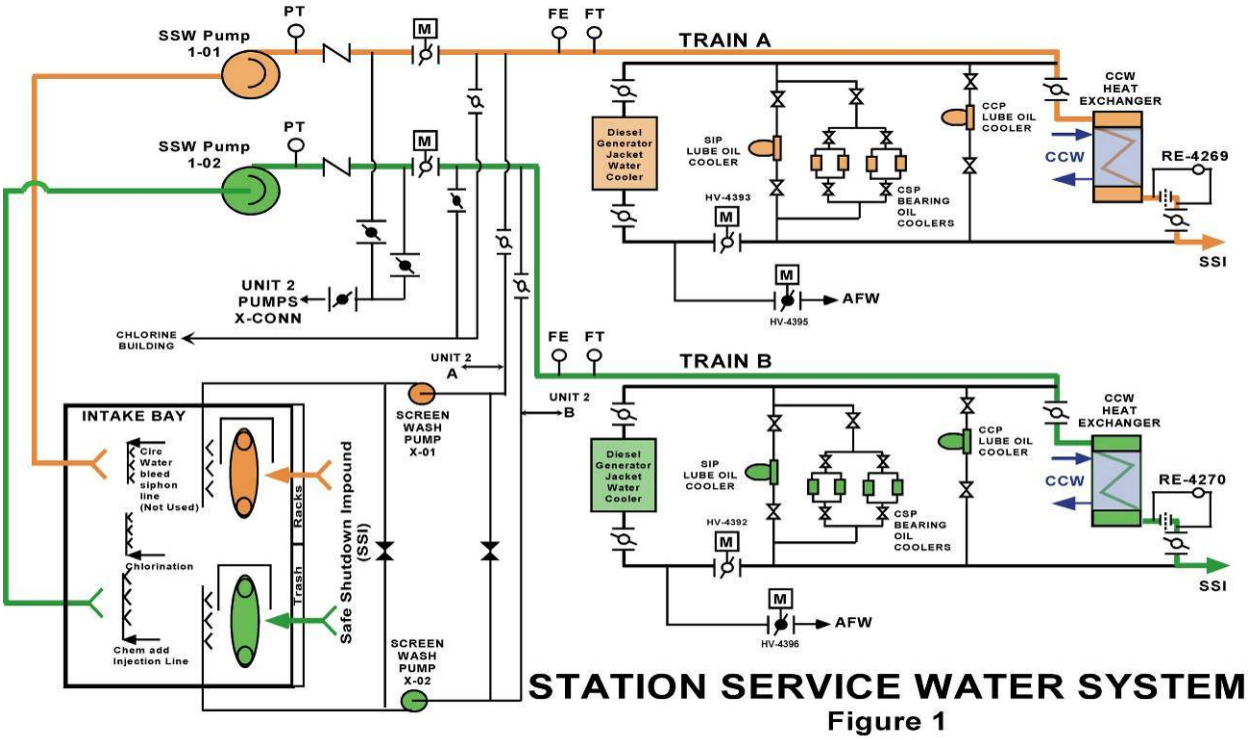

STATION SERVICE WATER SYSTEM

Figure 1

4-21-2008

ANNUNCIATOR NO.: **1.7**

LOGIC:

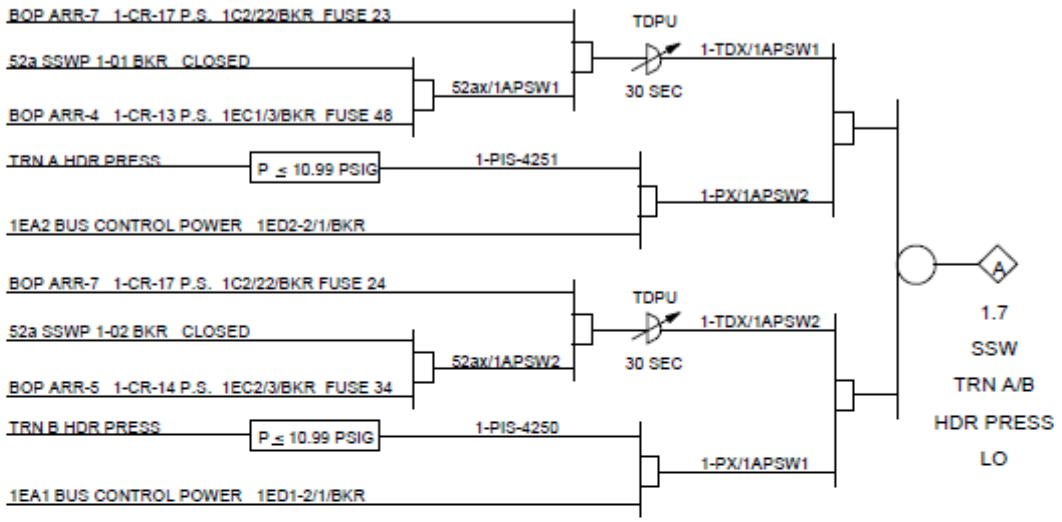

PLANT COMPUTER:

F6258A SSWP 1 DISCH FLO

P3251A SSWP 1 DISCH PRESS

LOCAL INSTRUMENTS:

1-PIS-4251 UNIT 1 SSW TRAIN A SUPPLY HEADER PRESSURE INDICATING SWITCH
1-PIS-4250 UNIT 1 SSW TRAIN B SUPPLY HEADER PRESSURE INDICATING SWITCH

REFERENCES:

CP-0010-001 Station Service Water Pumps	E1-0031	Sh.41, 43
	E1-0043	Sh.26, 27

ANNUNCIATOR NOM./NO.: **SSW TRN A/B HDR PRESS LO** **1.7**

PROBABLE CAUSES:

Operating SSW pump malfunction
10" Safeguard loop out of service
System startup

AUTOMATIC ACTIONS:

The standby SSW pump AND associated CCW pump starts.

OPERATOR ACTIONS:

1. DETERMINE affected SSW pump:
   - 1-HS-4250A, SSWP 1
   - 1-HS-4251A, SSWP 2

   A. IF an SSW pump tripped,
      THEN
      REFER to ABN-501 for Station Service Water Pump Trip.

   B. IF Train A/B header pressure is low,
      THEN
      REFER to ABN-501 for Station Service Water Header Pressure Low.

2. WITH an SSW pump in service,
   THEN
   VENT the 10 inch safeguard header per SOP-501A for Filling AND Venting to clear alarm condition.

3. CORRECT the condition OR INITIATE a CR per STA-421, as applicable.

3.3 Operator Actions

ACTION/EXPECTED RESPONSE	RESPONSE NOT OBTAINED

NOTE: The CCW Pump on the affected train may be left operating at the discretion of the Shift Manager. However, with this pump operating, the affected SSW Pump will have an Auto Start Signal to it.

☐ 4 Verify equipment in the affected Train - NOT REQUIRED FOR OPERATION:

- CCP
- Diesel Generator
- CCW Pump
- SI Pump
- Containment Spray Pumps

Start equipment in the unaffected Train as required to support Plant Operations:

- CCP
- Diesel Generator
- CCW Pump
- SI Pump
- Containment Spray Pumps

NOTE:
- The diesel generator can be operated, with load, for approximately one minute without SSW flow and not affect diesel performance.
- When a fault exists on the 6.9KV safeguard bus, the SSW pump will not be running to supply cooling water to the DG. The time this condition exists should be minimized (approximately 15 minutes) to prevent damage to the DG.

☐ 5 Shutdown equipment in the affected Train as follows:

☐ • CCP - PULL OUT

☐ • Diesel Generator - place CS-uDGuE (emergency stop/start) in PULLOUT.

☐ • SI Pump - PULL OUT

☐ • Containment Spray Pumps - PULL OUT

☐ • SSW Pump - PULL OUT

Examination Outline Cross-Reference	Level	RO	SRO
Rev. Date: 1/6/2015	Tier #	1	n/a
Change: 2	Group #	1	n/a
	K/A #	W/E04 EK2.1	n/a
Level of Difficulty: 3	Importance Rating	3.5	n/a

LOCA Outside Containment: Knowledge of the interrelations between the (LOCA Outside Containment) and the following: Components, and functions of control and safety systems, including instrumentation, signals, interlocks, failure modes, and automatic and manual features.

Question 53

Unit 1 plant conditions:

- Reactor Power = 100%
- RCP 1 Seal Water Injection Valve 1-8351A ruptures
- The check valve in the line between the valve and the RCP does not seat properly
- The leak is approximately 150 gpm

Based on the above plant conditions, which ONE of the following is correct assuming no operator actions?

A. Safety Injection will occur due to High containment pressure and when initiated, CCP flow will be limited by CCP Flow Control Valve 1-FCV-0121.

B. Safety Injection will occur due to High containment pressure and when initiated, CCP flow will NOT be limited by CCP Flow Control Valve 1-FCV-0121.

C. Safety Injection will occur due to Low RCS pressure and when initiated, CCP flow will be limited by CCP Flow Control Valve 1-FCV-0121.

D. Safety Injection will occur due to Low RCS pressure and when initiated, CCP flow will NOT be limited by CCP Flow Control Valve 1-FCV-0121.

Answer: D

This question matches the KA by requiring knowledge of the design and features of the CVCS during an LOCA outside containment.

Explanation / Plausibility:

A. 1st part is incorrect because the SI would occur due to LO RCS pressure. The ruptured valve is outside containment. It is plausible because if the check valve were the valve that ruptured, the leak would be inside containment. 2nd part is incorrect because when the SI occurs, the SI valves are upstream of FCV-121. It is plausible because FCV-121 does maintain flow constant during normal operations.

B. 1st part is incorrect but plausible (see A). 2nd part is correct.

C. 1st part is correct. 2nd part is incorrect but plausible (see A).

D. 1st part is correct. 2nd part is correct.

Technical Reference: (Attach if not previously provided including revision number)	CVCS Study Guide

Proposed references to be provided to applicants during examination: _____

Learning Objective: EXPLAIN the normal, abnormal and emergency operation of the Chemical and Volume Control system. (LO21.SYS.CS1.OB04)

Question Source:	Bank #	
	Modified Bank#	
	New	X
Question History:	Last NRC Exam	
Question Cognitive Level	Memory or Fundamental Knowledge	
	Comprehension or Analysis	X
10 CFR Part 55 Content:	55.41	41.7
	55.43	n/a

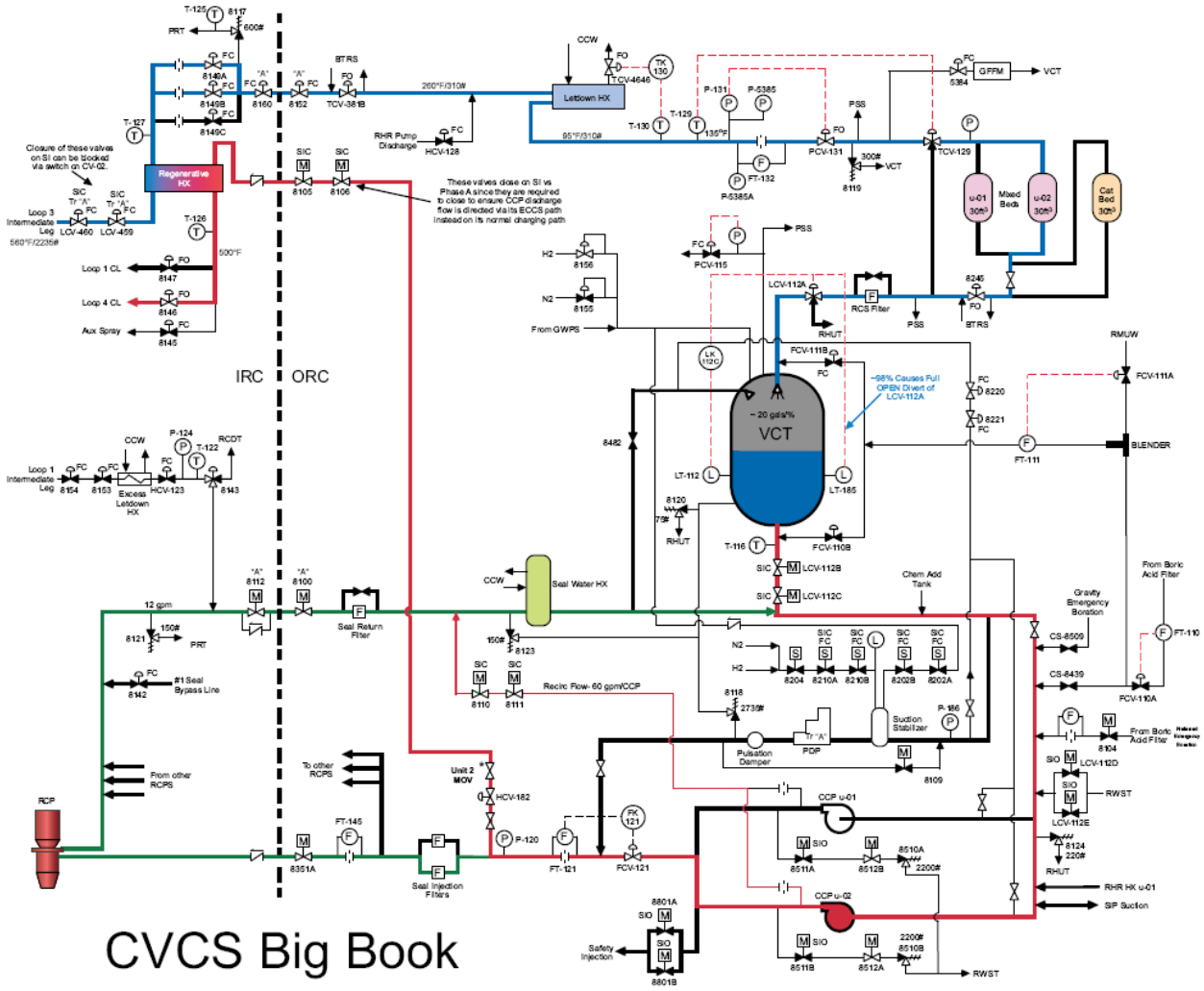

CVCS Big Book

CVCS STUDY GUIDE

\RCP SEAL WATER INJECTION VALVES

RCP u-01 through u-04 Seal Water Injection Valves, u-8351A, u-8351B, u-8351C, and u-8351D are motor operated isolation valves on each seal injection line in the north and south penetration rooms on the 810 foot elevation of the safeguards building, just before each line enters the containment building. The valves are powered from Train B safeguards bus Class 1E Motor Control Center uEB2-1.

These valves are controlled from three position (CLOSE, [unlabeled center position], OPEN) switches on CB-05. The switches spring return to the center position from either the CLOSE or OPEN positions.

These valves are normally open and there are no automatic signals which will re-position the valves. Position indication is provided at CB-05 and open-only position indication is available at the remote shutdown panel on Monitor Light Box u-MLB-63.

A trip of the motor thermal relay (49 device) on any of these motor operators will actuate the SFGD BLDG MCC uEB2-1/uEB4-2 ANY MOV OVRLOAD alarm on CB-11.

CENTRIFUGAL CHARGING PUMP FLOW CONTROL

Charging Flow Element u-FE-0121 is located on the combined charging pump discharge header in the charging pump valve room. It provides the differential pressure which is related to charging flow to Charging Pump Discharge Flow Transmitter u-FT-0121 (located, for Unit 1, in the boric acid storage tank room and, for Unit 2, in the Unit 2 CVCS valve operating room on the 822 foot elevation of the auxiliary building. The flow transmitter functions to generate a current signal which is proportional to charging header flow (from 0 to 270 gpm) for indication and control of charging flow. Charging Flow Indicators u-FI-0121A and u-FI-0121B (0 to 270 gpm) are located on CB-06 and at the remote shutdown panel, respectively. Charging flow is provided as an input to the plant computer. The CHG FLO HI/LO alarm on CB-06 also receives its inputs from the charging flow transmitter and is set to actuate at $\geq$ 150 gpm and at $\leq$ 55gpm.

The discharge flow from the centrifugal charging pumps to the normal charging header and to the reactor coolant pump seal injection lines is controlled by regulating the position of CCP u-01/u-02 Charging Flow Control Valve, u-FCV-0121, located in the charging pump valve room. This valve is air operated, and fails open on loss of air or control power.

The current to pneumatic converter for the positioner for u-FCV-0121 receives its control signal from CCP Charging Flow Controller u-FK-0121, a M/A station on CB-06. In MANUAL, the controller output can be varied from 0 to 100%. In AUTO, the controller adjusts its output based on the error between the actual flow from u-FT-0121 and a setpoint from the pressurizer level control system. The controller, in AUTO, limits valve position to allow a minimum of 55 gpm through the valve.

The charging flow control station can be selected to the control room or to the remote shutdown panel by operation of the two position (CR, HSP) Charging Flow Control Transfer Switch 43/u-0121FT in the shutdown transfer panel. When control is selected to the remote shutdown panel, Charging Flow Controller u-FK-0121A at the remote shutdown panel will control valve

position. There is no setpoint input to this controller from the pressurizer level control system. The remote shutdown panel flow controller develops an output based on the error between actual flow and the established flow setpoint. Charging Flow Controller u-FK-0121A is tuned to respond very slowly to setpoint changes. For example, if the auto setpoint potentiometer position for this controller is changed by 10%, the controller output will only change by 2 to 3% initially. Approximately 2 to 4 minutes will elapse before the full effect of the setpoint change will be seen.

On a Safety Injection signal, the centrifugal charging pumps are aligned to the reactor coolant system through the high pressure safety injection piping directly off the discharge of the centrifugal charging pumps, upstream of CCP u-01/u-02 Charging Flow Control Valve u-FCV-0121. In this situation, charging pump flow rate is determined by the pump characteristics, piping head losses and reactor coolant system pressure. Manual valves in the flow path from the charging pumps to the reactor coolant system loop safety injection penetrations are pre-positioned to protect the centrifugal charging pumps against runout conditions in the event of a large break loss of coolant accident.

Examination Outline Cross-Reference	Level	RO	SRO
Rev. Date: 1/6/2015	Tier #	1	n/a
Change: 2	Group #	1	n/a
	K/A #	W/E11 EA1.1	n/a
Level of Difficulty: 3	Importance Rating	3.9	n/a

Loss of Emergency Coolant Recirculation: Ability to operate and / or monitor the following as they apply to the (Loss of Emergency Coolant Recirculation): Components, and functions of control and safety systems, including instrumentation, signals, interlocks, failure modes, and automatic and manual features.

Question 54

Unit 1 initial plant conditions:

- Reactor power = 100%
- A Large Break LOCA occurs

Current plant conditions:

- Both CCW pumps trip
- Crew transitions to ECA 1.1A, LOSS OF EMERGENCY COOLANT RECIRCULATION
- Containment pressure = 20 psig
- RWST level = 16%

Based on current plant conditions, complete the following statements:

1. Upon entry into ECA 1.1A, there are ____(1)____ Containment Spray Pumps spraying into containment.

2. ECA1.1A directs ____(2)____Containment Spray Pumps.

A. (1) four
(2) stopping 2

B. (1) four
(2) stopping 4

C. (1) 0
(2) starting 2

D. (1) 0
(2) starting 4

Answer: A
This question matches the KA by requiring knowledge of the Containment Spray System works during a LOCA and how the operator uses manual controls to modify the system lineup during a loss of recirculation (loss of CCW to the HX).

Explanation / Plausibility:

A. 1st part is correct. At > 18.2 psig, the Containment Spray pump will start injecting into the containment atmosphere. 2nd part is correct. Per ECA-1.1A, step 10, with water in the RWST and containment pressure between 18 and 50 psig, there should be 2 Containment Spray pumps operating.

B. 1st part is correct. 2nd part is incorrect because the operator should only secure 2 CS pumps. It is plausible because if containment pressure were < 18 psig, it would be correct.

C. 1st part is incorrect because 4 CS pumps would be injecting. It is plausible because if containment pressure was < 18.2 psig, it would be correct. 2nd part is correct.

D. 1st part is incorrect but plausible (see C). 2nd part is incorrect but plausible (see B).

Technical Reference: (Attach if not previously provided including revision number)	Containment Spray Study Guide ECA-1.1A Loss of Emergency Coolant Recirculation

Proposed references to be provided to applicants during examination: _____

Learning Objective: EXPLAIN the normal, abnormal and emergency operation of the Containment Spray system. (LO21.SYS.CT1.OB05)

Question Source:	Bank #	
	Modified Bank#	
	New	X
Question History:	Last NRC Exam	
Question Cognitive Level	Memory or Fundamental Knowledge	
	Comprehension or Analysis	X
10 CFR Part 55 Content:	55.41	41.7
	55.43	n/a

STEP	ACTION/EXPECTED RESPONSE	RESPONSE NOT OBTAINED

NOTE: Verification of at least one flowpath from a RHR pump to the RCS via a SI pump or CCP is sufficient to verify cold leg recirculation capability.

[R]	11	Initiate Evaluation Of Plant Status:	
		a. Verify cold leg recirculation capability:	
		1) Verify the following conditions for the train related RHR pump(s): **TRAIN A** • RHR pump A - AVAILABLE • CCW to RHR pump A - AVAILABLE • 1/1-8811A, CNTMT SMP TO RHRP 1 SUCT ISOL VLV - AVAILABLE **TRAIN B** • RHR pump B - AVAILABLE • CCW to RHR pump B - AVAILABLE • 1/1-8811B, CNTMT SMP TO RHRP 2 SUCT ISOL VLV - AVAILABLE	1) **IF** at least one train of cold leg recirculation capability can **NOT** be verified, **THEN** go to ECA-1.1A, LOSS OF EMERGENCY COOLANT RECIRCULATION, Step 1.

-CONT 11-

STEP	ACTION/EXPECTED RESPONSE	RESPONSE NOT OBTAINED
10	Determine Containment Spray Requirements (Suction From RWST):	
	a. Containment spray pump suction - ALIGNED TO RWST	a. **IF** containment spray pump suction aligned to sump, **THEN** go to Step 12.
	b. Determine number of containment spray pumps required from Table 1.	

TABLE 1

RWST LEVEL	CONTAINMENT PRESSURE	SPRAY PUMPS REQUIRED
GREATER THAN RWST EMPTY	GREATER THAN 50 PSIG	4
	BETWEEN 18.0 PSIG AND 50 PSIG	2
	LESS THAN 18.0 PSIG	0
LESS THAN RWST EMPTY	-	0

	c. Containment spray pumps running - EQUAL TO NUMBER REQUIRED	c. Manually operate containment spray pumps as necessary.

CONTAINMENT SPRAY STUDY GUIDE

MAJOR FLOWPATH

STANDBY (FIGURE 2)

During operation in Modes 1-4, the Containment Spray System is aligned in standby readiness to actuate if required. Four pumps (2/train) are aligned to take suction from the RWST via two train related suction valves. The pumps are off with their handswitches maintained in the AUTO position. Heat exchanger outlet valves are in AUTO and closed. The chemical addition tank is isolated by maintaining the motor operated outlet valves closed with their handswitches in AUTO. Chemical addition tank air operated outlet valves are open with their handswitches also in AUTO. The four Containment Spray pump recirculation valves (1/pump) are open due to low pump flow with their hand switches in AUTO.

SAFETY INJECTION (FIGURE 3)

After safety injection actuation, Containment Spray pumps start and run in recirculation. The recirculation flow path starts at the RWST, through the RWST suction valves, each pump, and back to the RWST via the pump related recirculation valve. The recirculation line originates between the pump and heat exchanger thus recirculation flow is not cooled by the heat exchanger. A chemical eductor taps off after the pumps and flow is returned to the suction lines. Although containment spray flows through the eductor, chemical addition tank motor operated outlet valves are closed resulting in no flow from the chemical addition tank.

INJECTION (FIGURE 4)

Once HI-3 containment pressure is reached (≥ 18.2 psig), indicating a need for Containment Spray flow, a P signal is generated and the Containment Spray System is automatically transferred to the injection mode of operation. Water is drawn from the RWST and through the pump. The heat exchanger outlet valve begins to open resulting in water spray into containment. As the heat exchanger outlet valves come off of their closed seats a close signal is sent to the recirculation valves. Flow is then routed through the heat exchanger, (no cooling required) into containment, up the risers, and out the spray nozzles. The chemical additive tank motor operated outlet valves open and the eductor begins pulling the concentrated chemicals from the tank and injecting them into the suction of its associated pump. Once a low level is reached in the chemical addition tank, the chemical addition tank motor operated outlet valves close or, if this fails to happen, a lo-lo level (≤ 5.82%) will close the air operated outlet valves, terminating the chemical injection.

RECIRCULATION (FIGURE 5)

The Containment Spray System continues to draw water out of the RWST until level reaches a point (≤ 6%) where the operator is directed by procedure to manually swap the pump suctions over to the Containment sumps by opening the Containment sump suction valves and closing the RWST suction valves. Water is then drawn from the containment sumps through the pumps, discharged through the heat exchangers (cooling required) into Containment, up the risers, and out the spray nozzles.

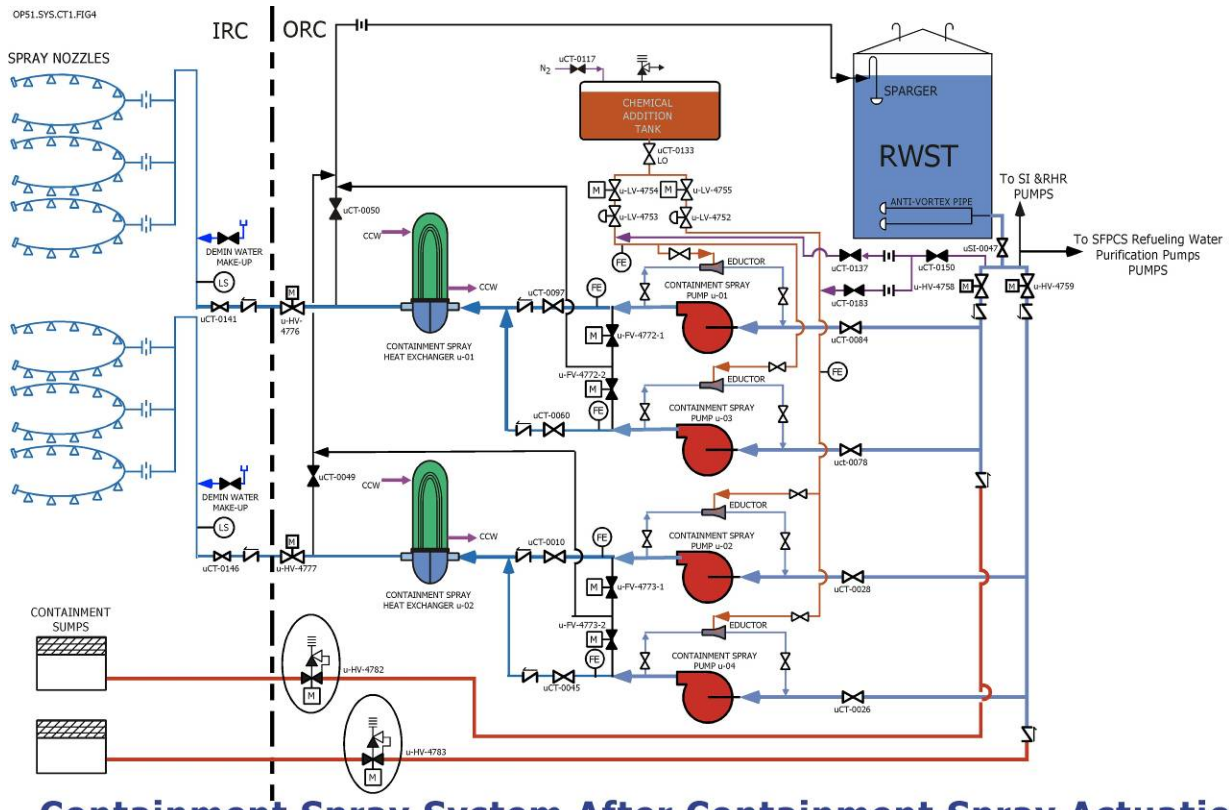

Containment Spray System After Containment Spray Actuation

Figure 4

Examination Outline Cross-Reference	Level	RO	SRO
Rev. Date: 1/6/2015	Tier #	1	n/a
Change: 2	Group #	1	n/a
	K/A #	BW/E04 W/E05 EK1.3	n/a
Level of Difficulty: 4	Importance Rating	3.9	n/a

Inadequate Heat Transfer-Loss of Secondary Heat Sink: Knowledge of the operational implications of the following concepts as they apply to the (Loss of Secondary Heat Sink): Annunciators and conditions indicating signals, and remedial actions associated with the (Loss of Secondary Heat Sink).

Question 55

Unit 1 plant conditions:

- Reactor power = 100%
- A loss of all feedwater occurs
- FRH-0.1A, RESPONSE TO LOSS OF SECONDARY HEAT SINK has been initiated
- FRH-0.1A is directing alignment of the Condensate system to feed SGs.

Which ONE of the following is correct when referring to reducing SG pressure?

A. All 4 SG pressures should be reduced at a rate only limited by exceeding a 100°F per hour cooldown rate.

B. All 4 SG pressures should be reduced at a rate limited only by that necessary to avoid initiation of bleed and feed.

C. Only 1 to 2 SG pressures should be reduced at a rate only limited by exceeding a 100°F per hour cooldown rate.

D. Only 1 to 2 SG pressures should be reduced at a rate limited only by that necessary to avoid initiation of bleed and feed.

Answer: D

This question matches the KA by requiring knowledge of the operational implications of using condensate to feed SGs.

Explanation / Plausibility:

A. This is incorrect because only 1 or 2 SGs are depressurized. This reduces the possibility that the resulting shrinkage results in meeting the criteria for Bleed & Feed and manual SI initiation. It is plausible because the actual step states to dump steam from at least one SG. This implies “more is better”. The rate portion is incorrect. While this may be a concern, the rate is limited so as not to require bleed and feed or manual SI initiation.

B. This is incorrect but plausible (see A) but the reason for the rate is correct.

C. This is incorrect because the rate is limited so as not to require bleed and feed or manual SI initiation. It is plausible because the 100 ^{O}F / hr cooldown rate is adhered to in other events covered by the EOP (SGTR).

D. This is correct.

Technical Reference: (Attach if not previously provided including revision number)	FRH-0.1A RESPONSE TO LOSS OF SECONDARY HEAT SINK

Proposed references to be provided to applicants during examination: _____

Learning Objective:	Given a procedural Step, NOTE, or CAUTION, DISCUSS the reason or basis for the Step, NOTE, or CAUTION in FRH-0.1. (LO21.ERG.FH1.OB04)

Question Source:	Bank #	
	Modified Bank#	
	New	X
Question History:	Last NRC Exam	
Question Cognitive Level	Memory or Fundamental Knowledge	X
	Comprehension or Analysis	
10 CFR Part 55 Content:	55.41	41.8
	55.43	n/a

STEP	ACTION/EXPECTED RESPONSE	RESPONSE NOT OBTAINED

CAUTION: Following block of automatic SI actuation, manual SI actuation may be required if conditions degrade.

NOTE: After the low steamline pressure SI signal is blocked, main steam isolation will occur if the high steam pressure rate setpoint is exceeded.

9	Establish Feed Flow From Condensate System:	
	a. Depressurize RCS to less than 1910 psig:	
	1) Turn off all PRZR heaters.	
	2) Check letdown - IN SERVICE	2) Use one PRZR PORV. **IF NOT**, **THEN** use auxiliary spray. Go to Step 9b.
	3) Use auxiliary spray.	3) Use one PRZR PORV.
	b. Block SI signals:	
	• Low steamline pressure SI	
	• Low PRZR pressure SI	
	c. Depressurize at least one SG to less than 500 psig:	
	1) Dump steam to condenser at maximum rate and avoid main steam isolation.	1) Manually or locally dump steam from SGs using intact SG atmospheric(s). **IF NOT**, **THEN** go to Step 11.

STEP	ACTION/EXPECTED RESPONSE	RESPONSE NOT OBTAINED
	d. Establish condensate feed flow: 1) Perform the following: A) Locally restore power to feedwater valves (TB 803 SW Corner): • 1B3-1/1C/BKR, CONDENSATE TO FW PUMP 1-B SUCTION VALVE 2323 MOTOR BREAKER • 1B3-1/5F/BKR, SG FEEDWATER PUMP 1-B FLUSH BY-PASS VALVE 1-HV-2124 MOTOR BREAKER • 1B3-1/6C/BKR, SG FEEDWATER PUMP 1-A FLUSH BYPASS VALVE 1-HV-2122 MOTOR BREAKER • 1B3-1/6F/BKR, CONDENSATE TO FW PUMP 1-A SUCTION VALVE 2321 MOTOR BREAKER B) Ensure both Main FW pumps - TRIPPED C) Locally close CNDS TO FWP 1-A <u>AND</u> 1-B SUCT VLV (TB 803 by Condensate Polishing Panel): • 1-HV-2321 • 1-HV-2323	d. Go to Step 11. 1) Locally open U1 FW PMP BYP VLV: • 1FW-0121 (TB 803 between FW Heaters 1B & 2B)

STEP	ACTION/EXPECTED RESPONSE	RESPONSE NOT OBTAINED
	D) Locally open FW PMP 1-A <u>OR</u> 1-B FLSH BYP VLV (TB 803 by Condensate Polishing Panel): • 1-HV-2122 • 1-HV-2124	
	2) Ensure the following valves - CLOSED: A) Feed Water Pump Recirc valves: • 1-ZL-2289 • 1-ZL-2290 B) Condensate Reject: • 1-HS-2211/12	
	3) Manually open FW isolation bypass valve(s).	3) Dispatch operators to available SGs FW valve area (SFGD 854 Feed Penetration Rooms) and establish communications. A) Locally open FW Isolation Bypass Valve(s) • SG #1, 1-HV-2185 • SG #2, 1-HV-2186 • SG #3, 1-HV-2187 • SG #4, 1-HV-2188 B) <u>IF</u> no FW valve(s) can be opened, <u>THEN</u> go to Step 11.

-CONT 9-

STEP	ACTION/EXPECTED RESPONSE	RESPONSE NOT OBTAINED
	4) Manually throttle open FW control bypass valve(s) to establish flow.	4) Manually open FW control valve(s) to establish flow. <u>IF</u> no valve can be opened, <u>THEN</u> perform the following: A) Dispatch operator to available SGs FW control valve area and establish communications. B) Locally open FW control valve(s) as directed by Control Room to maintain SG Levels: • SG #1, 1-FCV-510 • SG #2, 1-FCV-520 • SG #3, 1-FCV-530 • SG #4, 1-FCV-540 C) <u>IF</u> a FW control valve can <u>NOT</u> be opened, <u>THEN</u> locally open FW control bypass valve(s): • SG #1, 1-LV-2162 • SG #2, 1-LV-2163 • SG #3, 1-LV-2164 • SG #4, 1-LV-2165 D) <u>IF</u> no FW valve(s) can be opened, <u>THEN</u> go to Step 11.
	5) Ensure Condensate Pump Recirc Valve - THROTTLED CLOSED as necessary • 1-ZL-2239	

ATTACHMENT 4
PAGE 7 OF 26

BASES

When determining how many SG(s) to depressurize for the action of establishing condensate flow, the approach to establish a heat sink must consider the impact to the RCS caused by the depressurization of the SG(s). Depressurizing all SGs restores heat sink in all loops, but causes a large RCS shrink and may cause a reduction in SG level such that Wide Range levels reach the value which require initiation of bleed and feed. PRZR shrinkage caused by depressurizing all SGs can also appear to be a loss of inventory, which may be diagnosed as a need to manually initiate SI when it is not needed, and cause delay in restoring feed flow. When only one or two SG(s) are steamed, the likelihood of reaching the criteria for initiation of RCS bleed and feed is reduced because RCS cooldown and shrinkage is limited. The accompanying reduction in PRZR level and RCS subcooling is less severe, which in turn reduces the likelihood that manual SI actuation will be required based on degraded plant conditions. Performing the actions to establish condensate feed flow to two SGs provides some margin to ensure that a heat sink can be established while avoiding bleed and feed criteria. Before depressurizing individual SGs, the SGs not to be depressurized should be isolated from the other SGs.

Depressurization of the SG(s) is accomplished through the condenser

Examination Outline Cross-Reference	Level	RO	SRO
Rev. Date: 1/6/2015	Tier #	1	n/a
Change: 3	Group #	1	n/a
	K/A #	077 AA2.06	n/a
Level of Difficulty: 3	Importance Rating	3.4	n/a

Generator Voltage and Electric Grid Disturbances: Ability to determine and interpret the following as they apply to Generator Voltage and Electric Grid Disturbances: Generator frequency limitations.

Question 56

Unit 1 plant conditions:

- Reactor power = 75%
- A Grid Disturbance is occurring
- A computer alarm is received for Main Generator Volts/Hz
- ABN-601, RESPONSE TO A 138/345 KV SYSTEM MALFUNCTION has been initiated

Based on the above plant conditions, complete the following statement:

If grid frequency ____(1)____, ABN-601 directs starting the DGs and divorcing the safeguards busses from the grid.

A. > 60.6 Hz for greater than 9 minutes

B. > 60.4 Hz for greater than 2 minutes

C. < 59.4 Hz for greater than 2 minutes

D. < 59.6 Hz for greater than 9 minutes

Answer: C

This question matches the KA by requiring knowledge of frequency limitations (trip criteria) during a grid disturbance.

Explanation / Plausibility:

A. Incorrect because transferring load to the DGs is performed for frequency too low. It is plausible because there are actions for this condition (Rx Trip).

B. Incorrect because transferring load to the DGs is performed for frequency too low. It is plausible because it is an abnormal frequency and if it were too low, 2 minutes is correct.

C. Correct per ABN-601.

D. Incorrect because at this frequency, continuous operation is allowed. It is plausible because the frequency is abnormal and the time is related to actions required in ABN-601.

Technical Reference: (Attach if not previously provided including revision number)	Main Generator Study Guide ABN-601 Response to a 138/345 KV system malfunction

Proposed references to be provided to applicants during examination: _____

Learning Objective: **EXPLAIN** the normal, abnormal and emergency operation of Main Generator. (LO21.SYS.MG1.OB26)

Question Source:	Bank #	
	Modified Bank#	
	New	X
Question History:	Last NRC Exam	
Question Cognitive Level	Memory or Fundamental Knowledge	
	Comprehension or Analysis	X
10 CFR Part 55 Content:	55.41	41.5
	55.43	n/a

Main Generator Study Guide

The following is an overview of how the various voltage regulator protection components work in the new turbine digital control system:

- FIELD FORCING LIMITER - The output current of the voltage regulator is limited by the field forcing limiter to the value corresponding to the ceiling voltage of the main exciter. When the current required for build-up of the ceiling voltage is exceeded, the voltage relay initiates a change over from automatic to manual control after a short time delay.
- OVER-EXCITATION LIMITER - The over excitation limiter limits the generator excitation by automatically reducing the generator voltage. The over excitation limiter has a response time universally proportional to the difference between the actual value and the setpoint value. The shortest response time should be coordinated with the time setting of the back up protection of the generator. The follow-up control of the manual mode of operation is blocked the moment over excitation is sensed.
- UNDER-EXCITATION LIMITER - The under-excitation limiter automatically prevents too low excitation of the generator. A reduction of the excitation may, for instance, occur under influence of the automatic voltage regulator when the system voltage rises during low-load operation. A reduction of the excitation may also result from a faulty operation.
- VOLTS PER HERTZ LIMITER - The Volts per Hertz (V/Hz) limiter measures the voltage and frequency and compares the relation of both. The V/Hz limiter generates an alarm at a selected setpoint. If the generator main breaker is open, the output signal of the V/Hz limiter takes control of the regulator regardless of regulator mode (manual or automatic). An additional alarm is given indicating that the V/Hz limiter is in action. In case the turbine-generator is synchronized to the system, no V/Hz limitation will occur, but only an alarm will be sent to the Alarm Display.
- PT BREAKER - A PT monitoring function is provided for detection of loss of PT's or loss of PT fuse. Upon failure, the TVR transfers from active to standby control. A transfer to manual occurs if the redundant controller is not available. Closely monitor generator parameters due to a loss of underexcitation, overexcitation and volts/hz limiters.
- CONDUCTION MONITORING - A monitoring circuit is provided for detection of thyristor failure in the converter.
- SELF-DIAGNOSTICS AND WATCHDOG - A diagnostics circuit continuously monitors the electronic components of the TVR. The diagnostics circuit does not interfere with the normal system functions. Upon power-up of the voltage regulator, the diagnostics verify that the hardware and software is fully operational. A built-in watchdog monitors the execution of the software.

9.3 Operator Actions

ACTION/EXPECTED RESPONSE	RESPONSE NOT OBTAINED

NOTE:
- Generator load will decrease with decreasing frequency (due to reduction in generator efficiency) and automatic load control will restore the load to the set load. This will result in increasing steam flow and increased reactor power. Maintain reactor power less than 100%.
- Steps 1 through 3 should be considered continuous action steps during periods of grid instability.

☐ 1 Maintain Reactor Power - LESS THAN OR EQUAL TO 100%.

☐ 2 Verify QSE Generation Controller communications - AVAILABLE — Control frequency as necessary per Attachment 23

CAUTION: When CPNPP trips both Reactors, it is highly probable that the grid will be lost and a loss of all offsite power will occur.

☐ 3 Perform the following as appropriate.

FREQUENCY	ACTION
>60.6 Hz (1818 rpm)	• Maintain contact with QSE • Stabilize plant power for load reduction • If immediate recovery is not evident after 9 minutes, coordinate with QSE to trip the reactor, if necessary and GO TO EOP 0.0A/B.
≤57.5 Hz (1725 rpm)	**IMMEDIATELY** Trip reactor and GO TO EOP.0.0A/B
≤58.0 Hz (1740 rpm)	**AFTER 2 sec** Trip reactor and GO TO EOP.0.0A/B
≤58.4 Hz (1752 rpm)	**AFTER 30 sec** Trip reactor and GO TO EOP.0.0A/B
≤59.4 Hz (1782 rpm)	**GO TO STEP 4**
>59.4 Hz (1782 rpm)	Continuous operation allowed.

9.3 Operator Actions

ACTION/EXPECTED RESPONSE	RESPONSE NOT OBTAINED

NOTE: IF frequency recovers to >59.4 Hz, stop the timer and reset. Start a new 9 minute timer if frequency drops below 59.4 Hz.

☐ 4 Perform the following steps for both units.

A. Start 9 minute timer AND call QSE.

B. Stabilize plant power level.

C. IF Grid Frequency is still <59.4 Hz after 2 minutes, THEN perform the following steps to divorce the safeguards busses from the grid:

1) Turn on the synchroscope for the Train A diesel output breaker AND parallel the diesel with off-site power.

2) Close the diesel output breaker AND turn off the synchroscope.

3) Raise load until the off-site breaker supplying the bus reads zero current.

4) Place the alternate power supply breaker for the safeguards buses to PULL-OUT.

5) Place the normal power supply breaker for the safeguards buses to PULL-OUT.

6) Repeat steps 1) through 5) for the Train B diesel.

"Step continued next page"

Examination Outline Cross-Reference	Level	RO	SRO
Rev. Date: 1/18/2015	Tier #	1	n/a
Change: 3	Group #	2	n/a
	K/A #	003 AK2.05	n/a
Level of Difficulty: 2	Importance Rating	2.5	n/a

Dropped Control Rod: Knowledge of the interrelations between the Dropped Control Rod and the following: Control rod drive power supplies and logic circuits.

Question 57

Unit 1 plant conditions:

- Reactor power = 80%
- Control rods are moving out in response to low Tave
- ANY ROD AT BOT alarms
- DRPI ROD DEV alarms
- 1 bank CBD rod bottom light is lit
- CONTROL ROD CTRL URGENT FAIL alarms
- ABN-712, ROD CONTROL SYSTEM MALFUNCTION is entered
- Control rods are placed in MANUAL

Based on the above plant conditions, complete the following statements:

1. The malfunction/failure would impose a rod ____(1)____in the rod control system.

2. With the control rods in MANUAL, control rods ____(2)____.

A. (1) stop
(2) CANNOT be moved in either direction

B. (1) stop
(2) can be inserted but not withdrawn

C. (1) inhibit
(2) CANNOT be moved in either direction

D. (1) inhibit
(2) can be inserted but not withdrawn

Answer: C

This question matches the KA by requiring knowledge of how a failure in the logic/power circuits of the control rod drive circuitry affects the ability to move control rods.

Explanation / Plausibility:

A. 1st part is incorrect because it would generate an “inhibit” function. It is plausible because a Rod Stop signal is also generated from conditions in which rod motion would be bad. 2nd part is correct. An inhibit signal prevents rod motion in either direction with the selector switch in MANUAL.

B. 1st part is incorrect but plausible (see A). 2nd part is incorrect because with an inhibit signal, rod motion is prevented in either direction when in MANUAL. It is plausible because for a Rod Stop, inward control motion is still allowed.

C. 1st part is correct. 2nd part is correct.

D. 1st part is correct. 2nd part is incorrect but plausible (see C).

Technical Reference: (Attach if not previously provided including revision number)	Rod Control Study Guide

Proposed references to be provided to applicants during examination: _____

Learning Objective: EXPLAIN the normal, abnormal and emergency operation of the Rod Control System. (LO21.SYS.CR1.OB05)

Question Source:	Bank #	
	Modified Bank#	
	New	X
Question History:	Last NRC Exam	
Question Cognitive Level	Memory or Fundamental Knowledge	X
	Comprehension or Analysis	
10 CFR Part 55 Content:	55.41	41.7
	55.43	n/a

Dropped or Misaligned Rod in Mode 1 or 2

A control rod is considered to be misaligned when two DRPI's in the same group disagree by greater than or equal to 12 steps or one DRPI disagrees with its group step counter by greater than or equal to 12 steps. Possible annunciator alarms that would indicate a misaligned rod(s) condition are PR Chan Dev, DRPI Rod Dev and/or a Quadrant PWR Tilt. The procedure for a misaligned rod recovery is ABN-712.

The recovery procedure initially places the reactor in a safe condition by verifying various plant parameters and taking actions accordingly to bring these back into operating bands. These include T_{avg}-T_{ref}, Reactor Power and the Axial Flux Difference. The Axial Flux Difference is defined as the difference in the normalized flux signals between the top and the bottom halves of a four section excore neutron detector. Basically it is the relationship of how the neutron flux is distributed across the core from top to bottom. The Quadrant Power Tilt Ratio (QPTR) is then verified to be within specifications by verifying the alarm clear. The Quadrant Power Tilt is defined as the ratio of the maximum upper half excore detector calibrated output, to the average of the upper half excore detector calibrated outputs, or the ratio of the maximum lower half excore detector calibrated output to the average of the lower half excore calibrated outputs, **whichever is greater.** If the alarm is in, the QPTR is calculated in accordance with OPT-302 or by the plant computer.

The cause of the misaligned or dropped control rod is investigated and must be determined within an hour or else implement the requirements of Tech. Spec. 3.1.3.1.

To retrieve a dropped rod, the operator places the bank selector switch to the affected group and records the position of that group (and P/A converter value). At the back of the control board, the lift coil disconnect switches are placed in the open position for all rods in the affected bank with exception of the affected rod. The operator then recovers the dropped rod using either the DRPI recovery method or the referencing method.

If using the referencing method, the operator resets the step counter to 0 and if the affected rod is a control bank rod, then the P/A converter is set to zero steps. Then the rod is withdrawn to 232 steps over a period of 15 to 30 minutes. Only the affected rod moves since the lift coils disconnect switches for the other rods are open and prevent movement. The affected step counter is then set to 231 steps and the rod driven in to the previously recorded position. If the rod is in a control bank, then the P/A converter is reset to the previously recorded value. After the rod has been returned to the proper position, the lift coil disconnect switches opened previously are closed and the alarms are cleared and the bank selector is returned to the desired position.

The DRPI method moves the unaffected rods to turn on the next DRPI light and then aligns the affected rod to the same light, while traveling in the same direction. Response to this condition is in accordance with ABN-712.

ABNORMAL

URGENT FAILURE - POWER CABINET

A power cabinet Urgent Failure can be caused by regulation or phase failure, logic or multiplex error or a loose printed circuit card.

A regulation failure occurs when coil current does not match the current order within a preset time or a full current order is on too long. This protects against dropping rods or overheating the coils.

A phase failure occurs when voltage to coils has excess ripple. This would mean that one of the three phases of AC was being processed differently than the others, perhaps due to a blown fuse, a thyristor that has lost gate control, etc.

A logic error is a simultaneous zero current order to stationary and movable grippers. Hopefully, this will be detected as soon as the zero orders are transmitted, and the automatic corrective action completed before controlling thyristors could cut the current to zero. This protects against dropping rods.

A multiplexer error occurs when any rod or group of rods not selected by the multiplex function is getting current in the movable or lift coils. This protects against a failed (conducting) multiplex thyristor, which might result in overloading the power cabinet circuits and later dropping rods with mechanism mechanical damage and changes in reactivity addition rate.

The system will automatically respond by having failure detection logic overriding all current orders from the logic cabinet to the affected power cabinet and ordering low current on the selected groups movable and stationary grippers and zero current on the lift coil in the affected cabinet to try to prevent dropping rods due to the failure. It will send "inhibit" signals to the pulser/oscillator to stop the selected groups rod motion, in or out, in Auto or Manual, (unless in cabinet SCDE where only shutdown banks C, D, and E are affected) but still permit rod movement by selecting individual banks on the bank selector switch.

None of the groups in the alarmed power cabinet will move because as soon as it is selected it's movable and stationary grippers are overridden into LOW selecting a different group in that cabinet only changes which group's movable grippers get the LOW current order. The non selected groups stationary grippers always get a low current order. The inhibit function is different from a rod stop. Rod stop is external and due to plant conditions and does not stop in-motion. An inhibit is due to an internal failure of the rod control system and stops both in and out motion, until individual bank is selected

A Rod Control System Urgent Failure annunciator will actuate on the MCB. A light on the affected power cabinet and circuit card will light to identify the faulty component.

These functions seal in and must be reset either at the cabinet or the main control board once the condition has been cleared. The Monitoring Test Panel allows the switching of a group of rods onto the DC Hold cabinet when required for maintenance.

To determine the affected cabinet, a white light on the affected cabinet will be lit. White lights on the affected circuit card will be lit to aid in determining the cause of the failure. These lights will light when the cabinet door is opened. A diagram on the inside door of each cabinet lists the card frame numbers and available light designators.

Response to this alarm is in accordance with ALM-0064A/B for u-ALB-6D.

Examination Outline Cross-Reference	Level	RO	SRO
Rev. Date:1/7/2015	Tier #	1	n/a
Change: 3	Group #	2	n/a
	K/A #	024 AK3.02	n/a
Level of Difficulty: 3	Importance Rating	4.2	n/a

Emergency Boration: Knowledge of the reasons for the following responses as they apply to Emergency Boration: Actions contained in EOP for emergency boration.

Question 58

Unit 1 plant conditions:

- Reactor power = 80%
- The main turbine trips
- The reactor fails to automatically or manually trip from the control room
- FRS-0.1A, RESPONSE TO NUCLEAR POWER GENERATION / ATWT has been initiated
- CCP-1-01 is operating

Based on the above plant conditions, which ONE of the following is correct regarding the initiation of emergency boration per FRS-0.1A?

A. If charging flow is < 30 gpm, the PD pump will be started to ensure the minimum amount of charging flow is established.

B. Charging pump suction will be shifted to RWST if at least 30 gpm emergency boration flow cannot be established to ensure the maximum rate of boron addition to the RCS.

C. If charging flow is > 30 gpm, only one CCP will be used for emergency boration due to delivering adequate flow.

D. Charging pump suction will be shifted to RWST, then the CCP High Head injection valves will always be opened to ensure the maximum rate of boron addition to the RCS.

Answer: C

This question matches the KA by requiring knowledge of the reasons for steps contained in the EOP for emergency boration.

Explanation / Plausibility:

A. Incorrect because the CCP operations are established before checking for flow rate. It is plausible because the first step is to ensure that at least one CCP is running. The RNO is to start the PD pump.

B. Incorrect because there is no minimum emergency boration flow. The procedure just states that flow is established. It is plausible because if it referred to charging flow, it would be correct.

C. Correct.

D. Incorrect because the High Head Injection valve will only be opened if flow through the normal charging flow path cannot be established.

Technical Reference: (Attach if not previously provided including revision number)	FRS-0.1A RESPONSE TO NUCLEAR POWR GENERATION/ATWT

Proposed references to be provided to applicants during examination: _____

Learning Objective:	Given a procedural Step, NOTE, or CAUTION, DISCUSS the reason or basis for the Step, NOTE, or CAUTION in FRS-0.1A/B, "RESPONSE TO NUCLEAR GENERATION/ATWT" (LO21. ERG.FS1.OB04)

Question Source:	Bank #	
	Modified Bank#	
	New	X
Question History:	Last NRC Exam	
Question Cognitive Level	Memory or Fundamental Knowledge	
	Comprehension or Analysis	X
10 CFR Part 55 Content:	55.41	41.5, 41.10
	55.43	n/a

STEP	ACTION/EXPECTED RESPONSE	RESPONSE NOT OBTAINED
[1F] 4	Initiate Emergency Boration Of RCS:	
	a. Ensure at least one CCP running.	a. Start PD charging pump.
	b. Verify Charging flow - GREATER THAN 30 GPM	b. Perform one of the following to establish charging flow: • IF CCP running, THEN adjust charging flow control valve to establish charging flow - GREATER THAN 30 GPM • IF PD charging pump running, THEN adjust PD charging pump speed to establish charging flow - GREATER THAN 30 GPM • IF Charging flow path can NOT be established, THEN shift charging pump suction to the RWST by performing the following: 1) Open valves 1/1-LCV-112D and 1/1-LCV-112E. 2) Close valves 1/1-LCV-112B and 1/1-LCV-112C. 3) Open the CCP High Head injection flow path. 4) Go to Step 5.
	c. Align boration flowpath by performing the following: 1) Start all available boric acid transfer pump(s). 2) Open emergency boration valve, 1/1-8104. 3) Verify emergency boration flow.	c. Shift charging pump suction to the RWST by performing the following: 1) Open valves 1/1-LCV-112D and 1/1-LCV-112E. 2) Close valves 1/1-LCV-112B and 1/1-LCV-112C. 3) Adjust charging flow control valve to establish maximum charging flow.

ATTACHMENT 3
PAGE 3 OF 15

BASES

STEP 4: After control rod trip and rod insertion functions, boration is the next most direct manner of adding negative reactivity to the core. The intended boration path here is the most direct one available, not requiring SI initiation. Ensuring that charging flow is > 30 gpm will ensure capability of delivering boron to the core. Starting all available boric acid pumps will ensure that the "Emergency Boration" flowpath is delivering the maximum available boron to the charging system. The intent is to deliver boron to the core at the maximum achievable rate using the normal charging flowpath.

If charging flow cannot be verified through the normal flowpath, direction is given in the RNO column to establish charging flow > 30 gpm.

If a normal charging flowpath cannot be established the operator manually shifts charging suction to the RWST and opens the high head injection valves. This will ensure maximum flow of 2400 ppm boron without initiating SI. The intent is to deliver boron to the core at the maximum achievable rate using this flowpath. SI initiation should be avoided in order to maintain Main Feedwater.

The symbol [1F] has been utilized to identify that Attachment 1.F exists, which allows the actions for initiating emergency boration to be delegated to a Reactor Operator by handing off the attachment. Since the action involves multiple specific actions to accomplish this evolution, having the RO perform the evolution using the attachment in a step-wise manner may benefit the overall ERG performance (e.g., minimize communications, permit SRO directing response and recovery activities to maintain higher level view of effort, provide termination criteria to RO in a written format).

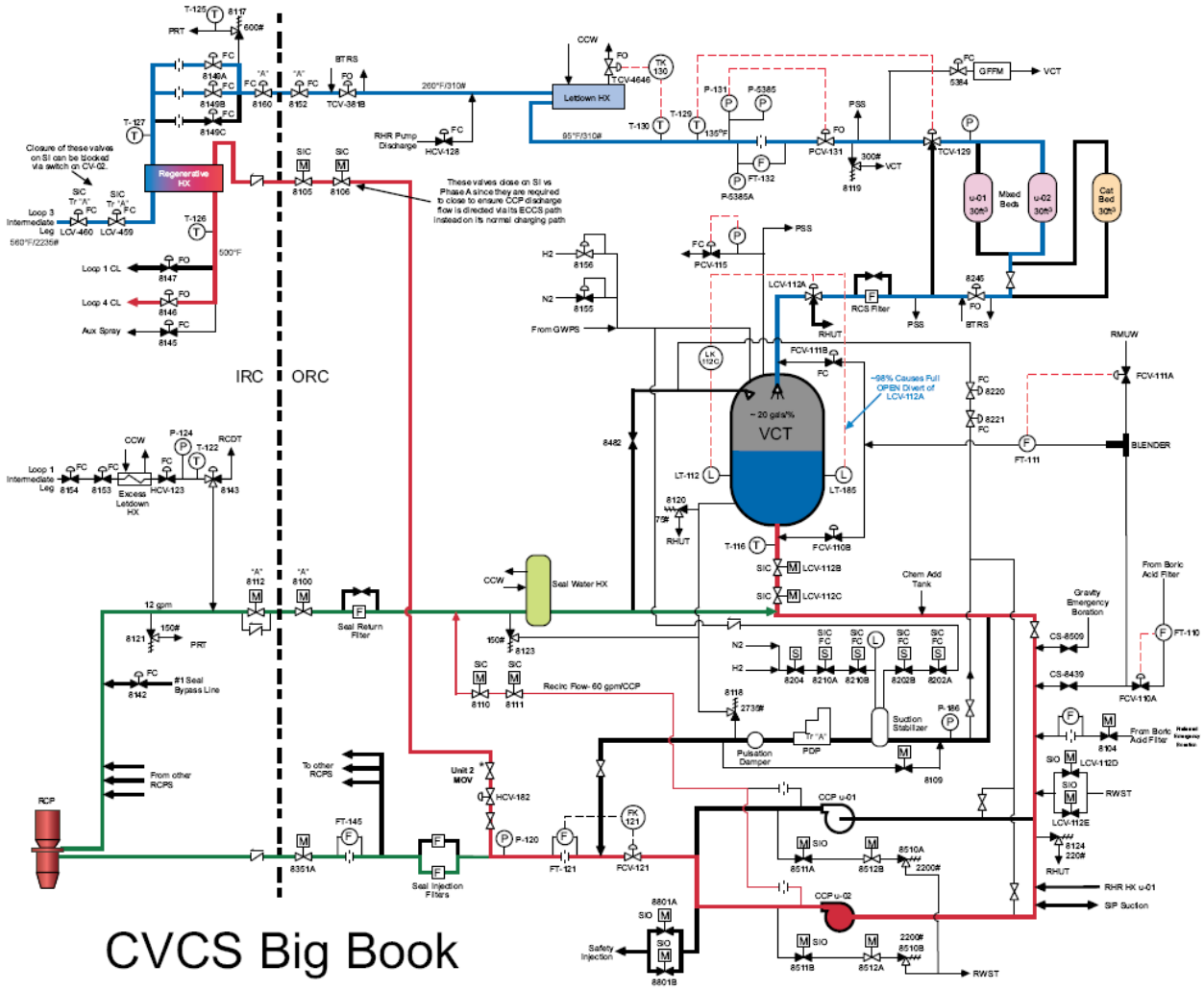

CVCS Big Book

Examination Outline Cross-Reference	Level	RO	SRO
Rev. Date: 1/7/2015	Tier #	1	n/a
Change: 3	Group #	2	n/a
	K/A #	028 AA2.03	n/a
Level of Difficulty: 2	Importance Rating	2.8	n/a

Pressurizer Level Malfunction: Ability to determine and interpret the following as they apply to the Pressurizer Level Control Malfunctions: Charging subsystem flow indicator and controller.

Question 59

Unit 2 plant conditions:

- Reactor power = 12%
- CCP-2-01 is operating
- Air to 2-FCV-121 CENTRIFUGAL CHARGING PUMP FLOW CONTROL VALVE is lost

Based on the above plant conditions, complete the following statement:

Charging flow indication in the Control Room will ____(1)____ which will require 2-HCV-0182 RCP SEAL WATER PRESSURE CONTROL VALVE to be ____(2)____ in order to maintain the correct amount of seal water flow to the RCPs.

A. (1) increase
   (2) throttled open

B. (1) increase
   (2) throttled closed

C. (1) decrease to 55 gpm
   (2) throttled open

D. (1) decreased to 55 gpm
   (2) throttled closed

Answer: A

This question matches the KA by requiring knowledge of how the charging system flow control valve fails and compensatory actions for that failure.

Explanation / Plausibility:

A. 1st part is correct. 2nd part is correct.

B. 1st part is correct. 2nd part is incorrect because when 2-FCV-121 fails open, flow to the seals will be excessive. With the split injection header, 2-FCV-121 will have to be opened to reduce seal injection flow. It is plausible because if the RCP Seal Pressure Control valve were on the line to the RCP seals, it would be correct.

C. 1st part is incorrect because 2-FCV-121 will fail open on a loss of control power. It is plausible because when the controller has power and is in AUTO, it has a "limiter" which does not allow flow to decrease below 55 gpm. 2nd part is correct.

D. 1st part is incorrect but plausible (see C). 2nd part is incorrect but plausible (see B).

Technical Reference: (Attach if not previously provided including revision number) CVCS Study Guide

Proposed references to be provided to applicants during examination: _____

Learning Objective: DESCRIBE the components of the Chemical and Volume Control system including interrelations with other systems to include interlocks and control loops. (LO21.SYS.CS1.OB03)

Question Source:	Bank #	
	Modified Bank#	
	New	X
Question History:	Last NRC Exam	
Question Cognitive Level	Memory or Fundamental Knowledge	X
	Comprehension or Analysis	
10 CFR Part 55 Content:	55.41	
	55.43	n/a

CENTRIFUGAL CHARGING PUMP FLOW CONTROL

Charging Flow Element u-FE-0121 is located on the combined charging pump discharge header in the charging pump valve room. It provides the differential pressure which is related to charging flow to Charging Pump Discharge Flow Transmitter u-FT-0121 (located, for Unit 1, in the boric acid storage tank room and, for Unit 2, in the Unit 2 CVCS valve operating room on the 822 foot elevation of the auxiliary building. The flow transmitter functions to generate a current signal which is proportional to charging header flow (from 0 to 270 gpm) for indication and control of charging flow. Charging Flow Indicators u-FI-0121A and u-FI-0121B (0 to 270 gpm) are located on CB-06 and at the remote shutdown panel, respectively. Charging flow is provided as an input to the plant computer. The CHG FLO HI/LO alarm on CB-06 also receives its inputs from the charging flow transmitter and is set to actuate at ≥ 150 gpm and at ≤ 55gpm.

The discharge flow from the centrifugal charging pumps to the normal charging header and to the reactor coolant pump seal injection lines is controlled by regulating the position of CCP u-01/u-02 Charging Flow Control Valve, u-FCV-0121, located in the charging pump valve room. This valve is air operated, and fails open on loss of air or control power.

The current to pneumatic converter for the positioner for u-FCV-0121 receives its control signal from CCP Charging Flow Controller u-FK-0121, a M/A station on CB-06. In MANUAL, the controller output can be varied from 0 to 100%. In AUTO, the controller adjusts its output based on the error between the actual flow from u-FT-0121 and a setpoint from the pressurizer level control system. The controller, in AUTO, limits valve position to allow a minimum of 55 gpm through the valve.

The charging flow control station can be selected to the control room or to the remote shutdown panel by operation of the two position (CR, HSP) Charging Flow Control Transfer Switch 43/u-0121FT in the shutdown transfer panel. When control is selected to the remote shutdown panel, Charging Flow Controller u-FK-0121A at the remote shutdown panel will control valve position. There is no setpoint input to this controller from the pressurizer level control system. The remote shutdown panel flow controller develops an output based on the error between actual flow and the established flow setpoint. Charging Flow Controller u-FK-0121A is tuned to respond very slowly to setpoint changes. For example, if the auto setpoint potentiometer position for this controller is changed by 10%, the controller output will only change by 2 to 3% initially. Approximately 2 to 4 minutes will elapse before the full effect of the setpoint change will be seen.

On a Safety Injection signal, the centrifugal charging pumps are aligned to the reactor coolant system through the high pressure safety injection piping directly off the discharge of the centrifugal charging pumps, upstream of CCP u-01/u-02 Charging Flow Control Valve u-FCV-0121. In this situation, charging pump flow rate is determined by the pump characteristics, piping head losses and reactor coolant system pressure. Manual valves in the flow path from the charging pumps to the reactor coolant system loop safety injection penetrations are pre-positioned to protect the centrifugal charging pumps against runout conditions in the event of a large break loss of coolant accident.

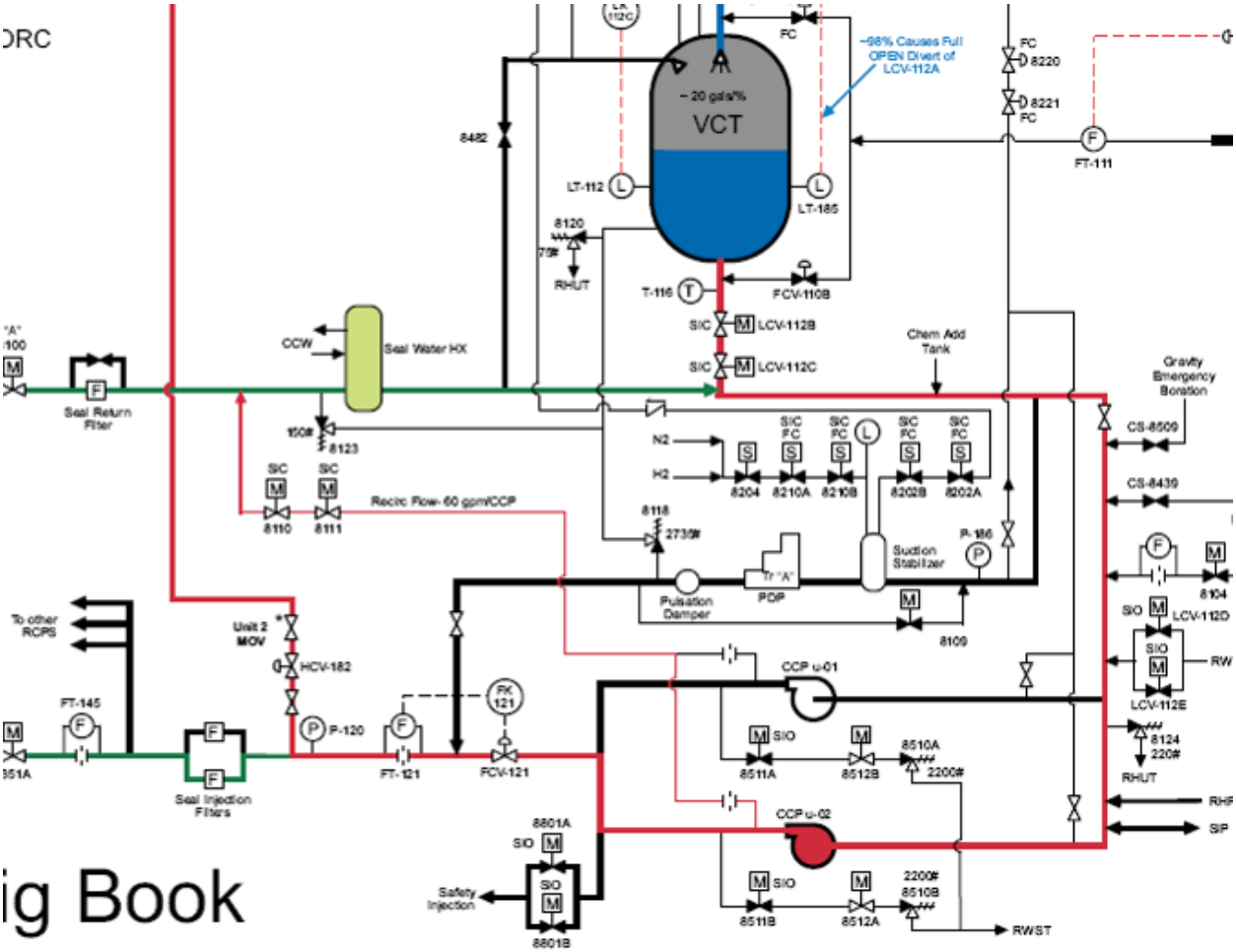
ORC
VCT
~ 20 gal/%
~98% Causes Full OPEN Divert of LCV-112A
FC
8220
8221
FT-111
8482
LT-112
LT-185
8120
RHUT
T-116
FCV-110B
SIC
LCV-112B
LCV-112C
Chem Add Tank
Gravity Emergency Boration
CS-8509
CS-8439
Seal Water HX
CCW
Seal Return Filter
8123
N2
H2
8204
8210A
8210B
8202B
8202A
Recirc Flow- 60 gpm/CCP
8110
8111
8118
2730#
Suction Stabilizer
P-186
Pulsation Damper
PDP
8109
8104
LCV-112D
LCV-112E
To other RCPS
Unit 2 MOV
HCV-182
FT-145
P-120
FT-121
FCV-121
Seal Injection Filters
CCP u-01
CCP u-02
8511A
8512B
8510A
2200#
8124
220#
RHUT
RHR
SIP
8801A
8801B
Safety Injection
8511B
8512A
8510B
RWST
ig Book

FLOW SPLIT TO THE SEAL INJECTION HEADER

During normal (non-emergency) operation of the charging system, the discharge flow of the running charging pump is directed to two main headers. One, the 2 inch seal injection header, supplies the seals of the reactor coolant pumps and the other, the 3 inch charging header, supplies the selected reactor coolant system cold leg. Maintaining a constant flow rate to the reactor coolant pump seals is desirable, yet charging pump flow rate is varied automatically, as described earlier, by adjusting the speed of the PDP or the flow rate out of the CCP as necessary to maintain pressurizer level. RCP Seal Water Pressure Control Valve u-HCV-0182 is located in the charging pump valve room, downstream of CCP u-01/u-02 Charging Flow Control Valve u-FCV-0121 and also downstream of the supply line to the RCP seals in the 3 inch charging header. It is positioned manually from the control room as necessary to adjust the back pressure on the valve, in order to maintain a constant seal injection flow rate. Repositioning this valve adjusts the relative distribution of charging header flow between the charging line and the seal injection header.

If, for example, while a CCP is in operation, CCP u-01/u-02 Charging Flow Control Valve, u-FCV-0121 is repositioned farther open, then the pressure on the seal injection supply line will increase and more flow will be directed to the reactor coolant pump seals. RCP Seal Water Pressure Control Valve u-HCV-0182 will have to be opened further, to reduce the seal injection supply pressure, in order to restore the seal injection flowrate to the normal desired value.

RCP Seal Water Pressure Control Valve Controller u-HC-0182 is a Hagan hand controller mounted on CB-06 which is adjusted to position u-HCV-0182. A power supply behind the control board accepts 120 VAC power from uPC1 at a plug-in receptacle inside CB-06. The power supply unit converts the 120 VAC to 45 VDC and supplies this Hagan hand controller, in addition to the hand controller for excess letdown flow control (u-HC-0123). Positioning the thumb wheel on the face of the controller varies the current output of the hand controller to the local I/P converter from 4 to 20 ma. The I/P converter, in turn, modulates the air pressure to the valve actuator to position the valve. The valve receives a full open signal when the hand controller is set to 100 percent and a full close signal when the controller is set to 0 percent. There are no automatic open or close signals to this valve and it will fail open on loss of air or control power.

RCP Seal Water Pressure Control Valve u-HCV-0182 is closed by air pressure acting against a spring in the valve actuator. The valve has a tendency to stick closed when operating at low reactor coolant system pressure because the normal full closing air pressure of 90 psig seats the valve too tightly. This problem is overcome by reducing the valve operating pressure to 20 psig during plant shutdown. Valve operating air pressure is restored to 90 psig during plant startup.

Manual isolations and a manual bypass are provided to allow maintenance on RCP Seal Water Pressure Control Valve u-HCV-0182, if necessary, while charging is in operation. Unit 2 has been modified to include a motor-operated isolation valve controlled from CB06.

Charging Header Pressure Transmitter u-PT-0120 provides input to an indicator on CB-06 and to a local pressure indicator. Both the remote and local indicators have a range of 0 to 3500 psig. Charging Header Pressure Transmitter u-PT-0120 also provides input to the plant computer. The Unit 1 transmitter and local indicator are located in the boric acid storage tank room. The Unit 2 transmitter and local indicator are located in the Unit 2 CVCS valve operating room on the 822 foot elevation of the auxiliary building.

Examination Outline Cross-Reference	Level	RO	SRO
Rev. Date: 1/7/2015	Tier #	1	n/a
Change: 2	Group #	2	n/a
	K/A #	032 AA1.01	n/a
Level of Difficulty: 2	Importance Rating	3.1	n/a

Loss of Source Range: Ability to operate and / or monitor the following as they apply to the Loss of Source Range Nuclear Instrumentation: Manual restoration of power.

Question 60

Unit 1 plant conditions:

- A normal shutdown for refueling is in progress
- Intermediate Range detectors decrease but P-6 fails to de-energize as expected
- ABN-701, SOURCE RANGE INSTRUMENT MALFUNCTION is initiated

Based on the above plant conditions, which ONE of the following is correct?

A. This could be the result of the IR detector being undercompensated and ABN-701 will direct the operator to re-energize the SR detectors by placing the SR RX TRIP RESET/BLK switches to the RESET position on CB-7.

B. This could be the result of the IR detector being overcompensated and ABN-701 will direct the operator to re-energize the SR detectors by placing the SR RX TRIP RESET/BLK switches to the RESET position on CB-7.

C. This could be the result of the IR detector being undercompensated and ABN-701 will direct the operator to re-energize the SR detectors by placing the HIGH FLUX AT SHUTDOWN switch to NORMAL on the SOURCE RANGE DRAWER.

D. This could be the result of the IR detector being overcompensated and ABN-701 will direct the operator to re-energize the SR detectors by placing the HIGH FLUX AT SHUTDOWN switch to NORMAL on the SOURCE RANGE DRAWER.

Answer: A

This question matches the KA by requiring knowledge of how to manually restore power to the SR instrumentation when they fail to do so automatically during a shutdown.

Explanation / Plausibility:

A. This is correct. Undercompensation could cause the IR detectors to read high and cause P-6 to stay energized. ABN-701 directs the operator to re-energize the SR detectors by cycling the block/reset switches on CB-7.

B. This is incorrect because undercompensation could cause the IR detectors high. Over compensation would cause P-6 to de-energize above setpoint. It is plausible because it is a common misconception that being overcompensated causes CICs to read high. GFES

C. This is incorrect because the ABN-701 directs the operator to re-energize the SR detectors by using the Block/Reset switches on CB-7. It is plausible because this switch is what is used to block the high flux at shutdown signal. It would seem logical that placing it in normal would restore the SR detectors to their normal shutdown state.

D. This is incorrect but plausible (see B&C).

Technical Reference: (Attach if not previously provided including revision number)	Excore Instrumentation Study Guide

Proposed references to be provided to applicants during examination: _____

Learning Objective: DESCRIBE the components of the Excore Instrumentation system including interrelations with other systems to include interlocks and control loops. (LO21.SYS.EC1.OB03)

Question Source:	Bank #	
	Modified Bank#	
	New	X
Question History:	Last NRC Exam	
Question Cognitive Level	Memory or Fundamental Knowledge	
	Comprehension or Analysis	X
10 CFR Part 55 Content:	55.41	41.7
	55.43	n/a

3.3 Operator Actions

		ACTION/EXPECTED RESPONSE	RESPONSE NOT OBTAINED
☐	1	Verify both IR channels less than P-6 setpoint (1 x 10^{-10} amps).	Perform the following: a. Refer to ABN-702 while continuing this procedure. b. WHEN at least one IR channel is less than the P-6 setpoint, THEN manually re-energize SR channels by momentarily placing the following switches in RESET: • 1/u-N-33A, SR RX TRIP RESET/BLK • 1/u-N-33B, SR RX TRIP RESET/BLK
☐	2	Manually re-energize SR channels by momentarily placing the following switches in RESET as necessary: • 1/u-N-33A, SR RX TRIP RESET/BLK • 1/u-N-33B, SR RX TRIP RESET/BLK	
☐	3	Verify both SR channels operating properly.	Refer to Section 2.0 of this procedure.
☐	4	Refer to Technical Specifications listed in Section 5.1 of this procedure.	
☐	5	Refer to EPP-201.	
☐	6	Initiate a SMART Form per STA-421, as applicable.	
☐	7	Initiate a work request per STA-606.	

1.0 APPLICABILITY

This procedure describes steps to operate the Nuclear Instrumentation System (NIS). Steps to operate the scaler-timer and the audio count rate channel are included. This procedure applies to Unit 1 and Unit 2 operation.

2.0 PREREQUISITES

2.1 Audio Count Rate Channel and Scaler-Timer

☐ • Reactor power is in source range with a Source Range Channel in operation supplying a count rate to audio count rate channel and scaler-timer.

☐ • The AUDIO COUNT RATE CHANNEL (AUDIO POWER ON) and SCALER TIMER (SCALER POWER ON) power lights are ON.

☐ • The Channel Selector is OFF.

3.0 PRECAUTIONS

- The High Flux at Shutdown alarm may be blocked during movement of fuel assemblies; however, the time the alarm remains blocked should be minimized. When the High Flux at Shutdown alarm is blocked in MODE 6, CORE ALTERATIONS may continue as long as source range indications are continuously monitored and Inverse Count Rate Ratio (ICRR) is performed. The High Flux at Shutdown alarm should be reset at the earliest opportunity.

- High voltage switching operations may cause spiking of the Source Range Nuclear Instrumentation System Channels (N-31 and N-32), which could result in a High Flux at Shutdown alarm (Containment evacuation) or a Reactor Trip.

  Switching and Tagging in the switchyard should not be performed in MODE 2. High voltage switching may cause spiking on Source Range NIS Channels.

  Prior to initiation of any high voltage switching (STA-617) with Source Range NIS Channels (N-31 and N-32) being used to satisfy operability requirements, all CORE ALTERATIONS should be suspended due to potential spiking on the Source Range NIS Channels which could cause erroneous indication of source range counts.

INSTRUMENTATION AND CONTROL

SOURCE RANGE INSTRUMENTS N31 AND N32

The Source Range circuitry is specifically designed to provide independent monitoring of leakage neutron flux during shutdown and the initial phase of reactor startup/final phase of reactor shutdown.

The SR channels utilize BF_3 proportional detectors, which along with appropriate circuitry provide relatively high sensitivity. The detectors are wrapped in polyethylene in order to attenuate fast leakage neutrons before they reach the detector, thus increasing the thermal neutron flux seen and making it a more accurate representation of the incore neutron flux. The resolving time of the channel assures the capability of counting up to 10^6 random counts without appreciable dropoff in count rate indication (**Figure 8**).

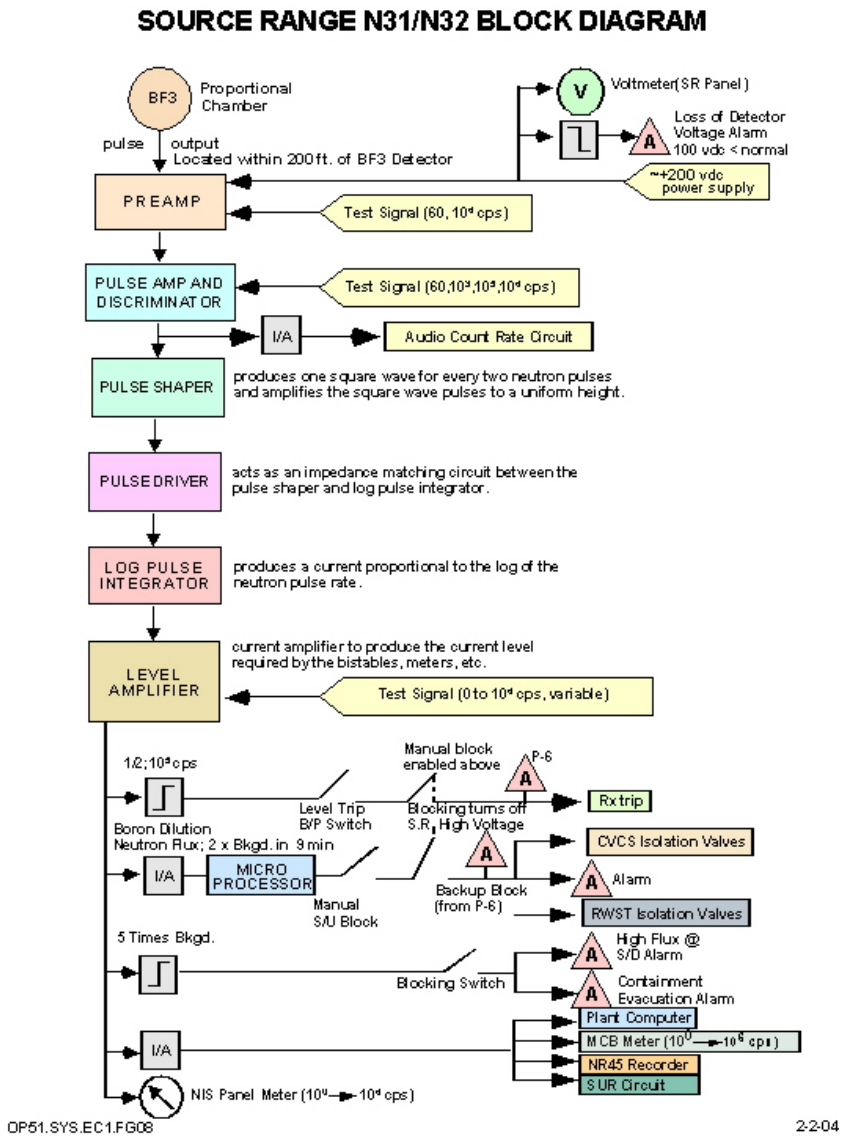

Figure 8 - Source Range N31 & N32 Block Diagram

The remote preamplifier is utilized to achieve a high signal to noise (S/N) ratio over long lengths of field cable. The preamplifier assembly is located just outside the containment. It receives low level neutron pulses detected by the proportional counter. The fixed gain preamplifier optimizes the signal to noise ratio and also furnishes high voltage coupling to the detector. The preamplifier

assembly also generates a 60 and 10^6 cps test signal for test and calibration. It contains filters and a network for matching the high voltage supply to the detector.

The pulse amplifier assembly receives the preamplifier pulses and further amplifies the pulses prior to coupling to a bistable pulse shaper. The pulse amplifier discriminates against noise and gamma by providing an adjustable reference bias against which the input pulse is compared so that unless the input exceeds the bias, no output is produced and thus these pulses will not trigger the bistable Pulse Shaper. This amplifier also provides an isolated output to drive audio circuits for generating an audible signal proportional to the count rate.

The pulse shaper receives pulses from the pulse amplifier and shapes the signal into a square wave. The output waveform is then at a constant amplitude at half the frequency of the input pulse repetition rate since two input pulses are required to produce an output pulse.

The pulse driver receives the constant amplitude pulse from the pulse shaper and provides the drive through impedance matching stages to apply the pulses to a log pulse integrator.

The log pulse integrator receives the positive square wave pulses from the pulse driver assembly and integrates these pulses to provide a voltage output proportional to the logarithm of the average pulse repetition rate. The current is then applied to a current summing resistor and the level amplifier for amplification. This produces a negative dc voltage output. To illustrate the integration and log output of the assembly, let us consider an input from the output of the amplifier discriminator, a signal that could vary by a factor of 10^6 (that is from 1 to 10^6 cps). The output of the log pulse integrator, however, is a signal whose strength or level could vary by a factor of 6 (coinciding with the logarithm of the six decade flux response of the BF_3 counter).

The level amplifier receives the negative dc log-level voltage output from the log pulse integrator. The assembly then amplifies the voltage by a factor of 40 to produce a 0 to +10 volt dc output proportional to the logarithm of the pulse repetition rate. The output voltage is displayed on the front panel of the source range drawer on a meter calibrated in counts-per-second from 10^0 to 10^6 and is also applied to bistable relay drivers and an isolation amplifier.

Two bistable relay driver assemblies (B/S) receive input from the level amplifier. The log level dc voltage applied will trigger the bistables when this voltage exceeds a preset value. A high flux level at shutdown alarm and a level trip are affected by these bistables.

The high flux level at shutdown alarm is visually and audibly annunciated in the Control Room when the setpoint of 5 times background is reached (except during core reload, when setpoint is set per procedure). The audible alarm is also given in the Containment as the Containment evacuation alarm.

The alarm functions are provided to alert the operator of any inadvertent changes in shutdown reactivity. This alarm will be blocked prior to a reactor startup by selecting the block position at the local drawer. The alarm is also blocked automatically by P-10, the SSPS Input Error Inhibit switch in INHIBIT, or when the Source Range trip is blocked, as will be discussed later.

The source range detector signal triggers a bistable input to the Solid State Protection System (SSPS). It will cause a high-level reactor trip at 10^5 cps unless defeated by the operator. It can only be defeated if the permissive P-6 is satisfied (one of the intermediate range channels reads

above 10^{-10} amps). This is equivalent to about 4 x 10^4 cps on the source range instrumentation. To defeat this trip, two switches on the main control board must be turned to the block position.

When this bistable is not in a tripped condition, instrument power will gate a SCR allowing it to conduct. This completes a path for current flow in the primary windings from the control power. The secondary winding current flow will then energize the input relays in SSPS preventing a reactor trip.

Two isolation amplifiers (I/A) also use the 0 to +10 volt signal described above from the level amplifier. The amplifier is a highly linear one-to-one device, which serves only to isolate the source range level signal from faults, which may occur in the remote reactor equipment. The design provides that a short, open or voltage applied to the output will not affect the input signal.

One of the I/A used provides input to the plant computer, MCB indication (2 meters, one/channel), NR45 recorder, and startup rate circuit. The startup rate circuit converts the rate of level change to a startup rate in the range of -0.5 to +5 decades per minute.

The other I/A inputs to the Solid State Protection System to process a source range neutron flux doubling signal. The setpoint for the condition occurs when a running one minute average source range flux increases by a factor of 2.0 greater than any of the previous 9 one minute averages. This will result in a SR FLUX DBLG alarm.

An alarm for loss of detector voltage uses a bistable set at ≈100 vdc < normal voltage. An audible and visible alarm is received at the control board when the condition exists.

On the output of the pulse amp and discriminator the audio count rate circuit receives a signal through an I/A. This circuit provides an audible tone at a rate proportional to the selected source range channel count rate.

Source Range Drawer

Source range instrument drawers, N-31 and N-32 (**Figure 9**), contain the following indications and switches:

- The detector volts x 100 meter monitors the high voltage power supply output to the BF3 for the true voltage reading in the range of 0 to 2500 volts dc.
- The cps neutron level meter indicates the neutron level output of the BF3 counter for the source range channel. The meter indication is in counts per second between 10^0 and 10^6, calibrated logarithmically.
- The instrument power on lamp indicates, when lighted, 118 volt ac instrument power is applied to the drawer power supplies.
- The control power on lamp indicates, when lighted, 118 volt ac control power is applied to the drawer control signal circuit.
- The channel on test lamp indicates, when lighted, the drawer OPERATION SELECTOR switch is in a test position (not in NORMAL).
- The loss of detector volts lamp indicates, when lighted, that the high voltage supplied to the BF_3 proportional counter by the high voltage power supply is removed, or is low due to a fault in the system. The setpoint is 100 vdc below the normal setting.

- The level trip lamp lights when the neutron level detected by the proportional counter exceeds 10^5 cps. The trip condition removes AC voltage from the relay in the input cabinet of the Solid State Protection System.
- The level trip bypass lamp lights when the LEVEL TRIP switch is placed in the BYPASS position to perform test and calibration functions of the source range channel circuits.
- The high flux at shutdown lamp indicates, when lighted, that the detected neutron level exceeds the safe preset level during reactor shutdown. Trip voltage removes ac voltage from remote equipment to give an alarm. Setpoint is 5 times background reached (except during core reload, when setpoint is set per procedure.
- The 118 volt, 5 amp AC instrument power fuses protect the detector drawer assembly power supply circuits against primary power current overloads.
- The 118 volt, 5 amp, AC control power fuses protect the drawer assembly control signal circuit transformers against primary power current overloads.
- The level trip switch is a two position rotary switch, which enables test and calibration of the source range channel in conjunction with the OPERATION SELECTOR switch. In the NORMAL position, the switch is inactive. In the BYPASS position, the LEVEL TRIP BYPASS lamp lights, the OPERATION SELECTOR switch is enabled, and a 118 volt ac signal is provided to prevent a reactor trip condition during test operations.
- The operation selector switch is an eight position rotary switch enabled by the LEVEL TRIP switch being placed in the BYPASS position which permits the generation of test signals for the test and calibration of the source range channel. In the NORMAL position the switch is inactive. In each of the six test positions the CHANNEL ON TEST indicator lights, a test signal oscillator is enabled and a remote relay is energized. In the LEVEL ADJ position, the CHANNEL ON TEST indicator lights and LEVEL ADJ potentiometer is switched into the test circuitry of the drawer assembly.
- The level adjust potentiometer provides an adjustable DC test signal for insertion directly into the level amplifier. This enables the adjustment of the trip level of the various bistable circuits within the drawer assembly. The control is effective only when the OPERATION SELECTOR switch is in the LEVEL ADJ position.
- The high flux at shutdown switch is a two position rotary switch. In the NORMAL position the switch is inactive and is the correct operating position during shutdown. During startup, as the neutron level increases, the BLOCK position is used; in this position a 118 volt ac manual block signal is provided to prevent the shutdown alarm from energizing. The 118 V AC Control Power is sent from the IR to Auxiliary Relay Rack #3, where it energizes a bypass relay. On loss of power to the SR, the fuse FU-3 in ARR #3 must be pulled to prevent the High Flux at Shutdown alarm in the containment.

SOURCE RANGE DRAWER

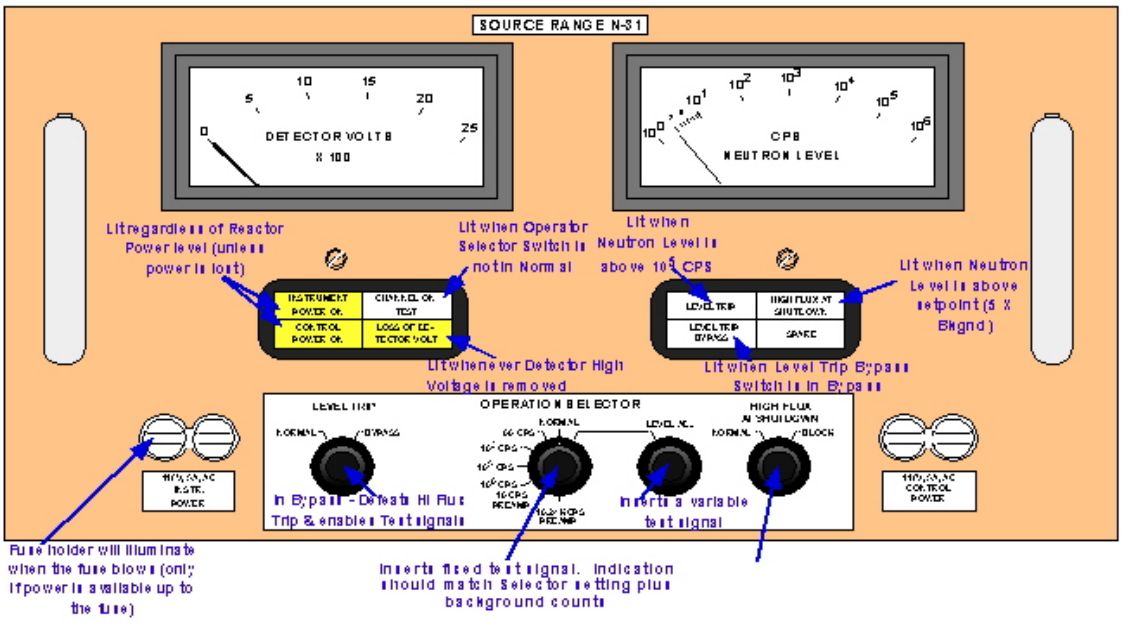

OP51.SYS.EC1.FG09

2-2-04

Figure 9 - Source Range Drawer

•

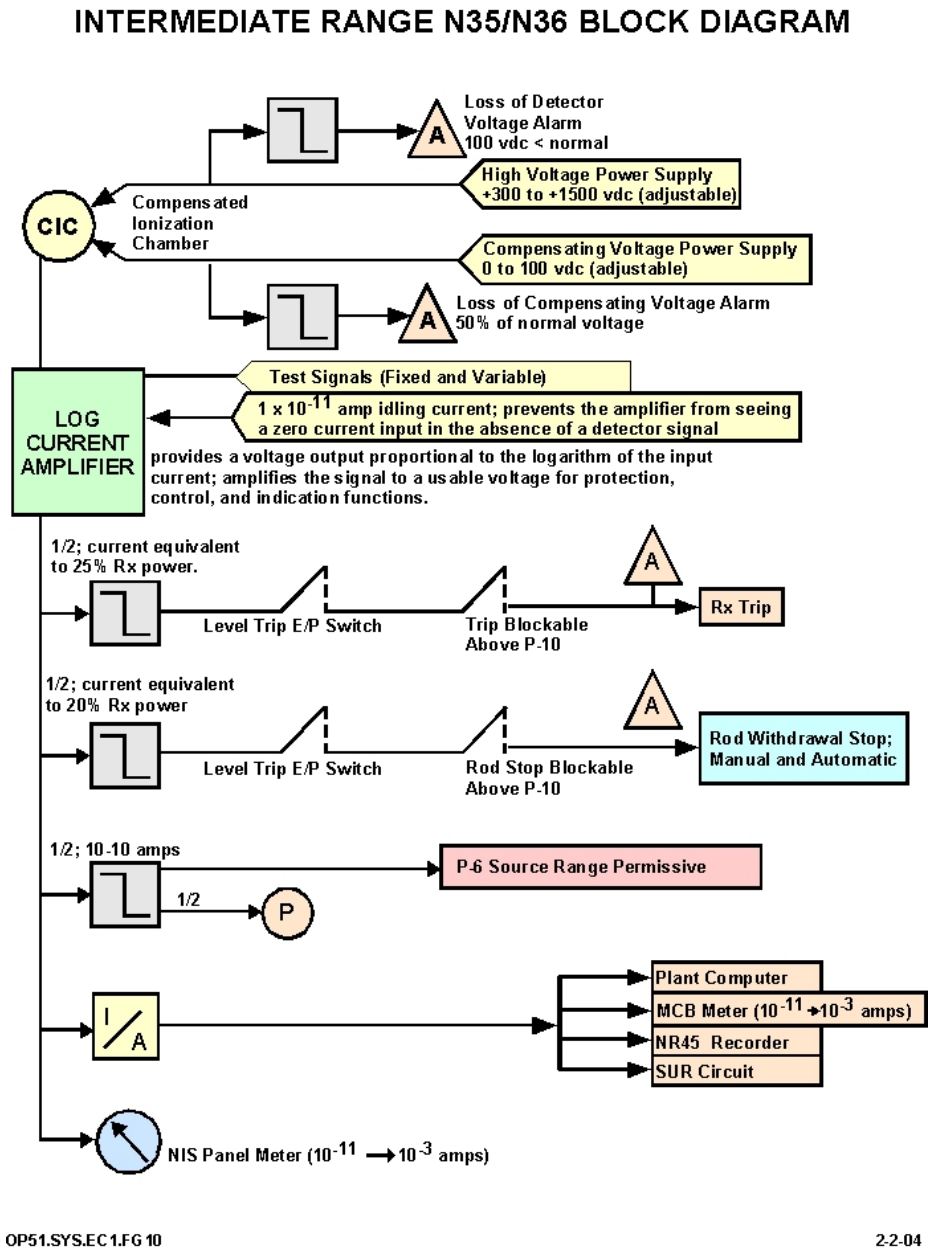

Figure 10 - Intermediate Range N35/N36 Block Diagram

The output from the log current amplifier inputs 3 bistable drivers and an I/A.

A bistable provides input to the Solid State Protection System. It will cause a high level reactor trip at a current equivalent to 25% of full power. This is a one out of two reactor trip. This trip, however, can be manually blocked when permissive circuit P-10 becomes energized. P-10 occurs when reactor power is greater than 10% from two of four power range detectors. The current equivalent of 25% of full power is approximately 6 x 10^{-5} amperes. The bistable reset occurs at 16% RTP (current equivalent) which ensures that a reactor trip will not be generated when < P-10 setpoint.

The intermediate range detector signal triggers a second bistable which inputs to the Rod Control System as a high flux level (low point) rod stop, or C-1. Rod out motion will stop in both the manual and automatic modes if the current equivalent to 20% of full power is reached. This alerts the operator to the fact that he must take administrative action to manually block the intermediate range high level and power range (low power), level trips to prevent an inadvertent trip during normal power increase. This ensures that a reactor trip at 25% of full power does not occur. Blocking the intermediate range reactor trip at the control board blocks the rod stop. The bistable reset occurs at 14% RTP (current equivalent).

A third bistable is used to input the P-6 permissive circuit. The P-6 permissive circuit is energized during reactor startup when 1 out of the 2 intermediate range channels reaches 10^{-10} amperes. This corresponds to a source range count-rate of approximately 4×10^{4} cps. Once the P-6 permissive light is on, the source range trip can be manually blocked. Blocking the source range trip automatically turns off the source range detector high voltage. During reactor shutdown, the source range trip and detector high voltage is automatically activated when both intermediate range channels drop below 10^{-10} amperes (the actual reset is 5×10^{-11}amperes) as P-6 is de-energized. In the event of an under compensation problem with either intermediate range detector (P-6 fails to de-energize), the source range may be manually activated by going to reset on the switches on the Control Board CB -7.

An isolation amplifier is used to provide several indications and recording functions:

- Two I.R. level meters, one per channel, are located on the control board.
- NR 45 recorder records both I.R. channels, but as 0-100% not 10^{-11} to 10^{-3} amps.
- The plant computer uses the input for processing and recording.
- The startup rate circuit and associated control board meters provide a dpm rate indication while in the I.R.

Examination Outline Cross-Reference	Level	RO	SRO
Rev. Date: 1/18/2015	Tier #	1	n/a
Change: 3	Group #	2	n/a
	K/A #	059 AK2.01	n/a
Level of Difficulty: 2	Importance Rating	2.7	n/a

Accidental Liquid RadWaste Release: Knowledge of the interrelations between the Accidental Liquid Radwaste Release and the following: Radioactive-liquid monitors.

Question 61

Unit 1 plant conditions:

- Waste Monitor Tank (WMT) 1 is to be discharged to U1 CW system
- All approvals and samples have been attained
- The discharge is started and flow throttled to 75 gpm

Based on the above plant conditions, which ONE of the following describes the expected system operation?

A. The initial flow rate is within STA-603, CONTROL OF STATION RADIOACTIVE EFFLUENTS limits and if the associated radiation monitor reaches the high alarm setpoint, LWPS DISCHARGE ISOLATION VALVE X-RV-5253 will close to isolate the release.

B. The initial flow rate is within STA-603, CONTROL OF STATION RADIOACTIVE EFFLUENTS limits and if the associated radiation monitor reaches the high alarm setpoint, PLANT DISCHARGE TO CIRC WATER ISOLATION VALVE, 1-HV-WM181 will close to isolate the release.

C. The initial flow rate is NOT within STA-603, CONTROL OF STATION RADIOACTIVE EFFLUENTS limits and if the associated radiation monitor reaches the high alarm setpoint, LWPS DISCHARGE ISOLATION VALVE X-RV-5253 will close to isolate the release.

D. The initial flow rate is NOT within STA-603, CONTROL OF STATION RADIOACTIVE EFFLUENTS limits and if the associated radiation monitor reaches the high alarm setpoint, PLANT DISCHARGE TO CIRC WATER ISOLATION VALVE, 1-HV-WM181 will close to isolate the release.

Answer: A

This question matches the KA by requiring knowledge of how the liquid rad waste monitor functions in the event of an accidental rad release.

Explanation / Plausibility:

A. Correct because the release rate limit is 100 gpm. It is plausible because if it were 75 gpm it could be thought that it was below a minimum limit. Part 2 is correct; X-RV-5253 will automatically close if the high alarm setpoint is reached on X-RE-5253.

B. Part 1 is correct because the release rate limit is 100 gpm. The valve is also incorrect. The valve is plausible because the valve does have automatic isolations but a high radiation alarm is not one of them.

C. Incorrect but plausible (see A & B).

D. Incorrect but plausible (see A & B).

Technical Reference: (Attach if not previously provided including revision number)	ABN-903 Liquid Waste Processing Study Guide

Proposed references to be provided to applicants during examination: _____

Learning Objective: **STATE** the functions, operation and interlocks of the following LIQUID WASTE PROCESSING System components:

1. Floor Drain Tanks 1, 2 & 3 and associated equipment
2. Waste Holdup Tank & Waste Evaporator Feed Pump
3. Chemical Drain Tank and associated equipment
4. Laundry Hot Shower Tank and associated equipment
5. Waste Monitor Tanks 1 & 2 and associated equipment
6. Laundry Holdup Monitor Tanks 1 & 2 and associated equipment
7. Plant Effluent Holdup & Monitor Tanks 1 & 2 and associated equipment
8. X-RE-5253
9. X-FIS-5253
10. X-RV-5253

Question Source:	Bank #	
	Modified Bank#	
	New	X
Question History:	Last NRC Exam	
Question Cognitive Level	Memory or Fundamental Knowledge	X
	Comprehension or Analysis	

10 CFR Part 55 Content:	55.41	41.7
	55.43	n/a

2.0 ACCIDENTAL RELEASE OF RADIOACTIVE LIQUID

2.1 Symptoms

a. Annunciator Alarms

Main Control Board

- LWPS PNL TRBL (6B-4.7)

LWPS PANEL

- LWPS EFFLUENT MONITOR ALERT (2.6)

b. Plant Indications

1) An unexpected increase in any of the following liquid process effluent monitors:

- X-RE-5251A (ABP074) LVW/EVAP POND VNT & DRN HDR RADIATION DETECTOR 5251A
- X-RE-5253 (LWE076) LIQUID WASTE PROCESSING DISCHARGE RADIATION DETECTOR
- u-RE-4269 (SSWu65) UNIT u STATION SERVICE WATER TRAIN A TO DISCH CANAL RAD DETECTOR
- u-RE-4270 (SSWu66) UNIT u STATION SERVICE WATER TRAIN B TO DISCH CANAL RAD DETECTOR
- 1-RE-5100 (TBD172) TURBINE BUILDING SUMP 1-02 RADIATION DETECTOR
- 2-RE-5100 (TBD272) TURBINE BUILDING SUMP 2-04 RADIATION DETECTOR

2) Waste Water Hold-up Tank or piping leak or spill reported by Plant Personnel.

2.2 Automatic Actions

a. A High Alarm on X-RE-5251A will realign sump discharge from the LVW system to the COW system.

b. A High Alarm on X-RE-5253 the Liquid Waste discharge process radiation monitor closes X-RV-5253 Liquid Waste Discharge Isolation Valve.

c. A High Alarm on the Turbine Building Sump 1-02/2-04 discharge monitor u-RE-5100 will realign sump discharge from the LVW system to the COW system.

CPSES ABNORMAL CONDITIONS PROCEDURES MANUAL	UNIT 1 AND 2	PROCEDURE NO. ABN-903
ACCIDENTAL RELEASE OF RADIOACTIVE LIQUID	REVISION NO. 6	PAGE 4 OF 13

2.3 Operator Actions

ACTION/EXPECTED RESPONSE	RESPONSE NOT OBTAINED
1 Check Radiation Monitoring System (PC-11) to determine which liquid process system is in alarm.	
☐ a. Verify Liquid Waste Discharge - NO UNEXPECTED INCREASE • LWE076 (X-RE-5253), LWPS EFL	a. GO TO Step 2.

CPSES ABNORMAL CONDITIONS PROCEDURES MANUAL	UNIT 1 AND 2	PROCEDURE NO. ABN-903
ACCIDENTAL RELEASE OF RADIOACTIVE LIQUID	REVISION NO. 6	PAGE 5 OF 13

2.3 Operator Actions

ACTION/EXPECTED RESPONSE	RESPONSE NOT OBTAINED
NOTE: • X-HS-5253 is a Key-Operated Switch for X-RV-5253 and requires flow to be established to remain OPEN with hand switch in "AUTO". One indication of sufficient flow is alarm window 2.6 clears (LWPS EFFLUENT ALERT). • A High Alarm on X-RE-5253 the Liquid Waste discharge process radiation monitor closes X-RV-5253 Liquid Waste Discharge Isolation Valve. • Key for X-HS-5253 is obtained from Shift Supervisor and use is controlled by RWS-103.	
☐ 2 Verify the Liquid Waste Processing Discharge - LWPS EFFLUENT MONITOR ALERT - DARK • X-LP-01 (AB 790 Rm X-174 LWPS Panel)	Ensure liquid waste processing discharge valve CLOSED • X-HS-5253, Laundry Holdup & Monitor Tank Discharge Valve

LWPS DISCHARGE RADIATION MONITOR X-RE-5253

X-RE-5253 provides radiation process monitoring of liquids leaving the LWPS going to either unit's Circ Water System. It has an adjustable alarm setpoint that will close downstream isolation valve X-RV-5253 when the setpoint is reached to stop the discharge. In addition, the radiation element feeds a RM-80 microprocessor that transmits data to the PC-11 radiation-monitoring terminal in the control room.

In order for X-RE-5253 to operate it must have a minimum amount of sample flow. By throttling XWP-0119, a differential pressure is created between the inlet and outlet sample connections. This differential pressure causes sample flow to be directed through the rad monitor.

To initiate a discharge, XWP-0119 is first throttled open approximately 2 turns. Then the discharge valve, X-RV-5253 is opened. The operator then verifies proper sample flow and adjusts XWP-0119 as needed to obtain proper flow.

LWPS DISCHARGE ISOLATION VALVE X-RV-5253

X-RV-5253 is an air operated diaphragm valve which is operated from the LPP with a 3-position key operated switch which spring returns to "AUTO" from the "OPEN" position. The valve fails closed on a loss of instrument air.

X-HS-5253, Liquid Waste Processing Effluent Handswitch, is a 3-position key operated switch which spring returns to "AUTO" from the "OPEN" position. When opening this valve, hold the switch in the "open" position for 10 seconds before letting it spring return to "Auto" to keep the valve from closing erroneously. This allows time for sample flow to be established.

In the "OPEN" position, the solenoid is energized allowing air to pass to the diaphragm opening the valve. When the handswitch is released from the "OPEN" position, the valve will close if the following are not met (See Figure 10):

- 2 of 4 Circulating Water Pumps operating in either Unit;
- No high radiation alarm on Radiation Monitor Channel 5253; and
- Radiation Monitor Channel 5253 operating without:
    1. A circuit failure
    2. Loss of counts
    3. Channel out of service; or
    4. Loss of Sample Flow

The channel also provides for a "HI RAD" alarm on the annunciator panel on the Liquid Waste Processing Panel. This alarm will be generated if any of the following occur:

- Hi Radiation on X-RE-5253
- A circuit failure
- Loss of counts
- Channel out of service; or
- Loss of Sample Flow

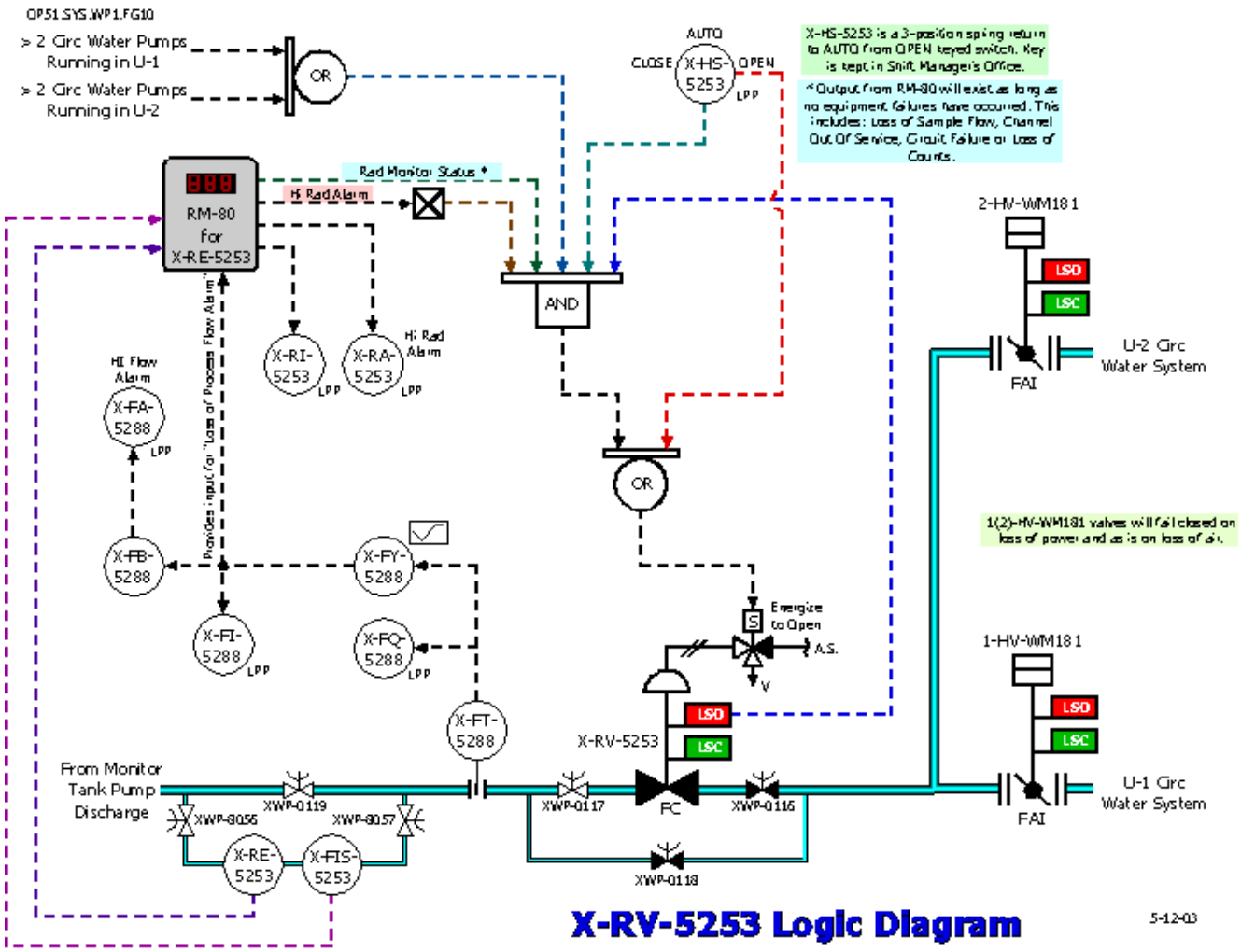

Figure 1 X-RV-5253 Logic Diagram

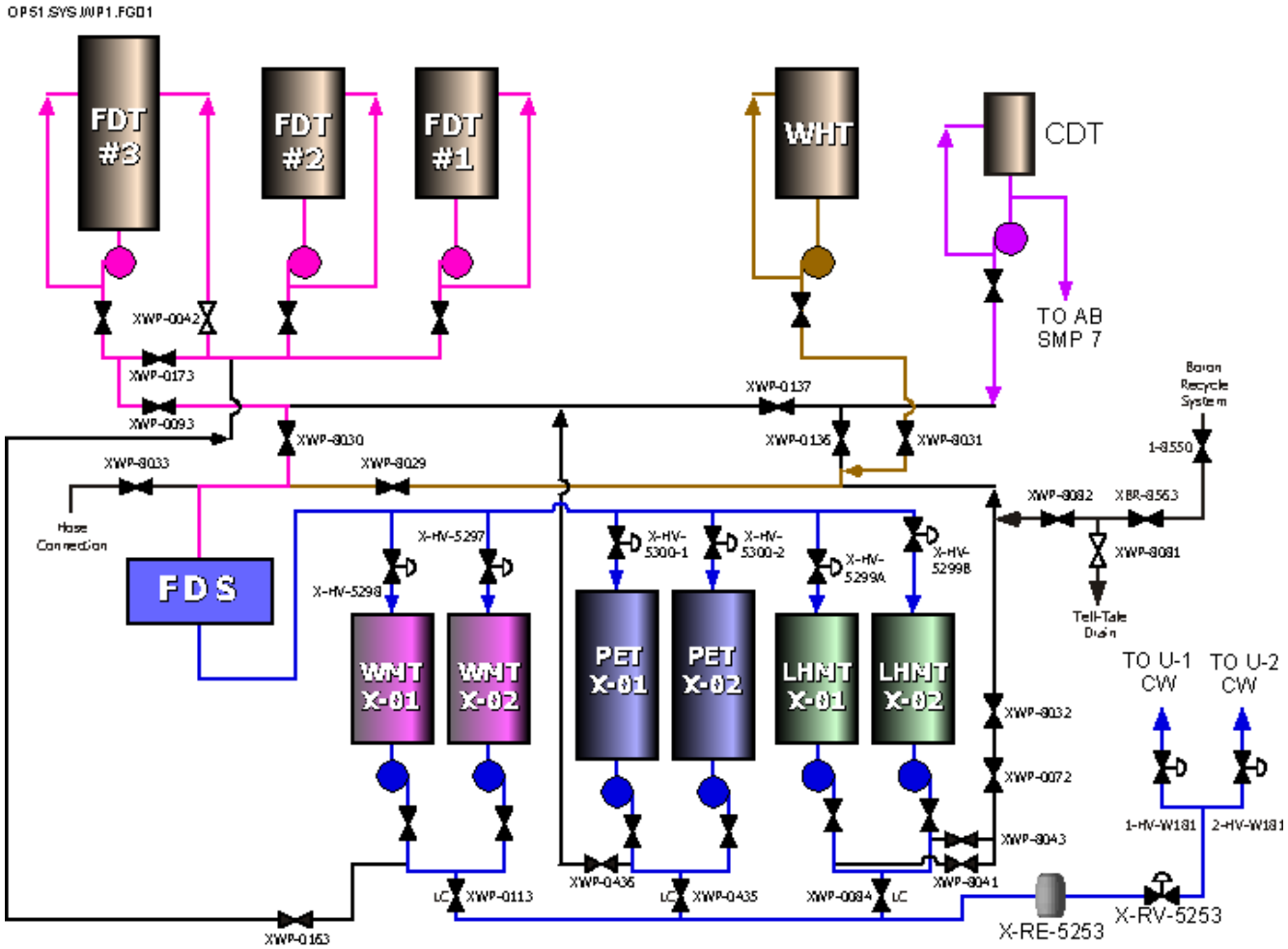

LWPS Simplified Diagram

DISPOSAL SUBSYSTEM

When it becomes necessary to process a tank the operator will choose which monitor tank to send the processed water to. This will normally be a PET since they are 3 times the size of the WMTs and LHMTs. Once processing has begun, the operator will monitor tank level intermittently to ensure the tank is not overfilled.

Once a tank is full or processing is complete the processing lineup will be secured. At this point the determination is made on whether to discharge the tank or wait until it can be filled further. Since the paperwork required, to perform a tank discharge, is time consuming it is not cost effective to discharge a tank that is partially filled. Normally, paperwork will not be submitted to discharge a Monitor Tank until it is at least 70 to 80% full. In the case of a PET, this equates to > 16'.

Once it has been determined to discharge a tank, it will be placed in recirculation and the paperwork (STA-603 form 10) submitted to Chemistry. Chemistry will sample the tank and analyze for radioactivity and environmental parameters (pH, Oil & Grease, TSS). At this point, dose projections are performed and verified and the paperwork is returned to Radwaste Personnel.

The Radwaste Operator should verify all paperwork is properly completed and the tank meets administrative guidelines for discharge. These guidelines can be found in the back of RWS-103 and RWS-104. At this point the operator will line up the system to discharge the tank. This will include verifying that the Discharge Radiation Monitor (X-RE-5253) setpoints are correct and getting approval to perform the discharge from the Shift Manager.

Once the initial lineup is complete then another operator will verify the lineup. At this point the Control Room is contacted to verify with the Shift Manager that the discharge can be performed. At this point the discharge is started and sample flow through X-RE-5253 is verified and adjusted as necessary. Once the discharge is started the operator must also verify the discharge flowrate to ensure that the maximum discharge flow is not exceeded. The maximum discharge flow allowed should normally be 100 gpm. This is verified to ensure that we meet out minimum dilution flow requirements per the Offsite Dose Calculation Manual (ODCM).

In the event the discharge isolates due to loss of sample flow while initiating the release, the release may be re-initiated. However, if this occurs after the initial adjustment then the release must be secured and all paperwork re-submitted.

In the event the discharge isolates for any reason (except as discussed previously) then the discharge must be secured and all paperwork re-initiated. You CANNOT restart the release.

Once the pump trips on low tank level, X-RE-5253 is flushed using Demin Water, the lineup is secured and paperwork completed. This includes verifying the amount of gallons discharged and the average flowrate during the release. X-RE-5253 setpoints must also be returned to their default value and verified. A copy is made of the discharge paperwork where the original is returned to Chemistry and Radwaste Operations keeps a copy.

PLANT DISCHARGE TO CIRC WATER ISOLATION VALVES 1(2)-HV-WM181

These valves are used to direct liquid waste flow from the plant to either unit's Circ Water System and eventually Squaw Creek Reservoir. This includes the Liquid Waste Processing System, Waste Management System (LVW) and the Co-Current Waste System.

The point at which the piping splits to go to either unit is classified as Outfall 004. It is from this point at which Chemistry is required to take samples to ensure we meet government regulations for discharge to the environment.

Instrumentation & Control

Controls and indications for 1(2)-HV-WM181 are provided on the Co-Current Waste Panel. These are 3 position (maintained) switches "CLOSE/AUTO/OPEN" (See Figure 11).

- CLOSE position - associated valve is closed (solenoid de-energized)
- AUTO position - valve will close if have < 2 Circ Water pumps running in the associated unit. In addition, if both valves are in AUTO then 1-HV-WM181 has priority to be open. If the open signal for 1-HV-WM181 goes away then 2-HV-WM181 would automatically open.
- OPEN position – valve is open and all interlocks are bypassed.

Both valves are powered from the Co-Current Waste Panel.

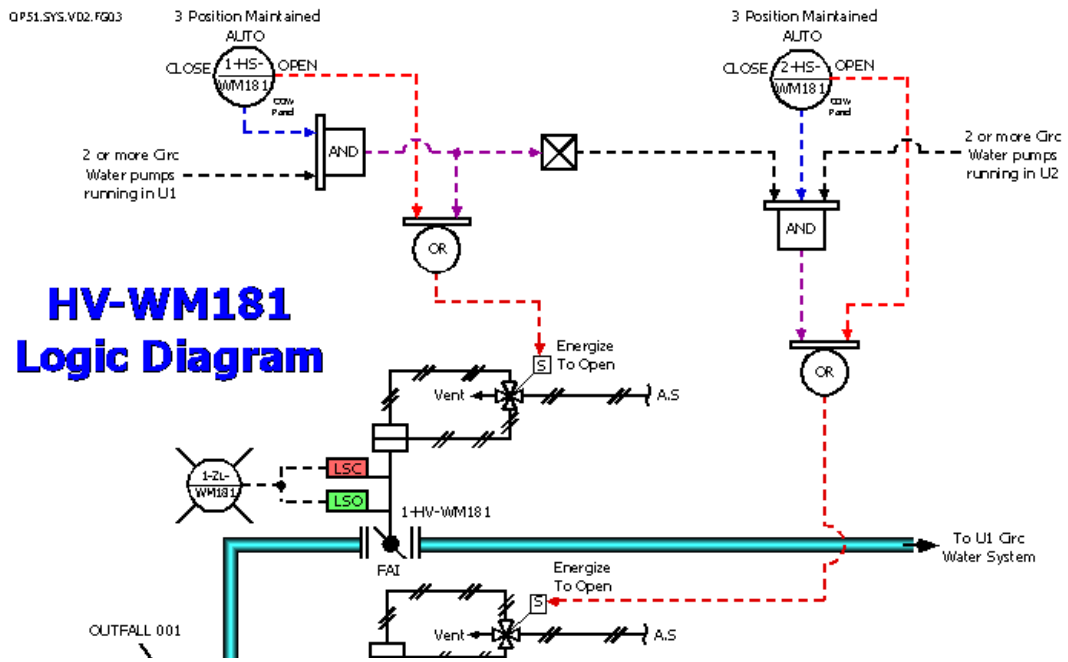

Figure 2 HV-WM181 Logic Diagram

Examination Outline Cross-Reference	Level	RO	SRO
Rev. Date:11/24	Tier #	1	n/a
Change: 0	Group #	2	n/a
	K/A #	074 EA2.2	n/a
Level of Difficulty: 4	Importance Rating	3.3	n/a

Inad. Core Cooling: Ability to determine and interpret the following as they apply to the (Saturated Core Cooling): Adherence to appropriate procedures and operation within the limitations in the facility's license and amendments.

Question 62:

Unit 2 initial plant conditions:

- SBLOCA occurs
- CCP-2-01 fails to start
- CCP-2-02 trips
- RCPs are NOT operating
- FRC-0.1A, RESPONSE TO INADEQUATE CORE COOLING is in progress
- Core exit TCs > 1200 ^{O}F
- Containment pressure = 6 psig increasing

Current plant conditions:

- ALL SG NR Levels = 45%
- Core exit TCs = 850 ^{O}F stable
- RWST level = 35%

Based on current plant conditions, which ONE of the following is correct?

A. The crew should Go To EOS-1.3A, TRANSFER TO COLD LEG RECIRCULATION

B. AFW flow should be increased to all SGs

C. ONE RCP should be started

D. Rx Vessel Head vents should be opened

Answer: B

This question matches the KA by requiring knowledge of the Inadequate Core Cooling procedure.

Explanation / Plausibility:

A. Incorrect because transfer to EOS-1.3A is not made until RWST is at the LO-LO level setpoint (33%). It is plausible because the LO Level alarm is in.

B. This is correct. ACC conditions exist so NR SG level should be maintained 50-60%.

C. Incorrect because SG level is inadequate. Plausible because if ACC conditions existed, it would be correct.

D. Incorrect because to open the vents, Core exit TCs would have to be > 1200 ^{O}F. It is plausible because the PORVS could be opened in this situation.

Technical Reference: (Attach if not previously provided including revision number)	FRC-0,1A RESPONSE TO INADEQUATE CORE COOLING ECCS Study Guide

Proposed references to be provided to applicants during examination: _____

Learning Objective: Given a procedural Step, NOTE, or CAUTION, **DISCUSS** the reason or basis for the Step, NOTE, or CAUTION in FRC-0.1. (LO21.ERG.FC1.OB04)

Question Source:	Bank #	
	Modified Bank#	
	New	X
Question History:	Last NRC Exam	
Question Cognitive Level	Memory or Fundamental Knowledge	
	Comprehension or Analysis	X
10 CFR Part 55 Content:	55.41	
	55.43	n/a

This is a tough one. Need to make sure ops is ok with this level of knowledge for an RO.

ECCS Study Guide

u-ALB-4B/1.8, "RWST 2 OF 4 LVL LO-LO" alarms when 2 of the 4 level channels are ≤ 33 %. This alarm informs the operator that the setpoint for automatic switchover to containment recirculation has been reached. If a Safety Injection exists, u-8811A and u-8811B open and the operator is directed to EOS-1.3, which completes the swap to Cold Leg Recirculation.

CPNPP EMERGENCY RESPONSE GUIDELINES	UNIT 1	PROCEDURE NO. FRC-0.1A
RESPONSE TO INADEQUATE CORE COOLING	REVISION NO. 8	PAGE 3 OF 45

STEP	ACTION/EXPECTED RESPONSE	RESPONSE NOT OBTAINED
	CAUTION: RHR pumps should not pump water greater than 120°F without CCW to the RHR system.	
** 1	Check RWST Level - GREATER THAN LO-LO LEVEL	Go to EOS-1.3A, TRANSFER TO COLD LEG RECIRCULATION.
2	Verify ECCS Valve Alignment - PROPER EMERGENCY ALIGNMENT PER ATTACHMENT 2	Manually align valves as necessary.

STEP	ACTION/EXPECTED RESPONSE	RESPONSE NOT OBTAINED
3	Verify ECCS Flow In All Trains: • CCP safety injection flow indicator - CHECK FOR FLOW • SI pump flow indicators - CHECK FOR FLOW • RHR pump flow indicators - CHECK FOR FLOW	Start pumps and align valves as necessary. Continue efforts to establish flow: CCP, SI, RHR. Establish flow from any other form of RCS injection available. Establish charging via PD charging pump from the RWST or VCT: a. Perform the following: 1) **IF** the diesels are running, **THEN** place both DG EMER STOP/START handswitches in START. 2) Reset SI. 3) Reset SI sequencers. 4) Reset Containment Isolation Phase A and Phase B. 5) Reset Containment Spray signal.

STEP	ACTION/EXPECTED RESPONSE	RESPONSE NOT OBTAINED
		b. Realign charging system and start PD charging pump: 1) Ensure CCW non-safeguards loop flow established. 2) **IF** CCW flow to RCP thermal barriers is lost, **THEN** isolate seal injection to affected RCP(s) before starting PD pump. 3) Open charging line isolation valves: • 1/1-8105 • 1/1-8106 4) **IF** the PD pump is supplied from the VCT, **THEN** open PD pump suction vent valves: • 1/1-8202A and 1/1-8202B 5) Place PD pump speed controller in manual for 55% demand. 6) Ensure 1/1-8109 - OPEN 7) Start PD pump. 8) Ensure 1/1-8109 - CLOSED 9) Raise PD pump speed controller for maximum charging flow. 10) **IF** seal injection NOT isolated, **THEN** adjust seal flow to RCPs to maintain between 6 gpm and 13 gpm.

STEP	ACTION/EXPECTED RESPONSE	RESPONSE NOT OBTAINED
	CAUTION: RCS letdown or RCP seal return to VCT should not be initiated if core damage is suspected or is imminent due to radiological concerns unless recommended by Plant Staff. If initiated, a plant announcement should be made to identify radiation level increase in the affected areas.	
4	Check RCP Support Conditions - AVAILABLE PER ATTACHMENT 3	Establish support conditions.
5	Check Accumulator Injection Valve Status:	
	a. Power to injection valves - AVAILABLE	a. Restore power to injection valve(s).
	b. Injection valves - OPEN	b. Open injection valve(s) unless closed after accumulator discharge.
6	Check Core Exit TCs - LESS THAN 1200°F	Go to Step 9. OBSERVE NOTE PRIOR TO STEP 9.
7	Check RVLIS Indication:	
	a. RVLIS indication - GREATER THAN OR EQUAL TO 11 IN ABOVE CORE PLATE LIGHT LIT	a. Go to Step 8.
	b. Return to procedure and step in effect.	
8	Check Core Exit TCs:	
	a. Core exit TCs - LESS THAN 750°F	a. IF decreasing, THEN return to Step 1. IF NOT, THEN go to Step 9. OBSERVE NOTE PRIOR TO STEP 9.
	b. Return to procedure and step in effect.	

STEP	ACTION/EXPECTED RESPONSE	RESPONSE NOT OBTAINED
	NOTE: This procedure should be continued while obtaining hydrogen sample in Step 9.	
9	Check Containment Hydrogen Concentration:	
	a. Obtain a hydrogen concentration measurement using containment hydrogen monitoring system per Attachment 4.	a. Contact Chemistry to obtain grab samples for explosive gas analysis.
	b. Hydrogen concentration - LESS THAN IN 0.5% DRY AIR	b. Notify Plant Staff to determine if additional recovery actions are necessary.
*10	Check CST Level - GREATER THAN 10%	Perform ABN-305, AUXILIARY FEEDWATER SYSTEM MALFUNCTION while continuing with this procedure.

STEP	ACTION/EXPECTED RESPONSE	RESPONSE NOT OBTAINED
	CAUTION: A faulted or ruptured SG should not be used in subsequent steps unless no intact SG is available.	
*11	Check Intact SG Levels:	
	a. Narrow range level - GREATER THAN 43% (50% FOR ADVERSE CONTAINMENT)	a. Maintain total AFW flow greater than 460 gpm until narrow range level greater than 43%(50% FOR ADVERSE CONTAINMENT) in at least one intact SG. **IF** total AFW flow greater than 460 gpm can **NOT** be established, **THEN** continue attempts to establish a heat sink in at least one SG and go to Step 20. OBSERVE NOTE PRIOR TO STEP 20
	b. Control AFW flow to maintain narrow range level between 43% (50% FOR ADVERSE CONTAINMENT) and 60%.	
12	Check RCS Vent Paths:	
	a. Power to PRZR PORV block valves - AVAILABLE	a. Locally restore power to block valve(s).
	b. PRZR PORVs - CLOSED	b. Manually close PRZR PORV(s). **IF** any valve can **NOT** be closed, **THEN** manually close its block valve.
	c. Block valves - AT LEAST ONE OPEN	c. Manually open block valve unless it was closed to isolate an open PRZR PORV.
	d. Reactor vessel head vents - CLOSED	d. Manually close reactor vessel head vent(s).
	e. PRZR vents - CLOSED	e. Manually close PRZR vent(s).

STEP	ACTION/EXPECTED RESPONSE	RESPONSE NOT OBTAINED
	NOTE: Partial uncovering of SG tubes is acceptable in the following steps.	
	NOTE: After the low steamline pressure SI signal is blocked, main steamline isolation will occur if the high steam pressure rate setpoint is exceeded.	
*13	Depressurize All Intact SGs To 170 PSIG:	
	a. Dump steam to condenser at maximum rate and avoid main steam isolation.	a. Manually or locally dump steam at maximum rate from intact SG(s) atmospheric.
	b. **WHEN** PRZR pressure is less than 1960 psig, **THEN** block low steamline pressure SI signal.	
	c. Check SG pressures - LESS THAN 170 PSIG	c. **IF** SG pressure decreasing, **THEN** return to Step 11. OBSERVE CAUTION PRIOR TO STEP 11. **IF NOT**, **THEN** go to Step 20. OBSERVE NOTE PRIOR TO STEP 20.
	d. Check RCS hot leg temperatures - AT LEAST TWO LESS THAN 380°F	d. **IF** RCS hot leg temperatures decreasing, **THEN** return to Step 11. OBSERVE CAUTION PRIOR TO STEP 11. **IF NOT**, **THEN** go to Step 20. OBSERVE NOTE PRIOR TO STEP 20.
	e. Stop SG depressurization.	

STEP	ACTION/EXPECTED RESPONSE	RESPONSE NOT OBTAINED
*14	Check If Accumulators Should Be Isolated:	
	a. At least two RCS hot leg temperatures - LESS THAN 380°F	a. Go to Step 20. OBSERVE NOTE PRIOR TO STEP 20.
	b. Check power to injection valves - AVAILABLE	b. Restore power to injection valve(s).
	c. **IF** the diesels are running, **THEN** place both D/G EMER STOP/START handswitches in START.	
	d. Reset SI.	d. Reset SI per EOP-0.0A, REACTOR TRIP OR SAFETY INJECTION, Attachment 9.
	e. Reset SI sequencers.	

STEP	ACTION/EXPECTED RESPONSE	RESPONSE NOT OBTAINED
	f. Close all accumulator injection valves.	f. Vent any unisolated accumulator: 1) Establish Instrument Air to Containment, if necessary: A) Reset Containment Isolation Phase A and Phase B. B) Ensure air compressor running and establish instrument air to containment. 2) Close SI/PORV ACCUM N2 ISOL VLV, 1/1-8880. 3) Open the unisolated accumulator(s) nitrogen vent valve. 4) Open ACCUM 1•4 VENT CTRL, 1-HC-943. 5) Continue with Step 15. **WHEN** the accumulator is depressurized, **THEN**: A) Close ACCUM 1•4 VENT CTRL, 1-HC-943. B) Close the accumulator(s) nitrogen vent valve. C) Open 1/1-8880. **IF** accumulator can **NOT** be vented, **THEN** consult Plant Staff to determine contingency actions.

STEP	ACTION/EXPECTED RESPONSE	RESPONSE NOT OBTAINED
15	Stop All RCPs.	
16	Depressurize All Intact SGs To Atmospheric Pressure:	
	a. Dump steam to condenser at maximum rate and avoid main steam isolation.	a. Manually or locally dump steam at maximum rate from intact SG(s) atmospheric.

STEP	ACTION/EXPECTED RESPONSE	RESPONSE NOT OBTAINED
17	Verify ECCS Flow: • CCP safety injection flow indicator - CHECK FOR FLOW -OR- • SI pump flow indicators - CHECK FOR FLOW -OR- • RHR pump flow indicators - CHECK FOR FLOW	Continue efforts to establish ECCS flow: CCP, SI, RHR. Establish flow from any form of RCS injection available. Establish charging via PD charging pump from the RWST or VCT: a. Perform the following: 1) <u>IF</u> the diesels are running, <u>THEN</u> place both DG EMER STOP/START handswitches in START. 2) Reset SI. 3) Reset SI sequencers. 4) Reset Containment Isolation Phase A and Phase B. 5) Reset Containment Spray.

STEP	ACTION/EXPECTED RESPONSE	RESPONSE NOT OBTAINED
		b. Realign charging system and start PD charging pump: 1) Ensure CCW non-safeguards loop flow established. 2) **IF** CCW flow to RCP thermal barriers is lost, **THEN** isolate seal injection to affected RCP(s) before starting PD pump. 3) Open charging line isolation valves: • 1/1-8105 • 1/1-8106 4) **IF** the PD pump is supplied from the VCT, **THEN** open PD pump suction vent valves: • 1/1-8202A and 1/1-8202B 5) Place PD pump speed controller in manual for 55% demand. 6) Ensure 1/1-8109 - OPEN 7) Start PD pump. 8) Ensure 1/1-8109 - CLOSED 9) Raise PD pump speed controller for maximum charging flow. 10) **IF** seal injection **NOT** isolated, **THEN** adjust seal flow to RCP(s) to maintain between 6 gpm and 13 gpm. If core exit TCs less than 1200°F, **THEN** return to step 16. **IF NOT**, **THEN** go to 20. OBSERVE NOTE PRIOR TO STEP 20.

STEP	ACTION/EXPECTED RESPONSE	RESPONSE NOT OBTAINED
18	Check Core Cooling:	
	a. Core exit TCs - LESS THAN 1200°F	a. Go to Step 20. OBSERVE NOTE PRIOR TO STEP 20.
	b. At least two RCS hot leg temperatures - LESS THAN 350°F	b. Return to Step 16.
	c. RVLIS indication - GREATER THAN OR EQUAL TO 11 IN ABOVE CORE PLATE LIGHT LIT	c. Return to Step 16.
19	Go To EOP-1.0A, LOSS OF REACTOR OR SECONDARY COOLANT, Step 11.	

STEP	ACTION/EXPECTED RESPONSE	RESPONSE NOT OBTAINED

NOTE: Normal support conditions are desired but not required for starting the RCPs.

20	Check If RCPs Should Be Started:	
	a. Core exit TCs - GREATER THAN 1200°F	a. Go to Step 21.

STEP	ACTION/EXPECTED RESPONSE	RESPONSE NOT OBTAINED
	b. Check if an idle RCS cooling loop is available: • Narrow range SG level - GREATER THAN 43% (50% FOR ADVERSE CONTAINMENT) -AND- • RCP in associated loop - AVAILABLE <u>AND</u> <u>NOT</u> RUNNING	b. Perform the following: 1) Reset SI. A) Main Control Board Train A - 1/1SIRA Train B - 1/1SIRB B) Local at SSPS cabinets per EOP-0.0A, REACTOR TRIP OR SAFETY INJECTION, Attachment 9. 2) Reset Containment Isolation Phase A and Phase B. 3) Ensure air compressor running and establish instrument air to containment. 4) Ensure ACCUM 1•4 VENT CTRL, 1-HC-943 - CLOSED 5) Open SI/PORV ACCUM N2 ISOL VALVE, 1/1-8880 6) Open all PRZR PORVs and block valves. 7) <u>IF</u> core exit TCs remain greater than 1200°F, <u>THEN</u> open all vent paths to containment: • Reactor vessel head vents. • PRZR vents. 8) Go to Step 21.
	c. Start RCP in one idle RCS cooling loop. d. Return to Step 20a.	

STEP	ACTION/EXPECTED RESPONSE	RESPONSE NOT OBTAINED
[R] 21	Depressurize All Intact SGs To Atmospheric Pressure:	
	a. Make plant announcement and notify Plant Staff of steam release.	
	b. Dump steam to condenser at maximum rate and avoid main steam isolation.	b. Manually or locally dump steam at maximum rate from intact SG(s) atmospheric. **IF** no intact SG available, **THEN** use faulted or ruptured SG.
22	Check Core Exit TCs - LESS THAN 1200°F.	**IF** core exit TCs decreasing, **THEN** return to Step 20. OBSERVE NOTE PRIOR TO STEP 20. **IF** core exit TCs increasing **AND** RCPs running in all available RCS cooling loops, **THEN** go to SACRG-1, SEVERE ACCIDENT CONTROL ROOM GUIDELINE INITIAL RESPONSE, Step 1.

Examination Outline Cross-Reference	Level	RO	SRO
Rev. Date: 1/7/2015	Tier #	1	n/a
Change: 3	Group #	2	n/a
	K/A #	W/E/15 2.4.6	n/a
Level of Difficulty: 3	Importance Rating	3.7	n/a

Containment Flooding: Knowledge of EOP mitigation strategies.

Question 63

Unit 1 plant conditions:

- A RCP has a catastrophic failure resulting in a LOCA with multiple pieces of equipment damaged
- Containment spray pumps do not operate
- Containment sump level is increasing
- Containment parameters
  - Containment pressure = 16 psig
  - Containment sump level = 819 ft
- Evaluation of Critical Safety Function Status Tree entry conditions is in progress

Based on the above conditions, which ONE of the following is correct?

A. GO TO FRZ-0.1A RESPONSE TO HIGH CONTAINMENT PRESSURE, transfer out of FRZ-0.1A will not occur until containment pressure is below the entry level pressure.

B. GO TO FRZ-0.2A RESPONSE TO CONTAINMENT FLOODING, transfer out of FRZ-0.2A will not occur until containment level is below the entry level condition.

C. GO TO FRZ-0.1A RESPONSE TO HIGH CONTAINMENT PRESSURE, once actions are taken to reduce containment pressure, return to the procedure and step in effect, even if pressure is still above the entry condition.

D. GO TO FRZ-0.2A RESPONSE TO CONTAINMENT FLOODING, once actions are taken to reduce containment level, return to the procedure and step in effect, even if level is still above the entry condition.

Answer: D

This question matches the KA by requiring knowledge of the EOP mitigation strategies when the containment is being challenged.

Explanation / Plausibility:

A. Incorrect because you do not meet the entry conditions on containment pressure. It is plausible because you are above the containment spray initiation point and it doesn't work so pressure is a serious concern.

B. Incorrect because when systems that have the potential to fill the containment to that level are isolated, you are directed to have plant staff evaluate methods to remove the water and return to the procedure and step in effect. It is plausible because you will still have the same entry conditions.

C. Incorrect (see A).

D. Correct. You meet entry conditions for containment flood. Once actions are performed, you are directed to return to the procedure and step in effect.

Technical Reference: (Attach if not previously provided including revision number) _____

Proposed references to be provided to applicants during examination: _____

Learning Objective: DISCUSS the symptoms, or Entry Conditions for FRZ-0.2 A/B (LO21.ERG.FZ2.OBO3)

Question Source:	Bank #	
	Modified Bank#	
	New	X
Question History:	Last NRC Exam	
Question Cognitive Level	Memory or Fundamental Knowledge	X
	Comprehension or Analysis	
10 CFR Part 55 Content:	55.41	
	55.43	n/a

CONTAINMENT

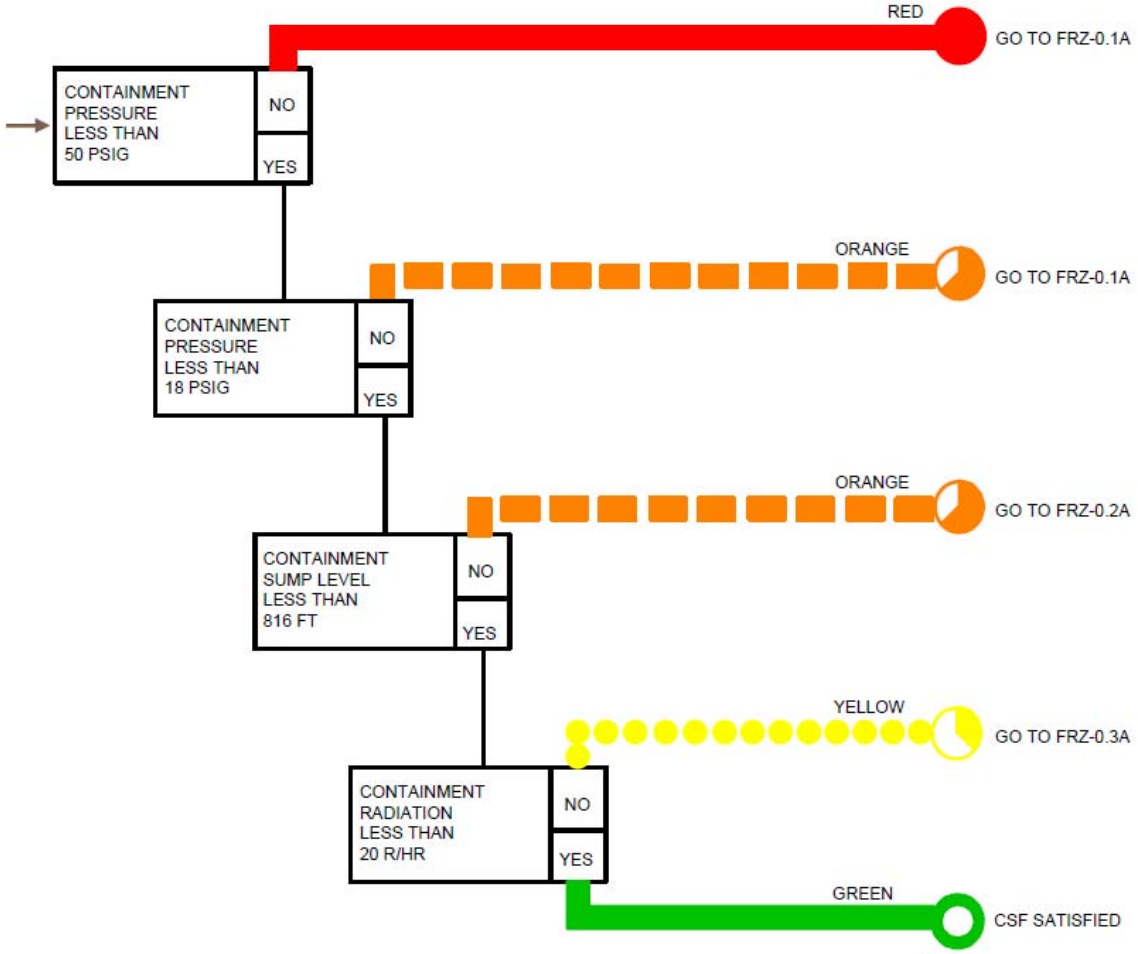

LESSON PLAN

NOTES	LESSON OUTLINE
	II. PRESENTATION
Objective 1	**A. FRZ-0.2A/B, Response to Containment Flooding**
	1. Overview
	a. Provides procedural guidance when the containment level is greater than flood level.
	b. FRZ-0.2A/B is applicable in Mode 1, 2, 3, or 4 operation.
	c. FRZ-0.2A/B is entered only from the
	d. CONTAINMENT status tree on an ORANGE Status Tree priority when containment sump level is high (greater than 816 foot elevation).
	e. Following completion of FRZ-0.2A/B, the operator returns to the procedure and step in effect.
	f. Design Basis containment flood level is considered to be a level greater than 816 foot elevation
	g. Critical systems/components necessary to ensure safe plant shutdown and provide feedback on plant conditions are located above this level.
	h. Thus, when this level is exceeded, it constitutes an challenge to the containment CSF, ORANGE priority.
	i. The containment sump is designed to collect water injected into containment or spilled from RCS following an accident.
	j. Potential exists for flooding of critical systems and components needed for plant recovery.
OF2 – Controlling plant evolutions precisely	2. Major Actions of FRZ-0.2A/B
OF3 – Establish a bias for a conservative approach to plant operations	a. Try to identify unexpected source of water and isolate it, if possible.
	b. Notify Plant Engineering/Technical Staff of sump level and activity level.

STEP	ACTION/EXPECTED RESPONSE	RESPONSE NOT OBTAINED
1	Check The Following Systems For Indication Of Possible Source Of Water To The Containment Sump (i.e., Pressure, Surge Tank Level, Flow, etc.): • RMUW • Demineralized water • CCW • Chemical and Volume Control System • Main Feedwater • AFW • Ventilation Chilled Water • Fire protection water	

STEP	ACTION/EXPECTED RESPONSE	RESPONSE NOT OBTAINED
2	Isolate Leakage Source To Containment: • Close CNTMT DEMIN WTR ISOL VLVS 1-HS-5366 and 1-HS-5365. • Close CNTMT FIRE PROT ISOL VLVS 1-HS-4075C and 1-HS-4075B. • Close Ventilation Chilled water valves as necessary. • Close CCW valves as necessary. • Close RMUW TO PRT/CNTMT SPLY ISOL VLV, 1/1-8047. • Close CVCS isolation valves as necessary. • Close FW isolation and bypass valves. • Close AFW isolation valves unless necessary for RCS cooldown.	
3	Notify Chemistry To Sample Containment Sump Activity.	
4	Notify Plant Staff Of Sump Level And Activity To Obtain Recommended Action.	
5	Return To Procedure And Step In Effect.	

-END-

Examination Outline Cross-Reference	Level	RO	SRO
Rev. Date: 1/18/2015	Tier #	1	n/a
Change: 4	Group #	2	n/a
	K/A #	W/E03 EA1.3	n/a
Level of Difficulty:3	Importance Rating	3.7	n/a

LOCA Cooldown-Depressurization: Ability to operate and / or monitor the following as they apply to the (LOCA Cooldown and Depressurization): Desired operating results during abnormal and emergency situations.

Question 64

Unit 1 plant conditions:

- A SBLOCA has occurred
- RCS pressure = 1000 psig
- EOS-1.2A, POST LOCA COOLDOWN AND DEPRESSURIZATION has been initiated
- SG levels = 45%
- Containment pressure = 4.3 psig

Based on the above plant conditions, complete the following statements regarding how EOS-1.2 is performed:

1. SG levels ____(1)____ adequate to initiate an RCS cooldown.

2. When initiating RCS depressurization without RCPs available, ____(2)____ will be used first.

A. (1) are
(2) auxiliary spray

B. (1) are
(2) PRZR PORV

C. (1) are NOT
(2) auxiliary spray

D. (1) are NOT
(2) PRZR PORV

Answer: B

This question matches the KA by requiring knowledge of how a LOCA cooldown and depressurization are performed.

Explanation / Plausibility:

A. 1st part is correct. SG levels are to be maintained > 43% NR. 2nd part is incorrect because EOS-1.2 directs the use of 1 Przr PORV. If that is unavailable, then use auxiliary spray. It is plausible because it is used if the PORV is not available.

B. 1st part is correct. 2nd part is correct.

C. 1st part is incorrect because ACC conditions do not exist (5 psig). It is plausible because it ACC conditions were present, it would be correct. 2nd part is incorrect but plausible (see A).

D. 1st part is incorrect but plausible (see A). 2nd part is correct.

Technical Reference: (Attach if not previously provided including revision number)	EOS-1.2A POST LOCA COOLDOWN AND DEPRESSURIZATION CPSES ERG Setpoint Summary

Proposed references to be provided to applicants during examination: _____

Learning Objective: Given a Step, NOTE or CAUTION from EOS-1.2, **STATE** the actions to be taken or reason for the Step, NOTE or CAUTION. (LO21.ERG.E12.OB04)

Question Source:	Bank #		
	Modified Bank#		
	New	X	
Question History:	Last NRC Exam		
Question Cognitive Level	Memory or Fundamental Knowledge		
	Comprehension or Analysis		X
10 CFR Part 55 Content:	55.41	41.7	
	55.43	n/a	

STEP	ACTION/EXPECTED RESPONSE	RESPONSE NOT OBTAINED
*10	Check Intact SG Levels:	
	a. Narrow range level - GREATER THAN 43% (50% FOR ADVERSE CONTAINMENT)	a. Maintain total AFW flow greater than 460 gpm until narrow range level greater than 43% (50% FOR ADVERSE CONTAINMENT) in at least one intact SG.
	b. Control AFW flow to maintain narrow range level between 43% (50% FOR ADVERSE CONTAINMENT) and 60%	b. **IF** narrow range level in any SG continues to increase in an uncontrolled manner, **THEN** stop RCS cooldown and go to EOP-3.0A, STEAM GENERATOR TUBE RUPTURE, Step 1.

NOTE: Shutdown margin should be monitored during RCS cooldown.

NOTE: After the low steamline pressure SI signal is blocked, main steamline isolation will occur if the high steam pressure rate setpoint is exceeded.

*11	Initiate RCS Cooldown To Cold Shutdown:	
	a. Maintain cooldown rate in RCS cold legs - LESS THAN 100°F/HR	
	b. **WHEN** PRZR pressure decreases to less than 1960 psig, **THEN** BLOCK low steamline pressure SI signal.	
	c. Dump steam to condenser from intact SG(s).	c. Dump steam using intact SG(s) atmospheric(s).
12	Check RCS Subcooling - GREATER THAN 25°F (55°F FOR ADVERSE CONTAINMENT)	Go to Step 25.

STEP	ACTION/EXPECTED RESPONSE	RESPONSE NOT OBTAINED
13	Check If ECCS Is In Service: • CCP injection line - NOT ISOLATED -OR- • SI pumps - ANY RUNNING -OR- • RHR pumps - ANY RUNNING IN INJECTION MODE	Go to Step 21.

STEP	ACTION/EXPECTED RESPONSE	RESPONSE NOT OBTAINED
	NOTE: The upper head region may void during RCS depressurization if RCPs are not running. This will result in a rapidly increasing PRZR level.	
*14	Depressurize RCS To Refill PRZR:	
	a. Use normal PRZR spray.	a. Use one PRZR PORV. **IF** no PORV available, **THEN** perform the following to use auxiliary spray: 1) Verify at least one SI pump running. **IF** no SI pump running, **THEN** go to Step 15. OBSERVE CAUTION **AND** NOTE PRIOR TO STEP 15. 2) Ensure at least one CCP running. **IF** CCW to RCP Thermal Barrier flow not available, **THEN** isolate RCP seal injection prior to CCP start. 3) Align CCP Miniflow Valves: A) Open CCP Miniflow Valves 1/1-8110 and 1/1-8111. B) Close CCP Alternate Miniflow Isolation Valves 1/1-8511A and 1/1-8511B. 4) Close the CCP Injection Line Isolation Valves: • 1/1-8801A • 1/1-8801B

Setpoint No.	Description	Setpoint Value	Rev
T.03	Containment design pressure.	50 psig	2
T.04	Containment pressure for resetting spray signal, including allowances for normal channel accuracy.	3.0 psig	2
T.05	Containment hydrogen concentration corresponding to the limit of operability of the hydrogen recombiners, not to exceed 6%. (CPNPP utilizes this setpoint for identification of hydrogen gas concentration in Containment atmosphere that represents a combustible mixture. CPNPP design does not include Hydrogen Recombiners.)	4.0%	3
T.06	Containment water level just below design flow level, minus allowances for normal channel accuracy.	816 ft	2
T.07	Radiation level alarm setpoint for Post Accident Containment Radiation Monitor.	20 R/Hr	2
T.08	Containment sump level necessary for containment spray recirculation including normal accuracy.	810 ft	3
T.09	Number of emergency fan coolers required. Refer to Background Document for guideline ECA-1.1.	N/A	0
T.10	Containment free air volume in cubic feet.	2,985,000ft^3	2
T.C01	Containment pressure criteria for transition between normal and adverse containment values.	5 psig	2
T.C02	Containment radiation dose criteria for transition between normal and adverse containment values.	10^5 R/Hr	2
T.C03	Containment integrated radiation dose criteria for transition between normal and adverse containment values.	10^6 Rads	2
T.C04	Containment pressure setpoint for actuation of SI.	3.0 psig	2
T.C05	Containment pressure setpoint for isolation of MSIVs.	6.0 psig	2
T.C06	Maximum allowed Technical Specification Containment pressure to determine normal containment conditions.	1.3 psig	2
T.C07	Containment hydrogen concentration for notification of Plant Staff.	0.5%	3
T.C09	Limiting containment hydrogen concentration req'd to provide adequate margin to potential explosive mixture with oxygen during reactor vessel head vent.	3%	3
T.C10	Reactor head vent hydrogen flow rate as a function of RCS pressure.	Curve	2
T.C11	Sump level for minimum RHR pump NPSH during recirc plus normal channel accuracy.	810 ft	1

Examination Outline Cross-Reference	Level	RO	SRO
Rev. Date: 1/18/2015	Tier #	1	n/a
Change: 4	Group #	2	n/a
	K/A #	W/E10 EK1.2	n/a
Level of Difficulty: 3	Importance Rating	3.4	n/a

Natural Circulation with Steam Void in Vessel with/without RVLIS: Knowledge of the operational implications of the following concepts as they apply to the (Natural Circulation with Steam Void in Vessel with/without RVLIS): Normal, abnormal and emergency operating procedures associated with (Natural Circulation with Steam Void in Vessel with/without RVLIS).

Question 65

Unit 1 plant conditions:

- A reactor trip has occurred
- RCPs have been secured
- EOS-0.3A NATURAL CIRCULATION COOLDOWN WITH STEAM VOID IN VESSEL (WITH RVLIS) has been initiated
- RCS depressurization has been initiated
- Letdown is in service

When evaluating plant conditions during the depressurization, complete the following statements:

1. ____(1)____ will be used to depressurize the RCS.

2. The cooldown rate during in EOS-0.3A is limited to ____(2)____.

A. (1) auxiliary spray
(2) 50°F/hr

B. (1) auxiliary spray
(2) 100°F/hr

C. (1) PRZR PORV
(2) 50°F/hr

D. (1) PRZR PORV
(2) 100°F/hr

Answer: B

This question matches the KA by requiring knowledge of natural circulation cooldown with a void present.

Explanation / Plausibility:

A. 1st part is correct. With letdown in service, auxiliary spray will be used. 2nd part is incorrect because the cooldown rate is limited to 100°F /hr. It is plausible because if you did not have RVLIS (EOS-04.A) it would be correct.

B. 1st part is correct. 2nd part is correct.

C. 1st part is incorrect because auxiliary spray will be used. It is plausible because if letdown were not in service, it would be correct. 2nd part is incorrect but plausible (see A).

D. 1st part is incorrect but plausible (see A). 2nd part is incorrect but plausible (see B).

Technical Reference: (Attach if not previously provided including revision number)	EOS-0.3A NATURAL CIRCULATION COOLDOWN WITH STEAM VOID IN VESSEL (WITH RVLIS)

Proposed references to be provided to applicants during examination: _____

Learning Objective:	**DISCUSS** the ERG background for performing Natural Circulation Cooldown with and without RVLIS indications**.** (LO21.ERG.E02.OB03)

Question Source:	Bank #		
	Modified Bank#		
	New	X	
Question History:	Last NRC Exam		
Question Cognitive Level	Memory or Fundamental Knowledge		
	Comprehension or Analysis		X
10 CFR Part 55 Content:	55.41	41.8, 41.10	
	55.43	n/a	

STEP	ACTION/EXPECTED RESPONSE	RESPONSE NOT OBTAINED

NOTE: If at any time it is determined that a natural circulation cooldown and depressurization must be performed at a rate that may form a steam void in the vessel, EOS-0.3A, NATURAL CIRCULATION COOLDOWN WITH STEAM VOID IN VESSEL (WITH RVLIS), or EOS-0.4A, NATURAL CIRCULATION COOLDOWN WITH STEAM VOID IN VESSEL (WITHOUT RVLIS) should be used.

STEP	ACTION/EXPECTED RESPONSE	RESPONSE NOT OBTAINED

CAUTION: If SI actuation occurs during this procedure, EOP-0.0A, REACTOR TRIP OR SAFETY INJECTION, shall be performed.

CAUTION: If RCP seal cooling had previously been lost, the affected RCP(s) should not be started prior to a status evaluation.

CAUTION: SI actuation circuits will automatically unblock if PRZR pressure increases to greater than 1960 psig.

NOTE: RCPs should be run in order of priority to provide normal PRZR spray (RCP 4, 1 then 2 or 3).

NOTE: If conditions can be established for starting an RCP during this procedure, Step 1 should be repeated.

* 1	Restart An RCP:	
	a. Establish conditions for starting an RCP per Attachment 2.	a. Go to Step 2. OBSERVE NOTE PRIOR TO STEP 2.

-CONT 1-

STEP	ACTION/EXPECTED RESPONSE	RESPONSE NOT OBTAINED
	b. Check RVLIS indication - 49 IN ABOVE FLANGE LIGHT LIT	b. Perform the following: 1) Increase PRZR level to 90% using charging and letdown. 2) Establish subcooling greater than 60°F using steam dumps or SG atmospherics. 3) Use PRZR heaters, as necessary to saturate the pressurizer water.
	c. Start one RCP per Attachment 2.	c. Go to Step 2. OBSERVE NOTE PRIOR TO STEP 2.
	d. Go to IPO-007A, MAINTAINING HOT STANDBY.	

NOTE: Saturated conditions in the PRZR should be established before trying to decrease PRZR level.

2	Establish PRZR Level To Accommodate Void Growth:	
	a. Check PRZR level - BETWEEN 30% AND 40%	a. Control charging and letdown as necessary.
	b. Place PRZR level control in manual.	

STEP	ACTION/EXPECTED RESPONSE	RESPONSE NOT OBTAINED
	CAUTION: The PRZR PORVs are automatically placed in the Low Temperature Overpressure Protection mode when RCS temperature is reduced below 350°F.	
* 3	Continue RCS Cooldown And Initiate Depressurization:	
	a. Maintain cooldown rate in RCS cold legs - LESS THAN 100°F/HR	
	b. Maintain RCS subcooling - GREATER THAN 45°F	
	c. Maintain RCS temperature and pressure - WITHIN LIMITS OF PTLR FIGURE 2-2 (ATTACHMENT 3)	
	d. Check letdown - IN SERVICE	d. Depressurize RCS using one PRZR PORV. Go to Step 4.
	e. Depressurize RCS using auxiliary spray.	

STEP	ACTION/EXPECTED RESPONSE	RESPONSE NOT OBTAINED
	d. Use PRZR heaters as necessary to saturate the pressurizer water.	
	e. Start one RCP per Attachment 3.	e. Go to Step 2. OBSERVE NOTE PRIOR TO STEP 2.
	f. Go to IPO-007A, MAINTAINING HOT STANDBY.	

NOTE: Saturated conditions in the PRZR should be established before trying to decrease PRZR level.

2	Establish PRZR Level To Accommodate Void Growth:	
	a. Check PRZR level - BETWEEN 30% AND 40%	a. Control charging and letdown as necessary.
	b. Place PRZR level controls in manual.	
3	Decrease RCS Hot Leg Temperatures To 500°F:	
	a. Maintain cooldown rate in RCS cold legs - LESS THAN 50°F/HR	
	b. Maintain RCS pressure - LESS THAN 1910 PSIG	
	c. Maintain RCS temperature and pressure - WITHIN LIMITS OF PTLR FIGURE 2-2 (ATTACHMENT 2)	
	d. Maintain stable PRZR level using charging and letdown.	
	e. Check RCS hot leg temperatures - LESS THAN 500°F	e. Return to Step 3a.
	f. Stop RCS cooldown.	

Examination Outline Cross-Reference	Level	RO	SRO
Rev. Date: 1/7/2015	Tier #	3	n/a
Change: 1	Group #		n/a
	K/A #	G 2.1.18	n/a
Level of Difficulty: 3	Importance Rating	3.6	n/a

Ability to make accurate, clear, and concise logs, records, status boards, and reports.

Question 66

Which ONE of the following is correct in accordance with Operations Guideline 3, Attachment 4, OPERATIONS DEPARTMENT ALARM RESONSE EXPECTATIONS for addressing expected alarms?

A. During a transient condition the operator responding to the annunciator communicates to the US that the alarm is expected and if the US approves, subsequent alarms associated with that annunciator do not require communication. The ALM is required to be referenced for the initial alarm.

B. During normal equipment operation the operator responding to the annunciator communicates to the US that the alarm is expected and if the US approves, subsequent alarms associated with that annunciator do not require communication. The ALM is not required to be referenced since it was expected.

C. If the alarm is valid and coming in due to a known condition repeatedly during the shift, the US can declare the alarm expected but it will still require the operator responding to the annunciator to announce the alarm each time and to respond to the ALM for the first time only.

D. If the alarm is valid and coming in due to a known condition repeatedly during the shift, the US can declare the alarm expected at which point the operator responding to the annunciator is not required to communicate the alarm to the US or respond to the ALM.

Answer: B

This question matches the KA by requiring knowledge of how the operator communicates expected alarms in the control room.

Explanation / Plausibility:

A. Incorrect because the ALM is not required to be addressed for an expected alarm. It is plausible because being familiar with the alarm procedure, even for an expected alarm is conservative.

B. This is correct.

C. Incorrect because this ALM does not have to be referenced per OPGD-3AT4. It is plausible because it is an actual alarm condition and again, it would be conservative to address the alarm at least once.

D. Incorrect because the alarm must be communicated each time. It is plausible because for a standard “expected alarm”, it is correct.

Technical Reference: (Attach if not previously provided including revision number)	OPGD-3AT4, OPERATIONS DEPARTMENT ALARM RESONSE EXPECTATIONS

Proposed references to be provided to applicants during examination: _____

Learning Objective:	**STATE** requirements for Conduct of Operations in accordance with ODA-102, ODA-407 and Operations Guideline 3. (LO21.ADM.XA3.OB01)

Question Source:	Bank #	
	Modified Bank#	
	New	X
Question History:	Last NRC Exam	
Question Cognitive Level	Memory or Fundamental Knowledge	X
	Comprehension or Analysis	
10 CFR Part 55 Content:	55.41	41.10
	55.43	n/a

3.0 Alarm Response

3.1 Control Room Alarm Response

The standard communication model is for the operator to announce the annunciator, either verbatim or summary, followed by “expected” for expected alarms (not required for unexpected alarms). The Unit Supervisor repeats back and the operator completes the third leg. If the Unit Supervisor is unavailable, the annunciator should be communicated to another operator and the Unit Supervisor updated as soon as possible.

Annunciators are grouped into the following categories:

Expected

- Expected annunciators are those directly attributed to a known plant activity or condition.
- Expected annunciators should be communicated to the operating crew prior to alarming by the individual performing the field activity or coordinating the activity in the Control Room.
- An alarm received during the normal course of equipment operation that is under the control of an operator is considered to be expected. The ALM is not required to be referenced. Some examples are: starting or securing equipment and/ or systems, testing of components or equipment calibrations, or during alarm panel testing.
- Expected annunciators generated from non-operations activities (e.g. Maintenance) should be identified prior to the start of that activity.
- The operator responding to the expected annunciator(s) communicates to the Unit Supervisor that the alarm is “expected”. If the Unit supervisor approves, subsequent alarms associated with the expected annunciator(s) do not require communication.
- An alarm received due to a known problem can be considered expected at the Unit Supervisor’s discretion. For example, a known leak requires a sump to be pumped many times a shift, when level reaches the high alarm setpoint. The Unit Supervisor directs the operator to announce and take action to clear the alarm, but implementing the ALM is not required.

Unexpected [4447146]

- First occurrence on shift: communicate the alarm to the Unit Supervisor and implement the associated ALM.
- Subsequent occurrences same shift: Communicate the alarm to the Unit Supervisor for each occurrence and reference the ALM. Whether to reference or implement the ALM is at the discretion of the Unit Supervisor. If sufficient information is known, the

Unit Supervisor may decide the alarm is “expected” under the current situation.

For example, if a temperature alarm comes in during hot weather and it will continue to come in intermittently until weather cools, then no additional actions are possible after the initial investigation. Subsequent alarms may be considered “expected” for that shift.

Examination Outline Cross-Reference	Level	RO	SRO
Rev. Date:1/18/2015	Tier #	3	n/a
Change: 3	Group #		n/a
	K/A #	G 2.1.30	n/a
Level of Difficulty: 2	Importance Rating	4.4	n/a

Ability to locate and operate components, including local controls.

Question 67

Unit 1 plant conditions:

- The control room was evacuated due to a fire
- Control has been shifted to the Remote Shutdown Panel
- The decision has been made to proceed to a cold shutdown condition from the Remote Shutdown Panel

When conducting the plant cooldown, which ONE of the following is correct in accordance with ABN-803A RESONSE TO A FIRE IN THE CONTROL ROOM OR CABLE SPREADING ROOM?

A. The SG Atmospheric Relief Valves will be operated from the Remote Shutdown Panel to cool down the RCS with a limit of 25°F/hr in order to preclude void formation in the reactor vessel head.

B. The SG Atmospheric Relief Valves will be operated from the Remote Shutdown Panel to cool down the RCS with a limit of 100°F/hr in order to preclude void formation in the reactor vessel head.

C. The Steam Dumps will be operated from the Remote Shutdown Panel to cool down the RCS with a limit of 25°F/hr in order to minimize reactor vessel head closure stud stress.

D. The Steam Dumps will be operated from the Remote Shutdown Panel to cool down the RCS with a limit of 100°F/hr in order to minimize reactor vessel head closure stud stress.

Answer: A

This question matches the KA by requiring knowledge of local controls used to control an RCS cooldown.

Explanation / Plausibility:

A. Correct. Per ABN-803A, the atmospheric dump valve controls at the RSP are used to cooldown the RCS with a cooldown rate limit of 25°F/hr which is meant to keep subcooling at 65°F which precludes void formation in the vessel head.

B. Incorrect because the cooldown rate limit is 25°F/hr which is meant to keep subcooling at 65°F which precludes void formation in the vessel head. It is plausible because the cooldown rate limit for a natural circulation cooldown per EOS-0.3A Natural Circ cooldown with Steam Void in Vessel (with RVLIS) is 100°F/hr to minimize reactor vessel head closure stud stress.

C. Incorrect because the atmospheric dump valves are used. Plausible because during a natural circ cooldown per EOS-0.2A, the steam dump valves are preferred.

D. Incorrect but plausible (see B & C).

Technical Reference: (Attach if not previously provided including revision number)	ABN-803A RESONSE TO A FIRE IN THE CONTROL ROOM OR CABLE SPREADING ROOM

Proposed references to be provided to applicants during examination: _____

Learning Objective:	**ANALYZE** the response to a Fire in the Electrical or Control Building in accordance with ABN-803, Response To A Fire In The Control Room Or Cable Spreading Room. (LO21.ABN.803.OB01)

Question Source:	Bank #		
	Modified Bank#		
	New	X	
Question History:	Last NRC Exam		
Question Cognitive Level	Memory or Fundamental Knowledge		X
	Comprehension or Analysis		
10 CFR Part 55 Content:	55.41	41.7	
	55.43	n/a	

2.3 Operator Actions

NOTE: After Attachments 1 through 4 have been completed the unit should be in stable Hot Standby condition. The unit may be taken to Cold Shutdown as directed by Shift Manager using repairs and manual actions outlined in following steps. RCS pressure should be allowed to respond normally to ambient heat loss. Operator action should only be taken to maintain RCS pressure within the limits of Attachment 11.

The following limits should be maintained during cooldown:

- Subcooling Greater Than 65°F (to preclude void formation in the reactor vessel upper head region during cooldown)
- Actual PRZR LVL 50% - 90% (Attachment 14)
- Actual SG 1 & SG 2 LVL 84% - 92% (Attachment 15)
- Cooldown Rate Less Than 25°F/hr

Attachment 7, and Attachment 8 contain those instruments and controls which are protected from fire damage.

2.3 Operator Actions

NOTE: Tools needed to open the following junction boxes are located in the Safe Shutdown Repair Kit (located in the SFGD 790 N-S Hallway across from Chem Add Tank Area).

14. Obtain RSP manual control of SG Atmos Rlf valves as follows:

☐ a. Open appropriate junction boxes:

CONNECTOR	SWITCHES	LOCATION
• JB1S-1277	JB1S-1053Ø	SFGD 873, SG ATMOS ACCUM RM, South Wall off stairway to 880.
• JB1S-1276	JB1S-1051G	SFGD 852, SG High Pressure Chemical Feed Area

☐ b. Place disconnect switches in OFF.

☐ c. Route cable through conduit from junction box listed under CONNECTOR to junction box listed under SWITCHES.

☐ d. Connect prefabricated connector.

☐ e. Close junction boxes.

STEP	ACTION/EXPECTED RESPONSE	RESPONSE NOT OBTAINED
	CAUTION: The PRZR PORVs are automatically placed in the Low Temperature Overpressure Protection mode when RCS temperature is reduced below 350°F.	
* 3	Continue RCS Cooldown And Initiate Depressurization:	
	a. Maintain cooldown rate in RCS cold legs - LESS THAN 100°F/HR	
	b. Maintain RCS subcooling - GREATER THAN 45°F	
	c. Maintain RCS temperature and pressure - WITHIN LIMITS OF PTLR FIGURE 2-2 (ATTACHMENT 3)	
	d. Check letdown - IN SERVICE	d. Depressurize RCS using one PRZR PORV. Go to Step 4.
	e. Depressurize RCS using auxiliary spray.	

ATTACHMENT 4
PAGE 5 OF 13

BASES

CAUTION: When the PRZR PORVs are armed in the LTOP mode, the lift pressures of the relief valves are reduced to maintain required relationship between RCS temperature and pressure. TDM-301A, RCS TEMPERATURE & PRESSURE LIMITS provides the lift pressures for the associated RCS temperatures.

STEP 3: This procedure is intended to provide a faster cooldown/depressurization than that outlined in EOS-0.2A. For this reason a maximum cooldown rate of 100°F/hr is allowed, along with a minimal subcooling requirement (i.e., instrument errors plus 20°F to ensure subcooling in hot legs). At the same time, however, the primary system pressure and temperature should be maintained within the PTLR limits. Deviation from the required cooldown rate could lead to excessive heat removal rates during the RCS cooldown. Since the intent of this procedure is to perform a controlled RCS cooldown and stay within PTLR limits, the requirement to maintain RCS temperature and pressure within these limits is explicitly emphasized in this step. Though this is not a pressurized thermal shock concern, emphasis is needed on maintaining RCS temperature and pressure within certain limits.

The operator should be aware that a faster natural circulation cooldown/depressurization, which allows upper head void growth, poses an additional concern. A high temperature differential may exist between the vessel proper and the vessel head that could cause differential contraction between the vessel head and vessel body at the flange, thereby stressing the studs beyond the allowable code limits.

STEP	ACTION/EXPECTED RESPONSE	RESPONSE NOT OBTAINED
* 7	Initiate RCS Cooldown To Cold Shutdown:	
	a. Maintain cooldown rate in RCS cold legs - LESS THAN 50°F/HR	
	b. Initiate OPT-407, RCS TEMPERATURE AND PRESSURE VERIFICATION while continuing with this procedure.	
	c. Dump steam to condenser.	c. Dump steam using SG atmospherics.
	d. Maintain SG narrow range level - AT 67% (62% TO 72%)	d. Control AFW flow as necessary.
	e. RCS temperature and pressure - WITHIN LIMITS OF PTLR FIGURE 2-2 (ATTACHMENT 2)	
8	Check RCS Hot Leg Temperatures - LESS THAN 550°F	Return to Step 7.

Examination Outline Cross-Reference	Level	RO	SRO
Rev. Date: 1/7/2015	Tier #	3	n/a
Change: 2	Group #		n/a
	K/A #	G 2.1.31	n/a
Level of Difficulty: 3	Importance Rating	4.6	n/a

Ability to locate control room switches, controls, and indications, and to determine that they correctly reflect the desired plant lineup.

Question 68

Unit 1 plant conditions:

- Reactor startup is in progress per IPO-002A, PLANT STARTUP FROM HOT STANDBY
- Reactor power = 5×10^{-10} amps
- 1ALB-6D 1.1 SR HI VOLT FAIL is in alarm

Based on the above plant conditions, which ONE of the following is correct?

A. This alarm is expected for the current reactor power and is a result of placing both Source Range Trip / Reset Block switches on the Main Control Board to the BLOCK position.

B. This alarm is expected for the current reactor power and is a result of placing HIGH FLUX AT SHUTDOWN switches on the SOURCE RANGE DRAWER to the BLOCK position.

C. This alarm is not expected for the current plant conditions and the reactor should be tripped from the Main Control Board.

D. This alarm is not expected for the current plant conditions and per 1-ALB-6D, the fuses should be checked at the SOURCE RANGE DRAWER.

Answer: A

This question matches the KA by requiring knowledge of expected indications for a given set of conditions and manipulation of plant switches at different locations.

Explanation / Plausibility:

A. Correct. Per IPO-002A, SR RX TRIP BLK PEM P-6 is ON, the operator is directed to block the SR reactor trip signals on the main control boards. The procedure also states that there is only 1 / 2 decade between the setpoint for P-6 and the SR trip setpoint. Assuming that P-6 conditions are met at 10^{-10}amps half decade would be 3.16×10^{-10}amps. Therefore, by IPO-002A the SR would have to have been blocked before 5×10^{-10}amps was reached.

B. Incorrect because the trip signal will be blocked at the Main Control Board. Plausible because there is a block switch for the hi flux at shutdown trip located on the source range drawer.

C. Incorrect because this is an expected alarm. It is plausible because per TS 3.3.1 condition J for 2 SR flux channels inoperable, the required action is to Open Reactor Trip Breakers Immediately.

D. Incorrect because this is an expected alarm. It is plausible because 1-ALB-6D does have you check power fuses for the SR instrument.

Technical Reference: (Attach if not previously provided including revision number)	1ALB-6D 1.1 SR HI VOLT FAIL
	IPO-002A, PLANT STARTUP FROM HOT STANDBY
	TS 3.3.1

Proposed references to be provided to applicants during examination: _____

Learning Objective: **EXPLAIN** the normal, abnormal and emergency operation of the Excore Instrumentation system. (LO21.SYS.EC1.OB05)

Question Source:	Bank #		
	Modified Bank#		
	New	X	
Question History:	Last NRC Exam		
Question Cognitive Level	Memory or Fundamental Knowledge		
	Comprehension or Analysis		X
10 CFR Part 55 Content:	55.41	41.10	
	55.43	n/a	

NOTE: The Source Range and Intermediate Range overlap region should be passed through quickly with a steady startup rate of approximately 0.5 DPM. Expeditiously proceeding through this region should prevent inadvertent Source Range Reactor Trip caused by Intermediate Range perturbations around the P-6 setpoint.

5.2.20 Establish a startup rate of approximately 0.5 DPM. ____/____ Initials Date

NOTE: The minimum required overlap between the Source Range and Intermediate Range channels is ONE decade.

5.2.21 Verify the Intermediate Range channels begin to respond when the Source Range channels are between 10^3 cps and 10^4 cps. ____/____ Initials Date

CAUTION: There is only approximately ½ decade of Source Range counts between the P-6 interlock setpoint and the Source Range Reactor Trip setpoint.

5.2.22 WHEN 1-PCIP, 2.5, SR RX TRIP BLK PERM P-6 is ON, THEN perform the following:

A. Place both SR RX TRIP RESET/BLK switches in BLOCK:

- ☐ 1/1-N-33A, SR RX TRIP RESET/BLK
- ☐ 1/1-N-33B, SR RX TRIP RESET/BLK ____/____ Initials Date

B. Verify the following are ON:

- ☐ 1-PCIP, 1.1, SR TRN A RX TRIP BLK
- ☐ 1-PCIP, 2.1, SR TRN B RX TRIP BLK
- ☐ 1-ALB-6D, 1.1, SR HI VOLT FAIL
- ☐ 1-TSLB-9, 1.6, IR SR BLK PERM NC-35D
- ☐ 1-TSLB-9, 2.6, IR SR BLK PERM NC-36D ____/____ Initials Date

5.2.23 Level Reactor power at approximately 1×10^{-8} amps on the highest reading Intermediate Range channel by adjusting the control rods as necessary to establish a 0 DPM startup rate. ____/____ Initials Date

2.0 Source Range Instrumentation Malfunction

2.1 Symptoms

a. Annunciator Alarms

- SR FLUX HI (6C - 1.5)
- SR HI VOLT FAIL (6D - 1.1)
- SR SHTDN FLUX HI (6D - 2.1)
- SR FLUX DBLG (6D - 2.12)

b. Plant Indications

- Loss of the INSTRUMENT POWER ON or CONTROL POWER ON lights on nuclear instrumentation cabinet N-31 or N-32.
- LOSS OF DETECTOR VOLTAGE, LEVEL TRIP or HIGH FLUX AT SHUTDOWN lights (nuclear instrumentation cabinet N-31 or N-32) - LIT
- One source range channel indicating erratically or momentarily spiking high or low.
- Loss of audible count rate in the control room or containment.
- Startup rate meter indicating erratically.

2.2 Automatic Actions

a. IF the intermediate range channels indicate greater than 1×10^{-10} amps (P-6) and the source range trips have been blocked, THEN there will be no obvious control room indication of a source range channel failure.

b. IF the channel failure occurs while the reactor is shut down or during reactor startup, THEN plant response will depend upon the mode of failure.

- A failure HIGH should induce a reactor trip (10^5 cps).
- A failure HIGH should activate the containment evacuation alarm.
- A failure LOW would cause no plant response, but meter indications would reflect the decreased count rate, and possible loss of audible count rate.
- A failure in either direction would cause the channel to be inoperable. Below P-6, the channel must be repaired prior to any positive reactivity addition.

LOGIC:

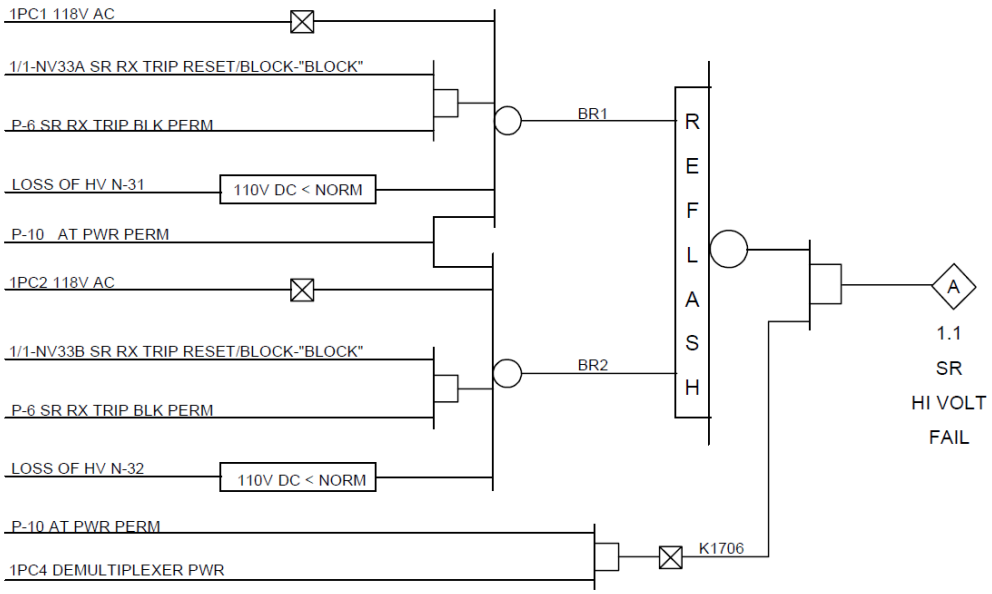
1PC1 118V AC
1/1-NV33A SR RX TRIP RESET/BLOCK-"BLOCK"
P-6 SR RX TRIP BLK PERM
LOSS OF HV N-31
110V DC < NORM
P-10 AT PWR PERM
1PC2 118V AC
1/1-NV33B SR RX TRIP RESET/BLOCK-"BLOCK"
P-6 SR RX TRIP BLK PERM
LOSS OF HV N-32
110V DC < NORM
P-10 AT PWR PERM
1PC4 DEMULTIPLEXER PWR
BR1
BR2
REFLASH
K1706
A
1.1
SR
HI VOLT
FAIL

ANNUNCIATOR NOM./NO.: **SR HI VOLT FAIL** 1.1

PROBABLE CAUSE:

Reactor startup
Blown instrument fuse
Intermediate range detector undercompensated during reactor shutdown
Power supply failure
Surveillance testing
Transferring to SSPS MODE 5 & 6

> NOTE: Alarm response should NOT be initiated if the alarm condition is caused by operator action during reactor startup.

AUTOMATIC ACTIONS: None

OPERATOR ACTIONS:

1. Monitor source range flux level to determine affected instrument:
   - 1-NI-31B, SR COUNT RATE CHAN I
   - 1-NI-32B, SR COUNT RATE CHAN II

2. Refer to ABN-701.

3. At the nuclear instrumentation panel, check for blown instrument power fuses.
   - SOURCE RANGE N-31
   - SOURCE RANGE N-32

4. Verify intermediate range current is $\geq 10^{-10}$ amps on at least one operable channel.
   - 1-NI-35B, IR CURRENT CHAN I
   - 1-NI-36B, IR CURRENT CHAN II

   A. If the OPERABLE lowest reading channel is NOT greater than the OPERABLE highest reading channel $\div 3.5$, refer to ABN-702.

5. Verify PCIP 2.5 SR RX TRIP PERM P-6 is off.

6. Verify P-6 is clear (windows dark) on 1-TSLB-9.
   - 1.6 IR SR BLK PERM NC35D
   - 2.6 IR SR BLK PERM NC36D

7. If required for plant operation, manually reenergize the source range detectors.
   - 1/1-N-33A, SR RX TRIP RESET/BLK
   - 1/1-N-33B, SR RX TRIP RESET/BLK

8. Refer to TS 3.3.1, Table 3.3.1-1 Function 5, and 3.9.3, and, TRM 13.3.32.

9. Correct the condition or initiate a work request per STA-606.

Source Range Drawer

Source range instrument drawers, N-31 and N-32 (**Figure 9**), contain the following indications and switches:

- The detector volts x 100 meter monitors the high voltage power supply output to the BF3 for the true voltage reading in the range of 0 to 2500 volts dc.
- The cps neutron level meter indicates the neutron level output of the BF3 counter for the source range channel. The meter indication is in counts per second between 10^0 and 10^6, calibrated logarithmically.
- The instrument power on lamp indicates, when lighted, 118 volt ac instrument power is applied to the drawer power supplies.
- The control power on lamp indicates, when lighted, 118 volt ac control power is applied to the drawer control signal circuit.
- The channel on test lamp indicates, when lighted, the drawer OPERATION SELECTOR switch is in a test position (not in NORMAL).
- The loss of detector volts lamp indicates, when lighted, that the high voltage supplied to the BF_3 proportional counter by the high voltage power supply is removed, or is low due to a fault in the system. The setpoint is 100 vdc below the normal setting.
- The level trip lamp lights when the neutron level detected by the proportional counter exceeds 10^5 cps. The trip condition removes AC voltage from the relay in the input cabinet of the Solid State Protection System.
- The level trip bypass lamp lights when the LEVEL TRIP switch is placed in the BYPASS position to perform test and calibration functions of the source range channel circuits.
- The high flux at shutdown lamp indicates, when lighted, that the detected neutron level exceeds the safe preset level during reactor shutdown. Trip voltage removes ac voltage from remote equipment to give an alarm. Setpoint is 5 times background reached (except during core reload, when setpoint is set per procedure.
- The 118 volt, 5 amp AC instrument power fuses protect the detector drawer assembly power supply circuits against primary power current overloads.
- The 118 volt, 5 amp, AC control power fuses protect the drawer assembly control signal circuit transformers against primary power current overloads.
- The level trip switch is a two position rotary switch, which enables test and calibration of the source range channel in conjunction with the OPERATION SELECTOR switch. In the NORMAL position, the switch is inactive. In the BYPASS position, the LEVEL TRIP BYPASS lamp lights, the OPERATION SELECTOR switch is enabled, and a 118 volt ac signal is provided to prevent a reactor trip condition during test operations.

MISCELLANEOUS CONTROL BOARD CONTROLS

The main control board contains a pairs of switches for resetting of source range instrumentation functions. The switches allow blocking and reset of the source range reactor trip.

Two source range block switches are used to block the SR high level reactor trip and de-energize the SR detector's high voltage when above P-6. Going to BLOCK on one switch will block the source range reactor trip on Train A of SSPS and de-energize N-31 (SR RX TRIP RESET/BLOCK u/1-N33A).The other switch will block the source range reactor trip on Train B of SSPS and de-energize N-32 (u/1-N33B). Both trains of SSPS must be blocked to prevent a trip.

The switches will spring return to neutral and care should be taken to make sure they don't over travel and go to the Reset position if let go in the Block position. The best policy is to manually return the switch to the neutral position. One plant had a reactor trip due to the switch returning to the Reset position when it was let go in the Block position.

Source Range Drawer

Source range instrument drawers, N-31 and N-32 (**Figure 9**), contain the following indications and switches:

- The detector volts x 100 meter monitors the high voltage power supply output to the BF3 for the true voltage reading in the range of 0 to 2500 volts dc.
- The cps neutron level meter indicates the neutron level output of the BF3 counter for the source range channel. The meter indication is in counts per second between 10^0 and 10^6, calibrated logarithmically.
- The instrument power on lamp indicates, when lighted, 118 volt ac instrument power is applied to the drawer power supplies.
- The control power on lamp indicates, when lighted, 118 volt ac control power is applied to the drawer control signal circuit.
- The channel on test lamp indicates, when lighted, the drawer OPERATION SELECTOR switch is in a test position (not in NORMAL).
- The loss of detector volts lamp indicates, when lighted, that the high voltage supplied to the BF_3 proportional counter by the high voltage power supply is removed, or is low due to a fault in the system. The setpoint is 100 vdc below the normal setting.
- The level trip lamp lights when the neutron level detected by the proportional counter exceeds 10^5 cps. The trip condition removes AC voltage from the relay in the input cabinet of the Solid State Protection System.
- The level trip bypass lamp lights when the LEVEL TRIP switch is placed in the BYPASS position to perform test and calibration functions of the source range channel circuits.
- The high flux at shutdown lamp indicates, when lighted, that the detected neutron level exceeds the safe preset level during reactor shutdown. Trip voltage removes ac voltage from remote equipment to give an alarm. Setpoint is 5 times background reached (except during core reload, when setpoint is set per procedure.

- The 118 volt, 5 amp AC instrument power fuses protect the detector drawer assembly power supply circuits against primary power current overloads.
- The 118 volt, 5 amp, AC control power fuses protect the drawer assembly control signal circuit transformers against primary power current overloads.
- The level trip switch is a two position rotary switch, which enables test and calibration of the source range channel in conjunction with the OPERATION SELECTOR switch. In the NORMAL position, the switch is inactive. In the BYPASS position, the LEVEL TRIP BYPASS lamp lights, the OPERATION SELECTOR switch is enabled, and a 118 volt ac signal is provided to prevent a reactor trip condition during test operations.
- The operation selector switch is an eight position rotary switch enabled by the LEVEL TRIP switch being placed in the BYPASS position which permits the generation of test signals for the test and calibration of the source range channel. In the NORMAL position the switch is inactive. In each of the six test positions the CHANNEL ON TEST indicator lights, a test signal oscillator is enabled and a remote relay is energized. In the LEVEL ADJ position, the CHANNEL ON TEST indicator lights and LEVEL ADJ potentiometer is switched into the test circuitry of the drawer assembly.
- The level adjust potentiometer provides an adjustable DC test signal for insertion directly into the level amplifier. This enables the adjustment of the trip level of the various bistable circuits within the drawer assembly. The control is effective only when the OPERATION SELECTOR switch is in the LEVEL ADJ position.
- The high flux at shutdown switch is a two position rotary switch. In the NORMAL position the switch is inactive and is the correct operating position during shutdown. During startup, as the neutron level increases, the BLOCK position is used; in this position a 118 volt ac manual block signal is provided to prevent the shutdown alarm from energizing. The 118 V AC Control Power is sent from the IR to Auxiliary Relay Rack #3, where it energizes a bypass relay. On loss of power to the SR, the fuse FU-3 in ARR #3 must be pulled to prevent the High Flux at Shutdown alarm in the containment.

SOURCE RANGE DRAWER

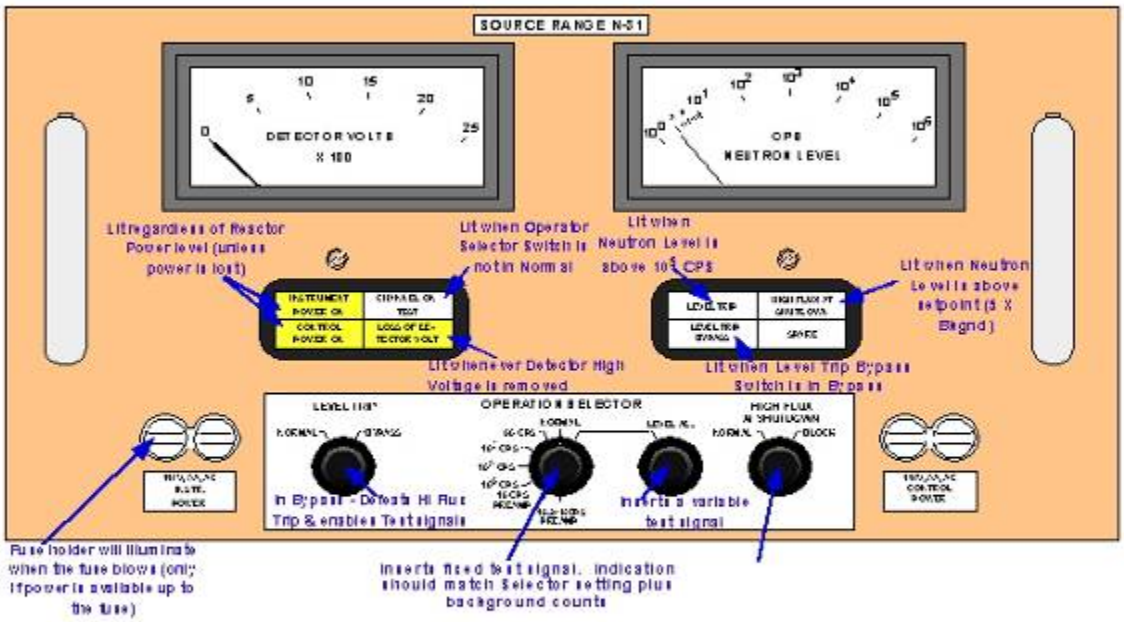

OP51.SYS.EC1.FG09

2-2-04

ACTIONS (continued)

CONDITION	REQUIRED ACTION	COMPLETION TIME
H. Not used.		
I. One Source Range Neutron Flux channel inoperable.	----------NOTE---------- Limited boron concentration changes associated with RCS inventory control or limited plant temperature changes are allowed. ---------- I.1 Suspend operations involving positive reactivity additions.	 Immediately
J. Two Source Range Neutron Flux channels inoperable.	J.1 Open reactor trip breakers (RTBs).	Immediately
K. One Source Range Neutron Flux channel inoperable.	K.1 Restore channel to OPERABLE status. <u>OR</u> K.2.1 Initiate action to fully insert all rods. <u>AND</u> K.2.2 Place the Rod Control System in a condition incapable of rod withdrawal.	48 hours 48 hours 49 hours
L. Not used.		

Examination Outline Cross-Reference	Level	RO	SRO
Rev. Date: 1/18/2015	Tier #	3	n/a
Change: 3	Group #		n/a
	K/A #	G2.2.1	n/a
Level of Difficulty: 3	Importance Rating	4.5	n/a

Ability to perform pre-startup procedures for the facility, including operating those controls associated with plant equipment that could affect reactivity.

Question 69

Unit 1 plant conditions:

- A reactor shutdown was performed towards the End-Of-Life (EOL) to make repairs
- A reactor startup is in progress 12 hours after the shutdown using IPO-002A, PLANT STARTUP FROM HOT STANDBY

Based on the above plant conditions, complete the following statements:

1. The approach to criticality is affected by the ____(1)____ axial offset.

2. ICRR data indicates that criticality will be achieved above the full out position on CBD, IPO-002A directs you to ____(2)____.

A. (1) negative
(2) continue the startup and attempt to attain criticality

B. (1) negative
(2) insert control banks to Control Bank Offset position and recalculate the ECC.

C. (1) positive
(2) continue the startup and attempt to attain criticality

D. (1) positive
(2) insert control banks to Control Bank Offset position and recalculate the ECC.

Answer: C

This question matches the KA by requiring knowledge of the procedure requirements for withdrawing control rods during a reactor startup.

Explanation / Plausibility:

A. 1st part is incorrect because per IPO-002A states that axial offset will be very positive after a shutdown at EOL. It is plausible because knowledge is required to determine if positive means more power production in the upper or lower half of the core and the impact of xenon at 12 hours following the shutdown. 2nd part is correct per limits and precautions of IPO-002A.

B. 1st part is incorrect but plausible (see A). 2nd part is incorrect because you are to continue to withdraw control rods. It is plausible because if you do not achieve criticality when CBD is full out, it would be correct.

C. 1st part is correct. 2nd part is correct.

D. 1st part is correct. 2nd part is incorrect but plausible (see B).

Technical Reference: (Attach if not previously provided including revision number)	IPO-002A PLANT STARTUP FROM HOT STANDBY

Proposed references to be provided to applicants during examination: _____

Learning Objective: **DISCUSS** IPO-002, "Plant Startup From Hot Standby", to include the following: Applicability; Precautions; Limitations; Notes; Instructions. (LO21.IPO.02B.OB01)

Question Source:	Bank #		
	Modified Bank#		
	New	X	
Question History:	Last NRC Exam		
Question Cognitive Level	Memory or Fundamental Knowledge		X
	Comprehension or Analysis		
10 CFR Part 55 Content:	55.41	41.5, 10	
	55.43	n/a	

[C] 5.2.10 Prior to the approach to criticality, a briefing should be held between the Shift Manager, STA, Control Room operators, and Core Performance Engineering in order to discuss the following:

- If Reactor is critical below the ROD INSERTION LIMIT then insert control banks to CBO and verify adequate Shutdown Margin or initiate boration to restore Shutdown Margin **within 15 minutes**. (TS 3.1.1)
- If the Reactor is critical outside the Expected Criticality Range (OPT-308-2) or ±500 PCM Evaluation Criteria (OPT-308-1), then contact Core Performance Engineering to provide guidance for continuing the startup.
- If the Reactor is NOT critical when Control Bank D reaches FOP, insert control banks to CBO and recalculate the ECC.
- If ICRR data indicates criticality will be achieved below the ROD INSERTION LIMIT within the next reactivity addition, insert all control banks to the Control Bank Offset position AND recalculate the ECC.
- If ICRR data indicates criticality will be achieved at or above the full out position on control bank D, continue the startup AND attempt to attain criticality.
- If using form OPT-308-2 for the startup, and ICRR data indicates criticality will be achieved outside the Expected Criticality Range but above Rod Insertion Limits, then contact Core Performance Engineering and continue the startup (Do not exceed 5% Reactor power until resolved).
- If using form OPT-308-1 for the startup, and ICRR data indicates criticality will be achieved outside the ±500 PCM Evaluation Criteria but within the ±1000 PCM Shutdown Criteria, then contact Core Performance Engineering and continue the startup (Do not exceed 5% Reactor power until resolved).
- If using form OPT-308-1 for the startup, and ICRR data indicates criticality will be achieved outside the ±1000 PCM Shutdown Criteria, insert all control banks to the Control Bank Offset position AND recalculate the ECC.
- Discuss with Core Performance Engineering the affects of the axial reactivity distribution on Control Bank worth, and how this may affect the approach to criticality. A shutdown from end-of-life core conditions will result in a very positive axial offset, which may be compounded by a large xenon buildup. Be aware of the affects on rod worth as CBC or CBD move through the top of the core, which can cause a rapid change in reactivity resulting in criticality prior to ICRR predictions.
- Rod withdrawal increments should be performed at approximately 50 steps. The Shift Manager may authorize withdrawal of rods at any other increment less than 50 steps as the Reactor approaches criticality.

Examination Outline Cross-Reference	Level	RO	SRO
Rev. Date:1/7/2015	Tier #	3	n/a
Change: 2	Group #		n/a
	K/A #	G2.2.40	n/a
Level of Difficulty: 2	Importance Rating	3.4	n/a

Ability to apply Technical Specifications for a system.

Question 70

Unit 2 plant conditions:

- Reactor power is 20%
- Containment pressure IR Channel I fails low
- Containment pressure IR Channels II, III and IV are operable

Based on the above plant conditions, which ONE of the following Conditions in Technical Specification LCO 3.3.2, ESFAS Instrumentation are applicable?

A. Condition D ONLY for Safety Injection initiation.

B. Condition D ONLY for Safety Injection initiation and Main Steam Line Isolation.

C. Conditions E ONLY for Containment Spray initiation and Phase B Containment Isolation.

D. Conditions D and E for Safety Injection actuation, Main Steam Line Isolation, Containment Spray initiation and Phase B Containment Isolation.

Answer: C

This question matches the KA by requiring knowledge how to apply Technical Specifications for given plant conditions.

Explanation / Plausibility:

A. Incorrect because Condition D does not apply because Channel I (2-PT-937) is not in the SI initiation circuitry.

B. Incorrect because Condition D does not apply because Channel I (2-PT-937) is not in the SI initiation or MSLI circuitry.

C. Correct because Condition E applies for Containment Spray initiation and Phase B Containment Isolation because 2-PT-937 is the fourth channel required for operability.

D. Incorrect because Condition D does not apply because Channel I (2-PT-937) is not in the SI initiation or MSLI circuitry even though Condition E applies for Containment Spray initiation and Phase B Containment Isolation.

Technical Reference: (Attach if not previously provided including revision number)	Tech Spec 3.3.2

Proposed references to be provided to applicants during examination: **Tech Spec 3.3.2**

Learning Objective: **EXPLAIN** the proper use of the LCO Applicability section in the Technical Specifications. (LO21.RLS.SL1.OB08)

Question Source:	Bank #	
	Modified Bank#	
	New	X
Question History:	Last NRC Exam	
Question Cognitive Level	Memory or Fundamental Knowledge	
	Comprehension or Analysis	X
10 CFR Part 55 Content:	55.41	41.10
	55.43	n/a

SAFEGUARDS ACTUATION LOGIC

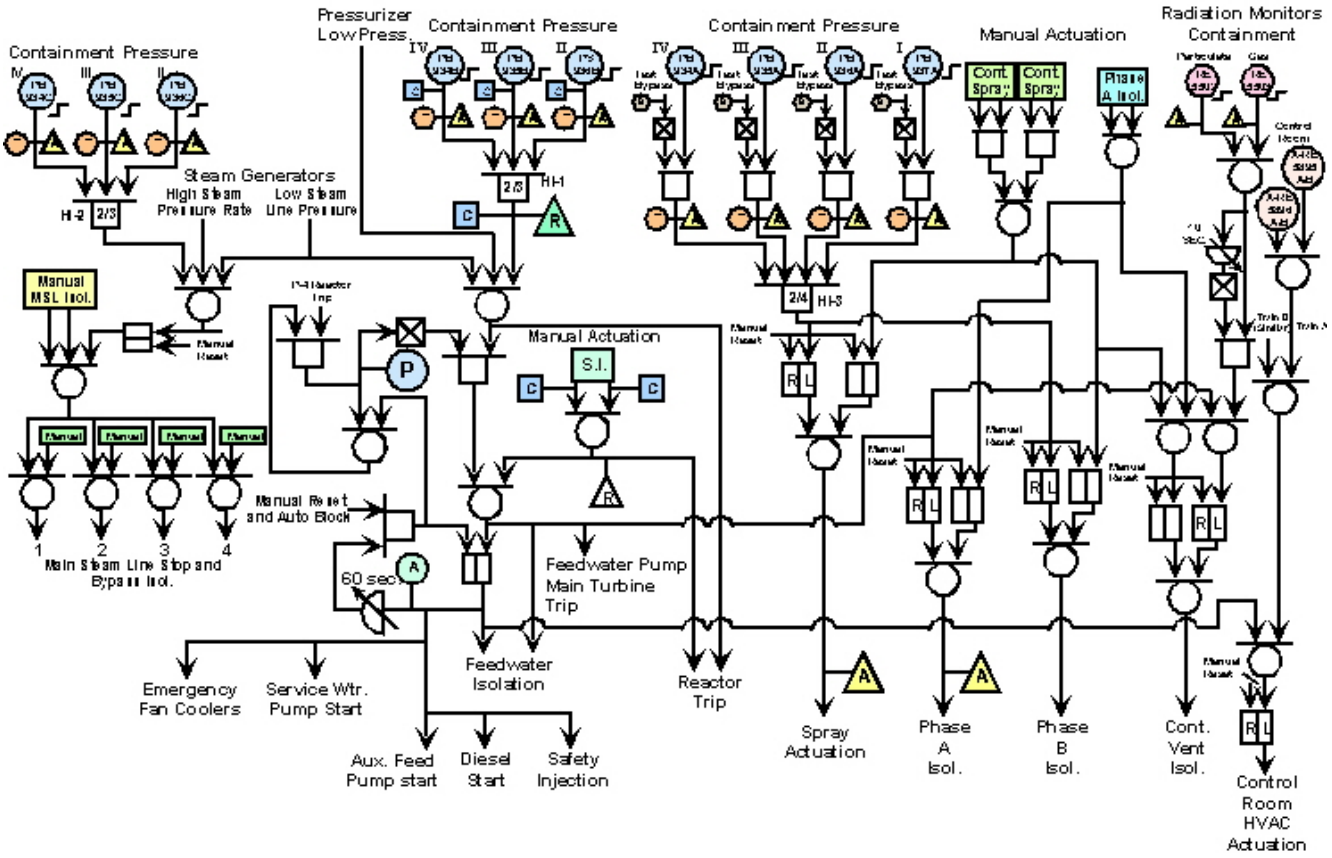

OP51.SYS.ES1.FG23

9-20-04

3.3 INSTRUMENTATION

3.3.2 Engineered Safety Feature Actuation System (ESFAS) Instrumentation

LCO 3.3.2 The ESFAS instrumentation for each Function in Table 3.3.2-1 shall be OPERABLE.

APPLICABILITY: According to Table 3.3.2-1

ACTIONS

----------NOTE----------
Separate Condition entry is allowed for each Function.

CONDITION	REQUIRED ACTION	COMPLETION TIME
A. One or more Functions with one or more required channels or trains inoperable.	A.1 Enter the Condition referenced in Table 3.3.2-1 for the channel(s) or train(s).	Immediately
B. One channel or train inoperable.	B.1 Restore channel or train to OPERABLE status.	48 hours
	OR	
	B.2.1 Be in MODE 3.	54 hours
	AND	
	B.2.2 Be in MODE 5.	84 hours

ACTIONS (continued)

CONDITION	REQUIRED ACTION	COMPLETION TIME
C. One train inoperable.	----------NOTE---------- One train may be bypassed for up to 4 hours for surveillance testing provided the other train is OPERABLE. ----------	
	C.1 Restore train to OPERABLE status.	24 hours
	OR	
	C.2.1 Be in MODE 3.	30 hours
	AND	
	C.2.2 Be in MODE 5.	60 hours
D. One channel inoperable.	----------NOTE---------- One channel may be bypassed for up to 12 hours for surveillance testing. ----------	
	D.1 Place channel in trip.	72 hours
	OR	
	D.2.1 Be in MODE 3.	78 hours
	AND	
	D.2.2 Be in MODE 4.	84 hours

ACTIONS (continued)

CONDITION	REQUIRED ACTION	COMPLETION TIME
E. One Containment Pressure channel inoperable.	----------NOTE---------- One channel may be bypassed for up to 12 hours for surveillance testing. ----------	
	E.1 Place channel in bypass.	72 hours
	OR	
	E.2.1 Be in MODE 3.	78 hours
	AND	
	E.2.2 Be in MODE 4.	84 hours
F. One channel or train inoperable.	F.1 Restore channel or train to OPERABLE status.	48 hours
	OR	
	F.2.1 Be in MODE 3.	54 hours
	AND	
	F.2.2 Be in MODE 4.	60 hours

ACTIONS (continued)

CONDITION	REQUIRED ACTION	COMPLETION TIME
G. One train inoperable.	----------NOTE---------- One train may be bypassed for up to 4 hours for surveillance testing provided the other train is OPERABLE. ---------- G.1 Restore train to OPERABLE status. OR G.2.1 Be in MODE 3. AND G.2.2 Be in MODE 4.	 24 hours 30 hours 36 hours
H. One train inoperable.	----------NOTE---------- One train may be bypassed for up to 4 hours for surveillance testing provided the other train is OPERABLE. ---------- H.1 Restore train to OPERABLE status. OR H.2 Be in MODE 3.	 24 hours 30 hours

ACTIONS (continued)

CONDITION	REQUIRED ACTION	COMPLETION TIME
I. One channel inoperable.	----------NOTE---------- One channel may be bypassed for up to 12 hours for surveillance testing. ---------- I.1 Place channel in trip. OR I.2 Be in MODE 3.	 72 hours 78 hours
J. One Main Feedwater Pump trip channel inoperable.	J.1 Place channel in trip. OR J.2 Be in MODE 3.	6 hours 12 hours
K. One channel inoperable.	----------NOTE---------- One channel may be bypassed for up to 12 hours for surveillance testing. ---------- K.1 Place channel in bypass. OR K.2.1 Be in MODE 3. AND K.2.2 Be in MODE 5.	 72 hours 78 hours 108 hours

ACTIONS (continued)

CONDITION	REQUIRED ACTION	COMPLETION TIME
L. One or more required channel(s) inoperable.	L.1 Verify interlock is in required state for existing unit condition. OR L.2.1 Be in MODE 3. AND L.2.2 Be in MODE 4.	1 hour 7 hours 13 hours

Table 3.3.2-1 (page 1 of 6)
Engineered Safety Feature Actuation System Instrumentation

FUNCTION	APPLICABLE MODES OR OTHER SPECIFIED CONDITIONS	REQUIRED CHANNELS	CONDITIONS	SURVEILLANCE REQUIREMENTS	ALLOWABLE VALUE[a]
1. Safety Injection					
a. Manual Initiation	1, 2, 3, 4	2	B	SR 3.3.2.8	NA
b. Automatic Actuation Logic and Actuation Relays	1, 2, 3, 4	2 trains	C	SR 3.3.2.2 SR 3.3.2.4 SR 3.3.2.6	NA
c. Containment Pressure -- High 1	1, 2, 3	3	D	SR 3.3.2.1 SR 3.3.2.5 SR 3.3.2.9 SR 3.3.2.10	≤ 3.8 psig
d. Pressurizer Pressure -- Low	1, 2, 3[b]	4	D	SR 3.3.2.1 SR 3.3.2.5 SR 3.3.2.9 SR 3.3.2.10	≥ 1803.6 psig
e. Steam Line Pressure Low	1, 2, 3[b]	3 per steam line	D	SR 3.3.2.1 SR 3.3.2.5 SR 3.3.2.9 SR 3.3.2.10	≥ 594.0 psig[c] (Unit 1) ≥ 578.4 psig[c] (Unit 2)
2. Containment Spray					
a. Manual Initiation	1, 2, 3, 4	2 per train, 2 trains	B	SR 3.3.2.8	NA
b. Automatic Actuation Logic and Actuation Relays	1, 2, 3, 4	2 trains	C	SR 3.3.2.2 SR 3.3.2.4 SR 3.3.2.6	NA
c. Containment Pressure High -- 3	1, 2, 3	4	E	SR 3.3.2.1 SR 3.3.2.5 SR 3.3.2.9 SR 3.3.2.10	≤ 18.8 psig

(a) The Allowable Value defines the limiting safety system except for functions 5b and 6c (the Nominal Trip Setpoint defines the limiting safety system setting for these Trip Functions). See the Bases for the Nominal Trip Setpoints.
(b) Above the P-11 (Pressurizer Pressure) interlock and below P-11, unless the Function is blocked.
(c) Time constants used in the lead/lag controller are $T_1 \geq 10$ seconds and $T_2 \leq 5$ seconds.

Table 3.3.2-1 (page 2 of 6)
Engineered Safety Feature Actuation System Instrumentation

FUNCTION	APPLICABLE MODES OR OTHER SPECIFIED CONDITIONS	REQUIRED CHANNELS	CONDITIONS	SURVEILLANCE REQUIREMENTS	ALLOWABLE VALUE[a]
3. Containment Isolation					
a. Phase A Isolation					
(1) Manual Initiation	1, 2, 3, 4	2	B	SR 3.3.2.8	NA
(2) Automatic Actuation Logic and Actuation Relays	1, 2, 3, 4	2 trains	C	SR 3.3.2.2 SR 3.3.2.4 SR 3.3.2.6	NA
(3) Safety Injection	Refer to Function 1 (Safety Injection) for all initiation functions and requirements.				
b. Phase B Isolation					
(1) Manual Initiation	1, 2, 3, 4	2 per train, 2 trains	B	SR 3.3.2.8	NA
(2) Automatic Actuation Logic and Actuation Relays	1, 2, 3, 4	2 trains	C	SR 3.3.2.2 SR 3.3.2.4 SR 3.3.2.6	NA
(3) Containment Pressure High – 3	1, 2, 3	4	E	SR 3.3.2.1 SR 3.3.2.5 SR 3.3.2.9	≤ 18.8 psig

(a) The Allowable Value defines the limiting safety system except for functions 5b and 6c (the Nominal Trip Setpoint defines the limiting safety system setting for these Trip Functions). See the Bases for the Nominal Trip Setpoints.

Table 3.3.2-1 (page 3 of 6)
Engineered Safety Feature Actuation System Instrumentation

FUNCTION	APPLICABLE MODES OR OTHER SPECIFIED CONDITIONS	REQUIRED CHANNELS	CONDITIONS	SURVEILLANCE REQUIREMENTS	ALLOWABLE VALUE[a]
4. Steam Line Isolation					
a. Manual Initiation	1, 2[i], 3[i]	2	F	SR 3.3.2.8	NA
b. Automatic Actuation Logic and Actuation Relays	1, 2[i], 3[i]	2 trains	G	SR 3.3.2.2 SR 3.3.2.4 SR 3.3.2.6	NA
c. Containment Pressure -- High 2	1, 2[i], 3[i]	3	D	SR 3.3.2.1 SR 3.3.2.5 SR 3.3.2.9 SR 3.3.2.10	≤ 6.8 psig
d. Steam Line Pressure					
(1) Low	1, 2[i], 3[b][i]	3 per steam line	D	SR 3.3.2.1 SR 3.3.2.5 SR 3.3.2.9 SR 3.3.2.10	≥ 594.0 psig[c] (Unit 1) ≥ 578.4 psig[c] (Unit 2)
(2) Negative Rate -- High	3[g][i]	3 per steam line	D	SR 3.3.2.1 SR 3.3.2.5 SR 3.3.2.9 SR 3.3.2.10	≤ 178.7 psi[h]

(a) The Allowable Value defines the limiting safety system except for functions 5b and 6c (the Nominal Trip Setpoint defines the limiting safety system setting for these Trip Functions). See the Bases for the Nominal Trip Setpoints.
(b) Above the P-11 (Pressurizer Pressure) interlock and below P-11, unless the Function is blocked.
(c) Time constants used in the lead/lag controller are $T_1 \geq 10$ seconds and $T_2 \leq 5$ seconds.
(g) Below the P-11 (Pressurizer Pressure) interlock; however, may be blocked below P-11 when safety injection on steam line pressure-low is not blocked.
(h) Time constant utilized in the rate/lag controller is ≥ 50 seconds.
(i) Except when all MSIVs and their associated upstream drip pot isolation valves are closed and deactivated.

Table 3.3.2-1 (page 4 of 6)
Engineered Safety Feature Actuation System Instrumentation

FUNCTION	APPLICABLE MODES OR OTHER SPECIFIED CONDITIONS	REQUIRED CHANNELS	CONDITIONS	SURVEILLANCE REQUIREMENTS	ALLOWABLE VALUE[a]
5. Turbine Trip and Feedwater Isolation					
a. Automatic Actuation Logic and Actuation Relays	1, 2[j]	2 trains	H	SR 3.3.2.2 SR 3.3.2.4 SR 3.3.2.6	NA
b. SG Water Level – High High (P-14)	1, 2[j]	3 per SG[p]	I	SR 3.3.2.1 SR 3.3.2.5 SR 3.3.2.9 SR 3.3.2.10	≤84.5% of narrow range span (Unit 1) [q][r] ≤82.0% of narrow range span (Unit 2) [q][r]
c. Safety Injection	Refer to Function 1 (Safety Injection) for all initiation functions and requirements.				

(a) The Allowable Value defines the limiting safety system except for functions 5b and 6c (the Nominal Trip Setpoint defines the limiting safety system setting for these Trip Functions). See the Bases for the Nominal Trip Setpoints.
(j) Except when all MFIVs and associated bypass valves are closed and de-activated or isolated by a closed manual valve.
(p) A channel selected for use as an input to the SG water level controller must be declared inoperable.
(q) If the as-found channel setpoint is conservative with respect to the Allowable Value but outside its predefined as-found acceptance criteria band, then the channel shall be evaluated to verify that it is functioning as required before returning the channel to service.
(r) The instrument channel setpoint shall be reset to a value that is within the as-left tolerance of the Nominal Trip Setpoint, or a value that is more conservative than the Trip Setpoint; otherwise, the channel shall be declared inoperable. The Nominal Trip Setpoint, the methodology used to determine the as-found tolerance and the methodology used to determine the as-left tolerance shall be specified in the Technical Specification Bases.

Table 3.3.2-1 (page 5 of 6)
Engineered Safety Feature Actuation System Instrumentation

FUNCTION	APPLICABLE MODES OR OTHER SPECIFIED CONDITIONS	REQUIRED CHANNELS	CONDITIONS	SURVEILLANCE REQUIREMENTS	ALLOWABLE VALUE[a]
6. Auxiliary Feedwater					
a. Automatic Actuation Logic and Actuation Relays (Solid State Protection System)	1, 2, 3	2 trains	G	SR 3.3.2.2 SR 3.3.2.4 SR 3.3.2.6	NA
b. Not Used.					
c. SG Water Level Low-Low	1, 2, 3	4 per SG	D	SR 3.3.2.1 SR 3.3.2.5 SR 3.3.2.9 SR 3.3.2.10	≥37.5% of narrow range span (Unit 1) [q][r] ≥34.9% of narrow range span (Unit 2) [q][r]
d. Safety Injection	Refer to Function 1 (Safety Injection) for all initiation functions and requirements.				
e. Loss of Offsite Power	1, 2, 3	1 per train	F	SR 3.3.2.7 SR 3.3.2.9 SR 3.3.2.10	NA
f. Not Used.					
g. Trip of all Main Feedwater Pumps	1, 2	2 per AFW pump	J	SR 3.3.2.8	NA
h. Not Used.					

(a) The Allowable Value defines the limiting safety system except for functions 5b and 6c (the Nominal Trip Setpoint defines the limiting safety system setting for these Trip Functions). See the Bases for the Nominal Trip Setpoints.

(q) If the as-found channel setpoint is conservative with respect to the Allowable Value but outside its predefined as-found acceptance criteria band, then the channel shall be evaluated to verify that it is functioning as required before returning the channel to service.

(r) The instrument channel setpoint shall be reset to a value that is within the as-left tolerance of the Nominal Trip Setpoint, or a value that is more conservative than the Trip Setpoint; otherwise, the channel shall be declared inoperable. The Nominal Trip Setpoint, the methodology used to determine the as-found tolerance and the methodology used to determine the as-left tolerance shall be specified in the Technical Specification Bases.

Table 3.3.2-1 (page 6 of 6)
Engineered Safety Feature Actuation System Instrumentation

FUNCTION	APPLICABLE MODES OR OTHER SPECIFIED CONDITIONS	REQUIRED CHANNELS	CONDITIONS	SURVEILLANCE REQUIREMENTS	ALLOWABLE VALUE[a]
7. Automatic Switchover to Containment Sump					
a. Automatic Actuation Logic and Actuation Relays	1, 2, 3, 4	2 trains	C	SR 3.3.2.2 SR 3.3.2.4 SR 3.3.2.6	NA
b. Refueling Water Storage Tank (RWST) Level - Low Low	1, 2, 3, 4	4	K	SR 3.3.2.1 SR 3.3.2.5 SR 3.3.2.9 SR 3.3.2.10	≥ 31.9% Instrument span
Coincident with Safety Injection	Refer to Function 1 (Safety Injection) for all initiation functions and requirements.				
8. ESFAS Interlocks					
a. Reactor Trip, P-4	1, 2, 3	1 per train, 2 trains	F	SR 3.3.2.11	NA
b. Pressurizer Pressure, P-11	1, 2, 3	3	L	SR 3.3.2.5 SR 3.3.2.9	≤ 1975.2 psig (Unit 1) ≤ 1976.4 psig (Unit 2)

(a) The Allowable Value defines the limiting safety system except for functions 5b and 6c (the Nominal Trip Setpoint defines the limiting safety system setting for these Trip Functions). See the Bases for the Nominal Trip Setpoints.

Examination Outline Cross-Reference	Level	RO	SRO
Rev. Date: 1/7/2015	Tier #	3	n/a
Change: 3	Group #		n/a
	K/A #	G2.3.5	n/a
Level of Difficulty: 2	Importance Rating	2.9	n/a

Ability to use radiation monitoring systems, such as fixed radiation monitors and alarms, portable survey instruments, personnel monitoring equipment, etc.

Question 71

You are exiting an RCA and approach the portable frisker which is reading 250 cpm background radiation. Based on this information, answer the following questions:

1. Are you allowed to perform your whole body frisk in an area with background radiation at this level?

2. When you do perform a whole body frisk (in this area or another) which scale should the frisker be set on when you start your frisk?

A. (1) YES
(2) The lowest and go up a position until the meter comes down on scale

B. (1) YES
(2) The highest and go down a position until the meter comes up on scale

C. (1) NO
(2) The lowest and go up a position until the meter comes down on scale

D. (1) NO
(2) The highest and go down a position until the meter comes up on scale

Answer: A

This question matches the KA by requiring the operator to have knowledge of the requirements for using personal radiation monitoring equipment.

Explanation / Plausibility:

A. 1st part is correct. Frisking should be done in areas with the background radiation < 300 cpm. 2nd part is correct. Frisking should be started on the X1 (lowest) scale.

B. 1st part is correct. 2nd part is incorrect because frisking should be started on the X1 scale. It is plausible because scales are set up such that they go up by a factor of 10 for every scale. Using that knowledge of how the scales work, it would figure that the applicant could think that X1 (0-10), X10 (0-100), X100 (0-1000) cpm. With this philosophy, it would reason that they would start on the highest scale so as not to "peg" the meter.

C. 1st part is incorrect because background count rates < 300 cpm are allowed. It is plausible because it is well over the preferred background level (100 cpm). 2nd part is correct.

D. 1st part is incorrect but plausible (see C). 2nd part is incorrect but plausible (see B).

Technical Reference: (Attach if not previously provided including revision number)	STA-653, CONTAMINATION CONTROL PROGRAM
Proposed references to be provided to applicants during examination:	
Learning Objective:	Radiation Control

Question Source:	Bank #		
	Modified Bank#		
	New	X	
Question History:	Last NRC Exam		
Question Cognitive Level	Memory or Fundamental Knowledge		X
	Comprehension or Analysis		
10 CFR Part 55 Content:	55.41	41.11, 12	
	55.43	n/a	

ATTACHMENT 3
PAGE 1 OF 2

GUIDELINES FOR PERSONAL MONITORING

Monitoring With a Frisker

NOTE:	Due to background radiation levels some friskers may indicate a background count rate greater than 300 cpm. These friskers may be used to perform a gross contamination check. In-plant low background frisker stations are provided as necessary.

1. Ensure meter is turned on and the scale switch is set at X1. Observe background level momentarily.

2. Without picking up the probe, frisk both sides of one hand. The probe should be about ½ inch away from the surface area being frisked.

3. Pick up probe and frisk remainder of body, scanning at a slow rate. Special attention shall be given to the face, soles of feet, hands, knees, posterior, and any surface left exposed while wearing protective clothing and dosimetry.

4. If an increase in the count rate is noted (visual or audible), return the probe to the spot and verify count rate. A significant and abrupt rise/drop in the count rate may indicate the presence of a DRP. Notify Radiation Protection.

5. If the frisker alarms or a continuous count rate of 100 cpm above background or greater is noted, remain at that point and notify, or have a co-worker notify, Radiation Protection for assistance. If contamination is not detected, proceed as usual.

6.6.7 Protective Clothing worn inside a Contaminated Area should be removed at the step off pad.
[CR-2011-005658]

6.6.8 Attachment 2 provides guidance for donning and removing PCs.

[C] 6.7 Personnel Monitoring
[00816]

6.7.1 Contamination monitoring requirements should be posted at the exit of Satellite/Alternate RCA's.
[CR-2011-005658]

6.7.2 Unless otherwise posted or authorized, all personnel shall monitor themselves after handling contaminated materials or exiting a contaminated area, at the nearest available frisker or PCM, and when exiting at the access control point.

6.7.3 The frisker is most commonly used for monitoring after exiting a contaminated area or after handling contaminated material. Frisking should be done with a background count rate of less than 300 counts per minute (cpm).

6.7.4 The Personnel Contamination Monitor (PCM) is most commonly used at the access control point, although it may be used to replace the frisker at locations such as the Reactor Building Personnel Air Lock.

6.7.5 Hand-held friskers should be available at or near normally established step-off pads when PCM's are not readily available.
[CR-2011-005658]

6.7.6 Hand held friskers should be available at or near each normally established RCA egress point for RP Technician use to respond to quantify contamination alarms.
[CR-2011-005658]

6.7.7 Portal Monitors will most commonly be used when exiting the protected area (e.g., PAP, AAP).

6.7.8 See Attachment 3 for guidelines on the use of friskers, PCMs and portal monitors.

6.7.9 When personnel contamination is found, Radiation Protection should evaluate and document the extent of the contamination. Radiation Protection should decontaminate the individual in accordance with RPI-402.

Examination Outline Cross-Reference	Level	RO	SRO
Rev. Date: 1/7/2015	Tier #	3	n/a
Change: 3	Group #		n/a
	K/A #	G2.3.7	n/a
Level of Difficulty: 2	Importance Rating	3.5	n/a

Ability to comply with radiation work permit requirements during normal or abnormal conditions.

Question 72

Which of the following would meet the minimum requirement for entry into a High Radiation Area (where dose rates exceed 1.0 REM/hour at 30 centimeters)?

Individual is entered on a valid Radiation Work Permit which will require...

A. ...a monitoring device which continuously integrates area radiation dose rate and alarms when the dose alarm setpoint is reached.

B. ...being continuously under the surveillance of a Radiation Protection Technician equipped with a self-reading dosimeter.

C. **...**being accompanied by a Radiation Protection Technician with a neutron radiation monitoring instrument.

D. **...**having a monitoring device which continuously displays area radiation dose rate.

Answer: A

The question matches the KA by requiring knowledge of RWPs (Radiation Work Control) requirements for escorted radiation workers.

Explanation / Plausibility:

A. Correct. Per Technical Specification Section 5.7, this is one of the requirements to enter a High Radiation Area greater than 1.0 REM per hour. This will be stated on the RWP.

B. Incorrect. Plausible because a Radiation Protection Technician can monitor an individual in a High Radiation Area, however, the RP Tech must have a monitoring device that continuously displays area dose rate and the individual must be wearing a self-reading dosimeter.

C. Incorrect. Plausible because a Radiation Protection Technician can monitor individuals in a High Radiation Area, however, additional requirements and monitoring instruments are needed.

D. Incorrect. Plausible because this is a requirement for a High Radiation Area that does NOT exceed 1.0 REM per hour; however, for greater than 1.0 REM per hour the device must include an alarm.

Technical Reference: (Attach if not previously provided including revision number)	STA-656, Radiation Work Control

Proposed references to be provided to applicants during examination: _____

Learning Objective: SYS.CY1.OB05

Question Source:	Bank #	ILOT8357	
	Modified Bank#		
	New		
Question History:	Last NRC Exam		
Question Cognitive Level	Memory or Fundamental Knowledge		X
	Comprehension or Analysis		
10 CFR Part 55 Content:	55.41	41.12	
	55.43	n/a	

4.10 Public Dose – The dose received by a member of the public from exposure to radiation and/or radioactive material released by a licensee or to any other source of radiation under the control of the licensee. This dose does not include occupational dose or doses received from background radiation, as a patient from medical practices, or from voluntary participation in medical research programs.

4.11 Qualitative Whole Body Count – An in-vivo measurement performed with a personnel contamination monitor as a screening process to identify the presence of radioactive material internally.

4.12 Quantitative Whole Body Count – An in-vivo measurement performed with the Chair or Stand-Up Whole Body Counter which provides isotopic identification and quantification of radioactive material for dose analysis.

4.13 Radiation Work Permit (RWP) – A document issued for a specific task, job, or series of tasks specifying the radiological precautions to be followed while conducting the particular activity. Radiation Work Permits are used to provide accurate exposure usage accounting for specific tasks.

4.14 Radiation Worker – An individual who may receive occupational dose and who is qualified for unescorted access to CPNPP Radiologically Controlled Area(s). Exposures to radiation workers should be determined by OSL badge and shall be reportable to the individual and to the NRC.

4.15 Radiation Worker RCA Card – A card used for self verification that allows the radiation worker to review radiological information prior to accessing the RCA (e.g., HRA briefings, EPD set-points, contamination levels, etc.).

4.16 Radiologically Controlled Area (RCA) – Any area where access is controlled by the licensee for the purposes of protection of individuals from exposure to radiation and radioactive materials.

4.17 RP Computer System – The computer system that is currently installed and used by Radiation Protection for various radiation protection related functions.

4.18 Work Process Computer System – This is the computer software program that is used as an aid to the administration, tracking and scheduling of maintenance, calibration, inspection, testing and approved modification activities.

5.0 RESPONSIBILITIES

5.1 Radiation Protection Manager

[C] 5.1.1 Responsible for providing Radiation Work and General Access Permits for activities performed in the RCA.
[00796][27374]

6.5 Escorted Radiation Workers

[C] Individuals performing work inside the RCA should normally obtain Radiation Worker Training qualifications. Under unusual/extenuating circumstances, the individual may be allowed entry into the RCA as an Escorted Radiation Worker.
[00786]

6.5.1 Individuals should not be granted Escorted Radiation Worker status without the authorization of a RP Supervisor or Qualified Radiation Protection Technician.

6.5.2 Escorted Radiation Workers shall be escorted at all times by a qualified Radiation Worker. The qualified radiation worker performing escort duties may turn the Escorted Radiation Worker over to another qualified radiation worker in the field, without initializing any additional documentation.

6.5.3 During emergencies, personnel from offsite agencies or unqualified site personnel should be allowed immediate access to the RCA as Escorted Radiation Workers. STA-656-3 should be completed immediately after the entry. Radiation Protection should provide a qualified Radiation Worker escort for emergency personnel entering the RCA. The whole body count requirement prior to RCA entry should be waived by the RP Supervisor or designee, as appropriate.

6.5.4 If the Escorted Radiation Worker requests that his exposure record be entered on PADS, the worker must sign SEC-120-1, Comanche Peak Nuclear Power Plant NEI Standard Consent form. The consent form should be stapled to STA-656-3 for Dosimetry.

6.5.5 Escorted Radiation Workers shall complete Section 1 of STA-656-3. The individual should provide an estimate of current year exposure. Escorted Radiation Workers should have a qualitative whole body count performed using a PM-7 prior to entry into the RCA. Have the individual step into a PM-7 and document on STA-656-3 that no alarms occurred. If the Individual alarms the PM-7 a quantitative whole body count is required prior to RCA Entry.

6.5.6 If an Escorted Radiation Worker declares her pregnancy, have her report to RP (Dosimetry) to complete the necessary paper work. RP (Dosimetry) should initiate an STA-655-10. RP (Dosimetry) should ensure the Escorted Radiation Worker understands the monitoring requirements in STA-655 and that she is responsible for adhering to the requirements.

6.5.7 Escorted Radiation Workers should NOT be allowed access to Locked High Radiation Areas or Very High Radiation Areas, unless sufficient training is provided or documented.

6.5.8 Escorted Radiation Workers should be limited to 100 mrem during the monitoring period. In the event pre-job dose estimates indicate a projected dose greater than 100 mrem, initiate restriction changes in accordance with Section 6.6, Restriction Changes for Escorted Radiation Workers.

6.5.9 Verify, using the RP Computer System, that the individual does not already have an OSL badge assigned. Assign an OSL badge and record the OSL badge number on STA-656-3. Complete the OSL badge label with the individual's name and the last four digits of their SSN or Employee ID number, if available. **[CR-2001-002095]**

6.5.10 Verify that Section I of STA-656-3 has been completed properly and brief the Escorted Radiation Worker on the radiological conditions in the area(s) to be entered. Complete Section II of STA-656-3.

Examination Outline Cross-Reference	Level	RO	SRO
Rev. Date: 1/18/2015	Tier #	3	n/a
Change: 4	Group #		n/a
	K/A #	G2.3.13	n/a
Level of Difficulty: 3	Importance Rating	3.4	n/a

Knowledge of radiological safety procedures pertaining to licensed operator duties, such as response to radiation monitor alarms, containment entry requirements, fuel handling responsibilities, access to locked high-radiation areas, aligning filters, etc.

Question 73

Complete the following statements with regards to containment entry requirements when the reactor is shut down for refueling (MODE 6).

1. ____(1)____is <u>responsible</u> for authorizing a containment entry.

2. If this entry is to include entering the SG Loop Rooms, Plant Manager approval ____(2)____ required.

A. (1) Unit SRO
(2) is

B. (1) Unit SRO
(2) is NOT

C. (1) Shift Manager
(2) is

D. (1) Shift Manager
(2) is NOT

Answer: D

This question matches the KA by requiring knowledge of containment entry requirements.

Explanation / Plausibility:

A. 1st part is incorrect because the SM is responsible for authorizing containment entry. It is plausible because being unit specific, the unit SRO is required to be aware of any entries. 2nd part is incorrect because the PM authorization is not required. It is plausible because if you were in Mode 1 or 2, STA-620 CONTAINMENT ENTRY, states that the entry should have the RPM or PM approval.

B. 1st part is incorrect but plausible (see A). 2nd part is correct.

C. 1st part is correct. 2nd part is incorrect but plausible (see A).

D. 1st part is correct. 2nd part is correct.

Technical Reference: (Attach if not previously provided including revision number)	STA-620 CONTAINMENT ENTRY

Proposed references to be provided to applicants during examination: _____

Learning Objective: _____

Question Source:	Bank #	
	Modified Bank#	
	New	X
Question History:	Last NRC Exam	
Question Cognitive Level	Memory or Fundamental Knowledge	X
	Comprehension or Analysis	
10 CFR Part 55 Content:	55.41	41.12
	55.43	n/a

5.0 RESPONSIBILITIES

5.1 Shift Manager

5.1.1 Responsible for verifying incore instrumentation is in the stored position and tagged out of service, if required.

5.1.2 Responsible for turning ON Containment lighting prior to Containment Entry and for turning OFF Containment lighting after the work group exits Containment. Security should be contacted to ensure all personnel have exited containment. Contact CAS or SAS at ext. 5606 to obtain accountability report for applicable containment. IF a backup method is utilized for personnel accountability, THEN the RWO Supervisor will provide this information.

5.1.3 Responsible for authorizing a Containment Entry.

5.1.4 Responsible for signing Form STA-620-1 as specified in STA-702.

[C] 5.1.5 Responsible for assigning an individual to operate the Personnel Airlock.

5.1.6 Responsible for ensuring the Operations Department has a representative at the scheduled Containment pre-entry meetings when requested.

5.1.7 Responsible for having Containment atmosphere checked for Class C Atmosphere if Nitrogen or other gas leaks are suspected.

5.1.8 Responsible for performing leak test of Containment Airlock seals after entry completion as applicable.

6.1.2 During refueling outages and maintenance activities, or when Containment is otherwise occupied for extended periods, the incore detectors should be tagged out of service until work activities are completed and/or arrangements made to preclude entry to the following areas:

- 808'-Incore Instrumentation Room
- 808'-Excess Letdown Heat Exchanger Room
- 808'-Steam Generator Loop Rooms
- 832'-Incore Instrumentation Room
- 832'-Regenerative Heat Exchanger Room
- 849'-Incore Instrumentation Room

IF either of the following is true, THEN Caution Tags may be lifted by the Shift Manager:

- The detectors have been placed in storage and/or are incapable of being withdrawn or moved during performance of maintenance and testing.

- It has been determined by Radiation Protection that operation of the incore detectors will not adversely affect other activities in Containment.

6.1.3 IF entry into the Seal Table or Incore Drive rooms is required for reasons other than repair of the Incore System, THEN the Incore instrumentation shall be placed within the reactor core or otherwise located to minimize exposure; AND should be tagged out of service.

6.1.4 When in MODES 1 and 2, entry into the S/G Loop Rooms should be approved by the Radiation Protection Manager or the Plant Manager. Entry should be in accordance with STA-660.

Examination Outline Cross-Reference	Level	RO	SRO
Rev. Date: 1/7/2015	Tier #	3	n/a
Change: 1	Group #		n/a
	K/A #	G2.4.18	n/a
Level of Difficulty: 3	Importance Rating	3.3	n/a

Knowledge of the specific bases for EOPs.

Question 74

Which ONE of the following is correct regarding how the SGTR procedure steps are performed based on SG pressures?

A. The RCS cooldown termination point is based on the lowest ruptured SG pressure but the intact SG pressures are maintained lower than the ruptured SG pressure to maintain RCS Subcooling.

B. The RCS cooldown termination point is based on the lowest intact SG pressure and the intact SG pressures are maintained lower than the ruptured SG pressure to maintain RCS Subcooling.

C. The RCS cooldown termination point is based on the lowest ruptured SG pressure but the intact SG pressures are maintained higher than the ruptured SG pressure to minimize the spread of contamination.

D. The RCS cooldown termination point is based on the lowest intact SG pressure and the intact SG pressures are maintained higher than the ruptured SG pressure to minimize the spread of contamination.

Answer: A

This question matches the KA by requiring knowledge of the bases for EOP steps.

Explanation / Plausibility:

A. Correct. The Core Exit Temperature target is based on the lowest ruptured SG pressure and the intact SG pressures are maintained lower than the ruptured SG pressure to maintain RCS SCM.

B. Incorrect because the Core Exit Temperature target is based on the ruptured SG pressure. It is plausible because the intact SGs are what is used to reduce the pressure.

C. Incorrect because the intact SGs are maintained at a lower pressure than the ruptured SG. It is plausible because many step in this EOP section are designed around minimizing the spread of contamination.

D. Incorrect but plausible (see B & C).

Technical Reference: (Attach if not previously provided including revision number)	EOP 3.0A, STEAM GENERATOR TUBE RUPTURE

Proposed references to be provided to applicants during examination: _____

Learning Objective: **STATE** the bases for operator actions, notes and cautions from EOP-3.0 (LO21.ERG.E3A.OB05)

Question Source:	Bank #		
	Modified Bank#		
	New	X	
Question History:	Last NRC Exam		
Question Cognitive Level	Memory or Fundamental Knowledge		X
	Comprehension or Analysis		
10 CFR Part 55 Content:	55.41	41.10	
	55.43	n/a	

STEP	ACTION/EXPECTED RESPONSE	RESPONSE NOT OBTAINED

c. Determine required core exit temperature from Table 1.

TABLE 1

LOWEST -RUPTURED SG PRESSURE (PSIG)	CORE EXIT TEMPERATURE (°F)
1200	523°F (493°F for Adverse Containment)
1150	518°F (487°F for Adverse Containment)
1100	512°F (481°F for Adverse Containment)
1050	507°F (475°F for Adverse Containment)
1000	501°F (469°F for Adverse Containment)
950	495°F (462°F for Adverse Containment)
900	488°F (454°F for Adverse Containment)
850	482°F (447°F for Adverse Containment)
800	475°F (440°F for Adverse Containment)
750	467°F (431°F for Adverse Containment)
700	459°F (421°F for Adverse Containment)
650	450°F (412°F for Adverse Containment)
600	441°F (402°F for Adverse Containment)
550	431°F (391°F for Adverse Containment)
500	421°F (380°F for Adverse Containment)
450	409°F (366°F for Adverse Containment)
420	402°F (358°F for Adverse Containment)

ATTACHMENT 6
PAGE 2 OF 50

BASES

STEP 2: Subsequent recovery actions require the operator to distinguish between intact steam generators and those with ruptured tubes in order to minimize primary to secondary leakage. Symptoms evident after reactor trip which identify steam generators with failed tubes include high or increasing secondary side activity and uncontrollably increasing steam generator levels in the affected steam generators. Although the steam generator level response should be a clear indication of the affected steam generators for larger tube failures, it may be necessary to sample for high activity if leakage is relatively small. The operator is instructed to continue with Steps 7 through 15 while attempting to identify the ruptured steam generators in order to expedite recovery.

Trending of secondary radiation monitors ensures that any changes in secondary radiation levels can be compared to previous plant conditions. This will aid in primary to secondary leak determination.

The instruction of this step may apply during subsequent action (WHEN, THEN action); therefore, this step is identified as a Continuous Action Step.

CAUTION: Subsequent operator actions isolate steam flow from the ruptured steam generators to the TDAFW pump. If no intact steam generators are available to supply the TDAFW pump and no other source of feed flow is available, a loss of secondary heat sink could occur. Therefore, this isolation must not be performed.

CAUTION: If no intact steam generator is available, steam release must be maintained from either a ruptured or faulted steam generator to cool the RCS to RHR system operating conditions. If a ruptured steam generator is selected, steam release from that steam generator should not be isolated as directed in the following step.

The Plant Staff may be contacted to assist in evaluating, or to perform the evaluation for determination of performing an RCS cooldown using a faulted SG(s) or a ruptured SG(s). In the unlikely event that no intact steam generator is available, either a faulted steam generator, (i.e., one with a secondary side break), or a ruptured steam generator must be selected for cooling the RCS to RHR System operating conditions. This decision should be based upon consideration of the concerns created by each method and an evaluation of the parameters that effect them. A secondary side break leads to uncontrolled steaming of the affected steam generator and possible overcooling of the RCS. Continued feed flow to this steam generator will increase the amount of steam discharged and can increase the uncontrolled cooldown of the RCS.

ATTACHMENT 6
PAGE 10 OF 50

BASES

For small tube failures, PRZR pressure may remain above the P-11 permissive. Although pressure will decrease as the RCS is cooled, it may still remain greater than the P-11 permissive. In that case, the operator can reduce PRZR pressure using PRZR spray or a PORV, so that the SI signal can be blocked. It may be necessary to complete subsequent steps to reset SI, reset containment isolation and establish instrument air to containment before PRZR spray or a PORV can be used to reduce pressure. Timely performance of these steps may be necessary to avoid main steamline isolation. For small tube failures, PRZR pressure may remain above the P-11 permissive. Although pressure will decrease as the RCS is cooled, it may still remain greater than the P-11 permissive. In that case the operator can reduce PRZR pressure using PRZR spray or a PORV, so that the SI signal can be blocked.

The RCP trip criteria does not apply after a controlled cooldown is initiated.

As previously demonstrated, the pressure of the intact steam generators must be maintained less than the pressure of the ruptured steam generators in order to maintain RCS subcooling. Since flow from the ruptured steam generator should be isolated, this pressure differential is established by dumping steam only from the intact steam generators. Steam dump to the condenser is preferred to minimize radiological releases and conserve feedwater supply. However, the ARVs on the intact steam generators provide an alternative steam release path. If no intact steam generator is available, RCS temperature should be controlled by adjusting feed flow to a faulted steam generator or by releasing steam from a ruptured steam generator. This latter method will result in continued primary-to-secondary leakage and is best handled in ECA-3.1A, SGTR WITH LOSS OF REACTOR COOLANT-SUBCOOLED RECOVERY DESIRED. The Plant Staff may be contacted to assist in evaluating, or to perform the evaluation for determination of performing an RCS cooldown using a faulted SG(s) or a ruptured SG(s). In the unlikely event that no intact steam generator is available, either a faulted steam generator, (i.e., one with a secondary side break), or a ruptured steam generator must be selected for cooling the RCS to RHR System operating conditions. This decision should be based upon consideration of the concerns created by each method and an evaluation of the parameters that effect them. A secondary side break leads to uncontrolled steaming of the affected steam generator and possible overcooling of the RCS. Continued feed flow to this steam generator will increase the amount of steam discharged and can increase the uncontrolled cooldown of the RCS.

Examination Outline Cross-Reference	Level	RO	SRO
Rev. Date: 1/7/2015	Tier #	3	n/a
Change: 1	Group #		n/a
	K/A #	G 2.4.46	n/a
Level of Difficulty: 2	Importance Rating	4.2	n/a

Ability to verify that the alarms are consistent with the plant conditions.

Question 75

Unit 1 plant conditions:

- RCS heat up is in progress
- RCS temperature = 340°F
- LTOP RCS PRESS HI/AUCT TEMP LO is lit
- AT LO TEMP PORV 455A APPROACHING LMT PRESS is dark
- PORV 1-PCV-455A is closed

Based on the above plant conditions, complete the following statements:

1. 1-PCV-455A ____(1)____.

2. If / when the design LTOP event were to occur, a single PORV ____(2)____adequately relieve pressure sufficiently to prevent system failure.

A. (1) has failed to open and should be opened to relieve RCS pressure
(2) could

B. (1) has failed to open and should be opened to relieve RCS pressure
(2) could NOT

C. (1) is in the correct position
(2) could

D. (1) is in the correct position
(2) could NOT

Answer: C

This question matches the KA by requiring knowledge of how annunciators interact with the PORV system operation.

Explanation / Plausibility:

A. 1st part is incorrect because the PORV should still be closed. It is plausible because LTOP RCS PRESS HI/AUCT TEMP LO will alarm if RCS pressure exceeds the setpoint. 2nd part is correct. 1 PORV could adequately protect the RCS from the design pressure transient.

B. 1st part is incorrect but plausible (see A). 2nd part is incorrect because 1 PORV is adequate. It is plausible because 2 PORVs are required to be operable per TS.

C. 1st part is correct. 2nd part is correct.

D. 1st part is correct. 2nd part is incorrect but plausible (see B).

Technical Reference: (Attach if not previously provided including revision number)	LTOP Study Guide

Proposed references to be provided to applicants during examination: _____

Learning Objective:	**DESCRIBE** the components of the Low Temperature Overpressure Protection System including interrelations with other systems to include interlocks and control loops. (LO21.SYS.PP2.OB02)

Question Source:	Bank #	
	Modified Bank#	
	New	X
Question History:	Last NRC Exam	
Question Cognitive Level	Memory or Fundamental Knowledge	
	Comprehension or Analysis	X

10 CFR Part 55 Content:	55.41	41.10
	55.43	n/a

LOW TEMPERATURE OVERPRESSURE PROTECTION Study Guide

Four wide range temperature instruments (two hot leg and two cold leg) supply continuous analog inputs to two auctioneering devices. Each auctioneering device selects the lowest temperature. The output from one of the auctioneering devices is used as an interlocking (or arming) permissive for the actuation logic of the other PORV (u-PCV-456), and in the annunciation logic for u-ALB-5B, window 4.2, "AT LO TEMP PRZR PORV BLK VLV u-8000 A/B CLOSE." This alarm is actuated if valve u-8000B is closed coincident with a low auctioneered temperature below 350°F. The alarm alerts the operator to open valve u-8000B, placing PORV u-PCV-456 on-line to provide overpressure protection. The output from the other auctioneering device is the input to the function generator.

The function generator uses RCS temperature to calculate a reference pressure based on the plant's pressure and temperature limits. The reference pressure is compared to the actual RCS pressure measured by the wide range pressure channel to produce an error signal. As RCS pressure increases approaching reference pressure, the decreasing error signal will annunciate Main Control Board alarm u-ALB-6D window 1.11, "AT LO TEMP PORV 455A APPROACHING LMT PRESS" at 20 psi below the PORV actuation setpoint. When RCS pressure increases further to equal reference pressure, an error signal of zero will generate an actuation signal to open u-PCV-455A and annunciator u-ALB-5B window 2.4, "LTOP RCS PRESS HI/AUCT TEMP LO" will alarm. If the interlocking permissive from the other train of RCS wide range temperature <350°F is present (LTOP armed), u-PCV-455A will open. The "LTOP RCS PRESS HI/AUCT TEMP LO" alarm is received when either RCS pressure is greater than reference pressure or RCS wide range temperature is <350°F.

Upon receipt of the actuation signal, two solenoid valves in series energize to align nitrogen to the u-PCV-455A pneumatic actuator, causing the PORV to open. Upon sufficient mass discharge, the RCS pressure will decrease, clearing the actuation signal. Removal of this signal deenergizes the solenoid valves, isolating the nitrogen supply and venting the PORV actuator. The actuator spring pressure causes the PORV to close. Automatic actuation is defeated when the control mode selector switch is not in AUTO **(see Figure 4)** and when PORV control is transferred to the Remote Shutdown Panel.

As previously stated, the logic provided to u-PCV-456 **(see Figure 3)** is identical, utilizing electrically separate RCS wide range temperature and pressure channels. The nitrogen supply provided u-PCV-456 is also independent from that of u-PCV-455A.

3.4 REACTOR COOLANT SYSTEM (RCS)

3.4.12 Low Temperature Overpressure Protection (LTOP) System

LCO 3.4.12 An LTOP System shall be OPERABLE with a maximum of zero safety injection pumps and two charging pumps capable of injecting into the RCS and the accumulators isolated and one of the following pressure relief capabilities:

a. Two power operated relief valves (PORVs) with lift settings within the limits specified in the PTLR, or

b. Two residual heat removal (RHR) suction relief valves with setpoints ≥ 436.5 psig and ≤ 463.5 psig, or

c. One PORV with a lift setting within the limits specified in the PTLR and one RHR suction relief valve with a setpoint ≥ 436.5 psig and ≤ 463.5 psig, or

d. The RCS depressurized and an RCS vent of ≥ 2.98 square inches.

----------NOTE----------
Accumulator may be unisolated when accumulator pressure is less than the maximum RCS pressure for the existing RCS cold leg temperature allowed by the P/T limit curves provided in the PTLR.

APPLICABILITY: MODE 4, MODE 5,
MODE 6 when the reactor vessel head is on

----------NOTE----------
The LCO is not applicable when all RCS cold leg temperatures are > 320°F and the following conditions are met:

a. At least one reactor coolant pump is in operation, and

b. Pressurizer level is ≤ 92%, and

c. The plant heatup rate is limited to 60°F in any one hour period.
