Group A

FOIA/PA NO: 2015-00158

RECORDS BEING RELEASED IN THEIR ENTIRETY

United States Department of State

Washington, D.C. 20520

July 31, 1995

Dr. Karen Henderson
International Policy Analyst
Office of International Programs
U.S. Nuclear Regulatory Commission
Washington, D.C.

Dear Dr. Henderson:

The Department of State concurs in the declassification of the November 1, 1989 memorandum from Harold Denton to the NRC Commissioners entitled "Report of Travel to Cuba October 18-21, 1989." This report was based on the travel to Cuba by officials representing NRC and the World Association of Nuclear Operators (WANO), and it details discussions with officials in Cuba's nuclear research, power, and regulatory establishments.

I understand that the Department of Energy has written separately to concur in removing the proprietary classification from the NRC's limited study on the safety of the Juragua nuclear power plant (NUREG/CR-5202 (P), ITS/NRC/88-1), and to express no objection to the release of this report.

Sincerely,

Richard J. K. Stratford
Director
Office of Nuclear Energy Affairs

~~CONFIDENTIAL~~

November 1, 1989

MEMORANDUM FOR: Chairman Carr
Commissioner Roberts
Commissioner Rogers
Commissioner Curtiss

FROM: Harold R. Denton, Director
Office of Governmental and Public Affairs

SUBJECT: Report of Travel to Cuba October 18-21, 1989

On October 18 Mr. William Lee, CEO of Duke Power, Mr. Anthony Owen, manager of Duke Power's Catawba Nuclear Station, and I left for Havana, Cuba for a three-day visit to the country's nuclear research, power, and regulatory establishments.

Background

In February 1988 the Cuba desk at the State Department contacted NRC to pass on a request from Mr. Ramon Sanchez-Parodi, Chief of the Cuban Interests section at the Czech Embassy in Washington, for a meeting with Chairman Zech and a visit to the Oconee Nuclear Power Plant (Duke Power) in South Carolina. This request was in response to a December 1987 visit made by a U.S. Interest section representative in Cuba to the Juragua nuclear power plant under construction at Cienfuegos. After consulting with the State Department, it was agreed that (a) as a result of improvements in U.S.-Cuban relations, and in view of the importance of international cooperation in the nuclear safety area, State would approve the Cuban request; (b) interaction with the Cubans should be done strictly reciprocally and at a measured pace; (c) the Sanchez-Parodi meeting at NRC should not be at the Commission level; (d) Mr. Sanchez-Parodi could be accompanied by one nuclear specialist on the proposed plant visit, providing it was agreed formally that the U.S. could, at a future date, send a specialist to visit Juragua; and (e) a separate request to Duke Power for two Cuban nuclear officials to visit Oconee, an older B&W plant, should be incorporated into a single site visit to the newer McGuire Westinghouse facility (closer to the Soviet-designed VVER under construction in Cuba).

Hosted by the World Association of Nuclear Operators (WANO), on May 18-20 Mr. Alejandro V. Bilbao Alfonso, director of radiation protection and nuclear safety, Mr. Javier Rosales Arias, vice secretary of the Comision de Energia Atomica de Cuba (CEAC) and of the Secretario Ejecutiva para Asuntos Nucleares (SEAN), Mr. Sanchez-Parodi, and Mr. Reinaldo Garcia, interpreter, accompanied by NRC and Duke Power

~~CONFIDENTIAL~~

Classified By US Dept. of State
☐ Declassify on _____ (Date or Event)
☒ Originating Agency's Determination Required
Derivative Classifier: Karen Henderson

Declassified On: 28 July 95
By Authority Of: R. Stanford US Dept of State
By: Ronald D. Stanford, OIP/NEHR

A2

representatives, visited NRC's Region II offices, toured the McGuire Nuclear Station and the National Academy for Nuclear Training-McGuire branch, and met with Duke Power officials.

As a result of this visit and subsequent State Department negotiations, an invitation from the SEAN was extended to NRC to accompany Mssrs. Lee and Owen. We flew to Cuba (Figure 1) the evening of Wednesday, October 18, and returned to the U.S. the evening of Saturday, October 21. The program (Attachment A) was set by the SEAN and not made available to the team until their arrival in Cuba. Throughout the visit the team was accompanied by Dr. Alejandro V. Bilbao Alfonso, Director of the Center for Radiation Protection and Health (who had visited McGuire). Mr. Brad Hittle of the U.S. Interest Section in Havana was contacted at the beginning of the visit and he accompanied us on the plant visit.

Thursday, October 19

A. Center for Applied Studies on Nuclear Development

In the morning the team visited the Center for Applied Studies on Nuclear Development in Havana. This was the first Cuban institute for basic nuclear research. It is loosely related organizationally to the Juragua nuclear power plant organization. In the small collection of older buildings are 191 employees, with 27 physicists, metallurgists, and other technical personnel. We were given a tour of the solid state physics department of the laboratory, where we saw some of the Center's research products and a display of posters, exhibits and publications by the staff in Spanish. The work is primarily in the areas of characterization of steels (e.g., corrosion and welding effects) and of zeolites, and theoretical studies in nuclear physics.

In an adjoining building we saw basic equipment for etching and printing circuit boards, though the facility was more for training than mass production. Radiation monitors for environmental and other purposes were being built but we understand the USSR will be supplying the personnel monitors in use at Juragua.

During the tour the Cuban hosts noted plans to acquire a research reactor, but did not supply any other information.

B. Los Hermanos Ameijeiras Hospital

At mid-day the team was taken to the Hermanos Ameijeiras Hospital, where the focus was on the use of radioisotopes in cancer therapy. We were told that in Cuba there are three levels of health care: (1) the primary physician level, where there are one doctor for every 120 families in the country; (2) regional hospitals, where 99% of the population receives its health care; and (3) top level medical care facilities such as Hermanos Ameijeiras, which are well and modernly equipped.

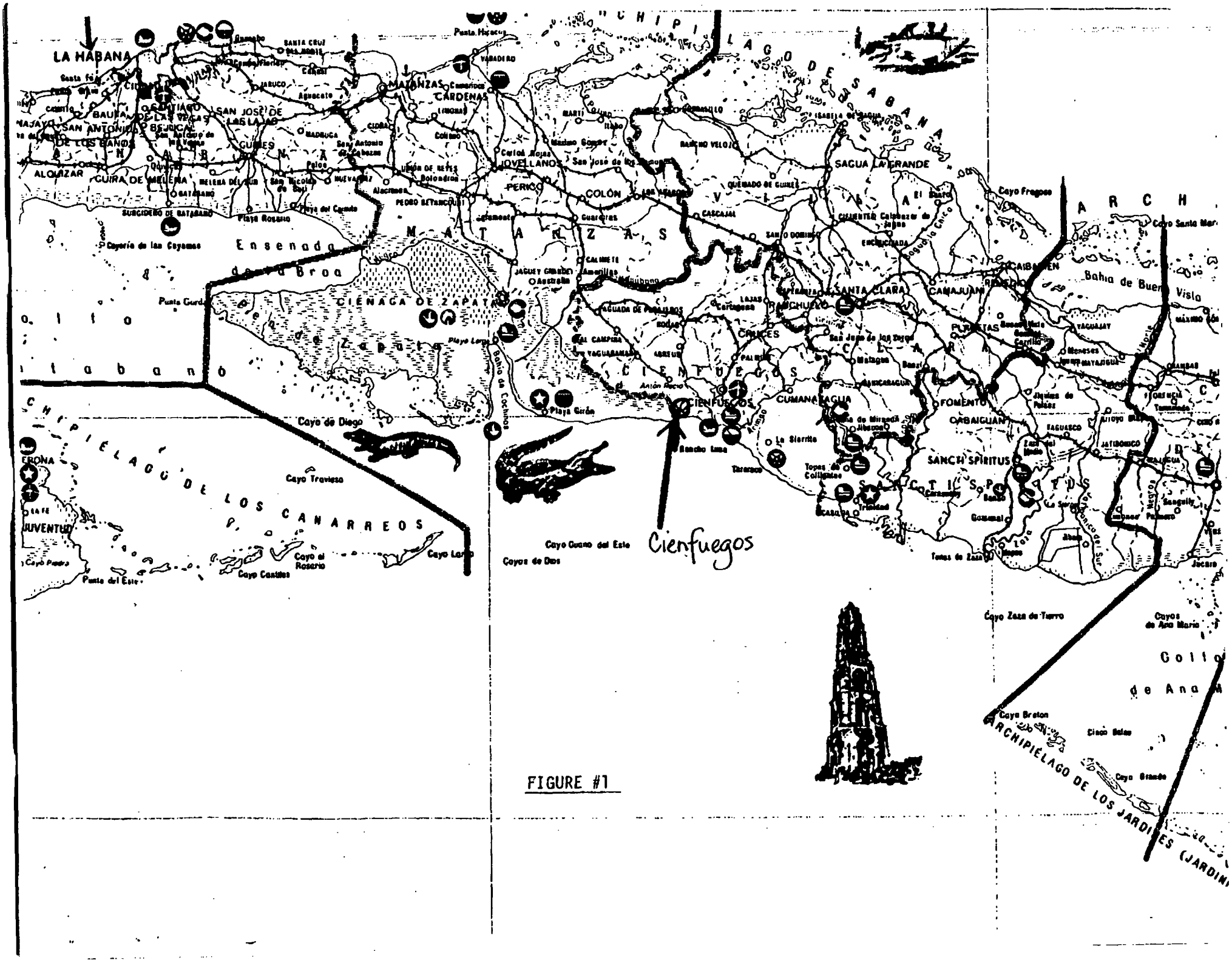

Cienfuegos

FIGURE #1

At Hermanos Ameijeiras there is a West German Siemens model CAT scan in the basement, and interesting graphic displays on the walls of the work done at the hospital on patients from all over Latin America. In a new building next door the Cubans are installing a linear accelerator for therapy, and knowledgeable physicists explained the instrument's shielding and calibration.

C. Genetics and Biotechnology Engineering Institute

During the afternoon the team visited the Genetics and Biotechnology Engineering Institute, which was started three years ago. The 70,000 square meters of space on the 15 acre site will include a hotel (not finished). The focus of research is the production of inexpensive interferon for vaccines and treatment of viral infections (e.g., for Type B meningitis and AIDS kits). Radioactive materials, were being used in the laboratories, which are equipped with basic equipment for biological research. The Director, Dr. Luis Herrera, is an enthusiastic, knowledgeable individual who had visited the U.S., including Harvard and the Cold Spring Harbor facilities, and appeared very current in his field of study.

Friday, October 20

A. SEAN Regional Offices

The team was driven from Havana to the SEAN Regional offices ("Territorial Delegation") in Cienfuegos, approximately 3 hours east-southeast of the capital. Dr. Bilbao and several inspectors made presentations on the Cuban nuclear program and the role of the Center for Radiation Protection and Health, headquartered at the regional office.

The SEAN and its subordinate organization CEAC were established by law in 1982 and given independent responsibility for nuclear facilities, isotopes, safety (including operator licensing), research and development, and promotion. In 1987 Law No. 98 decreed a reorganization of CEAC and modernized the Commission's authority. (Copies of these laws can be obtained from GPA/IP.) The CEAC's regulatory functions are centered in the Center for Radiation Protection and Health, which is responsible for plant licensing and inspection. The Ministry of Basic Industry is the financier/owner/operator of the Juragua plant, and will be responsible for the operation of the facility when it is completed. The Ministry of Construction is building the facility, with Cuban and Soviet labor, under contract to the Ministry of Basic Industry.

There were seven SEAN on-site inspectors at Juragua, as well as representatives from the USSR and concerned Cuban Government agencies. SEAN inspectors all seemed to be graduates of Soviet and Cuban schools, and many were familiar with the Novovoronesh training facilities and personnel. Dr. Bilbao, for instance, is a student of Dr. Sidorenko. These inspectors hold monthly meetings, chaired by SEAN, to review data gathered by their on-site representatives. Standards used for reviews of the program are derived from the USSR nuclear program only. The main difficulty noted by the Cuban officials is the interpretation of USSR standards. In addition to consulting with on-site Soviet inspectors, the Cubans said they have often stopped construction in order to work out interpretive difficulties before agreeing on work schedules. The Cubans have written very few standards of their own, only in the radiation protection area.

There are also forty other holders of SEAN licenses in the Cienfuegos region including hospitals and industries. Cuba is divided into two regions at present, with only the Juragua region well staffed and operational. The other region is in Holguin in the southeast end of the island, where a second Soviet-supplied power plant is to be sited.

B. Environmental Radiation Monitoring Laboratory

The team was then taken to the Environmental Radiation Monitoring Laboratory located about 1 mile from the plant site, closer to the ocean. The Laboratory, run by Dr. Bilbao, is responsible for director control and knowledge of the effects of the power plant on the environment. To this end for five years they have monitored water, air, vegetation, seafood, and fauna for natural background concentrations in order to build up a data base. The Laboratory is sparsely equipped and smelled of sour milk during the visit, the result, it was explained, of condensing milk for radiation counting. They indicated that Juragua has a natural background of about five microrems per hour, with the rest of the island between 4-7 microrems per hour. The Laboratory will also be responsible for carrying out formal dosimetry of plant workers. When the Juragua plant is operational, SEAN will provide badges for the workers to provide an independent source of information on radiation doses.

C. Juragua Nuclear Power Station

From the Laboratory the team was taken by ferry across Cienfuegos Bay (Figure 2) to the power plant site. We were told that the nearby city has a population of 10,000. In addition, there are 400 Soviet specialists at Juragua, who have their own housing apart from the Cuban workers (Figures 3, 4, and 5).

It was explained to the team that the plan is to finish Units 1 and 2 first, then begin construction of Units 3 and 4. We observed that the intake/discharge structure, however, been built for all four units (Figure 6).

During the tour of Unit 1 several hundred workers were present inside the containment, positioning reinforcing steel and pouring concrete. We were told there were several hundred associated workers also involved in activities outside the containment. Welding has been done on the containment liner only (Figure 7). The containment structure of Unit 1 has been completed a few feet above the polar crane. Construction was being accomplished by using large cranes mounted on rails, and these will be used for lifting and inserting the pressure vessel later, after the containment in complete. The turbine generator building (Figures 8 and 9) is farther along in construction, with the turbine, generator, and large piping largely installed. The reactor vessel is due to be delivered from the Soviet Union in 1991, and the plant is scheduled to be operational in 1993. The Chief Engineer and Subdirector for Safety, Julio Paz Ferrer, who led the tour of the site, is quite knowledgeable of safety issues, enthusiastic, and speaks good English. He detailed differences between the Cuban and Finnish VVERs, such as design changes made to accumulate the higher temperature of the seawater, the 60 cycle electric grid (50 cycle in Finland), and the bubbler chambers in the containment (ice condensers in Finland).

D. Julio Cesar Castro Palomino Polytechnical School

The team was then taken into the Juragua training center, a facility which resembled a high school building with classrooms and workshops. The workshops were large rooms with training stations, and each station typically had a single gauge (e.g., temperature, pressure, transformer) for discrete training on equipment rather than a holistic approach. The facility has had 800 graduates, mainly for construction trades. An elaborate training program is being developed for operators, which will include on-site training in the USSR, use of simulators, and involvement in the start-up operations of the plant. The program appeared to be a reasonable start for the Cuban nuclear program.

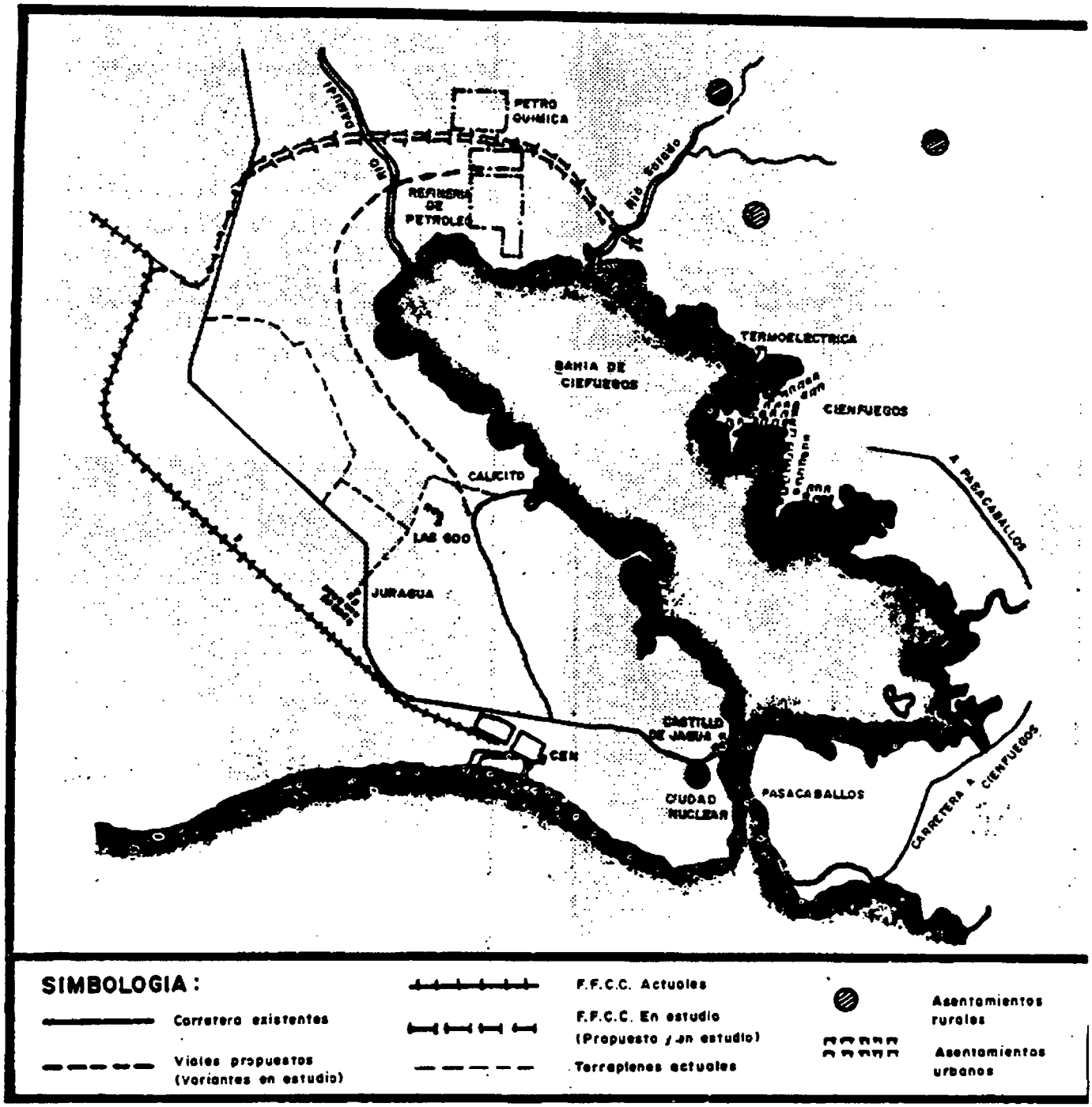
PETRO QUIMICA
REFINERIA DE PETROLEO
RIO DAMUJI
RIO ARIMAO
TERMOELECTRICA
BAHIA DE CIENFUEGOS
CIENFUEGOS
A PASACABALLOS
CALICITO
LAS GOO
JURAGUA
CASTILLO DE JAGUA
CEN
CIUDAD NUCLEAR
PASACABALLOS
CARRETERA A CIENFUEGOS
SIMBOLOGIA:
Carretera existentes
Viales propuestos (Variantes en estudio)
F.F.C.C. Actuales
F.F.C.C. En estudio (Propuesto y en estudio)
Terraplenes actuales
Asentamientos rurales
Asentamientos urbanos

FIGURE #2

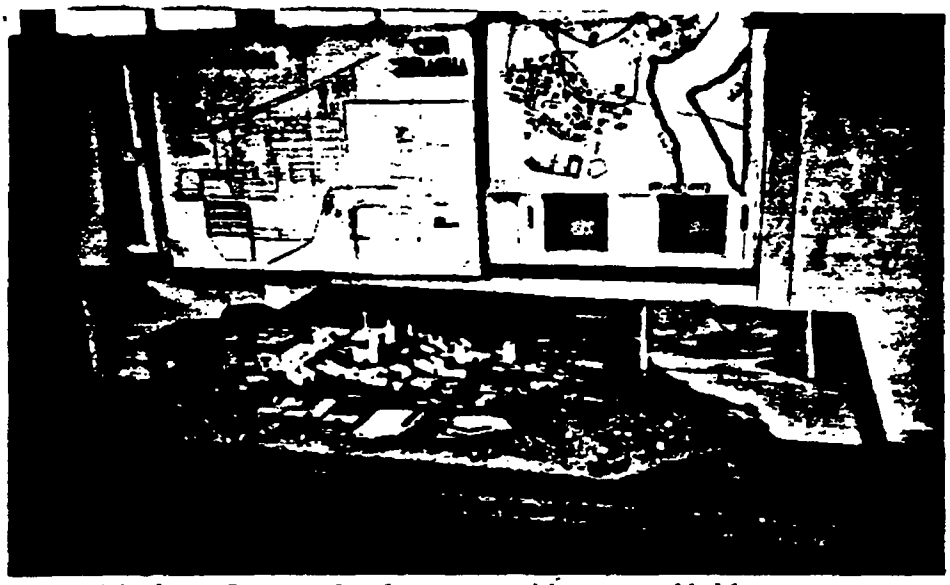

Model of new Juragua developments, with proposed bridge over strait into Cienfuegos harbor

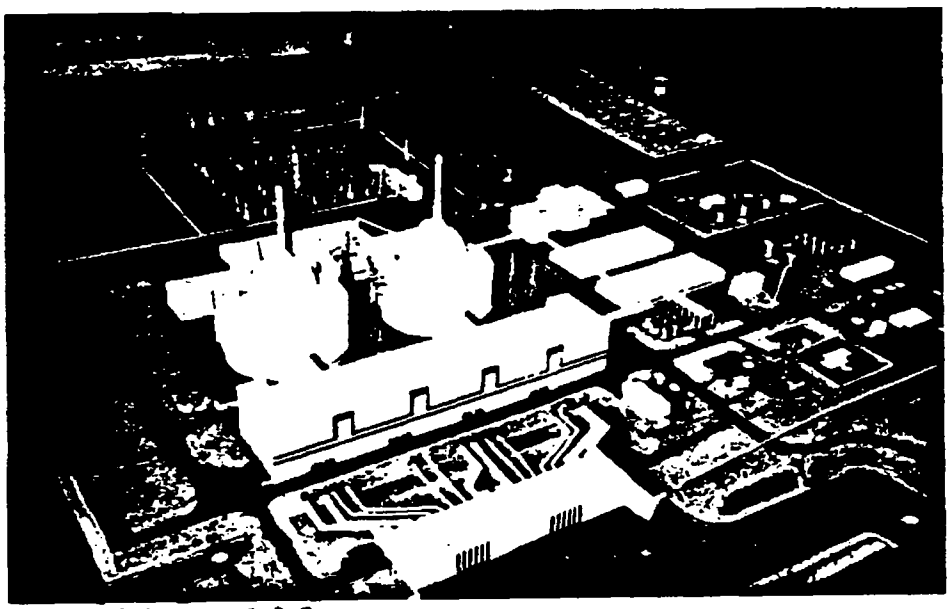

Model, Juragua 1 & 2

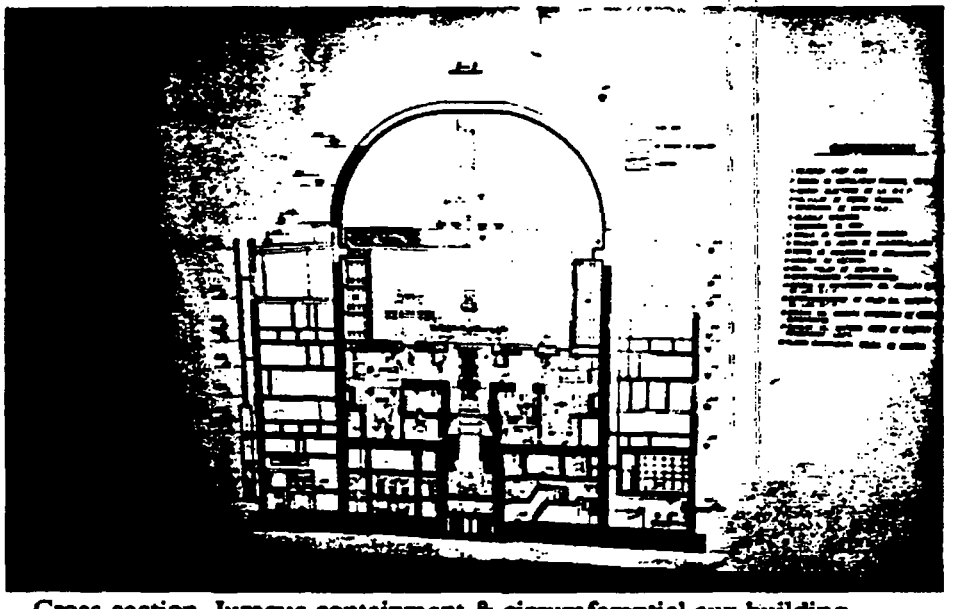

Cross-section, Juragua containment & circumferential aux building

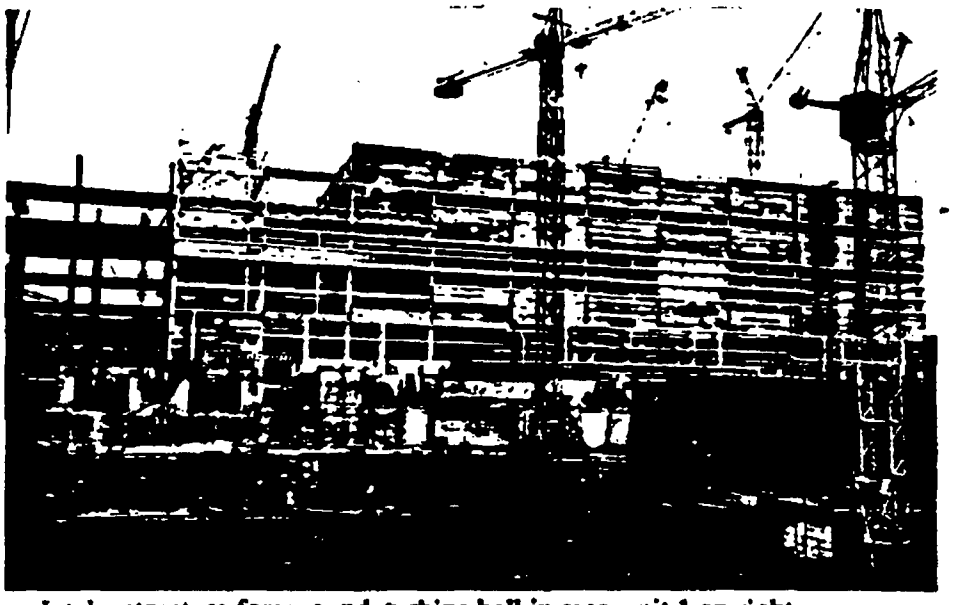

Intake structure foreground, turbine hall in rear, unit 1 on right

Containment liner plate, 8 mm

Turbine hall, operating floor

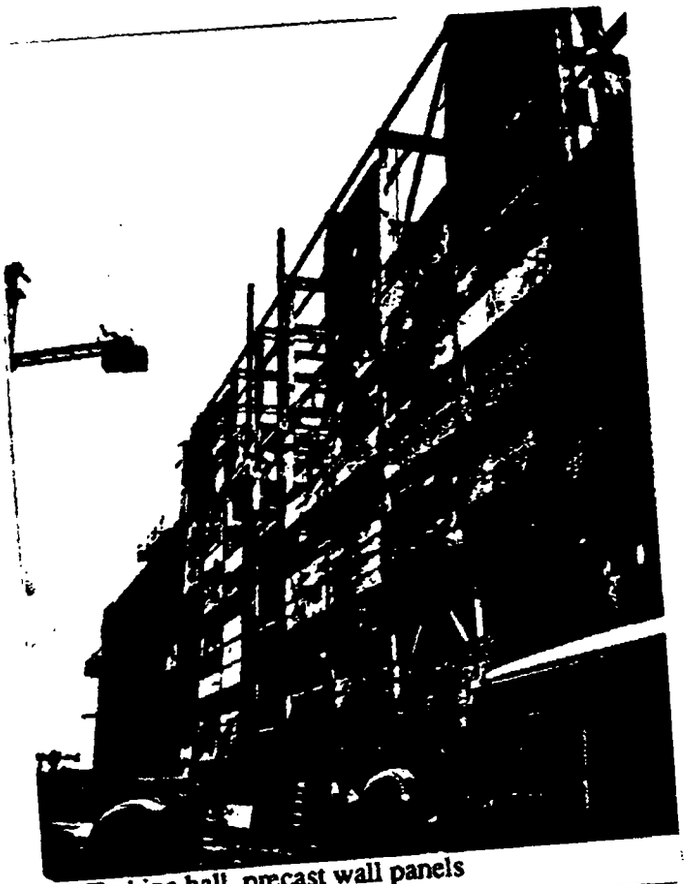

Turbine hall, precast wall panels

Saturday, October 21

A. Ministry of Basic Industry

At this meeting Vice Minister Rodrigo T. Ortiz Gomez discussed Cuba's energy situation. From 1958 to the present the country has experienced a 7% growth in demand for electricity per year; to meet this there is now a 3,000 MW installed generating capacity.

The team was then taken on a tour of the load dispatch center for Cuba, which was generating 2100 MW that day. For contrast, the team was then taken around the nearly complete new dispatch center, a modern facility with color coded displays prominently featuring the Juragua plant. The Vice Minister noted that demand for electricity is still growing at 7% a year. He also acknowledged that the entire island now has electricity, a fact of which the Government is very proud. Mr. Ortiz stated that the Government is committed to long range planning for its electrical generating capacity.

B. Meeting with Fidel Castro Diaz-Balart, Executive Secretary, CEAC

The two-hour meeting with Dr. Castro was conducted in English, which he speaks quite well. Dr. Castro opened the session by noting that the operation of a nuclear power station is an ambitious goal for a small country; however, Cuba is committed to doing it professionally and safely. To that end they have allocated the resources and Government attention necessary, such as arranging for the training of approximately 30 nuclear engineers a year from both Cuban and Soviet universities.

He turned to the subject of the Chernobyl accident, showing both an interest in, and knowledge of, the problems leading up to the disaster. It was his opinion that "the dynamics of operating a nuclear power plant were far more difficult than the statics."

Dr. Castro specifically asked us for our assessment of the Cuban program as it had been presented to us, and whether we had noted any holes that needed attention? Mr. Lee answered that the team had been impressed with the evident care taken in long-range planning, the enthusiastic and competent staff they had met, and praised the emphasis being given to training within the program. He went on to stress the value to Cuba of associating with countries with operating experience, and indicated that WANO would be a good venue in which to participate. I noted, in addition, that Cuba would benefit from having an on-site simulator for training, a concept with which Dr. Castro agreed.

C. Press Conference

Following the interview with Dr. Castro the team was interviewed by the press, including 10-12 journalists and some TV cameras -- all from Cuba or Latin American news agencies. The questions were generally non-controversial (e.g., "Can the Third World build and operate a nuclear power plant?", "What is the future of nuclear power in view of the problems of acid rain and the greenhouse effect?", and "What is the role of WANO?") and mostly were fielded by Mr. Lee.

SUMMARY

Dr. Castro is clearly in charge of the nuclear power program in Cuba. His discussion with the team showed his knowledge and involvement in the nuclear field, including his personal familiarity with various European as well as the Soviet programs through his own travel. If the program in Cuba succeeds, it will probably be in large measure because Dr. Castro has the intent and ability to tap the country's scarce resources. He stated flatly that the nuclear program is Cuba's single most important investment.

The other nuclear officials the team met were uniformly well informed and enthusiastic about their work. Dr. Bilbao, for instance, was a student of Dr. Sidorenko (USSR). He seems very safety conscious, and intent on using his authority in assuring the safe uses of nuclear energy. He stated that he recognized that Cuba had no control over the design of the plant. Therefore the CEAC proposed using radiation monitoring to assure the safety of the plant. Also Dr. Bilbao has obtained control over all radiation source imports, regardless of their final destination in Cuba. He spoke of the possibility of future cooperation with the U.S., particularly in the areas of environmental monitoring practices, and the training programs for on-site inspectors.

SEAN
/
Secretariat
Ejecutiva
para
Asuntos Nucleares

PROGRAM FOR THE VISIT OF THE AMERICAN DELEGATION TO CUBA

October 18th - 21st, 1989

ATTACHMENT A

Wednesday 18th

10:00 p.m.
Welcome at "José Martí" International Airport.
Lodging and dinner at residence.

∞ RAH KÁH

Thursday 19th

9:30 a.m.
Exchange of opinions on the programme of visit of the delegation to Cuba.

10:00 a.m.
Visit to the Center for Applied Studies on Nuclear Development.

12:00 m.
Visit to the "Hermanos Ameijeiras" Hospital.

1:30 p.m.
Welcome lunch.

4:00 p.m.
Visit to the Genetics and Biotechnology
'neering Institute.

p.m.
Tour around the Historical Section of the Old Town.

8:00 p.m.
Dinner at residence.

10:00 p.m.
Show at Tropicana cabaret.

Friday 20th

7:30 a.m.
Departure for Cienfuegos province.

10:30 a.m.
Visit to SEAN Territorial Delegation in Cienfuegos.

12:00 m.
Lunch at Palacio del Valle in Cienfuegos.

2:15 p.m.
Visit to the Enviromental Radiation Monitoring Laboratory.

3:00p.m.
Visit to Juraguá nuclear power plant.

5:00 p.m.
Visit to the "Julio César Castro Palomino" Polytechnical School.

6:00 p.m.
Meeting with the local press.

6:30 p.m.
Departure for Varadero Beach.

9:00 p.m.
Arrival at Varadero Beach.
Lodging at residence.

9:30 p.m.
Dinner at residence.

Saturday 21st

Tour around Varadero Beach.

10:00 a.m.

Departure for Havana City.

12:00 m.

Meeting with an officer from the Ministry of the Basic Industry

1:30 p.m.

Lunch at residence.

3:30 p.m.

Meeting with an officer from the Atomic Energy Commission of Cuba.

5:00 p.m.

Meeting with the press.

7:00 p.m.

Farewell dinner.

11:00 p.m.

Farewell at "José Martí" International Airport.

[redacted]

NUREG/CR-5202 (P)
ITS/NRC/88-1

Soviet Pressurized Water Reactors (VVERs) in Cuba: Comparative Analysis Against a U.S. PWR

Manuscript Completed: February 1989
Date Published: March 1989

Prepared by
P.B. Abramson, H. Komoriya

International Technical Services, Inc.
420 Lexington Avenue
New York, NY 10170

Prepared for
Office of Nuclear Regulatory Research
U.S. Nuclear Regulatory Commission
Washington, DC 20555
NRC FIN D1756

FOREIGN INFORMATION

This document contains information submitted to NRC by

Names on file with G. Sege, RES

which is described in 10CFR 2.790 (d)(2) and is exempt from mandatory public disclosure pursuant to 10CFR Part 9

WITHHOLD FROM PUBLIC DISCLOSURE

Edward R. Oklesson Jr. 4/12/89
Edward R. Oklesson, Jr., Security Adviser — Date
Office of Nuclear Regulatory Research

REMOVED FROM SENSITIVE UNCLASSIFIED INFORMATION CATEGORY ON JULY 10, 1995 PER KRISTEN SUOKKO, ASSOCIATE DIRECTOR, INTERNATIONAL NUCLEAR SAFETY, OFFICE OF NUCLEAR ENERGY, SCIENCE, AND TECHNOLOGY, U.S. DEPARTMENT OF ENERGY.
JULY 10, 1995

AVAILABILITY OF THIS INFORMATION IS LIMITED TO U.S. GOVERNMENT AGENCIES, CONTRACTORS, AND ORGANIZATIONS. IT IS NOT TO BE AVAILABLE OR DISTRIBUTED TO FOREIGN NATIONALS WITHOUT THE EXPRESSED WRITTEN CONSENT OF THE U.S. NRC.

[redacted]

A3

ABSTRACT

The features of two Soviet-designed pressurized water reactors, VVER-440 model V213s, currently being constructed in Cuba are reviewed, with particular attention to containment design and plant safety features. The design and safety features of the Cuban V213s are compared to a comparably sized U.S. PWR. The pressure suppression mechanisms of the Cuban V213 bubbler condenser containment system and the overall containment design are compared to those of both U.S. BWRs and PWRs. Similarities and differences in safety characteristics between the Cuban V213s and comparable U.S. plants are noted. Relative strengths and risks are discussed. The study was based upon limited information; the inferences must be viewed as tentative.

TABLE OF CONTENTS

TABLE OF CONTENTS (Continued)

LIST OF FIGURES

LIST OF TABLES

EXECUTIVE SUMMARY

Two Soviet-designed pressurized water reactors, VVER-440 model V213, are currently being constructed near the city of Cienfuegos on Cuba's southern shore about 290 km (180 mi) south of Key West, Florida, with estimated completion dates in the early 1990s. Because of their proximity to the U.S. and the potential risk to which U.S. citizens may be exposed, this limited study examines the containment design and plant safety features of those power plants. Similarities and differences in safety characteristics between the Cuban V213s and comparable U.S. plants are noted. Relative strengths and risks are discussed.

Data for this study were obtained through a limited survey of the available and open literature. Throughout this review, the focus was upon identification of any significant design features of the Cuban V213s that may have substantial safety significance. Where data specific to the Cuban reactors were unavailable, the Cuban V213 design has been inferred from data on similar VVER-440s. To a limited extent, information relevant to the safety characteristics of other VVER types, some of which have been constructed in close proximity to Western Europe, is also presented.

The study was based upon limited information; the inferences must be viewed as tentative.

As in U.S. pressurized water reactors (PWRs), the VVER makes use of water as its moderator and reactor core coolant and is designed with negative power and temperature reactivity coefficients during most of the core life. The design and safety features of the Cuban V213s are compared to a U.S. PWR of approximately similar size and power level (the Haddam Neck plant, which is an 1857-MWt, 590-MWe four-loop Westinghouse plant). Furthermore, the pressure suppression mechanisms of the Cuban V213 bubbler-condenser containment system are compared to those of both U.S. boiling water reactors (BWRs) and PWRs.

The Cuban V213s, which are the standardized VVER-440 models currently being offered for export sale by the USSR, will be housed in reinforced concrete domed containments with carbon steel liners, not unlike U.S. structures. The Cuban V213 containment building is designed to contain accidents generating pressures as high as 0.22 MPa (32 psig), which are the levels expected to accompany the double-ended guillotine break of a 50 cm (20 in) main coolant line, i.e., a large-break loss-of-coolant accident (LOCA) within the 60,000 m^3 (2.1×10^6 ft^3) containment boundary. As with U.S. water-pool or ice-condenser pressure suppression designs, the design pressure-volume combination depends on the functioning of the pressure suppression system for

its adequacy. For comparison, the Haddam Neck plant, which does not employ pressure suppression, has a containment free volume of 60,000 m^3 (2.1×10^6 ft^3) and is designed to contain the 40-psig pressure associated with a large-break LOCA.

A bubbler-condenser pressure suppression system, intended to mitigate the effects of a large-break LOCA, functions similarly to the BWR suppression pool and is physically located in the containment building as in a Westinghouse ice-condenser system. This pressure suppression system is composed of towers containing trays of water that serve as suppression pools and expansion volumes connected to each such tray. Steam is convected from the region around the reactor primary system to below the surface of the water in the trays, and as the steam bubbles upward through the water it is condensed and gases are released into the expansion volumes. Noncondensed steam and other gases are then vented from the expansion volumes to the dome of the containment building.

The Cuban V213s incorporate three independent 100% capacity emergency core cooling system (ECCS) trains, each having its own high- and low-pressure pumps and accumulators. Each train includes an emergency diesel generator seismically qualified and especially designed for the humid Cuban climate. The ECCS is designed to limit zirconium-alloy fuel cladding temperature to less than 1200°C (2192°F). U.S. ECCSs are designed to a similar limit for Zircaloy cladding. The effects of the ECCS and the bubbler-condenser towers are supplemented by spray systems in the accident localization volumes around the steam generators and primary coolant piping. After exhaustion of its initial water supply, the Cuban V213 ECCS draws spent spray water from the containment sumps.

The Cuban V213 design incorporates an auxiliary feedwater (AFW) system having three 100% capacity redundant systems with electrically driven pumps. U.S. PWRs have at least one steam turbine-driven AFW pump and one motor-driven AFW pump.

There are many generic design similarities between the Cuban V213s and U.S. PWRs and, in some cases, BWRs, including the following:

(1) The Cuban reactors, like U.S. plants, use lightly enriched uranium oxide fuel pellets in metal-clad pins. The cladding is a zirconium alloy, as in almost all U.S. plants.
(2) All of the PWRs employ vertical top-mounted control rods and soluble boron for reactivity control.
(3) All are housed in stainless-steel-clad pressure vessels.
(4) All of the PWRs use an indirect steam cycle to remove heat and generate power.
(5) Both the Cuban V213s and U.S. BWRs rely upon the pressure suppression pool concept to control pressure released during accident conditions. While most U.S. PWRs use dry containments, some have ice-condenser pressure suppression containments.

There are also several basic generic design differences. These include the following:

(1) The Cuban V213s have six coolant loops, whereas U.S. PWRs have from two to four, depending on the power level and reactor manufacturer.
(2) The Cuban V213s have horizontal U-tube steam generators with a very large secondary-side inventory. All U.S. PWR steam generators have vertical tubes and a secondary-side inventory (for U-tube steam generators) roughly one-fourth of that of the Cuban V213s.
(3) The Cuban V213 fuel assemblies contain fuel rods arranged on a triangular pitch, enclosed in a hexagonal can. U.S. PWRs have square, open-lattice fuel assemblies. U.S. BWRs have square cans.
(4) The Cuban V213s use two 220 MWe steam turbine-generators; U.S. PWRs have a single turbine-generator.

The results of this study indicate that the Cuban V213s and a comparable U.S. PWR are designed to accommodate accidents of similar degrees of severity. This study has identified several design differences between the Cuban V213s and the typical U.S. PWR that would be expected to lead to substantially different risk assessment results. Notable differences include the following:

(1) The lower vessel head has no instrument penetrations, whereas most U.S. plants have many such penetrations in the lower vessel head. The presence or absence of penetrations might affect the manner of reactor bottom failure in the event of a severe accident. The nature and significance of such possible differences have not been analyzed.
(2) The bubbler-condenser towers are used to control containment pressure. Gases leaving the bubbler-condensers are relieved to the dome. This would be expected to lead to a different time-dependent pressure and fission product distribution history.
(3) There are rooms beneath the floor of the reactor shaft (which contains the reactor vessel) that appear to be outside the pressure containment boundary and to present direct paths for atmospheric release in the event of failure of the bottom of the reactor shaft.

The ability of the Cuban V213 containment to withstand various accident scenarios depends strongly upon the performance of the bubbler-condenser towers and dome system in response to scenarios that generate steam and fission product sources from the reactor vessel and from corium/water interactions. Bukrinskij et al. computed the resultant pressures to be expected from a large-break LOCA at a Cuban V213. These computations indicate that the containment pressure remains below the design pressure as do such computations for U.S. PWRs. The pressure responses for a core-damage accident in a Cuban V213 have not been computed. The comparative degree to which this containment design would be successful in containing a degraded core accident is uncertain: its estimation would depend on analysis of all potential failure modes.

It has been reported that earlier VVER-440s are susceptible to reactor vessel embrittlement because of the high copper content of the steel and the high neutron fluence at the vessel wall, which can lead to a pressurized-thermal-shock (PTS) problem. Although the V213 vessel is constructed with circumferential welds and these are located at axial positions above and below

the active core, these welds are still in regions of relatively high fluence. The operators of VVERs in Finland, Czechoslovakia, and Bulgaria have taken steps to reduce the neutron fluence at the vessel walls by replacing the outer ring of fuel assemblies with dummy elements. No information was found with respect to the core design or the vessel materials of the Cuban V213s.

The V213s located at Loviisa in Finland are the only other VVER-440s to incorporate a domed containment. The Loviisa VVERs also incorporate the Westinghouse ice-condenser system. As the result of extensive independent analyses, the Finnish authorities installed a hydrogen igniter system in Loviisa in 1982. In addition, Finnish studies indicate that severe accident sequences caused by total station blackout result in loss of recirculation due to the containment sump clogging. This condition cannot be mitigated with existing systems. No studies are available to indicate whether the conclusions reached by the Finns are applicable to the Cuban reactors. However, the Cuban V213s incorporate three full-capacity, automatic-start diesel generators intended to prevent station blackout upon loss of offsite power. The Cuban plants include three storage batteries for continuous power supply and a backup battery as a standby power source for reactor control and protection system electric drives. U.S. PWRs have at least two diesel generators and two or more station battery backup power systems.

Finally, the secondary-side inventory of the Cuban V213 steam generators is approximately four times that of a comparable U.S. PWR (it is unclear whether the reference information on Cuban V213s includes fluid inside the primary side of the steam generator), giving the operator of a Cuban V213 significantly more time to respond to certain transients, but potentially aggravating pressurized-thermal-shock problems. The Cuban V213 steam generator has a very large manifold inside the steam generator onto which the steam generator tubes are welded. This introduces the possibility that the manifold could fail, opening a primary-to-secondary side leak which is orders of magnitude greater than a typical steam generator tube rupture event in a typical U.S. PWR. In addition, it is possible that, because of the large secondary-side inventory, a limiting pressurization challenge to containment may be the rupture of a main steam line if the piping configuration (details not available) permits the inventory of more than one steam generator to be released.

In addition to the information presented on the Cuban V213s, limited discussions on other VVER designs are included in this report.

CHAPTER 1. INTRODUCTION

1.1 Background

The accident at Unit 4 of the nuclear power station at Chernobyl on April 26, 1986, has heightened interest regarding the safety of the various types of Soviet-designed reactors, especially those that are located near either the United States or Western European countries.

This report focuses upon the two Soviet-designed VVER-440s that are under construction near the city of Cienfuegos on Cuba's southern shore about 290 km (180 mi) south of Key West, Florida. VVERs are pressurized water reactors (PWRs) which are in many ways similar to U.S.-designed PWRs and are very different in design from the RBMK units such as those at Chernobyl in the Soviet Union.

Construction of the first of the two Cuban VVER-440s was commenced in 1983 and of the second unit in 1985 [1], and completion is now estimated to occur in the early 1990s. [2,3] These two Cuban reactor plants will be housed in steel-lined, reinforced concrete containments utilizing bubbler-condenser pressure suppression systems. The safety aspects of these plants are of interest because of their proximity to the United States and the potential risk to which U.S. citizens may be exposed from a radiation release in case of a severe accident.

1.2 Objective

This study examines the design features of the Cuban VVER plants, with particular attention to containment design and plant safety features. Understanding the expected impact of any particular design feature upon the risk posed to the public is best accomplished by comparison of the Cuban VVER features with those of corresponding Western PWR systems. The pressure suppression mechanisms of the Cuban V213 bubbler-condenser containment system and the overall containment design are compared to those of both U.S. boiling water reactors (BWRs) and PWRs. Similarities and differences in safety characteristics between the Cuban V213s and comparable U.S. plants are noted. Relative strengths and risks are discussed.

While the Cuban plants are of primary interest, other VVERs are also addressed.

1.3 Scope and Format of Review

Data for this report were obtained through review of relevant literature, including an extensive U.S. Department of Energy (DOE) report [4], Russian and Finnish papers, International Atomic Energy Agency (IAEA) reports, and other openly available documents. To the extent possible, data were gathered on the design details of the VVER-440s being built in Cuba, focusing in particular upon the containment designs and the plant safety features. However, since very limited data were available on the Cuban reactors in such literature, information provided in the trip reports written by the USNRC and DOE staff was heavily relied upon. In addition, in many instances this assessment of the Cuban reactors necessitated inferring certain similarities between the Cuban VVERs and other VVERs. Assumptions and data unavailability are noted where pertinent throughout this report.

This study was based on limited information; the inferences must be viewed as tentative.

Because the objective of this review was to identify significant design differences that would impact safety, minor differences were not discussed in this report. Furthermore, since there is a wide spectrum in the design features of the various U.S. PWR systems, and since no single plant is similar to a VVER-440 type reactor, the Cuban VVERs are compared to the reactor and containment design features of the Haddam Neck (1857 MWt, 490 MWe) plant, which is a four-loop Westinghouse plant. Haddam Neck was selected for comparison because it is of approximately the same physical size and power level as the Cuban VVER-440 and because there have been extensive risk analyses performed for the Haddam Neck plant as part of the Integrated Safety Assessment Program. In addition, whenever appropriate, comparison of pressure suppression mechanisms was made to the containment designs of U.S. BWRs and ice-condenser PWRs.

For the purposes of this report the VVER nuclear power plants are divided into five groups; four VVER-440 types and one VVER-1000. Because of the particular interest in the Cuban reactors, the Cuban VVER-440s are addressed first in the discussion of each major feature; key distinctive features of other VVER reactors are presented thereafter.

The format of this report is as follows:

1. Title of design feature.
2. U.S. Plant Feature Description (a description of the design feature in U.S. PWR plants, usually as typified by Haddam Neck).
3. Cuban VVER-440 Description (a description of the design features of Cuban VVER-440 as we know it or infer it).
4. Comparative Discussion, including safety significance.
5. Other VVERs. (As appropriate, other VVER designs are described and discussed, focusing on differences from the Cuban VVERs.)

1.4 Organization of Report

Since there are several different VVER designs, a set of designations is presented in Chapter 2. Also included are general design descriptions, an evolution of design changes, and a brief general comparison with a typical U.S. PWR provided as an overview. Chapter 3 is devoted to a detailed discussion of containment design, accident mitigation systems, and design basis accidents for these plants. Discussions of important reactor systems and safety components are presented in Chapter 4, and instrumentation and control systems are outlined in Chapter 5. Operating experience is presented in Chapter 6, and Chapter 7 contains special topics on safety analyses and experimental results.

CHAPTER 2. VVERS: OVERVIEW

2.1 General Background

In the Eastern bloc countries, Finland, and Cuba there are 150 Soviet-designed nuclear power plants in operation, under construction, or planned, together with six Western-designed nuclear power plants. Although the Soviets manufacture several generic types of reactors, the VVER is the primary exported Soviet design. Of the 156 nuclear power plants, 115 are VVERs: 44 are VVER-440s, 69 are VVER-1000s, and there is one VVER-210 and one VVER-365. The remaining 41 nuclear power plants are of various designs, as follows: two BWRs in Finland; one 70 MWe VVER in East Germany; and one BWR, three liquid metal fast breeder reactors (LMFBRs) and 28 light-water-cooled, graphite-moderated reactors (RBMKs) (excluding Chernobyl Unit 4) in the USSR; as well as five Canadian-designed CANDUs in Romania and one Westinghouse PWR in Yugoslavia [4,5]. Table 2.1 shows the distribution of these reactors [4]. Appendix A lists the current plants and discusses the historical background.

The RBMK design differs extensively from the VVER design. The facts and implications of the RBMK design are analyzed and reported in NUREG-1250 and NUREG-1251 issued by the U.S. NRC and are not discussed in this report.

The Russian designation "VVER" can be translated as "water-water energy reactor" [6], meaning that it is a light-water-moderated and light-water-cooled power generating reactor; the numerical part of the name designates the electrical capacity in megawatts.

VVERs, and particularly the Cuban V213s, have many design features in common with U.S. PWR designs. However, there are several significant differences which could lead to a behavior that is quite different from that of a U.S. PWR in the event of a serious accident. This study focuses upon identification of any such basic design differences between the Cuban VVERs and a typical U.S. PWR and a preliminary assessment of their impact upon the consequences of severe accidents. In addition, comparisons are made to other VVERs as appropriate.

2.2 Designation of VVER Reactor Design Types

In this section, each VVER type is given a designation used throughout this report and its distinguishing design features are presented. More complete discussions of containment designs and accident mitigation systems are provided in Chapter 3 and of reactor and plant safety component designs in Chapter 4.

Table 2.1. Distribution of Nuclear Power Plants in Eastern Bloc Nations, Finland, and Cuba

Country	VVER-440		VVER-1000			Others[a]	Total
	Op.	Const.	Op.	Const.	Plan		
Bulgaria	4			2	4		10
Cuba		2					2
Czechoslovakia	7	5		1	3		16
Finland	2					2[b]	4
East Germany	4	4			2	1[c]	11
Hungary	3	1			2		6
Poland		2			2		4
Romania						5[d]	5
USSR	10		12	25	16	34[e]	97
Yugoslavia						1	1
Total	30	14	12	28	29	43	156

a Data are taken from the American Nuclear Society publication, Nuclear News, August 1987, Vol.30/No.10, "World List of Nuclear Power Plants," and Reference [4].

b Two BWR plants, TVO-1 and TVO-2, are located in Olkiluoto.

c A 70 MWe PWR, Rheinsberg 1, is located in Rheinsberg.

d Five CANDU plants are under construction in Cernavoda.

e Of the 34 nuclear power plants of other designs in USSR, two are predecessors of current VVERs (one is the first commercial PWR, VVER-210, and a second prototype, VVER-365) located in Novovoronezh, 28 are light-water-cooled, graphite-moderated reactors, three are LMFBRs, and one is a BWR.

There are five types of VVER designs reviewed in this report;

(1) VVER-440 V213s being built in Cuba

The current standard VVER-440 design being offered for export by the Soviet Atomenergoexport organization begins with the Cuban installations. This design includes a containment system and an emergency core cooling system that are designed to accommodate a loss-of-coolant accident involving an instantaneous break of a large primary system line. The containment includes a bubbler-condenser pressure suppression system and a dome on the upper portion of the basic V213 steel-lined reinforced concrete pressure containment building. Accompanying the addition of the pressure dome was a significant reduction in the size of the bubbler-condenser system, as compared with the earlier, domeless, European V213s.

This will be referred to as the Cuban V213 type.

(2) VVER-440 V213 with bubbler-condenser towers but no dome

After the Loviisa type reactors were built in Finland, safety aspects of the earlier VVER-440 V230 design were modified, and the new model was designated as V213. The major design changes from the prior V230 models included an order of magnitude increase in the volume of the pressure retention boundary and implementation of an emergency core cooling system and a bubbler-condenser pressure suppression system in the containment. The pressure boundary includes the bubbler-condenser towers and accident localization volumes but does not include the portion of the containment building above the reactor head. All V213s operating or currently under construction in Eastern Europe fall into this category. The four units at Paks in Hungary are examples of this type. This design has been succeeded by the Cuban V213.

This will be referred to as the European V213 type.

(3) VVER-440 V213, Loviisa type

The Loviisa plants in Finland began as V230s. Numerous modifications, including extensive efforts to cause the safety of the Loviisa plants to meet the level of standards ordinarily imposed by the U.S. NRC, were made to the basic V230 design, which became the basis for the V213 type reactors. These plants differ significantly from all other V213s in that they are designed with Westinghouse ice-condensers. They are housed in a pressure dome containment. The plant owners also exercised tight inspection and control of parts during various phases of construction (see also Figure B.2). [7] Since these reactors represent exceptions to

the generic VVER, discussion of Loviisa plants is minimized and presented only when necessary to make an important point. A detailed description of the Loviisa containment is provided in Appendix B.

This will be referred to as the Loviisa type.

(4) VVER-440 V230

This is the original VVER-440. It differs from the V213 series primarily in that it has no substantial pressure containment and no emergency core cooling system. An accident localization system can accommodate a small-break loss-of-coolant accident (equivalent to an approximately 4-inch line break). The pressure (and fission product) retention boundary is the interconnected series of local compartments in which the various components of the plant are located; it does not extend to the reactor building. There are valves and rupture discs that open to the atmosphere if the pressure inside the pressure boundary exceeds its retention limits. Makeup coolant pumps provide a limited emergency cooling capability. This type of VVER-440 is no longer being built. Examples of this design are the first four units at Kozloduy in Bulgaria.

This will be referred to in this report as the V230 type.

(5) VVER-1000

The VVER-1000 units at South Ukraine in the USSR are selected as the representative plants for discussion in this report, although there are variants. The VVER-1000 plants are four-loop PWRs, with containments similar to U.S. large dry containments. The domed cylindrical containment shell is steel-lined reinforced concrete. No bubbler-condenser or other pressure suppression device is employed.

This will be referred to in this report as the VVER-1000 type.

In addition to these five designations, three more conventions are used in this report. The entire class of V213s, which includes the Cuban and European as well as the Loviisa V213s, is referred to as "V213." Similarly, the entire class of VVER-440s, which include V230s and V213s, is referred to as "VVER-440," and all the VVER-440s and VVER-1000s are referred to as "VVER."

2.3 General Design Descriptions and Evolution of Changes in VVER Designs

Basic design characteristics of VVER-440s and VVER-1000s are summarized in Table 2.2 [4].

Table 2.2. Basic Design Characteristics of V213 and VVER-1000

ITEM	VVER-440 V213	VVER-1000
OVERALL		
Thermal capacity	1375 MWt	3000 MWt
Electrical capacity	2 x 220 MWe	2 x 500 MWe (1 x 1000 MWe) K-500-60/3000,K-1000-60/1500
Efficiency (gross)	31.3%	33.7%
Coolant pressure in primary circuit at exit from reactor	12.4 MPa (1775 psi)	15.4 MPa (2277 psi)
Coolant temperature at inlet	268°C (514°F)	289°C (552°F)
Coolant temperature at exit from reactor	301°C (574°F)	322°C (612°F)
Coolant flow rate through reactors	42,000 m^3h	80,000 m^3h
Pressure before turbine	4.4 MPa (638 psi)	6.0 MPa (870 psi)
Temperature before turbine	256°C (493°F)	276°C (529°F)
REACTOR		
Vessel height	11.8 m (38.7 ft)	10.88 m (35.7 ft)
Maximum diameter	4.27 m (14 ft)	5.535 m (18.2 ft)
Inner diameter	3.56 m (11.7 ft)	4.07 m (13.4 ft)
Weight	201 tonnes (4.43×10^5 lb)	304 tonnes (6.70×10^5 lb)
Thickness of cylindrical part	0.140 m (5.51 in)	0.190 m (7.48 in)
Thickness of nozzle nose	0.200 m (7.87 in)	0.265 m (10.5 in)
Number of openings for inlet and outlet nozzle	2 x 6	2 x 4
CORE		
Height of core	2.5 m (8.2 ft)	3.56 m (11.7 ft)
Equivalent diameter	2.88 m (9.5 ft)	3.12 m (10.2 ft)
Number of fuel assemblies	349	151
Configuration of assemblies	Hexagonal	Hexagonal
Size across flats	144 mm (5.67 in)	238 mm (9.48 in)
Fuel assembly spacing in core	147 mm (5.79 in)	241 mm (9.49 in)
Number of control rods	37	109
Number of fuel elements in assembly	126	317

Table 2.2. Basic Design Characteristics of V213 and VVER-1000 (Continued)

ITEM	VVER-440 V213	VVER-1000
CORE (Continued)		
Diameter of fuel element	9.1 mm (0.358 in)	9.1 mm (0.358 in)
Area of heat transfer surface	3150 m^2 (33,906 ft^2)	4850 m^2 (52,205 ft^2)
Mean specific heat flux	380 kW/m^2 (1.5 x 10^5 Btu/h*ft^2)	550 kW/m^2 (1.75 x 10^5 Btu/h*ft^2)
Number of auxiliary absorbing elements	-----	12
Height of fuel assembly	3.21 m (10.53 ft)	4.67 m (15.32 ft)
Average core power	83 kW/liter	111 kW/liter
Average power density in fuel	33 kW/kg of Uranium	45.5 kW/kg of Uranium
Core loading	42 metric tonnes of Uranium	66 metric tonnes of Uranium
Fuel enrichment	2.4 - 3.6% U_{235}	3.0 - 4.4%* U_{235}
Amount of core changed annually	1/3	1/3
Average full power hours between refueling	7000	7000
Average burnup	28,000 MWd/t of Uranium	26,500 MWd/t of Uranium
Maximum burnup	42,000 MWd/t of Uranium	44,000 Mwd/t of Uranium
Reactivity control	Boric Acid	Boric Acid
STEAM GENERATOR		
Thermal power	229.2 MW	750 MW
Steam output	451.8 tonne/h (1 x 10^6 lb/h)	1469 tonne/h (3.2 x 10^6 lb/h)
Pressure of generated steam	4.6 MPa (667 psi)	6.48 MPa (940 psia)
Steam temperature		
at outlet	258.9°C (498°F)	278.5°C (533°F)
at inlet	226°C (439°F)	220°C (428°F)
Primary circuit working pressure	12.3 MPa (1784 lb/in^2)	15.7 MPa (2277 lb/in^2)
Heat exchange surface	2510 m^2 (2.7 x 10^4 ft^2)	5040 m^2 (5.4 x 10^4 ft^2)
Primary coolant flow rate	4842 (tonne/h) (10.7 x 10^6 lb/h)	14,400 (tonne/h) (31.7 x 10^6 lb/h)
Primary coolant temperature		
at inlet to generator	301°C (573°F)	322°C (612°F)
at outlet from generator	268°C (514°F)	290°C (554°F)
Log mean temperature difference	22.3°C (40.1°F)	23.2°C (41.8°F)

* Other options possible

Table 2.2. Basic Design Characteristics of V213 and VVER-1000 (Continued)

ITEM	VVER-440 V213	VVER-1000
STEAM GENERATOR (Continued)		
Heat transfer coefficient	4850 (m^2 x K) (854 Btu/h-ft^2-°F)	7730 (m^2 x K) (1361 Btu/h-ft^2-°F)
Mean heat flux	108 KW/m^2 (3.4 x 10^4 Btu/h-ft^2)	184 KW/m^2 (5.8 x 10^4 Btu/h-ft^2)
Number of coolant tubes	5536	15648
Diameter and wall thickness of tubes	16 x 1.4 mm (0.630 x 0.055 in)	12 x 1.2 mm (0.427 x 0.047 in)
Average tube length	9 m (29.5 ft)	8.5 m (27.8 ft)
Total length of tubes	49,760 m (163,255 ft)	133,760 m (438,845 ft)
Weight of tubes	25.89 tonnes (57,026 lb)	43.1 tonnes (94,933 lb)
Primary side pressure drop	0.065 MPa (9.4 psi)	0.135 MPa (19.6 psi)
Inside diameter of shell	320 mm (126 in)	4000 mm (157.5 in)
Inner diameter where tubes flare out	800 mm (31.5 in)	834 mm (32.8 in)
Thickness of wall at this point	136 mm (5.35 in)	168 mm (6.61 in)
Number rows of openings for flaring out of tubes (in terms of height)	76	123
Spacing between rows	24 mm (0.945 in)	18 mm (0.709 in)
Spacing between openings in a row	23 mm (0.906 in)	17 mm (0.669 in)
Number of separator sections in a single row	24	11
Number of rows	2	8
Width of section	382 mm (15.0 in)	960 mm (37.8 in)
Length of section	920 mm (36.2 in)	500 mm (19.69 in)
Diameter of pipelines		
Primary inlet and outlet	500 mm (19.7 in)	850 mm (33.5 in)
Secondary inlet	250 mm (9.8 in)	375 mm (14.8 in)
Secondary outlet	400 mm (15.7 in)	500 mm (19.7 in)
Thermal output of unit volume of heat transfer surface of steam generator	6.4 MWe/m^2 (2 x 10^6 Btu/h-ft^2)	17.3 MWe/m^2 (5.5 x 10^6 Btu/h-ft^2)
Mean rate of output of steam from evaporation surface	2.37 m/s (7.78 ft/s)	4.9 m/s (16 ft/s)
Velocity of steam in inlet of baffle separator	0.323 m/s (1 ft/s)	0.38 m/s (1.25 ft/s)
Calculated moisture content of steam in steam generator	0.02 tonnes/h (9,912 lb/h)	0.05 tonnes/h (16,000 lb/h)
Steam generator blowdown	4.5 tonnes/h	7.3 tonnes/h

Table 2.2. Basic Design Characteristics of V213 and VVER-1000 (Continued)

ITEM	VVER-440 V213	VVER-1000
PRESSURIZER		
Volume:		
Total	38 - 44 m^3 (1,340 m^3-1,553 ft^3)	79 m^3 (2,789 ft^3)
Steam	16-18 m^3 (565-634 ft^3)	24 m^3 (847 ft^3)
Temperature	327°C (621°F)	346°C (665°F)
Pressure	124 bars (1,798 psi)	150 bars (2,175 psi)
Heaters:		
Number	360	28
Power	1620 KW	2520 KW
SAFETY VALVES		
First opening pressure	147 bars (2,132 psi)	185 bars (2,683 psi)
Closing pressure	129 bars (1,871 psi)	?
Capacity	?	?
Second opening pressure	150 bars (2,176 psi)	190 bars (2,756 psi)
Closing pressure	129 bars (1,871 psi)	?
Capacity	?	?
Third opening pressure	150 bars (2,176 psi)	190 bars (2,756 psi)
Closing pressure	?	?
Capacity	?	?
Inner diameter	2.4 m (7.87 ft)	3.0 m (9.84 ft)
Height without support	10.8 m (35.43 ft)	13.66 m (44.8 ft)
Weight empty	112.8 tonnes (248,000 lb)	212 pounds (467,000 lb)
BUBBLER (OVERFLOW TANK)		
Total volume	15.0 m^3 (530 ft^3)	N/A
Water volume	11.25 m^3 (397 ft^3)	N/A
Diaphragm pressure	5.0 bars (72.5 psi)	N/A

Table 2.2. Basic Design Characteristics of V213 and VVER-1000 (Continued)

ITEM	VVER-440 V213	VVER-1000
PRIMARY COOLANT PUMPS		
Designation	GTsN-310/GTsN-317	GTsN-195
Pump capacity	6500/7100 (m^3/h)	20,000 (m^3/h)
	28,600/31,240 (gal/m)	88,000 (gal/m)
Coolant temperature	270/270°C (518°F)	300°C (572°F)
Suction pressure	12.5/12.5 MPa	15.6 MPa
	(1,813 psi)	(2,263 psi)
Pressure rise	0.52/0.4 MPa	0.2 MPa
Design pressure	14/14 MPa	18.0 MPa
	(2030 psi)	(2,611 psi)
Design temperature	335/350°C (635°F)	350°C (662°F)
Power consumption:		
Nominal	1,200/1,400 KW	5300 KW
Cold water (20-60°C)	?/1,600 KW	7000 KW
Rated voltage (50 Hz)	6000/6000 volts	6000 volts
Speed	1500/1500 rpm	1000 rpm
Flywheel	No/Yes	yes
Efficiency	.52/.76	.74
Weight	48/42 tonnes (106,000 lb)	156 tonnes (345,000 lb)

2.3.1 General Design Description

All VVER-440s have six primary coolant loops with isolation valves in the hot and cold legs of each loop, horizontal U-tube steam generators, hexagonal fuel assemblies containing 126 fuel rods in a can similar to that of a U.S. BWR, and rack and pinion type control rod drives and use two 220 MWe steam turbines, as shown in Figures 2.1 and 2.2 (except at Zarnowiec units in Poland where there will be only one 465 MWe turbine per unit [4]). Each turbine is fed by three steam generators. The VVER-1000s, on the other hand, have four loops without isolation valves, four horizontal U-tube steam generators, and one 1000 MWe steam turbine or two 500 MWe turbines.

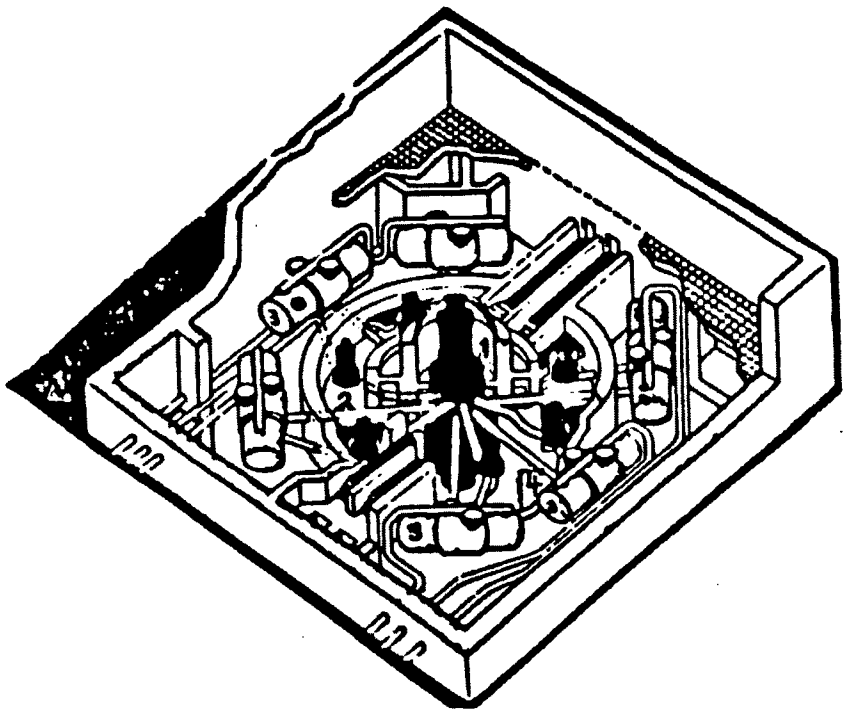

Primary Circuit
1. Reactor
2. Reactor Coolant Pump
3. Steam Generator
4. Primary coolant loop

Figure 2.1. VVER-440 Primary Circuit Layout

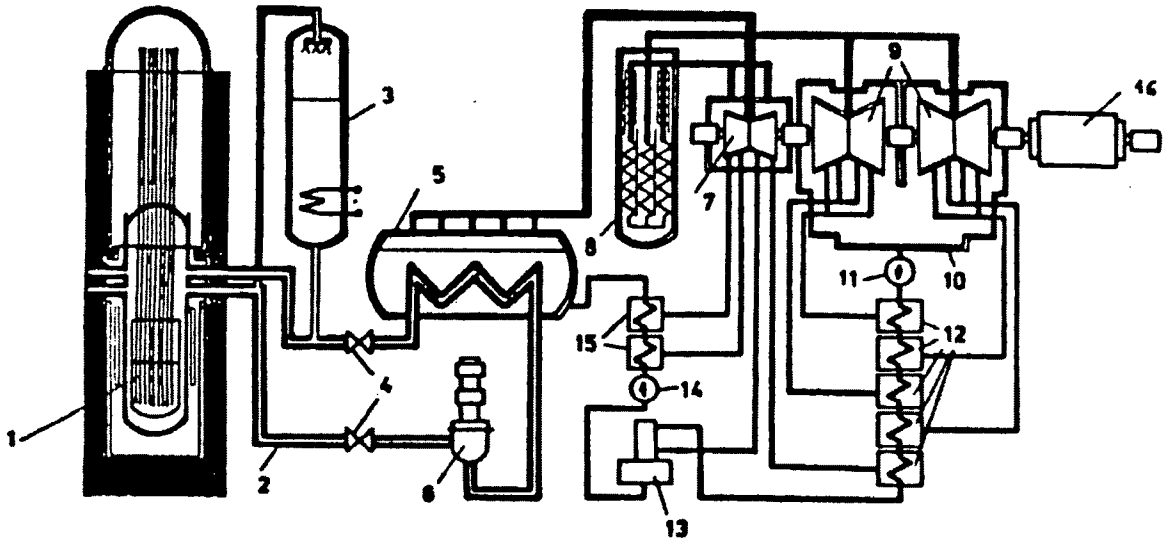

1-Reactor; 2-Reactor coolant pipe; 3-Pressurizer; 4-Loop isolation valve; 5-Steam generator; 6-Reactor coolant pump; 7-Turbine; 8-Separator; 9-Turbine; 10-Condenser; 11-Condensate pump; 12-Low-pressure pre-heater; 13-Degasser; 14-Feedwater pump; 15-High-pressure pre-heater; 16-Generator.

Figure 2.2. VVER-440 Flow Scheme

VVER-1000s use a newer pump which is designed to deliver 19,000 m^3 (671,000 ft^3) of water per hour (compared to 6,500 m^3 (230,000 ft^3) of water per hour for the V213 pumps) permitting the number of circulation loops to be reduced to four from six even though power was increased by a factor of 2.3. [6]

2.3.2 Evolution of Design Changes

Containment and Safety Systems

Detailed discussions of the containment and safety systems are presented in Chapters 3 and 4 of this report.

Vessel Embrittlement

V213s have a potential problem that results from copper and phosphorus impurities in the metal of the reactor pressure vessel causing the material to become embrittled faster than expected, with an accompanying loss of ductility at low temperatures. This problem was discovered by the Finns at

the time of discovery of tne pressurized-thermal-shock (PTS) problem in certain U.S. reactors [8,9,10]. The effect of this is that the operating temperature must be kept above this threshold temperature by a sufficient margin to prevent the possibility that the lack of ductility will cause the vessel to fail when subject to stress. One solution to the embrittlement problem would be to insert shielding between the core and the vessel, but the relatively small diameter of the VVER reactor pressure vessel did not allow the insertion of additional materials to reduce the neutron fluence at the reactor vessel wall. Therefore, embrittlement was a concern in both the weld metal and base metal. As a result of this concern, 36 fuel elements in the outer row of the Loviisa plants in Finland were replaced with special shield assemblies that were expected to reduce the fluence at the reactor vessel wall by an estimated factor of three [8,9,10]. Similar measures were taken in Czechoslovakia, where 36 outer assemblies were replaced by steel dummy assemblies to reduce neutron irradiation embrittlement [11], and at Kozloduy in Bulgaria, where 10% of the fuel assemblies were replaced with shields by revising core loading resulting in vessel fluence reduction by a factor of four, accompanying a 10% increase in power density necessary to maintain the same total power [12].

Water Chemistry

The first 10 VVERs did not use cladding on the inside of the reactor pressure vessel. Although no significant corrosion or other problems were reported with the use of ammonia-potassium water chemistry control, the Loviisa Unit 1 and subsequent VVERs (models V213s and VVER-1000s) use stainless steel cladding on the inside of the reactor pressure vessel. This is reported to have simplified problems associated with maintaining the correct water chemistry [4].

Fuel Rod Design

The fuel rods have been changed to improve performance, increasing the power density of the core by reducing the diameter of the fuel rod from 10.2 mm (0.4 in) to 9.2 mm (0.36 in), to decrease the linear heat rate and decrease central temperature. Only the first two VVERs used the larger diameter rods. [4]

Reactivity Control

The first two VVERs (the 70 MWe unit at Rheinsberg in East Germany and the 210 MWe Novovoronezh Unit 1 in USSR) used only control rods to compensate for excess reactivity. In subsequent units, boric acid was added to the primary system to assist the control rods in reactivity control. The use of boric acid has allowed the number of control rods in the VVER-440s to be reduced from 73 to 37. [4]

Reactor Coolant System Components: Pressurizer; Isolation Valves; Reactor Coolant Pumps

These first two VVERs (smaller versions of 440s) used nitrogen cover gas in the pressurizer. All subsequent VVER-440s use steam. [4]

It is reported that primary coolant isolation valves (which isolate each individual steam generator and portions of the primary coolant piping to and from that steam generator) used on the first two VVERs had a rapid closing feature not employed on later VVER-440s. Such isolation valves for each primary coolant loop were reported to be used in the first VVER-1000s in the expectation that they would increase plant availability and allow maintenance to be done while the plant was operating. This apparently did not prove to be the case, so loop isolation valves are no longer included in the VVER-1000 design, although they have been retained on the V213s. [4]

The VVER-440s and earlier VVERs used low-inertia pumps having poor coastdown performance. To provide continuing pumping in the event of loss of electric power, later units have special generators located on the turbine generator shafts to provide electric power for approximately 100 seconds. All of the VVER-1000s and the V213s use shaft seal pumps with a special flywheel to provide the desired flow coastdown [4]. These features tend to reduce the potential for departure from nucleate boiling (DNB) and challenge to fuel integrity in loss of forced flow transients.

Flow-Induced Vibration

Vibration problems in 1969 caused the thermal shield in the reactor vessel of Novovoronezh Unit 1 (a V210) to move. A series of modifications (no details are available) were made to resolve this problem. Starting with Armenia Unit 1 (a V230), a perforated flow distribution plate was installed in the lower inlet region of the core [4].

Seismic Problems

Before a major earthquake in March 1977 affected the V230s at the Kozloduy Nuclear Power Station in Bulgaria, the VVER design did not include any provision for earthquakes. This earthquake caused the steam generators at Kozloduy to move about 12 cm (5 in). Following this earthquake, devices that would shut down the reactor in case of an earthquake were added to VVER designs for applications in regions of high seismicity. All Bulgarian plants now have enhanced seismic designs. The first set of units at Kozloduy have been stabilized with snubbers to protect long pipe runs. Only the steam generators were stabilized on the VVER-1000 because pipe runs are not as long. In addition, all of the Bulgarian plants have seismic scram, set at about one-tenth of the design basis earthquake [4]. Numerous structural changes were made to make Armenia Unit 2 better able to accommodate the loadings resulting from an earthquake. Some of these changes (no details are available) were reported to have been backfitted onto Armenia Unit 1 [4].

In the new plant designs, changes were made to incorporate equipment supports and seismic snubbers. The VVER-1000 design is still being upgraded to improve its seismic capability [4].

Backfitting

Since the first VVER-440 was built, the basic VVER design has undergone changes in engineering and the addition of safety-related features and

equipment as discussed above [4]. Although there has been selective retrofitting, such as was described above with respect to embrittlement and seismic issues, there has been no report to indicate that there was general retrofitting of the older plants with modifications, even when such design modifications might be deemed necessary or prudent to enhance plant safety. However, it is reported that the Soviets are considering plans for the West German company Kraftwerk Union AG (KWU) to backfit the V230s in the USSR with bubbler-condenser towers to alleviate reactor containment overpressure in the event of an accident [13].

2.3.3 Major Design Differences and Similarities Between the Cuban VVERs and a U.S. PWR

Table 2.3 lists certain major design characteristics of a VVER-440 and a Westinghouse four-loop PWR of comparable size, the Haddam Neck nuclear power plant.

Major similarities between Haddam Neck and VVER-440s include the fact that both use lightly enriched uranium oxide fuel, vertical control rods containing neutron-absorbing materials and soluble boron to control reactivity, contained inside a stainless-steel-clad carbon steel pressure vessel. The fuel of VVERs is clad in zirconium alloy, as is the fuel of most U.S. PWRs, but Haddam Neck uses stainless steel cladding. All U.S. and Western PWRs have large substantial pressure containments, capable of accommodating a large-break loss-of-coolant accident, as do the VVER-440s in Cuba and Finland. The V213s, like U.S. PWRs, have emergency core cooling systems.

However, there are also significant differences between U.S. PWR and VVER designs, including the following:

(1) VVERs use hexagonal fuel assemblies versus square assemblies in U.S. designs, causing a different packing.
(2) VVER fuel assemblies are individually shrouded in a zirconium alloy can. This is similar to a typical U.S. BWR design. U.S. PWRs use an open lattice of fuel rods.
(3) In the VVER core, some control rods have movable fuel assemblies below the neutron-absorbing section, which necessitates space below the core active section to accommodate the follower fuel when the control rod is fully inserted.
(4) VVER steam generators have horizontal tubes; U.S. PWRs have vertical tubes. The VVER tubes are fully covered during normal operation. The Cuban VVER steam generators have a total secondary-side volume approximately four times (the actual amount is uncertain since the reference material is unclear as to whether the mass given is the secondary or the secondary and primary inventory) that of the corresponding U.S. PWR steam generators.
(5) There are six primary coolant loops in the VVER design compared to two to four loops in U.S. PWR designs.
(6) In all U.S. nuclear power plants, there is only one turbine per reactor. The VVER plants, in most cases, include two turbines, one per three steam generators in VVER-440s.

Table 2.3. Comparison of Key Parameters Between VVER-440s and Comparable U.S. PWR

	VVER-440 Cuban V213[a]	U.S.PWR Haddam Neck [14]
Thermal Power, MWt	1375	1825[b]
Gross Electrical Power, MWe	440	590[b]
Discharge Burnup, GWd/MTU	28/30	22
Uranium in Core, MTU	42	64[c]
Uranium Enrichment, w/o U-235	3.6	3.3
Fraction of Core Refueled	1/3	1/3
Cycle Design Length, h	7000	8200
Active Fuel Height, ft	8.2	9.97
Fuel Central Temperature, °C (°F)	1940 (3524)[d]	2330 (4225)[d]
Primary Loop Coolant Temperature, °C (°F)		
Core Inlet	269 (516)	280 (537)
Core Outlet	300 (572)	307 (584)
Reactor Vessel Dimensions, ft		
Inside Diameter	11.7	12.8
Height	38.7	38.7
Number of Loops	6	4
Primary Flow Through Vessel, gal/min	1.85×10^5	2.57×10^5
Primary Coolant Inventory, lbm	372,000	342,000
Reactor Coolant Pipe Diameter, in	19.7	27.5
Steam Generator Volume, ft^3	3300	3767
Water Mass, lbm per SG	203,000[e]	42,800[f]
Steam Line Diameter, in	15.7	22.1
Containment Free Volume, ft^3	2.0×10^6	2.2×10^6

a Design characteristics presented here are those of a typical European V213 reactor, and it is assumed that they are unchanged in the Cuban design.

b The plant was designed with initial thermal capacity of 1473 MWt to provide 490 MWe of gross electrical power. The capacity of the plant was later increased to permit generation of 1825 MWt and 590 MWe as the nuclear steam supply system proved to have an adequate margin for such operation.

c For initial core loading.

d Ref. 1 did not indicate whether this was peak or average temperature. The Haddam Neck data is for the maximum design UO2 temperature.

e This may include both tube and shell side inventories [15].

f Maximum hot full-power level, including an additional 15% to account for instrument error.

(7) V213s, except Loviisa, have bubbler-condenser containment systems, as compared with large dry or ice condenser systems employed by U.S. PWRs. The older (model V230) VVER-440s have no substantial containment.
(8) The V230s lack emergency core cooling systems.
(9) U.S. PWRs use the primary side for residual heat removal while VVERs use the secondary side of the steam generators for this purpose.

Plant transient behavior and the time available for operator action are strong functions of the relative plant primary and secondary inventory. In this regard, we observe that the secondary-side water mass of each of the six VVER-440 steam generators is much greater than that of Haddam Neck. The VVER primary coolant inventory is slightly larger than a comparable U.S. PWR, principally because there are six loops, despite the fact that the reactor vessel diameter is slightly smaller in the VVER and each primary reactor coolant pipe is significantly smaller in diameter.

The principal impacts of the much larger ratio of secondary-to-primary inventory are the following:

(1) The much larger net secondary-side inventory makes steam pressure and temperature much less sensitive to changes in primary-side conditions.
(2) The VVER plant operator has more time to recover in the event of a loss of feedwater.
(3) The expected plant behavior during the worst-case overcooling transient is undoubtedly different because of the potentially much longer time over which overcooling could occur. This factor is, to a very large degree, offset by the fact that the overcooling is confined to 1/6 of the primary flow instead of 1/4 to 1/2 in a U.S. PWR. The break of a steam line would cause a smaller reduction rate in secondary-side temperature because of the much larger inventory. This would tend to reduce the impact of the overcooling upon the reactivity insertion.
(4) By increasing reactor-vessel cooldown in event of a steam line break, a large secondary inventory could aggravate pressurized-thermal-shock concerns. However, this concern may not apply to newer vessels, such as the Cuban, that may have a material composition not sensitive to fast-neutron embrittlement.
(5) It is possible that a main steam line break inside the accident localization volumes could represent a significant challenge to containment integrity if the inventory of more than one steam generator could be released.

Several other differences in plant behavior should be expected due to the different steam generator geometry:

(1) The fact that the tubes of the VVER steam generator are horizontal eliminates a large portion of the gravitational head that plays an important role in natural circulation behavior of U.S. designs. Natural circulation is relied upon in the VVERs for cooling during

the later stages of plant shutdown. The VVER steam generator elevation was selected to assure such natural circulation [6].

(2) The horizontal orientation of VVER steam generator tubes may also impact the behavior of the plant during small-break loss-of-coolant accidents (LOCAs) by eliminating or substantially reducing the counter-current two-phase flow which is predicted to occur in the hot legs of U.S.-designed PWRs during such accidents.

(3) The smaller primary pipe diameter makes the rate of loss of primary inventory in a large-break LOCA smaller, and therefore the ECCS need not handle quite as large a flow rate.

(4) Because of the very large evaporation surface in the horizontal VVER steam generator, the steam will tend to be of higher quality entering the separators.

(5) Because the VVER steam generators have a large cross-section manifold inside the steam generator onto which the steam generator tubes are welded, there is a possibility for a very large primary-to-secondary leak if the manifold fails. In the event of such a failure, there is a direct path to the atmosphere via the steam dump or relief valves. U.S. PWRs can also vent to the atmosphere via safety relief valves after a tube rupture. However, what would be a relatively benign steam generator tube failure event in a U.S. PWR (which has a tube sheet instead of a manifold) could potentially be a much more serious event for a VVER manifold failure, because of the much larger leak.

CHAPTER 3. CONTAINMENT

The objectives of this chapter are twofold: (1) to describe the containment designs and features that may mitigate the effects of postulated accidents; and (2) to define the design basis accidents for each such containment. Severe accident mitigation efforts focus upon those actions, devices, and systems that have the capability to reduce the consequences to the public of a severe accident after the core has degraded or melted. Since the containment is the final barrier between the fission products and the public, such efforts naturally focus upon containment integrity. Containment integrity can be challenged in three fundamental ways: overpressurization, excessive heating, and thermochemical erosion by contact with molten core materials. Therefore, this chapter focuses upon the devices and systems designed for overpressure control, hydrogen control, and containment heat removal.

Containment performance depends upon its fundamental physical characteristics, such as the containment dimensions, design pressure, construction materials, internal heat sinks, and leakage rate (which are naturally of paramount importance), and the complementary systems needed to maintain containment isolation, heat removal, and combustible gas control. These features are addressed in this chapter.

A brief description of the main features of comparable U.S. containments is given first, followed by a description of those of the Cuban V213s, and then a comparative discussion. As in other chapters, the emphasis is upon the Cuban V213, but a final section adds a brief discussion of the distinguishing features of other VVERs. (Detailed descriptions of other VVERs can be found in Reference 4.)

3.1 U.S. PWR and BWR Containments

3.1.1 General

U.S. nuclear reactor safety philosophy follows the general principle of defense-in-depth in the reactor plant design, licensing, and operation. In this approach the public is protected from radiation release by three levels of barriers: the fuel pin cladding; the reactor vessel; and, in the unlikely event that the vessel fails, the containment. The containment serves as the ultimate barrier in the event of severe accidents, and, accordingly, containment design receives considerable attention. The engineered safety features of U.S. plants are designed to preserve the integrity of the containment under the design basis accident conditions, involving loss of coolant through an instantaneous break of a main primary coolant system pipe.

The containment performance margin for severe accidents that may have features beyond the design basis is uncertain. Potential containment failure modes include (1) overpressurization, which can occur due to steam released from the primary and secondary loops inside containment or can be generated by water contact with core debris, by hydrogen formation and detonation, and by gas evolution caused by attack of the concrete by molten core materials; (2) weakening due to overheating of the structure and the penetration seals, which can occur as a result of the foregoing processes; and (3) physical attack of concrete by molten core debris.

U.S. PWR containment designs are usually categorized by two fundamental mechanisms used to control pressure: (1) size, i.e., the large dry containments, and (2) steam condensation mechanism, i.e., the ice-condenser containments. A total of 62 operating plants are of the dry containment type, including all of the Combustion Engineering (C-E) and Babcock & Wilcox (B&W) plants. Ten Westinghouse high power 4-loop plants have ice-condenser containments, seven medium power 3-loop Westinghouse plants have subatmospheric dry containments, and the remaining Westinghouse plants all have (near-atmospheric) dry containments.

Containments of almost all U.S. BWRs rely upon water pools to suppress steam pressure.

Pressure suppression mechanisms in U.S. containment designs therefore fall in three categories: (1) steam is accommodated and pressure is controlled by use of a large volume into which the gas can expand, together with sprays and/or fan coolers to condense steam and cool gases, i.e., a dry containment; or steam is condensed and pressure is controlled by steam being channeled into either (2) perforated metal baskets containing large amounts of flaked borated ice, i.e., ice-condenser containments, or (3) a very large annular suppression pool, in the case of BWR containments. [16]

The Haddam Neck plant, as discussed below, has a dry containment with a 2.2 x 10^6 ft^3 net volume. [14]

3.1.2 Haddam Neck Siting [14]

The Haddam Neck plant is located on a 525-acre site on the east bank of the Connecticut (CT) River at a point 21 miles (33.8 km) south-southeast of Hartford, CT, and 25 miles (40.2 km) northeast of New Haven, CT. The minimum distance from the reactor containment to the site boundary is 1,740 feet (530 m) and the distance to the nearest resident is over 2,000 feet (610 m). Except for several small towns and villages and a portion of Middletown, CT, the area within a 10-mile radius is predominantly rural.

The yard elevation of 21 feet (6.4 m) is 1.5 feet (0.5 m) above the maximum recorded flood stage.

The containment structure is designed for wind loads up to 150 miles (241 km) per hour.

Although the area is considered seismically stable, the structure and systems

essential to the safe shutdown of the plant were designed on the basis of a moderately strong earthquake having a maximum horizontal ground acceleration of 0.17g at zero period.

3.1.3 Containment Design

The Haddam Neck reactor containment building is constructed of reinforced concrete with an interior steel liner which acts as a leakage barrier. Its structure is a right circular cylinder with a hemispherical dome and a flat base. The inside diameter of the cylinder is 135 feet (41.1 m) and the height is 119.5 feet (36.4 m), and therefore the gross volume is approximately 2.4 x 10^6 ft^3 (68,000 m^3) and the net volume is roughly 2.2 x 10^6 ft^3 (62,300 m^3). After excluding internals, the net free volume is approximately 2.1 x 10^6 ft^3 (60,000 m^3). The cylindrical wall is 4.5 feet (1.37 m) thick and the dome is 2.5 feet (76 cm) thick. The steel liner is 1/4 inch (6.4 mm) thick on the bottom, 3/8 inch (9.5 mm) thick on the cylindrical walls and 1/2 inch (12.7 mm) thick on the dome. The flat concrete basemat is 9 feet (2.74 m) thick with an additional 2 feet (61 cm) thick concrete floor slab over the bottom liner. [14]

The containment structure's principal design load is the internal pressure that could be created by the "maximum credible accident," which is a complete blowdown of reactor coolant. Thus the containment design basis accident (DBA) is a large-break loss-of-coolant accident (LOCA), a double-ended guillotine rupture of a main coolant pipe. The reactor coolant system contains 366,700 lbs (166,300 kg) of water at a weighted average enthalpy of 594.5 Btu/lb (1.4 MJ/kg), having a total energy content of 214,450,000 Btu (2,260 GJ). The DBA assumption of release of that water and steam into the containment led to the design of the containment structure for an internal pressure of 40 psig (0.28 MPa). [14]

The peak calculated post-accident temperature for the Haddam Neck containment of 280°F (137.8°C) is also based upon the design pressure of 40 psig (0.28 MPa). The normal temperature is approximately 120°F (48.9°C). [14]

The steel liner is used for leakage control. The concrete containment is designed to limit the consequences of any release of radioactive material from the reactor coolant system. Assumptions include releases of 100% of the noble gases, 50% of the halogens, and 1% of the solids in the fission product inventory to the containment atmosphere. The thickness of the concrete containment wall is not determined by structural considerations but by accident shielding requirements. [14]

3.1.4 Accident Mitigation Features

During the large-break LOCA taken as the DBA, in addition to the energy in break water released through the double-ended primary loop break, energy is released from (1) stored heat in the core, (2) stored heat in the reactor vessel, piping, and other coolant system components, and (3) fission product decay.

There are two separate long-term containment heat removal systems utilizing

different cooling principles: the containment spray system and the air recirculation system. These systems are typically sized to accommodate not only the energies associated with sensible and latent heat of the primary system coolant and reactor decay heat, but also energy released by metal-water reaction that could occur in accidents other than the DBA. [14]

Three mitigation devices that address these issues are: containment air recirculation, containment spray, and hydrogen control. In addition, there are devices to isolate the containment boundary.

o Containment Air Recirculation

The containment air recirculation system is the primary means by which heat is removed from the reactor containment atmosphere during normal operation or during and after any LOCA. There are four containment air recirculation units inside the reactor containment. During normal operation each unit is configured to include a cooling coil, fan, and connected duct work that distributes cool air throughout the reactor containment. However, following a LOCA each containment air recirculation unit is reconfigured to include moisture separators, high efficiency particulate filters, and filter trays filled with impregnated charcoal, as well as the cooling coils, fan, and connected duct work.

Axial flow fans circulate air from the containment atmosphere through the multiple cooling coils in a ducting arrangement designed so that failure of one unit does not adversely affect the others. The fan cooler systems are able to withstand the conditions created by a LOCA, during which they provide both air cooling and steam condensation functions. Condensate flows to the containment emergency sump for use by the spray or emergency core cooling systems. [14]

o Sprays

The containment spray system provides an additional means by which the reactor containment can be depressurized in the event of a LOCA. It is a backup to the containment air recirculation system. The spraying of cool water into the containment atmosphere provides a mechanism for condensation of steam. In addition to depressurization, since sodium hydroxide is added to the spray water to improve the radioiodine scrubbing capability of the spray, it can be effective in scrubbing fission products from the containment atmosphere. [14]

The spray system utilizes the residual heat removal (RHR) pumps, residual heat exchangers, and a spray header ring just inside the containment liner at an elevation of 110 feet (33 m) to spray water throughout the containment. Power to the residual pumps is normally available from the station service system. In the event of loss of offsite power, however, both pumps can be supplied by the plant emergency diesel generators. The spray system initially takes suction from the borated water, refueling pool, or sodium hydroxide storage tank and subsequently, when the initial source is depleted, from the emergency sump in the primary containment. Backup to the spray header

is taken from the diesel-driven fire pumps via a crosstie with the fire main header. Multiple and redundant heat exchangers are used to transfer thermal heat from the emergency sump to the plant's heat sink such as spray pond, lake, river, etc. [14]

At most U.S. PWR plants (though not at Haddam Neck) containment spray is automatically initiated in the event of a LOCA incident, and the RHR pumps would normally be aligned to deliver water to the reactor vessel in such an incident. (At Haddam Neck, to initiate spray, the operator must close valves to the line leading from the RHR pumps to the reactor vessel and open either of two parallel valves in the line leading to the spray headers. [14])

o Combustible Gas (Hydrogen) Control

To ensure containment integrity in the event of a loss-of-coolant accident that includes core damage with metal-water reaction, it is necessary to prevent hydrogen concentration from reaching the deflagration or detonation limit. The design objective, described in Regulatory Guide 1.7, is to maintain combustible gas concentrations to less than 4% by volume. Systems of hydrogen igniters have been installed to prevent buildup of hazardous large concentrations in Grand Gulf (BWR Mark III) and Sequoyah (Westinghouse Ice-Condenser).

At the Haddam Neck plant, in the event that the hydrogen concentration reaches an alarming level, hydrogen control is accomplished by simple confinement in the containment. Two options have been identified for mitigation thereafter: addition of air to dilute hydrogen concentration and purging. [14]

The containment purge system is designed to remove the small quantities of activity released during normal operation from the reactor coolant system, and purged air is ultimately discharged from the primary vent stack; it is not designed for continued operation during an incident. The system consists of two parallel prefilters (52,000 cfm (1472 m^3) each), a high efficiency particulate absolute filter, a high efficiency charcoal absolute filter, two parallel ventilation and purge fans (52,000 cfm (1472 m^3) each), and a 2000 cfm (56 m^3) iodine removal unit. A purge flow of 35,000 cfm (991 m^3) will result in roughly one reactor containment volume change per hour. [14]

o Containment Isolation

The containment isolation system is designed to maintain containment integrity by allowing normal or emergency passage of fluids through the containment boundary while preserving the ability of the boundary to prevent or limit the escape of fission products that may result from postulated accidents.

Isolation is effected automatically and/or manually through the use of a multiplicity of check valves, motor-operated valves, pneumatically operated valves, and hand block valves. The containment isolation

equipment is an engineered safety feature and is designed to handle the extreme loads of temperature, pressure, humidity, and radioactivity, associated with DBAs. Each isolation feature is mechanically and electrically redundant and all valves are of a fail-closed type. [14]

3.2 Cuban V213 Containment

3.2.1 Siting [2,3,17]

The factors that led to the selection of the Cuban V213 station site, 8 km southwest of the city of Cienfuego, are (1) population density, (2) availability of transportation, and (3) area seismic characteristics. The site has a low population density and a 2.5 km (1.6 mi) isolation zone.

These plants are designed to accommodate the 10,000-year return-period tsunami, hurricane, tornado, and earthquake. Elevations to accommodate flooding are 15 m (49 ft) for the turbine building and 17 m (52 ft) for the reactor (containment) building. The structures are designed for tornado wind speeds of 130 m/sec (293 mi/h). The safe shutdown earthquake is 8 on a Modified Mercalli scale and the operational basis earthquake is 6 on that scale.

3.2.2 Containment Design

The Cuban V213 containment is a cylindrical 1.5 m (5 ft) thick domed reinforced-concrete structure with an 8 mm (0.3 in) thick steel liner (see Figure 3.1). The outside diameter of the containment is 48 m (157 ft) and the height is 69.7 m (229 ft) above grade. The free volume is 60,000 m^3 (2.1 x 10^6 ft^3). [4,15] A bubbler-condenser tower pressure suppression system is built into the containment structure along the cylindrical wall of the building.

The pressure containment boundary for the accident localization compartment is indicated by a dark line on Figure 3.1. This boundary contains the pressure vessel, the steam generators, primary coolant loops with their isolation valves, as well as the bubbler-condenser towers and the region under the dome. This boundary is divided into two subregions: a high-pressure region made up of the volumes containing the primary loop and the bubbler-condenser towers; and a region of lower-pressure retention capability under the dome. These two regions are separated in the region of the reactor vessel by a bellows-type seal immediately below the top of the cylindrical portion of the vessel where the upper head is bolted on, and elsewhere by concrete walls.

The basic configuration of the steam generator compartment, deck compartment, and reactor pit of the Cuban designs is such that they do not sit on the building foundation. In order to minimize the lengths of pipe and cables and to facilitate access for inspection of the emergency system components [4], a series of rooms was created beneath the reactor vessel and primary loops (see Figures 3.2 and 3.3). The rooms below the primary loop contain the auxiliary

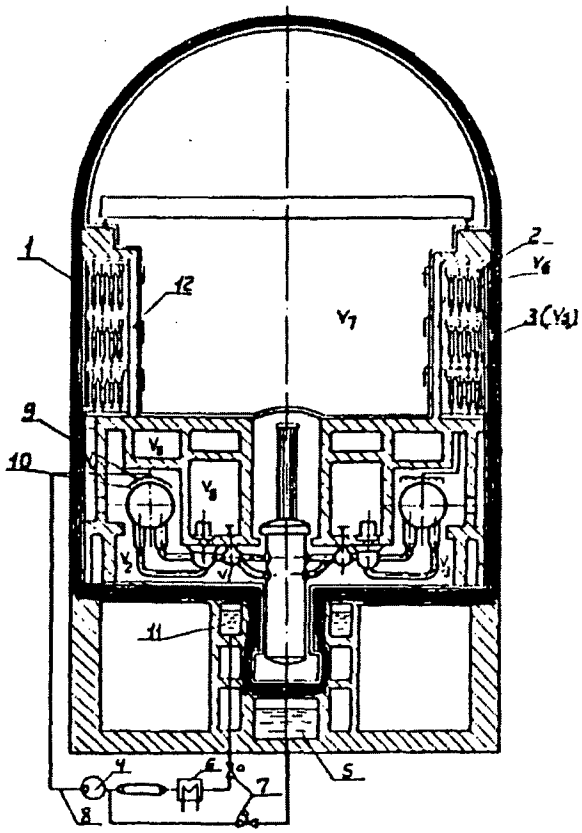

1-Bubbler-condensers; 2-Tray above bubbler-condenser tubes; 3-Bubbler-condenser tubes; 4-Spray system pump; 5-Borated water storage tank; 6-Heat exchanger; 7-Valves; 8-Pipe to active spray header; 9-Active spray header; 10-Active spray nozzles; 11-Sump; 12-Orifice; V_1, V_2, V_3, V_4-Accident localization volumes; V_5-Accident localization volume side of bubbler-condenser; V_6-Operating area of bubbler-condenser; V_7-Operating area volume.

Figure 3.1. Cuban V213 Containment

and safety systems such as emergency core coolant system (ECCS) components and spray system components and the high- and low-pressure ECCS pumps (see Figure 3.4). [4,17] Although there is no direct penetration from the bottom of the reactor shaft room to the outside environment, there are penetrations between these rooms beneath the primary loop and between the outside ring and the atmosphere; i.e., there are indirect paths to the atmosphere from the room beneath the reactor vessel room (the "reactor shaft"). [17] This series of rooms is outside the pressure containment boundary.

The Cuban V213s are designed to limit accident pressure buildup and scrub out fission products by a semi-annular bubbler-condenser pressure suppression

system similar in geometry to an ice-condenser containment but with elevated bubbler-suppression water-tray towers replacing the ice-condensers. This system will also serve to mitigate the effects of severe accidents. The bubbler-condenser towers are located in an approximately 240° annulus [18] (Figure 3.4) connected by a horizontal shaft, which connects to the reactor building at a level roughly at the top of the steam generators (the details of this connection are not available). The bubbler-condenser system is bounded by a semi-annular reinforced concrete shell with a gastight steel liner and is composed of a passive bubbling steam condenser, a passive sprinkler device, and an active sprinkler system [18,19]. The bubbler-condenser tower contains an ascending set of suppression pool trays filled with water to which boric acid, sodium thiosulfate, and potassium hydroxide are added. Uniformly spaced towers are installed in the shaft in three tiers arranged symmetrically relative to Channel A of Figure 3.2 for delivery of mixed steam and air from the reactor enclosures to the trays. In this manner, six bubbler-towers are provided with free volume inside the towers of 4,350 m^3 (0.15×10^6 ft^3) for the Cuban V123, along with an associated water volume contained in the bubbler-condenser towers of 780 m^3 (27,500 ft^3).

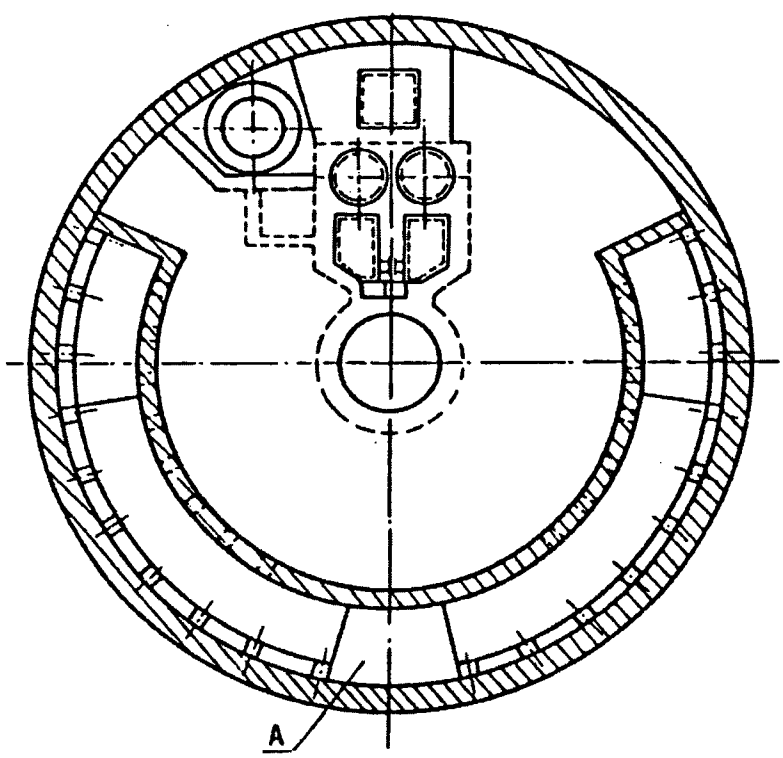

Figure 3.2. View of Bubbler-Condenser Configuration in Containment

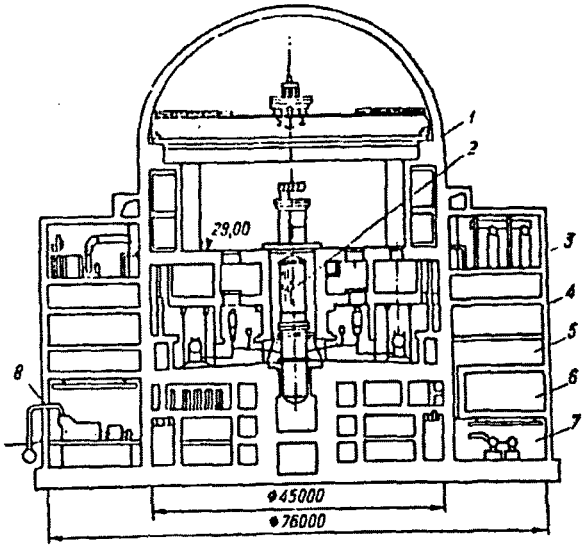

1-Steel-lined reinforced concrete shell; 2-Reactor vessel; 3-Ventilation equipment; 4-Annular shield building; 5-Electrical equipment compartment; 6-Borated water storage tank; 7-Emergency core cooling system components; 8-Diesel generators.

Figure 3.3. Cuban V213 Reactor Building

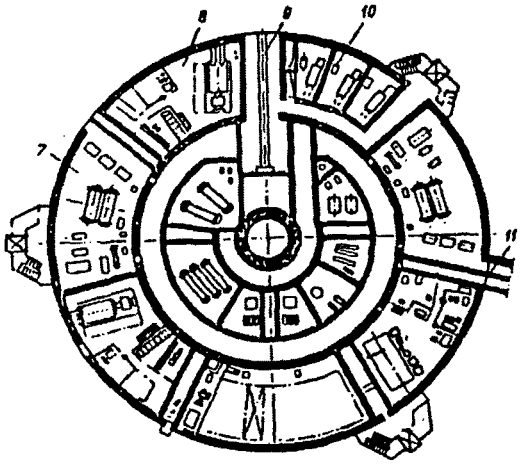

7-Emergency core cooling system components; 8-Diesel generators; 9-Rail track; 10-Makeup pumps; 11-Steam and feedwater piping connecting to turbine building.

Figure 3.4. Cuban V213 Reactor Building at 0 Elevation

The containment structure also includes passive bubbler-condensers, passive sprinklers, active sprinklers, and a number of systems for removing radioactive material.

The containments for the Cuban V213 plants are designed to mitigate and contain the effects of a guillotine rupture of a 50 cm (20 in) main coolant line. [4,15] The design pressure is 0.22 MPa (32 psig) with a 30-40% safety factor. The dome volume has a pressure retention capability of only 0.05 MPa (7 psig), as compared with a pressure of 0.15 MPa (22 psig) in the equipment volumes [4]. During the DBA, steam released in the equipment volumes is largely condensed in the bubbler-condenser towers, so that only relatively low pressures are expected in the dome. The region containing the vessel and primary system components will be under a negative pressure (vacuum) during the later portions of a DBA, thus allowing only in-leakage while the upper compartment will be pressurized to a relatively low level.

Injection water after a DBA initiation is assumed exhausted after 15 minutes. Containment sprays, both passive and active, are assumed to establish a negative pressure of 0.08 MPa absolute (about 12 psia) relative to the pressure in the dome in about 20 minutes. This vacuum condition is conservatively estimated to last for 3 days (best estimate is 10 days) [2]. The radionuclide release path is through the bubbler-condenser suppression pools, into the upper containment (dome) where it is assumed to leak back into the equipment volumes at rates varying from 0.3 to 1.0% per day. [2]

For the siting DBA, a 10% core melt was assumed with instantaneous release into the lower compartment of the containment. The calculated dose from that DBA at the site boundary of 2.5 km (1.6 mi) is 15 rem thyroid and 1 rem whole body. During the DBA, the control room is protected with a positive overpressure heating, ventilation, and air-conditioning system. [2,3]

In the structural analysis performed for the Cuban V213 containment, the combined loads of the DBA and a seismic event were assumed. The containment is designed to accommodate nine load combinations, including deadweight loads, equipment loads, and loads resulting from temperature effects, seismic events, and external explosions (with a pressure loading of 0.3 kg/cm^2 (615 lb/ft^2)). The design loads are reported to exceed those calculated for the Chernobyl accident. [2]

The set of DBAs for all V213s includes breaks of primary circuit leaks up to the double-ended guillotine break of the biggest pipe (a main coolant pipe), a spectrum of steam line and feedwater line breaks, steam generator collector break, and anticipated transients without scram.

3.2.3 Accident Mitigation Features

As with U.S. plants, the Cuban V213s include devices designed to mitigate the challenges to containment integrity by the phenomena accompanying the set of design basis accidents. The following such systems are discussed below: the bubbler-condenser system, spray systems, and hydrogen control systems.

- Bubbler-Condenser

This system is intended to accommodate the double-ended guillotine rupture of any single primary system pipeline, including a 50 cm (20 in) primary coolant inlet or outlet pipe; i.e., a large-break LOCA. Steam discharging from a break is drawn from the original localization structure to the bubbler-condenser towers. The bubbler-condenser tower system consists of two parallel and interconnected towers. The first tower houses three levels of suppression pool trays while the second contains four levels of expansion volumes (see Figure 3.1). Each pipe directs the steam downward and beneath the surface of the water, which is estimated to be 10 to 20 cm (3.9 to 7.9 in) deep in each tray, and as the steam subsequently bubbles upward through the water it is condensed. [4] These layers of simultaneously active suppression pools can be thought of as having a similar function to the layers of ice trays in an ice-condenser plant. However, the thermal-hydraulic phenomena involved in the steam cooling and condensation process are similar to those of the BWR suppression pool rather than to the ice-condenser phenomena. The pools also perform fission product scrubbing, which is enhanced by the boric acid, sodium thiosulphate, and potassium hydroxide dissolved in the water.

The bubbler-condenser serves to limit early steam pressure buildup and, as discussed in Section 7.1, is designed to keep the peak pressure in the equipment compartments from a large-break LOCA to 0.15 MPa (22 psig) in the Cuban V213, which is the design pressure.

The bubbler-condensers create a loop seal between the volume above their trays and the accident localization volumes. The V213s are designed to operate such that this loop seal can maintain the pressure of the accident localization volumes at a pressure slightly below 1 atmosphere, once the pressure is reduced to that level by the sprays in those volumes.

Scale model and full-scale experiments have been performed in the USSR to confirm the performance of the bubbler-condenser systems. [18,19]

- Sprays

Three independent active and three independent passive spray systems are incorporated in the Cuban V213 system, spraying into the steam generator rooms and the reactor coolant pump rooms; but there is no spray in the reactor shaft, nor do available data indicate any spray in the dome. Water is initially pumped from the borated water storage tank and, after exhaustion of that supply, collected from the sump system and may be recirculated either by the spray pump or by the ECCS. The borated water also contains hydrazine-hydrate to chemically react with any radioactive iodine that may be encountered in those compartments.

Table 3.1 gives those details that have been provided regarding the capacities and capabilities of these systems.

Table 3.1. VVER-440 Emergency Water Supply Systems

Number of high-pressure pumps	3
Delivery, m^3/h	65-130
Head, kgf/cm^2	135
Number of low-pressure pumps	3
Delivery, m^3/h	300
Head, kgf/cm^2	7
Capacity of borated water (12g/kg) tanks servicing sprinkler pumps as well, m^3	3 x 500
Boron concentrate tank capacity, m^3	3 x 100
Heating power of low-pressure heat exchangers, Gcal/h	3 x 40
Number of sprinkler pumps	3
Delivery, m^3/h	65 [15] (280 [20])
Head, kgf/cm^2	135
Capacity of passive sprinkler system tank, m^3	400
Capacity of hydraulic accumulators, m^3	4 x 70

Source: Atomenergoexport [15]; Nuclear Power Plants with VVER-440 Reactors [20].

- Combustible Gas (Hydrogen) Control

  The Cuban V213 will have a system to burn hydrogen to preclude accumulation in explosive concentration. [17] No details are available regarding this system.

- Containment Air Recirculation

  No details are available regarding this system.

- Containment Isolation

  No details are available regarding this system.

3.3 Comparative Discussion

The Cuban V213 containment system is structurally similar to the ice-condenser structure and is geometrically similar to the Loviisa ice-condenser containments. However, the Cuban V213 bubbler-condenser system behaves phenomenologically in a manner more similar to the BWR suppression pool: steam escaping from a broken pipe in the steam generator room would flow to the bubbler-condenser tower where it would be condensed. Gases bubbling up

through the trays in the bubbler-condenser are convected to the dome above the reactor, providing additional expansion volume for gases once they have passed through the bubbler-condenser system. In this sense, the domed region above the primary containment volumes serves a function similar to that of a filtered vented containment; i.e., steam and fission products pass from the primary containment volumes to the bubbler-condenser tower where steam is condensed and fission product scrubbing takes place, and the residual gas passes to the dome.

Steam and fission products generated by large-break LOCAs and severe accidents would be convected through the bubbler-condenser towers, where pressure reduction and some scrubbing would take place, and thereafter to the upper dome. Because of this particular design flow path, the dome has a design pressure retention capability of only roughly 0.05 MPa (7 psig) [4], in contrast to typical U.S. PWR designs where the dome has the same design pressure as the rest of the containment structure.

In addition, steam and fission product gases evolving from a core damaging accident that ruptured either the reactor vessel or the main coolant lines would, by pressure gradients, be convected to the bubbler-condenser tower where injection beneath the surface of the water in the trays would force a certain amount of fission product scrubbing. However, an accident that vents directly to the dome would bypass and not take any advantage of the bubbler-condenser features.

There is a thin containment shell above the reactor vessel head with a low pressure retention capability. Therefore, a break in the reactor pressure vessel head (e.g., through a control rod drive or other head penetration or through the head-to-vessel seal) would result in steam flashing directly into the upper portion of the containment building, bypassing the bubbler-condenser system. If the time-dependent pressure inside the upper portion exceeded its structural capability, a direct path to the atmosphere would be opened. We do not know whether such a VVER accident has a significant probability. A corresponding PWR vessel-head accident in a U.S. ice-condenser containment has been viewed as not credible; however, were it to occur, its consequences for containment integrity could be similar to those for the Cuban VVER.

The pressure responses for a core damage accident have not been computed and, therefore, we do not know to what extent this containment design would be successful in containing or mitigating such an accident.

The emergency core cooling system (ECCS) room lies below the reactor shaft. In a severe accident molten core materials could erode through the reactor shaft bottom and reach the ECCS room (which is unsealed). The plant diagram shown in Figure 3.3 indicates a particularly thick concrete basemat at the bottom of the reactor shaft, which could function as a core catcher. Since these rooms are outside the containment boundary and unsealed, the failure of the reactor shaft basemat in event of a severe accident with molten fuel would open a direct path for escape of fission products to the environment.

The Cuban V213 design appears to have severe accident mitigation capabilities

comparable to those of Western reactor plants (see Table 3.2). The combination of large containment volume with bubbler-condenser pressure suppression and expansion into the dome, coupled with redundant emergency core cooling system (ECCS) and sprays, while somewhat different from any particular U.S. design, nevertheless appears to achieve the same level of protection.

While the use of three independent safety trains in the Cuban V213s provides redundancy at typical U.S. levels, there is a potential common mode failure problem, because all are electrically powered. Similarly, the V213 design generally lacks diversity in auxiliary feed and ECCS trains, and it is not known at this point whether any plans exist to improve upon this aspect. Finally, as in U.S. designs, there is no crossover from one system to another (e.g., diesel in train A cannot be used with pump in train B) [3].

Table 3.2. Cuban V213, Haddam Neck, Sequoyah, and Grand Gulf Containment Characteristics

	Cuban V213	Haddam Neck (dry)	Sequoyah (ice)	Grand Gulf BWR Mark III
Power, MWt	1,300	1,825	3,423	3,579
Containment free volume, ft^3	2,100,000	2,200,000	1,200,000	1,700,000
Suppression pool free volume, ft^3	150,000	0	330,000	160,000
Water mass, lbm	1,375,000	0	2,300,000	3,750,000
Design pressure, psig				
Drywell	7[a]	40	11	23
Wetwell	22[b]		15	15

[a] The region immediately under the dome.
[b] The bubbler-condenser towers and the accident localization volumes.

3.4 Other VVERs

3.4.1 European V213s

Two primary differences distinguish the European V213 from the Cuban V213: the European V213 has no dome and therefore has a smaller pressure containment volume (50,000 m^3 versus 60,000 m^3); and the European V213 has a substantially larger bubbler-condenser tower with connected expansion volumes (25,000 m^3 versus 4,350 m^3) containing more water inventory (1,250 m^3 versus 780 m^3). The first tower houses 12 levels of suppression pool trays in the

European V213s while the second contains four levels of expansion volumes on the European V213s and 163 individual water trays are provided at each level. Figure 3.5 shows the relative positions of the bubbler-condenser system. [19]

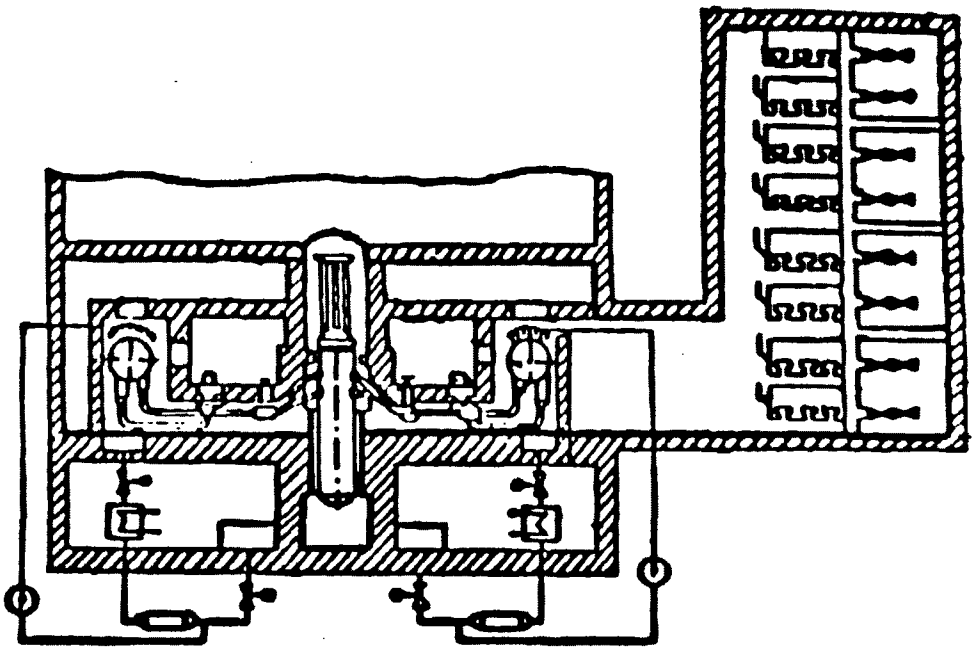

Figure 3.5. Closeup View of Localization Compartments for European V213

The pressure retention capability of the volume above the vessel shaft which is bounded by a flat roof (see Figure 3.6) was not disclosed in the reviewed literature, but would appear to be minimal. This volume is not part of the European V213 accident localization system [4].

The accident localization system of the European V213 design is intended to accommodate, similarly to the Cuban V213, the double-ended guillotine rupture of any single primary system pipeline, including a 50 cm (20 in) primary coolant inlet or outlet pipe.

Computations performed by Bukrinskij et al. [19] for the resultant pressures to be expected from the rupture of a 50 cm (20 in) pipe (roughly the diameter of a main coolant line) indicate that the pressure in the reactor room peaks earlier and stays higher than does that of the Cuban V213. The pressure in the European V213 peaks at roughly 0.23 MPa absolute (33 psia) between 3 and 5 seconds after the break while the pressures in the bubbler-condenser rooms peak at roughly 0.18 MPa absolute (26 psia). Details of this analysis are contained in Section 7.1. The design pressures for the accident localization volumes for the European V213s are reported to be an excess pressure of 0.25

MPa (37 psi). [21]

The accident mitigation features of the European V213 are functionally comparable to those of the Cuban V213 with the exceptions of the presence of the dome on the Cuban V213 and the difference in the size of the bubbler-condensers.

The containment performance capability of the flat-roofed containment buildings of the European V213 is believed to be inferior to that of the domed containment of the Cuban V213 design. However, we do not know the extent of that inferiority.

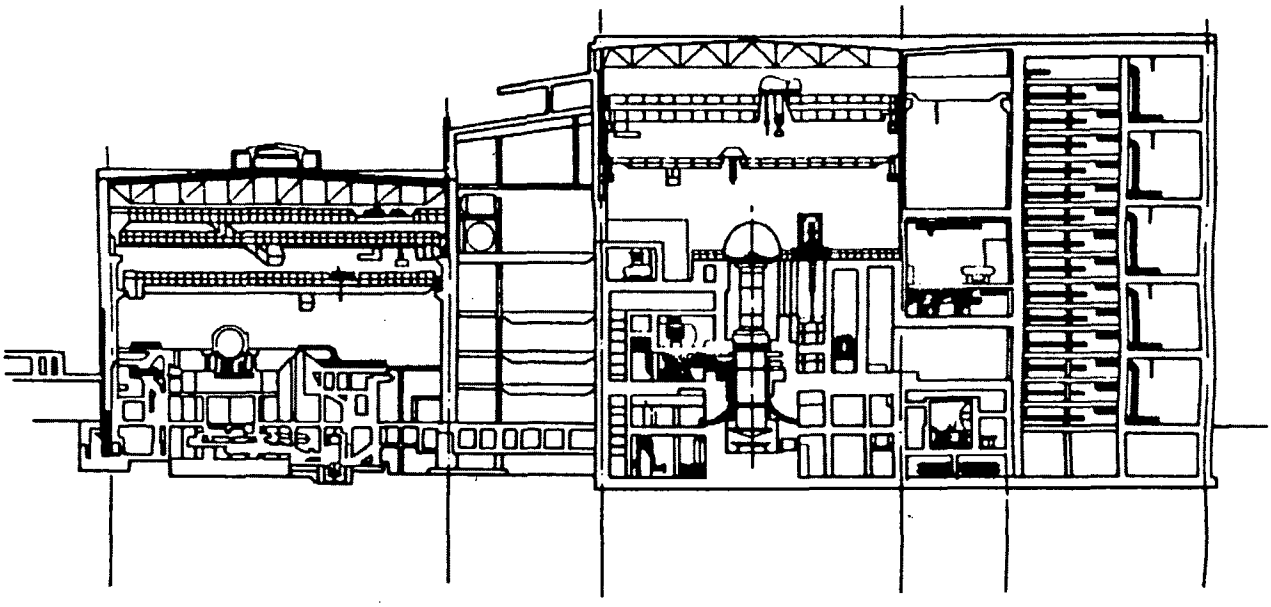

Figure 3.6. Elevation View of European V213 Plant

3.4.2 Loviisa V213

The Loviisa V213 design includes a steel-domed primary containment inside a reinforced concrete secondary containment whose free volume is 57,000 m^3 (2.0 x 10^6 ft^3) [22]. A unique feature of the Loviisa containment is that it is designed with a Westinghouse ice-condenser. The ice-condenser contains ice in a vertical series of ice trays, located in a semi-annular region, extending 300° around the perimeter of the primary containment, and serves as a large heat exchanger. Steam is condensed within it and air plus other non-

condensible gases are convected to the upper compartment during an accident. The Loviisa design was the precursor to the VVER bubbler-condenser system design. The geometrical layout of the ice trays in Loviisa is similar to that of the bubbler-condenser towers in the V213s. In Loviisa non-condensed gases can migrate into the domed containment.

In the European V213, non-condensed gases are contained in the towers, whereas in the Cuban V213 such gases are released into the dome.

The design pressure of the ice-condenser containment is 0.08 to 0.1 MPa (12 to 15 psig) with a negative design operating pressure on the order of 0.003 MPa (0.5 psi) and vacuum breakers that may be present in the containment wall to prevent this value from being exceeded. More details are provided in Appendix B.

A list of safety analyses originally performed by the Russian supplier of Loviisa is also included in Appendix B to this report.

3.4.3 V230s

The V230 accident localization system relies solely upon the pressure retention capabilities of the six interconnected reactor facility rooms housing steam generators, primary coolant pumps, and other major components. The V230 has no bubbler-condenser towers (see Figures 3.7 and 3.8) and its total accident localization volume is 10,000 m^3 (0.35 x 10^6 ft^3), much smaller than the 60,000 m^3 (2.1 x 10^6 ft^3) in the Cuban V213 or 50,000 m^3 (1.8 x 10^6 ft^3) in the European V213. [4]

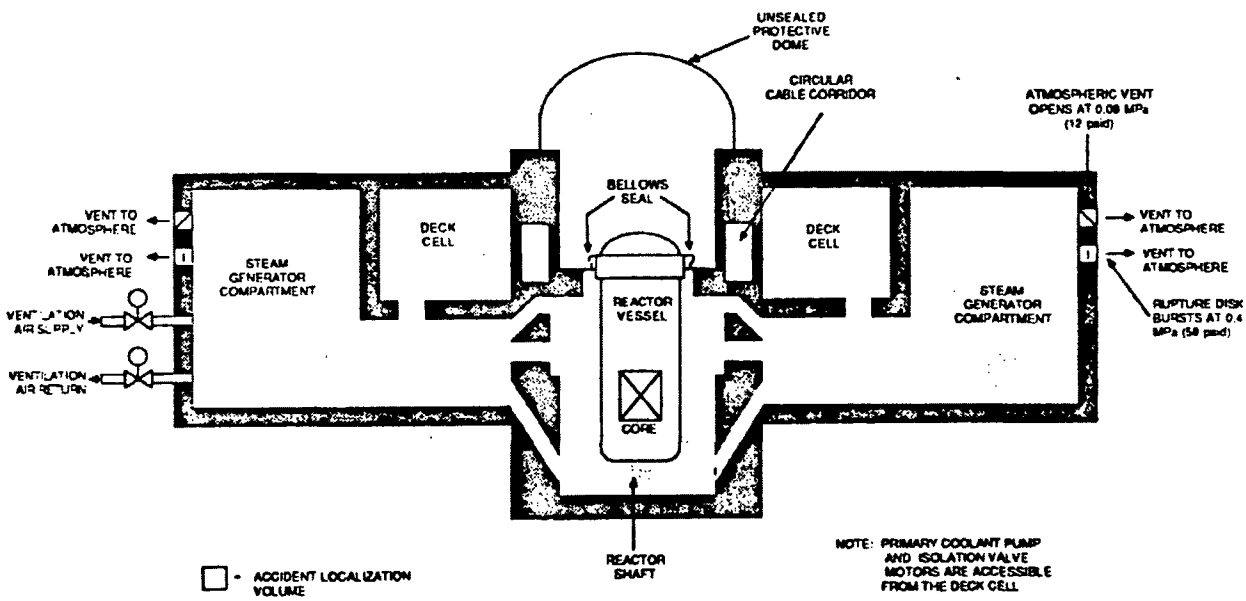

Figure 3.7. V230 Accident Localization Compartments

The design pressure of the localization volume of the V230 is roughly 0.1 MPa (15 psig). Because of its much smaller volume, this pressure would accompany the break of a pipe of a diameter of 10 cm (3.9 in). It is worth noting, in this regard, that Venturi flow constrictors having a 3.2 cm (1.3 in) diameter are installed in piping of 5 to 10 cm (2.0 to 3.9 in) diameter, while constrictors of 2.0 cm (0.79 in) diameter are provided in smaller piping to restrict the steam formation rate [2]. Thus the spectrum of pipe breaks encompassed by the DBA for the V230 plants is broader than would appear by the bare numbers. However, the design basis envelope clearly does not extend to the loads created by larger breaks such as the double-ended guillotine rupture of a 50 cm (20 in) diameter main coolant line. [4] Indeed, the V230 design provides virtually no protection against any but small breaks. Thus, while in the context of a risk assessment it may very well satisfy the need to protect against the higher probability but generally lower-consequence accidents, it provides no comfort with respect to those high-consequence accidents of interest here.

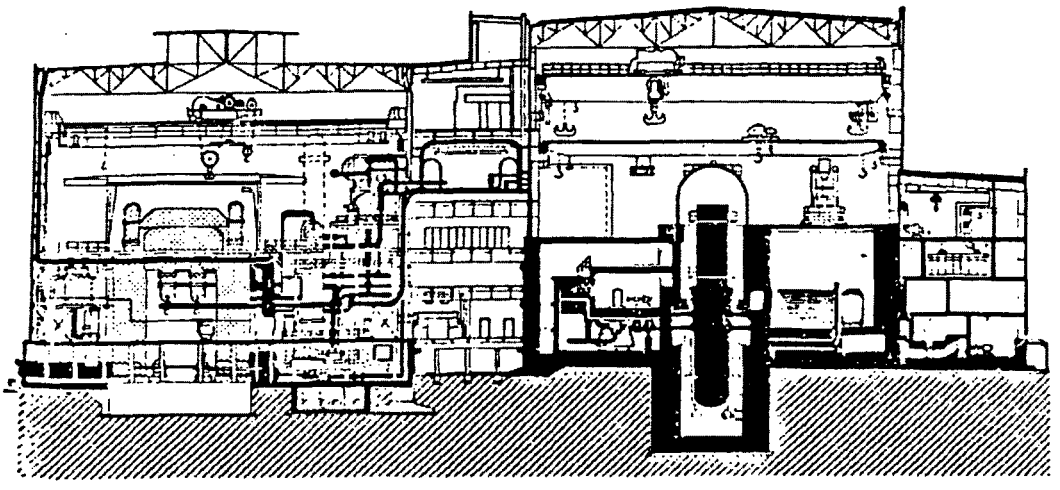

Figure 3.8. Elevation View of V230 Plant

The makeup system, designed to compensate flow leak rates of roughly 100 m^3/h (3500 ft^3/h), is clearly incapable of permitting recovery from a large break. The loop isolation valves are, therefore, critical in enabling the plant operators to stem the loss of primary fluid and minimize core damage. We have no information regarding any system capable of providing low-pressure

high-flowrate emergency cooling.

o Sprays

Sprinklers that spray borated water are located inside the steam generator and deck compartments in the accident localization volumes to condense steam. The sprays are activated when the overpressure resulting from the formation of steam exceeds 0.02 MPa (2.9 psig). The vertical piping of the sprinkler system is nominally filled with water to minimize the delay between activation of the system and the entry of the spray into the localization compartments.

Water and condensed steam are collected with a sump system and may be recirculated into the localization compartments by using the high-pressure makeup pumps. [4] There are three such pumps in the Czechoslovakian V230s [11]. Heat exchangers between the pumps and the sprinklers cool water recirculated in this manner.

o Combustible Gases (Hydrogen) Control

It does not appear from available information that the V230 is designed to accommodate hydrogen recombiners inside the accident localization region.

o Venting

If the pressure in one of the V230 localization volumes exceeds 0.08 MPa (12 psig), the pressure relief valves open to the atmosphere. For the pressure above 0.1 MPa (15 psig), which is expected to accompany a 20 cm (7.9 in) rupture, venting is performed to the outside of the localization volumes. In the case of a 50 cm (20 in) pipe break, much higher pressure is expected in these volumes. In such event, rupture discs open at 0.4 MPa (58 psia) to relieve pressure by venting steam and air to the atmosphere.

o Containment Air Recirculation

A forced draft ventilation is provided to clean up the air inside the accident localization compartments. Air is drawn from the accident localization volumes, and radioactive impurities are removed with iodine and aerosol filters. The filtered air is ultimately discharged to the outside environment. If the overpressure inside the accident localization rooms rises above the limit, as following the rupture of a primary system compartment, then shutoff valves are closed to prevent the escape of steam and fission products through the air purification circuit.

o Containment Isolation

There is no containment isolation capability, in the U.S. sense, present in the accident localization volume.

The difference in containment volume, coupled with the absence of pressure suppression mechanisms other than sprays, is a very important and fundamental difference between the V230 and the V213 designs. The net effect is to substantially reduce the peak pressure retention capability of the V230. If the pressure exceeds the design basis in the V230, steam and other gases are vented to the atmosphere. [4]

3.4.4 VVER-1000s

VVER-1000 containment (see Figure 3.9) consists of a steel-lined (0.8 cm (0.31 in) thick carbon steel liner), prestressed, reinforced concrete containment having a cylindrical wall, circular base and elliptical dome that completely encloses the reactor and primary system components. The free volume inside the containment is 70,000 m^3 (2.5×10^6 ft^3), roughly comparable to a similar power level Western plant. This type of containment is characterized as a dry containment in the U.S.

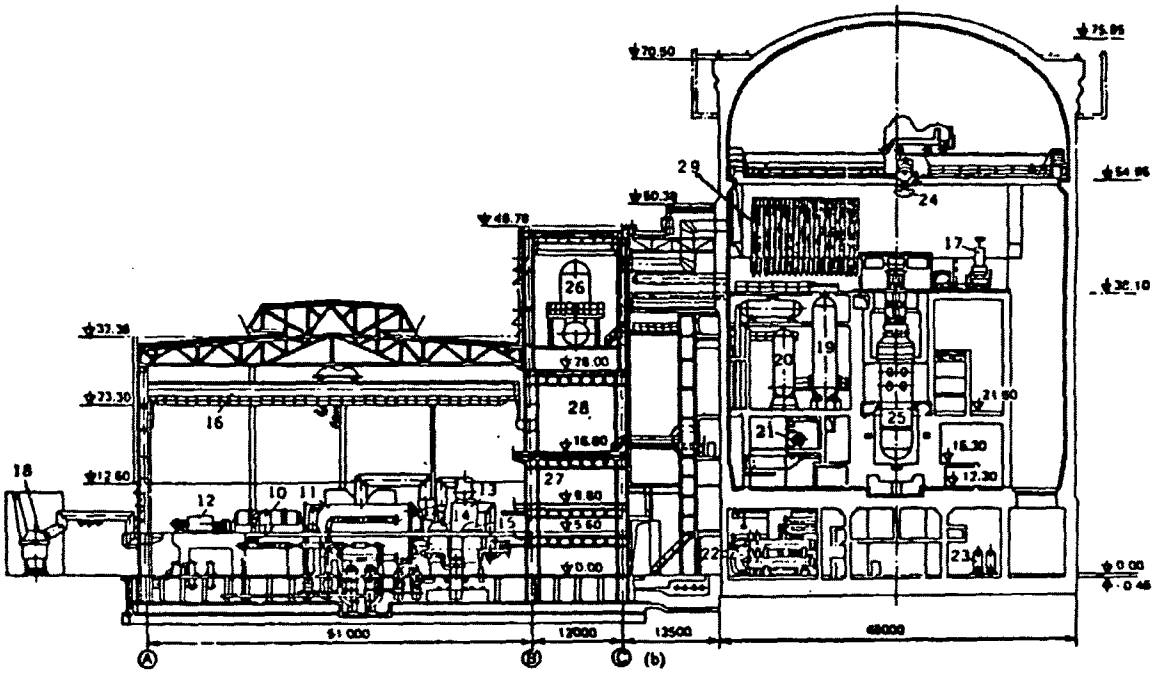

10-Generator; 11-Low-pressure turbine; 12-Exciter; 13-Separator-reheater; 14,15-Low-pressure heaters; 16-Overhead crane; 17-Fuel handling machine; 18-Transformer; 19-Pressurizer; 20-ECCS accumulator tank; 21-Ventilation equipment center; 22-ECCS equipment; 23-Steam blowdown expander; 24-Polar crane; 25-Reactor pressure vessel; 26-Deaerator; 27-Control room; 28-Ventilation center; 29-Fresh fuel storage.

Figure 3.9. Elevation View of VVER-1000 Plant

Although the overall dimensions of the VVER-1000 containment are approximately the same as that of the Cuban V213, the free volume inside the VVER-1000 containment is 17% larger than that of the Cuban V213 because it has no bubbler-condenser and fewer steam generators. The VVER-1000 containment has a design pressure of 0.41 MPa (60 psig) and a design temperature of 150°C (300°F). These are the conditions expected to accompany the double-ended rupture of any single primary system pipeline including a break at the end of the nozzle (a diameter of 85 cm (33 in)) connecting it to the vessel, whereas the V213s are designed for the break of the 50 cm pipe.

The VVER-1000 appears to also have, see Figure 3.9, a particularly thick concrete pad beneath the reactor vessel, which could function in severe accidents as a core catcher. No specific information has been gathered in this regard.

It appears that the VVER-1000 also is designed with unsealed rooms below the reactor shaft such that if molten core materials penetrated the bottom of the reactor shaft, they might have a more direct environmental release path.

o Sprays

Three independent spray systems are incorporated in the VVER-1000 series, and spraying can be done in the steam generator compartment and the containment dome. The sprays can spray either borated or hydrogenized water and can recirculate from the sump. Three heat exchangers are available to cool the water drawn from the sump system.

Condensed steam is collected in a sump, and water from the sump may be recirculated back into the primary system by the high- and low-pressure pumps of the ECCS. Following injection of boric acid from the storage tanks, water is presumably taken from the sump system and recirculated into the primary system. [4]

o Hydrogen Control

Hydrogen recombiners are provided. No additional information has been located regarding any hydrogen control systems.

o Containment Air Circulation System

There is a containment air purification system to remove iodine and other radioactive aerosols. [4]

o Containment Isolation

No information is available with respect to containment isolation capability.

The design philosophy of the VVER-1000 appears to be fundamentally similar to that of Western PWR designs.

CHAPTER 4. REACTOR PLANT

In this chapter the Cuban V213 reactor system is compared with that of the Haddam Neck plant. This comparison covers relevant features of the fuel assemblies and control rods, primary and secondary loop components, and safety-related components such as the emergency core cooling system and auxiliary feedwater system. Features of other VVERs that are significantly different from those of the Cuban V213 are discussed at the end of the chapter.

The basic design of the principal primary loop components of the Cuban V213 is similar to that of Haddam Neck, except that the Cuban V213 has six loops whereas the U.S. PWR has four. However, there are substantial differences in the designs and sizes of the reactor cores.

4.1 Fuel Assemblies and Control Rods

U.S. PWR

Each of the 157 fuel assemblies in the Haddam Neck plant contains 204 fuel rods in a 15 x 15 square array. The center position in each assembly is reserved for in-core instrumentation, and the remaining 20 positions have guide thimbles for the rod cluster control assemblies. There are 45 rod cluster control assemblies located in the core. The fuel assemblies are manufactured in three slightly different fuel enrichments, and the various enrichments are arranged in the core in three concentric rings. [14]

The control rod drive mechanisms, used for withdrawal and insertion of the control rods into and out of the reactor core, provide sufficient holding power to keep the rod clusters stationary when not in motion. Fast insertion (reactor trip) is obtained by simply removing electrical power, allowing the control rods to fall by gravity. [14]

The fuel claddings for most of the U.S. PWR and BWR fuel rods are zirconium alloys, Zircaloy-4 and Zircaloy-2, respectively. Haddam Neck and two other older plants contain stainless-steel-clad fuel rods. The fuel rods are pre-pressurized with helium to prevent pellet-cladding interaction failure. [14]

Haddam Neck will be converted to zircaloy-clad fuel rods in the 1990s.

The average core burnup varies with each cycle of reload; at the end of cycle it is roughly 22,000 MWd/MTU. The cycle design length in effective full-power days (EFPD) is about 340 to 360 days, or 8160 to 8640 full-power hours. Approximately one-third of the core is replaced with fresh fuel at each

reload cycle. The design initial core loading is 64.4 MT of uranium. Specific power, then, is about 29 kW/kg of uranium. The fuel is initially 4% enriched with U^{235}. [14]

Cuban V213

Each of the 349 fuel assemblies in the Cuban V213 consists of a hexagonal bundle of 126 fuel rods, made up of uranium dioxide pellets, with spacer grids as shown in Figure 4.1. A fuel assembly shroud keeps the flow of coolant inside the fuel assembly much like a typical BWR and holds all parts of the reactor fuel assembly in an integral unit. All Cuban V213 fuel is manufactured in the USSR. [4,15]

Of the 349 fuel assemblies, 312 are fixed in place and 37 contain movable control assemblies, which are widely spaced but shifted toward the periphery of the core. The bottom portion of the movable assembly contains fuel and is in tandem with the upper portion containing the control material. [15] Speed of control rod movement in the regulating mode is 2 cm/s (0.8 inch/s) and in the emergency mode is 20 to 30 cm/s (7.9 to 11.8 in/s), and time to accelerate to 20 cm/s (0.8 in/s) is no greater than 0.7 seconds. [20]

When the entire shim/fuel assembly is extracted from the core, a hexagonal water cavity remains to act as a neutron trap with 70% of the control system absorbing efficiency. [4]

The fuel cladding for Cuban V213 fuel rods is fully recrystallized zirconium-niobium (Zr-Nb) alloy. Zr-Nb alloy is also used for fuel assembly structural material. No information was available regarding whether or not the fuel rods are pre-pressurized. [23]

It has been reported that, since the axial clearance was lost in certain fuel rods when the fuel assembly burnup exceeded 30,000 MWd/MTU, the Soviets underestimated fuel rod elongation due to burnup. Buckling of the rods was ruled out because the upper spacer grid yielded under small loads. [23]

Gradual conversion of VVERs to fuel of increased density or the addition of thorium into the fuel cycle is being considered to achieve higher burnup [23]. Due to power peaking limitations, VVER-440 fuels may be limited to lower burnups than those achieved in some U.S. PWRs. This contributes to the harder neutron spectrum in the VVER reactors.

Core uranium loading is 42 metric tonnes. Specific power is 33 kW/kg of uranium. Fuel is enriched with U^{235} to a range of 1.6 to 3.6%. One-third of the core is refueled after 7000 average full-power hours of operation. The average burnup is 28,000 MWd/MTU, while the maximum burnup is 40,000 MWd/MTU. An increase in fuel enrichment to 4.2% would increase the burnup to roughly 39,000 MWd/MTU. An increase in the number of core refueling regions may be necessary to alleviate power peaking problems, although it results in a reduced operating cycle length. A five-region core loading pattern could result in the burnup increasing to roughly 44,000 MWd/MTU. [23]

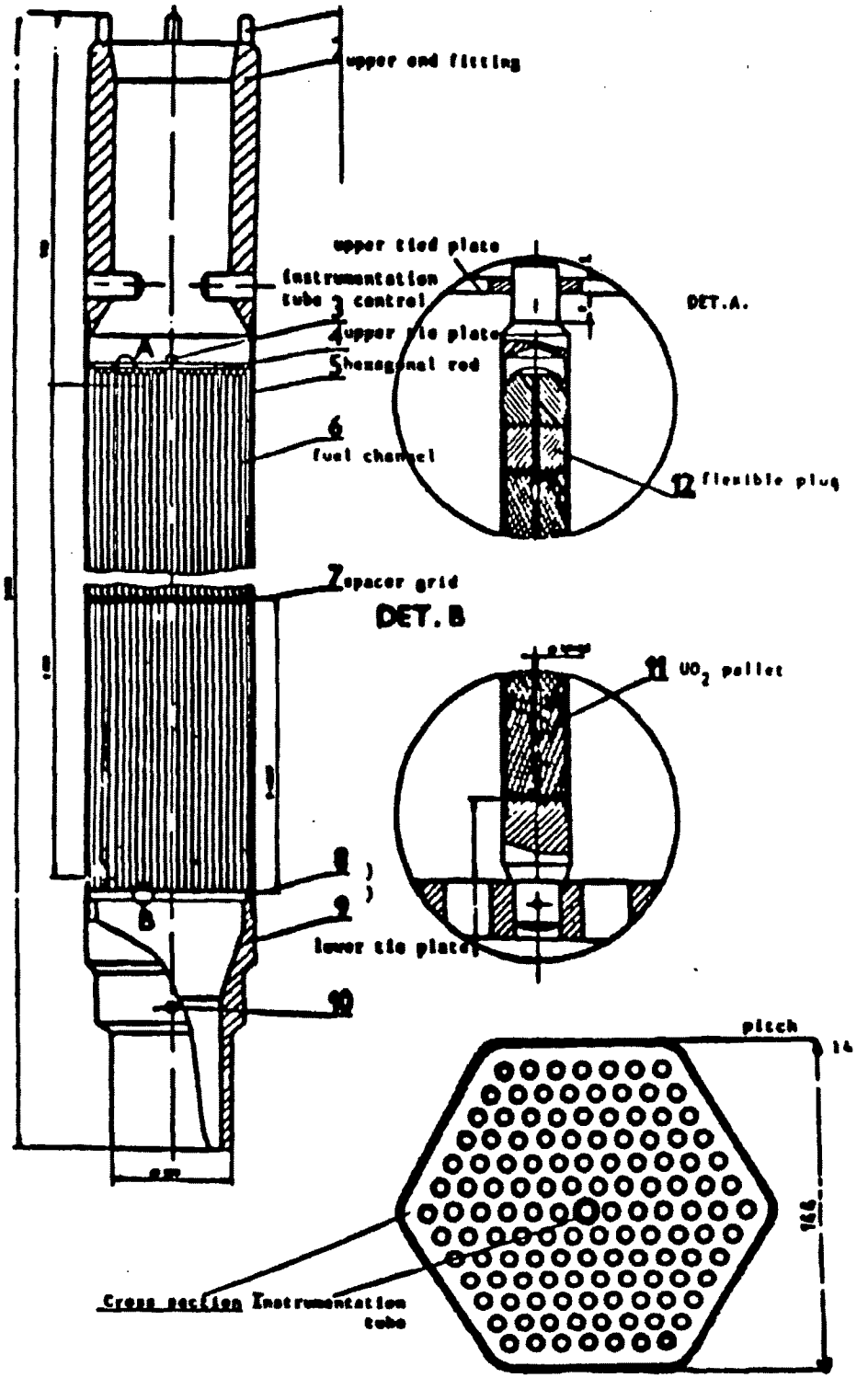

Figure 4.1. VVER-440 Fuel Assembly [24]

Comparative Discussion

The primary safety impact from differences in fuel assembly design stems from the fact that the Cuban V213 fuel is housed in a closed can in contrast to that of a U.S. PWR fuel assembly. The safety significance of this difference is difficult to assess without plant-specific analysis. The presence of the can wall could enhance local blockage formation during core slumping.

It is not certain if the Soviets have taken any measures to minimize the pellet-cladding interaction failure since no information is available as to whether the rods are pre-pressurized [23].

It is not known whether the Cuban V213 cores have been redesigned to achieve a lower neutron leakage to minimize a vessel embrittlement problem.

4.2 Reactor Vessel

U.S. PWR

The reactor vessel is a steel cylinder with a hemispherical head welded to the bottom and a flanged hemispherical head bolted to its top. The inside diameter of the vessel is 154 inches (3.9 m) and the height 38.6 feet (11.8 m). [14] Reactor coolant enters the vessel through the inlet nozzles and flows downward toward the bottom of the core through the space between the core barrel and the vessel wall. From the bottom of the vessel, it flows upward past the core to the outlet nozzles. Both inlet and outlet nozzles penetrate the reactor vessel at the same elevation. In Westinghouse designs, instrumentation and control penetrations exist in the lower vessel head.

The vessel is made from carbon steel and is clad with stainless steel on all surfaces that are exposed to reactor coolant. The Haddam Neck pressure vessel is clad with stainless steel of 0.4 cm (5/32 in) minimum thickness. In addition, Haddam Neck is equipped with a stainless-steel thermal shield of 10.2 cm (4 inches) thickness.

Cuban V213

The reactor pressure vessel (Figure 4.2) is fabricated from sections of cylindrical forging of a low-alloy, high-strength steel with an inside diameter of 4.27 m (14 ft) and a height of 11.8 m (38.7 ft). These dimensions are similar to those of the Haddam Neck pressure vessel. The size of the vessel is limited by the requirement to be transportable by railway [4]. The forgings are welded circumferentially, with a hemispherical bottom. There are no circumferential welds in the active fuel region and no longitudinal welds. As in U.S. PWR designs, the reactor pressure vessel head is bolted on to complete the vessel pressure boundary and to support and locate the control rod drives. Protective stainless steel cladding 0.9 to 1.2 cm (0.3 to 0.5 in) thick is applied to the internal surface of the carbon steel vessel. [4,15]

As in U.S. PWR designs, penetrations in the reactor pressure vessel allow cooling water to enter and exit. Whereas U.S. PWRs have between four and

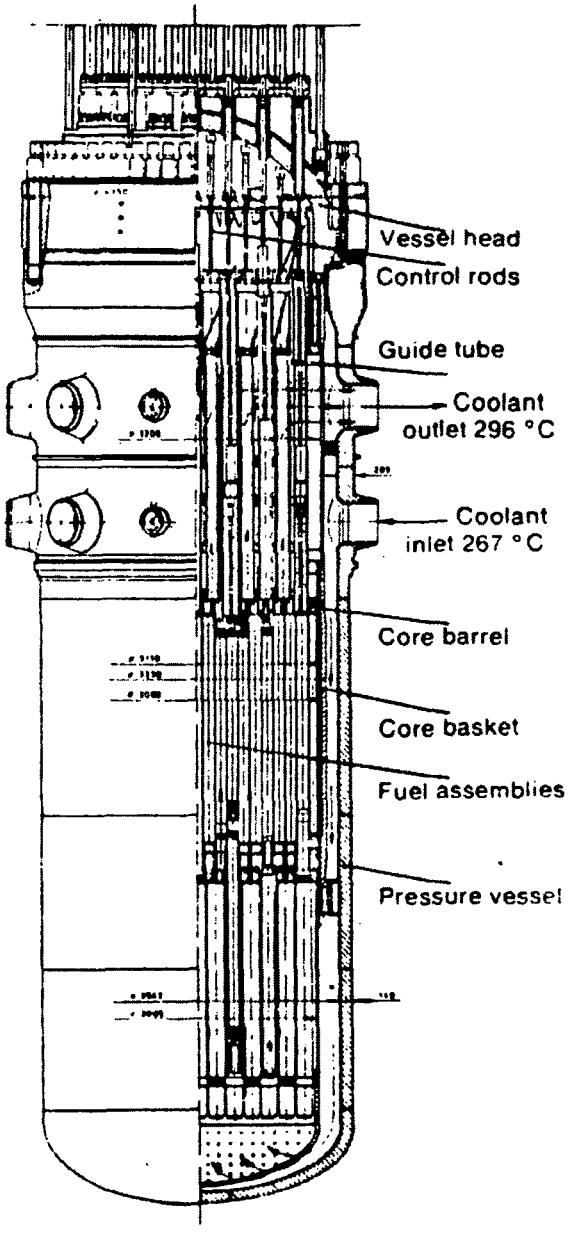

Figure 4.2. VVER-440 Reactor Pressure Vessel [24]

eight such nozzles, the Cuban V213 has 12 nozzles of 50 cm (20 in) diameter. In contrast to U.S. PWR designs, the nozzles for each VVER are at two different axial locations, with lower nozzles being coolant inlets and the upper being the outlets. [4]

Other structures of the vessel include an external support flange, the core barrel, and an internal core barrel centering socket. The external support flange rests on the vessel shaft support ring vessel support. The centering socket, which centers the core support barrel in relation to the reactor vessel, is welded to the inside bottom of the vessel. [4]

In contrast to most U.S. PWR designs, instrument and control rod penetrations in the VVER series are through the upper head only; there are no lower vessel head penetrations. [4]

Comparative Discussion

The absence of lower vessel head penetrations in the VVER reactor vessel as compared with their presence in most U.S. PWRs might affect the manner of reactor vessel bottom failure in event of a severe accident. The nature and significance of such possible differences have not been analyzed. Some indication of the differences may be gained from expected future analyses for Combustion Engineering reactor vessels (which have no lower-head penetrations) and their comparison with studies for Westinghouse vessels (which do).

The Cuban V213 pressure vessels have circumferential weld seams because the Soviets use sections of cylindrical forgings to avoid having vertical seams through the core. Since stresses across welds oriented in the axial direction are roughly double those across circumferential welds, these welds would be subject to less stress than the vertical welds in U.S. PWR vessels. The placement of the seams is such as to avoid the core region; however, even with perfect centering of the core, the two weld seams would receive substantial flux. Thus embrittlement has become a problem and the outer ring of assemblies has been replaced in certain VVERs to reduce the flux. No information was available as to whether the Cuban V213 cores have been redesigned to minimize this problem.

4.3 Reactor Coolant System

This section contains a general description of the features of the reactor coolant systems of both the Cuban V213 and the U.S. PWR. The major components of the reactor coolant system such as the pressurizer, reactor coolant system pumps, and coolant piping of the primary loop are generally comparable in size, design features, and functions and are therefore not discussed for each plant separately. However, there are substantial differences in the steam generator designs, which are therefore discussed separately.

U.S. PWR

Westinghouse reactor coolant systems consist of two, three, or four parallel heat transfer loops, each containing one steam generator and one reactor coolant pump; most Combustion Engineering systems, however, have two cold leg loops per steam generator, thus two reactor coolant pumps, although the steam generator is fed by only one hot leg loop. In each plant, a pressurizer is connected to one of the reactor vessel outlet pipes.

Each loop of the Haddam Neck plant can be isolated from the reactor vessel using motor-operated loop stop valves. A bypass line in each loop permits circulation within an isolated loop. A motor-operated valve is installed in the bypass line to prevent bypass flow during normal operation of the loop. When the reactor coolant system is operating with less than four loops, the isolated loop is protected from overpressure by a spring-loaded check valve located in the bypass line. [14] This feature is uncommon among U.S. PWRs.

The nominal operating conditions in the reactor coolant system for the Haddam Neck plant are (1) system pressure is 2050 psig at the pressurizer; (2) the total coolant flow is 101.5 x 10^6 lb/h (60,000 m^3/h); and (3) nominal reactor inlet temperature is 554.9°F (291°C) and 50.1°F (27°C) average temperature rise in the core; thus the hot leg temperature is roughly 605°F (318°C). [14] The total primary system volume, including pressurizer water at full power is 8132 ft^3. [14]

Cuban V213

There are six primary coolant loops in a Cuban V213 which, like Haddam Neck, have isolation valves that permit operation with one or more loops shut down (Figure 4.3). No information has been found regarding the mechanisms employed in the Cuban V213s to protect these loop isolation valves from pressure gradients or to provide for controlled circulation in the isolated loop once it has been isolated.

The expected operating pressure in the primary system is 12.26 MPa (1778 psi). The nominal coolant flow is expected to be in the range of 43,000 m^3/h (73 x 10^6 lb/h). The coolant temperature at the reactor outlet (hot leg) is 297°C (567°F) and at the reactor inlet 268°C (514°F), yielding a temperature rise in the core at 29°C (53°F). [15]

(a) Pressurizer:

The pressurizer for the Cuban V213 is a vertical vessel 44 m^3 (1554 ft^3) in capacity [15]; this is comparable to a typical Westinghouse or Combustion Engineering pressurizer, which has a capacity of 1800 ft^3 (51 m^3). The pressurizer (which maintains overall system pressure and compensates for changes in the volume of the primary coolant) is located between the reactor outlet nozzle and the outlet isolation valve in one of the loops. The pressurizer water volume under normal operation is roughly 60% of the capacity, which corresponds to 26 m^3 (930 ft^3) [15].

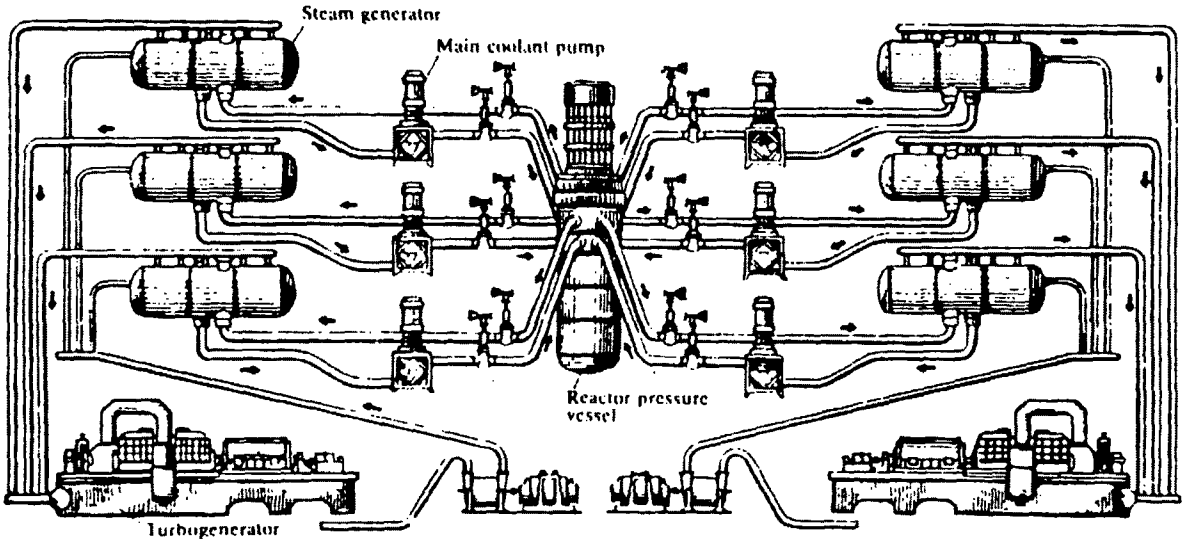

Figure 4.3. VVER-440 Reactor System

As with U.S. PWR designs, pressurizer pressure is regulated by a pressurizer spray at the top of the pressurizer, and electric heaters whose heating capacity in the Cuban V213s varies from 1500 to 1700 kW [15].

There is a manhole at the top of the Cuban V213 pressurizer with a two staged ladder to the bottom of the pressurizer for inspection and repair purposes. [4]

(b) Reactor Coolant System Pumps:

The Cuban V213 reactor coolant system pumps take intake fluid from the side, whereas typical U.S. PWRs have the intake on the bottom.

In order to increase the coast-down time of the reactor coolant pumps after loss of offsite power, electricity generated by the turbines during their rundown after turbine trip is supplied to the reactor coolant pump motors.

(c) Coolant Piping:

While the four Haddam Neck primary coolant piping loops have a diameter of roughly 68 cm (27 in), the six Cuban V213 pipes have a diameter of approximately 50 cm (20 in).

One major difference in the primary loop layouts is caused by the fact that U.S. PWRs have large vertical flow paths in the steam generator tubes that are not present in the Cuban V213 designs because the steam generator tubes are horizontal.

In addition, the Cuban V213 cold legs have different size loop seals from those of U.S. PWRs.

Comparative Discussion

The safety significance of any particular primary loop design can only be assessed by plant-specific studies. Nevertheless, the use of a greater number of smaller steam generators in loops that have smaller diameters and can be isolated are safety improvements, all other things being equal. This may be particularly true in light of the fact that the Cuban V213 plants do not appear to be otherwise particularly different from a small Westinghouse plant. Loop isolation valves are also valuable in the event of certain loss-of-coolant accidents, including a steam generator tube rupture, enabling termination, and therefore reduction of net outflow, of the leak through the break. The release of radioactive materials to the environment is thereby minimized.

The absence in the Cuban V213s of the large vertical hydrostatic head associated with the vertical steam generator tube alignment in U.S. PWRs and the different loop seal size will cause different primary loop thermal-hydraulic behavior once forced circulation is lost. Less driving force will be required to set up natural circulation convection, but since the flow would be operating with a lower driving head, flows could change direction or cease due to relatively smaller changes in temperature differential and therefore natural circulation would be expected to be somewhat more unstable.

These factors will also cause the behavior of the plant under small-break loss-of-coolant accident (LOCA) conditions to be different if the primary loop becomes largely voided, since (1) counter-current two-phase flow which would occur in a plant with vertical U-tube steam generators may not occur in the horizontal U-tube plant (depending on plant layout details not available to us) and (2) the loop seal plays a major role in small-break LOCA transient behavior. The impact of the differences, however, cannot be estimated without plant-specific analysis.

4.4 Steam Generators

U.S. PWR

All U.S. PWR steam generators are designed as upright cylinders containing tubes which have their axes vertical and are either U-shaped (Westinghouse and Combustion Engineering (C-E) plants) or straight through (Babcock & Wilcox (B&W) designs). Thus the secondary fluid flow is parallel to the axis of the tubes. All but one of the C-E plants have two U-tube steam generators. (Maine Yankee has three.) B&W plants have two once-through steam generators that are situated either raised or lowered with respect to the reactor vessel. In Westinghouse designs, the number of steam generators

varies with the size of the plant. Smaller plants have two steam generators; medium size plants have either two, three, or four steam generators; high-power Westinghouse reactors have four steam generators.

In U.S. PWRs, there is only one steam turbine per reactor. Hence, regardless of how many steam generators there might be per plant, they all feed into the same turbine at a steam pressure of about 1000 psia (6.9×10^6 MPa) and temperature of roughly 288°C (550°F).

The four Haddam Neck steam generators are vertical shell and U-tube evaporators with integral moisture separator. The reactor coolant flows through the inverted U-tubes, entering and leaving through the nozzles located in the hemispherical bottom head. The head is divided into inlet and outlet chambers by a vertical partition plate extending from the head to the tube sheet. Manways are provided for access to both sides of the divided head.

The maximum size steam line is 36 inches at the main steam header while the nominal diameter of the steam lines is 26 inches. The steam is delivered by the steam line from the steam generator through the containment and shield buildings and out through the main steam trip valves to the turbine. There are four self-actuating safety valves per steam line and a modulating atmospheric dump valve located upstream of the main steam trip valves to provide emergency pressure relief of the steam generators or for unit cooldown if the trip valves are shut and cannot be opened. [14]

Cuban V213

Each Cuban V213 unit has six horizontal steam generators (Figure 4.4) with an outside diameter of 3.34 m (131.5 in), a length of 12 m (472.4 in) and holds roughly 92 tonnes (92 tons) of water when full. Although such suspension is not shown in Figure 4.4, the steam generators are reportedly suspended from the ceiling to reduce the load imposed on the pipelines due to the thermal expansion of the generator. [6]

The steam generators contain submerged horizontal U-shaped tube bundles and produce steam at saturated conditions. Thus, in contrast to U.S. designs, the secondary fluid flows transverse to the tube axes. As in Westinghouse and C-E U-tube steam generators, as long as the tubes remain covered, the horizontal steam generators have a constant heat exchanger surface and a relatively constant heat transfer coefficient at all power levels (varying only with secondary flow rate). Thus as the power level increases, the differences between primary and secondary loop coolant temperature must increase to allow increased heat transfer. The primary coolant flow rate is not controlled in either VVERs or in U.S. PWRs. If the power level is to be reduced for a significant period of time, one or more loops of the VVER may be isolated and shut down. [4]

The ends of U-tubes expand and tie into header pipes (collectors) of 75 cm (2.5 ft) diameter and located vertically in the steam generator; the inlet side connects to the hot leg and the outlet side connects to the cold leg [6].

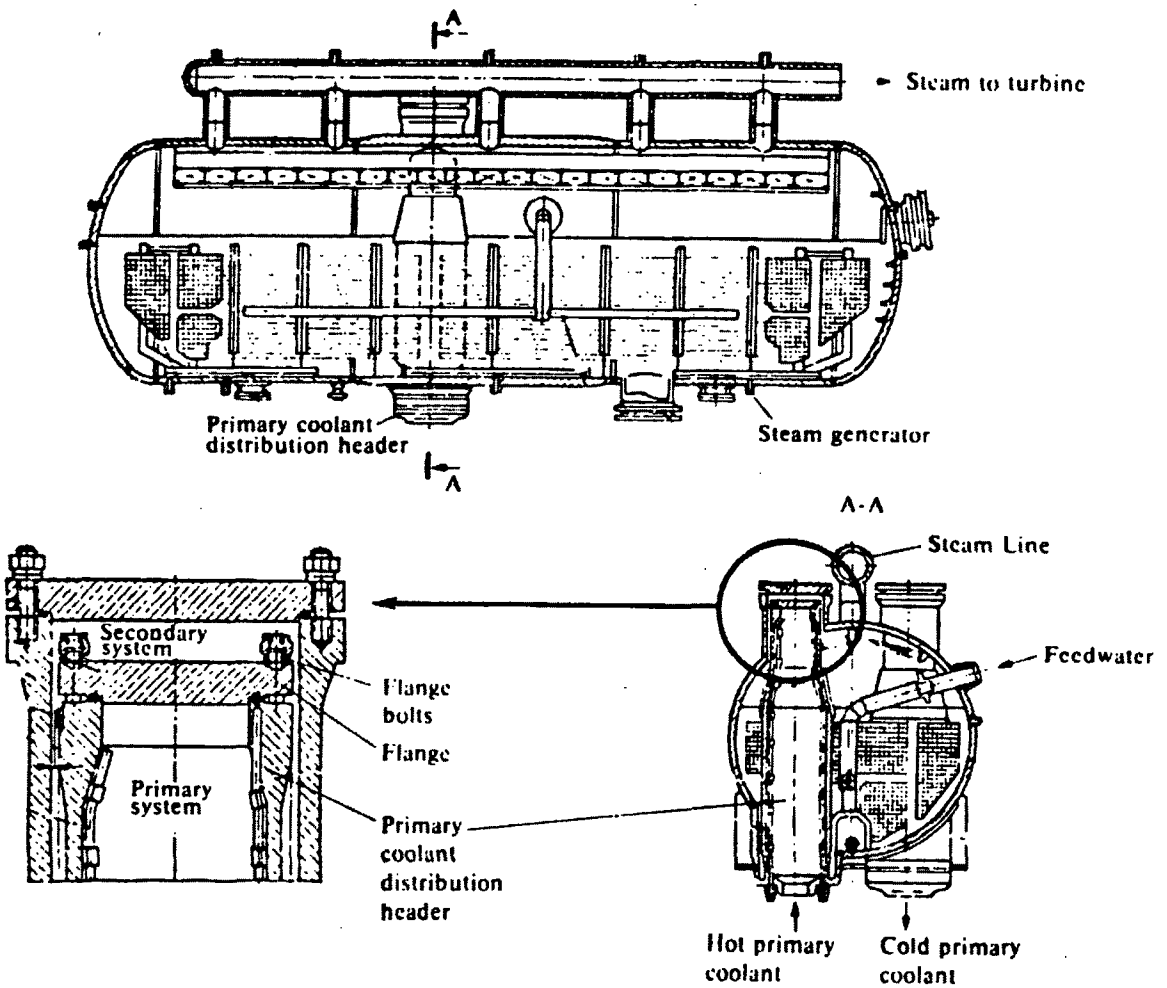

Figure 4.4. Horizontal Steam Generator

Each Cuban V213 is designed with two steam turbines. The steam is fed into the turbine at a steam pressure of 4.5 MPa (667 psia) and temperature of roughly 260°C (500°F). [15]

No information is available on the Cuban V213 main steam supply system; however, Figure 4.5 shows the schematic of the main steam system of VVER-440s using K-220-44 turbines. [4] Each Cuban V213 is designed with two K-220-44 turbines. This schematic shows the presence of safety valves, atmospheric dump valves together with throttle valves, block valves, stop valves, and control valves. The number of valves cannot be accurately determined from this simplified schematic diagram. The schematic indicates a capability to crosstie to the set of three steam lines that feed each turbine. Each turbine can process steam flow rate of 1350 tn/h. This corresponds to steam

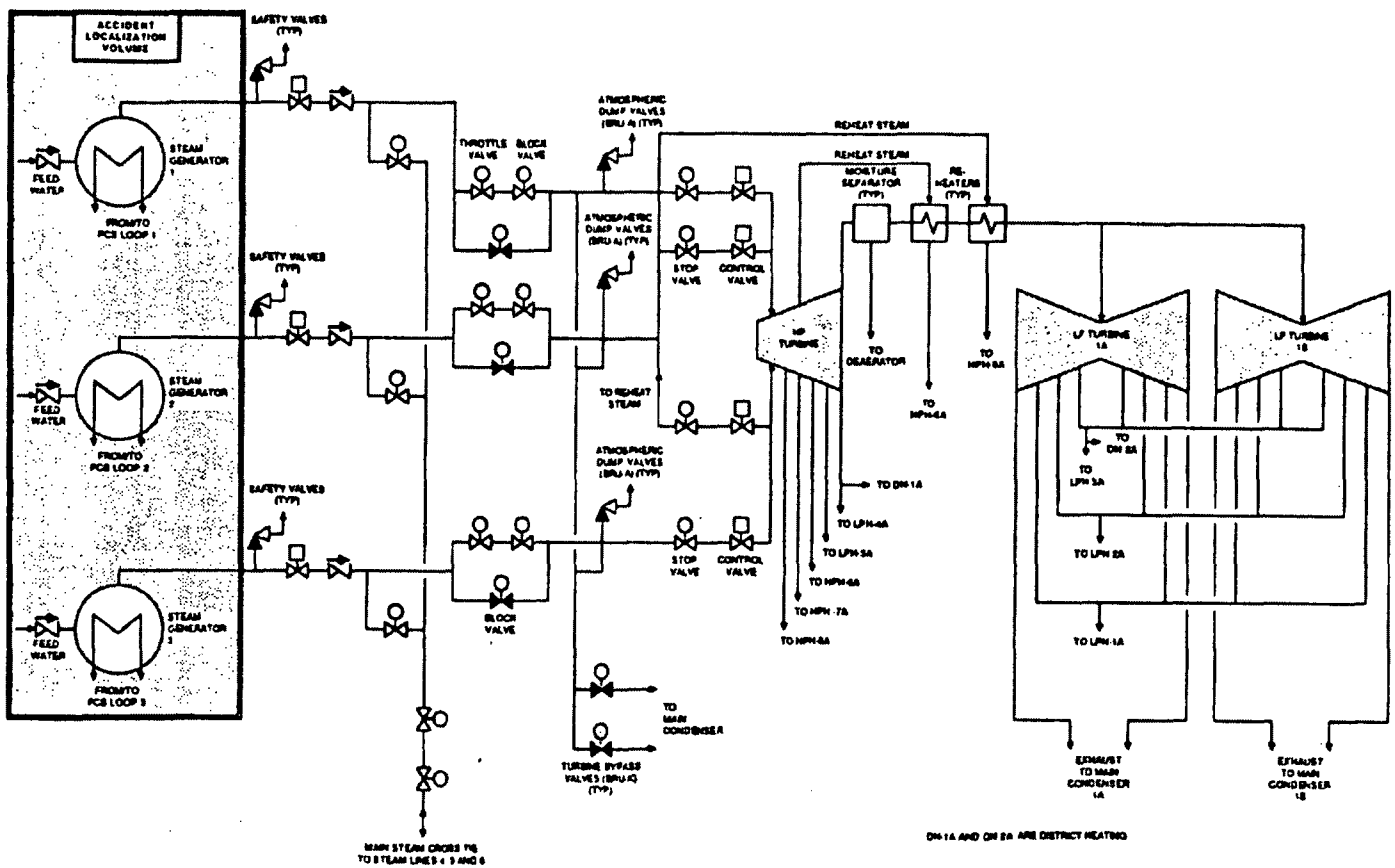

Figure 4.5. Simplified Schematic of Main Steam System of VVER-440 Using K-220-44 Turbine [4]

flow from three steam generators, each having a capacity of 450 tn/h at full power. [15]

Comparative Discussion

Because there are six steam generators, each having a liquid inventory of approximately 75,000 kg (200,000 lb) (as noted in Section 2.3.3, it is not clear whether this aggregate number includes fluid in the primary side, but in any case the secondary-side fluid is by far the major portion of this amount), the aggregate secondary-side inventory is much greater for the Cuban V213 than the inventory of a comparable power level Westinghouse plant. This greater inventory gives increased cooling capacity during loss-of-feedwater accidents, increased capability to establish natural circulation cooling, and greater ability to withstand station blackout. Similarly the presence of six reactor coolant pumps (RCPs) increases the probability that some forced circulation can be obtained in the event of certain loss-of-flow accidents. The loop isolation valves are valuable in minimizing offsite radiation in the event of steam generator tube rupture accidents. However, the fact that there are 12 main coolant lines (and the concomitant penetrations into the reactor vessel) coupled with the materials problems known to be present in VVER plants (see Chapter 6) [4,25] may increase the probability of a large-break loss-of-coolant accident (LOCA) of a reactor primary coolant pipe (50 cm (20 in) diameter) or a break in the steam generator collector (75 cm (30 in)).

Advantages of horizontal steam generators are the large evaporation surface between the liquid and steam, which enhances the natural circulation and ability to circulate coolant water without concentrating impurities, and the large volume of water, which makes a cooldown of the reactor in an emergency shutdown much easier.

There appears to be an advantage in having two turbines in that plant availability can be improved and there may be fewer outages due to repairs or service since the plant could be operated with only one of the two turbines on line.

In addition, because of the large inventory and the crosstie among the steam lines of the steam generators, it is possible that the rupture of a steam line inside containment could generate steam pressure greater than that obtained from the large-break LOCA. This is due to the fact that the primary loop contains approximately 370,000 lbm of water at roughly 290°C (550°F), whereas each steam generator contains roughly 200,000 lbm of water at roughly 260°C (500°F).

It is unclear whether the VVER steam generators are actually suspended from the ceiling or supported from below. It is also unclear as to the exact amount of secondary liquid mass in the steam generator.

4.5 Auxiliary Feedwater System

The auxiliary feedwater (AFW) system is normally operated during reactor shutdown until reactor conditions permit use of the residual heat removal system. In addition, the AFW system serves as a backup system for supplying feedwater to the secondary side of the steam generators when the main feedwater system is not available, thereby maintaining the heat sink capabilities of the steam generator.

U.S. PWR

In the Haddam Neck plant, the AFW system consists of two steam turbine-driven AFW pumps and one 100,000 gallon (380 m^3) capacity demineralized water storage tank. There is also one non-safety-grade motor-driven startup AFW pump. [14]

Cuban V213

Only limited data were available on the AFW systems of the VVER plants. The Cuban V213 has three AFW trains [2], each backed by a supplemental AFW pump with its own water source. It is reported that each train in the Cuban design includes an emergency diesel seismically qualified and especially designed for the humid Cuban climate [2].

Comparative Discussion

The AFW system of the V213 plants is comparable functionally to that of Haddam Neck, and, in addition, is designed to be used for long-term heat removal. Such systems may also be useful in recovery from severe accidents in which a closed primary loop can be established after the accident. The Soviet approach to long-term heat removal is to rely upon the deaerators, demineralizers, and process condensers on the secondary side. No information was available on this process.

4.6 Residual Heat Removal System

The residual heat removal (RHR) system is intended to operate after shutdown of the reactor and the primary pumps to enable the removal of decay heat and stored heat over the long term.

U.S. PWR

The design criterion of a Haddam Neck RHR system for normal shutdown operation is to bring the plant from RHR entry conditions of about 400 psig to a cold shutdown condition and maintain the reactor coolant temperature below 200°F (93°C). The RHR loop consists of two RHR heat exchangers, two RHR pumps, and the associated piping, valves, and instrumentation necessary for operational control. The RHR system is used in the plant shutdown mode when the reactor coolant system (RCS) pressure is below about 400 psig (2.7 MPa). Prior to placing the RHR system into operation, decay heat is removed by steam generator cooling; RCS feed and bleed cooling is available as an emergency alternative. [14]

The inlet line to the RHR loop starts at the hot leg of Loop 1, and the return line connects to the cold leg of Loop 2. Normally heat loads are transferred by the residual heat exchangers to the component cooling loop. [14] For example, each of the residual heat exchangers in the Haddam Neck plant is sized to remove one-half of the system heat load during plant cooldown. [14]

Cuban V213

Decay heat cooling of the Cuban V213s in the early phase is done by the primary cooling system, through the steam generators, with pumps running. Later cooling is by natural circulation using the steam generators, deaerators, and process condensers. Detailed descriptions are provided below.

The cooldown occurs in three phases (Figure 4.6) [20]. In the first phase, the steam-water phase of cooldown, steam from the steam generator is vented to the turbine condensers across the high speed vent to the condensers, which maintain the pressure in the secondary side system within the nominal range. During this phase, one such venting system remains operational and the rate of cooldown of the primary system is maintained at no more than 30°C/h (54°F/h). When the pressure in the secondary side system is about 1.6 MPa (230 psia), the steam generator secondary side is cooled by taking cold condensate from the process condenser. Throughout the entire steam cooldown regime, the reactor coolant pumps provide forced circulation of coolant in the primary coolant system. [20]

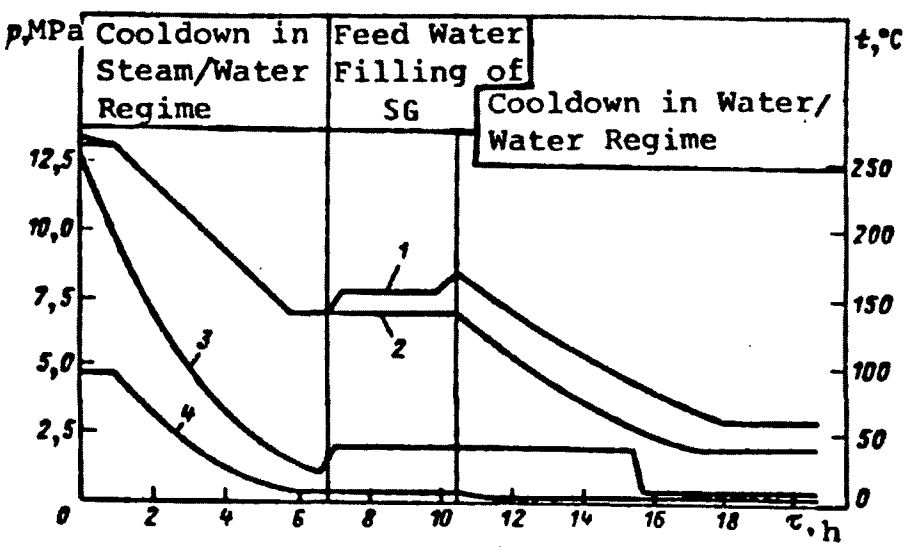

1-Coolant temperature at reactor outlet; 2-Coolant temperature at reactor inlet; 3-Primary system pressure; 4-Secondary system pressure.

Figure 4.6. Three Phases in Residual Heat Removal Process

The second phase of the cooldown begins when the mean coolant temperature reaches 140°C (284°F) by filling the steam volume of all steam generators with water from the deaerators using the emergency electric makeup pumps. The filling of the steam generator is carried out evenly over the course of 3.5 hours. The rate of cooldown during this phase is also maintained at no more than 30°C/h (54°F/h). The decay heat is removed by means of natural circulation of the coolant in the primary system. The steam generator elevation was selected to assure such natural circulation. [6] No information was obtained regarding where the heat removed by the steam generators is dumped during this phase of the cooldown. [20]

The mean temperature of the coolant is stabilized in the last cooldown phase. Cooling of the core takes place by natural circulation of the primary coolant through two loops. This phase of cooldown continues until a temperature of 60-70°C (140-158°F) is attained at the reactor exit. [20]

Comparative Discussion

In the U.S. PWR, there is a dedicated RHR system which makes use of the primary system and creates forced circulation conditions through the loops used. In the VVERs, the residual heat removal is accomplished by using the secondary side of the steam generator, and the core is cooled by natural circulation flow using any two loops. No information was obtained regarding where the heat removed by the steam generators is dumped.

4.7 Emergency Core Cooling System (Active and Passive)

The primary function of the emergency core cooling system (ECCS) is to remove stored heat and fission product decay heat from the reactor core during accident conditions by injecting borated water into the reactor coolant system.

U.S. PWR

The emergency core cooling systems for Haddam Neck consist of three separate systems, each with two trains: a high-pressure safety injection (HPSI) system capable of providing makeup flow for a spectrum of primary system leak rates; the charging system; and the low-pressure safety injection (core deluge) system (LPSI) [14]. Some plants (but not Haddam Neck) are designed to include, in addition, an accumulator (passive) injection system, which is designed to reflood the core in a loss-of-coolant accident. The emergency diesel generators ensure redundant sources of auxiliary onsite power and have adequate capacity for all ECCS requirements so that the loss of one component would not impair reliability of the system. [14]

The system is designed to accommodate a double-ended guillotine rupture of a main coolant line.

Cuban V213

The Cuban V213 incorporates three redundant and independent trains of ECCS, each consisting of both active and passive subsystems. The active system is

composed of both high- and low-pressure pump injection units for prolonged heat removal; each HPSI and LPSI has three independent groups with its own diesel electrical power supply; each LPSI has a pump, a borated water storage tank (BWST), and a heat exchanger for cooling water taken from the emergency sump of the steam generator well when operating in a recirculating mode. [15] The HPSI system is designed to remove decay heat equivalent to 2-3% of full power and delivers 65-130 m^3/h (2,300-4,600 ft^3/h) of boric acid solution. [20]

The passive ECCS has four hydraulic accumulators containing borated water pressurized to 6 MPa (870 psia) by nitrogen [20]. All four are connected through non-return valves to special branch pipes on the reactor vessel; two are coupled to a branch pipe at the RCS inlet side and the other two are connected at the outlet side. [20] These accumulators make up coolant losses when the pressure in the primary coolant loop drops to 4-6 MPa (580-870 psi) after a large coolant pipe break. [4]

Each train of the Cuban V213 ECCS includes an emergency diesel seismically qualified and especially designed for the humid Cuban weather. The diesel reliability, 95%, is consistent with worldwide standards. One of the three trains can be taken out of service for maintenance while the facility is at power, but only for three days.

The ECCS of the Cuban PWRs is designed to limit fuel clad temperature to less than 1200°C (2192°F) [20] in loss-of-coolant accidents up to and including the design basis accident, which is the break of a 50 cm (20 in) main coolant pipe. [2,3,24] To accomplish this, it is designed for the following functions: (1) makeup of coolant losses associated with the DBA from the circulating system at the rate of 300 m^3/h (1,060 ft^3/h) at 0.4-0.6 MPa absolute (58-87 psia) [20]; and (2) insurance of continued removal of residual heat from the core after reactor shutdown [15]. For improved reliability, this system is designed with double or greater redundancy and each component has its own power source. No details were obtained regarding any of the foregoing.

Comparative Discussion

The Cuban V213 ECCS systems appear to be designed to accommodate similar events as Western PWRs, and would be, therefore, expected to have similar mitigating impact. Both systems contain redundant high- and low-pressure injection systems and inject borated water. As in some U.S. PWRs, the Cuban system contains a passive ECCS. Both systems have backup emergency diesel generators. The design approach of both systems is to limit the peak fuel clad temperature.

4.8 Redundancy and Diversity of Equipment

U.S. PWR

10CFR50 Appendix A [26], General Design Criteria, requires that all engineered safety feature equipment be built with adequate redundancy. All electrical systems must be redundant to ensure continued supply of power. In some instances functional diversity is built in.

In addition, in order to reduce risk from anticipated transients without scram (ATWS) events, U.S. NRC regulation, 10CFR50.62, requires that:

1. Each PWR must have equipment from sensor output to final actuation device that is diverse from the reactor trip system to (a) automatically initiate the auxiliary (or emergency) feedwater system and (b) initiate a turbine trip under conditions indicative of an ATWS. This equipment must be "independent (from sensor output to the final actuation device) from the existing reactor trip system," and

2. Each PWR manufactured by C-E and B&W must have a diverse scram system from the sensor output to interruption of power to the control rods.

The station electrical power systems are also designed to provide a diversity of dependable power sources that are physically separated. The station electrical power systems consist of (a) the unit, (b) preferred AC power system, (c) the power distribution system, (d) the standby AC power system, and (e) the 120v AC power system. [14]

The standby AC power source has two independent diesel generators as the on-site source of AC power to the emergency service portions of the power distribution system. Each onsite source provides AC power sufficient to safely shut down the reactor, maintain safe shutdown conditions, and operate station auxiliaries, including the ECCS equipment, necessary for station safety. [14]

Cuban V213

Redundancy is built into many of the auxiliary and emergency systems. Tables 3.1 and 4.1 list these systems. In addition, each reactor block is provided with three separate self-contained power supply systems, each comprising a diesel-electric set intended to supply power from intermittent power supply sources at intervals lasting several dozens of seconds. [15] Continuous power supply is furnished by a storage battery, and there are three such batteries. There is a backup storage battery as a standby power source for energizing reactor control and protection system electric drives.

Comparative Discussion

Although the extent of implementation of redundancy is unclear from the information examined in this study, it is clear that the principle of use of

redundant systems is being utilized in the Cuban V213 plants.

Table 4.1. VVER-440 Auxiliary Systems

Number of makeup high-pressure pumps	3
Delivery, m^3/h	50
Capacity of condensate tanks, m^3	2 x 500
Boron concentrate tank capacity, m^3	2 x 70
Number of condensate pumps	4
Delivery, m^3/h	2 x 8; 2 x 60
Number of boron concentrate pumps	4
Delivery, m^3/h	2 x 8; 2 x 50
Number of pumps serving ion exchanges	2
Delivery, m^3/h	2 x 50

Source: Atomenergoexport [15] - Nuclear Power Stations with VVER-440 Reactors

4.9 Other VVERs

In this section, following the order of the preceding presentation, those features of other VVERs that differ significantly from those of the Cuban V213 are cited.

Fuel Assemblies and Control Rods

In the V230 design, 273 assemblies are fixed and 73 are movable control assemblies or shims. The shim assembly performs emergency and planned shutdowns of the reactor by pulling the fuel section from the core and inserting the absorber. [4]

The VVER-1000 fuel assembly is also configured in a hexagonal bundle containing both fixed burnable control rods (1% by mass of natural boron in a zirconium alloy) and movable control rods. [4]

The design burnup for the fuel at Loviisa was 28,600 MWd/MTU (and the goal for VVER-1000 fuel is to achieve 40,000 to 50,000 MWd/MTU). [23]

The VVER-1000 fuel management scheme is less efficient than in the U.S. reactor, principally because the design water-to-fuel ratio through the fuel assembly channels is low. This ratio is roughly 1.6 in the VVER-1000 and about 2 in U.S. reactors. Thus, for the same burnup, higher enrichment is required in the VVER-1000 reactor than in a comparable U.S. reactor [23].

No information was available as to the extent of fuel failure problems in VVER fuel, although fuel rod buckling was reported not to be a problem for Loviisa. Fuel failure can take several different forms, such as buckling, cracking, rupture, etc., due to vibrations, high burnup, etc. Potential fuel failure problems, therefore, are related to the core and fuel designs and fabrication technology, including welding technology and metallurgy, which have been reported to be a problem. Harder neutron spectrum (estimated 1.5 x 10^{20} n/cm^2) for the neutrons of energies higher than 1 MeV at Loviisa over a period of 30 years [8] versus 2.5 x 10^{19} n/cm^2 at the Haddam Neck plant operating at 1473 MWt at a load factor of 0.9 during a 30-year plant life [14]) can result in embrittlement of the core and vessel materials at Loviisa faster than that would occur at the Haddam Neck plant operating at a comparable power level.

Reactor Vessel

V230 series vessels have no cladding. [4] While the VVER-440s have 12 nozzles, the VVER-1000s have eight nozzles of 85 cm (33 in) diameter.

Reactor vessel embrittlement is occurring faster than expected in several VVER-440s, and the outer ring of assemblies has been replaced in certain VVERs to reduce the flux.

Reactor Coolant System

The VVER-1000 has four primary coolant loops, instead of six in the VVER-440s.

The first VVER unit at Rheinsberg, a 70 MWe V203, had fast acting valves having a hydroactuator, but this was excluded in the subsequent designs as it was found to be ineffective. Thus, VVER-440s use slow closing valves. In keeping with this practice, the first VVER-1000 installed in Novovoronezh Unit 5 was also equipped with isolation valves. However, the primary coolant system isolation valves were eliminated in subsequent VVER-1000 units since the expected increase in unit availability was not realized [4].

No information has been found regarding the mechanisms employed in VVER systems to protect these loop isolation valves from pressure gradients or to provide for controlled circulation in the isolated loop once it has been isolated.

Steam Generator

There have been reports of cracking of the welds in the steam generators. This was detected at Loviisa and Bohunice-3 [25,28]. Although in neither plant were cracks detected during routine inspections, welds in general have been identified as a serious weakness.

Due to the fact that VVER-440's decay heat is removed through secondary circuit, at Loviisa, there are more systems of safety grade in the secondary circuit than usual. Some of them have been located in the turbine building, which sets safety requirements on this building [8].

Auxiliary Feedwater System

The European V213 series has two auxiliary feedwater (AFW) pumps, each backed up by a supplemental AFW pump with its own water source. The VVER-1000 series has three parallel and independent AFW systems.

At Loviisa Unit 2, Imatran Voima Oy caused installation of two complete parallel AFW pumping systems, in place of the usual single system [8], implying that at least up to that date V230s had only a single AFW system.

For short transients, any deficiency in the AFW system in the V230 series plants is in large part compensated by the very large secondary-side inventory of such plants, giving them considerably more time than a comparable U.S. PWR before loss of secondary fluid is problematic. Thus, the absence of redundancy in a particular plant would have an important impact only on the long-term coolability of the plant.

Residual Heat Removal System

It appears that the minimal makeup capability of the V230 is also available for long-term cooling, including the possibility of recirculation of water from the sump system.

Emergency Core Cooling System

The V230 design does not include a dedicated ECCS, but uses the makeup water system to partially fulfill this function. There appears to be only one pump for this purpose; it can compensate a primary system leak rate of about 100 m^3/h (3500 ft^3/h) at nominal pressure, although no pump characteristics were made available. [4]

The absence of an ECCS in the V230 system means that it is not capable of dealing with the fluid losses accompanying the break of a main coolant line. Thus the scenario for a large-break LOCA in a V230 series plant would inevitably lead to core uncovery and meltdown. When coupled with the relatively small containment volume and its pressure retention/rupture disc design, this system would have containment failure early in a large-break LOCA scenario and should be expected to have extensive atmospheric releases.

For the VVER-1000, the design basis accident is the break of a 85 cm (20 in) nozzle. Three independent core cooling systems are incorporated in the VVER-1000 series and the high-pressure safety injection (HPSI) and low-pressure safety injection (LPSI) pumps can draw water from the sump system. The VVER-1000 passive injection system (accumulators) actuates when the primary pressure drops to between 4 and 6 MPa (590 and 870 psig). LPSI commences prior to full emptying of the accumulators, and will pump borated water from the borated water storage tank for 15 to 30 minutes, after which water is drawn from the sump [24]. Although the accumulator tanks reside inside the containment, major components of the ECCSs, including the high- and low-pressure pumps, are located inside the unsealed area beneath the containment. Major components of the containment spray systems such as the spray pumps are also located in the unsealed portion. This arrangement minimizes the length

of pipe and cable runs and allows inspection of the emergency systems. [4]

Redundancy and Diversity of Equipment

At Loviisa, the reactor scram system has two times 2 of 3 logic and the plant protection system, which actuates the safety features, has 2 of 4 logic (Cuban V213s have 2 out of 3 protection logic). In addition, one of the most important preventive features of Loviisa is the multitude of the AC power backup (four diesel generators, gas turbines on site, separate 20 kv and 110 kv transmission lines to two hydropower plants, and two 400 kv power lines to the national grid). [8] In addition to redundancy, the Finns also implemented diversity by installing four sets of battery groups [29]. Containment isolation failures will be prevented by ensuring electricity supply of isolation valves also in the total blackout case. A separate emergency feedwater building will be constructed to reduce the risk of total loss of feedwater.

The engineered safety features at Loviisa have two redundancies. Most of the active components of the safety systems, pumps, and valves have been doubled to increase the reliability of the safety systems, and thus the safety.

CHAPTER 5. INSTRUMENTATION AND CONTROL SYSTEMS

The instrumentation and control systems monitor and provide indication, recording, and automatic regulation of variables necessary for the safe and orderly operation of the plant. These systems provide the operator with all information and controls needed to start up, operate at power, and shut down the plant. They further provide means to cope with all abnormal operating conditions.

5.1 U.S. PWR

The safety designs of U.S. nuclear power plants make use of the defense-in-depth principle of reactor safety by providing overlapping and redundant echelons of defense, so that, in spite of failures, public safety is ensured. For reactor instrumentation systems, the echelons of defense are (1) scram system, (2) engineered safety feature actuation system, and (3) control system. [30] The first two systems comprise the protection systems that provide automatic actions to protect the plant in the event normal plant operating limits are exceeded. The control system provides the capability to regulate and control power level, neutron flux, and the functioning of the plant equipment.

Federal regulations contained in 10CFR50 [26] Appendix A, General Design Criterion 24 entitled "Separation of Protection and Control Systems" express the concern that these systems need to be separated to ensure that common failures do not cause control system failures to jeopardize protection system actuation.

Two important approaches to carry out the defense-in-depth principle are (1) diversity in safety signals and equipment to achieve a reduced probability of functional failure as a result of common mode failures, and (2) redundancy in equipment providing backup systems.

The safety instrumentation therefore consists of independent multiple (redundant) channels to ensure system flexibility while maintaining plant safety at all times. A highly reliable (and redundant) source of electrical power is provided to ensure safe and reliable plant operation with the instrumentation.

Reactor Protection System

The reactor protection system (RPS) initiates safety actions to prevent abnormal operating conditions from occurring by monitoring the following:

1. Neutron flux
2. Reactor coolant parameters
3. Secondary plant parameters.

The engineered safety features (ESFs) are provided to mitigate the consequences of postulated accidents including a LOCA resulting from large and small pipe breaks. The ESF control systems regulate the operation of the ESF systems following their initiation by the RPS. These are [6]:

1. Emergency core cooling

   a. High-pressure safety injection
   b. Charging system
   c. Low-pressure safety injection
   d. Residual heat removal

2. Auxiliary feedwater
3. Primary containment isolation
4. Containment heat removal (containment air circulation and cooling system)

The ESF systems also serve to maintain the integrity of the containment structure.

Reactor Control

Two modes of reactor control are provided. Long-term regulation of core reactivity is provided by adjusting the concentration of boric acid in the reactor coolant. Short-term control for power changes or unit trip is provided by means of control rod movement.

There are three basic modes of control that may be used in a PWR:

1. Constant T_{ave} (average reactor coolant system temperature)
2. Constant steam pressure
3. Sliding T_{ave} - combination of 1 and 2.

Smaller PWRs in the U.S. use the constant T_{ave} approach, some PWR designs use a constant steam pressure control, and most large PWR control systems use a sliding T_{ave} control system [31]. A disadvantage of constant T_{ave} control is that it produces unacceptable secondary system steam conditions. It has the advantage of minimum rod movement. A constant steam pressure control produces excellent steam conditions for all loads from zero to 100% load. Disadvantages are that excessive rod motion is required and reactor hot leg temperature (T_h) can approach saturation values. The sliding T_{ave} control produces acceptable steam conditions at full load while requiring less rod motion and lower T_h than a constant steam pressure control.

5.2 Cuban V213

The following information is based upon general and limited information obtained on VVERs; no Cuban V213 specific data were obtained.

Reactor Protection System

The reactor and vessel instrumentation system is directly interfaced to the emergency protection and to the control systems. The Cuban V213s, as in European V213s, will use a two-out-of-three protection logic. Input signals for the emergency protection system are transmitted from three groups of emergency signal sensors, which are self-contained; that is, the sensors have their own power sources and they are physically separated from each other. They are also distributed among different compartments along the routes of cables from different channels of the emergency protection system. This is intended to ensure that at least two channels will remain intact if one of the compartments experiences damage. [2]

The use of signal splitters (see Figure 5.1) would cause the result that if a given channel fails, its signal will fail for the other channels as well. Thus, the trip signals actually generated from these three channels are not totally independent. [2]

Electronic computers are expected to be incorporated into the Cuban V213 control system, enabling continuous control, signaling, and calculation of thermo-technical, nuclear physics, mechanical, electrical, and chemical process parameters characterizing operation of a plant.

The same sensors are used in most cases for both the emergency protection and the control system. However, the components used in protection and control systems are not standardized to the same degree as is the equipment in the hydraulic and mechanical systems. This variability is due primarily to efforts to use the state-of-the-art components that are available when these systems are integrated into the design. In some VVER-440s outside (and possibly inside) the Soviet Union, control components, systems, and subsystems were designed and provided by Western nations. [2]

Reactor Control

Similar to the U.S. PWR control scheme, the mode of reactor control utilized by recent VVER designs tends to use a combination of two basic control strategies to provide the proper balance between the primary and secondary coolant systems:

1. Constant primary T_{ave} - this was used in the earlier VVERs.
2. Constant steam pressure to the high-pressure turbine. This was used in some later designs.

The power level of the particular unit determines the degree of weight given to each parameter.

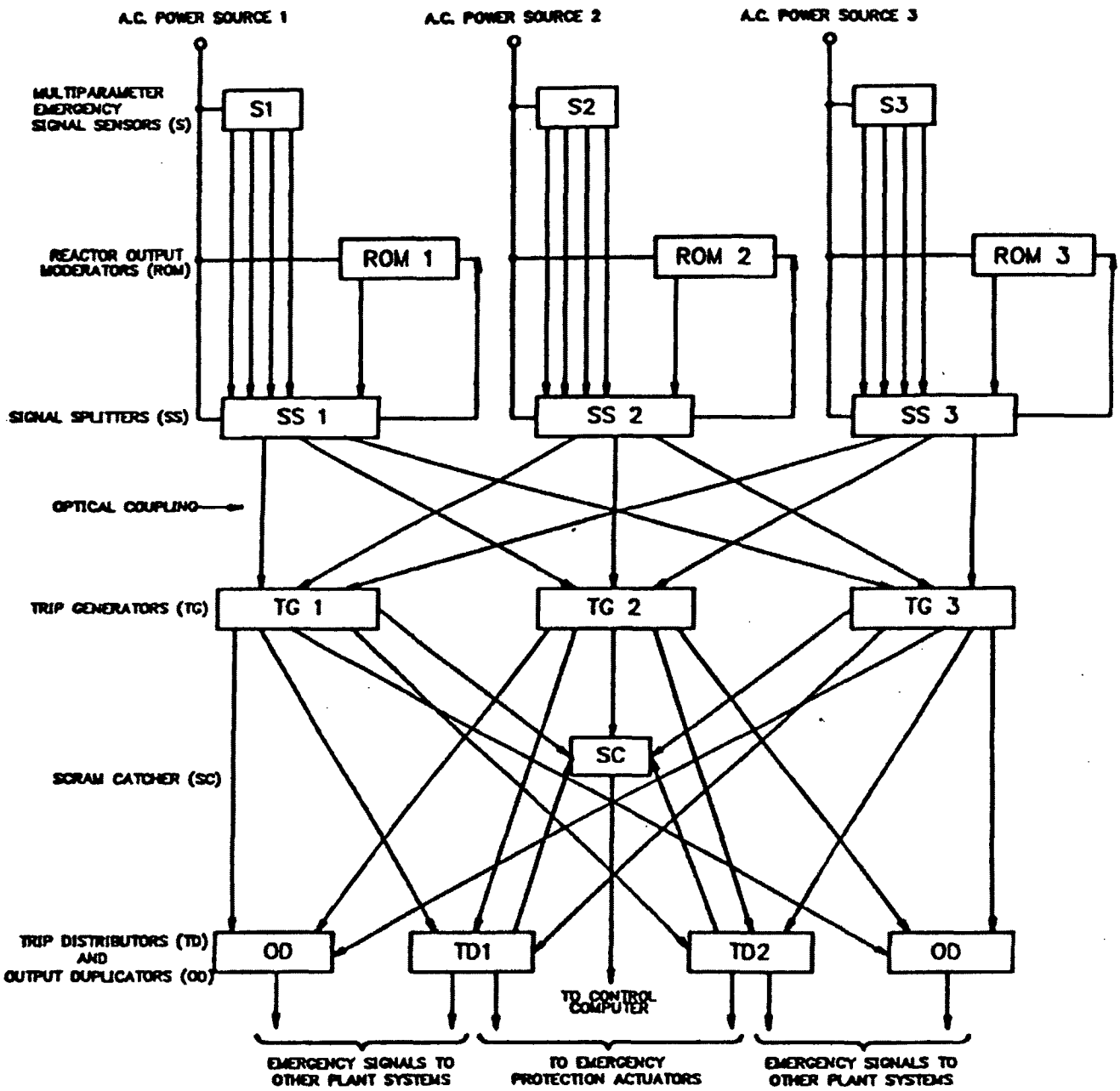

Figure 5.1. Signal Flow for VVER-1000 Emergency Protection System [4]

5.3 Comparative Discussion

Figure 5.1 illustrates that V213 and VVER-1000 systems share reactor protection and reactor control signals or other control-protection interconnections, raising the potential for common mode failures to defeat the protection system. (This issue is not unique to VVERs, but has also been raised for certain U.S. PWRs [24].) We have no data to indicate that this issue has been raised or is of concern in USSR.

No specific information regarding the expected diversities and redundancies of the Cuban V213 plants was available.

If the Soviet's decision to rely entirely on mechanical control rods for power and reactivity control includes elimination of boric acid from the safety injection fluid, they may have difficulty controlling reactivity insertion resulting from overcooling transients. In Haddam Neck the reactivity insertion in such transients is terminated by the injection of boron. [14]

CHAPTER 6. OPERATING EXPERIENCE

In this chapter brief descriptions of the VVER-440 operator training, operating experience, maintenance practices, and equipment failure data are presented. These descriptions were obtained for other VVERs, since the Cuban V213s are still under construction.

6.1 Operator Training

The Cubans will be trained in the USSR, and the Soviets will start up the plant and maintain a presence and some degree of control for 1 year. [3]

A training simulator for VVER-440 units is being built in Hungary by KFKI (Central Physical Research Institute) and Paks of Hungary, with the cooperation of Nokia Oy of Finland, and is expected to be completed in 1988. Ontario Hydro has offered to help build training simulators for the newer 1000-MW VVERs which are planned to be built in Hungary. [32]

The State Committee for Supervision of Nuclear Power Safety (USSR-NRC), the Soviet equivalent of USNRC, gives examinations to the facility director, associate director, and chief engineers. In turn these facility/station directors administer examinations to the shift supervisors and senior reactor operators/reactor operators with participation by the USSR-NRC. Every 2 years all personnel must be requalified. Tests are administered more frequently for those who fail. [2]

The Soviet practice in enforcement is to hold individuals responsible. This should be contrasted to the U.S. practice of holding the utility company responsible (though individuals have been held responsible in exceptional circumstances). The management and the USSR-NRC can fire personnel.

6.2 Maintenance

Each unit is shut down after the first year for 3 months of maintenance. Thereafter, each unit is shut down for extensive maintenance every 4 years. [2] The plant management organization is responsible for the maintenance and repairs of all units at the site, including the building and structures. The frequency of specific maintenance and repair activities is regulated by policies based on preventive maintenance and repair and service as needed. The key parameter used in scheduling preventive maintenance and repair is the equipment's total inservice time, whereas the need to perform repair is determined by the technical condition of the particular equipment. [4]

Manned shielded cabins are used for inservice inspection and repair of the

VVER reactor vessel. The shielded cabins are designed to protect the plant personnel from radiation and heat exposure while performing the scheduled inspection and repair work inside the pressure vessel of a shutdown reactor. Using these shielded cabins, operators can repair defects on the surface by grinding, milling, drilling, or welding. These cabins have been used to take samples from the internal surface of a V230 vessel using special cutters for analysis to monitor the radiation-induced embrittlement of the pressure vessel. In addition, remotely operated lightweight shielded cabins equipped with video cameras are used for inspection of the primary loop nozzles and piping. [4]

6.3 Equipment Reliability

6.3.1 Equipment Failures

Design weakness of a plant may be apparent in equipment failure data and in changes in plant operational procedures or design that were implemented after the plant began operation. Although detailed data are not readily available for equipment failure on VVERs, Table 6.1 shows, in percentages, the distribution of equipment failure characteristics for VVER-440 power plants as reported by the IAEA in 1987 based upon data that appear to run through 1983 [33].

Of these failures, 11.3% were attributed to nuclear power plant (NPP) specific items while the remaining 88.7% are non-nuclear equipment. The author noted that analysis of equipment failure data established that approximately 32% of the failures were due to weld defects and 28% due to hidden defects in materials. The most characteristic faults were leaks in condenser pipes, sealing failures in high- and low-pressure heaters, overheating of turbine brushes, pipe seal failures in the secondary system, steam generator tube failures, and incorrect operation of the protection and interlock system. Commencing in 1983, a uniform inspection system was implemented in the Soviet Union to monitor the state of primary and secondary system piping. [33]

An IAEA report notes [33] that operating standards in the Soviet Union do not permit operation if more than 1% of the fuel pins are not gastight or more than 0.1% have failed cladding.

A special working group was formed in Finland in 1980 to utilize the operating experience gained with other nuclear power plants. The group is comprised of representatives from the two nuclear utilities and the Technical Research Centre of Finland (VTT). The group meets regularly to examine all available incident reports, and selects for close examination the ones that seem to be significant with respect to the Finnish nuclear power plants and their conditions. Some observations have already led to actions at the Loviisa plants. Operating and emergency instructions have been checked, and questions concerning material properties of components have been clarified. The most important thus far have been reports on sticking safety valves and on potential for cracks in the connecting rods of the emergency diesels. [33]

Table 6.1. Distribution of Equipment Failures and Defects in Soviet VVER-440 PWR Power Plants* [33]

Equipment Group	Number of faults unit/year	Faults as % of total
Primary Circuit Equipment		
Reactor	5	4.3
Steam generator	4	3.4
Main circulation pumps	2	1.7
Main shutoff valves	1	0.9
Pipelines	1	0.9
Total for Group	13	11.3
Turbo-Unit Equipment		
Turbines	1	0.9
Condensers	3	2.6
Separators and steam superheaters	3	2.6
Regenerative heaters	6	5.2
Total for Group	13	11.3
Pump Equipment of All Types	9	7.8
Fittings (excluding main shutoff valves)	10	8.7
Ventilation assemblies	7	6.1
Compressor assemblies	4	3.5
Total for Group	30	26.1
Electrical Equipment		
Turbogenerators	1	0.9
Electrical drives of pumps	3	2.6
Electrical drives of regulating equipment	2	1.8
Switches and circuit breakers	9	7.8
Total for Group	15	13.1
Control and Measuring Instruments and Automatic Equipment		
Primary instruments	9	7.8
Secondary instruments	23	20.0
Communication lines	12	10.4
Total for Group	44	38.2
Overall Total	115	100.0

* Since a standard approach for collecting data was adopted in the USSR in 1977, it is assumed that this table does not contain data prior to that date.

A 1984 report [28] indicated the following as the most significant events at the Loviisa plants:

(1) Inadvertent opening of a steam generator safety valve at Loviisa Unit 1 due to a failure in a pressure signal conversion unit (1978). The valve was manually closed, but the SG level had declined far enough that AFW pumps had been started.
(2) High-pressure safety injection (HPSI) actuation at Unit 2 due to instrument malfunction causing the opening of a turbine bypass valve and consequent primary system overcooling (1981).
(3) Deficiencies found in the attachments of pipe hangers to the concrete (1979). This required a 3-week shutdown for remedial actions.
(4) Pressure vessel radiation embrittlement in Unit 2 found to be occurring faster than anticipated. The plant was shut down to install 32 dummy assemblies in the outer ring to decrease potential pressurized-thermal-shock (PTS) problems (1980).
(5) Weld failures in steam generator tubes. These failures led to a 5-month extension of shutdown in 1980 to inspect and repair such tube welds and to examine potential similar faults in loop isolation valves. We have no indication whether any such faults were found.

One Czechoslovakian paper [11] described an incident at Nuclear Power Plant (NPP) V-1 (Bohunice) Unit 2 in January 1985 identical to the inadvertent HPSI actuation described above for Loviisa. This incident was also caused by failure of instrumentation (in this case pressure sensors in the steam lines) causing inadvertent opening of the turbine bypass, resulting in substantial primary system overcooling and triggering the HPSI. Thus this transient may be generic to the VVER-440 and could be a source of potential pressurized-thermal-shock (PTS) problems.

6.3.2 Issues Related to Materials and Welding

As noted in Table 6.1, a majority of failures and defects (60%) are attributable to material and welding properties.

One of the major reasons for the frequency of problems with welds is the relatively small size in which certain components are initially manufactured which must later be welded to make up the end product component. This is necessitated by the Soviet requirement for rail shipment of all reactor components. These components are welded in-situ without receiving the same heat treatment that would be implemented for initial manufacturing.

As discussed earlier, the relatively high anticipated neutron fluence expected at the reactor pressure vessel wall couples with the relatively high copper content of the Soviet steels to cause radiation embrittlement of the VVER pressure vessels to be a serious problem. However, this problem may have been alleviated for those newer VVER pressure vessels that may have avoided a high copper content, in light of knowledge of its ill effects that became available in the 1970s. (Some older U.S. plants share this potential problem.) This is an area where further information would be useful. The reactor pressure vessels are reported to be fabricated of seamless

cylindrical forgings welded together by circumferential welds at axial locations just above and just below the active core region, placing those welds in positions of relatively high fluence. The operators of both the Loviisa and the NPP V-1 (Bohunice-1) in Czechoslovakia have made fuel loading changes designed to reduce the neutron fluence, as well as operational changes designed to reduce the thermal shock to the welds.

The PTS problem may have less of an impact for VVERs since, unlike the U.S. reactor pressure vessels which have vertical welds, VVER pressure vessels only have circumferential welds. Therefore cold water entering the vessel from a cold leg runs perpendicular to the welds rather than parallel as it does in U.S. PWRs.

CHAPTER 7. SPECIAL TOPICS: SAFETY ANALYSES AND TESTS

In this chapter, papers containing special topics important to understanding of the Cuban V213s are reviewed and summarized. The most important of these are two papers written by Bukrinskij et al. analyzing the performance of the bubbler-condenser pressure suppression system: one relating to the Cuban V213 and the other relating to the European V213. No other paper addresses safety analyses or tests for the Cuban V213 directly, but several present information that can be useful in examination of the Cuban V213.

The vast majority of open literature is related to the Loviisa plants. These papers cover important issues, operating experience, and experimental data.

7.1 Bubbler Depressurization System Analysis

7.1.1 Cuban V213 Containment Analysis [18]

The paper presents results of a pressure response analysis performed with the BESM-4 computer using the plant nodalization in Figure 7.1. The accident examined was the "maximum credible accident": an instantaneous rupture of a 50-cm-diameter cold leg pipe. Calculated pressure responses are shown in Figure 7.2. Only limited information was contained in this paper regarding the accident assumptions such as performance of the emergency core cooling system. The calculated scenario is described below.

During the pressurization phase, vaporization of the escaping coolant raises the pressure in the localization compartments. Within 0.5 second, the calculated pressure in the shaft exceeded the value corresponding to the water level in the bubbler tanks and the water lock was displaced from the bubbler tubes. This started the steam-air mixture bubbling through the water layer in the bubbler tanks. During this period, the steam was predicted to be completely condensed. The air and other uncondensed gases entered the space above the water, and, through orifices, entered into the dome of the containment, causing the containment pressure to rise. Bubbling continued as long as the pressure differential between the shaft and the air space in the bubbler tanks was greater than the pressure corresponding to the water level in the tanks. After approximately 6 seconds, the air pressure in the bubbler towers and the pressure in the upper containment were computed to be equilibrated.

During the first second of the accident the passive sprinkler system was actuated, but the discharge rate of condensed medium from the passive sprinkler was not sufficient to condense the vapor formed from the coolant. By the end of the coolant discharge (approximately 25 seconds), the vapor

flowrate decreased, and the discharge of condensing fluid from the passive sprinkler became sufficient to initiate reduction of the pressure. At this point, the pressure in the localization volumes began to drop, the pressure differential across the bubbler units decreased, and the pressure in the upper part of the containment became greater than that in the localization volumes.

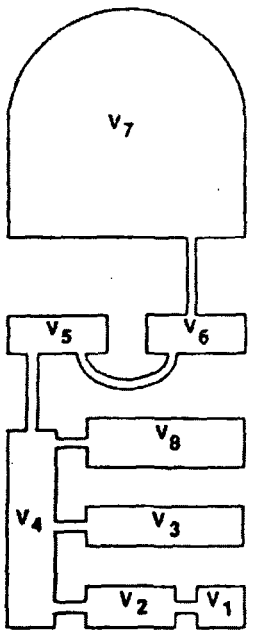

V	VOLUME (CUBIC METERS)	FLOW AREA (SQUARE METERS)							
1	1090		60						
2	2180	60			40				
3	3250	4			40				
4	2350		40	40		23			1
5	2350				23		60		
6	2000					60		14	
7	43000						14		
8	6200				1				
	V	1	2	3	4	5	6	7	8

THE FLOW AREA BETWEEN VOLUMES 4 AND 8 INCREASES TO 8 SQUARE METERS AT A PRESSURE DIFFERENTIAL OF 0.03 MEGAPASCALS (4.4 POUNDS PER SQUARE INCH).

VOLUME	LOCATION
1	PART OF REACTOR ENCLOSURE WHERE PIPE RUPTURE OCCURS
2	REMAINING PART OF THAT HALF OF THE REACTOR ENCLOSURE WHERE PIPE RUPTURE OCCURS
3	OTHER HALF OF REACTOR ENCLOSURE
4	CONNECTION TO SHAFT
5	SHAFT TO BUBBLER UNIT WATER LINE
6	ABOVE BUBBLER UNITS
7	OPERATING PORTION OF CONTAINMENT

Figure 7.1. Cuban V213 Plant Nodalization

After about 1 minute, the water from the active sprinkler system began to enter the localization volumes, and within 2 minutes, a vacuum was created in these rooms (approximately 0.09 MPa absolute (13 psia)). This negative pressure differential was maintained for a prolonged period by the active sprinkler system. The pressure in the upper part of the containment was maintained at roughly 0.125 MPa (18 psig).

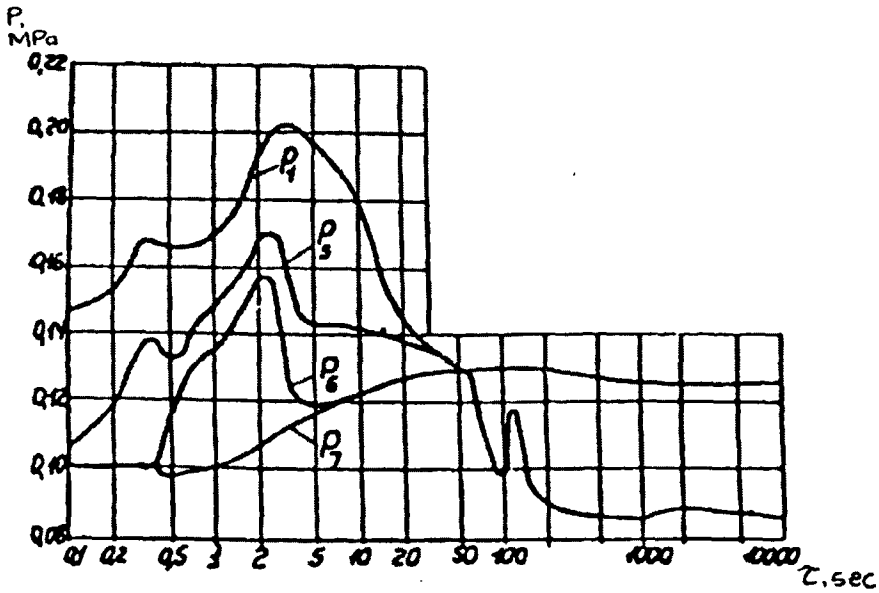

Figure 7.2. Calculated Pressure Responses in Cuban V213 Containment

Assuming a daily leakage between the dome and the localization volumes equivalent to 0.1% of the volume of the localization volumes, the relative vacuum is computed to be maintained for more than 100 days. (We note that information gathered by a U.S. team indicates that this vacuum may be conservatively estimated to be maintained for 3 days and has a 10-day best-estimate [2]) The release of radioactivity into the environment is predicted to occur only during the first 2 to 3 minutes of the accident while the damage to fuel elements is expected to be minor. Thus the computed radiation release is minimal.

Experimental verification of the operation of bubbler and passive sprinkler systems was reported to have been conducted with a full-scale model using 92% of the nominal steam flowrate of 8.6 kg/m^{3}s. No details of results are available.

7.1.2 European V213 Bubbler-Condenser System Analysis [19]

The plant nodalization for this analysis is presented in Figure 7.3. Similar to the Cuban analysis results, the end of LOCA and the end of a pressurization phase are computed at about 25 seconds. However, a relative vacuum was not created in the localization compartments until roughly 10-12 minutes after the accident initiation, instead of 2 minutes for the Cuban reactors. This appears to be related primarily to the fact that the Cuban V213 has the entire dome into which gases exiting the bubbler-condenser can be released, whereas the European V213 has only the limited volumes above and

adjacent to the water trays. Depending upon the size of the leaks in the airtight enclosure, a vacuum was computed to be maintained in the accident localization volumes of the European V213 for 40 to 50 hours.

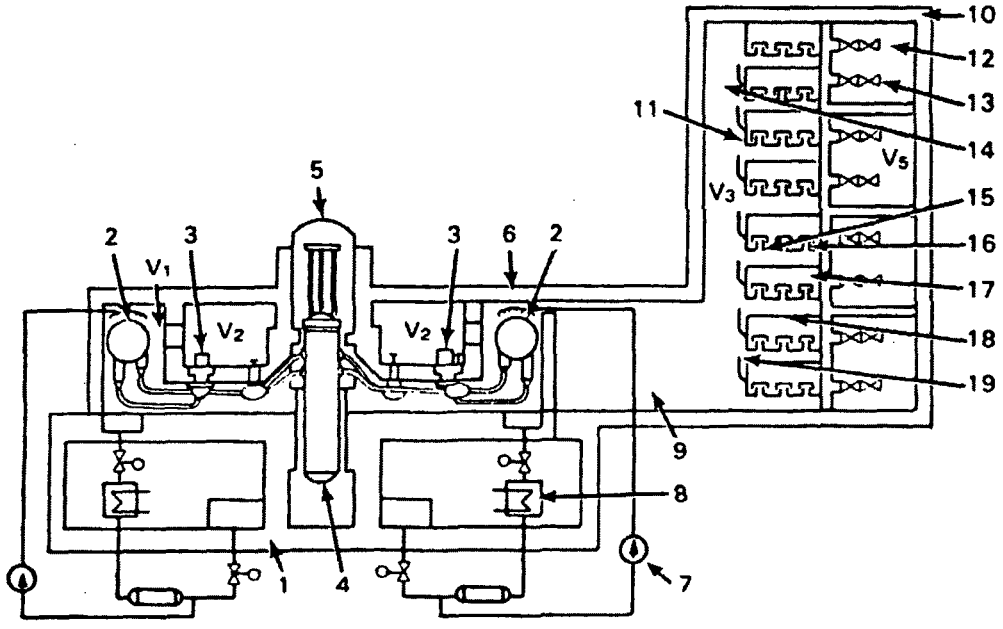

1-Reinforced concrete walls and floors; 2-Steam generator; 3-Primary coolant pump; 4-Reactor vessel; 5-Protective shielding cap; 6-Sprays; 7-Spray system pump; 8-Heat exchanger cooler for water drawn from sump; 9-Tunnel connecting steam generator compartment with bubbler-condenser tower; 10-Outer concrete wall; 11-Suppression pool system at each level; 12-Air trap volume; 13-Check valve; 14-Shaft convecting steam and air levels; 15-Water tray; 16-Steam channels; 17-Deflector cover tray; 18-Plenum region cover; 19-Overflow discharge.

Figure 7.3. European V213 Plant Nodalization

The pressure response in all five volumes (see Figure 7.4) are, as one would expect, different (generally higher peak pressures) from those computed for the Cuban V213. As with the Cuban V213 analysis, only limited information was presented regarding the accident assumptions.

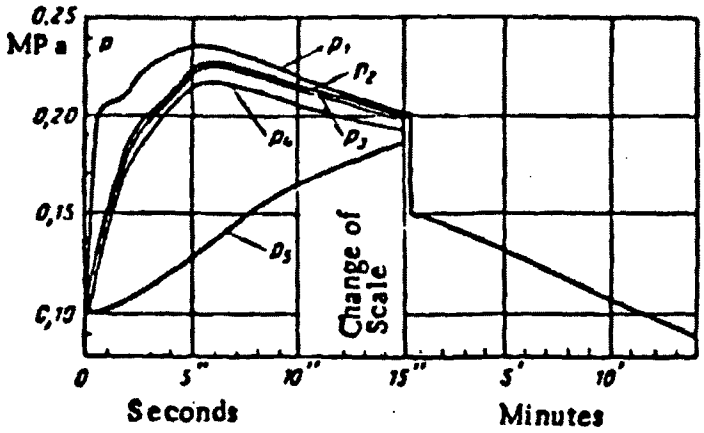

Figure 7.4. Calculated Pressure Responses in European V213 Containment

7.1.3 Safety Significance

The value of the addition of the dome to the Cuban V213 plant is evident in the lower pressure in the bubbler-condenser (and dome) during the bulk of the accident. This is due to the fact that the steam and other gases which are not condensed by the bubbler-condenser system in the Cuban V213 system can escape to the dome whereas such gases simply build up in the bubbler-condenser system in the European V213 system. The pressure buildup is mitigated somewhat in the European V213 by the fact that the bubbler-condenser has a larger volume and contains more water than does the Cuban V213.

7.2 Consideration of Effects of Hydrogen at Loviisa [20]

One important advantage of the Loviisa ice-condenser is the relatively low design pressure. This feature, however, as discussed below, is a drawback from the point of view of the ability of the containment to withstand the consequences of hydrogen combustion.

After the TMI accident, the Loviisa plant owners were required by Finnish authorities (as were U.S. ice-condenser plant owners by the U.S. NRC) to analyze the consequences of the generation and combustion of hydrogen from metal-water reactions involving 75% of the fuel cladding material. This would lead to a uniform hydrogen concentration of only about 8.4% in the Loviisa containment since it is exceptionally large. Two different studies were started by November 1985. One of the two objectives of the studies was to estimate the ultimate pressure-retaining capability of the various parts of the containment, steel shell, concrete structures, penetrations, air locks, etc.; the other objective was to estimate the pressure and temperature peaks due to hydrogen burning. These analyses are discussed in more detail

in the subsections below.

Several options were considered for prevention of hydrogen combustion or mitigation of the consequences: inerting, fogging, Halon injection or igniters. The first three options were ruled out for the following reasons: (1) inerting the large Loviisa containment is impractical because of maintenance inconveniences and risks, (2) fogging would require a redesigned spray system delivering very small droplets, and (3) Halon injection would tend to increase the containment pressure and at high temperatures the Halon would decompose, producing highly corrosive compounds. [22]

Therefore, a hydrogen igniter system for controlled burning was selected and installed in 1982, after analysis was performed in cooperation with Westinghouse, using MARCH and CLASIX computer codes.

7.2.1 MARCH Analysis for Loviisa [34]

Imatran Voima Oy, the utility that owns and operates the Loviisa plants, performed analyses to ascertain consequences of burning large quantities of hydrogen released into the containment. Different accident scenarios leading to hydrogen releases to the containment from metal-water reaction involving 75% of fuel cladding material, as required by the Finnish safety authorities, were analyzed using the MARCH computer code. The response of the containment to controlled burning of hydrogen from such releases was estimated using the CLASIX computer code. The purpose of this effort was to confirm a need for planned installation of hydrogen igniters in the Loviisa containment.

Three accident sequences for MARCH analyses (Table 7.1) selected were as follows: (1) a small leak (two-inch pipe break); (2) a double-ended cold leg break with inoperable high head and low head emergency core cooling; and (3) concurrent loss of onsite and offsite power. The following table summarizes the overall results of those analyses.

Table 7.1. Accident Sequences of MARCH Cases

Event Sequence	Time, minutes Case 1 Small Break	Case 2 Large Break	Case 3 Power Loss
Steam Generator Dry-out			404
Core Uncovery Initiation	41	1.5	756
Initiation of Core Melt	67	19	798
Core Slump	91	38	818
% of Clad Reacted before Core Slump	69	22	73

Three CLASIX analyses were performed in order to determine the effect of variation in the hydrogen release rate and the effect of the operation of air circulation fans between the upper and lower compartments.

The volume percentage of hydrogen needed for ignition was assumed to be 8.0%; 85% of the hydrogen was consumed in each burn. The volume percentage of oxygen required for ignition was assumed at 5%. Flame speed was chosen at 1.8 m/s (5.9 ft/s).

The analysis indicated that hydrogen was ignited in the lower and upper plenum of the ice-condenser, in the lower compartment, and in the separate rooms located near the lower compartment. No burns were computed to take place in the upper compartment. In every case the pressure increase was well below estimated containment failure pressure of 325 kPa absolute (47.1 psia) and only in the most severe Case 3 slightly above design pressure 170 KPa absolute (24.6 psia) (the highest value was 191 KPa absolute (27.7 psia) in the dead-ended volume). The analysts reported that the maximum temperatures in some volumes became much higher than the design values during hydrogen burns; however, the duration of the peaks was at most a few minutes. The highest temperature computed was 823°C (1513°F) in the dead-ended volumes, which may be the localization volumes or the volumes below the localization volumes, and the ice-condenser upper plenum was computed to reach 698°C (1288°F). Although the design temperature was not reported, the design temperature of the lower compartment (i.e., the area below the deck) for the Sequoyah containment, whose free volume is much smaller, is roughly 270°F (132°C) based upon steam line break analysis as a design basis.

The conclusion was that the containment would not fail unless the overpressure exceeded 0.225 MPa (32.6 psia). This is to be compared with the design overpressure of about 0.7 bar (roughly 10 psi). Thus, the design includes considerable margin. However, in the event of postulated large hydrogen releases and subsequent burning, the integrity of the containment could not be guaranteed since the calculated overpressure was, assuming complete combustion, about 3.3 bar (47.9 psia), clearly exceeding the estimated failure pressure.

7.2.2 Filtered Venting Considerations for Ice-Condenser Containment [22]

Calculations with the CONTEMPT code, performed at the Technical Research Center in Finland, indicated a definite mitigating influence of the containment spray on the pressure and temperature peaks ensuing from hydrogen burns. The uncertainties associated with the results were, however, reported to be large.

Slow overpressurization sequences become important after the following three containment failure modes have been ruled out: (1) containment isolation failures and bypass sequences; (2) early catastrophic containment failures; and (3) basemat melt-through. Overpressurization occurs when decay heat energy cannot be removed from the containment and/or when noncondensible gases are produced by a core-concrete attack. The production of non-condensible gases is low for the basaltic type of concrete used at Loviisa. As long as there is ice left in the ice-condensers, the steam generated by an

accident is condensed. This is predicted to result in a delay of 5 to 15 hours in the onset of pressurization. The low reactor power and the high containment free volume of the Loviisa plant make pressurization slow. Furthermore, the amount of concrete structures inside the containment is very large, which results in a high specific heat capacity slowing pressurization.

The freestanding steel containment presents the potential for depressurization during such scenarios by external cooling of the containment surface. This cooling could be achieved by either effective ventilation of the space between steel and concrete wall or by installation of an external spray system. The required cooling rate is only about 3 MW. Analytical results indicate that the spraying rate of 25 kg/s (55 lb/s) would be sufficient to limit the containment pressure. The drawback of the external spray, however, is that an installation of a fairly complicated nozzle system is required above the steel containment to guarantee wetting of all the dome surface.

Another method for management of a pressurization accident would be the use of filtered containment venting, which was computed by the Finns to reduce the containment pressure to about 1 atmosphere (14.5 psia). However, the pressure was computed to become very unstable, and small changes in steam condensing capacity and temperature would result easily in subatmospheric pressures. This would create the following problem. The Loviisa containment is equipped with vacuum breaker valves for underpressure protection. This system was not, however, designed for the cases of reduced air pressure. The flapper valves are of large diameter and designed to open with very small pressure differences, and therefore leaktightness after multiple operation is questionable. The Finnish analysts concluded that no decision to implement filtered venting should be taken without careful analysis since, despite the potential advantages, there is a danger that the ice-condenser containment could lose its integrity through subatmospheric pressure conditions. Thus any implementation would need to be preceded by a thorough risk/benefit analysis.

7.3 Experimental Studies of Behavior of Loviisa Containment Sump

The behavior of the containment sump in LOCA conditions has been studied at the IVO Hydraulic Laboratory to identify screen geometries that would not plug during such accidents (see Table 7.2).

7.4 Experiments and Analysis Concerning Pressurized Thermal Shock

The pressurized-thermal-shock (PTS) problem can occur in PWRs for transients in which there is severe overcooling of the vessel concurrent with or followed by repressurization. The thermal stress that accompanies the overcooling is compounded by the pressure-induced stress. This process has been said to result in initiation or propagation of a crack through the vessel wall of sufficient extent to threaten vessel integrity.

Experiments on thermal mixing and stratification in the primary piping were carried out and analyzed by Finnish researchers with REMIX to investigate potential PTS problems (see Table 7.2). [9]

Other safety-related tests performed at the hydraulic laboratory for the benefit of Loviisa, VVER-440 and VVER-1000 [35,36] are also listed in Table 7.2.

Table 7.2. Safety-Related Tests Performed by the Finns [35]

1976	Dropping of Spent Fuel Container in Storage Pool	Loviisa
1976	ECCS Performance: Sumps, Sprays (LOCA, Long Term)	Loviisa
1979 - 80	Containment Sump Behavior (LOCA, Long Term)	Loviisa
1980	Behavior of Loop Seals (Small-Break LOCA)	Loviisa
1983 - 85	Thermal Mixing in Cold Leg and Downcomer (Pressurized Thermal Shock)	Loviisa VVER-440
1984 -	Counter Current Flow Limitations (Large-Break LOCA, Reflood)	VVER-1000 General
1984 -	Ice-Condenser Tests (LOCA, Steam Line Breaks)	Loviisa
1984 -	Loop Seal Tests (Small-Break LOCA)	VVER-1000
1985 - 86	Thermal Mixing	General
1986 - 87	Aerosol Scrubbing in a Water Pool (Severe Accidents)	Loviisa
1987 -	Ice-Condenser Drain Tests (Steam Line Breaks)	Loviisa

7.5 Safety Evaluation of NPP V-1 (Bohunice-1) Unit Modifications in Czechoslovakia [11]

As part of their effort to improve the operational safety of their two V230 units, the Czechs have modified their operational procedures and physical configurations, supported by safety analysis. The analyses performed to

support changes in the procedures were: small and medium loss-of-coolant accidents caused by pressurizer spray piping rupture, stuck-open pressurizer safety valve, steam generator tube rupture, steam generator collector leakage, excessive steam release due to malfunction of the steam generator safety valves, steam line break, and loss of reactor coolant flow. Details of the analyses were not provided; however, the paper mentions two key parameters, the departure from nucleate boiling ratio (DNBR) and clad temperature during a reactor coolant pump coastdown and a reactor coolant flow reduction by 15%.

In order to address a possible pressurized-thermal-shock problem, three modifications were made: (1) installation of 36 shielding steel assemblies around the periphery of the core, (2) increasing the temperature of the emergency cooling water to 55°C (131°F), and (3) installation of quick-acting valves on steam lines between steam generators and steam header.

The Soviet system codes DYNAMIKA and MOST 7 were used to analyze plant steady state and transient behaviors. For the large-break LOCA, the RELAP4/MOD5 has been used, among other computer codes, to perform thermal-hydraulic calculations.

7.6 Other Analyses and Tests

In addition to the system safety analysis, the Finns have been assessing reliability of the Loviisa plants through probabilistic risk analysis. [37,38] These analyses take human factors into consideration in efforts (1) to identify weak links that may affect the risk of the plant, (2) to assess the need and possibilities of improvements, (3) to identify alternative approaches for mitigation of accidents, (4) to identify factors affecting human reliability, (5) to assess reliability of operators and maintenance actions, and (6) to develop data for future use.

There are indications that the Hungarians have performed a series of safety tests and analyses. Both Hungarians and Bulgarians have access to the U.S. NRC's RELAP4/MOD5 computer code to perform their safety analyses [4,32]. The Hungarians are considering a change in rod control strategy due to results of rod ejection accident analyses. Detailed descriptions of their analyses or tests were unavailable for review.

REFERENCES

1. Proceedings from the Hearing before the Subcommittee on Energy, Nuclear Proliferation, and Government Processes of the Committee on Governmental Affairs, U.S. Senate, June 30, 1986.

2. "Report of a Trip to the U.S.S.R. by a U.S. Government Nuclear Safety Team March 2-13, 1987," compiled by H.B. Schechter (USNRC).

3. "Report of a Trip to the USSR by an NRC-DOE Nuclear Safety Team March 2-13, 1987," prepared by R.W. Barber and F.X. Gavigan (USDOE).

4. "Overall Plant Design Description VVER Water Cooled, Water Moderated Energy Reactor," DOE/NE-0084, Revision 1, U.S. Department of Energy, October 1987.

5. "World List of Nuclear Power Plants," Nuclear News, Vol. 30/No. 10, American Nuclear Society, August 1987.

6. Construction of Nuclear Power Plants, edited by V. Dubrovsky, Mir Publishers, Moscow, USSR, 1979.

7. "IAEA Safety Codes and Guides (NUSS) in the Light of Current Safety Issues," B. Regnell, IAEA-SM-275/7, 1984.

8. "Backfitting Actions at the Loviisa Nuclear Power Station," M. Komsi and R. Ahlstrand, Imatran Voima Oy, IAEA-SR-112/31, November 1985.

9. "Thermal-hydraulics of the Loviisa Reactor Pressure Vessel Overcooling Transients," H. Tuomisto, TVO-A-01/87, Imatran Voima Oy, 1987.

10. "Experiments and Analyses of Thermal Mixing and Stratification During Overcooling Accidents in a PWR," H. Tuomisto, 24th ASME Heat Transfer Conference, August 9-12, 1987.

11. "Safety Evaluation of NPP V-1 Units Modifications," J. Misak, V. Polak, J. Filo (CSSR), IAEA Seminar, November 11-15, 1985.

12. "Trip Report: Central and Eastern Europe," Memorandum from F.M. Bernthal to Chairman and Commissioners of NRC, January 12, 1988.

13. "USSR-German Accord Foresees Help in ECCS, Containment Venting," Nucleonics Week, Vol. 28/No. 18, p.1, April 30, 1987.

14. Final Design Safety Analysis/Final Safety Analysis Report, Haddam Neck Plant, Connecticut Yankee Atomic Power Company, Rev. May 1987.

15. "Nuclear Power Stations with VVER-440 Reactors," Atomenergoexport (undated, received 1987).

16. "State of the Art of Reactor Containment Systems, Dominant Failure Modes, and Mitigation Opportunities," NUREG/CR-4242, R & D Associates, January 1985.

17. Discussions with the Russian Scientific Delegate at U.S. Nuclear Regulatory Commission, October 25, 1987.

18. "A Bubbling Depressurization Containment System for Limiting the Consequences of Nuclear Power Plant Accidents in a Vacuum Containment Shell," A.M. Bukrinskij et al., IAEA-CN-39/116, 1981.

19. "A System for Damage Control after Rupture of Main Pipelines in Nuclear Power Plants with VVER-440 (Water-Moderated Water-Cooled Power Reactors)," A.M. Bukrinskij et al., Teploenergetika, All Union Heat Engineering Institute, 1978.

20. "Nuclear Power Plants with VVER-440 Reactors," V.V. Zverkov and Y.I. Ignatenko, BBK 31.47 Z-43, Nuclear Power Plant Operation Library, 1987 (NRC translation No. 1988).

21. "The Dukovany Nuclear Power Plant," F. Dobias, D. Mateju, and A. John, translated in February 1988 (NRC translation No. 1944).

22. "Filtered Venting Considerations of an Ice Condenser Containment," H. Tuomisto, Seminar on Containment of Nuclear Reactors, SMiRT-9, August 24-25, 1987.

23. "Assessment of the Impacts of Transferring Certain Nuclear Reactor Technologies to the Soviet Union and Eastern Europe," J.W. Upton, Jr., PNL-X-765, 1987.

24. "Description of WWER Safety & Safety Support Systems," S. Novak, IAEA Lecture 35.2.4, 1987.

25. "Steam Generator Cracking Keeps Czech Unit Down for Two Months," Nucleonics Week, Vol. 28/No. 23, p.4, June 4, 1987.

26. Code of Federal Regulations, Title 10 Parts 0 to 199, Revised January 1, 1987.

27. "VVER - Description of VVER Power Plant Systems, Components, Layout, Safety Features Experiences from Operation and Maintanance," S. Novak, IAEA Lecture 2.5, Yugoslavia, 1985.

28. "Nuclear Power Plant Safety Related Experience in Finland," A.J. Rastas and B.A.O. Regnell, a draft report dated August 16, 1982.

29. "Cooperation between Finland and the USSR in the Field of Nuclear Engineering," P. Simola, Imatran Voima Oy, Finland, 1979.

30. "A Defense-in-Depth and Diversity Assessment of the RESAR-414 Integrated Protection System," NUREG-0493, March 1979.

31. "Fundamental Course Manual: Pressurized Water Reactors," Inspection and Enforcement Training Center, U.S. Nuclear Regulatory Commission, offered in 1981.

32. "No Hurry to Backfit Existing PWRs in Hungary, Official Claims," Nucleonics Week, Vol. 28/No. 26, p.8, June 25, 1987.

33. "Safety and Reliability in Nuclear Power Plant Operation," S. Novak, IAEA, 23 April 1987.

34. "Analysis of the Effects of Hydrogen Burning and Measures Taken for Their Mitigation at the Loviisa Nuclear Power Plant," B. Regnell and S. Helynen, IAEA-TC-427.6, 1983.

35. "Loviisa Specifics," letter from P. Skytta (Imatran Voima Oy) to G. Sege (NRC) with 24 attachments, September 10, 1987.

36. "Large-Scale Air/Water Flow Tests for Separate Effects during LOCAs in PWRs," H. Tuomisto, Nuclear Engineering and Design, No. 102, 1982.

37. "Plant-Specific Reliability and Human Data Analysis for Safety Assessment," K.E. Jankala, J.K. Vaurio and U.M. Vuorio, IARA-CN-48/78, 1987.

38. "Objectives and Methods of Reliability Data Collection and Analysis at Loviisa Power Plant," J.K. Vaurio, presented at Workshop on Probabilistic Safety Assessment as an Aid to Nuclear Power Plant Management, Organisation for Economic Co-operation and Development, Brighton, UK, 1986.

39. "Skoda Won the First Contract for Bulgaria's Belene Nuclear Power Plant," Nuclear News, Vol. 31/No. 5, April 1988.

40. "Buyers Participation and Well Developed Domestic Infrastructure-Keys to Successful Introduction of Nuclear Power in a Small Country," K. Numminen and P. Laine, IAEA-CN-42/34, Vienna, September 1982.

41. "Design Basis Accident Analysis," B. Regnell, Imatran Voima Oy, October 1987.

APPENDIX A

VVERs: List and Historical Background

A.1 Historical Background

The Union of Soviet Socialist Republics (USSR) commissioned its first commercial pressurized water reactor in late 1963 at Novovoronezh in USSR. This first unit, designated the VVER-210, was followed by a second prototype, a 365 MWe version, which became operational in late 1969. From these prototypes, the Soviets developed a standardized 440 MWe (1300 MWt) nuclear power plant, designated the VVER-440 model V230. The first V230, Novovoronezh Unit 3, began power operation in 1971. The V230s have no containment building. A later model VVER-440 designated the V213, introduced in the late 1970s, incorporated some design modifications and containment-like structures. The first V213 was placed in service in 1982 at Rovno 1 in Kuznetsovsk, USSR. In addition to the V230 and the V213, two VVER-440 reactors which house the model V230 nuclear steam supply system, with modifications and design changes to the extent that this is considered to be a V213, in pressure containment structures with Westinghouse ice condensers have been operating since 1977 at Loviisa, Finland. Two improved model V213s, using a containment structure with a pressure dome, are under construction in Cuba. Table A.1 lists all VVER-440s in operation or under construction as of December 31, 1986 [4].

A 1000 MWe version of the VVER, the VVER-1000, is now the only version manufactured inside the USSR. In addition to installations within the USSR, several VVER-1000 units are also under construction and planned in Eastern European countries. Bulgaria recently started the first of two VVER-1000 plants outside of the USSR at Kozloduy [39]. Table A.2 lists the VVER-1000s that were operating or under construction as of December 31, 1986 [2]. The design of the VVER-1000, which differs considerably from the VVER-440, is briefly compared to the VVER-440 in succeeding sections.

The Cuban type VVER-440 plant is the current standardized 440 design that is, along with the VVER-1000, available for export through Atomenergoexport. However, the VVER-440 plants currently in operation or under construction in Eastern bloc countries are not the Cuban type VVER-440. Interatomenergo, an international organization located in Moscow and composed of the USSR, Cuba, Czechoslovakia, Bulgaria, Hungary, Poland, Romania, the German Democratic Republic, and Yugoslavia, coordinates production and design of VVERs within countries belonging to the Council for Mutual Economic Assistance (CMEA) and is responsible for VVERs built outside the USSR since 1985. Through this organization, the country purchasing VVERs is able to make changes in the plant standard design, in areas other than the nuclear steam supply system (NSSS) and safety system, as a result of local conditions and judgments. [4]

For example, at the Zarnowiec units, in Poland, each unit will have only one steam turbine. At the Loviisa plants, the Finns (Finland is not a member of CMEA) made significant changes during construction (in this instance the changes extended to safety-related components) [8,20].

Eastern European countries provide a substantial and increasing amount of equipment and components for VVERs. Czechoslovakia, for example, produces equipment for both VVER-440s and VVER-1000s and can produce, at its key factories located in the Skoda Works, Vitkovcke Zelezarny, and Sigma, over 80% of the equipment required to build a VVER-440. There are indications that Czechoslovakian components will be incorporated in the Cuban VVER-440s. The two Cuban V213 vessels were manufactured at the Izhora Nuclear Components Production Plant at Kolpino, USSR. Significant amounts of locally produced equipment and services are ordinarily used when VVERs are constructed under an Interatomenergo arrangement in Eastern Europe. No data were available regarding the degree of Cuban participation.

In contrast to equipment manufacturing, the VVER fuel cycle is handled entirely by the Soviet Union, which provides uranium enrichment services, fabrication of fuel, and storage and reprocessing of spent fuel. Although spent fuel is stored at the plant site for an interim period, all spent fuel is to be eventually returned to the Soviet Union for final disposal [4].

Table A.1. VVER-440s in Operation or Under Construction as of December 31, 1986

Country and Plant Site	Unit Number	Model	Status
BULGARIA			
Kozloduy	1	V230	Operational (1974)
	2	V230	Operational (1975)
	3	V230	Operational (1980)
	4	V230	Operational (1982)
CUBA			
Juragua	1	V213*	Under Construction
	2	V213*	Under Construction
CZECHOSLOVAKIA			
Bohunice	1	V230	Operational (1978)
	2	V230	Operational (1980)
	3	V213	Operational (1984)
	4	V213	Operational (1985)
Dukovany	1	V213	Operational (1985)
	2	V213	Operational (1986)
	3	V213	Operational (1986)
	4	V213	Under Construction
Mochovce	1	V213	Under Construction
	2	V213	Under Construction
	3	V213	Under Construction
	4	V213	Under Construction
FINLAND			
Loviisa	1	V213**	Operational (1977)
	2	V213**	Operational (1981)

* Bubbler-condenser towers in domed containment
**Westinghouse ice-condenser containment

Table A.1. VVER-440s in Operation or Under Construction as of December 31, 1986 (Continued)

Country and Plant Site	Unit Number	Model	Status
EAST GERMANY			
Lubmin Nord	1	V230	Operational (1973)
	2	V230	Operational (1975)
	3	V230	Operational (1978)
	4	V230	Operational (1979)
	5	V213	Under Construction
	6	V213	Under Construction
	7	V213	Under Construction
	8	V213	Under Construction
HUNGARY			
Paks	1	V213	Operational (1983)
	2	V213	Operational (1984)
	3	V213	Operational (1986)
	4	V213	Under Construction
POLAND			
Zarnowiec	1	V213	Under Construction
	2	V213	Under Construction
USSR			
Kola	1	V230	Operational (1973)
	2	V230	Operational (1974)
	3	V213	Operational (1982)
	4	V213	Operational (1984)
Armenia	1	V230	Operational (1977)
	2	V230	Operational (1980)
Novovoronezh	3	V230	Operational (1972)
	4	V230	Operational (1973)
Rovno	1	V213	Operational (1980)
	2	V213	Operational (1981)

Table A.2. VVER-1000s in Operation, Under Construction, or Planned as of December 31, 1986

Country and Plant Site	Unit Number	Status
BULGARIA		
Kozloduy	5	Under Construction
	6	Under Construction
Belene	1	Planned
	2	Planned
	3	Planned
	4	Planned
CZECHOSLOVAKIA		
Temelin	1	Under Construction
	2	Planned
	3	Planned
	4	Planned
EAST GERMANY		
Stendal	1	Planned
	2	Planned
HUNGARY		
Paks	5	Planned
	6	Planned
POLAND		
Kujawy	1	Planned
	2	Planned
USSR		
Novovoronezh	5	Operational (1981)
Rovno	1	Operational (1982)
	2	Operational (1982)
	3	Operational (1986)
	4	Under Construction
South Ukraine	1	Operational (1984)
	2	Operational (1984)
	3	Under Construction
	4	Under Construction
Kalinin	1	Operational (1984)
	2	Operational (1986)
	3	Planned
	4	Planned
Bashkir	1	Under Construction
	2	Under Construction
	3	Planned
	4	Planned

Table A.2. VVER-1000s in Operation, Under Construction, or Planned as of December 31, 1986 (Continued)

Country and Plant Site	Unit Number	Status
USSR		
Zaporozhye	1	Operational (1984)
	2	Operational (1985)
	3	Under Construction
	4	Under Construction
	5	Under Construction
	6	Under Construction
Khmel'nitsky	1	Operational (1985)
	2	Under Construction
	3	Under Construction
	4	Planned
Balakova	1	Operational (1986)
	2	Under Construction
	3	Under Construction
	4	Under Construction
	5	Planned
	6	Planned
Crimean	1	Under Construction
	2	Under Construction
Rostov	1	Under Construction
	2	Under Construction
	3	Under Construction
	4	Under Construction
Tatar	1	Under Construction
	2	Planned
	3	Planned
	4	Planned
	5	Planned
	6	Planned
Odessa ATETS*	1	Under Construction
	2	Under Construction
Minska ATETS*	1	Under Construction
	2	Under Construction
Kharkov ATETS*	1	Planned
	2	Planned
Volgograd ATETS*	1	Planned
	2	Planned

Other sites in the USSR and Eastern Europe are currently being evaluated.
* Nuclear power station producing both heating and electricity.

APPENDIX B

Loviisa Ice-Condenser Containment

B.1 Containment Design

The two V213 units at Loviisa, Finland, about 100 km (62 mi) east of Helsinki, were constructed in 1977 and 1981 using containments equipped with ice-condensers built under license from Westinghouse (see Figure B.1). Main instrumentation and the plant protection system were delivered by Siemens-KWU of West Germany (see Figure B.2). Contrary to the typical ice-condenser containments, the free volume of 57,000 m^3 (2.0×10^6 ft^3) corresponds to that of a large dry containment (Table B.1) [16].

Table B.1. Design Features of Loviisa Ice-Condenser Containment [16]

Total Free Volume, m^3	57,000
Design Pressure, MPa	0.17×10^6
Ice Mass, design minimum, tonne	837
Spray Systems, trains	4
Maximum Spray Capacity, kg/sec	2 x 250

The reactor cavity has open ducts to the containment sumps, so that once water accumulates to a depth of about 20 cm (0.6 ft), water can flow to the reactor cavity. The ice in the condenser has been predicted by Imatran Voima Oy (IVO) to melt in all severe accident sequences and fill the reactor cavity (excluding some containment by-pass sequences). Basemat melt-through has thus been said to be prevented.

The structural pressure capability of the containment against a gross failure is 3.25 bar (47 psig), but it has been computed to be leaktight only to a pressure of 2 bar (29 psig). The secondary containment concrete walls are 0.6 m (2 ft) thick but there is no concrete roof. Consequently, skyshine must be considered when planning mitigating measures on site.

The set of design basis accidents (DBAs) for the V213 includes breaks of primary circuit boundaries up to the double-ended guillotine break of a main coolant pipe, a spectrum of steam line and feed line breaks, and anticipated transients without scram (ATWS). The Finns tended to follow the U.S. standards closely and had access to a wide spectrum of computers and computer codes.

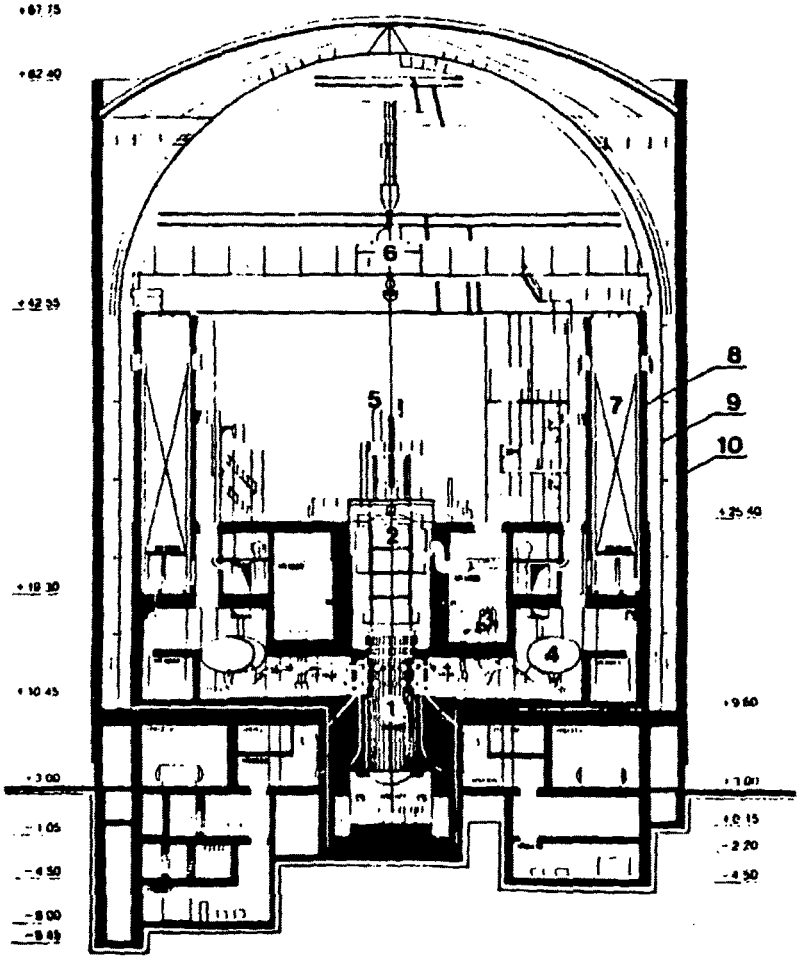

1-Reactor vessel; 2-Control rod drives; 3-Pump; 4-Steam generator; 5-Refueling machine; 6-Polar crane; 7-Ice condenser; 8-Inner concrete wall; 9-Steel containment; 10-Outer concrete wall.

Figure B.1. Loviisa Ice-Condenser Containment

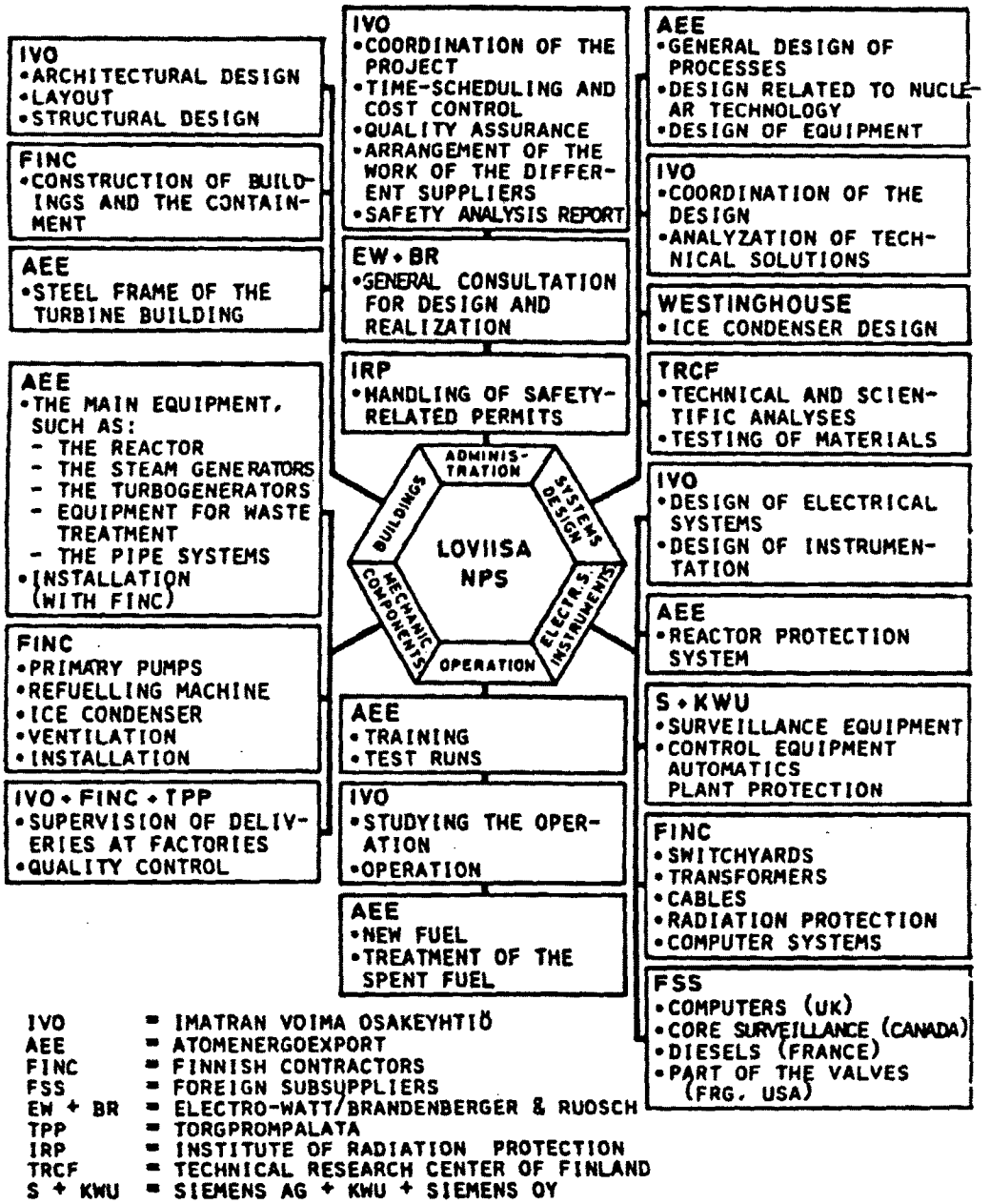

Figure B.2. Organizations That Participated in Construction of Loviisa [40]

Table B.2, furnished by B. Regnell of Loviisa [41], illustrates safety analyses originally performed for the Loviisa plants by the Russian suppliers. The list is extensive and based upon the list contained in the U.S. standard format for safety reports and an IAEA guide on the same subject. The Finns reported that they reanalyzed some of these events (e.g., large- and small-break LOCAs, steam line break) using U.S. NRC computer codes and assuming more stringent conditions. For example, the Soviets had assumed a break of 25 cm (10 in) pipe for large-break LOCA analysis, whereas the Finns considered a double-ended guillotine break of a 50 cm (20 in) diameter reactor coolant system pipe. It is worth noting that the Finns often found the Soviet analyses to be more conservative than theirs.

The Finns added analyses of ATWS cases and collector break analysis. The latter was added because of the unique design of the steam generator; the horizontal tube bundle tips are attached to two 75 cm (30 in) vertical pipes, called collectors, which are inside the steam generator and are connected to the hot and cold leg of the respective loop. A complete guillotine break of a collector, which presents a direct primary-to-secondary leak path, is assumed in the analysis (this is similar to a very large Steam Generator Tube Rupture). The Finns are currently preparing the LOFSAR, the final safety report for Loviisa.

B.2 Accident Mitigation Features

B.2.1 Ice-Condenser

The ice-condensers at Loviisa serve a function similar to that of a typical bubbler-condenser (see Section 3.2.3). Since the plant layout differs from that of typical Westinghouse PWRs, plant-specific analysis is necessary to quantify the plant response.

The operating principle of the ice-condenser is such that if a coolant pipe breaks in the lower compartment and steam and water are released, the increase in lower compartment pressure pushes steam and air through the lower ice-condenser inlet doors, through the ice-condenser, and through the outlet doors into the upper compartment. The steam partial pressure has been computed by Westinghouse to be rapidly reduced and nearly all of the steam to be condensed. For the most severe DBA loss-of-coolant accident (LOCA) condition, the maximum upper compartment pressure has been computed to be approximately 69 kPa (10 psig) and to drop below 1.4 kPa (2 psig) within several minutes. [11]

B.2.2 Hydrogen Control

The Finnish authorities installed a hydrogen igniter system in Loviisa in 1982. The igniter system consists of about 70 glow plug type igniters which are divided in two separate independent groups. Igniters are located in every separate room in the containment where hydrogen accumulation can be expected, in order to avoid buildup of high local hydrogen concentrations and uncontrolled burning.

B.2.3 Others

Finnish analysts concluded, however, that severe accident sequences caused by total station blackout or loss of recirculation due to the containment sump clogging cannot be mitigated with existing systems. Special analytical and experimental studies were therefore undertaken to address these problems. On this basis it was recommended that a separate overpressure protection should be designed that would be independent of the station AC power distribution and the containment sump performance. In addition, it was determined that the Loviisa containment must not be filled with extra sprays without adequate water outlet flow capability, since the containment base could not tolerate high hydrostatic pressure. [22]

The results of studies performed by IVO are briefly summarized in Chapter 7.

Table B.2. Design Basis Accidents for Loviisa [41]

14.1	Uncontrolled Control Rod Withdrawal from a Subcritical Condition
14.2	Uncontrolled Control Rod Withdrawal at Power
14.3	Disturbances in the Chemical Control and Primary Circuit Volume Compensation System
14.4	Complete and Partial Loss of Forced Reactor Coolant Flow with a Single Reactor Coolant Pump Locked Rotor
14.4.1	Loss of Reactor Coolant Flow Including Wedging of One Primary Circulating Pump
14.4.2	Thermohydraulic Calculations Regarding the Functioning of the Equipment during Disturbance States. Calculations Regarding Transient States in Coolant Flow in the Reactor Core. 213-TP-570
14.5	Connection of One Primary Circuit Loop Not in Service to the Reactor
14.6	Loss of External Electrical Load
14.7	Loss of Normal Feedwater (Failure in Feedwater Pump)
14.8	Loss of All AC Power to the Station Auxiliaries (Station Blackout)
14.9	Excessive Heat Removal due to Feedwater System Malfunctions

Table B.2. Design Basis Accidents for Loviisa (Continued)

14.10	Excessive Load Increase Including That Resulting from a Pressure Regulator Failure or Inadvertent Opening of a Relief Valve or Safety Valve
14.11	Loss of Reactor Coolant, from Small- or Medium-Sized Ruptured Pipes or from Instrument Lines, Which May Actuate Emergency Core Cooling
14.11.1	Thermohydraulic Calculations of Accident Situations; 213-TP-571, Part 6 Calculations of the Parameters of the Primary Circuit Coolant as the Connecting Pipes Between the Emergency Water Tank and the Reactor, the Pressurizer, and the Primary Circuit Break
14.11.2	Thermohydraulic Calculations of Accident Situation; 213-TP-571, Part 7 Calculations Regarding the Parameters of the Primary Circuit in Connection with Breaks of Pipes Having a Maximum Nominal Diameter of 135 mm
14.11.3	Calculations Regarding Temperature Conditions in the Reactor Core in Connection with Pipes Having a Maximum Nominal Diameter of 250 mm, 231-TP-595
14.12.a	Liquid Waste Handling Accident
14.12.b	Gaseous Waste Handling Accident
14.12.b1	Addition to 12.b Gaseous Waste Handling Accident
14.13	Steam Generator Tube Rupture
14.14	Rod Ejection Accident
14.15	Rod Drop Accident
14.16	Steam Line Breaks
14.17	Major Rupture of Pipes Containing Reactor Coolant Up to and Including Double-Ended Rupture of the Largest Pipe in the Reactor Coolant System (Loss-of-Coolant Accident)
14.17.1	Reactor Plant: Thermophysical Calculations; 213-TP-589 Calculations Regarding the Gas Pressure in Fuel Rod Wrappers at Different Stages of the Burnout Cycle

Table B.2. Design Basis Accidents for Loviisa (Continued)

14.17.2	Leakage of Activity from Fuel Rods in Connection with Pipe Breaks 213-P-596
14.17.3	Thermohydraulic Calculations of Accident Situations; 213-TP-571, Part 1 Changes in the Parameters of the Primary Circuit Coolant in Connection with a Primary Circulating Pipe Break
14.17.4	Thermohydraulic Calculations of Accident Situations; 213-TP-571, Part 2 Calculations of the Temperature of Fuel Rods in the Reactor Core in Connection with a Primary Circulating Pipe Break
14.17.5	Thermohydraulic Calculations of Accident Situations; 213-TP-571, Part 3 Calculations of the Pressure Difference Acting on Reactor Internals in Connection with a Primary Circulating Pipe Break
14.17.6	Thermohydraulic Calculations of Accident Situations; 213-TP-571, Part 4 Calculations of the Pressure Difference Acting on Reactor Internals in Connection with a Primary Circulating Pipe Break
14.17.7	Thermohydraulic Calculations of Accident Situations; 213-TP-571, Part 5 Calculations Regarding the Spray Paths of Coolant Fed from the Emergency Cooling System into the Reactor
14.17.8	Thermohydraulic Calculations of Accident Situations; 213-TP-571, Part 9
14.17.9	Environmental Doses in Connection with the DBA
14.18	Fuel Handling Accident; 213-H-576
14.19	Inadvertent Criticality
14.20	Failure of Residual Heat Removal (in Normal Operation and Accident)
14.21	Malfunction of Spent Fuel Storage Cooling System
14.22	Hydrogen Generation in Containment
14.22.1	Addition 22.1 Accumulation of Hydrogen Inside the Containment of Lo.1 Nuclear Power Station after the Biggest Design Basis Accident

APPENDIX C

VVER-440 Seismic Considerations

The potential for severe damage due to a major earthquake is a serious consideration in Eastern Europe and the western Soviet Union where most VVERs are located (see Figure C.1). Although the first seismic requirements were issued in 1971, seismic loading had received little attention in the actual design and siting of the VVERs prior to the adoption of a "temporary" set of criteria in 1979. These temporary criteria were issued in response to a severe earthquake in 1977 (registering VIII on the MSK-64* scale) at Vrancea, Romania, about 300 km from the Kozloduy nuclear power plant in Bulgaria.

Before the 1977 Vrancea earthquake, the practical application of seismic criteria in the Soviet Union simply prohibited the construction of nuclear power plants in regions of seismic activity greater than five points of the MSK-64 scale. There were no special provisions in the design criteria of the structures or in the design or installation of equipment for seismic loading; standard building practices were used according to other criteria. The additional loads produced by an earthquake were regarded as sufficiently small to be adequately included in the usual design safety margins.

The seismicity of the specific site was considered in the design of the plant and equipment for the V213s and VVER-1000s. However, the rule prohibiting construction in zones of intensity greater than five was not strictly adhered to. There are older V230s whose construction predates the application of the seismic criteria, which are located at sites where the potential for earthquakes is in excess of the seismic capability, notably Kozloduy Units 1 and 2 (intensity eight) in Bulgaria, Armenia Unit 1 (intensity eight) in Soviet Union, and the Bohunice Unit 1 (intensity six) in Czechoslovakia.

Cuban V213s are reportedly designed for safe shutdown earthquake of 8 on an MM scale* and operational basis earthquake of 6 on an MM scale.

---

* The MSK-64 scale discussed in this section subjectively measures intensity of ground shaking and is a convenient measure of observed effects on structures and people. It is not, however, directly convertible to the Richter scale. Level VIII on the MSK-64 scale, for example, is defined as (1) steering of motor cars affected, (2) damage to masonry built by ordinary workmanship and mortar, (3) partial collapse, e.g., twisting, fall of chimneys, factory stacks, monuments, towers, elevated tanks, etc.

The Modified Mercalli (MM) scale can be converted to MSK-64 one-to-one, i.e., 8 on the MSK scale translates to 8 on the MM scale.

Safety Significance

There has been no retrofitting requirement for those plants that had already been built in seismically unstable areas with one exception (Armenia Unit 1). Furthermore, seismic analyses have not been made available for any of the VVER series. It appears that there are several VVER plants in operation whose design criteria were less than the local expected maximum earthquake loading. In addition, the nondeterministic and subjective MSK scale in use in the Soviet Union does not lend itself to quantitative evaluation of either design or risk.

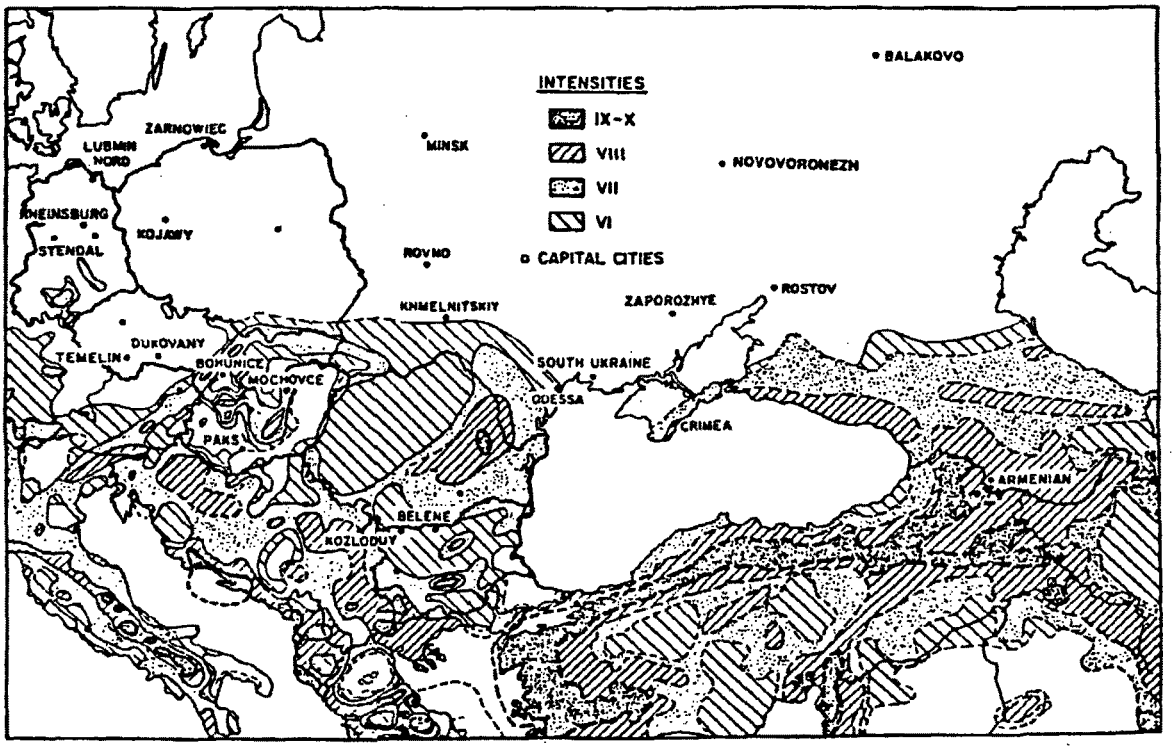

Figure C.1. Seismic Zoning Map and Locations of VVER-440s and VVER-1000s [4]

APPENDIX D

VVER-440 Radiation Monitoring

Cuban Plants [2,3]

All aspects of radiation monitoring are being incorporated into plant and site design and procedures. Site monitoring includes 25 sampling stations located throughout a 25 km (16 mi) zone, incorporating offshore monitoring via ship. Measurements will include air samples, rain samples, and gamma dose and gamma dose rate measurements. Environmental monitoring includes the monitoring of wells, surface water, agriculture, and animals. Laboratories for radiochemical analysis will be outside the 2.5 km (1.6 mi) zone. The program will commence a year or so before plant startup to establish background levels.

Only long-lived radionuclides are expected to be released during normal operation, and the Soviets claim that the major source of radionuclides will be from fission products, not activation of contaminants. The integrated dose at a nearby city is estimated at 27 person-rem/year.

Soviet General Practice

The State Committee on Radiation Protection, established in 1965 by the Ministry of Health, issued both of the documents (RSS-76 and SP-AES-79) governing dose limits and radiation protection. RSS-76 established a system of dose limits based on recommendations of the International Commission on Radiological Protection. SP-AES-79 expands on RSS-76 and provides requirements for siting of nuclear power plants, layout, shielding, and sanitary and dosimetric monitoring. In addition, SP-AES-79 sets dose limits for plant personnel, the local population, and individual limits for both radioactive and thermal waste. [4]

SP-AES-79 contains dose limits for the maximum doses resulting from the radioactive aerosol releases and liquid waste for the limited part of the population. [4]

SP-AES-79 requires plants to have a safety system and systems to mitigate the effects of accidents such that the doses to the population in the event of the maximum design failure will not exceed the following limits:

* external whole body $\leq$ 10 rem
* internal thyroid (children) $\leq$ 30 rem
* internal other organs $\leq$ 10 rem

An average plant personnel exposure is 200 person-rem/year. [2,3]

APPENDIX E

USSR Standards for Siting and Emergency Planning

Siting Standards for Nuclear Heat Supply Stations

The following data are given for a nuclear heat supply station and the cogeneration station. The corresponding data for a nuclear power station were unavailable. However, it is expected that similar, but not necessarily identical, standards would be applied to nuclear power plants and to nuclear heating plants.

(1) Minimum of 2 km (1.2 mi) from predictable near-term city boundary (actual settled area) with possible modification for Arctic cities.

(2) Routine operational dose to the public $\leq$ 20 mrem/yr, exclusive of the thyroid glands for which $\leq$ 60 mrem/yr for children, while integral population dose $\leq 10^4$ person-rem/yr.

(3) Under design basis accident individual dose beyond the station exclusion area $\leq$ 10 rem excluding children's thyroid glands. The integral population dose $\leq 10^5$ person-rem under worst weather conditions.

Emmergency Planning

Since the Chernobyl accident, there have been no changes in emergency planning but improved coordination with the local civil defense has been implemented.

The three emergency planning zones are defined as:

--- Zone 1 is a 3 km (1.86 mi) radius zone in which no non-plant activity is allowed.

--- Zone 2 is the evacuation zone and is 30 km (18.6 mi) in radius. This 30 km (18.6 mi) radius may be expanded to 50 km (31.1 mi). In this zone there is constant monitoring of radioactivity.

--- Zone 3 is referred to as a "free zone." Plans are being made for this zone but nothing is established yet. Presumably this is the Soviet food pathway zone similar to the U.S. 50-mile radius zone.

Criteria for initiating evacuation are:

--- A release of I-131 that would result in 30 rem thyroid in children at 3 km (1.86 mi) or beyond, or

--- If plant conditions are such that a release may result yielding a 250 rem exposure at the site 3 km (1.9 mi) boundary (anticipatory).

NRC FORM 335 (2 84) NRCM 1102, 3201, 3202

U.S. NUCLEAR REGULATORY COMMISSION

BIBLIOGRAPHIC DATA SHEET

SEE INSTRUCTIONS ON THE REVERSE

1. REPORT NUMBER (Assigned by TIDC add Vol. No., if any)

NUREG/CR-5202 (P)
ITS/NRC/88-1

2. TITLE AND SUBTITLE

Soviet Pressurized Water Reactors (VVERs) in Cuba: Comparative Analysis Against a U.S. PWR

3. LEAVE BLANK

4. DATE REPORT COMPLETED

MONTH	YEAR
February	1989

5. AUTHOR(S)

P. B. Abramson and H. Komoriya

6. DATE REPORT ISSUED

MONTH	YEAR
March	1989

7. PERFORMING ORGANIZATION NAME AND MAILING ADDRESS (Include Zip Code)

International Technical Services, Inc.
420 Lexington Avenue
New York, NY 10170

8. PROJECT/TASK/WORK UNIT NUMBER

NRC-04-87-395

9. FIN OR GRANT NUMBER

FIN D-1756

10. SPONSORING ORGANIZATION NAME AND MAILING ADDRESS (Include Zip Code)

Office of Nuclear Regulatory Research
U.S. Nuclear Regulatory Commission
Washington, DC 20555

11a. TYPE OF REPORT

Technical report

b. PERIOD COVERED (Inclusive dates)

12. SUPPLEMENTARY NOTES

13. ABSTRACT (200 words or less)

The features of two Soviet-designed pressurized water reactors, VVER-440 model V213s, currently being constructed in Cuba are reviewed, with particular attention to containment design and plant safety features. The design and safety features of the Cuban V213s are compared to a comparably sized U.S. PWR. The pressure suppression mechanisms of the Cuban V213 bubbler condenser containment system and the overall containment design are compared to those of both U.S. BWRs and PWRs. Similarities and differences in safety characteristics between the Cuban V213s and comparable U.S. plants are noted. Relative strengths and risks are discussed. The study was based upon limited information; the inferences must be viewed as tentative.

14. DOCUMENT ANALYSIS - a. KEYWORDS/DESCRIPTORS

VVER, Soviet reactors, Cuba, Cuban nuclear power plants

b. IDENTIFIERS/OPEN-ENDED TERMS

REMOVED FROM SENSITIVE UNCLASSIFIED INFORMATION CATEGORY ON JULY 10, 1995 PER KRISTEN SUOKKO, ASSOCIATE DIRECTOR, INTERNATIONAL NUCLEAR SAFETY, OFFICE OF NUCLEAR ENERGY, SCIENCE, AND TECHNOLOGY, U.S. DEPARTMENT OF ENERGY.
JULY 10, 1995

15. AVAILABILITY STATEMENT

[redacted]

16. SECURITY CLASSIFICATION

(This page)

(This report)

[redacted]

17. NUMBER OF PAGES

18. PRICE

UNITED STATES
NUCLEAR REGULATORY COMMISSION
WASHINGTON, D.C. 20555

OFFICIAL BUSINESS
PENALTY FOR PRIVATE USE, $300

SPECIAL FOURTH-CLASS RATE
POSTAGE & FEES PAID
USNRC
PERMIT No. G-67